www.CarGeek.ir

GROUP 00

GENERAL

CONTENTS

HOW TO USE THIS MANUAL. 00-3

HOW TO USE TROUBLESHOOTING/ INSPECTION SERVICE POINTS. . . . 00-6

- CONTENTS OF TROUBLESHOOTING . . . 00-6
- DIAGNOSIS FUNCTION. 00-8
- HOW TO USE THE INSPECTION PROCEDURES 00-10
- CONNECTOR MEASUREMENT SERVICE POINTS 00-12
- CONNECTOR INSPECTION SERVICE POINTS 00-13
- INSPECTION SERVICE POINTS FOR A BLOWN FUSE. 00-14
- HOW TO COPE WITH INTERMITTENT MALFUNCTIONS 00-14
- HOW TO TREAT PAST TROUBLE 00-15

VEHICLE IDENTIFICATION 00-15

- MODELS <LANCER> 00-15
- MODELS <LANCER SPORTBACK> 00-18
- VEHICLE IDENTIFICATION NUMBER (CHASSIS NUMBER) 00-20
- VEHICLE INFORMATION CODE PLATE. . 00-21
- MANUFACTURER PLATE 00-21
- VEHICLE IDENTIFICATION NUMBER (VIN) PLATE 00-21
- ENGINE MODEL STAMPING. 00-22

GENERAL DATA AND SPECIFICATIONS 00-23

- GENERAL DATA AND SPECIFICATIONS <LANCER> 00-23
- GENERAL DATA AND SPECIFICATIONS <LANCER SPORTBACK> 00-32

PRECAUTIONS BEFORE SERVICE. 00-39

- CAUTIONS FOR WORKING IN ENGINE COMPARTMENT <4B11-Turbo, 4N1> 00-39
- CAUTIONS FOR AIR CONDITIONER STARITING 00-39
- SUPPLEMENTAL RESTRAINT SYSTEM (SRS) 00-40
- SERVICING ELECTRICAL SYSTEM 00-40
- HOW TO SHIFT LOCK FORCED RELEASE 00-40
- MULTI USE TESTER (M.U.T.-III) SUB ASSEMBLY 00-42
- HOW TO PERFORM CHASSIS NUMBER (Chassis No.) WRITING 00-43
- CODING LIST 00-49
- PRE-INSPECTION CONDITION. 00-58
- ENGINE OILS 00-58
- INITIALISATION PROCEDURE FOR LEARNING VALUE IN MPI ENGINE 00-58
- LEARNING PROCEDURE FOR IDLING IN MPI ENGINE. 00-59
- SERVICING COMMON RAIL ENGINE <4N1> 00-60
- WHAT THE COMMON RAIL ENGINE LEARNS <4N1> 00-60
- INJECTOR IDENTIFICATION CODE REGISTRATION PROCEDURE <4N1> 00-61
- SMALL INJECTION QUANTITY LEARNING PROCEDURE <4N1> 00-63
- SUPPLY PUMP CORRECTION LEARNING PROCEDURE <4N1> 00-65
- INITIALISATION PROCEDURE FOR LEARNING VALUE IN COMMON RAIL ENGINE <4N1> 00-67
- BATTERY CURRENT SENSOR CALIBRATION <Low CO2 specification, FFV, 4N1, 4J1> 00-68
- FORCED LEARNING OF ESTIMATED ETHANOL CONCENTRATION <FFV> 00-69
- TIMING CHAIN MAINTENANCE <4B11-Turbo> 00-70
- FORM-IN-PLACE GASKET (FIPG). 00-74

www.cargeek.ir

www.CarGeek.ir

BOLTS AND NUTS WITH STABILIZER FOR COEFFICIENT OF FRICTION 00-74
PRECAUTIONS FOR INSTALLATION OF ON-VEHICLE RADIO TRANSMISSION EQUIPMENT 00-75
APPLICATION OF ANTI-CORROSION AGENTS AND UNDERCOATS. 00-75
VEHICLE WASHING. 00-75

SUPPLEMENTAL RESTRAINT SYSTEM (SRS) 00-76

SRS SERVICE PRECAUTIONS 00-79

SUPPORT LOCATIONS FOR LIFTING AND JACKING 00-81

www.cargeek.ir

www.cargeek.ir

www.CarGeek.ir

HOW TO USE THIS MANUAL

M1001000103324

SCOPE OF MAINTENANCE, REPAIR AND SERVICING EXPLANATIONS

This manual provides explanations, etc. concerning procedures for the inspection, maintenance, repair and servicing of the subject model. Note, however, that for engine and transmission-related component parts, this manual covers only on-vehicle inspections, adjustments, and the removal and installation procedures for major components. For detailed information concerning the inspection, checking, adjustment, disassembly and reassembly of the engine, transmission and major components after they have been removed from the vehicle, please refer to separate manuals covering the engine and the transmission.

ON-VEHICLE SERVICE

"On-vehicle Service" is procedures for performing inspections and adjustments of particularly important locations with regard to the construction and for maintenance and servicing, but other inspection (for looseness, play, cracking, damage, etc.) must also be performed.

INSPECTION

Under this title are presented inspection and checking procedures to be performed by using special tools and measuring instruments and by feeling, but, for actual maintenance and servicing procedures, visual inspections should always be performed as well.

DEFINITION OF TERMS

STANDARD VALUE

Indicates the value used as the standard for judging the quality of a part or assembly on inspection or the value to which the part or assembly is corrected and adjusted. It is given by tolerance.

LIMIT

Shows the standard for judging the quality of a part or assembly on inspection and means the maximum or minimum value within which the part or assembly must be kept functionally or in strength. It is a value established outside the range of standard value.

REFERENCE VALUE

Indicates the adjustment value prior to starting the work (presented in order to facilitate assembly and adjustment procedures, and so they can be completed in a shorter time).

DANGER, WARNING, AND CAUTION

DANGER, WARNING, and CAUTION call special attention to a necessary action or to an action that must be avoided. The differences among DANGER, WARNING, and CAUTION are as follows:

- If a DANGER is not followed, the result is severe bodily harm or even death.
- If a WARNING is not followed, the result could be bodily injury.
- If a CAUTION is not followed, the result could be damage to the vehicle, vehicle components or service equipment.

TIGHTENING TORQUE INDICATION

Tightening torques (units: N·m) are set to take into account the central value and the allowable tolerance. The central value is the target value, and the allowable tolerance provides the checking range for tightening torques. If bolts and nuts are not provided with tightening torques.

MODEL INDICATIONS

The following abbreviations are used in this manual for identification of model types.

1500:Indicates models equipped with the 1,499 mL <4A91> petrol engine.
1600:Indicates models equipped with the 1,590 mL <4A92> petrol engine.
1800 (Petrol engine):Indicates models equipped with the 1,798 mL <4B10> petrol engine.
1800 (Diesel engine):Indicates models equipped with the 1,798 mL <4N13> diesel engine.
1800:Indicates models equipped with the 1,798 mL <4B10> petrol engine and 1,798 mL <4N13> diesel engine.
2000:Indicates models equipped with the 1,998 mL <4B11> petrol engine.
DOHC:Indicates an engine with the double overhead camshaft, or models equipped with such an engine.
MIVEC:Indicates the Mitsubishi innovative valve timing electronic control system.
AS&G: Indicates the Auto Stop and Go system.
FFV: Indicates the Flexible Fuel Vehicle.
Clear Tec:Indicates the make CO_2 emission clear technology.
MPI:Indicates the multipoint injection, or engine equipped with the multipoint injection.
M/T:Indicates the manual transmission.
CVT:Indicates the continuously variable transmission.

www.cargeek.ir

www.CarGeek.ir

TC-SST:Indicates the twin clutch sport shift transmission.
2WD:Indicates the 2-wheel drive vehicles.
4WD:Indicates the 4-wheel drive vehicles.
A/C:Indicates the air conditioner.

EXPLANATION OF MANUAL CONTENTS

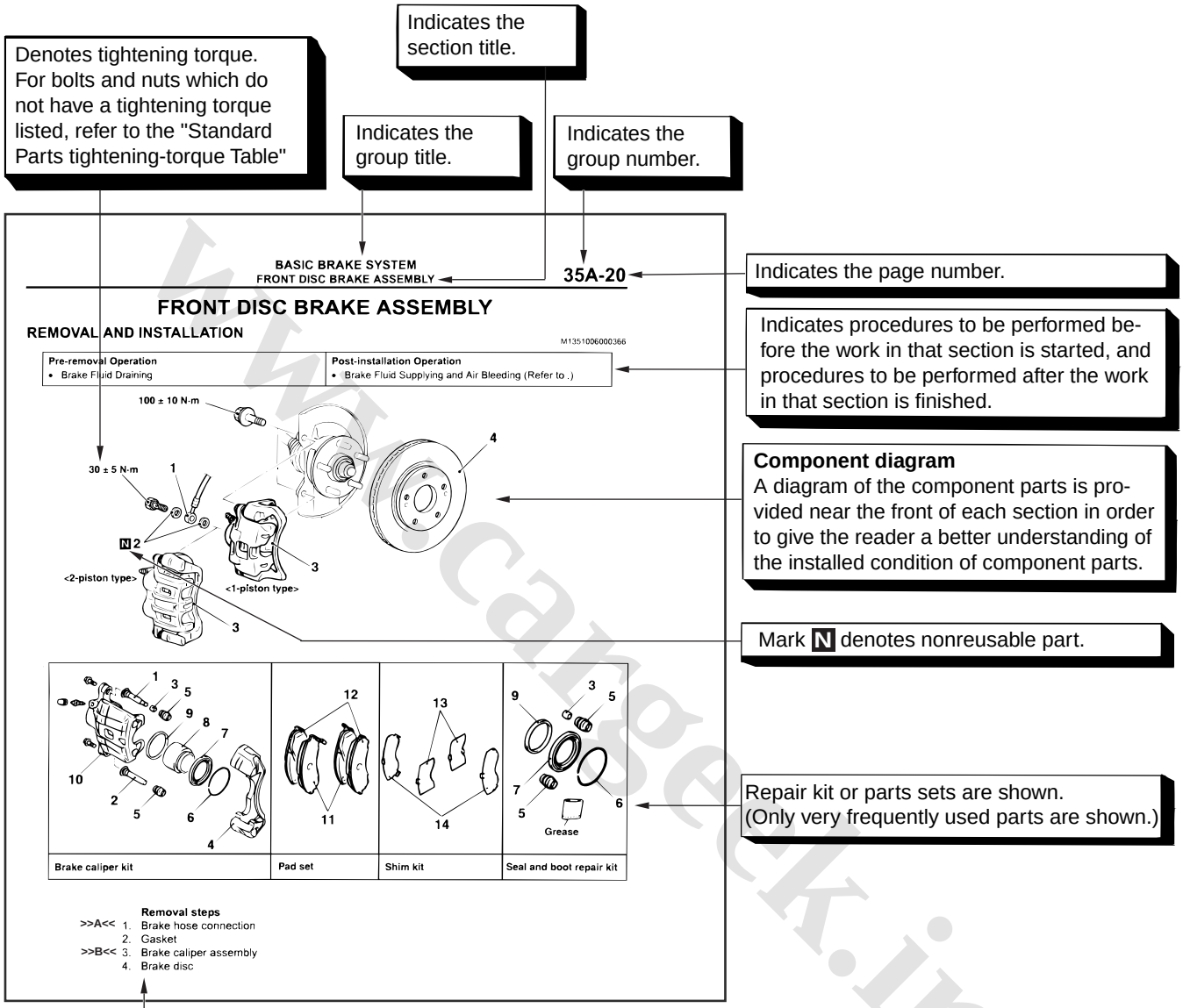

Maintenance and servicing procedures

The numbers provided within the diagram indicate the sequence for maintenance and servicing procedures.

- Removal steps :
  The part designation number corresponds to the number in the illustration to indicate removal steps.
- Disassembly steps :
  The part designation number corresponds to the number in the illustration to indicate disassembly steps.
- Installation steps :
  Specified in case installation is impossible in reverse order of removal steps. Omitted if installation is possible in reverse order of removal steps.
- Reassembly steps :
  Specified in case installation is impossible in reverse order of removal steps. Omitted if reassembly is possible in reverse order of disassembly steps.

AC311238AH

www.cargeek.ir

www.CarGeek.ir

Classifications of major maintenance / service points

When there are major points relative to maintenance and servicing procedures (such as essential maintenance and service points, maintenance and service standard values, information regarding the use of special tools, etc.). These are arranged together as major maintenance and service points and explained in detail.

<<A>> : Indicates that there are essential points for removal or disassembly.
>>A<< : Indicates that there are essential points for installation or reassembly.

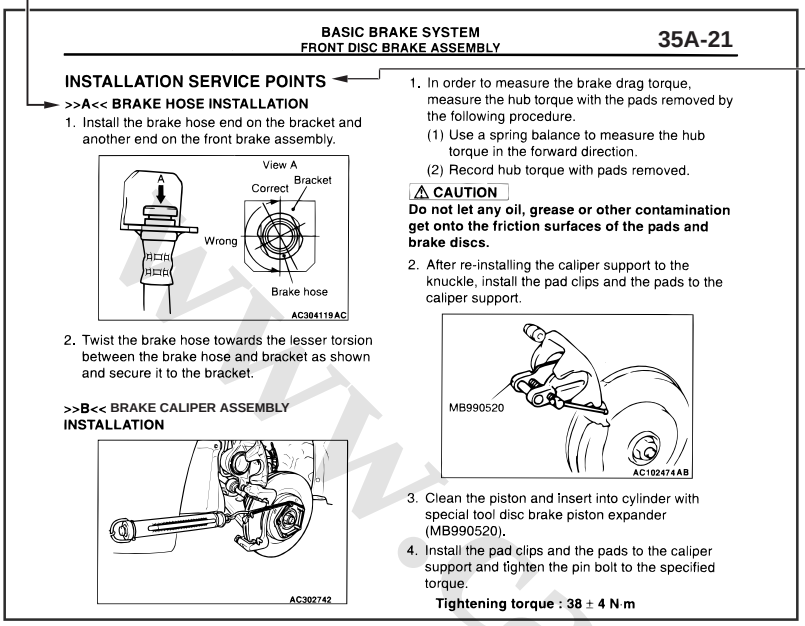
BASIC BRAKE SYSTEM
FRONT DISC BRAKE ASSEMBLY
35A-21

INSTALLATION SERVICE POINTS

>>A<< BRAKE HOSE INSTALLATION

1. Install the brake hose end on the bracket and another end on the front brake assembly.

2. Twist the brake hose towards the lesser torsion between the brake hose and bracket as shown and secure it to the bracket.

>>B<< BRAKE CALIPER ASSEMBLY INSTALLATION

1. In order to measure the brake drag torque, measure the hub torque with the pads removed by the following procedure.
   (1) Use a spring balance to measure the hub torque in the forward direction.
   (2) Record hub torque with pads removed.

CAUTION
Do not let any oil, grease or other contamination get onto the friction surfaces of the pads and brake discs.

2. After re-installing the caliper support to the knuckle, install the pad clips and the pads to the caliper support.

3. Clean the piston and insert into cylinder with special tool disc brake piston expander (MB990520).
4. Install the pad clips and the pads to the caliper support and tighten the pin bolt to the specified torque.
   Tightening torque : 38 ± 4 N·m

Operating procedures, cautions, etc. on removal, installation, disassembly and reassembly are described

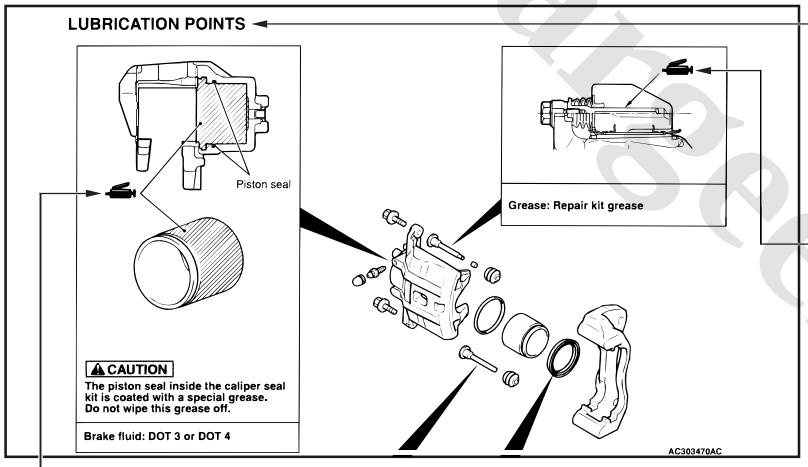

The title of the page (following the page on which the diagram of component parts is presented) indicating the locations of lubrication and sealing procedures.

Indicates (by symbols) where lubrication is necessary.

Symbols for lubrication, sealants and adhesives

Symbols are used to show the locations for lubrication and for application of sealants and adhesives.
These symbols are included in the diagram of component parts or on the page following the component parts page. The symbols do not always have accompanying text to support that symbol.

- : Grease (Multi-purpose grease unless there is a brand or type specified)
- : Sealant or adhesive
- : Automatic transmission fluid, brake fluid, power steering fluid or air conditioning compressor oil
- : Engine oil or gear oil
- : Adhesive tape or butyl rubber tape

AC509265AF

www.cargeek.ir

www.CarGeek.ir

HOW TO USE TROUBLESHOOTING/INSPECTION SERVICE POINTS

CONTENTS OF TROUBLESHOOTING

M1001013300868

⚠ CAUTION

During diagnosis, a diagnosis code associated with other system may be set when the ignition switch is turned on with connector(s) disconnected. On completion, confirm all systems for diagnosis code(s). If diagnosis code(s) are set, erase them all.

⚠ WARNING

Since the radiator fan rotates during CAN bus line diagnostics, make sure that no one is servicing the engine compartment before diagnosing the CAN bus line. Since the CAN communication stops when diagnosing the CAN bus line, the ETACS-ECU detects the time-out of the engine-ECU, and activates the radiator fan to prevent overheating as fail-safe.

Troubleshooting of electronic control systems for which the M.U.T.-III can be used follows the basic outline described below. Even in systems for which the M.U.T.-III cannot be used, some of these systems still follow this outline.

1. STANDARD FLOW OF DIAGNOSIS TROUBLESHOOTING

Troubleshooting sections are based on the diagnostic flow as below. If the diagnostic flow is different from that given below, or if additional explanation is required, the details of such differences or additions will also be listed.

www.cargeek.ir

www.CarGeek.ir

Diagnosis method

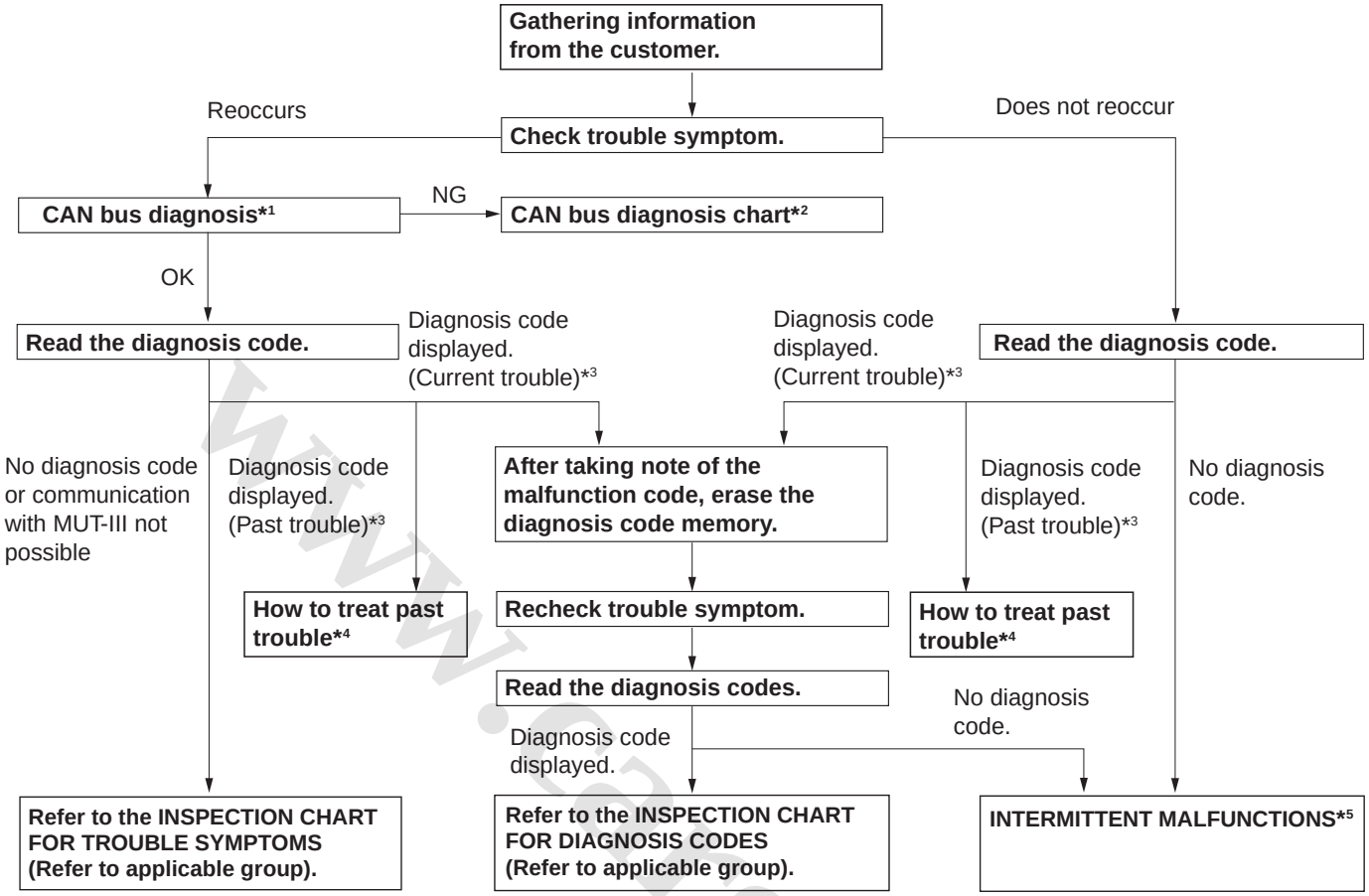

- *1: For how to diagnose CAN bus lines, refer to GROUP 54C .
- *2: For the CAN bus diagnosis chart, refer to GROUP 54C .
- *3: When the M.U.T.-III detects a diagnosis code, its display informs users whether a mechanical problem currently exists or whether it existed before. The message for the former state identifies it as an "Active" and the message for the latter identifies it as a "Stored".
- *4: For how to treat past trouble, refer to P.00-15.
- *5: For how to cope with intermittent malfunctions, refer to P.00-14.

2. SYSTEM OPERATION AND SYMPTOM VERIFICATION TESTS

If verification of the symptom(s) is difficult, procedures for checking operation and verifying symptoms are shown.

3. DIAGNOSIS FUNCTION

Details specific to individual systems are described.

4. DIAGNOSIS CODE CHART

Diagnostic trouble codes and diagnostic items are shown.

5. DIAGNOSIS CODE PROCEDURES

Indicates the inspection procedures corresponding to each diagnosis code (Refer to How to Use Inspection Procedures P.00-10).

6. TROUBLE SYMPTOM CHART

If there are trouble symptoms even though the M.U.T.-III does not find any diagnosis codes, Inspection procedures for each trouble symptom will be found by means of this chart.

www.cargeek.ir

www.CarGeek.ir

7. SYMPTOM PROCEDURES

Indicates the inspection procedures corresponding to each symptom classified in the Symptom Chart (Refer to How to Use Inspection Procedures P.00-10).

8. SERVICE DATA REFERENCE TABLE

Inspection items and normal judgment values have been provided in this chart as reference information.

9. ACTUATOR TEST TABLE

The Actuator Test item numbers, inspection items, and judgment values have been provided in this chart as reference information.

10. CHECK AT ECU TERMINALS

Terminal numbers for the ECU connectors, inspection items, and judgment values have been provided in this chart as reference information.

11. INSPECTION PROCEDURE BY USING AN OSCILLOSCOPE

When there are inspection procedures using an oscilloscope, these are described here.

DIAGNOSIS FUNCTION

M1001013400917

The diagnosis function retrieves diagnosis code and service data by M.U.T.-III and enables the performance of the actuator test.

- DIAGNOSIS CODE
- Data list output
- Actuator test
- Diagnosis deletion using M.U.T.-III
- Freeze frame data
- Status indication by diagnosis code
- ECU information display

NOTE: If a diagnosis code is set, the "status indication by diagnosis code" informs users whether a mechanical problem currently exists (current trouble) or whether it existed before but normal operation has been restored (past trouble).

HOW TO READ DIAGNOSIS CODE

⚠ CAUTION

Before connecting or disconnecting the M.U.T.-III, turn the ignition switch to the "LOCK" (OFF) position.

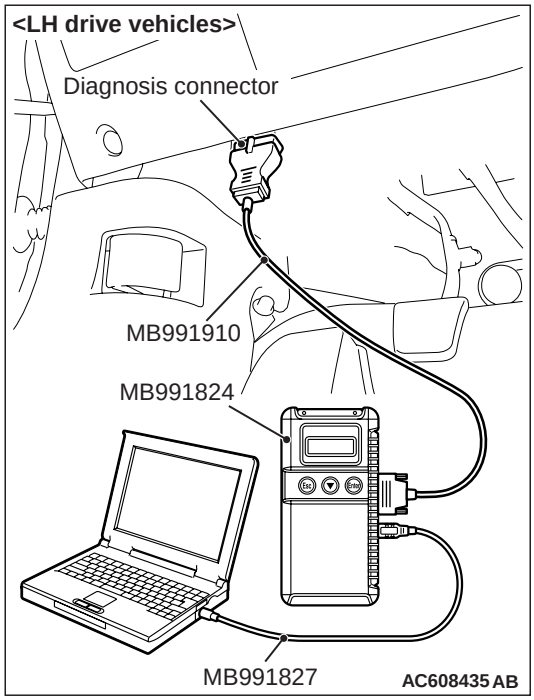

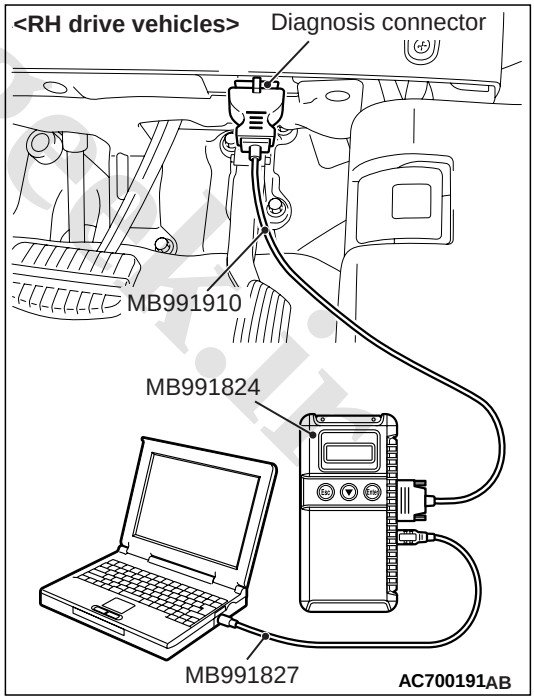

Connect the M.U.T.-III to the 16-pin diagnosis connector, and read the diagnosis code.

www.cargeek.ir

www.CarGeek.ir

NOTE:

- *For details on how to use the M.U.T.-III, refer to the "M.U.T.-III operation manual."*
- *For the vehicles with security alarm sensor, when the M.U.T.-III is connected, if the ignition switch is turned to the "ON" position and the closed hood is opened, the security alarm siren sounds short. This short security alarm siren does not indicate malfunction. Therefore, ignore it and carry out diagnosis using M.U.T.-III.*
- *If the ignition switch is turned to the "ON" position with M.U.T.-III connected to the vehicle, headlamp automatic levelling warning is displayed on the multi-information display in the combination meter. This symptom occurs because the headlamp automatic levelling-ECU enters the diagnosis mode when the M.U.T.-III is connected to the diagnosis connector, and it does not indicate malfunction. Therefore, ignore the indicator display and carry out diagnosis using M.U.T.-III. (When the M.U.T.-III starts communication with the ECU, the indicator display disappears.)*

1. Ensure that the ignition switch is at the "LOCK" (OFF) position.
2. Start up the personal computer.
3. Connect special tool M.U.T.-III USB cable (MB991827) to V.C.I. (MB991824) and the personal computer.
4. Connect special tool M.U.T.-III main harness A (MB991910) to the V.C.I.
5. Connect the M.U.T.-III main harness A to the diagnosis connector of the vehicle.
6. Turn the V.C.I. power switch to the "ON" position.

   NOTE: When the V.C.I. is energized, the V.C.I. indicator lamp will be illuminated in a green colour.
7. Start the M.U.T.-III system on the personal computer and turn the ignition switch to the "ON" position.
8. Read the diagnosis code.

NOTE: When storing the diagnosis code as reference information, the freeze frame data obtains the data when the diagnosis code is confirmed, and then stores the ECU status of that time. By analysing each data using M.U.T.-III, troubleshooting can be carried out efficiently.

9. Disconnecting the M.U.T.-III is the reverse of the connecting sequence, making sure that the ignition switch is at the "LOCK" (OFF) position.

ERASING DIAGNOSIS CODE

⚠ CAUTION

Before connecting or disconnecting the M.U.T.-III, turn the ignition switch to the "LOCK" (OFF) position.

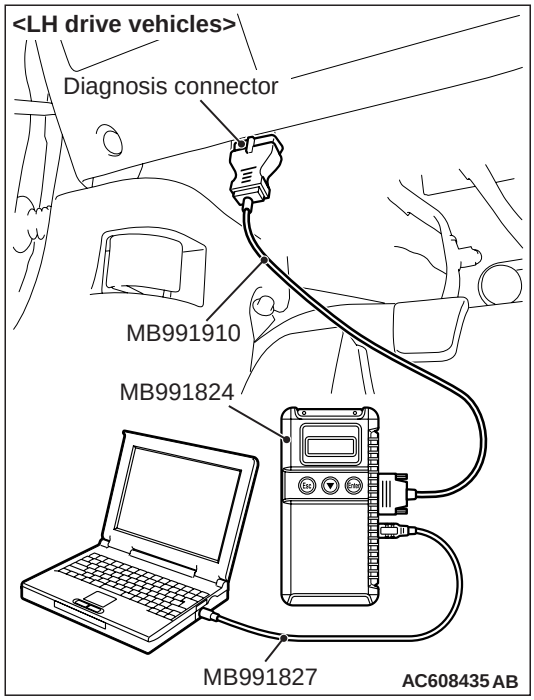

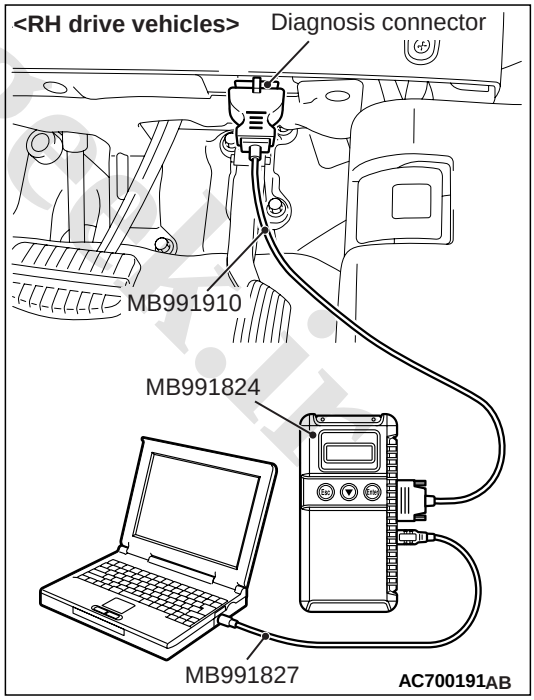

Connect the M.U.T.-III to the diagnosis connector, and erase the diagnosis code. The procedure is the same as "How to Read Diagnosis Code ."

www.cargeek.ir

www.CarGeek.ir

HOW TO USE THE INSPECTION PROCEDURES

M1001013500732

The causes of many of the problems occurring in electric circuitry are generally the connectors, components, the ECU, the wiring harnesses between connectors, in that order. These inspection procedures follow this order. They first try to discover a problem with a connector or a defective component.

Code No. P0100 Air Flow Sensor System

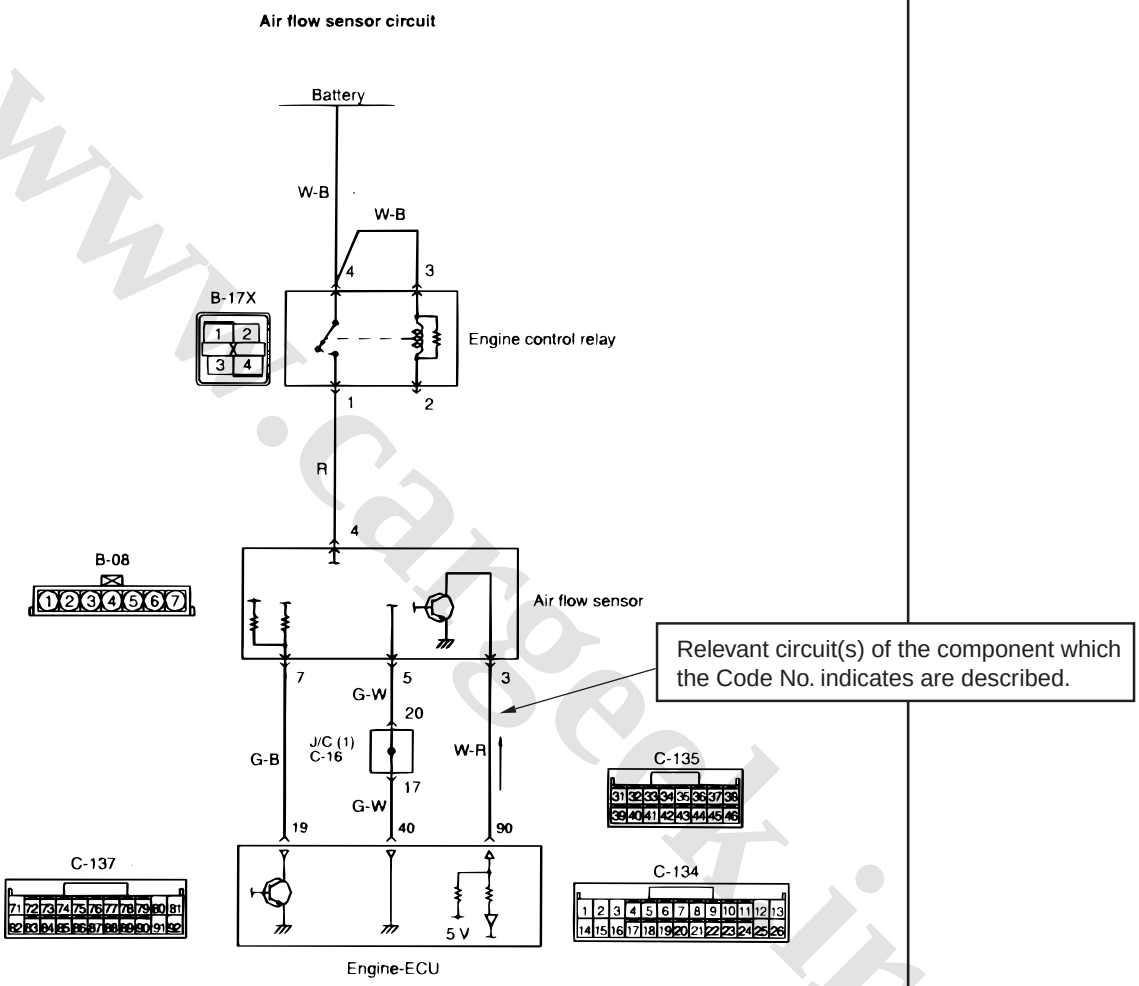

Wire colour code
B: Black LG: Light green G: Green L: Blue W: White Y: Yellow SB: Sky blue BR: Brown O: Orange GR: Grey
R: Red P: Pink V:Violet

AC301964AC

www.cargeek.ir

www.CarGeek.ir

Explains about the basic operation of the components.

Start of diagnosis procedure

Describes inspection procedure.

Explains about technical details.

Describes the conditions for that diagnosis code being set.

Describes possible causes(s) for that diagnosis code.

MULTIPORT FUEL INJECTION (MFI) TROUBLESHOOTING

OPERATION
- Power is supplied to the air flow sensor (terminal No. 4) from the engine control relay (terminal No. 1) and earthed to the engine-ECU (terminal No. 40) from the air flow sensor (terminal No. 5).
- A power voltage of 5 V is applied to the air flow sensor output terminal (terminal No. 3) from the engine-ECU (terminal No. 90).
- An air flow sensor filter reset signal is inputted to the air flow sensor (terminal No. 7) from the engine-ECU (terminal No. 19).

FUNCTION
- Air flow sensor outputs a pulse signal proportional to the intake air flow rate.
- The engine-ECU determines the basic injection timing of the injector using the pulse signal output from the air flow sensor and the engine speed signal.
- When the throttle position sensor output is low, the engine-ECU causes the power transistor in the unit to be ON to send an air flow sensor filter reset signal to the air flow sensor. In response to the reset signal, the air flow sensor resets the filter circuit to improve the ability of the air flow sensor to measure the air flow rate in the area where the intake air flow rate is low.

TROUBLE JUDGMENT

Check Condition
- Engine speed is 500 r/min or more.

Judgment Criterion
- Sensor output frequency of 3.3 Hz or less for 2 seconds.

PROBABLE CAUSE
- Failed air flow sensor
- Open/short circuit in air flow sensor circuit or loose connector contact
- Failed engine-ECU

DIAGNOSIS PROCEDURE

STEP 1. MUT-II data list
- Refer to Data list reference table M1131152000735 P.13A-288.
  a. Item 12: Air flow sensor

Q: Is the check result normal?
YES : Intermittent malfunction (Refer to GROUP 00 – How to Use Troubleshooting/ Inspection Service Points M1001000200429).
NO : Go to Step 2 M1131750100051s2.

STEP 2. Connector check: B-08 air flow sensor connector

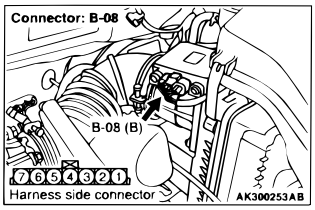

Q: Is the check result normal?
YES : Go to Step 3 M1131750100051s3.
NO : Repair.

AC701738AB

CURRENT TROUBLE

Indicates that the status is "Active" and the trouble is currently present. Carry out troubleshooting as described in the applicable inspection procedure.

PAST TROUBLE

Indicates that the status is "Stored" and the trouble is historic. Since the trouble may still be present, set the vehicle to the diagnosis code detection condition and check that the status changes to "Active". If the status does not change from "Stored", observe the applicable inspection procedure with particular emphasis on connector(s) and wiring harness.

HARNESS CHECK

Check for an open or short circuit in the harness between the terminals which are faulty according to the connector measurements. Carry out this inspection while referring to the Electrical Wiring Manual. Here, "Check the wiring harness between the power supply and terminal xx" also includes checking for blown fuse. For inspection service points when there is a blown fuse, refer to "Inspection Service Points for a Blown Fuse P.00-14."

MEASURES TO TAKE AFTER REPLACING THE ECU

If the trouble symptoms have not disappeared even after replacing the ECU, repeat the inspection procedure from the beginning.

www.cargeek.ir

www.CarGeek.ir

CONNECTOR MEASUREMENT SERVICE POINTS

M1001013600632

⚠ CAUTION

During diagnosis, a diagnosis code associated with other system may be set when the ignition switch is turned on with connector(s) disconnected. On completion, confirm all systems for diagnosis code(s). If diagnosis code(s) are set, erase them all.

Turn the ignition switch to the "LOCK" (OFF) position when connecting and disconnecting the connectors. Turn the ignition switch to "ON" when measuring, unless there are instructions to the contrary.

IF INSPECTING WITH THE CONNECTOR CONNECTED <WATERPROOF CONNECTORS>

⚠ CAUTION

Never insert a test probe from the harness side, as this will reduce the waterproof performance and result in corrosion.

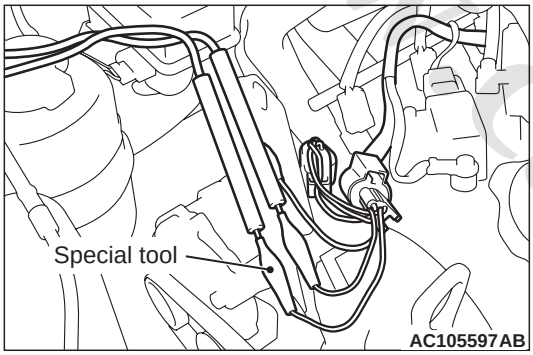

Use the special tools such as test harness, harness connector or check harness.

IF INSPECTING WITH THE CONNECTOR CONNECTED <ORDINARY (NON-WATERPROOF) CONNECTORS>

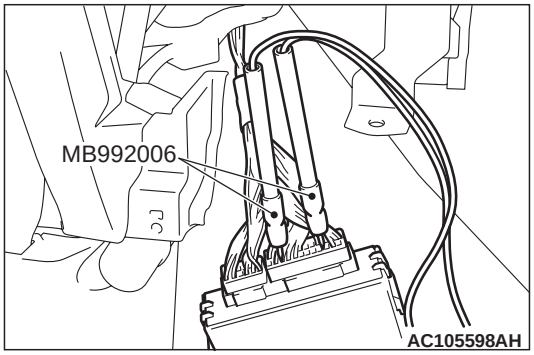

Inspect by inserting a test probe from the harness side. If the connector is too small to insert a test probe (e.g. control unit connector), do not insert it forcibly. Use special tool extra fine probe (MB992006).

IF INSPECTING WITH THE CONNECTOR DISCONNECTED <WHEN INSPECTING A FEMALE PIN>

⚠ CAUTION

- **Use special tool inspection harness (MB991219). If the test bar is inserted forcibly, it will cause a poor contact.**
- **If the connector is disconnected, a diagnosis code may be stored for the system to be checked or other systems.**

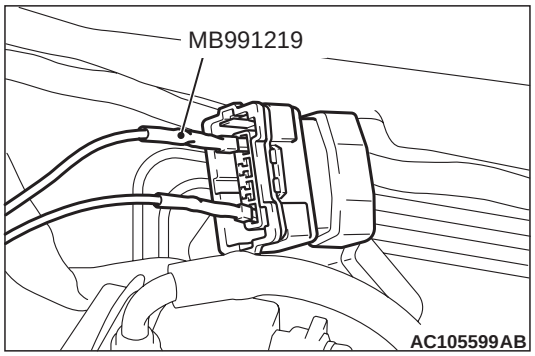

Use inspection harness (MB991219) of special tool harness set (MB991223).

IF INSPECTING WITH THE CONNECTOR DISCONNECTED <WHEN INSPECTING A MALE PIN>

⚠ CAUTION

- **Be careful not to short the connector pins with the test bars. To do so may damage the circuits inside the ECU.**
- **If the connector is disconnected, a diagnosis code may be stored for the system to be checked or other systems.**

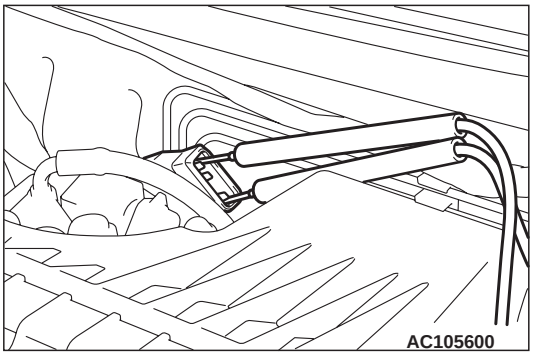

Touch the pin directly with the test bar.

www.cargeek.ir

www.CarGeek.ir

CONNECTOR INSPECTION SERVICE POINTS

M1001013700446

VISUAL INSPECTION

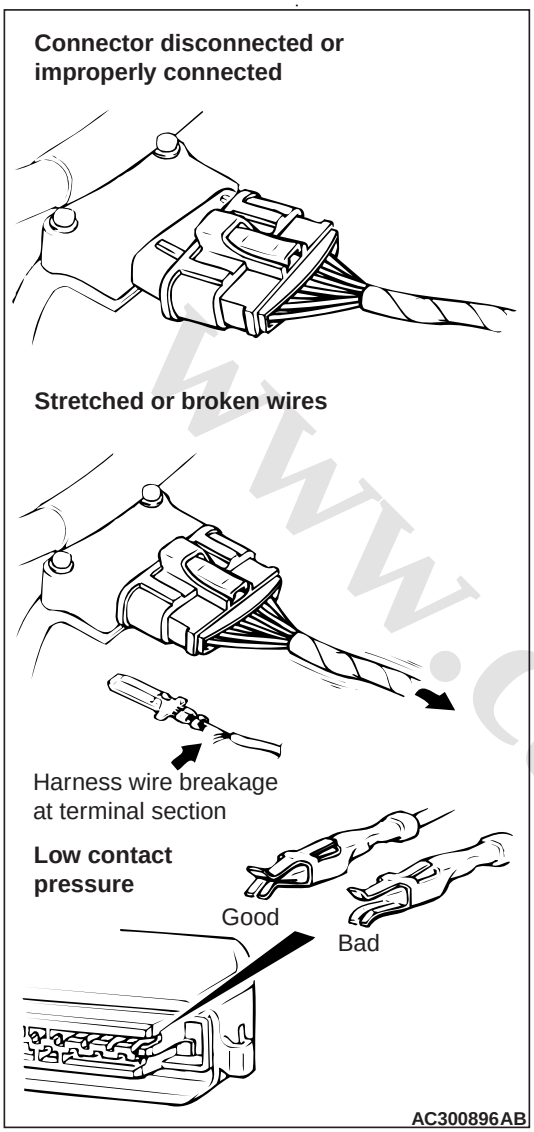

Connector is disconnected or improperly connected

- Connector pins are pulled out
- Due to harness tension at terminal section
- Low contact pressure between male and female terminals
- Low connection pressure due to rusted terminals or foreign matter lodged in terminals

CONNECTOR PIN INSPECTION

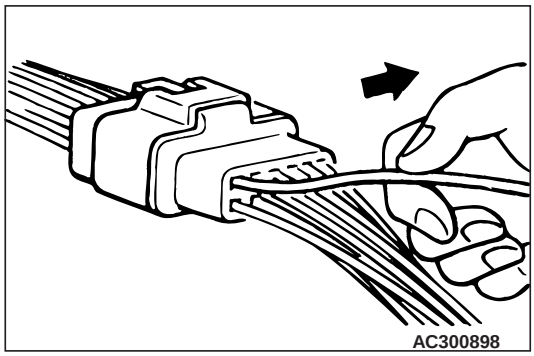

If the connector pin stopper is damaged, the terminal connections (male and female pins) will not be perfect even if the connector body is connected, and the pins may pull out of the reverse side of the connector. Therefore, gently pull the harnesses one by one to make sure that no pins pull out of the connector.

CONNECTOR ENGAGEMENT INSPECTION

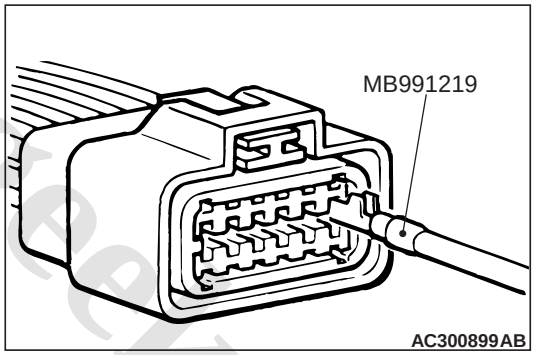

Use special tool inspection harness (MB991219) (connector pin connection pressure inspection harness of the inspection harness set) to inspect the engagement of the male pins and female pins. (Pin drawing force: 1 N or more)

www.cargeek.ir

www.CarGeek.ir

INSPECTION SERVICE POINTS FOR A BLOWN FUSE

M1001013800432

⚠ CAUTION

A diagnosis code may be stored due to a blown fuse.

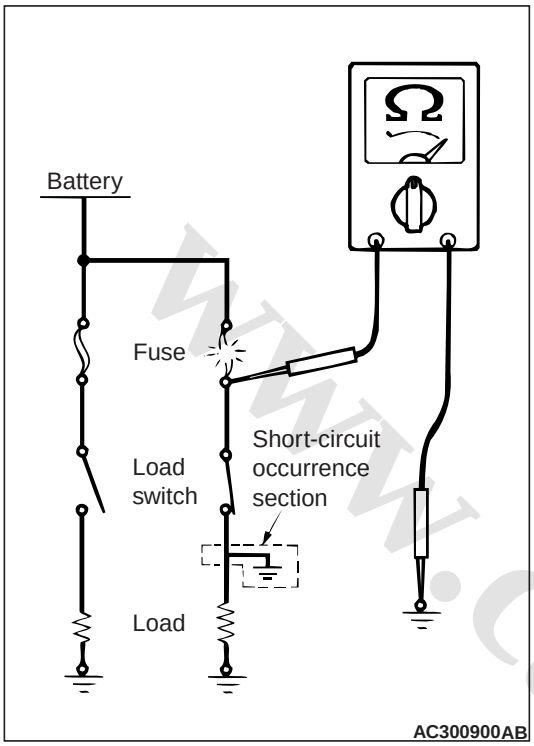

Remove the blown fuse and measure the resistance between the load side of the blown fuse and the earth. Close the switches of all circuits which are connected to this fuse. If the resistance is almost 0 Ω at this time, there is a short somewhere between these switches and the load. If the resistance is not 0 Ω, there is no short at the present time, but a momentary short has probably caused the fuse to blow.

The main causes of a short circuit are the following.

- Harness being clamped by the vehicle body
- Damage to the outer casing of the harness due to wear or heat
- Water getting into the connector or circuitry
- Human error (mistakenly shorting a circuit, etc.)

HOW TO COPE WITH INTERMITTENT MALFUNCTIONS

M1001013900406

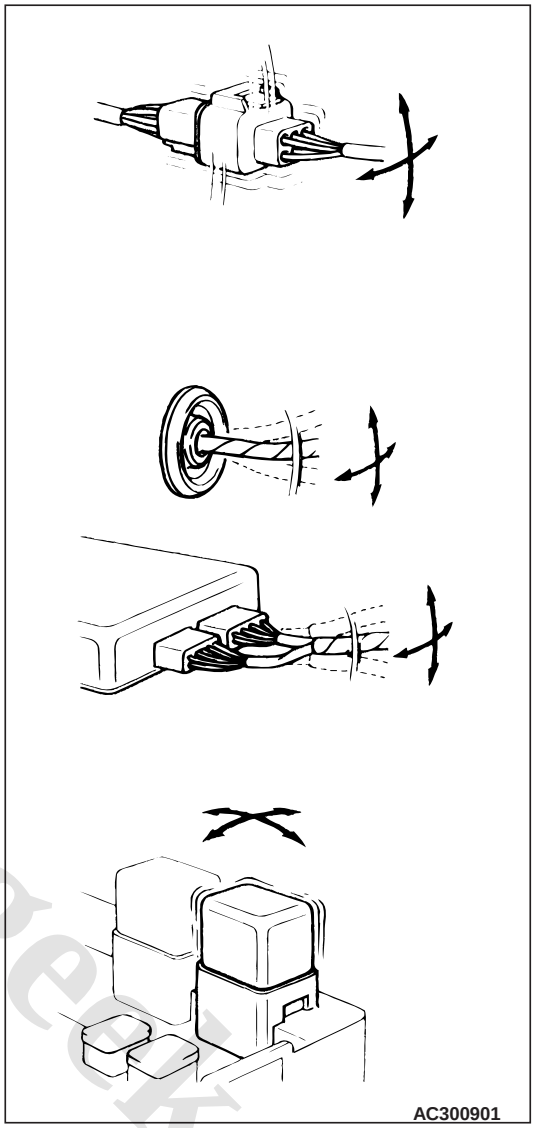

Intermittent malfunctions often occur under certain conditions, and if these conditions can be ascertained, determining the cause becomes simple. In order to ascertain the conditions under which an intermittent malfunction occurs, first ask the customer for details about the driving conditions, weather conditions, frequency of occurrence and trouble symptoms, and then try to recreate the trouble symptoms. Next, ascertain whether the reason why the trouble symptom occurred under these conditions is due to vibration, temperature or some other factor. If vibration is thought to be the cause, carry out the following checks with the connectors and components to confirm whether the trouble symptom occurs. The objects to be checked are connectors and components which are indicated by inspection procedures or given as probable causes (which generates diagnosis codes or trouble symptoms).

www.cargeek.ir

www.CarGeek.ir

- Gently shake the connector up, down and to the left and right.
- Gently shake the wiring harness up, down and to the left and right.
- Gently rock each sensor and relay, etc. by hand.
- Gently shake the wiring harness at suspensions and other moving parts.

NOTE: If determining the cause is difficult, the drive recorder function of the M.U.T.-III can also be used. (For details on how to use the M.U.T.-III, refer to the "M.U.T.-III operation manual).

HOW TO TREAT PAST TROUBLE

M1001014100403

Since the trouble may still be present even the status is "Stored", set the vehicle to the diagnosis code detection condition and check that the status changes to "Active". If the status does not change from "Stored", carry out the following procedure.

1. Establish from the customer whether a fuse or connector has been replaced or disconnected.
2. If yes, erase the diagnosis code, and then check that no diagnostic code is reset. If no diagnosis code is reset, the diagnosis is complete.
3. If no, follow the applicable Diagnostic Trouble Code Chart. Then check the wiring harness and connector, and refer to "How to Cope with Intermittent Malfunction P.00-14 ."

VEHICLE IDENTIFICATION

MODELS <LANCER>

M1001000306587

VEHICLES FOR EUROPE

<1600>

Model code		Engine model	Transmission model	Fuel supply system
CY1A	SRSPL6	4A92 (1,590 mL) DOHC MIVEC petrol engine <Low CO_2 specification>	F4A4A (Front wheel drive 2WD, 4A/T)	MPI
	SNSPL6		F5M43 (Front wheel drive 2WD, 5M/T)	
	SNSPR6			
	SNSXL6	4A92 (1,590 mL) DOHC MIVEC petrol engine <Low CO_2 specification> with Auto Stop & Go (AS&G) <Clear Tec AS&G>		

www.cargeek.ir

www.CarGeek.ir

<1800>

Model code		Engine model	Transmission model	Fuel supply system
CY6A	SNSPL6	4J10 (1,798 mL) SOHC MIVEC petrol engine <Low CO_2 specification>	F5MBB (Front wheel drive 2WD, 5M/T)	MPI
	STSPL6		F1CJA (Front wheel drive 2WD, INVECS-III CVT with sport mode)	
	SNXPL6		F5MBB (Front wheel drive 2WD, 5M/T)	
	STXPL6		F1CJA (Front wheel drive 2WD, INVECS-III CVT with sport mode)	
	STXPR6			
	SNXXL6	4J10 (1,798 mL) SOHC MIVEC petrol engine <Low CO_2 specification> with Auto Stop & Go (AS&G) <Clear Tec AS&G>	F5MBB (Front wheel drive 2WD, 5M/T)	
CY9A	SJLSL6	4N13 (1,798 mL) DOHC MIVEC Low-power diesel engine with intercooled turbocharger <Low CO_2 specification>, Auto Stop & Go (AS&G) <Clear Tec AS&G>	F6MBA (Front wheel drive 2WD, 6M/T)	Common rail fuel injection (Electrical fuel injection)
	SJSSL6			
	SJSSR6			
	SJXSL6			
	SJXSR6			
	SJLXL6	4N13 (1,798 mL) DOHC MIVEC diesel engine with intercooled turbocharger <Low CO_2 specification>, Auto Stop & Go (AS&G) <Clear Tec AS&G>		
	SJSXL6			
	SJXXL6			

VEHICLES FOR RUSSIA (EASTERM EUROPE COUNTRIES)

<1600>

Model code		Engine model	Transmission model	Fuel supply system
CY1A	SNSHL6Z	4A92 (1,590 mL) DOHC MIVEC petrol engine	F5M43 (Front wheel drive 2WD, 5M/T)	MPI
	SRSHL6Z		F4A4A (Front wheel drive 2WD, 4A/T)	

www.cargeek.ir

www.CarGeek.ir

<1800>

Model code		Engine model	Transmission model	Fuel supply system
CY3A	SNSHL6Z	4B10 (1,798 mL) DOHC MIVEC petrol engine	F5MBB (Front wheel drive 2WD, 5M/T)	MPI
	STSHL6Z		F1CJA (Front wheel drive 2WD, INVECS-III CVT with sport mode)	

<2000>

Model code		Engine model	Transmission model	Fuel supply system
CY4A	SNXHL6Z	4B11 (1,998 mL) DOHC MIVEC petrol engine	F5MBB (Front wheel drive 2WD, 5M/T)	MPI
	STXHL6Z		F1CJA (Front wheel drive 2WD, INVECS-III CVT with sport mode)	

MODEL CODE

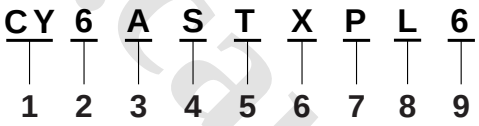

ACB01720

No.	Item	Content	
1	Development	CY	LANCER
2	Engine type	1	1.6L petrol engine (4A92)
		3	1.8L petrol engine (4B10)
		4	2.0L petrol engine (4B11)
		6	1.8L petrol engine (4J10)
		9	1.8L diesel engine (4N13)
3	Vehicle type	A	Passenger car
4	Body style	S	4-door sedan
5	Transmission type	J	6M/T
		N	5M/T
		R	4A/T
		T	CVT
6	Price class (Trim level)	L	BASE
		S	INFORM <Vehicles for Europe (Except for Russia)>
			INVITE <Vehicles for Russia>
		X	INTENSE

www.cargeek.ir

www.CarGeek.ir

No.	Item	Content	
7	Engine specification	H	MIVEC (DOHC)
		P	Low CO_2 specification <Petrol engine>
		S	Intercooled turbocharger (Low-power)
		X	Auto Stop & Go (AS&G) <Clear Tec AS&G>
8	Steering wheel location	L	Left hand drive
		R	Right hand drive
9	Destination	6	Vehicles for Europe (Except for Eastern Europe countries)
		6Z	Vehicles for Russia (Eastern Europe countries)

MODELS <LANCER SPORTBACK>

M1001000306598

<1600>

Model code		Engine model	Transmission model	Fuel supply system
CX1A	LNSPL6	4A92 (1,590 mL) DOHC MIVEC petrol engine <Low CO_2 specification>	F5M43 (Front wheel drive 2WD, 5M/T)	MPI
	LNSPR6			
	LNSXL6	4A92 (1,590 mL) DOHC MIVEC petrol engine <Low CO_2 specification> with Auto Stop & Go (AS&G) <Clear Tec AS&G>		
	LNSXR6			

<1800>

Model code		Engine model	Transmission model	Fuel supply system
CX6A	LNSPL6	4J10 (1,798 mL) SOHC MIVEC petrol engine <Low CO_2 specification>	F5MBB (Front wheel drive 2WD, 5M/T)	MPI
	LTSPL6		F1CJA (Front wheel drive 2WD, INVECS-III CVT with sport mode)	
	LTSPR6			
	LNXPL6		F5MBB (Front wheel drive 2WD, 5M/T)	
	LTXPL6		F1CJA (Front wheel drive 2WD, INVECS-III CVT with sport mode)	
	LTXPR6			
	LNXXL6	4J10 (1,798 mL) SOHC MIVEC petrol engine <Low CO_2 specification>, Auto Stop & Go (AS&G) <Clear Tec AS&G>	F5MBB (Front wheel drive 2WD, 5M/T)	

www.cargeek.ir

www.CarGeek.ir

Model code		Engine model	Transmission model	Fuel supply system
CX9A	LJLSL6	4N13 (1,798 mL) DOHC MIVEC Low-power diesel engine with Intercooled turbocharger <Low CO_2 specification>, Auto Stop & Go (AS&G) <Clear Tec AS&G>	F6MBA (Front wheel drive 2WD, 6M/T)	Common rail fuel injection (Electrical fuel injection)
	LJSSL6			
	LJSSR6			
	LJXSL6			
	LJXSR6			
	LJLXL6	4N13 (1,798 mL) DOHC MIVEC diesel engine with Intercooled turbocharger <Low CO_2 specification>, Auto Stop & Go (AS&G) <Clear Tec AS&G>		
	LJSXL6			
	LJXXL6			

MODEL CODE

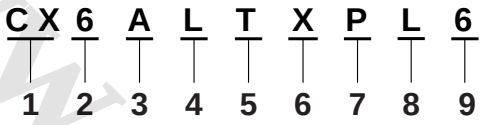

ACB01721

No.	Item	Content	
1	Development	CX	LANCER SPORTBACK
2	Engine type	1	1.6 L petrol engine (4A92)
		6	1.8 L petrol engine (4J10)
		9	1.8 L diesel engine (4N13)
3	Vehicle type	A	Passenger car
4	Body style	L	4-door with tailgate
5	Transmission type	J	6M/T
		N	5M/T
		T	CVT
6	Price class (Trim level)	L	BASE
		S	INFORM
		X	INTENSE
7	Engine specification	P	Low CO_2 specification <Petrol engine>
		S	Intercooled turbocharger (Low-power)
		X	Auto Stop & Go (AS&G) <Clear Tec AS&G>
8	Steering wheel location	L	Left hand drive
		R	Right hand drive
9	Destination	6	Vehicles for Europe

www.cargeek.ir

www.CarGeek.ir

VEHICLE IDENTIFICATION NUMBER (CHASSIS NUMBER)

The vehicle identification number (chassis number) is stamped on the front floor pan right side.

M1001005602592

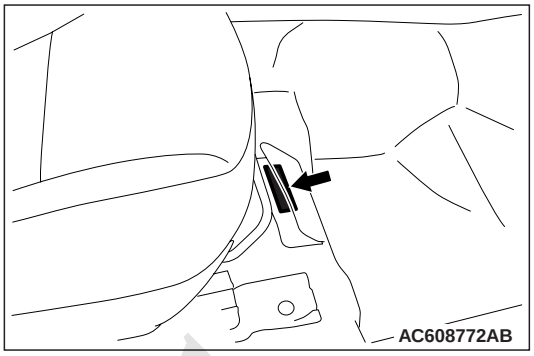

CODE CHART

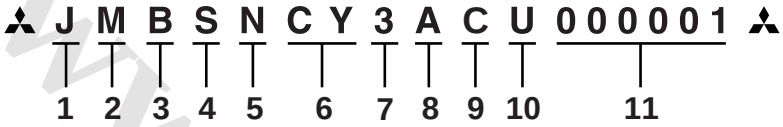

AC809191AE

No.	Item	Content	
1	Country	J	Japan
2	Make	M	Mitsubishi Motors Corporation.
3	Destination	A	Vehicles for Europe, right hand drive
		B	Vehicles for Europe, left hand drive
4	Body style	S	4-door sedan
		L	4-door with tailgate
5	Transmission type	J	6M/T
		N	5M/T
		R	4A/T
		T	CVT
6	Development order	CY	LANCER
		CX	LANCER SPORTBACK
7	Engine type	1	1.6L petrol engine (4A92)
		3	1.8L petrol engine (4B10)
		4	2.0L petrol engine (4B11)
		6	1.8L petrol engine (4J10)
		9	1.8L diesel engine (4N13)
8	Vehicle type	A	Passenger car
9	Model year	C	2012 year
10	Plant	U	Mizushima
11	Serial number	000001 to 999999	

www.cargeek.ir

www.CarGeek.ir

VEHICLE INFORMATION CODE PLATE

M1001005403201

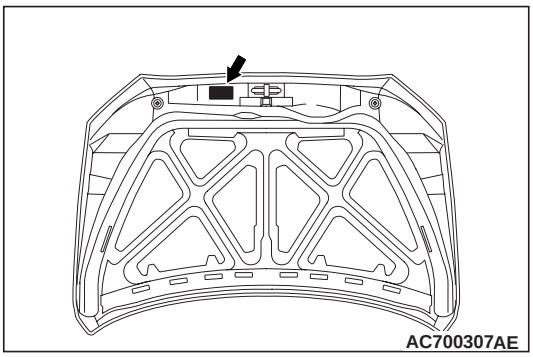

The vehicle information code plate is riveted to the back of the hood.

CODE CHART

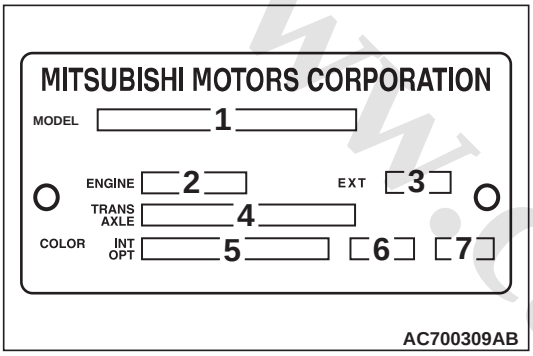

No.	Item	Example	Content
1	MODEL	CY6AST XPL6	Vehicle model Model series
2	ENGINE	4J10	Engine model
3	EXT	W37A	Exterior code
4	TRANS AXLE	F1CJA 6120	F1CJA: Transmission model 6120: Rear differential final gear ratio (a decimal point is omitted)
5	COLOUR	W37	Body colour code
6	INT	04X	Interior code
7	OPT	ZP6	Equipment code

MANUFACTURER PLATE

M1001017600162

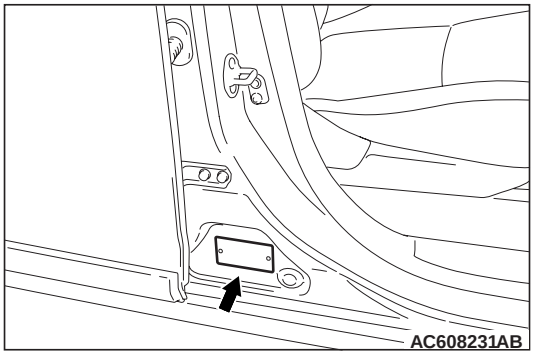

The manufacturer plate is attached to the face of the right door sill.

CODE CHART

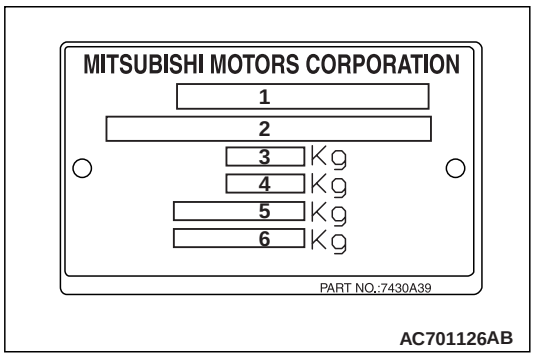

No.	Content
1	WVTA No. (Whole vehicle type approval number) <Vehicles for Europe>
	None <Vehicles for Russia>
2	Chassis No. (Vehicle identification number)
3	Gross vehicle weight
4	Gross combination weight
5	Gross axle weight front
6	Gross axle weight rear

VEHICLE IDENTIFICATION NUMBER (VIN) PLATE

M1001005501990

<RIGHT HAND DRIVE VEHICLES>

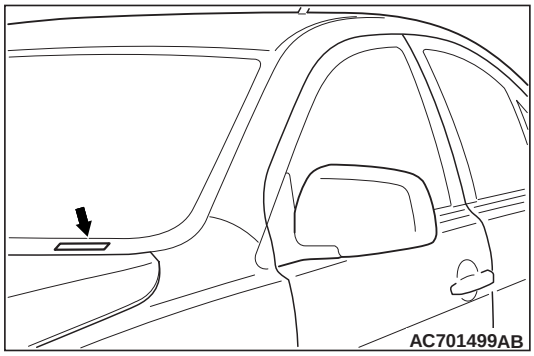

www.cargeek.ir

www.CarGeek.ir

The vehicle identification number (VIN) plate is located on a plate attached to the left top side of the instrument panel.

CODE CHART

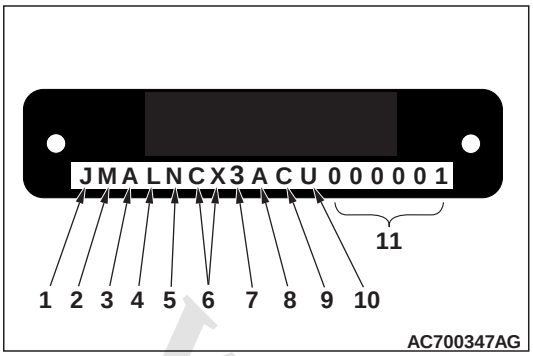

No.	Item	Content	
1	Country	J	Japan
2	Make	M	Mitsubishi Motors Corporation.
3	Destination	A	Vehicles for Europe, right hand drive
4	Body style	S	4-door sedan
		L	4-door with tailgate
5	Transmission type	J	6M/T
		N	5M/T
		T	CVT
6	Development order	CY	LANCER
		CX	LANCER SPORTBACK
7	Engine type	1	1.6L (4A92)
		3	1.8L (4B10)
		4	2.0L (4B11)
		6	1.8L (4J10)
		9	1.8L (4N13)
8	Vehicle type	A	Passenger car
9	Model year	C	2012 year
10	Plant	U	Mizushima
11	Serial number	000001 to 999999	

ENGINE MODEL STAMPING

M1001005701109

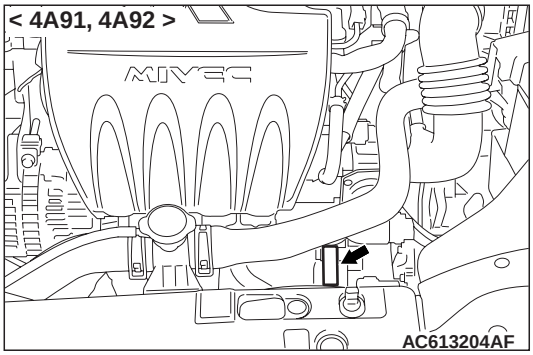

AC613204AF

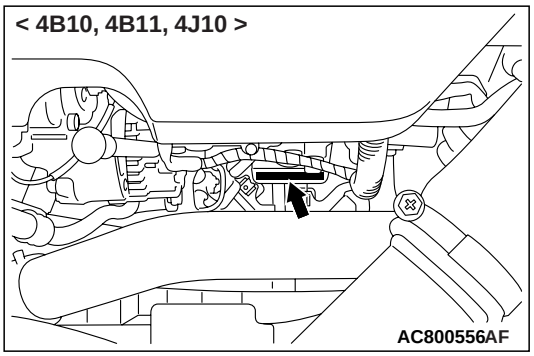

AC800556AF

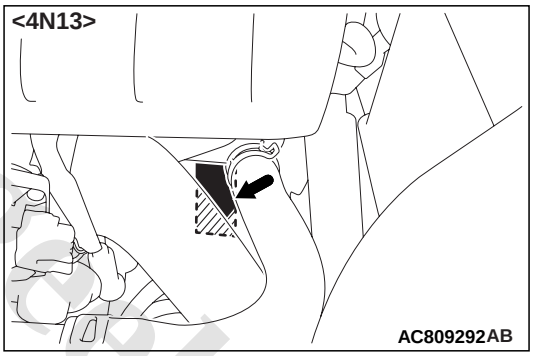

AC809292AB

The engine model is stamped on the cylinder block. These engine model numbers are as shown as follows.

Engine model	Engine displacement
4A92	1,590 mL
4J10	1,798 mL
4B10	1,798 mL
4N13	1,798 mL
4B11	1,998 mL

The engine serial number is stamped near the engine model number.

Engine serial number	AA0201 to YY9999

www.cargeek.ir

www.CarGeek.ir

GENERAL DATA AND SPECIFICATIONS

GENERAL DATA AND SPECIFICATIONS <LANCER>

M1001000906824

VEHICLES FOR EUROPE

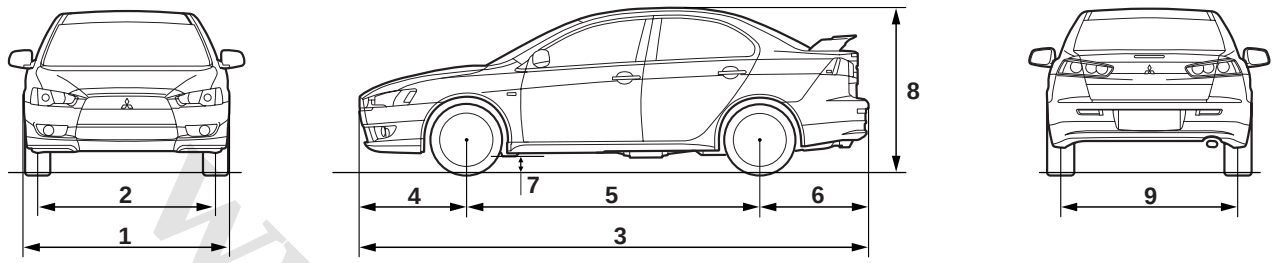

AC608677AB

<1600>

Item			INFORM	
			CY1A	
			SRSPL6	SNSPL6/SNSPR6
Vehicle dimension mm	Overall width	1	1,760	1,760
	Front track	2	1,530	1,530
	Overall length	3	4,570	4,570
	Front overhang	4	955	955
	Wheelbase	5	2,635	2,635
	Rear overhang	6	980	980
	Ground clearance (unladen)	7	140	140
	Overall height (unladen)	8	1,480	1,480
	Rear track	9	1,530	1,530
Vehicle weight kg	Kerb weight: Without optional parts		1,280	1,260
	Kerb weight: With optional parts		1,338	1,316
	Max. gross vehicle weight		1,750	1,750
	Max. axle weight rating-front		905	905
	Max. axle weight rating-rear		915	915
Seating capacity			5	5
Engine	Model code		4A92	4A92
	Type		DOHC MIVEC <Low CO_2 specification>	DOHC MIVEC <Low CO_2 specification>
	Total displacement mL		1,590	1,590
Fuel system	Fuel supply system		MPI	MPI

www.cargeek.ir

www.CarGeek.ir

Item		INFORM	
		CY1A	
		SRSPL6	SNSPL6/SNSPR6
Transmission	Model code	F4A4A	F5M43
	Type	Front wheel drive 2WD, 4A/T	Front wheel drive 2WD, 5M/T
Turning radius m	Wheel	5.0	5.0
	Body	5.4	5.4

Item			INFORM
			CY1A
			SNSXL6
Vehicle dimension mm	Overall width	1	1,760
	Front track	2	1,530
	Overall length	3	4,570
	Front overhang	4	955
	Wheelbase	5	2,635
	Rear overhang	6	980
	Ground clearance (unladen)	7	140
	Overall height (unladen)	8	1,480
	Rear track	9	1,530
Vehicle weight kg	Kerb weight: Without optional parts		1,260
	Kerb weight: With optional parts		1,316
	Max. gross vehicle weight		1,750
	Max. axle weight rating-front		905
	Max. axle weight rating-rear		915
Seating capacity			5
Engine	Model code		4A92
	Type		DOHC MIVEC <Low CO_2 specification>, Auto Stop & Go (AS&G) <Clear Tec AS&G>
	Total displacement mL		1,590
Fuel system	Fuel supply system		MPI
Transmission	Model code		F5M43
	Type		Front wheel drive 2WD, 5M/T
Turning radius m	Wheel		5.0
	Body		5.4

www.cargeek.ir

www.CarGeek.ir

<1800>

Item			INFORM	
			CY6A	
			SNSPL6	STSPL6
Vehicle dimension mm	Overall width	1	1,760	1,760
	Front track	2	1,530	1,530
	Overall length	3	4,570	4,570
	Front overhang	4	955	955
	Wheelbase	5	2,635	2,635
	Rear overhang	6	980	980
	Ground clearance (unladen)	7	140	140
	Overall height (unladen)	8	1,480	1,480
	Rear track	9	1,530	1,530
Vehicle weight kg	Kerb weight: Without optional parts		1,305	1,335
	Kerb weight: With optional parts		1,361	1,391
	Max. gross vehicle weight		1,850	1,850
	Max. axle weight rating-front		990	990
	Max. axle weight rating-rear		930	930
Seating capacity			5	5
Engine	Model code		4J10	4J10
	Type		SOHC MIVEC <Low CO_2 specification>	SOHC MIVEC <Low CO_2 specification>
	Total displacement mL		1,798	1,798
Fuel system	Fuel supply system		MPI	MPI
Transmission	Model code		F5MBB	F1CJA
	Type		Front wheel drive 2WD, 5M/T	Front wheel drive 2WD, INVECS-III CVT with sport mode
Turning radius m	Wheel		5.0	5.0
	Body		5.4	5.4

Item			INTENSE	
			CY6A	
			SNXPL6	STXPL6/STXPR6
Vehicle dimension mm	Overall width	1	1,760	1,760
	Front track	2	1,530	1,530
	Overall length	3	4,570	4,570
	Front overhang	4	955	955
	Wheelbase	5	2,635	2,635
	Rear overhang	6	980	980
	Ground clearance (unladen)	7	150	150
	Overall height (unladen)	8	1,490	1,490
	Rear track	9	1,530	1,530

www.cargeek.ir

www.CarGeek.ir

Item			INTENSE	
			CY6A	
			SNXPL6	STXPL6/STXPR6
Vehicle weight kg	Kerb weight	Without optional parts	1,325	1,355
		With optional parts	1,374	1,404
	Max. gross vehicle weight		1,850	1,850
	Max. axle weight rating-front		990	990
	Max. axle weight rating-rear		930	930
Seating capacity			5	5
Engine	Model code		4J10	4J10
	Type		SOHC MIVEC <Low CO_2 specification>	SOHC MIVEC <Low CO_2 specification>
	Total displacement mL		1,798	1,798
Fuel system	Fuel supply system		MPI	MPI
Transmission	Model code		F5MBB	F1CJA
	Type		Front wheel drive 2WD, 5M/T	Front wheel drive 2WD, INVECS-III CVT with sport mode
Turning radius m	Wheel		5.0	5.0
	Body		5.4	5.4

Item			INTENSE
			CY6A
			SNXXL6
Vehicle dimension mm	Overall width	1	1,760
	Front track	2	1,530
	Overall length	3	4,570
	Front overhang	4	955
	Wheelbase	5	2,635
	Rear overhang	6	980
	Ground clearance (unladen)	7	150
	Overall height (unladen)	8	1,490
	Rear track	9	1,530
Vehicle weight kg	Kerb weight	Without optional parts	1,325
		With optional parts	1,374
	Max. gross vehicle weight		1,850
	Max. axle weight rating-front		990
	Max. axle weight rating-rear		930
Seating capacity			5
Engine	Model code		4J10
	Type		SOHC MIVEC <Low CO_2 specification>, Auto Stop & Go (AS&G) <Clear Tec AS&G>
	Total displacement mL		1,798

www.cargeek.ir

www.CarGeek.ir

Item		INTENSE
		CY6A
		SNXXL6
Fuel system	Fuel supply system	MPI
Transmission	Model code	F5MBB
	Type	Front wheel drive 2WD, 5M/T
Turning radius m	Wheel	5.0
	Body	5.4

Item			BASE	
			CY9A	
			SJLXL6	SJLSL6
Vehicle dimension mm	Overall width	1	1,760	1,760
	Front track	2	1,530	1,530
	Overall length	3	4,570	4,570
	Front overhang	4	955	955
	Wheelbase	5	2,635	2,635
	Rear overhang	6	980	980
	Ground clearance (unladen)	7	140	140
	Overall height (unladen)	8	1,480	1,480
	Rear track	9	1,530	1,530
Vehicle weight kg	Kerb weight: Without optional parts		1,370	1,365
	Kerb weight: With optional parts		1,375	1,370
	Max. gross vehicle weight		1,940	1,940
	Max. axle weight rating-front		1,080	1,080
	Max. axle weight rating-rear		930	930
Seating capacity			5	5
Engine	Model code		4N13	4N13
	Type		DOHC MIVEC with intercooled turbocharger <Low CO_2 specification>, Auto Stop & Go (AS&G) <Clear Tec AS&G>	DOHC MIVEC low-power diesel with intercooled turbocharger <Low CO_2 specification>, Auto Stop & Go (AS&G) <Clear Tec AS&G>
	Total displacement mL		1,798	1,798
Fuel system	Fuel supply system		Common rail fuel injection	Common rail fuel injection
Transmission	Model code		F6MBA	F6MBA
	Type		Front wheel drive 2WD, 6M/T	Front wheel drive 2WD, 6M/T
Turning radius m	Wheel		5.0	5.0
	Body		5.4	5.4

www.cargeek.ir

www.CarGeek.ir

Item			INFORM	
			CY9A	
			SJSXL6	SJSSL6/SJSSR6
Vehicle dimension mm	Overall width	1	1,760	1,760
	Front track	2	1,530	1,530
	Overall length	3	4,570	4,570
	Front overhang	4	955	955
	Wheelbase	5	2,635	2,635
	Rear overhang	6	980	980
	Ground clearance (unladen)	7	140	140
	Overall height (unladen)	8	1,480	1,480
	Rear track	9	1,530	1,530
Vehicle weight kg	Kerb weight: Without optional parts		1,425	1,420
	Kerb weight: With optional parts		1,473	1,468
	Max. gross vehicle weight		1,940	1,940
	Max. axle weight rating-front		1,080	1,080
	Max. axle weight rating-rear		930	930
Seating capacity			5	5
Engine	Model code		4N13	4N13
	Type		DOHC MIVEC with intercooled turbocharger <Low CO_2 specification>, Auto Stop & Go (AS&G) <Clear Tec AS&G>	DOHC MIVEC low-power diesel with intercooled <Low CO_2 specification> turbocharger, Auto Stop & Go (AS&G) <Clear Tec AS&G>
	Total displacement mL		1,798	1,798
Fuel system	Fuel supply system		Common rail fuel injection	Common rail fuel injection
Transmission	Model code		F6MBA	F6MBA
	Type		Front wheel drive 2WD, 6M/T	Front wheel drive 2WD, 6M/T
Turning radius m	Wheel		5.0	5.0
	Body		5.4	5.4

www.cargeek.ir

www.CarGeek.ir

Item			INTENSE	
			CY9A	
			SJXXL6	SJXSL6/SJXSR6
Vehicle dimension mm	Overall width	1	1,760	1,760
	Front track	2	1,530	1,530
	Overall length	3	4,570	4,570
	Front overhang	4	955	955
	Wheelbase	5	2,635	2,635
	Rear overhang	6	980	980
	Ground clearance (unladen)	7	150	140
	Overall height (unladen)	8	1,490	1,480
	Rear track	9	1,530	1,530
Vehicle weight kg	Kerb weight: Without optional parts		1,445	1,440
	Kerb weight: With optional parts		1,486	1,481
	Max. gross vehicle weight		1,940	1,940
	Max. axle weight rating-front		1,080	1,080
	Max. axle weight rating-rear		930	930
Seating capacity			5	5
Engine	Model code		4N13	4N13
	Type		DOHC MIVEC with intercooled turbocharger <Low CO_2 specification>, Auto Stop & Go (AS&G) <Clear Tec AS&G>	DOHC MIVEC low-power diesel with intercooled turbocharger, <Low CO_2 specification> Auto Stop & Go (AS&G) <Clear Tec AS&G>
	Total displacement mL		1,798	1,798
Fuel system	Fuel supply system		Common rail fuel injection	Common rail fuel injection
Transmission	Model code		F6MBA	F6MBA
	Type		Front wheel drive 2WD, 6M/T	Front wheel drive 2WD, 6M/T
Turning radius m	Wheel		5.0	5.0
	Body		5.4	5.4

www.cargeek.ir

www.CarGeek.ir

VEHICLES FOR RUSSIA

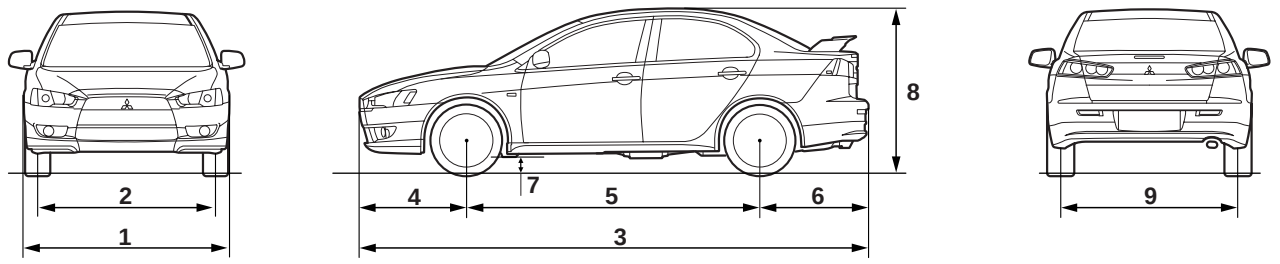

AC608677AB

<1600>

Item			INVITE	
			CY1A	
			SNSHL6Z	SRSHL6Z
Vehicle dimension mm	Overall width	1	1,760	1,760
	Front track	2	1,530	1,530
	Overall length	3	4,570	4,570
	Front overhang	4	955	955
	Wheelbase	5	2,635	2,635
	Rear overhang	6	980	980
	Ground clearance (unladen)	7	165	165
	Overall height (unladen)	8	1,505	1,505
	Rear track	9	1,530	1,530
Vehicle weight kg	Kerb weight: Without optional parts		1,255	1,275
	Kerb weight: With optional parts		1,317	1,337
	Max. gross vehicle weight		1,750	1,750
	Max. axle weight rating-front		905	905
	Max. axle weight rating-rear		915	915
Seating capacity			5	5
Engine	Model code		4A92	4A92
	Type		DOHC MIVEC	DOHC MIVEC
	Total displacement mL		1,590	1,590
Fuel system	Fuel supply system		MPI	MPI
Transmission	Model code		F5M43	F4A4A
	Type		Front wheel drive 2WD, 5M/T	Front wheel drive 2WD, 4A/T
Turning radius m	Wheel		5.0	5.0
	Body		5.4	5.4

www.cargeek.ir

www.CarGeek.ir

<1800>

Item			INVITE	
			CY3A	
			SNSHL6Z	STSHL6Z
Vehicle dimension mm	Overall width	1	1,760	1,760
	Front track	2	1,530	1,530
	Overall length	3	4,570	4,570
	Front overhang	4	955	955
	Wheelbase	5	2,635	2,635
	Rear overhang	6	980	980
	Ground clearance (unladen)	7	165	165
	Overall height (unladen)	8	1,505	1,505
	Rear track	9	1,530	1,530
Vehicle weight kg	Kerb weight: Without optional parts		1,290	1,320
	Kerb weight: With optional parts		1,358	1,388
	Max. gross vehicle weight		1,850	1,850
	Max. axle weight rating-front		990	990
	Max. axle weight rating-rear		930	930
Seating capacity			5	5
Engine	Model code		4B10	4B10
	Type		DOHC MIVEC	DOHC MIVEC
	Total displacement mL		1,798	1,798
Fuel system	Fuel supply system		MPI	MPI
Transmission	Model code		F5MBB	F1CJA
	Type		Front wheel drive 2WD, 5M/T	Front wheel drive 2WD, INVECS-III CVT with sport mode
Turning radius m	Wheel		5.0	5.0
	Body		5.4	5.4

<2000>

Item			INTENSE	
			CY4A	
			SNXHL6Z	STXHL6Z
Vehicle dimension mm	Overall width	1	1,760	1,760
	Front track	2	1,530	1,530
	Overall length	3	4,570	4,570
	Front overhang	4	955	955
	Wheelbase	5	2,635	2,635
	Rear overhang	6	980	980
	Ground clearance (unladen)	7	140	140
	Overall height (unladen)	8	1,480	1,480
	Rear track	9	1,530	1,530

www.cargeek.ir

www.CarGeek.ir

Item			INTENSE	
			CY4A	
			SNXHL6Z	STXHL6Z
Vehicle weight kg	Kerb weight	Without optional parts	1,295	1,325
		With optional parts	1,360	1,390
	Max. gross vehicle weight		1,850	1,850
	Max. axle weight rating-front		990	990
	Max. axle weight rating-rear		930	930
Seating capacity			5	5
Engine	Model code		4B11	4B11
	Type		DOHC MIVEC	DOHC MIVEC
	Total displacement mL		1,998	1,998
Fuel system	Fuel supply system		MPI	MPI
Transmission	Model code		F5MBB	F1CJA
	Type		Front wheel drive 2WD, 5M/T	Front wheel drive 2WD, INVECS-III CVT with sport mode
Turning radius m	Wheel		5.0	5.0
	Body		5.4	5.4

GENERAL DATA AND SPECIFICATIONS <LANCER SPORTBACK>

M1001000906835

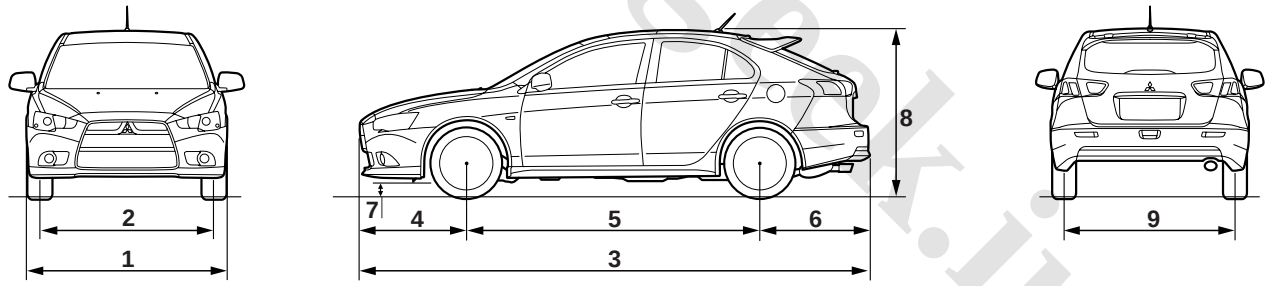

AC801921AB

www.cargeek.ir

www.CarGeek.ir

<1600>

Item				INFORM	
				CX1A	
				LNSPL6/LNSPR6	LNSXL6/LNSXR6
Vehicle dimension mm	Overall width		1	1,760	1,760
	Front track		2	1,530	1,530
	Overall length		3	4,585	4,585
	Front overhang		4	955	955
	Wheelbase		5	2,635	2,635
	Rear overhang		6	995	995
	Ground clearance (unladen)		7	140	140
	Overall height (unladen)		8	1,505	1,505
	Rear track		9	1,530	1,530
Vehicle weight kg	Kerb weight	Without optional parts		1,300	1,300
		With optional parts		1,356	1,356
	Max. gross vehicle weight			1,800	1,800
	Max. axle weight rating-front			905	905
	Max. axle weight rating-rear			965	965
Seating capacity				5	5
Engine	Model code			4A92	4A92
	Type			DOHC MIVEC <Low CO_2 specification>	DOHC MIVEC <Low CO_2 specification>, Auto Stop & Go (AS&G) <Clear Tec AS&G>
	Total displacement mL			1,590	1,590
Fuel system	Fuel supply system			MPI	MPI
Transmission	Model code			F5M43	F5M43
	Type			Front wheel drive 2WD, 5M/T	Front wheel drive 2WD, 5M/T
Turning radius m	Wheel			5.0	5.0
	Body			5.4	5.4

www.cargeek.ir

www.CarGeek.ir

<1800>

Item			INFORM	
			CX6A	
			LNSPL6	LTSPL6/LTSPR6
Vehicle dimension mm	Overall width	1	1,760	1,760
	Front track	2	1,530	1,530
	Overall length	3	4,585	4,585
	Front overhang	4	955	955
	Wheelbase	5	2,635	2,635
	Rear overhang	6	995	995
	Ground clearance (unladen)	7	140/165*	140/165*
	Overall height (unladen)	8	1,505/1,530*	1,505/1,530*
	Rear track	9	1,530	1,530
Vehicle weight kg	Kerb weight: Without optional parts		1,345	1,375
	Kerb weight: With optional parts		1,409	1,439
	Max. gross vehicle weight		1,900	1,900
	Max. axle weight rating-front		990	990
	Max. axle weight rating-rear		980	980
Seating capacity			5	5
Engine	Model code		4J10	4J10
	Type		SOHC MIVEC <Low CO_2 specification>	SOHC MIVEC <Low CO_2 specification>
	Total displacement mL		1,798	1,798
Fuel system	Fuel supply system		MPI	MPI
Transmission	Model code		F5MBB	F1CJA
	Type		Front wheel drive 2WD, 5M/T	Front wheel drive 2WD, INVECS-III CVT with sport mode
Turning radius m	Wheel		5.0	5.0
	Body		5.4	5.4

NOTE:

- **:Vehicles with high ground suspensions optional.*

www.cargeek.ir

www.CarGeek.ir

Item			INTENSE	
			CX6A	
			LNXPL6	LTXPL6/LTXPR6
Vehicle dimension mm	Overall width	1	1,760	1,760
	Front track	2	1,530	1,530
	Overall length	3	4,585	4,585
	Front overhang	4	955	955
	Wheelbase	5	2,635	2,635
	Rear overhang	6	995	995
	Ground clearance (unladen)	7	150	150
	Overall height (unladen)	8	1,515	1,515
	Rear track	9	1,530	1,530
Vehicle weight kg	Kerb weight: Without optional parts		1,365	1,395
	Kerb weight: With optional parts		1,423	1,453
	Max. gross vehicle weight		1,900	1,900
	Max. axle weight rating-front		990	990
	Max. axle weight rating-rear		980	980
Seating capacity			5	5
Engine	Model code		4J10	4J10
	Type		SOHC MIVEC <Low CO_2 specification>	SOHC MIVEC <Low CO_2 specification>
	Total displacement mL		1,798	1,798
Fuel system	Fuel supply system		MPI	MPI
Transmission	Model code		F5MBB	F1CJA
	Type		Front wheel drive 2WD, 5M/T	Front wheel drive 2WD, INVECS-III CVT with sport mode
Turning radius m	Wheel		5.0	5.0
	Body		5.4	5.4

Item			INTENSE
			CX6A
			LNXXL6
Vehicle dimension mm	Overall width	1	1,760
	Front track	2	1,530
	Overall length	3	4,585
	Front overhang	4	955
	Wheelbase	5	2,635
	Rear overhang	6	995
	Ground clearance (unladen)	7	150
	Overall height (unladen)	8	1,515
	Rear track	9	1,530

www.cargeek.ir

www.CarGeek.ir

Item			INTENSE
			CX6A
			LNXXL6
Vehicle weight kg	Kerb weight	Without optional parts	1,365
		With optional parts	1,423
	Max. gross vehicle weight		1,900
	Max. axle weight rating-front		990
	Max. axle weight rating-rear		980
Seating capacity			5
Engine	Model code		4J10
	Type		SOHC MIVEC <Low CO_2 specification>, Auto Stop & Go (AS&G) <Clear Tec AS&G>
	Total displacement mL		1,798
Fuel system	Fuel supply system		MPI
Transmission	Model code		F5MBB
	Type		Front wheel drive 2WD, 5M/T
Turning radius m	Wheel		5.0
	Body		5.4

Item			BASE	
			CX9A	
			LJLSL6	LJLXL6
Vehicle dimension mm	Overall width	1	1,760	1,760
	Front track	2	1,530	1,530
	Overall length	3	4,585	4,585
	Front overhang	4	955	955
	Wheelbase	5	2,635	2,635
	Rear overhang	6	995	995
	Ground clearance (unladen)	7	140	140
	Overall height (unladen)	8	1,505	1,505
	Rear track	9	1,530	1,530
Vehicle weight kg	Kerb weight	Without optional parts	1,400	1,405
		With optional parts	1,405	1,410
	Max. gross vehicle weight		1,990	1,990
	Max. axle weight rating-front		1,080	1,080
	Max. axle weight rating-rear		980	980
Seating capacity			5	5

www.cargeek.ir

www.CarGeek.ir

Item		BASE	
		CX9A	
		LJLSL6	LJLXL6
Engine	Model code	4N13	4N13
	Type	DOHC MIVEC low-power diesel with intercooled turbocharger <Low CO_2 specification>, Auto Stop & Go (AS&G) <Clear Tec AS&G>	DOHC MIVEC with intercooled turbocharger <Low CO_2 specification>, Auto Stop & Go (AS&G) <Clear Tec AS&G>
	Total displacement mL	1,798	1,798
Fuel system	Fuel supply system	Common rail fuel injection	Common rail fuel injection
Transmission	Model code	F6MBA	F6MBA
	Type	Front wheel drive 2WD, 6M/T	Front wheel drive 2WD, 6M/T
Turning radius m	Wheel	5.0	5.0
	Body	5.4	5.4

Item			INFORM	
			CX9A	
			LJSSL6/LJSSR6	LJSXL6
Vehicle dimension mm	Overall width	1	1,760	1,760
	Front track	2	1,530	1,530
	Overall length	3	4,585	4,585
	Front overhang	4	955	955
	Wheelbase	5	2,635	2,635
	Rear overhang	6	995	995
	Ground clearance (unladen)	7	140	140
	Overall height (unladen)	8	1,505	1,505
	Rear track	9	1,530	1,530
Vehicle weight kg	Kerb weight	Without optional parts	1,460	1,465
		With optional parts	1,508	1,513
	Max. gross vehicle weight		1,990	1,990
	Max. axle weight rating-front		1,080	1,080
	Max. axle weight rating-rear		980	980
Seating capacity			5	5
Engine	Model code		4N13	4N13
	Type		DOHC MIVEC low-power diesel with intercooled turbocharger <Low CO_2 specification>, Auto Stop & Go (AS&G) <Clear Tec AS&G>	DOHC MIVEC with intercooled turbocharger <Low CO_2 specification>, Auto Stop & Go (AS&G) <Clear Tec AS&G>
	Total displacement mL		1,798	1,798

www.cargeek.ir

www.CarGeek.ir

Item		INFORM	
		CX9A	
		LJSSL6/LJSSR6	LJSXL6
Fuel system	Fuel supply system	Common rail fuel injection	Common rail fuel injection
Transmission	Model code	F6MBA	F6MBA
	Type	Front wheel drive 2WD, 6M/T	Front wheel drive 2WD, 6M/T
Turning radius m	Wheel	5.0	5.0
	Body	5.4	5.4

Item			INTENSE	
			CX9A	
			LJXSL6/LJXSR6	LJXXL6
Vehicle dimension mm	Overall width	1	1,760	1,760
	Front track	2	1,530	1,530
	Overall length	3	4,585	4,585
	Front overhang	4	955	955
	Wheelbase	5	2,635	2,635
	Rear overhang	6	995	995
	Ground clearance (unladen)	7	150	150
	Overall height (unladen)	8	1,515	1,515
	Rear track	9	1,530	1,530
Vehicle weight kg	Kerb weight	Without optional parts	1,480	1,485
		With optional parts	1,518	1,523
	Max. gross vehicle weight		1,990	1,990
	Max. axle weight rating-front		1,080	1,080
	Max. axle weight rating-rear		980	980
Seating capacity			5	5
Engine	Model code		4N13	4N13
	Type		DOHC MIVEC low-power diesel with Intercooled turbocharger <Low CO_2 specification>, Auto Stop & Go (AS&G) <Clear Tec AS&G>	DOHC MIVEC with Intercooled turbocharger <Low CO_2 specification>, Auto Stop & Go (AS&G) <Clear Tec AS&G>
	Total displacement mL		1,798	1,798
Fuel system	Fuel supply system		Common rail fuel injection	Common rail fuel injection
Transmission	Model code		F6MBA	F6MBA
	Type		Front wheel drive 2WD, 6M/T	Front wheel drive 2WD, 6M/T
Turning radius m	Wheel		5.0	5.0
	Body		5.4	5.4

www.cargeek.ir

www.CarGeek.ir

PRECAUTIONS BEFORE SERVICE

CAUTIONS FOR WORKING IN ENGINE COMPARTMENT <4B11-Turbo, 4N1>

M1001016800174

⚠ ***WARNING***

Just after the ignition switch is turned to "LOCK" (OFF) position, the adjustments must always be made with the cooling fan stopped. After the ignition switch is turned to "LOCK" (OFF) position, the cooling fan might be driven for a few minutes by the after run fan control. If the adjustments are made with the cooling fan driven, injury or damage may occur.

CAUTIONS FOR AIR CONDITIONER STARTING

M1001011300196

⚠ **CAUTION**

Never start the engine with the refrigerant system empty as it will damage the A/C compressor.

www.cargeek.ir

www.cargeek.ir

www.CarGeek.ir

SUPPLEMENTAL RESTRAINT SYSTEM (SRS)

M1001011601684

⚠ CAUTION

Items to review when servicing SRS:

1. **Be sure to read GROUP 52B – Supplemental Restraint System (SRS). For safe operation, please follow the directions and heed all warnings.**
2. **Wait at least 60 seconds after disconnecting the battery cable before doing any further work. The SRS system is designed to retain enough voltage to deploy the air bag even after the battery has been disconnected. Serious injury may result from unintended air bag deployment if work is done on the SRS system immediately after the battery cable is disconnected.**
3. **Warning/Caution labels must be heeded when servicing or handling SRS components. Warning labels can be found in the following locations. (Refer to WARNING/CAUTION LABELS .)**
4. **Always use the designated special tools and test equipment.**
5. **Store components removed from the SRS in a clean and dry place. The air bag module should be stored on a flat surface and placed so that the pad surface is facing upward. Do not place anything on top of it.**
6. **Never attempt to disassemble or repair the SRS components (SRS-ECU, air bag module and clock spring).**
7. **Whenever you finish servicing the SRS, check the SRS warning lamp operation to make sure that the system functions properly.**
8. **Be sure to deploy the air bag before disposing of the air bag module or disposing of a vehicle equipped with an air bag (Refer to GROUP 52B – Air Bag Module Disposal Procedures).**

Observe the following when carrying out operations on places where SRS components are installed, including operations not directly related to the SRS air bag.

1. **When removing or installing parts, do not allow any impact or shock to the SRS components.**
2. **If heat damage may occur during paint work, remove the SRS-ECU, the air bag module, clock spring, the front impact sensor, the side impact sensor, and the seat belt pre-tensioner.**
   - **SRS-ECU, air bag module, clock spring, front impact sensor, the side impact sensor: 93 °C or more**
   - **Seat belt pre-tensioner: 90 °C or more**

SERVICING ELECTRICAL SYSTEM

M1001011900477

⚠ CAUTION

Before connecting or disconnecting the negative (–) cable, be sure to turn off the ignition switch and the lighting switch (If this is not done, there is the possibility of semiconductor parts being damaged).

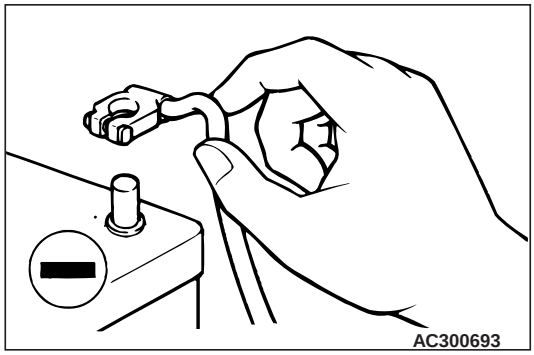

Before replacing a component related to the electrical system and before undertaking any repair procedures involving the electrical system, be sure to first disconnect the negative (–) cable from the battery in order to avoid damage caused by short-circuiting.

HOW TO SHIFT LOCK FORCED RELEASE

M1001018100137

If the shift lever cannot be moved from the P position due to discharged battery or similar reasons, release the shift lock by observing the procedure below.

<TC-SST>

1. Remove the floor console box cup holder and the floor console panel assembly (Refer to GROUP 52A – Floor Console Assembly).
2. Turn the ignition switch to the position other than the LOCK (OFF) position.

www.cargeek.ir

www.CarGeek.ir

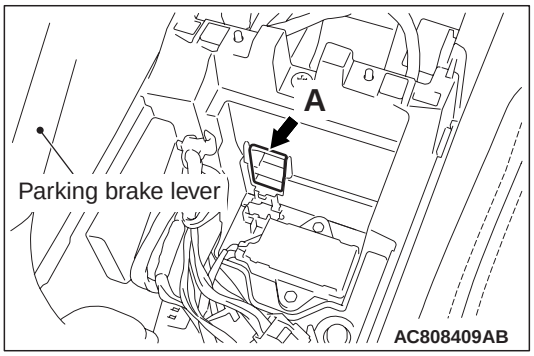

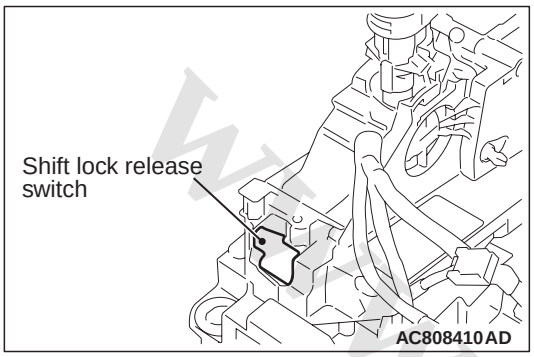

3. Insert a screwdriver or a similar tool from the section "A" shown in the figure. While pressing the shift lock forced release switch, move the shift lever.

<CVT-LHD>

1. Turn the ignition switch to the position other than the LOCK (OFF) position.

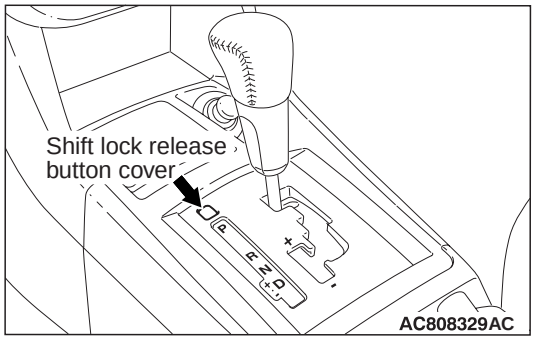

2. Remove the shift lock forced release switch cover shown in the figure. While pressing the shift lock forced release switch with a screwdriver or a similar tool, move the selector lever.

<CVT-RHD>

1. Turn the ignition switch to the position other than the LOCK (OFF) position.

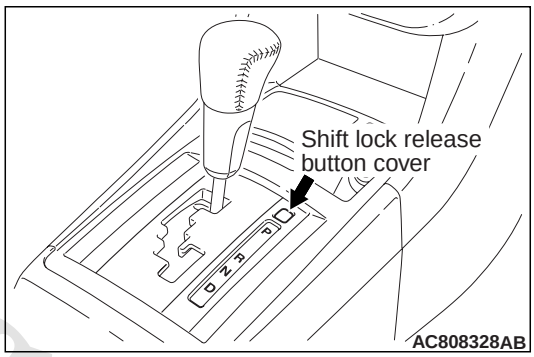

2. Remove the shift lock forced release switch cover shown in the figure. While pressing the shift lock forced release switch with a screwdriver or a similar tool, move the selector lever.

www.cargeek.ir

www.CarGeek.ir

MULTI USE TESTER (M.U.T.-III) SUB ASSEMBLY

M1001012400301

MULTI USE TESTER (M.U.T.-III) sub assembly

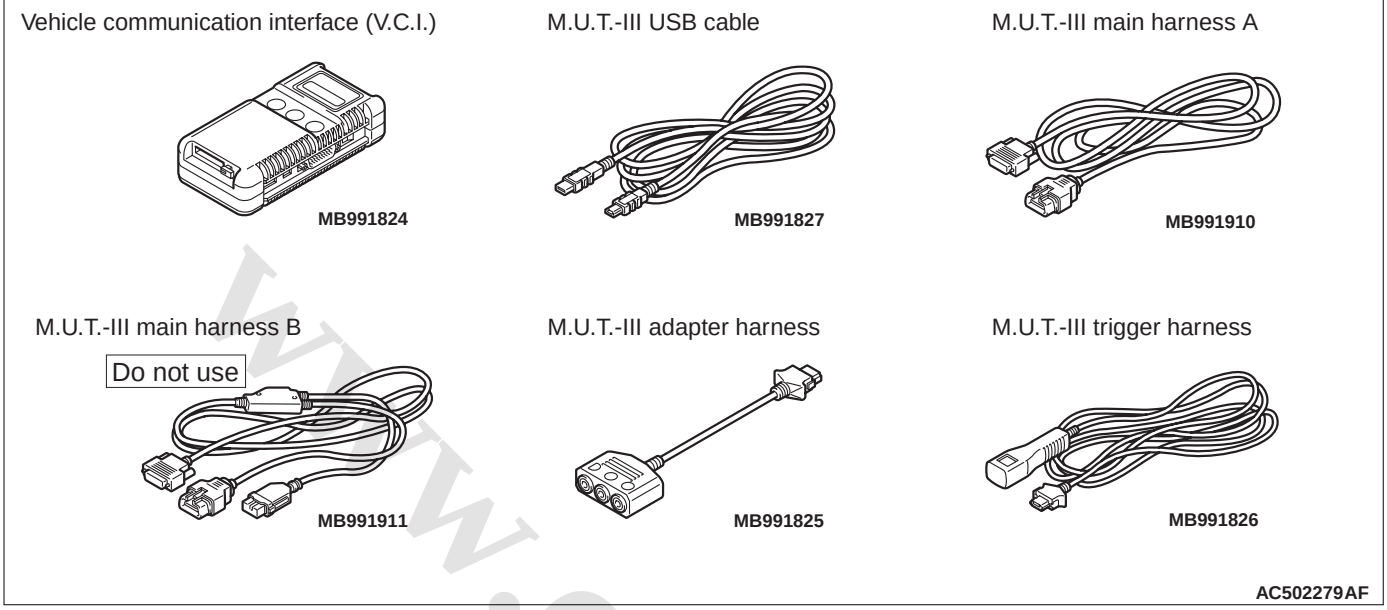

Refer to the "M.U.T.-III OPERATION MANUAL" for instructions on handling the M.U.T.-III.

www.cargeek.ir

www.CarGeek.ir

⚠ CAUTION

Turn the ignition switch to the "LOCK" (OFF) position before connecting or disconnecting the M.U.T.-III.

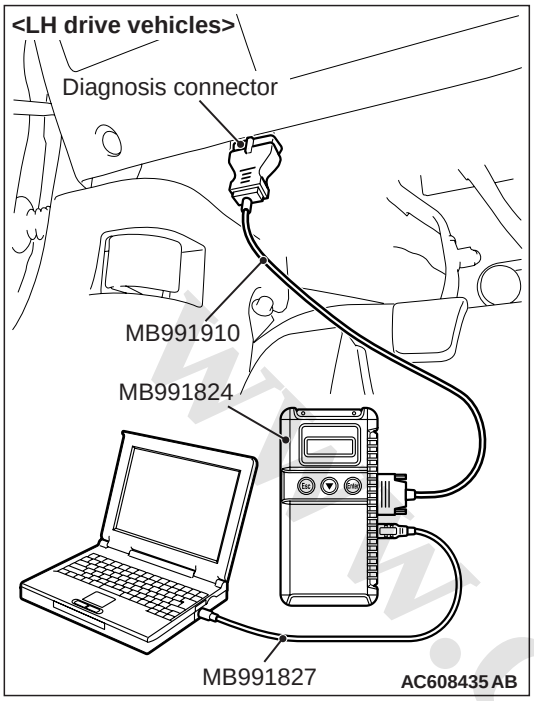

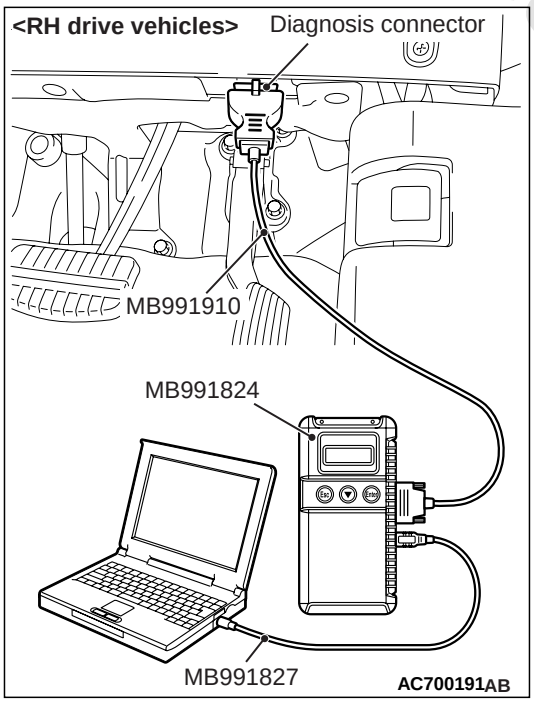

Connect the M.U.T.-III to the diagnosis connector as shown in the illustration.

HOW TO PERFORM CHASSIS NUMBER (CHASSIS NO.) WRITING

M1001015200425

Follow the procedure below to register the Chassis No. of the Wireless Control Module (WCM) and the Keyless Operation System (KOS).

Chassis No. is stored in the engine-ECU, WCM, and the KOS-ECU. If the Chassis No. is improperly erased, the engine warning lamp or the keyless operation system warning indicator illuminates, and the diagnosis code is displayed. When the engine-ECU, WCM, and the KOS-ECU are replaced, follow the procedure below to write the Chassis No.

www.cargeek.ir

www.CarGeek.ir

<When Engine-ECU is replaced>

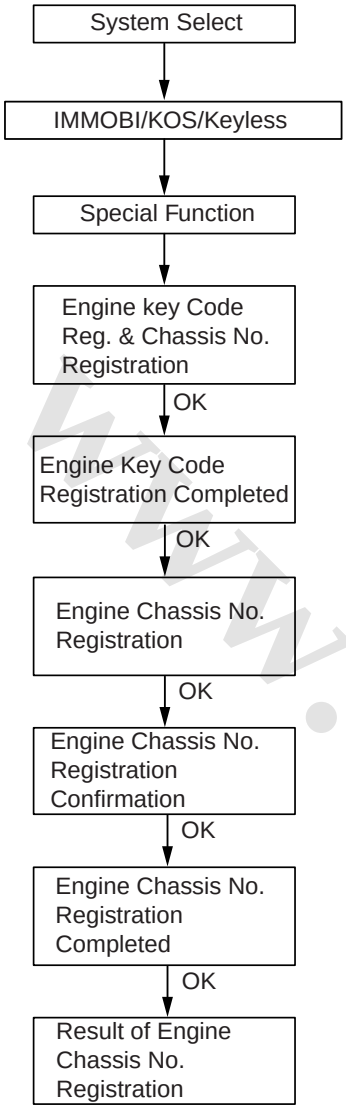

<When WCM or KOS-ECU are replaced>

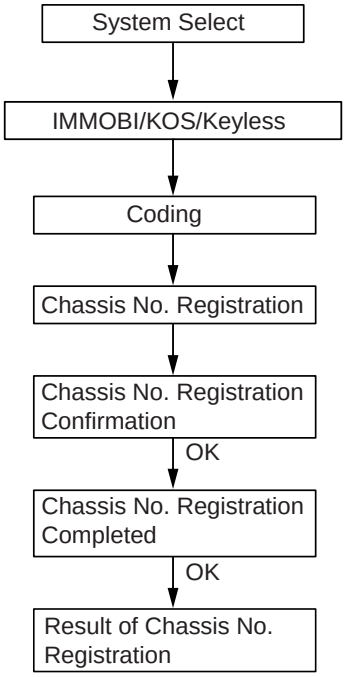

AC700593 AB

NOTE: Perform the variant coding of the engine-ECU when the chassis No. or the vehicle identification number is registered to the engine-ECU.

www.cargeek.ir

www.CarGeek.ir

ENGINE KEY CODE AND CHASSIS NUMBER (CHASSIS NO.) REGISTRATION STEPS FOR THE ENGINE-ECU

⚠ CAUTION

- **Check that diagnosis code No.P0603 "EEPROM fail" is not set. When diagnosis code No. P0603 "EEPROM fail" is set, the engine-ECU cannot store engine key code and chassis No. even if the engine key code and chassis No. are registered. If this diagnosis code is set, troubleshoot the engine-ECU and repair, and then register the engine key code and chassis No. to the engine-ECU.**
- **Before connecting or disconnecting the M.U.T.-III, turn the ignition switch to the "LOCK" (OFF) position.**

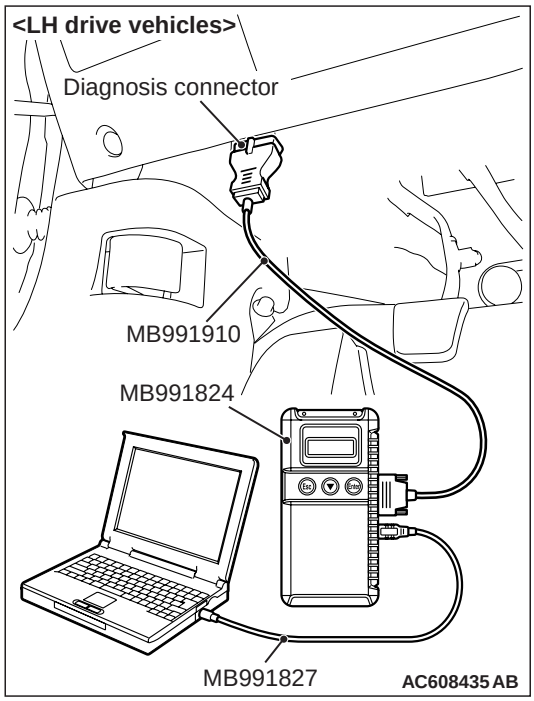

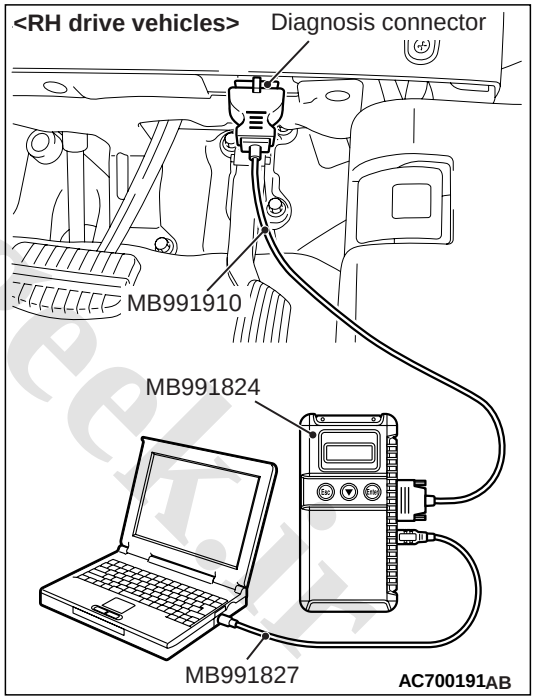

Connect the M.U.T.-III to the 16-pin diagnosis connector as follows.

NOTE: For details on how to use the M.U.T.-III, refer to the "M.U.T.-III User's Manual."

1. Ensure that the ignition switch is at the "LOCK" (OFF) position.
2. Start up the personal computer.
3. Connect special tool USB cable (MB991827) to special tool V.C.I. (MB991824) and the personal computer.

www.cargeek.ir

www.CarGeek.ir

4. Connect special tool M.U.T.-III main wiring harness A (MB991910) to the V.C.I.
5. Connect M.U.T.-III main wiring harness A to the diagnosis connector of the vehicle.
6. Turn the V.C.I. power switch to the "ON" position.

   NOTE: When the V.C.I. is energised, the V.C.I. indicator lamp will be illuminated in a green colour.
7. Start the M.U.T.-III system on the personal computer and turn the ignition switch to the "ON" position.

   NOTE: Since the M.U.T.-III screen display changes according to the vehicle specifications, the illustrations for each item may differ from the actual screen display.

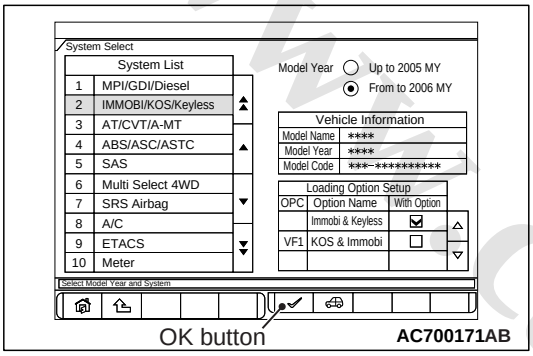

8. Select "IMMOBI/KOS/Keyless" button from the "System Select" screen. Then, select the applicable option code item and push the OK button.
   - The display of "Special Function" screen changes, depending on the contents of the option. For vehicles with KOS, select "KOS&Immobi." For vehicles with WCM, select "Immobi&Keyless."
9. Select "Special Function" on the next screen.

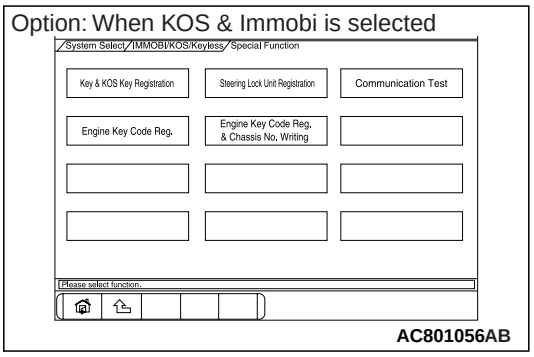

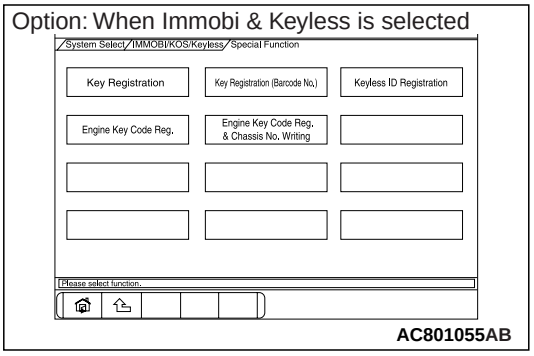

10. Select "Key Code Registration" from the "Special Function" screen.

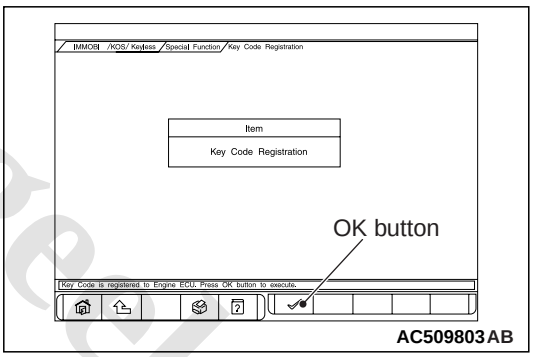

11. Push the OK button after "Key Code Registration to Engine ECU" is displayed.
12. Push the OK button after "Completed. Press the OK button and move to VIN writing function." is displayed.

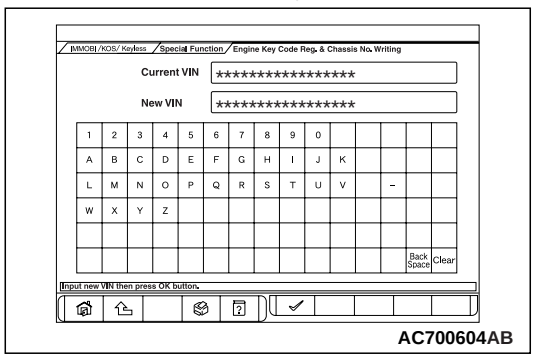

13. Enter the VIN of registering vehicle and push the OK button.

www.cargeek.ir

www.CarGeek.ir

14. Push the OK button after "VIN Writing will start. Are you sure?" is displayed.
15. Return to the previous screen and "In Progress" is displayed at the lower-left corner on the screen.
16. Push the OK button after "Completed." is displayed.

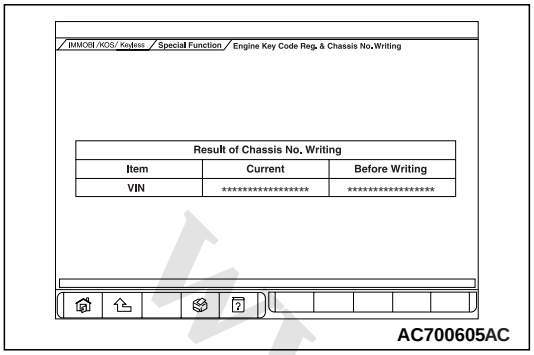

17. VIN writing result is displayed.
18. Complete the M.U.T.-III.
19. Disconnecting the M.U.T.-III is the reverse of the connecting sequence, making sure that the ignition switch is at the "LOCK" (OFF).
20. Push the OK button after "Completed." is displayed.
21. Terminate the M.U.T.-III.
22. Turn the ignition switch to the LOCK (OFF) position and then disconnect the M.U.T.-III.

www.cargeek.ir
www.cargeek.ir

www.CarGeek.ir

CHASSIS NO. WRITING STEPS FOR WCM AND KOS-ECU

⚠ CAUTION

- **Before the chassis No. registration to WCM, check that the chassis Nos. of engine-ECU and vehicle are matched.**
- **Check that diagnosis code No. B2416 "ECU internal error" is not set. When diagnosis code No. B2416 "ECU internal error" is set, the WCM and the KOS-ECU cannot store the Chassis No. even if the Chassis No. is written. If this diagnosis code is set, troubleshoot the WCM or the KOS-ECU and repair, and then write the Chassis No. to the WCM or the KOS-ECU.**
- **Before connecting or disconnecting the M.U.T.-III, turn the ignition switch to the "LOCK" (OFF) position.**

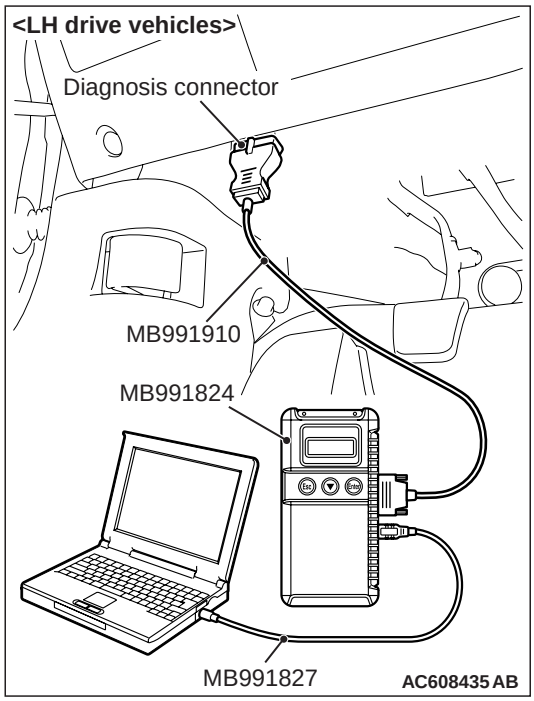

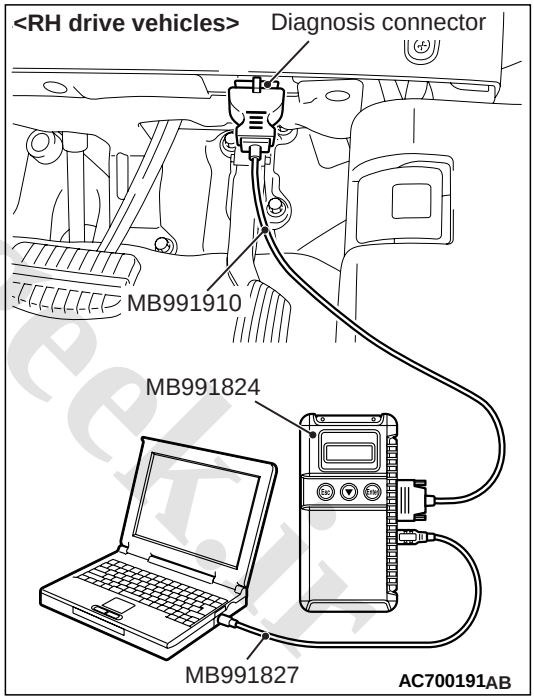

Connect the M.U.T.-III to the 16-pin diagnosis connector as follows.

NOTE: For details on how to use the M.U.T.-III, refer to the "M.U.T.-III operation manual."

1. Ensure that the ignition switch is at the "LOCK" (OFF) position.
2. Start up the personal computer.
3. Connect special tool M.U.T. -III USB cable (MB991827) to special tool V.C.I. (MB991824) and the personal computer.

www.cargeek.ir

www.CarGeek.ir

4. Connect special tool M.U.T.-III main harness A (MB991910) to the V.C.I.
5. Connect M.U.T.-III main harness A to the diagnosis connector of the vehicle.
6. Turn the V.C.I. power switch to the "ON" position.

   NOTE: When the V.C.I. is energised, the V.C.I. indicator lamp will be illuminated in a green colour.
7. Start the M.U.T.-III system on the personal computer and turn the ignition switch to the "ON" position.

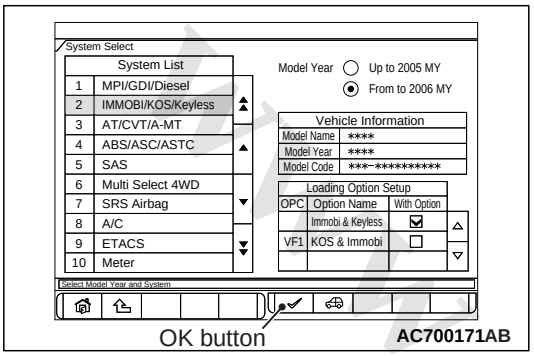

8. Select "IMMOBI/KOS/Keyless" button from the "System Select" screen. Then, select the applicable option code item and push the OK button.
   - For vehicles with KOS, select "KOS&Immobi." For vehicles with WCM, select "Immobi&Keyless."
9. Select "Coding" on the next screen.

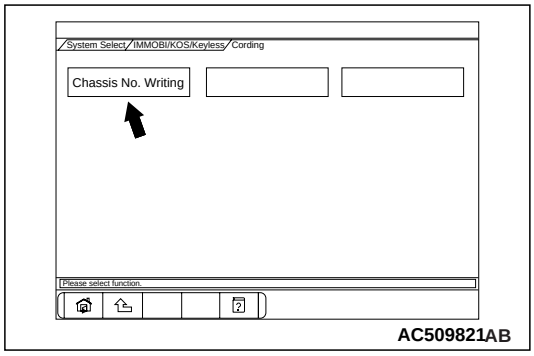

10. Select "Chassis No. Writing" on "Coding" screen.

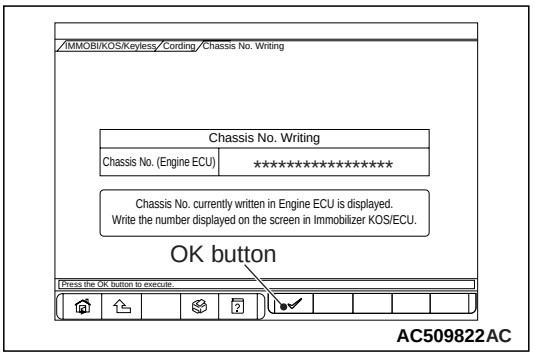

11. Push the OK button after the Chassis No. written in the engine-ECU is displayed.
12. Push the OK button after "Chassis No. Writing will start. Are you sure?" is displayed.
13. Push the OK button after "Completed." is displayed.

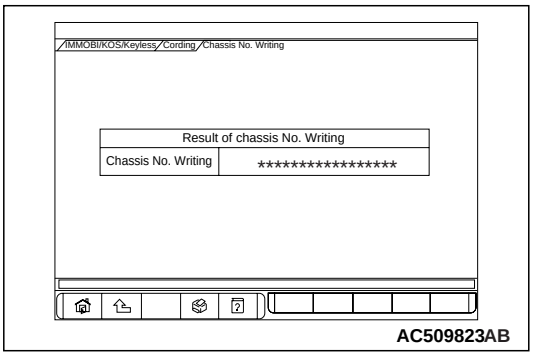

14. Result of Chassis No. writing is displayed.
15. Resister the other ID code. (Refer to GROUP 42B, Troubleshooting – ID Code Registration Judgment Table <Vehicles with KOS> or GROUP 42C, Troubleshooting – ID Code Registration Judgment Table <Vehicles with WCM>.)

CODING LIST

M1001015001770

⚠ CAUTION

With the ETACS functions being customised, if any of the ETACS-ECU variant coding and option coding items are changed, the customised contents are reset. In such case, the functions need to be recustomised.

Before troubleshooting, check that the coding data written into the engine-ECU and ETACS-ECU are normal. If they are not the same as the initial settings, various functions and systems do not work normally.

VARIANT CODING

The coding data can be checked by operating M.U.T.-III.

www.cargeek.ir

www.CarGeek.ir

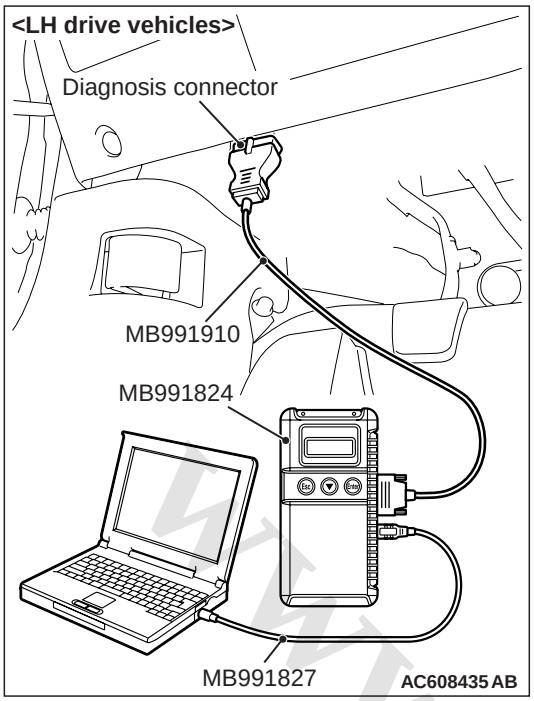

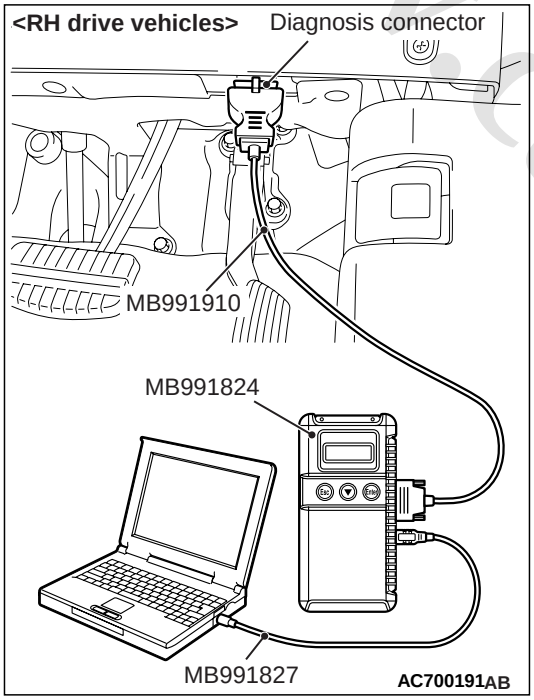

NOTE: For details on how to use the M.U.T.-III, refer to the "M.U.T.-III operation manual."

1. Ensure that the ignition switch is at the "LOCK" (OFF) position.
2. Start up the personal computer.

ENGINE-ECU CODING DATA LIST

NOTE: The items to be displayed may differ depending on the version of the M.U.T.-III.

3. Connect special tool M.U.T.-III USB cable (MB991827) to V.C.I. (MB991824) and the personal computer.
4. Connect special tool M.U.T.-III main harness A (MB991910) to the V.C.I.
5. Connect the M.U.T.-III main harness A to the diagnosis connector of the vehicle.
6. Turn the V.C.I. power switch to the "ON" position.

   NOTE: When the V.C.I. is energized, the V.C.I. indicator lamp will be illuminated in a green colour.
7. Start the M.U.T.-III system on the personal computer and turn the ignition switch to the "ON" position.
8. On the system selection screen, select "MPI/GDI/DIESEL" to check the engine-ECU data, and "ETACS" to check the ETACS-ECU data.
9. Select "Coding."
10. Select "Coding Information & Copy."
11. If the displayed coding information is different from the corresponding initial setting in the list, replace the ECU with a correctly coded one. To replace the engine-ECU, refer to GROUP 13A – Engine-ECU <4A9> or GROUP 13B – Engine-ECU <4B10, 4B11-Non-turbo> or GROUP 13C – Engine-ECU <4N1> or GROUP 13F – Engine-ECU <4J1>. To replace the ETACS-ECU, refer to GROUP 54A – ETACS .

www.cargeek.ir

www.CarGeek.ir

<4A9, 4B1, 4J1>

Item name	Initial value
Final gear ratio	5MT/6MT <M/T>
	6.120 <CVT>
	4.625 <A/T>
Tyre circumference	2015mm
IMMOBILIZER	Present
ABS	Not present <Vehicles with ASC>
	Present <Vehicles without ASC>
A.S.C.	Not present <Vehicles without ASC>
	Present <Vehicles with ASC>
S/W variation	No.1 or No.2

<4N1>

Item name	Initial value
Vehicle Model <LANCER>	LANCER
Vehicle Model <LANCER SPORTBACK>	LANCER SPORTBACK
OSS	Not present
Voltage of GLOW PLUG	11.0V
Material of GLOW PLUG	Ceramic
Low Temp Fuel/F stucked Spec.	Present
DRL	Present
ABS	Not present
A.S.C.	Present
Discharge Lamp	Not present or present
T/M	M/T
Final drive	2WD
FOR COLD ZONE	Not present
IMMOBILIZER	Present
Power window(DR)	Present
Power window(AS)	Not present
Power window(RR)	Not present
Power window(RL)	Not present
Power window(BK)	Not present
Sunroof	Not present or present
ASG	Present
EPS	Present
Cruise Control	Not present or present

ETACS-ECU CODING DATA LIST

NOTE: The items to be displayed may differ depending on the version of the M.U.T.-III.

www.cargeek.ir

www.CarGeek.ir

Item name	Initial value
Vehicle line <LANCER>	LANCER
Vehicle line <LANCER SPORTBACK>	LANCER SPORTBACK
Model year	(Displays the model year)
SST oil cooling fan	Not present
Destination	EUR
Transmission <LANCER>	5MT <5M/T>
	6MT <6M/T>
	CVT <CVT>
	4AT <A/T>
Transmission <LANCER SPORTBACK>	5MT <5M/T>
	6MT <6M/T>
	CVT <CVT>
Engine type <LANCER>	1.6L D4 MPI VVT <4A92>
	1.8L MPI D4/S4 <4B10, 4J1>
	2.0L D4 MPI VVT <4B11>
	1.8L DI-DC MIVEC <4N1>
Engine type <LANCER SPORTBACK>	1.6L D4 MPI VVT <4A92>
	1.8L MPI D4/S4 <4J1>
	1.8L DI-DC MIVEC <4N1>
Engine power	Normal
Handle side	LHD or RHD
Chassis type for A.S.C. <LANCER>	Type 7 <Sporty suspension>
	Type 9 <Except sporty suspension>
	Type 10 <Vehicles for Russia>
Chassis type for A.S.C. <LANCER SPORTBACK>	Type 7 <Sporty suspension>
	Type 9 <Except sporty suspension>
OSS	Not present
Final drive	Front Drive
Transfer	2WD
IG off delay control	Disabled
Dead lock operation customize	Disabled or Enable(d.twice)
After wipe customize <LANCER>	Enabled(def.D) or Enabled(def.E)
After wipe customize <LANCER SPORTBACK>	Enabled(def.E)
Tyre circumference	2015mm
Fuel tank	Not used
DRL type	Normal DRL
Smart entry system	Not present or Type B
TPMS	Not present
Keyless entry*	Not present or Present
Airbag auto hazard	Not present

www.cargeek.ir

www.CarGeek.ir

Item name	Initial value
Immobilizer	Type A
Corner sensor	Not present or Present
Head lamp auto levelling device	Not present or Present
Oil level warning	Not present or Present
Water separate warning	Not present or Present
Speed meter scale	Not used
Idle neutral control	Not present
Security alarm sensor	Not present or Present
T/M oil cooler	Not present or Present(A)
Remote Light ON	Disabled
Side air bag	Not present or Present
ACC power auto cut	Default enabled
Number of speaker*	Premium or 6 speakers or 4 speakers
Seat material* <LANCER>	Fabric or Leather
Seat material* <LANCER SPORTBACK>	Fabric
Auto lamp control*	No/Chg Ng or Hi RLS/chg Ng
Front differential	Open
Rear differential	Undefined
Power window type	Type P4
Sunroof type	Not present or Type S1
WCM	Present
OCM	Not present
ORC	Present
A/C	Present
AUDIO*	Not present or Present
AND* <LANCER>	Not present or Present
AND <LANCER SPORTBACK>	Not present
Siren answer	Disabled
Security alarm siren	Not present or Present
CAMERA	Not present
Corner sensor control unit	Not present or Present
Electric Slide door (Left)	Not present
Electric Slide door (Right)	Not present
ETG	Not present
ESS ECU	Not present
HFM	Not present
Inteligent/Comfort washer costom <LANCER>	Enabled(def.D) or Enabled(def.E)
Inteligent/Comfort washer costom <LANCER SPORTBACK>	Enabled(def.E)

www.cargeek.ir

www.CarGeek.ir

Item name	Initial value
Head Lamp Leveling system type	Type1/No present
Rear wiper mode <LANCER>	Without Lo cntl
Rear wiper mode <LANCER SPORTBACK>	Without Lo cntl or With Lo control
KOS door entry type	Switch
Rear wiper by reverse customize <LANCER>	Disable
Rear wiper by reverse customize <LANCER SPORTBACK>	Disable or Enabled(d.FR/RR)
ABS <LANCER>	Not present or Present
ABS <LANCER SPORTBACK>	Not present
A.S.C. <LANCER>	Not present or Present
A.S.C. <LANCER SPORTBACK>	Present
Auto fold mirror	SPD/Not present or Keyless/KOS
SAS <LANCER>	Not present or Present
SAS <LANCER SPORTBACK>	Present
4WD/AWC	Not present
TCM	Not present <M/T>
	Present <A/T, CVT>
ACTV_STB	Not used
Door unlock by IG lock customize	Enabled(def.D)
Shift lock	Not present <M/T>
	Present <A/T, CVT>
EPS <LANCER>	Not present or Present
EPS <LANCER SPORTBACK>	Present
ACDAYC	Not present
Coming home light customize	Enabled(def.E)
Welcome light customize <LANCER>	Disabled or Enabled(def.D) or Enable(d.Small)
Welcome light customize <LANCER SPORTBACK>	Disabled or Enable(d.Small)
Indirect lamp	Not present
Power window Dr	Present
Power window As	Not present
Power window RR	Not present
Power window RL	Not present
ESS by stop lamp	Not present
Sunroof	Not present or Present
RLS*	Not present or Present
IG key illumination	W/o getting off or W/ getting off
Turn signal bulb	21W+21W+5W
Rear wiper <LANCER>	Disabled
Rear wiper <LANCER SPORTBACK>	Disabled or Enable
Fold mirror	Disabled or Enable

www.cargeek.ir

www.CarGeek.ir

Item name	Initial value
Head lamp	4 beams
KOS function customize by Disp.	Disabled
Head lamp washer	Disabled or Popup 1 w/ washer
Front fog lamp mode	B spec.
Front fog lamp*	Not present or Present
Rear fog lamp	Present/Chg Ng
Room lamp delay timer/door & H/L	Short
Room lamp by H/L	Disabled or Full
Gate/Trunk lamp <LANCER>	Mode-1 (trunk)
Gate/Trunk lamp <LANCER SPORTBACK>	Mode-2 (cargo)
Head lamp auto cut mode	B-spec
Head lamp auto cut	Enable
Door lock system <LANCER>	B-spec/exceptUSH or C-spec/exceptUSL or D-spec/ dead lock
Door lock system <LANCER SPORTBACK>	B-spec/exceptUSH or D-spec/dead lock
Auto door lock/unlock	Disabled
Key reminder unlock	Disabled
Horn type	Dual horn
Gate/trunk opener mode <LANCER>	Not present or Present (Type 1) or Present(Type 2)
Gate/trunk opener mode <LANCER SPORTBACK>	Present (Type 1)
Cooling fan	Relay control
Security alarm mode	Not present or A-spec
Security alarm function	NotPresent/Chg Ng or Present/Chg Ok
Pre-alarm	Not present
Multi mode RKE	Disabled or Enable
Gate/Trunk <LANCER>	Trunk type
Gate/Trunk <LANCER SPORTBACK>	Gate type
Manner switch	Not present/Chg Ng
Remote engine starter	Present/Chg Ok
Panic Alarm	Disabled
Front wiper	Speed Sensitive or Rain Sensitive
Comfort flasher type	Present/Chg OK
Room lamp centre switch	Not present
Wiper washer check bulb	Present
AUDIO/S.RADIO type <LANCER>	Undefined or AM MW/LW or AM 1kHz step
AUDIO/S.RADIO type <LANCER SPORTBACK>	Undefined or AM MW/LW or AM 1kHz step or Other
H/L levelling type	Not present or CAN com/static
AFS/ACL type	Not present or Fix bending lamp
ESS by turn lamp	Present
Compressor type*	No compressor or Scroll 60 cc or Scroll 90 cc

www.cargeek.ir

www.CarGeek.ir

Item name	Initial value
Temperature type	Celsius
Rear view camera	Not present
Nose view camera	Not present
Left side view camera	Not present
Average speed	Available
Vehicle language status <LANCER>	English or Russian
Vehicle language status <LANCER SPORTBACK>	English
Fuel amount	Not used
Fuel consumption scale	L/100km or MPG (UK)
Seat belt reminder logic	Except EU
Coolant temp gauge threshold	Normal or Hot
Frost warning threshold	EUR
Distance to empty	Available
Average fuel consumption	Available
Instant fuel consumption	Available
Time travelled	Not available
Distance travelled	Not available
Fuel used	Not available
Trip autoreset IG OFF	Available
Variable speed alarm	Not available
Rest reminder	Available
Instant speed	Not available
Seat belt reminder control type	Non AABT
Seat belt reminder flashing	Available
Seat belt reminder indicator	D and P independent
Reverse alarm	Not available
Key reminder	Not available
Lighting monitor	Available
GCC speed alarm	Not available
Condition buzzer	Not available
Rent-a-car mode IG-OFF always	Available
Rent-a-car mode IG-OFF door open	Available
Service reminder schedule table	GCC/EXP 10 <Vehicles for Iran (LANCER) and Lebanon (LANCER SPORTBACK)>
	EU 10 <4N1>
	EU 11 <except 4N1>
GCC speed alarm indicator	Not present
TPMS information	N/A
Horn chirp by keyless	NotPresent/Chg Ng
Rear S/R unlock output	Not present

www.cargeek.ir

www.CarGeek.ir

Item name	Initial value
Trailer turn detection	Present
Shift Lever	Not present
AFS/ACL/Leveling	Not present or Present
Satellite radio	Not present
Auto Stop & Go (AS&G)	Not present or Present
Display opening type	MMC
GSI system	Not present or Present
DRL function*	NotPresent/Chg Ok or Present/Chg Ok
FACU	Not present
S-AWC control display	Not available
Diesel particulate filter	Not present or Present
Language mode	Available
WSS	Not present
Door Unlock Mode Customize*	Disabled or Enable
RLS overwipe type	Type 1
RLS WS type	Type 2 (Green)
Launch gear block alarm	Not present
Interior illumination customize	Disabled
Security sensor gain setting	Type 1 or Type 5 or Type 6

NOTE:

- **: The setting can be changed by the option coding.*

OPTION CODING

⚠ CAUTION

- **If there is any item indicated by the option coding after equipment change, set ETACS-ECU so that the option coding data corresponds with the equipment content. Pay attention to that the concerned functions and systems do not work normally if the setting does not correspond with the equipment.**
- **With the ETACS functions being customised, if any of the ETACS-ECU option coding items are changed, the customised contents are reset. In such case, the functions need to be recustomised.**

The engine-ECU <4A9, 4B1, 4J1> or ETACS-ECU option coding data can be checked or changed by operating M.U.T.-III.

- How to check option coding data
  1. Connect the M.U.T.-III. Refer to .
  2. Select "MPI/GDI/DIESEL" <4A9, 4B1, 4J1> or "ETACS" on the system selection screen.
  3. Select "Coding."
  4. Select "Option Coding Information."
  5. Check the displayed option coding information.
- How to change option coding data
  1. Connect the M.U.T.-III. Refer to .
  2. Select "MPI/GDI/DIESEL" <4A9, 4B1, 4J1> or "ETACS" on the system selection screen.
  3. Select "Coding."
  4. Select "Option Coding."
  5. Change to correct option coding data.

LIST <Engine-ECU (4A9, 4B1, 4J1)>

Item name
Cruise control

LIST <ETACS-ECU>

Item name
Auto lamp CNTL
Keyless
AUDIO (CAN)
Rain Light Sensor
AUDIO/S.RADIO type
Number of speaker
Seat material

www.cargeek.ir

www.CarGeek.ir

Item name
Front fog lamp
Rear fog lamp
Horn type
Manner switch
Remote engine starter
AND
HFM (Hands free-ECU)
Satellite radio
Compressor type
DRL function
Wiper washer check bulb
Door Unlock Mode Customize
Front wiper

PRE-INSPECTION CONDITION

M1001012100731

"Pre-inspection condition" refers to the condition that the vehicle must be in before proper engine inspection can be carried out. If you see the words "Set the vehicle to the pre-inspection condition". In this manual, it means to set the vehicle to the following condition.

- Engine coolant temperature 80 to 90°C
- Lamps, electric cooling fan and all accessories: OFF
- M/T: Neutral
- A/T: P range
- CVT: P range
- TC–SST: P range

ENGINE OILS

M1001011200230

HEALTH WARNING

Prolonged and repeated contact with mineral oil will result in the removal of natural fats from the skin, leading to dryness, irritation and dermatitis. In addition, used engine oil contains potentially harmful contaminants which may cause skin cancer. Adequate means of skin protection and washing facilities must be provided.

RECOMMENDED PRECAUTIONS

The most effective precaution is to adapt working practices which prevent, as far as practicable, the risk of skin contact with mineral oils, for example by using enclosed systems for handling used engine oil and by degreasing components, where practicable, before handling them.

Other precautions:

- Avoid prolonged and repeated contact with oils, particularly used engine oils.
- Wear protective clothing, including impervious gloves where practicable.
- Avoid contaminating clothes, particularly underpants, with oil.
- Do not put oily rags in pockets, the use of overalls without pockets will avoid this.
- Do not wear heavily soiled clothing and oil-impregnated foot-wear. Overalls must be cleaned regularly and kept separately from personal clothing.
- Where there is a risk of eye contact, eye protection should be worn, for example, chemical goggles or face shields; in addition an eye wash facility should be provided.
- Obtain first aid treatment immediately for open cuts and wounds.
- Wash regularly with soap and water to ensure all oil is removed, especially before meals (skin cleansers and nail brushes will help). After cleaning, the application of preparations containing lanolin to replace the natural skin oils is advised.
- Do not use petrol, kerosine, diesel fuel, gas oil, thinners or solvents for cleaning skin.
- Use barrier creams, applying them before each work period, to help the removal of oil from the skin after work.
- If skin disorders develop, obtain medical advice without delay.

INITIALISATION PROCEDURE FOR LEARNING VALUE IN MPI ENGINE

M1001011701476

Initialise learning values in the MPI engine when one of the following service operations is performed.

- At replacing engine assembly. *
- At replacing and cleaning injector.
- At replacing and cleaning throttle body.
- At replacing detonation sensor.
- At replacing, installing and removing valve lift sensor. <4J1>
- At replacing, installing and rocker arm and camshaft assembly. <4J1>

*NOTE: *: Initialise A/T or CVT related learning value.*

www.cargeek.ir

www.CarGeek.ir

INITIALISATION PROCEDURE

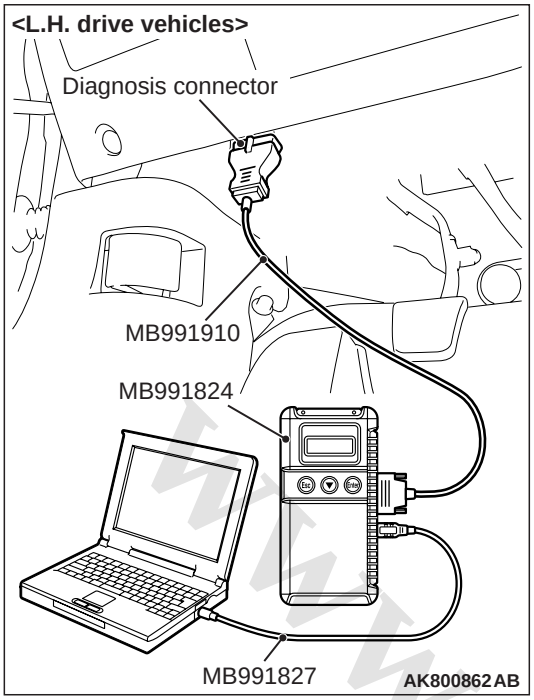

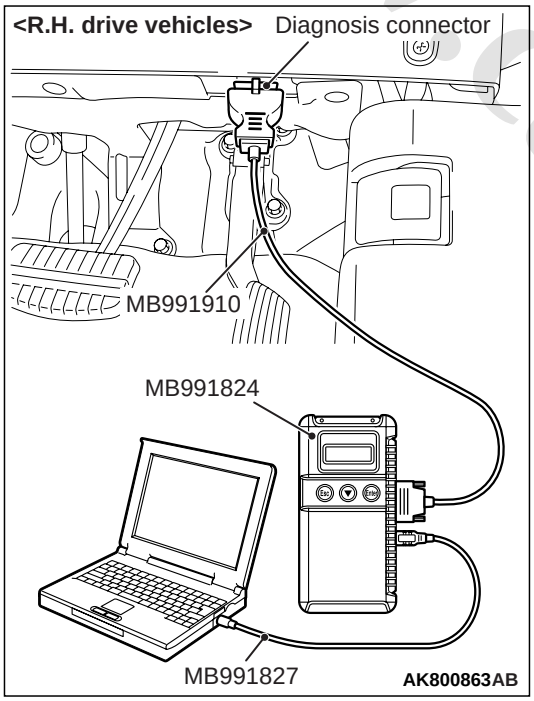

⚠ CAUTION

To prevent damage to M.U.T.-III, always turn the ignition switch to the "LOCK" (OFF) position before connecting or disconnecting M.U.T.-III.

1. After the ignition switch is in "LOCK" (OFF) position, connect the M.U.T.-III to the diagnosis connector.
2. Turn the ignition switch to the "ON" position.
3. Select "MPI/GDI/DIESEL" from System select Screen of the M.U.T.-III.
4. Select "Special Function" from MPI/GDI/DIESEL Screen.
5. Select "Learned value reset" from Special Function Screen.
6. Select "All learned value" from Learned value reset Screen
7. Initialise the learning value by pressing the "OK" button.
8. After initialising the learning value, the learning value of MPI engine idling is necessary. (refer to Learning Procedure for Idling in MPI Engine P.00-59).

LEARNING PROCEDURE FOR IDLING IN MPI ENGINE

M1001011801417

PURPOSE

When the engine-ECU is replaced, or when the learning value is initialised, the idling is not stabilized because the learning value in MPI engine is not completed. In this case, carry out the learning method for the idling through the following procedures.

LEARNING PROCEDURE

1. Start the engine and carry out the warm-up for the engine coolant temperature to reach 80°C or more.

   When the engine coolant temperature is 80°C or more, the warm-up is not needed if the ignition switch is in "ON" position once.
2. Place the ignition switch in "LOCK" (OFF) position and stop the engine.
3. After 10 seconds or more, start the engine again.
4. For 10 minutes, carry out the idling under the condition shown below and then confirm the engine has the normal idling.
   - Transmission: Neutral <M/T> or "P" range <A/T, CVT or TC-SST>
   - Operation in lamps, fan and attachments: Not to be operated
   - Engine coolant temperature: 80°C or more
   - CVT fluid temperature: 60°C or more <4J1>

   NOTE: When the engine stalls during the idling, check the dirtiness (on the throttle valve) of the throttle body and then perform the service from Procedure 1 again.

www.cargeek.ir

www.CarGeek.ir

INITIALISATION PROCEDURE FOR THROTTLE VALVE CONTROL SERVO

Disconnecting and reconnecting the battery cables causes the throttle valve closed-position value learned to be erased from the memory. This may prevent the idle speed control from being executed properly. When the battery cables have been disconnected and reconnected, initialise the throttle valve control servo in the following manner.

1. Turn the ignition switch to "ON" and then to "LOCK" (OFF).
2. Keep the ignition switch in "LOCK" (OFF) for at least 10 seconds.

SERVICING COMMON RAIL ENGINE <4N1>

M1001016400176

⚠ ***DANGER***

- ***The working near to a naked flame or sparks must be avoided.***
- ***Attention during engine running:***
  a. ***Do not work on the high pressure fuel circuit.***
  b. ***Always remain out of the way of possible fuel jet that may result in serious injuries.***
  c. ***Do not place your hand near the high pressure fuel circuit.***
- ***Attention before service:***
  a. ***After turning the ignition switch to the "LOCK" (OFF) position, wait for 30 seconds before starting any repair work. This period of time is required so that the high pressure fuel circuit pressure can get back to the atmospheric pressure.***

WHAT THE COMMON RAIL ENGINE LEARNS <4N1>

M1001012500245

After fuel-related parts are replaced, the common rail engine must register their identification codes with the engine-ECU and execute learning.
The table below shows what should be registered and learned after each type of operation.

NOTE: When the engine-ECU is replaced, collect in advance the injector identification code from the current engine-ECU. Doing it makes registration easy.

Correspondence table

Registration and learning item	Operation type		
	Injector replacement	Suction control valve or supply pump replacement	Engine-ECU replacement
Injector identification code registration	applicable	–	applicable
Small injection quantity learning	applicable	–	applicable
Supply pump correction learning	–	applicable	–

REGISTRATION AND LEARNING PROCEDURE

Injector identification code registration
Refer to P.00-61.

Small injection quantity learning
Refer to P.00-63.

Supply pump correction learning
Refer to P.00-65.

www.cargeek.ir

www.CarGeek.ir

INJECTOR IDENTIFICATION CODE REGISTRATION PROCEDURE <4N1>

M1001012600220

⚠ CAUTION

1. **If the injector identification code is not registered, the engine warning lamp goes on and diagnosis code No. P1626 is logged.**
2. **Failure to register the injector identification code correctly will cause rough idling, abnormal noise, and emission deterioration.**

PURPOSE

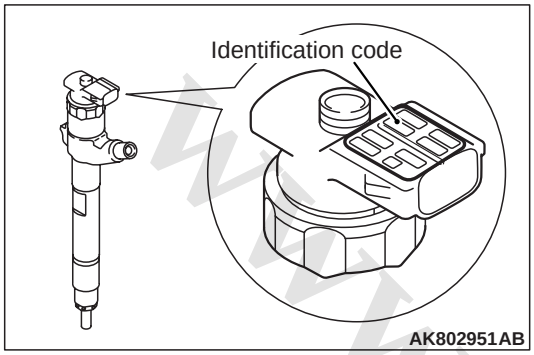

Because individual injectors have different injection characteristics, the engine-ECU corrects injection time for each cylinder to improve injection accuracy. For this reason, when the injector or engine-ECU is replaced, injector correction data must be registered afterwards in the engine-ECU using the M.U.T.-III. Correction data is converted into an identification code consisting of 30 alphanumeric characters and printed on the injector connector.

REGISTRATION PROCEDURE (DURING ENGINE ECU REPLACEMENT)

⚠ CAUTION

To prevent damage to M.U.T.-III, always turn the ignition switch to the "LOCK" (OFF) position before connecting or disconnecting M.U.T.-III.

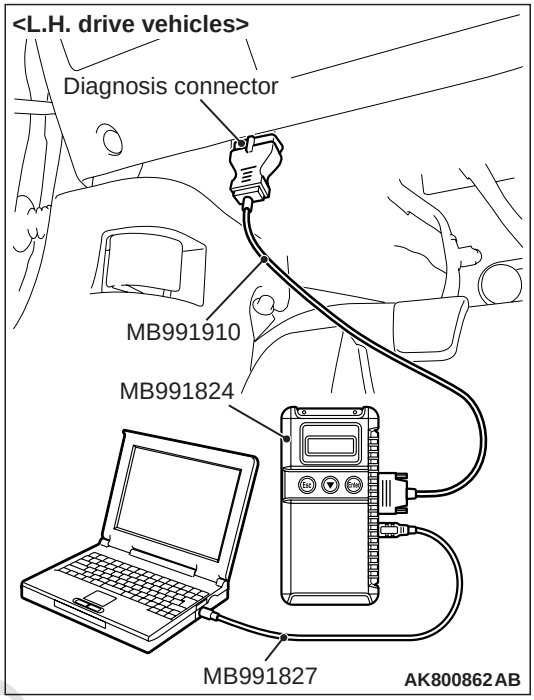

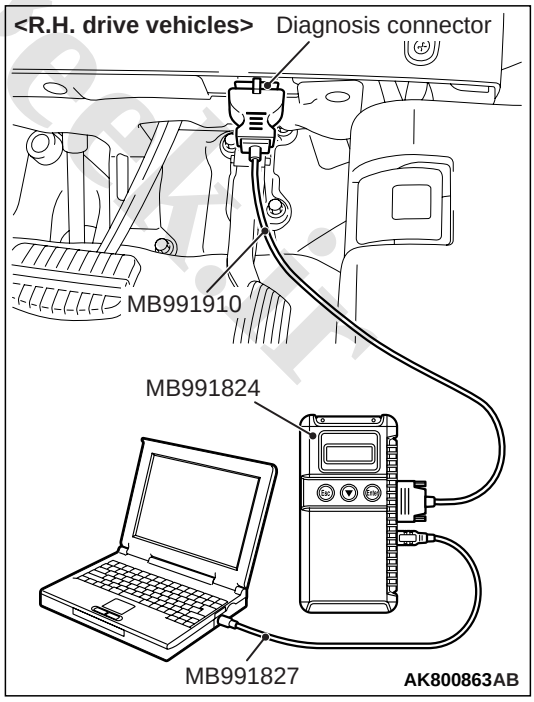

1. After the ignition switch is in "LOCK" (OFF) position, connect the M.U.T.-III to the diagnosis connector.
2. Turn the ignition switch to the "ON" position.

www.cargeek.ir

www.CarGeek.ir

3. Select "MPI/GDI/DIESEL" from System select Screen of the M.U.T.-III.
4. Select "Special Function" from MPI/GDI/DIESEL Screen.
5. Select "Inj.ID Writing (Exchanging ECU)" from Special Function Screen.
6. Select "Injector ID Read&Save" from Inj.ID Writing (Exchanging ECU) Screen to read data from the current engine-ECU and save the data.

NOTE: If the injector identification code cannot be read and cannot be stored from the engine ECU that is not replaced yet, register the identification code in the same procedures as the injector replacement.

7. Turn the ignition switch to the "LOCK" (OFF) position.
8. Replace the engine-ECU.
9. Turn the ignition switch to the "ON" position.
10. Select "MPI/GDI/DIESEL" from System select Screen of the M.U.T.-III.
11. Select "Special Function" from MPI/GDI/DIESEL Screen.
12. Select "Inj.ID Writing (Exchanging ECU)" from Special Function Screen.
13. Select "Saved Injector ID Writing " from Inj.ID Writing (Exchanging ECU) Screen to write the data, which was saved previously, to the engine-ECU.

NOTE: When the registration is completed, the lit engine warning lamp begins to blink.

14. Execute small injection quantity learning (Refer to P.00-63).
15. Confirm that the engine warning lamp is off. Confirm also that the diagnosis code is not stored.

REGISTRATION PROCEDURE (DURING INJECTOR REPLACEMENT)

NOTE: If the injector identification code cannot be read when the engine-ECU is replaced, input the identification code in the following procedures:

⚠ CAUTION

To prevent damage to M.U.T.-III, always turn the ignition switch to the "LOCK" (OFF) position before connecting or disconnecting M.U.T.-III.

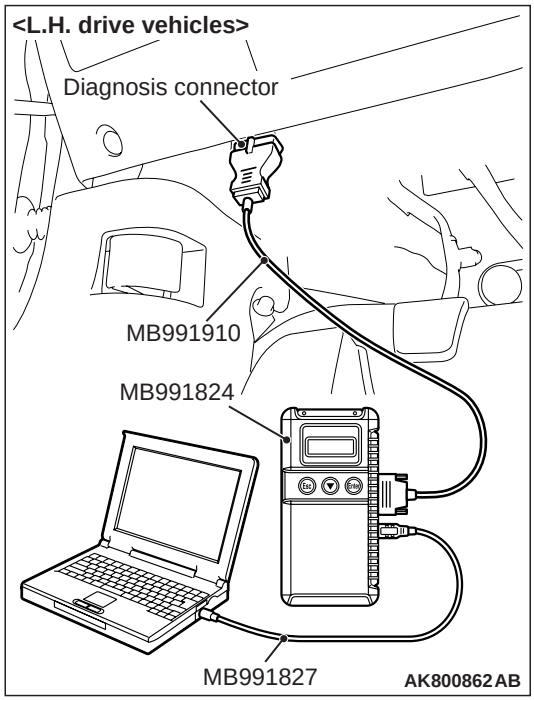

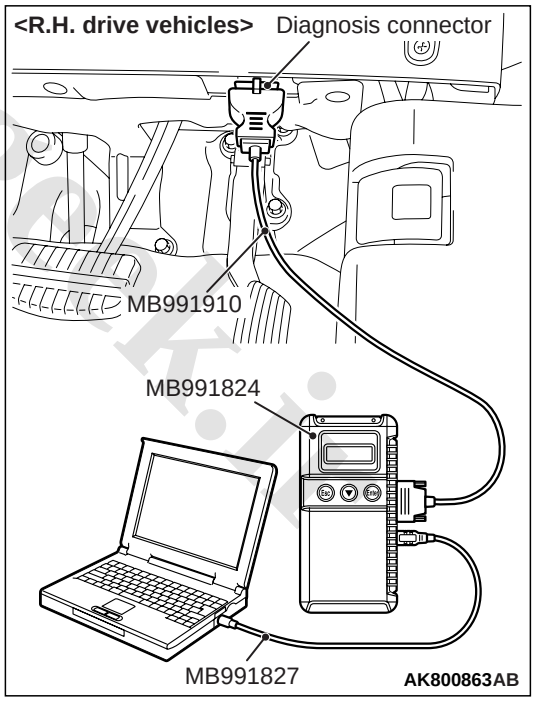

1. After the ignition switch is in "LOCK" (OFF) position, connect the M.U.T.-III to the diagnosis connector.
2. Turn the ignition switch to the "ON" position.
3. Select "MPI/GDI/DIESEL" from System select Screen of the M.U.T.-III.
4. Select "Special Function" from MPI/GDI/DIESEL Screen.

www.cargeek.ir

www.CarGeek.ir

5. Select "Inj.ID Writing (Exchanging INJ.)" from Special Function Screen.
6. From the Inj.ID Writing (Exchanging INJ.) Screen, select the injector to which the identification code is registered.

Content	M.U.T.-III registered items
No. 1 injector only registered	No. 1 Injector ID Writing
No. 2 injector only registered	No. 2 Injector ID Writing
No. 3 injector only registered	No. 3 Injector ID Writing
No. 4 injector only registered	No. 4 Injector ID Writing
All injector registered	All Injectors ID Writing

⚠ CAUTION

Even if the number of the cylinder to be registered does not match the actual injector mounting location, registration ends normally. Specify the cylinder number correctly.

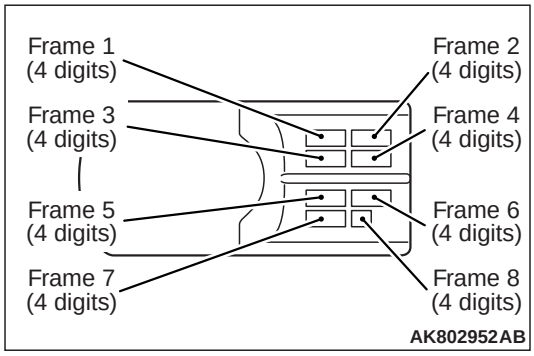

7. Register the injector identification code. Input the identification code printed on the upper plane of the injector.

NOTE: The identification code is divided into eight parts. Input the identification code into the specified parts.

8. Push "OK" to register it.

NOTE: When the registration is completed, the lit engine warning lamp should begin to blink.

9. Execute small injection quantity learning (Refer to P.00-63).

NOTE: When the injector is replaced, executing the write operation clears the values of small injection quantity learning.

10. Confirm that the engine warning lamp is off. Confirm also that the diagnosis code is not stored.

SMALL INJECTION QUANTITY LEARNING PROCEDURE <4N1>

M1001014300300

⚠ CAUTION

1. **If small injection quantity learning has not been executed, the engine warning lamp blinks.**
2. **When the requirements for learning are satisfied by operation after replacement of the engine-ECU, learning is automatically executed even if no instruction is given from the M.U.T.-III. Accordingly, the malfunction indicator lamp goes off. However, the learning thus executed is tentative and limited. Be sure to complete leaning using the M.U.T.-III.**

PURPOSE

To keep emission and noise level at adequate levels, the engine-ECU must learn injector fuel injection in idle mode.

During learning, the engine-ECU calculates actual injection from each cylinder based on changes in engine speeds and corrects pilot injection control. It then keeps records of this amount of correction as a learned value.
For this reason, after the engine-ECU or injector is replaced, learning must be executed using the M.U.T.-III.

www.cargeek.ir

www.CarGeek.ir

NOTE: Engine friction changes or injector deterioration over time may cause fluctuation in pilot injection. After use over time, it may prevent injection of an accurate amount of fuel according to the indication by the engine-ECU. This is why learning must be executed again periodically.
For this reason, the engine-ECU periodically leans injection according to the cumulative mileage.
Note that making the M.U.T.-III learn again resets the cumulative mileage.

NOTE: The engine sound may change or idling engine speeds may increase during injection learning. These are not abnormalities.

LEARNING PROCEDURE

⚠ CAUTION

To prevent damage to M.U.T.-III, always turn the ignition switch to the "LOCK" (OFF) position before connecting or disconnecting M.U.T.-III.

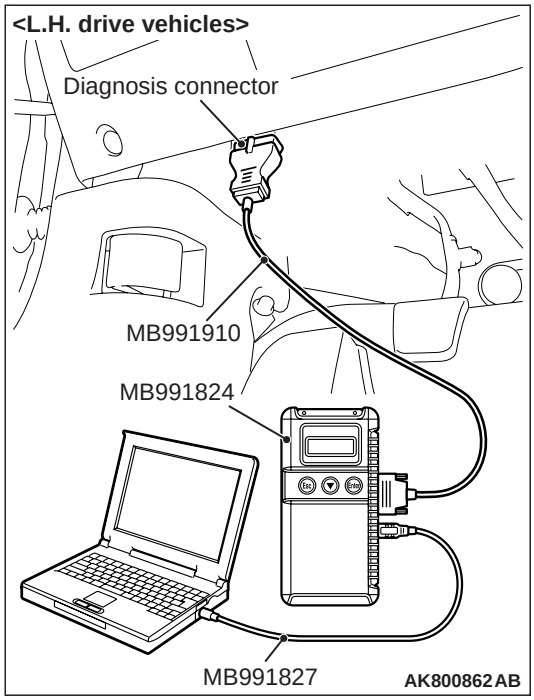

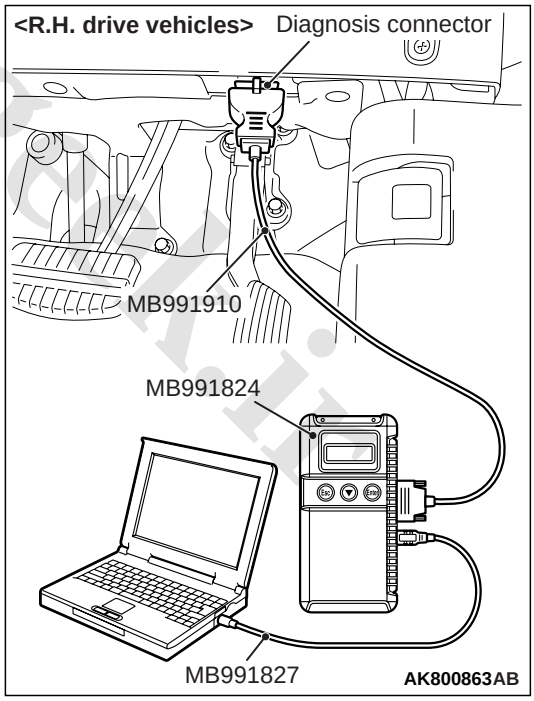

1. After the ignition switch is in "LOCK" (OFF) position, connect the M.U.T.-III to the diagnosis connector.
2. Put the vehicle in the following idling stable conditions:
   - Engine coolant temperature: 76 – 100°C
   - Fuel temperature: 30 – 100°C

www.cargeek.ir

www.CarGeek.ir

- Intake air temperature: –30 to 100°C
- Barometric pressure: 70 kPa or more
- Lamps, radiator fan and all accessories: OFF
- Transmission: Neutral
- Power steering: Static state

3. Select "MPI/GDI/DIESEL" from System select Screen of the M.U.T.-III.
4. Select "Special Function" from MPI/GDI/DIESEL Screen.
5. Select "Learning" from Special Function Screen.
6. Select Item No. 1 "Small Injection qt. Learning" from the Learning Screen to execute learning.

⚠ CAUTION

If the vehicle conditions go out of the learning conditions during idling, learning is interrupted.

To reexecute learning, the ignition switch must once be turned off.

7. Continue idling for about 3 minutes before learning is completed.
8. Confirm that the engine warning lamp is off. If it still blinks, reexecute learning.

SUPPLY PUMP CORRECTION LEARNING PROCEDURE <4N1>

M1001014400277

PURPOSE

The engine-ECU learns the relation between the suction control valve (linear solenoid valve) of the supply pump drive current and the fuel injection volume.

The learning value is calculated from the suction control valve drive current and the rail pressure sensor output voltage.
When the suction control valve or supply pump is replaced, therefore, this learning must be executed.
Re-learning is executed when the engine is idling after the learning value in the engine-ECU has been reset by the M.U.T.-III.

www.cargeek.ir
www.cargeek.ir

www.CarGeek.ir

LEARNING PROCEDURE

⚠ CAUTION

To prevent damage to M.U.T.-III, always turn the ignition switch to the "LOCK" (OFF) position before connecting or disconnecting M.U.T.-III.

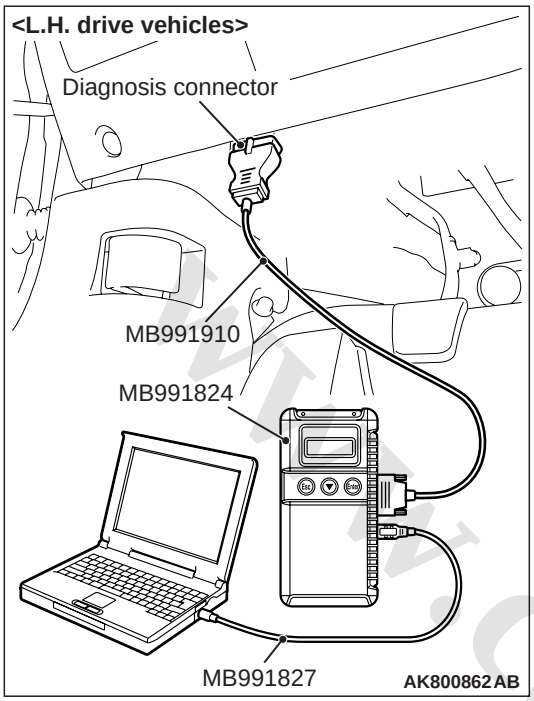

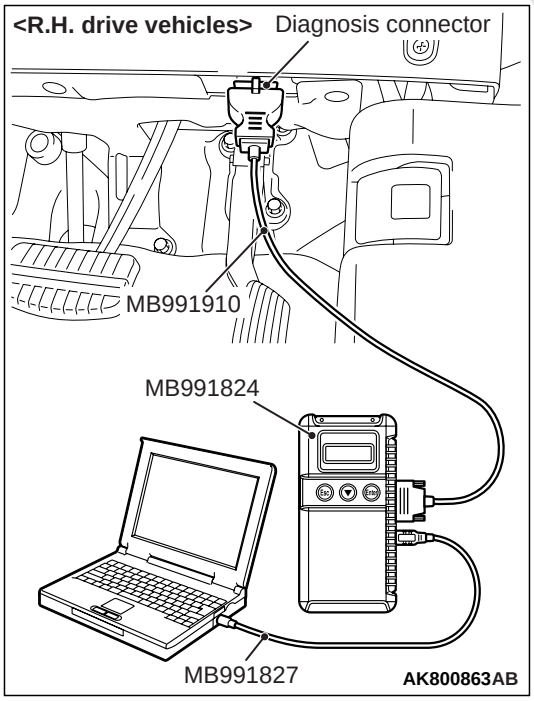

1. After the ignition switch is in "LOCK" (OFF) position, connect the M.U.T.-III to the diagnosis connector.
2. Turn the ignition switch to the "ON" position. (Do not start the engine.)
3. Select "MPI/GDI/DIESEL" from System select Screen of the M.U.T.-III.
4. Select "Special Function" from MPI/GDI/DIESEL Screen.
5. Select "Initialisation" from Special Function Screen.
6. Select Item No. 21 "Supply pump exchange service" from "Initialisation Screen and execute the initialisation of learning value.
   - Accelerator pedal: OFF (not depressed)
   - Engine coolant temperature: 60°C or higher
   - Fuel temperature: 30°C or higher
7. After initialising, run the engine at idle in the following conditions for 30 seconds.
8. Confirm that the Item No. 65 "High press. pump learned status" on M.U.T.-III Data List is "2".

NOTE: "2" indicates that the learning has completed.

www.cargeek.ir

www.CarGeek.ir

INITIALISATION PROCEDURE FOR LEARNING VALUE IN COMMON RAIL ENGINE <4N1>

M1001017800070

⚠ CAUTION

If the following services shown in the table are carried out on the common rail engine, use the M.U.T.-III to initialise the learning value. This is essential to early and correctly operate the exhaust gas processing system.

Initialising items

Service items	Initialisation item	Forcible DPF regeneration
At replacing supply pump *	No. 21 Supply pump exchange service	–
At replacing diesel particulate filter (DPF)	No. 40 DPF exchange service	–
At replacing exhaust differential pressure sensor	No. 41 DPF dp sensor exchange service	Necessary
At replacing catalytic converter	No. 42 DPF system malfunction service	Necessary
At replacing engine oil (Only in storing DTC P252F)	No. 43 Engine oil exchange service	–
At replacing EGR cooler	No. 53 Fuel consumption initialized	–

*NOTE: *: After Initialising the learning value, carry out the supply pump correction learning in order to replace the supply pump. (Refer to P.00-65).*

www.cargeek.ir

www.cargeek.ir

www.CarGeek.ir

INITIALISATION PROCEDURE

⚠ CAUTION

To prevent damage to M.U.T.-III, always turn the ignition switch to the "LOCK" (OFF) position before connecting or disconnecting M.U.T.-III.

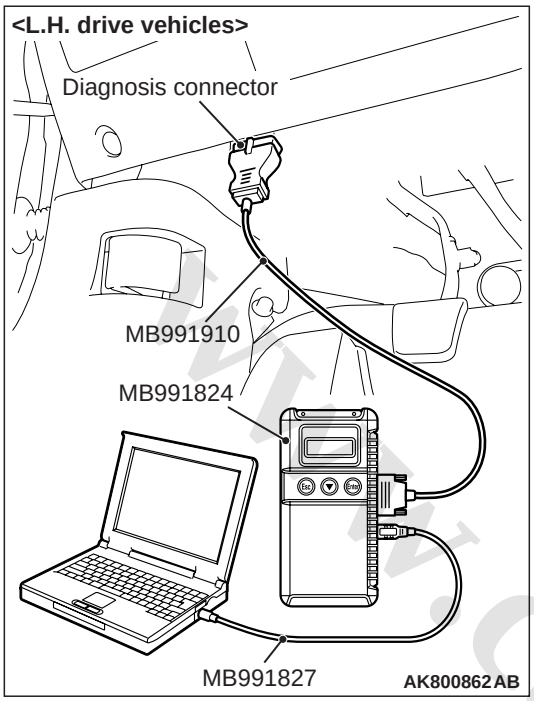

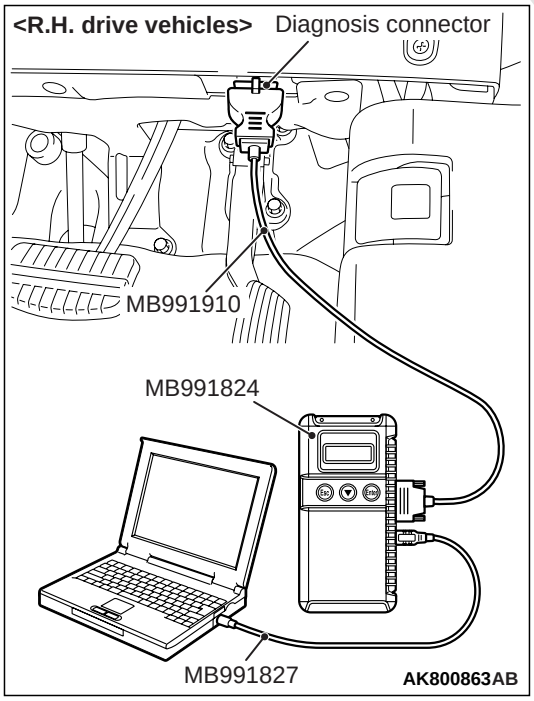

1. After the ignition switch is in "LOCK" (OFF) position, connect the M.U.T.-III to the diagnosis connector.
2. Turn the ignition switch to the "ON" position. (Do not start the engine.)
3. Select "MPI/GDI/DIESEL" from System select Screen of the M.U.T.-III.
4. Select "Special Function" from MPI/GDI/DIESEL Screen.
5. Select "Initialization" from Special Function Screen.
6. Select the appropriate initialising item from the Initialization Screen to initialise it.
7. Use M.U.T.-III to carry out the forcible DPF regeneration. [Refer to GROUP 17 – Emission Control <DIESEL> – Diesel Particulate Filter (DPF) System – Forcible DPF Regeneration].

BATTERY CURRENT SENSOR CALIBRATION <Low CO_2 specification, FFV, 4N1, 4J1>

M1001018600251

PURPOSE

The engine-ECU carries out the electrical generation control according to the charge level of the battery, based on the battery current sensor signal. To improve the effect of reducing the fuel consumption by the electrical generation control, it is necessary to accurately detect the charge level of the battery. For this, if the following services are performed, carry out the battery current sensor calibration.

- Replacing the battery current sensor
- Replacing the engine-ECU

LEARNING PROCEDURE

1. After the ignition switch is in "LOCK" (OFF) position, disconnect the battery cable from the negative battery terminal.

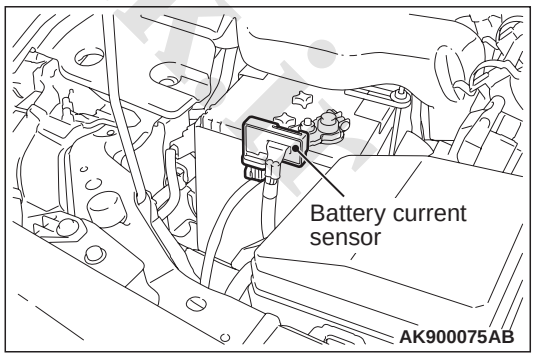

2. Remove the battery current sensor from the battery cable (Do not disconnect the battery current sensor connector).
3. Connect the battery cable without the battery current sensor to the negative battery terminal.

www.cargeek.ir

www.CarGeek.ir

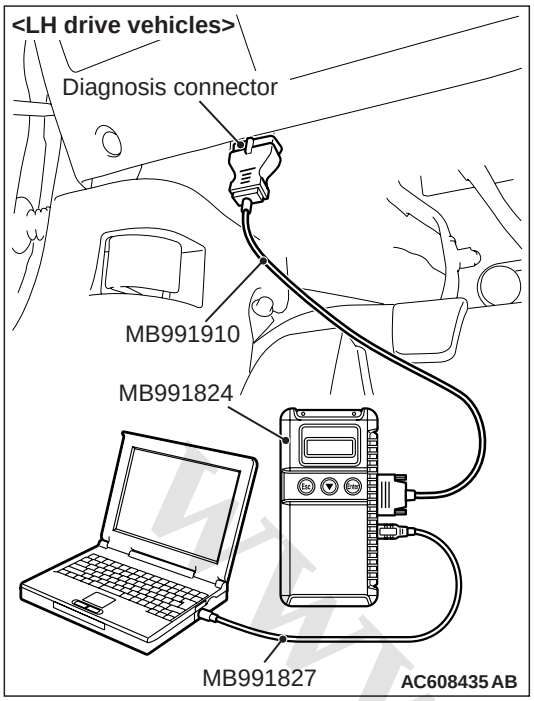

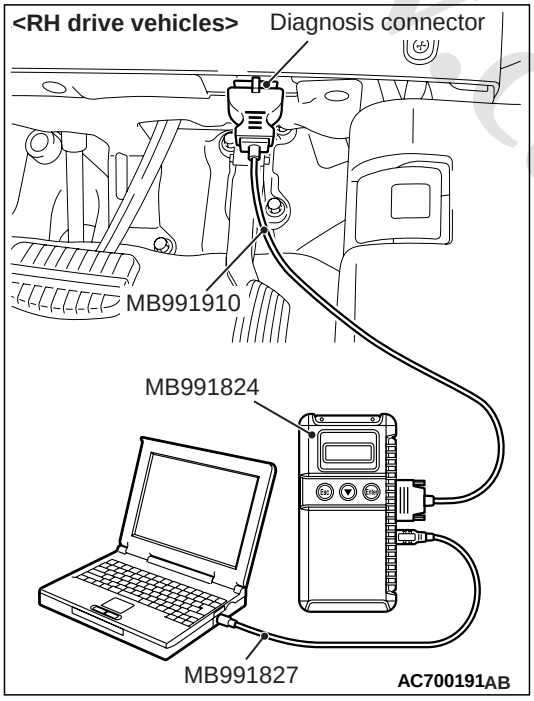

4. Connect the M.U.T.-III to the diagnosis connector (But do not start the engine).
5. Turn the ignition switch to the ON position.
6. Select "MPI/GDI/DIESEL" from System select Screen of the M.U.T.-III.
7. Select "Special Function" from MPI/GDI/DIESEL Screen.
8. Select "Learning" from Special Function Screen.
9. Select "Battery current SNSR.calibration" from Learning Screen.
10. Start the calibration by pressing the "OK" button.
11. Confirm that the M.U.T.-III data list item No. 119 <Low CO_2 specification, FFV> No. 452 <4N1> Battery current sensor calibration is "Completed".
12. After the ignition switch is in "LOCK" (OFF) position, disconnect the M.U.T.-III.
13. Install the battery current sensor.

FORCED LEARNING OF ESTIMATED ETHANOL CONCENTRATION <FFV>

M1001018200048

PURPOSE

When carrying out the learning of the estimated ethanol concentration every time the engine starts or the fuel is supplied, the Flexible Fuel Vehicle (FFV) controls the injection amount according to the ethanol concentration in the fuel tank. The difference, however, arises between the ethanol concentration stored by the engine-ECU and the actual ethanol concentration when performing the following driving or work. This can possibly impact on the poor cold engine starting or the drivability in the cold state. Using the M.U.T.-III, this malfunction can be solved by carrying out the forced learning of the estimated ethanol concentration.

- Repeating the short distance run that cannot switch to the estimating concentration mode.
- Replacing the fuel of the fuel tank
- Outputting the diagnosis code
- Replacing the fuel gauge unit and the fuel supply line
- Replacing the engine-ECU

www.cargeek.ir

www.CarGeek.ir

LEARNING PROCEDURE

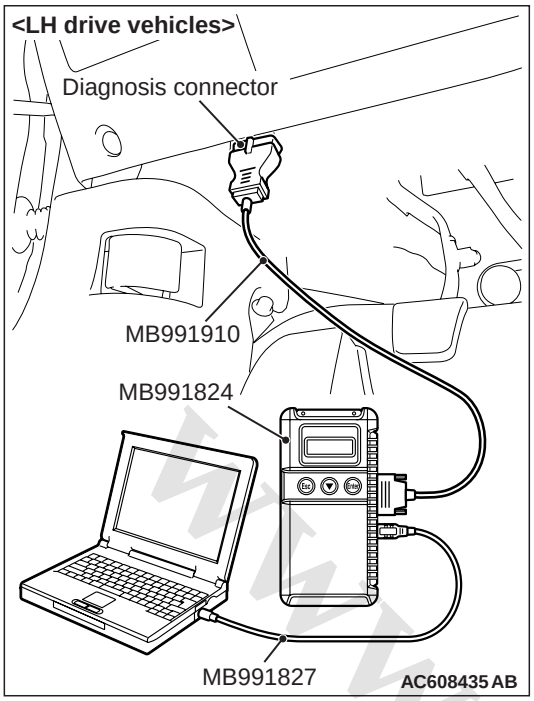

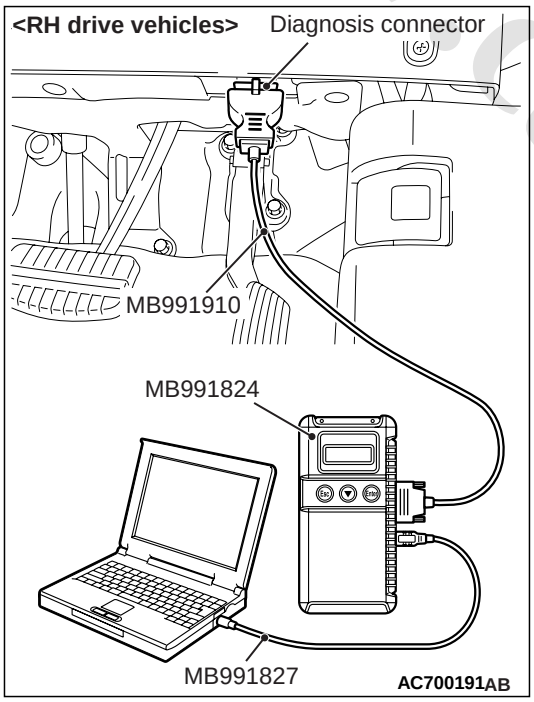

NOTE: Confirm that the diagnosis code is not output by the engine-ECU before performing the forced learning of the estimated ethanol concentration. If the diagnosis code is output, carry out the work after solving the malfunction.

1. After the ignition switch is in "LOCK" (OFF) position, connect the M.U.T.-III to the diagnosis connector.
2. After confirming that the engine control relay is in the OFF position, start the engine.
3. Select "MPI/GDI/DIESEL" from System select Screen of the M.U.T.-III.
4. Select "Special Function" from MPI/GDI/DIESEL Screen.
5. Select "Learning" from Special Function Screen.
6. Select "Ethanol forced learning mode" from Learning Screen
7. Press the "OK" button and drive the vehicle for approximately 15 minutes.
8. Confirm that the M.U.T.-III data list item No. 120 Ethanol percentage learning is "Completed". If it is "Not completed", drive the vehicle for several minutes more.

TIMING CHAIN MAINTENANCE <4B11-Turbo>

M1001016500292

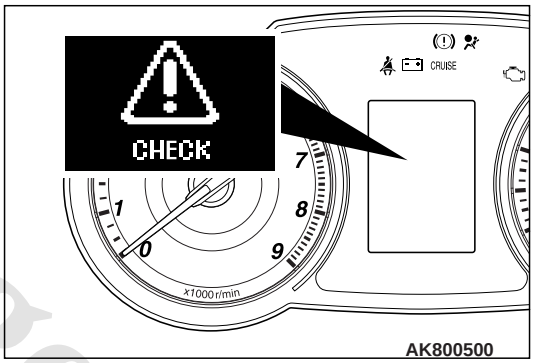

If the vehicle equipped with 4B11-turbo engine continues the rough driving like competitive running*1, the amount of carbon mixed into the engine oil tends to increase. This can possibly cause the timing chain to gradually elongate. To prevent this, the function or logic monitoring the amount of elongation of the timing chain is integrated into the engine-ECU. When the engine-ECU detects the elongation of the timing chain, the warning is shown on the multi-information display of combination meter as shown in the illustration. This gives the driver the information that the visual check of the elongation of the timing chain is necessary. If this warning is continuously neglected, the timing chain can possibly interfere with the other engine components, resulting in the engine damaged.

*NOTE: *1: The competitive running means the running that constantly repeats the cycle of the full opened position of the accelerator pedal and the full closed position of the accelerator pedal.*

www.cargeek.ir

www.CarGeek.ir

The engine-ECU stores the timing chain conditions as the initial learning value when the timing chain is installed. The engine-ECU stores the amount of elongation of the timing chain in the EEPROM as the current learning value, compared with the initial learning value. The engine-ECU judges that the visual check of the elongation of the timing chain is necessary when the current learning value exceeds the specified value. Thus, use the M.U.T.-III to always carry out the maintenance of the initial learning value related to the timing chain that is stored by the engine-ECU after the following service.

Service	**Maintenance items by M.U.T.-III**	**Maintenance purpose**
Engine-ECU replacement	• Learned value Read&Save *2 • Write learned value (Changed ECU)*2	The purpose is that the initial learning value regarding the amount of elongation of the timing chain stored by the current engine-ECU is loaded in the M.U.T.-III, and then written into the new engine-ECU. This allows the engine-ECU to appropriately monitor the amount of elongation of the timing chain after the engine-ECU replacement.
Visual check of elongation of timing chain	Learned value reset	The purpose is that the initial learning value stored by the current engine-ECU is initialised after the visual check of the elongation of the timing chain by illuminating the warning lamp, whether or not the timing chain is replaced. This allows the engine-ECU to appropriately monitor the amount of elongation of the timing chain.
Timing chain or engine assembly replaced	Learned value reset	The purpose of this procedure is that the initial learning value stored by the current engine-ECU is initialised when the timing chain or the engine assembly (the timing chain is also replaced with a new one.) is replaced. This allows the engine-ECU to appropriately monitor the amount of elongation of the timing chain.

*NOTE: *2: The visual check of the elongation of the timing chain must be carried out under the following conditions: when the initial learning value cannot be written into M.U.T.-III from the current engine-ECU because of the engine-ECU malfunction and when the initial learning value cannot be written into the new engine-ECU (Refer to GROUP 11I – On-vehicle Service – Timing Chain Elongation Visual Check). If elongated more than the specified length at this time, the timing chain can possibly interferes with the other engine components before the new engine-ECU detects the elongation of the timing chain. The timing chain must be replaced with a new one to prevent engine damage.*

www.cargeek.ir

www.CarGeek.ir

LEARNED VALUE READ&SAVE AND WRITE LEARNED VALUE (CHANGED ECU)

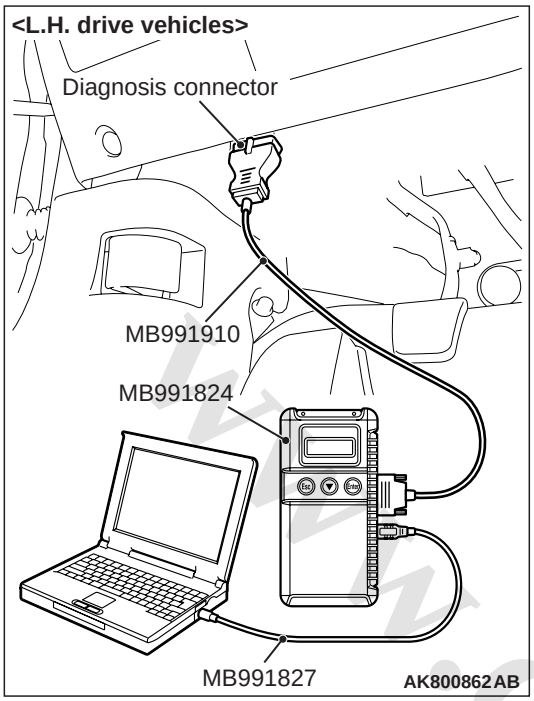

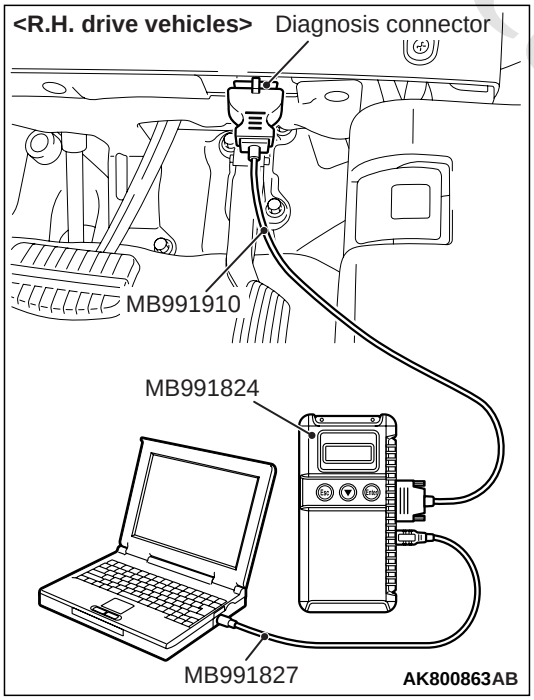

1. After the ignition switch is in "LOCK" (OFF) position, connect the M.U.T.-III to the diagnosis connector.
2. Turn the ignition switch to the "ON" position.
3. Select "MPI/GDI/DIESEL" from System select Screen of the M.U.T.-III.
4. Select "Special Function" from MPI/GDI/DIESEL Screen.
5. Select "Timing chain maintenance" from Special Function Screen.
6. Select "Learned value Read&Save" from Timing chain maintenance Screen.
7. Press "OK" to store the initial learning value file.

NOTE: When the initial learning value file is appropriately stored, "Learned value Save Complete" is shown on the screen of the M.U.T.-III.

NOTE: Calculating the amount of elongation of the timing chain by the engine-ECU takes the time. Thus, the file cannot be stored for a while after the engine-ECU initialisation or replacement.

8. Replace the engine-ECU.
9. Select "Write learned value (Changed ECU)" from Timing chain maintenance Screen.
10. Select the initial learning value file stored during Step 7 to write the initial learning value.

NOTE: Use only the initial learning value file stored during Step 7 without using any other files.

NOTE: When the initial learning value is appropriately written, "Learned value writing Completed." is shown on the screen of the M.U.T.-III.

www.cargeek.ir

www.CarGeek.ir

LEARNED VALUE RESET

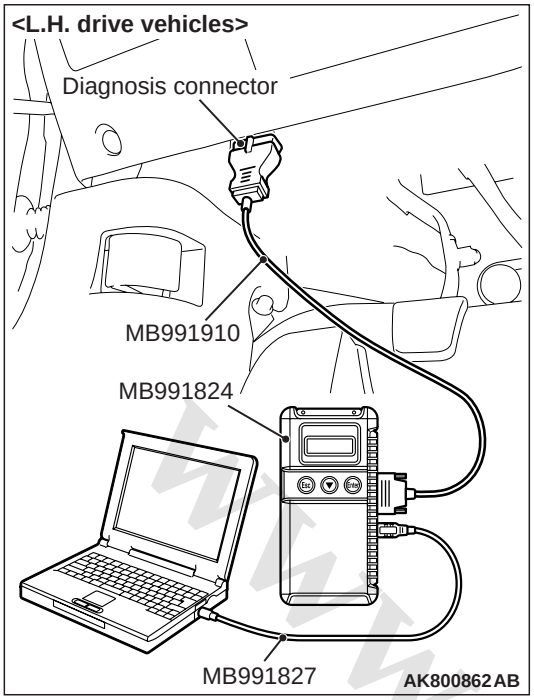

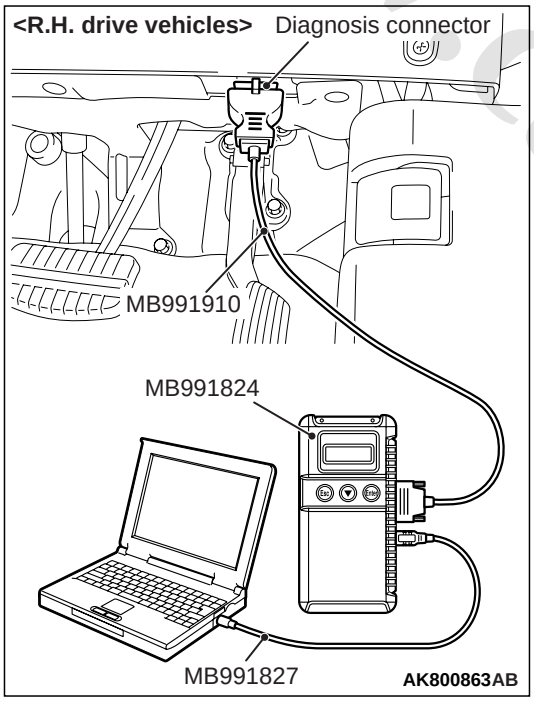

1. After the ignition switch is in "LOCK" (OFF) position, connect the M.U.T.-III to the diagnosis connector.
2. Turn the ignition switch to the "ON" position.
3. Select "MPI/GDI/DIESEL" from System select Screen of the M.U.T.-III.
4. Select "Special Function" from MPI/GDI/DIESEL Screen.
5. Select "Timing chain maintenance" from Special Function Screen.
6. Select "Learned value reset" from Timing chain maintenance Screen.
7. Press "OK" to reset the initial learning value.

TEST/LIMIT VALUE READOUT

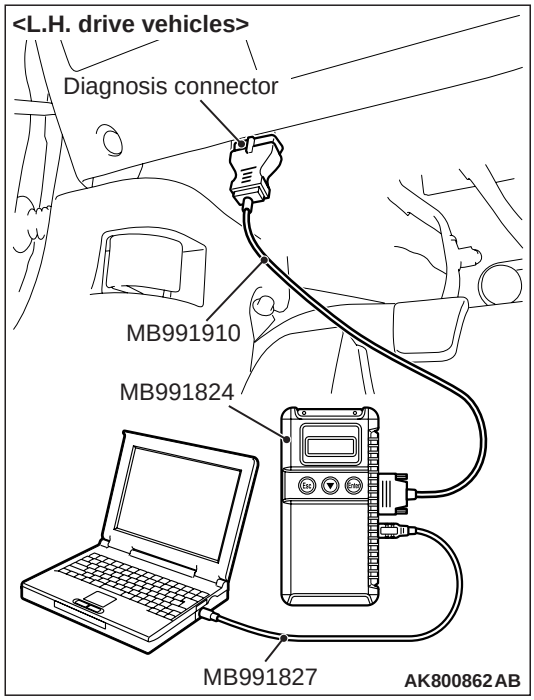

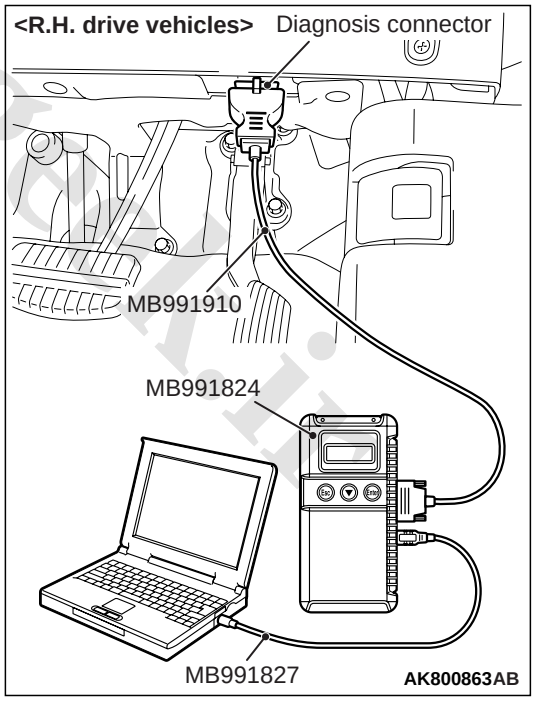

1. After the ignition switch is in "LOCK" (OFF) position, connect the M.U.T.-III to the diagnosis connector.
2. Turn the ignition switch to the "ON" position.
3. Select "MPI/GDI/DIESEL" from System select Screen of the M.U.T.-III.

www.cargeek.ir

www.CarGeek.ir

4. Select "Special Function" from MPI/GDI/DIESEL Screen.
5. Select "Timing chain maintenance" from Special Function Screen.
6. Select "Test/Limit value readout" from Timing chain maintenance Screen.
7. Read the value of percentage (%) shown on the screen.

NOTE: The value of percentage (%) shown on the screen is the amount of elongation of the timing chain calculated by the engine-ECU based on the initial learning value, and thus is not the actual amount. Use this for the reference only.

FORM–IN–PLACE GASKET (FIPG)

M1001014200132

The engine has several parts to which the form-in-place gasket (FIPG) is used. To sufficiently achieve the aims of this gasket, it is necessary to pay attention to the application amount, procedure, and surface status.
If the application amount is too small, a leakage will occur. If the application amount is excessive, the FIPG will overflow and cause a clogging or narrowing of water and oil paths. Therefore, to eliminate the leak from the joint, it is indispensable that the FIPG be applied with a correct amount and without any gap.
Because the FIPG used for the engine parts becomes hardened by the reaction with the atmospheric moisture, it is normally used for the metal flange section.

⚠ CAUTION

Reapply the FIPG with care to the followings.

1. **Completely remove the old FIPG including the residue in gaps of parts.**
2. **Using Mitsubishi genuine parts cleaner (MZ100387) or equivalent, degrease the FIPG application surface carefully.**
3. **According to the FIPG application procedures, apply it accurately.**

DISASSEMBLY

The parts installed with the FIPG can be disassembled easily without using any special method. However, in some cases, it is necessary to tear the sealant in between the mating surfaces by tapping the parts with a wooden hammer or similar tools. It is acceptable to lightly hit in a smooth, thin gasket scraper into the mating surface, but, in this case, a sufficient caution is required not to damage the mating surface. The oil pan FIPG cutter (Special tool: MD998727) is provided. Thus, use this special tool.

GASKET SURFACE CLEANING

Use a gasket scraper or wire brush to completely remove all the foreign materials adhering to the gasket surface. Check that the FIPG application surface is smooth. There must be no grease or foreign material adhesion to the gasket surface. Do not forget to remove the old FIPG remaining in the mounting hole and tapped hole.

APPLICATION PROCEDURE

Apply the FIPG with a specified diameter and without any gap. Completely enclose around the mounting hole. When the FIPG is not hardened, it can be wiped off. Install the parts immediately after applying the FIPG. At the time of installation, prevent the FIPG from adhering to locations other than it is necessary. After the installation, until a sufficient period of time (one hour or more) elapses, do not contact the oil or water to the application area. Also, do not start the engine. Because the FIPG application procedure may differ depending on the application area, apply the FIPG according to the procedure described in the text.

BOLTS AND NUTS WITH STABILIZER FOR COEFFICIENT OF FRICTION

M1001014800123

The bolts and nuts with stabilizer for coefficient of friction have been used for the connections such as the suspension arm and crossmember in order to stabilize the axial force and to ensure the high axial force at bolt/nut connections, resulting in improved reliability.

NOTE: The bolts and nuts with stabilizer for coefficient of friction mean that the bolts and nuts with surface treatment to stabilize and reduce the coefficient of friction, allowing to achieve the stable axial force and to secure the high axial force with low tightening torque.

www.cargeek.ir

www.CarGeek.ir

PRECAUTIONS FOR INSTALLATION OF ON-VEHICLE RADIO TRANSMISSION EQUIPMENT

M1001015500136

The computers (control unit) for various on-vehicle electronic equipment are provided with sufficient protective measures against external radio wave interference. However, because the on-vehicle radio transmission equipment may affect adversely the computers (control unit), pay attention to the following precautions for installation.

- Install radio transmission equipment and antenna (including coaxial cables) 200 mm or more away from the computers (control unit) for on-vehicle electronic equipment.
- Because radio wave is radiated from the coaxial cables of the antenna for radio transmission equipment, do not route the cables in parallel with the vehicle wiring harness.
- Install only radio transmission equipment with the frequencies, output, and radio wave types described in the table.

FREQUENCY, OUTPUT, AND RADIO WAVE TYPE OF THE RADIO TRANSMISSION EQUIPMENT

Frequency (MHz)	Maximum output power (W)	Modulation
3.5	50	CW, FM, AM, SSB
7		
14		
21		
28		
50		
144		
430		
1,260	2	

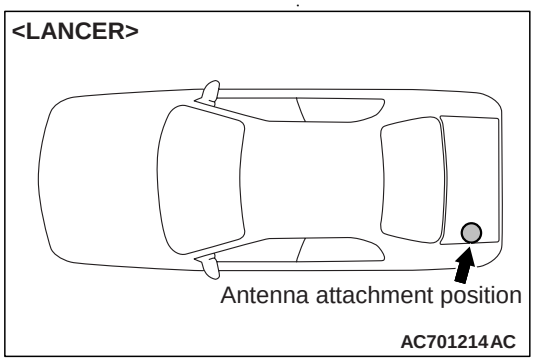

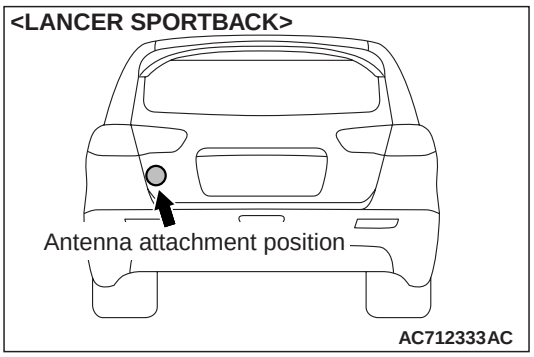

Install the antenna for radio transmission equipment only to the position shown in the figure.

APPLICATION OF ANTI-CORROSION AGENTS AND UNDERCOATS

M1001011000344

If oil or grease gets onto the oxygen sensor, it will cause a drop in the performance of the sensor. Cover the oxygen sensor with a protective cover when applying anti-corrosion agents and undercoats.

VEHICLE WASHING

M1001012000466

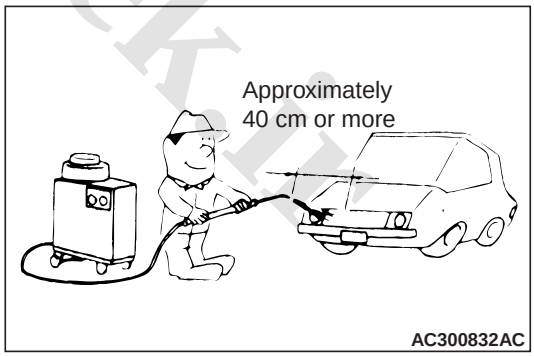

If high-pressure car-washing equipment or steam car-washing equipment is used to wash the vehicle, be sure to note the following information in order to avoid damage to plastic components, etc.

- Spray nozzle distance: Approx. 40 cm or more
- Spray pressure: 3,900 kPa or less
- Spray temperature: 82°C or less
- Time of concentrated spray to one point: within 30 sec.

www.cargeek.ir

www.CarGeek.ir

SUPPLEMENTAL RESTRAINT SYSTEM (SRS)

M1001009800934

The SRS (Supplemental Restraint System) air bag is a system that is effective with the seat belt fastened, and it is designed as a supplemental system of the seat belt. The air bag inflates upon a frontal collision or a side collision to protect the passengers.
The SRS consists of air bag modules, SRS air bag control unit (SRS-ECU), two front impact sensors, two side impact sensors, SRS warning lamp, clock spring, passenger’s air bag cut off switch, passenger’s air bag OFF indicator lamp and seat belt pre-tensioner. Front air bags are located in the centre of the steering wheel and above the glove box. Knee air bag is installed under the column cover. Side-airbags are located inside the front seatback assemblies. The curtain air bag module is installed in the roof side sections (from the driver's and the passenger's front pillars to the rear pillars). Each air bag is made up of a folded air bag and an inflator unit. The SRS-ECU under the front floor console monitors the system and has a front air bag safing G-sensor, front air bag analogue G-sensor and a side (curtain) air bag analogue G-sensor. The front impact sensor is installed on the front end upper bar in the engine room and contains an analogue G-sensor and a microcomputer. The side impact sensor is installed in the lower parts of the centre pillars and contains an analogue G-sensor and a microcomputer. The warning lamp on the instrument panel indicates the operational status of the SRS. The clock spring is installed in the steering column. The passenger’s air bag cut off switch is located above inside the glove box. The passenger’s air bag OFF indicator lamp is installed in instrument centre panel. The seat belt pre-tensioner is built into the driver's and passenger's front seat belt retractor.
Only authorized service personnel should do work on or around the SRS components. Those service personnel should read this manual carefully before starting any such work.

www.cargeek.ir
www.cargeek.ir

www.CarGeek.ir

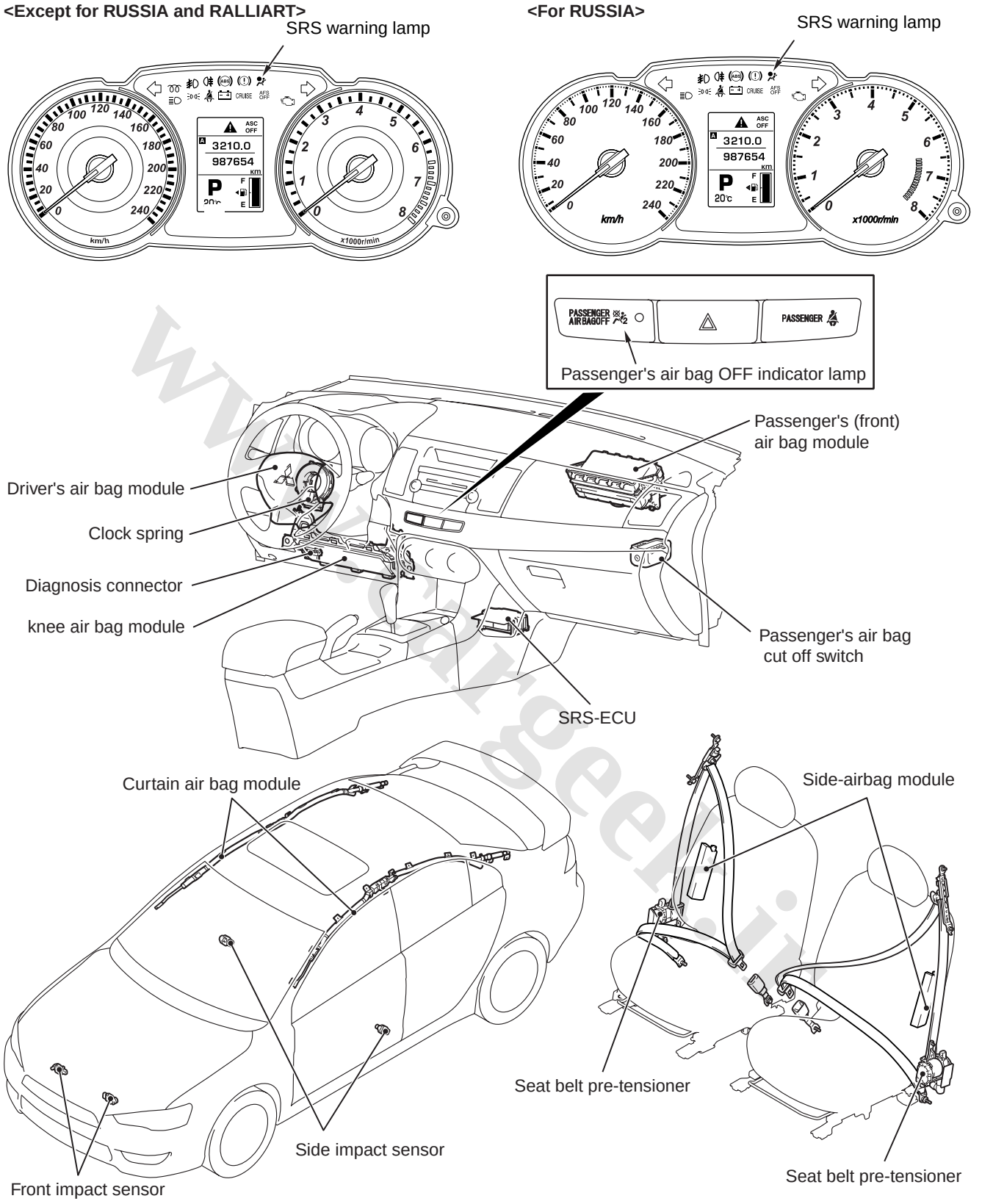

www.cargeek.ir

www.CarGeek.ir

<RALLIART>

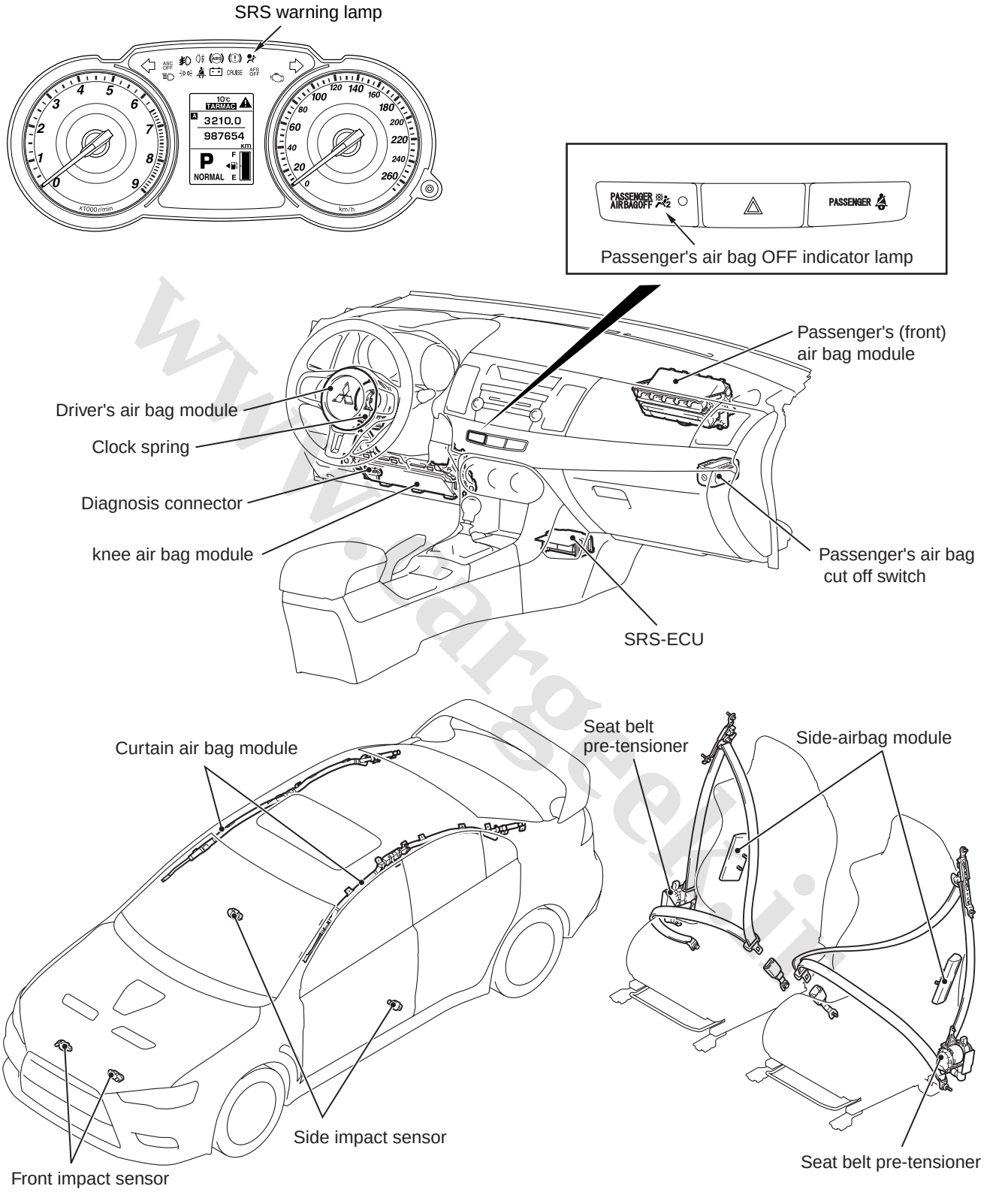

www.cargeek.ir

www.CarGeek.ir

SRS SERVICE PRECAUTIONS

M1001006000887

1. **In order to avoid injury to yourself or others from accidental deployment of the SRS air bag during servicing, read and carefully follow all the precautions and procedures described in this manual.**
2. **Be sure to use the tester and special tools specified in this manual (Special tool: refer to , tester: refer to).**
3. **Never attempt to repair the following components:**
   - **SRS-ECU**
   - **Driver's air bag module**
   - **Clock spring**
   - **Passenger's (front) air bag module**
   - **Knee air bag module**
   - **Curtain air bag module**
   - **Front seat assembly incorporating side-air-bag module**
   - **Seat belt with pre-tensioner**
   - **Front impact sensor**
   - **Side impact sensor**

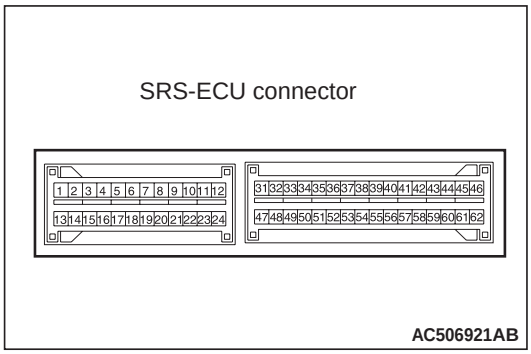

4. **Never attempt to repair the wiring harness connectors of the SRS. If a defective wiring harness is found, repair or replace it by referring to the table follows.**

SRS-ECU terminal No.	Destination of wiring harness	Measures
1, 2	Instrument panel wiring harness → knee air bag module	Repair or replace the instrument panel wiring harness.
5, 6	Instrument panel wiring harness → clock spring → driver's air bag module (1st squib)	Replace the clock spring, or repair or replace the instrument panel wiring harness.
7, 8	Instrument panel wiring harness → passenger's (front) air bag module (1st squib)	Repair or replace the instrument panel wiring harness.
9, 10	Instrument panel wiring harness → clock spring → driver's air bag module (2nd squib)	Replace the clock spring, or repair or replace the instrument panel wiring harness.
11, 12	Instrument panel wiring harness → passenger's (front) air bag module (2nd squib)	Repair or replace the instrument panel wiring harness.
15, 16	Instrument panel wiring harness → CAN bus line	
17	Instrument panel wiring harness → earth	
18	Instrument panel wiring harness → Instrument centre panel	Repair or replace the instrument panel wiring harness.
19, 20	Instrument panel wiring harness → passenger's air bag cut off switch	
21, 22	Instrument panel wiring harness → front wiring harness → front impact sensor wiring harness → front impact sensor (LH)	Repair or replace the wiring harnesses.
23, 24	Instrument panel wiring harness → front wiring harness → front impact sensor wiring harness → front impact sensor (RH)	

www.cargeek.ir

www.CarGeek.ir

SRS-ECU terminal No.	Destination of wiring harness	Measures
31, 32	Floor wiring harness → side-airbag module (LH)	Repair or replace the floor wiring harness.
33, 34	Floor wiring harness → side-airbag module (RH)	
39, 40	Floor wiring harness → rear floor wiring harness (RH) → curtain air bag module (RH)	Repair or replace the wiring harnesses.
41, 42	Floor wiring harness → rear floor wiring harness (LH) → curtain air bag module (LH)	
43, 44	Floor wiring harness → front passenger's seat belt pre-tensioner	Repair or replace the floor wiring harness.
45, 46	Floor wiring harness → driver's seat belt pre-tensioner	
49, 50	Floor wiring harness → side impact sensor (LH)	
51, 52	Floor wiring harness → side impact sensor (RH)	
61	Floor wiring harness → ETACS-ECU (fuse No. 18)	
62	Floor wiring harness → ETACS-ECU (fuse No. 12)	

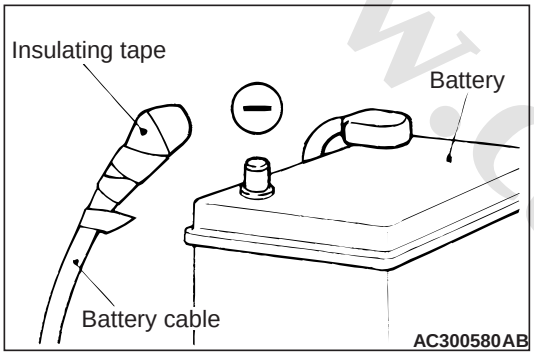

5. **Before maintenance, wait for 60 seconds or more after the disconnection of the battery (–) terminal. Wrap the disconnected (–) terminal with tape for insulation. The condenser inside SRS-ECU keeps a voltage necessary to expand the air bag for a certain period even after the IG power is turned OFF. Therefore, if any operation is performed before the period elapses, it may cause serious damage.**
6. **If the influence of heat is suspected during painting work, remove the following parts:**
   - **93°C or higher SRS-ECU, air bag module, clock spring, front impact sensor, side impact sensor**
   - **90 °C or higher Seat belt with pre-tensioner**
7. **After the maintenance of the SRS air bag and seat belt with pre-tensioner is completed, be sure to delete the diagnosis code and check whether the SRS warning lamp lights up (refer to).**

www.cargeek.ir

www.CarGeek.ir

SUPPORT LOCATIONS FOR LIFTING AND JACKING

M1001000700985

SUPPORT POSITIONS FOR A GARAGE JACK

⚠ CAUTION

Be sure to support the specified locations only. Otherwise, deformation of vehicle may occur.

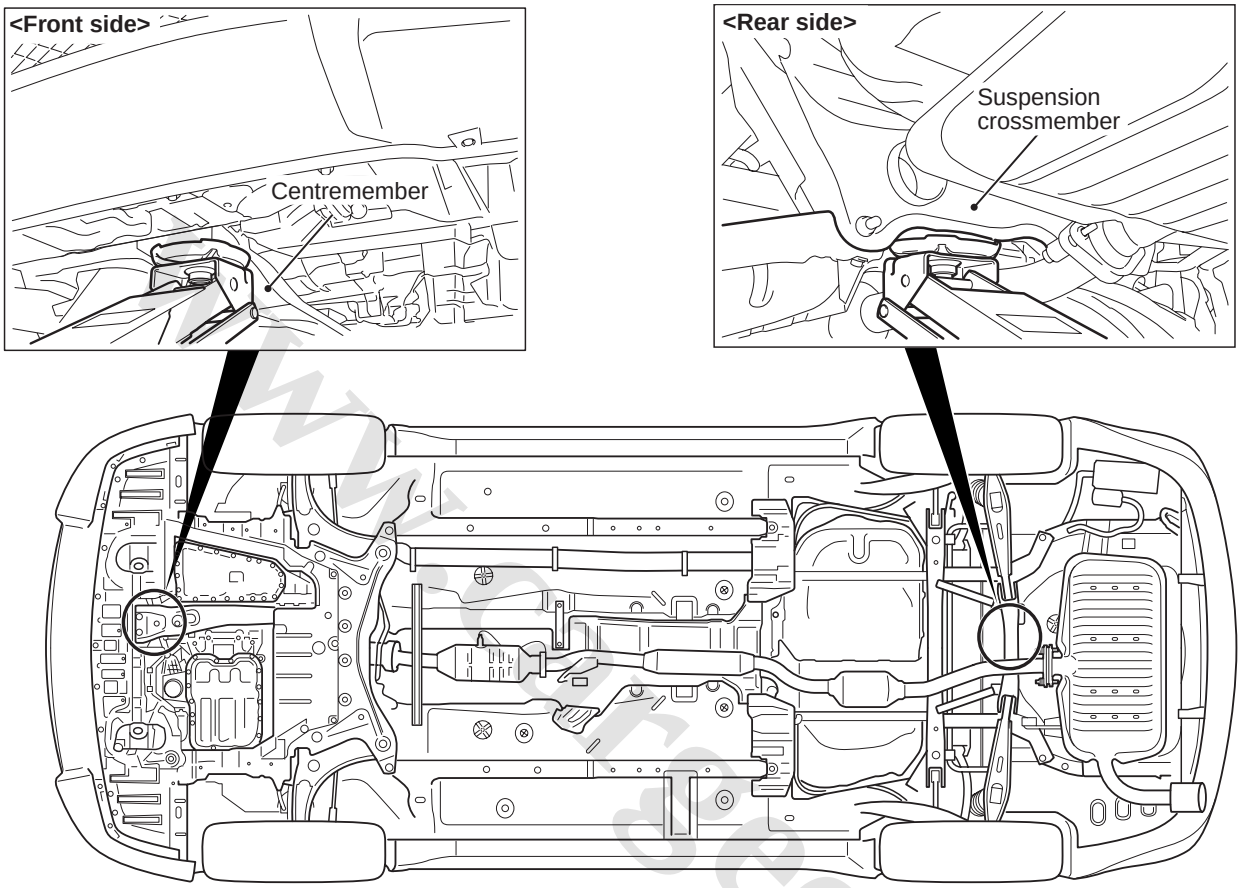

AC801797AB

www.cargeek.ir

www.CarGeek.ir

SUPPORT POSITIONS FOR RIGID RACKS AND SINGLE-POST LIFT OR DOUBLE-POST LIFT

⚠ CAUTION

- **If rubber attachments with grooves that are too thick are used at the front support positions, the front fender may become bent, so be sure to use rubber attachments with groove thicknesses of 18 mm or less.**
- **If attachments which are not high enough are used, they may damage areas such as the side step. Be sure to use attachments which are high enough, or remove the side step if not using attachments.**

Rigid racks

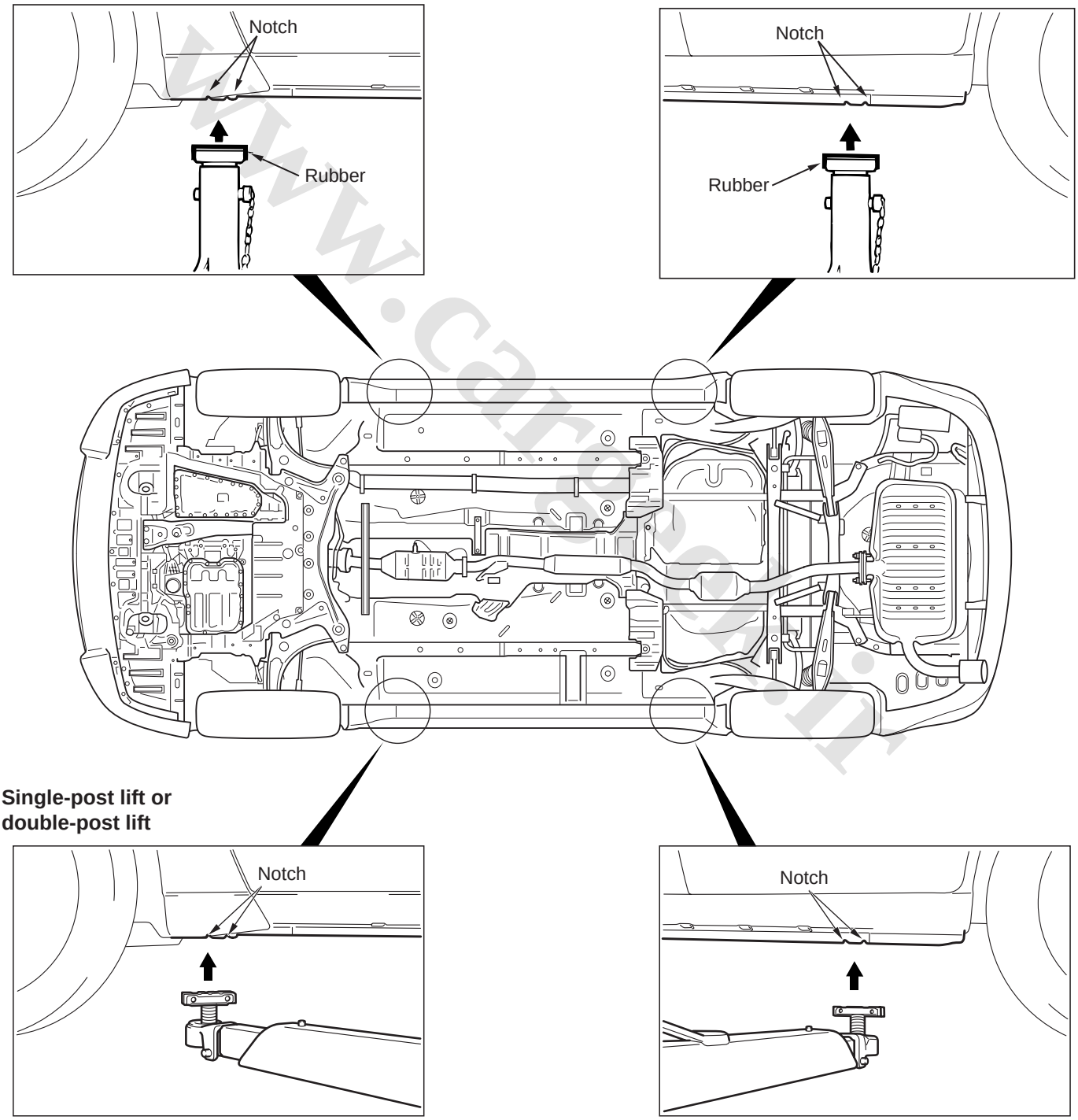

AC700197AB

www.cargeek.ir

www.CarGeek.ir

SUPPORT POSITIONS FOR PLATE TYPE LIFT

⚠ CAUTION

Insert a spacer between the notch and the lift to avoid damage to the side sill garnish. Be careful not to contact the spacer against the side sill.

Support the notch with a spacer (100-mm width, 100-mm height and 200-mm depth).

www.cargeek.ir

www.cargeek.ir

www.CarGeek.ir

GROUP 11A

ENGINE MECHANICAL <4A9>

CONTENTS

GENERAL INFORMATION 11A-2

SERVICE SPECIFICATIONS. 11A-2

SEALANTS AND ADHESIVES 11A-3

SPECIAL TOOLS. 11A-4

ON-VEHICLE SERVICE. 11A-7

DRIVE BELT TENSION CHECK AND ADJUSTMENT 11A-7

POWER STEERING OIL PUMP DRIVE BELT CHECK <Euro4> 11A-11

IGNITION TIMING CHECK. 11A-12

IDLE SPEED CHECK 11A-13

IDLE MIXTURE CHECK 11A-14

VALVE CLEARANCE CHECK AND ADJUSTMENT 11A-14

COMPRESSION PRESSURE CHECK. . . . 11A-16

MANIFOLD VACUUM CHECK 11A-17

CRANKSHAFT PULLEY 11A-18

CRANKSHAFT PULLEY REMOVAL AND INSTALLATION. 11A-18

CAMSHAFT 11A-24

CAMSHAFT REMOVAL AND INSTALLATION 11A-24

VALVE STEM SEAL. 11A-31

VALVE STEM SEAL REMOVAL AND INSTALLATION 11A-31

OIL PAN 11A-37

OIL PAN REMOVAL AND INSTALLATION. 11A-37

OIL PAN INSPECTION 11A-38

CRANKSHAFT OIL SEAL 11A-39

CRANKSHAFT OIL SEAL REMOVAL AND INSTALLATION. 11A-39

CYLINDER HEAD GASKET. 11A-42

CYLINDER HEAD GASKET REMOVAL AND INSTALLATION. 11A-42

TIMING CHAIN 11A-49

TIMING CHAIN REMOVAL AND INSTALLATION 11A-49

ENGINE ASSEMBLY 11A-56

ENGINE ASSEMBLY REMOVAL AND INSTALLATION 11A-56

www.cargeek.ir

www.CarGeek.ir

GENERAL INFORMATION

M1111000101962

Item		4A91	4A92
Total displacement mL		1,499	1,590
Bore × Stroke mm		75.0 × 84.8	75.0 × 90.0
Compression ratio		10.5	11.0
Compression chamber		Pentroof	
Camshaft arrangement		DOHC	
Number of valve	Intake	8	
	Exhaust	8	
Valve timing	Intake opening	BTDC 41° – ATDC 9°	
	Intake closing	ABDC 11° – ABDC 61°	
	Exhaust opening	BBDC 39°	
	Exhaust closing	ATDC 5°	
Fuel system		Electronically controlled multipoint fuel injection	
Rocker arm		Not equipped	
Auto-lash adjuster		Not equipped	

SERVICE SPECIFICATIONS

M1112000302768

Item		Standard value	Limit
Alternator and others belt tension (When checked)	Vibration frequency Hz	140 – 171	–
	Tension N	392 – 588	–
	Deflection mm (Reference)	9.5 – 12.2	–
Alternator and others belt tension (When adjusted)	Vibration frequency Hz	148 – 164	–
	Tension N	441 – 539	–
	Deflection mm (Reference)	10.2 – 11.5	–
Alternator and others belt tension (When replaced)	Vibration frequency Hz	198 – 221	–
	Tension N	784 – 980	–
	Deflection mm (Reference)	6.3 – 7.6	–
Power steering oil pump drive belt tension	Vibration frequency Hz (Reference)	108 – 221	–
	Tension N (Reference)	169 – 720	–
	Deflection mm (Reference)	18.2 or less	–
Basic ignition timing		5° BTDC ± 3°	–
Ignition timing		Approximately 10° BTDC	–
Idle speed r/min		750 ± 100	–
CO contents %		0.3 or less	–

www.cargeek.ir

www.CarGeek.ir

Item		Standard value	Limit
HC contents ppm		200 or less	–
Valve clearance (at cold) mm	Inlet valve	0.22 ± 0.04	–
	Exhaust valve	0.30 ± 0.04	–
Compression pressure (at engine speed of 300 r/min) kPa <4A91>		1,550	Minimum 1,100
Compression pressure (at engine speed of 250 r/min) kPa <4A92>		1,550	Minimum 1,100
Compression pressure difference of all cylinders kPa		–	Maximum 98
Intake manifold vacuum kPa		–	Minimum 60
Cylinder head bolt outside diameter difference mm		0 – 0.15	–

SEALANTS AND ADHESIVE

M1112000502687

Item	Specified Sealant and adhesive	Remark
Timing chain tensioner cover	ThreeBond 1217G (Mitsubishi Genuine Part No,1000A923), LOCTITE 5900, LOCTITE 5970 or equivalent	Semi-drying sealant
Cylinder head cover assembly		
Timing chain case assembly		
Cylinder block		
Cylinder head gasket		
Engine oil pan	ThreeBond 1217G (Mitsubishi Genuine Part No.1000A923), ThreeBond 1227D, LOCTITE 5900, LOCTITE 5970 or equivalent	
Crankshaft rear oil seal case assembly		
Flywheel bolt <M/T>	LOCTITE 2701 or equivalent	Anaerobic adhesive
Drive plate bolt <A/T>	LOCTITE 2701, ThreeBond 1324 or equivalent	
Timing chain case assembly (water pump)	ThreeBond 1227D, ThreeBond 1207F or equivalent	Semi-drying sealant

www.cargeek.ir

www.CarGeek.ir

SPECIAL TOOLS

M1112000603074

Tool	Number	Name	Use
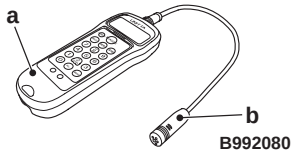	MB992080 a: MB992081 b: MB992082	Belt tension meter set a: Belt tension meter b: Microphone assembly	Drive belt tension check
a 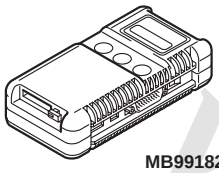 b 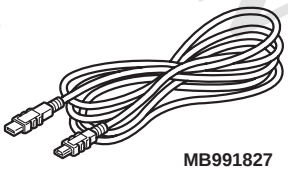 c 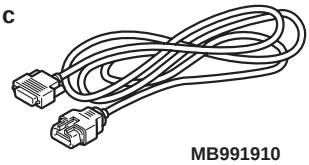 d 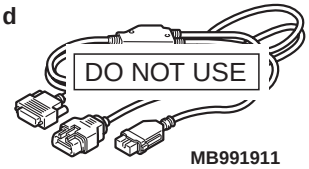 e 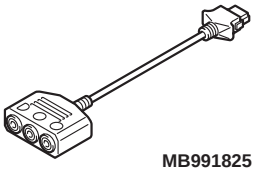 f 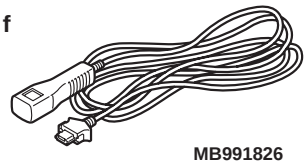 MB991955	MB991955 a: MB991824 b: MB991827 c: MB991910 d: MB991911 e: MB991825 f: MB991826	M.U.T.-III sub assembly a: Vehicle communication interface (V. C. I.) b: M.U.T.-III USB cable c: M.U.T.-III main harness A (Vehicles with CAN communication system) d: M.U.T.-III main harness B (Vehicles without CAN communication system) e: M.U.T.-III adapter harness f: M.U.T.-III trigger harness	⚠ CAUTION **For vehicles with CAN communication, use M.U.T.-III main harness A to send simulated vehicle speed. If you connect M.U.T.-III main harness B instead, the CAN communication does not function correctly.** • Checking the ignition timing • Checking the idle speed
	MB992276	Drive belt remover	Power steering oil pump drive belt removal

www.cargeek.ir
www.cargeek.ir

www.CarGeek.ir

Tool	Number	Name	Use
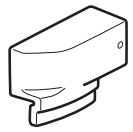 MB992858	MB992858	Drive belt installer	Power steering oil pump drive belt installation
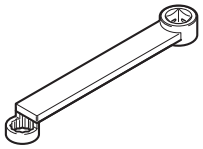 B991992	MB991992	Torque wrench adaptor	Removal and installation of V.V.T. sprocket assembly mounting bolt
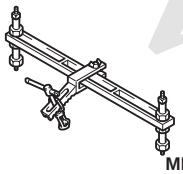 MD998772	MD998772	Valve spring compressor	Valve spring compression
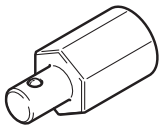 B992090	MB992090	Retainer holder attachment	
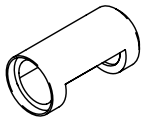	MB992089	Retainer holder C	
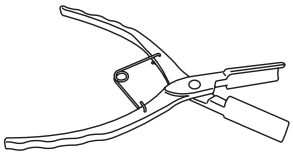	MB992085	Valve stem seal pliers	Valve stem seal removal
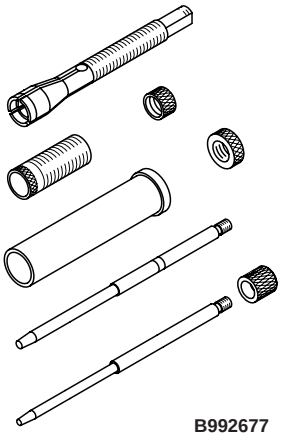 B992677	MB992677	Valve stem seal installer adjustable	Valve stem seal press-fitting

www.cargeek.ir

www.CarGeek.ir

Tool	Number	Name	Use
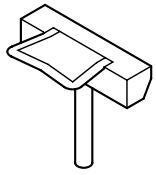 D998727	MD998727	Oil pan FIPG cutter	Engine oil pan removal
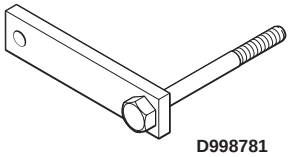 D998781	MD998781	Flywheel stopper	Supporting the flywheel assembly <M/T> or drive plate assembly <A/T>
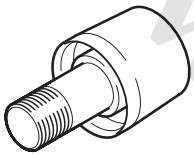 B991993	MB991993	Crankshaft front oil seal guide	Crankshaft front oil seal installation
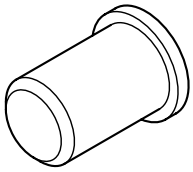	MB990699	Differential oil seal installer	
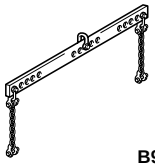 B991454	MB991454	Engine hanger balancer	Supporting the engine and transmission assembly *NOTE: Special tool MB991454 is a part of engine hanger attachment set MB991453.*
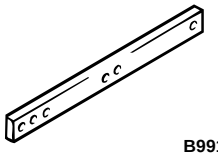 B991527	MB991527	Hanger	

www.cargeek.ir
www.cargeek.ir

www.CarGeek.ir

Tool	Number	Name	Use
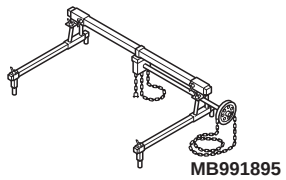	MB991895	Engine hanger	When the engine hanger is used: Supporting the engine assembly during removal and installation of the timing chain case assembly or transmission assembly
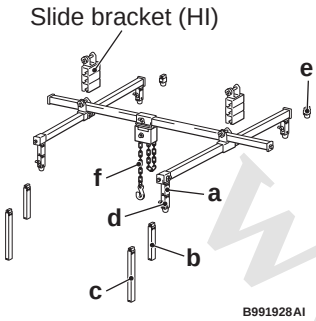	MB991928 a: MB991929 b: MB991930 c: MB991931 d: MB991932 e: MB991933 f: MB991934	Engine hanger a: Joint (50) × 2 b: Joint (90) × 2 c: Joint (140) × 2 d: Foot (standard) × 4 e: Foot (short) × 2 f: Chain and hook assembly	
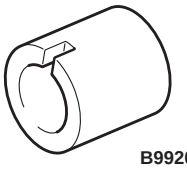	MB992000	Crankshaft adapter	Cranking of the engine after the crankshaft pulley removal

ON-VEHICLE SERVICE

DRIVE BELT TENSION CHECK AND ADJUSTMENT

M1111003103622

ALTERNATOR AND OTHERS BELT TENSION CHECK

⚠ CAUTION

- **When checking the drive belt tension, make sure that the engine is cold.**
- **Check the drive belt tension after turning the crankshaft clockwise one turn or more.**

Check the alternator and others belt tension in the following procedure.

NOTE: For the vehicles without A/C compressor, the check procedure and the standard value are also same.

Standard value:

Item	When checked	When adjusted	When replaced
Vibration frequency Hz	140 – 171	148 – 164	198 – 221
Tension N	392 – 588	441 – 539	784 – 980
Deflection mm (Reference)	9.5 – 12.2	10.2 – 11.5	6.3 – 7.6

<When the vibration frequency is measured {Special tool (MB992080) is used}: Recommendation>

NOTE: The vibration frequency measuring method is recommended for check and adjustment of the alternator and others belt tension.

www.cargeek.ir

www.CarGeek.ir

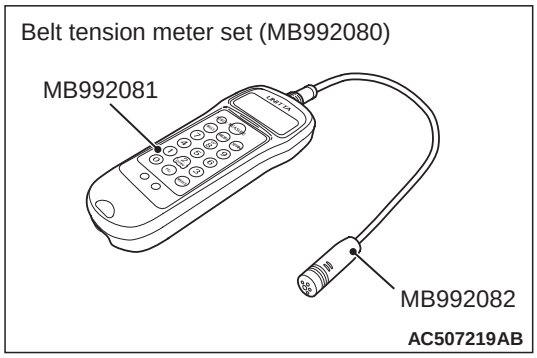

1. Connect the Special tool microphone assembly (MB992082) to the Special tool belt tension meter (MB992081) of the Special tool belt tension meter set (MB992080).
2. Press the "POWER" button to turn on the power supply.
3. Press number key 1. Check to ensure that "No. 01" appears on the upper left of the display and that the following numeric values are displayed for individual items (M, W, and S):

   M 000.9 g/m

   W 010.0 mm/R

   S 0100 mm

   If numeric values have not been entered (new tool), set them according to the belt specifications as shown below. Once you set them, you do not have to set them again. The settings remain undeleted even after battery replacement.

   NOTE: This operation is to temporarily set the preset data such as the belt specifications, because if the measurement is taken without input of the belt specifications, conversion to tension value (N) cannot be made, resulting in judgement of error.

   <Setting procedure>

   (1) Press down the "MASS" button till the belt mass select display appears.

   (2) Press the "UP" or "DOWN" button to select "01 1.5GT 0.9" and press the "MEASURE" button to decide it.
   Check to ensure that "M 000.9 g/m" is displayed.

   (3) Press the "WIDTH" button to change to the belt width input display.

   (4) Press number keys 0, 1, 0, and 0 sequentially, and press the "SELECT" button to apply them. Check to ensure that "W 010.0 mm/R" appears on the display.

   (5) Press the "SPAN" button to change to the span length input display.

   (6) Press number keys 0, 1, 0, and 0 sequentially, and press the "SELECT" button to apply them. Check to ensure that "S 0100 mm" appears on the display.

4. Press "Hz" button twice to change the display to the frequency display (Hz).

⚠ CAUTION

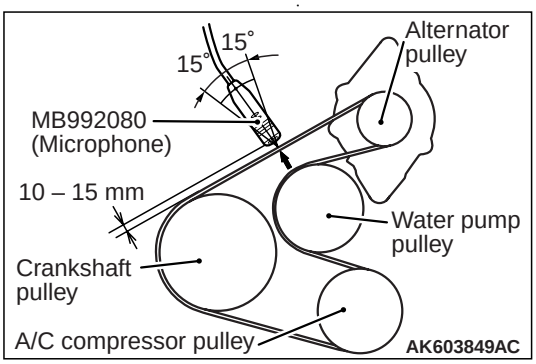

The temperature of the surface of the belt should be as close as possible to normal temperature.

- **Do not let any contaminants such as water or oil get onto the microphone.**
- **If strong gusts of wind blow against the microphone or if there is loud sources of noise nearby, the values measured by the microphone may not correspond to actual values.**
- **If the microphone is touching the belt while the measurement is being made, the values measured by the microphone may not correspond to actual values.**
- **Do not take the measurement while the vehicle's engine is running.**

5. Hold the microphone to the middle of the alternator and others belt between the pulleys (at the place indicated by the arrow), about 10 – 15 mm away from the rear surface of the belt and so that it is perpendicular to the belt (within an angle of ± 15 °).
6. Press the "MEASURE" button.
7. Gently tap the middle of the belt between the pulleys (the place indicated by the arrow) with your finger as shown in the illustration, and check that the vibration frequency of the belt is within the standard value.

   NOTE: To take the measurement repeatedly, fillip the belt again.

8. After the completion of the measurement, press and hold the "POWER" button to turn off the power supply.

www.cargeek.ir

www.CarGeek.ir

<When using the tension gauge>

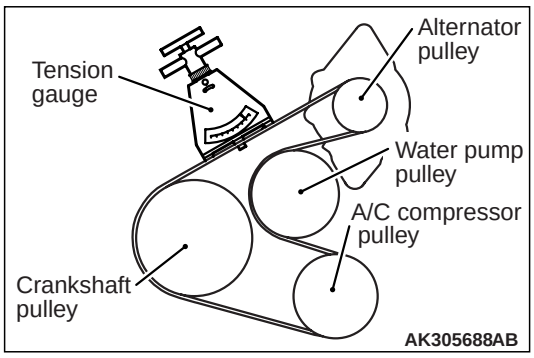

Use a belt tension gauge to check that the belt tension is within the standard value.

NOTE: Before inspection, remove the oil level gauge guide.

<Belt deflection check>

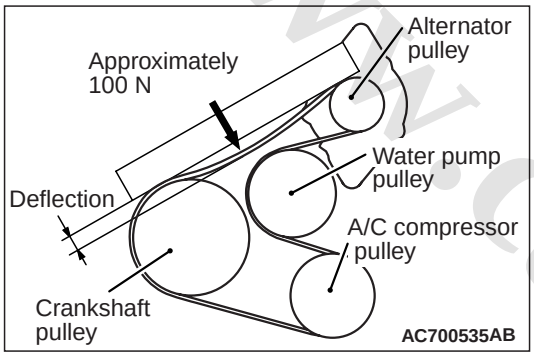

Apply approximately 100 N of force to the middle of the alternator and others belt between the pulleys (at the place indicated by the arrow) and check that the amount of deflection is within the standard value.

ALTERNATOR AND OTHERS BELT TENSION ADJUSTMENT

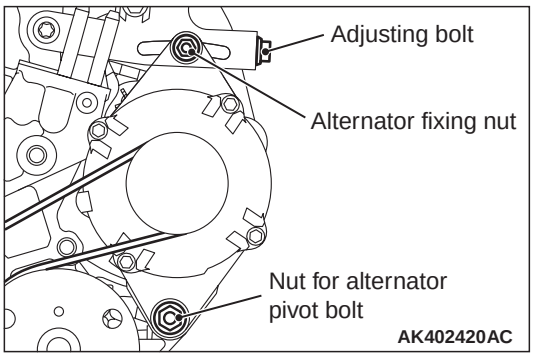

If not within the standard value, adjust the belt tension by the following procedure.

1. Loosen the nut of the alternator pivot bolt.
2. Loosen the alternator fixing nut.
3. Use the adjusting bolt to adjust the belt tension and belt deflection to the standard values.
4. Temporarily tighten the alternator fixing nut.
   Tightening torque: 11 ± 3 N·m
5. Tighten the nut of the alternator pivot bolt.
   Tightening torque: 47 ± 5 N·m
6. Tighten the alternator fixing nut.
   Tightening torque: 23 ± 2 N·m
7. Tighten the adjusting bolt.
   Tightening torque: 5.0 ± 1.0 N·m

⚠ CAUTION

When checking the belt tension, turn the crankshaft clockwise one turn or more.

8. Check the belt tension, and readjust if necessary.
9. When the belt tension is adjusted by measuring the deflection, adjust it with a tool for vibration frequency measurement or tension measurement afterward.

POWER STEERING OIL PUMP DRIVE BELT TENSION CHECK <Euro4>

NOTE:

- *An elastic stretch-type belt is used for the power steering oil pump drive, therefore, the tension adjustment is not necessary.*
- *Perform the power steering oil pump drive belt tension check according to the following procedures.*

<When the vibration frequency is measured: Recommendation>

⚠ CAUTION

- **When measuring the vibration frequency, make sure that the engine is cold.**
- **Measure the vibration frequency after turning the crankshaft clockwise one turn or more.**

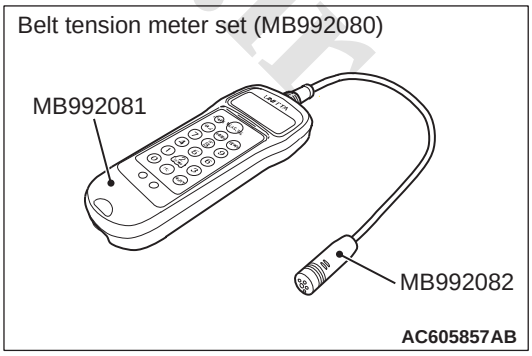

1. Connect the special tool microphone assembly (MB992082) to the special tool belt tension meter (MB992081) of the special tool belt tension meter set (MB992080).
2. Press the "POWER" button to turn on the power supply.

www.cargeek.ir

www.CarGeek.ir

3. Press number key 1. Check to ensure that "No. 01" appears on the upper left of the display and that the following numeric values are displayed for individual items (M, W, and S):

   M 000.9 g/m

   W 010.0 mm/R

   S 0100 mm

   If numeric values have not been entered (new tool), set them according to the belt specifications as shown below. Once you set them, you do not have to set them again. The settings remain undeleted even after battery replacement.

   NOTE: This operation is to temporarily set the preset data such as the belt specifications, because if the measurement is taken without input of the belt specifications, conversion to tension value (N) cannot be made, resulting in judgement of error.

   <Setting procedure>

   (1) Press down the "MASS" button till the belt mass select display appears.
   (2) Press the "UP" or "DOWN" button to select "01 1.5GT 0.9" and press the "MEASURE" button to decide it. Check to ensure that "M 000.9 g/m" is displayed.
   (3) Press the "WIDTH" button to change to the belt width input display.
   (4) Press number keys 0, 1, 0, and 0 sequentially, and press the "SELECT" button to apply them. Check to ensure that "W 010.0 mm/R" appears on the display.
   (5) Press the "SPAN" button to change to the span length input display.
   (6) Press number keys 0, 1, 0, and 0 sequentially, and press the "SELECT" button to apply them. Check to ensure that "S 0100 mm" appears on the display.

4. Press "Hz" button twice to change the display to the frequency display (Hz).

⚠ CAUTION

- **Do not allow any contaminants such as water or oil to get onto the microphone.**
- **If strong gusts of wind blow against the microphone or if there are any loud sources of noise nearby, the values measured by the microphone may not correspond to actual values.**
- **If the microphone is touching the belt while the measurement is being made, the values measured by the microphone may not correspond to actual values.**
- **Do not take the measurement while the vehicle's engine is running.**

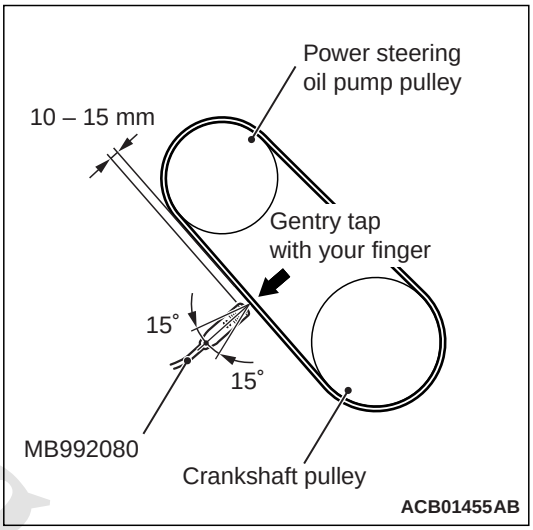

5. Hold the special tool MB992080 to the middle of the drive belt between the pulleys (at the place indicated by arrow), approximately 10 – 15 mm away from the rear surface of the drive belt so that it is perpendicular to the drive belt (within an angle of ± 15°).
6. Press the "MEASURE" button.
7. Gently tap the middle of the drive belt between the pulleys (the place indicated by the arrow) with your finger as shown in the illustration, and measure that the vibration frequency of the drive belt is within the standard value.

   Standard value (Reference): 108 – 221 Hz

   NOTE: To take the measurement repeatedly, fillip the drive belt again.
8. After the completion of the measurement, press and hold the "POWER" button to turn off the power supply.
9. If not within the standard value, replace the power steering oil pump drive belt (Refer to).

www.cargeek.ir

www.CarGeek.ir

<When the tension is measured>

⚠ CAUTION

- **When measuring the tension, make sure that the engine is cold.**
- **Measure the tension after turning the crankshaft clockwise one turn or more.**

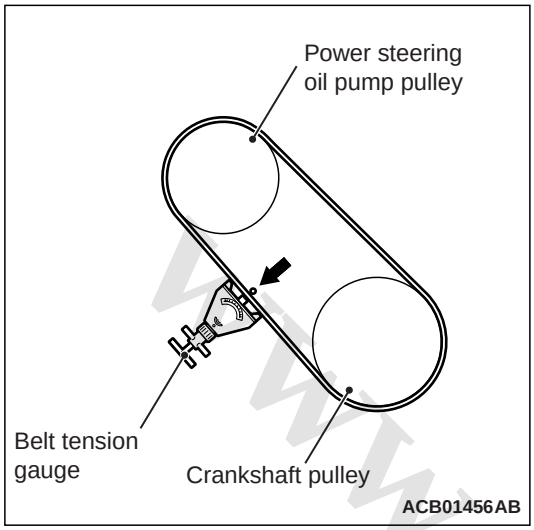

1. Use a belt tension gauge in the middle of the power steering oil pump drive belt between the pulleys shown in the figure (at the place indicated by the arrow) to check that the drive belt tension is within the standard value.

   Standard value (Reference): 169 – 720 N

2. If not within the standard value, replace the power steering oil pump drive belt (Refer to).

<When the deflection is measured>

⚠ CAUTION

- **When measuring the deflection, make sure that the engine is cold.**
- **Measure the deflection after turning the crankshaft clockwise one turn or more.**

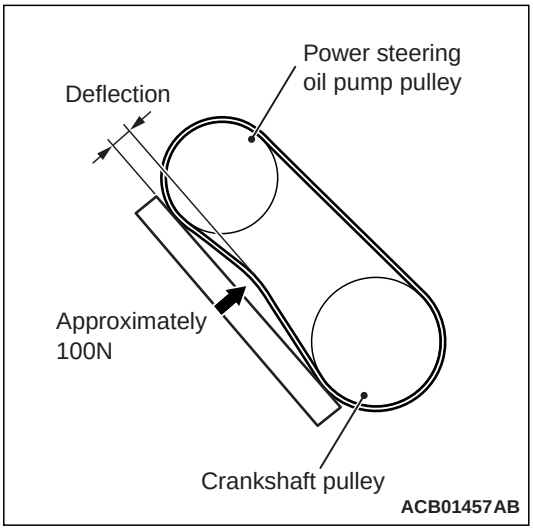

1. Apply approximately 100 N of force to the middle of the power steering oil pump drive belt between the pulleys (at the place indicated by the arrow) and check that the amount of deflection is within the standard value.

   Standard value (Reference): 18.2 mm or less

2. If not within the standard value, replace the power steering oil pump drive belt (Refer to).

POWER STEERING OIL PUMP DRIVE BELT CHECK <Euro4>

M1111005600011

1. Check the every part of power steering oil pump drive belt for damage including cracks or delamination in detail by a visual inspection or touching.
2. If there is the damage, replace the power steering oil drive belt with a new one (Refer to).

www.cargeek.ir

www.CarGeek.ir

IGNITION TIMING CHECK

M1111001702829

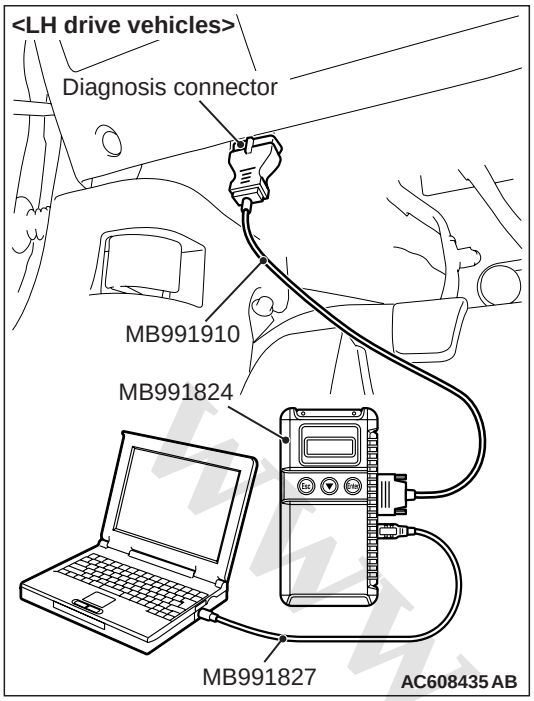

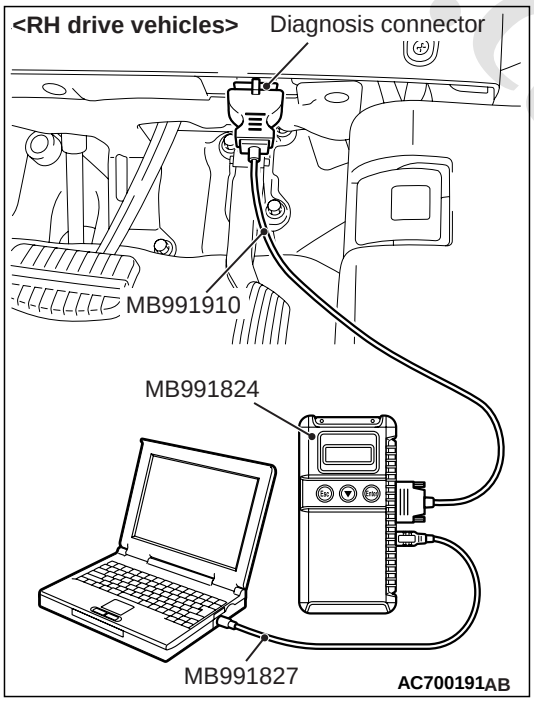

1. Before inspection, set the vehicle to the pre-inspection condition.
2. Turn the ignition switch to the "LOCK" (OFF) position and then connect the M.U.T.-III to the diagnosis connector.

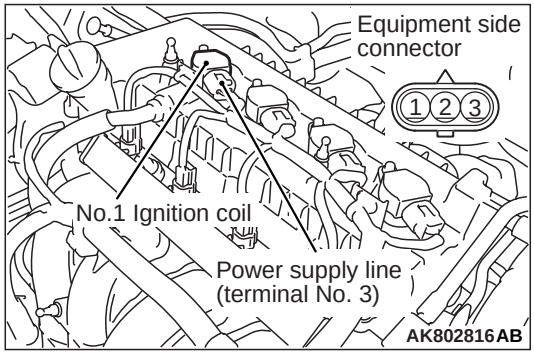

3. Set the timing light to the power supply line (terminal No. 3) of the ignition coil No. 1.

   NOTE: The power supply line is looped and also longer than the other ones.
4. Start the engine and let it run at idle.
5. Select the item No. 2 on M.U.T.-III and measure engine idle speed and check that it is approximately 750 r/min.
6. Select No. 11 (actuator test function) of the M.U.T.-III, and set the ignition timing to the basic ignition timing.
7. Check that basic ignition timing is within the standard value.

   Standard value: 5° BTDC ± 3°
8. If the basic ignition timing is outside the standard value, inspect the MPI system (Refer to GROUP 13A – Troubleshooting – Inspection Chart for Trouble symptoms).

⚠ CAUTION

If the test is not cancelled, a forced driving will continue for 27 minutes. Driving under this condition may damage the engine.

9. Cancel the actuator test function item No. 11, Basic ignition timing set mode, on M.U.T.-III
10. Check that ignition timing is at the standard value.

    Standard value: approximately 10° BTDC

    NOTE:
    - *The ignition timing may fluctuate within ± 7°. This is normal.*
    - *In higher altitude, the ignition timing is more advanced than the standard value by approximately 5°.*
    - *Wait till approximately 1 minute passes after the engine started, and check the ignition timing when the engine stabilized.*
11. Remove the timing light.
12. Turn the ignition switch to the "LOCK" (OFF) position and then disconnect the M.U.T.-III.

www.cargeek.ir

www.CarGeek.ir

IDLE SPEED CHECK

M1111003502865

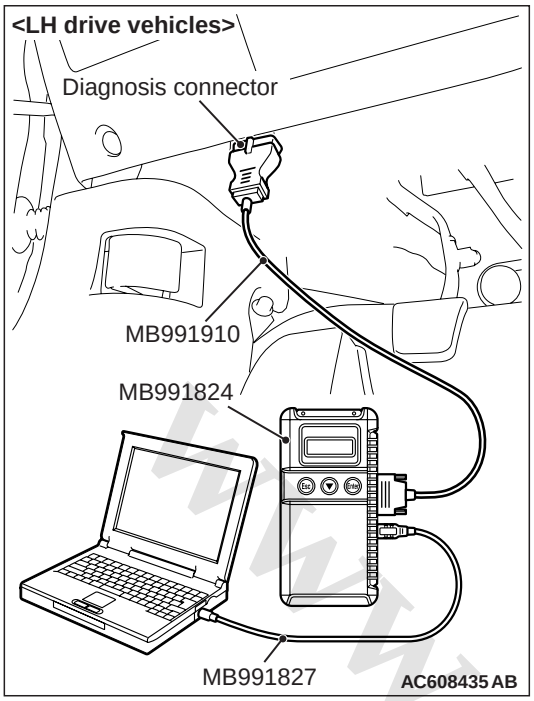

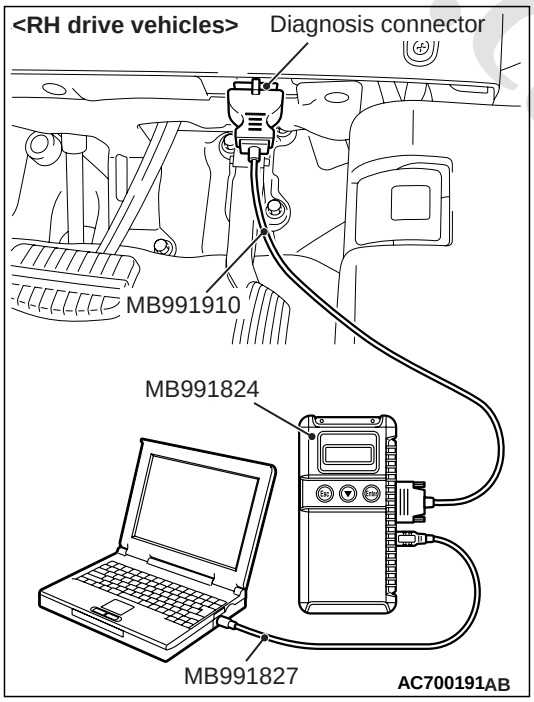

1. Before inspection, set the vehicle to the pre-inspection condition.
2. Turn the ignition switch to "LOCK" (OFF) position.
3. Connect the M.U.T.-III to the diagnosis connector.

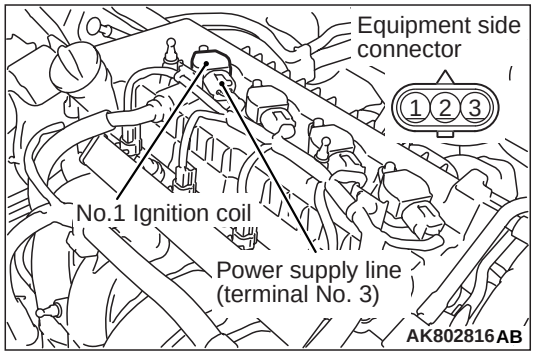

4. Set the timing light to the power supply line (terminal No. 3) of the ignition coil No. 1.

   NOTE: The power supply line is looped and also longer than the other ones.
5. Start the engine and let it run at idle.
6. Check that ignition timing is at the standard value.

   Standard value: approximately 10° BTDC

NOTE:
- *The ignition timing may fluctuate within ±7°. This is normal.*
- *In higher altitude, the ignition timing is more advanced than the standard value by approximately 5°.*
- *Wait till approximately 1 minute passes after the engine started, and check the ignition timing when the engine stabilized.*

7. Check the idle speed.

   Standard value: 750 ± 100 r/min

   NOTE:
   - *The idle speed is controlled automatically by the idle speed control system.*
   - *When using the M.U.T.-III, select item No. 2 and take a reading of the idle speed.*
8. If the idle speed is outside the standard value, inspect the MPI system (Refer to GROUP 13A – Troubleshooting – Inspection Chart for Trouble Symptoms).
9. Remove the timing light.
10. Turn the ignition switch to "LOCK" (OFF) position and then disconnect the M.U.T.-III.

www.cargeek.ir

www.CarGeek.ir

IDLE MIXTURE CHECK

M1111002102068

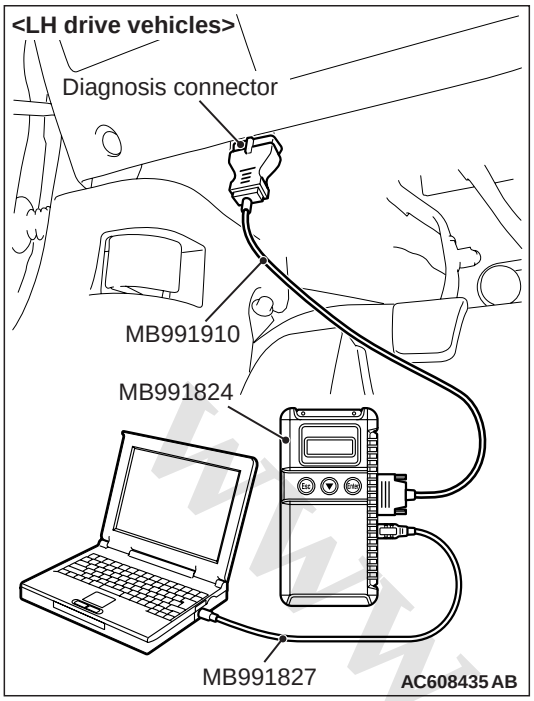

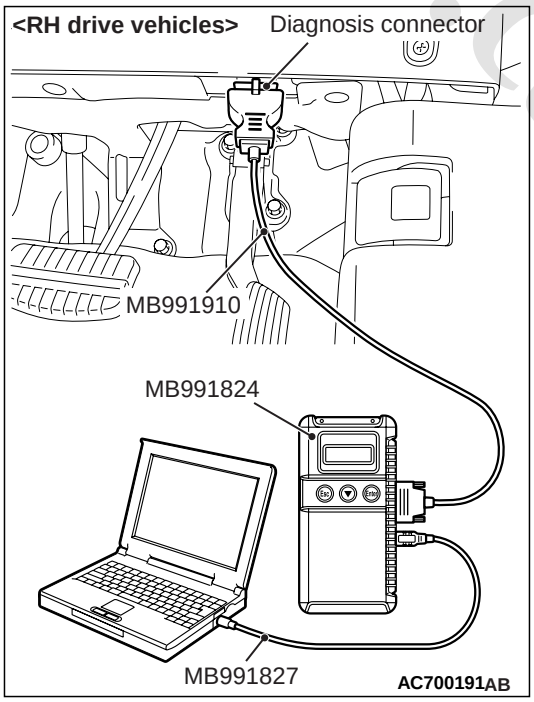

1. Before inspection, set the vehicle to the pre-inspection condition.
2. Turn the ignition switch to "LOCK" (OFF) position.
3. Connect the M.U.T.-III to the diagnosis connector.

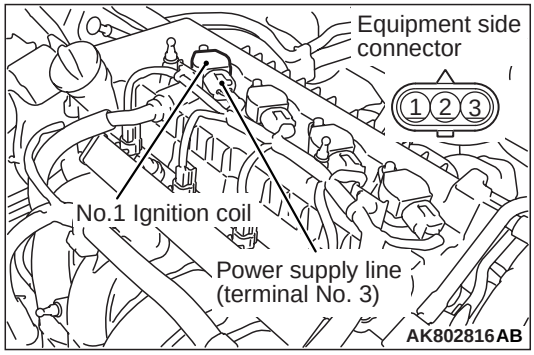

4. Set the timing light to the power supply line (terminal No. 3) of the ignition coil No. 1.

   NOTE: The power supply line is looped and also longer than the other ones.
5. Start the engine and let it run at idle.
6. Check that ignition timing is at the standard value.

   Standard value: approximately 10° BTDC

NOTE:
- *The ignition timing may fluctuate within ±7°. This is normal.*
- *In higher altitude, the ignition timing is more advanced than the standard value by approximately 5°.*
- *Wait till approximately 1 minute passes after the engine started, and check the ignition timing when the engine stabilized.*

7. Run the engine at 2,000 – 3,000 r/min for 2 minutes.
8. Set the CO, HC tester.
9. Check the CO contents and the HC contents at idle.

   Standard value
   CO contents: 0.3 % or less
   HC contents: 200 ppm or less
10. If there is a deviation from the standard value, inspect the MPI system (Refer to GROUP 13A – Troubleshooting – Inspection Chart for Trouble Symptoms)
11. Remove the timing light and CO, HC tester.
12. Turn the ignition switch to "LOCK" (OFF) position and then disconnect the M.U.T.-III.

VALVE CLEARANCE CHECK AND ADJUSTMENT

M1111001501930

NOTE: Perform the valve clearance check and adjustment at the engine cold state.

1. Remove all ignition coils.
2. Remove the cylinder head cover.

www.cargeek.ir

www.CarGeek.ir

⚠ CAUTION

Turn the crankshaft always clockwise.

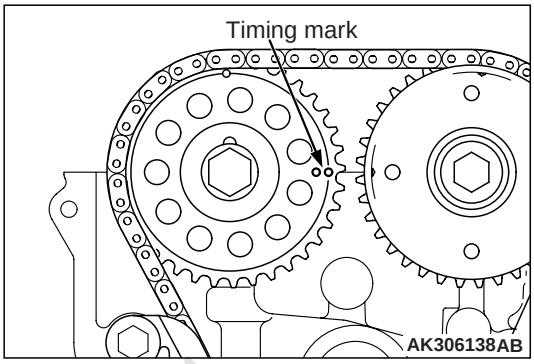

3. Turn the crankshaft clockwise, and align the timing mark on the exhaust camshaft sprocket against the upper face of the cylinder head as shown in Figure. Therefore, No.1 cylinder goes to the compression top dead centre.

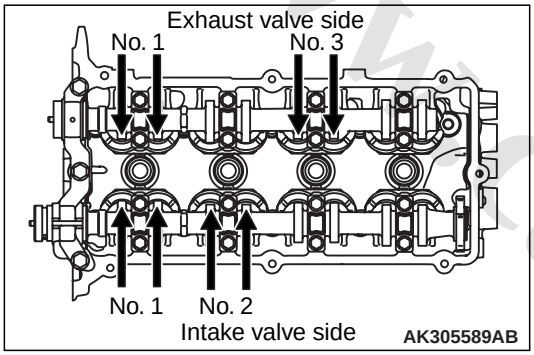

4. Using a thickness gauge, measure the valve clearance with the arrow shown in Figure. If deviated from the standard value, make note for the valve clearance.

   Standard value:
   Intake valve 0.22 ± 0.04 mm
   Exhaust valve 0.30 ± 0.04 mm

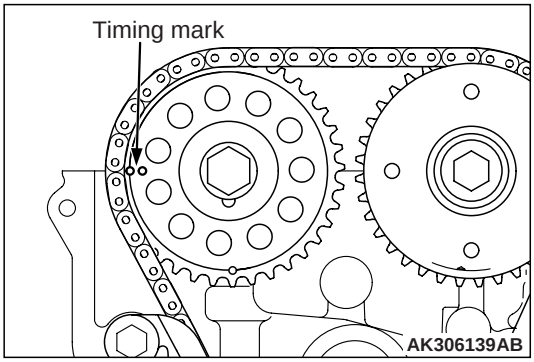

5. Turn the crankshaft clockwise 360 degrees, and put the timing mark on the exhaust camshaft sprocket in position shown in Figure. Therefore, No.4 cylinder goes to the compression top dead centre.

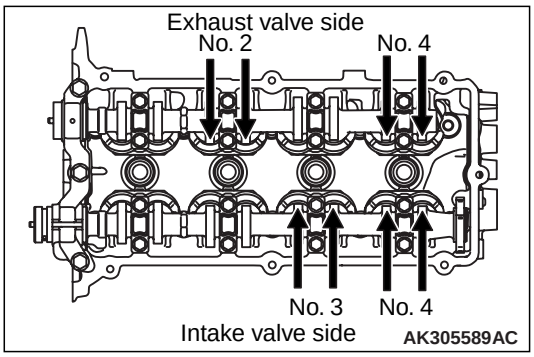

6. Check the valve clearance with the arrow shown in Figure. In the same procedure as 4.
7. If the valve clearance is deviated from the standard value, remove the camshaft and the valve tappet. For the camshaft removal, refer to Camshaft Removal and Installation .

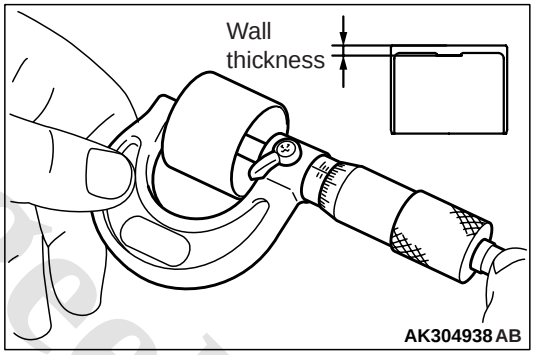

8. Using a micrometer, measure the thickness of the removed valve tappet.
9. Calculate the thickness of the newly installed valve tappet through the following equation.

   A: thickness of newly installed valve tappet

   B: thickness of removed valve tappet

   C: measured valve clearance

   Equation
   Intake valve: A = B + (C – 0.22 mm)
   Exhaust valve: A = B + (C – 0.30 mm)

www.cargeek.ir

www.CarGeek.ir

NOTE:

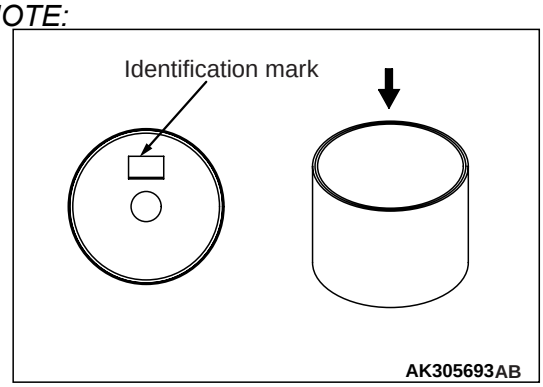

The valve tappet ranges 5.10 – 5.70 mm and has 31 types per 0.02 mm. The thickness below a decimal point is stamped on the reverse side of the valve tappet.
Example: In case of 5.40 mm, "40" is stamped.

10. Install the valve tappet selected through the procedure 10, and put the camshaft in position. For the camshaft installation, refer to Camshaft Removal and Installation .
11. Remove any liquid gasket remaining on the cylinder head cover, the timing chain case and the cylinder head.

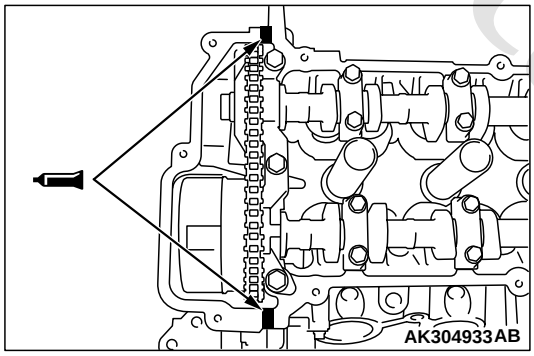

⚠ CAUTION

The cylinder head cover should be installed within 3 minutes of applying liquid gasket.

12. Apply a 4 mm bead of liquid gasket as illustrated.

Specified sealant:
Three bond 1217G or exact equivalent

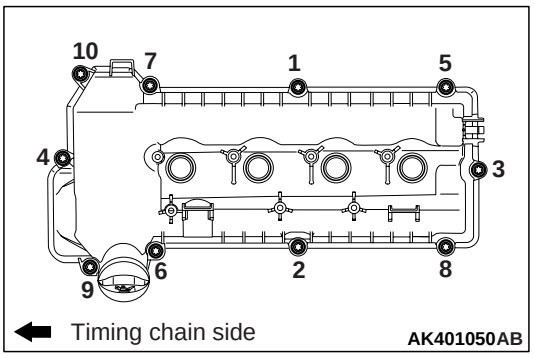

13. Install the cylinder head cover and tighten the tightening bolts using the following procedures.
    (1) Temporarily tighten to the following torque in order shown in the illustration.
    Tightening torque: 3.0 ± 1.0 N·m
    (2) Tighten to the specified torque in order shown in the illustration.
    Specified torque: 5.5 ± 0.5 N·m
14. Install the ignition coils.

COMPRESSION PRESSURE CHECK

M1111002603754

1. Before inspection, set the vehicle to the pre-inspection condition.
2. Remove all of the ignition coils and spark plugs.

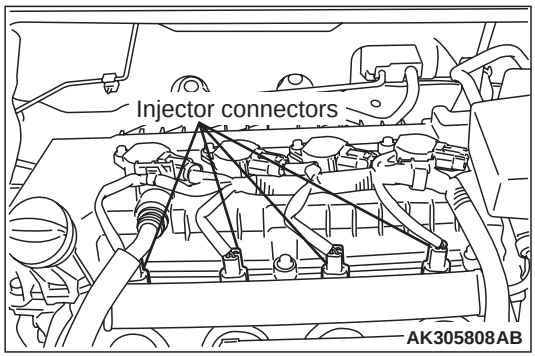

3. Disconnect the all of the injector connectors.

⚠ CAUTION

- **Keep away from the spark plug hole when cranking.**
- **If compression is measured with water, oil, fuel, etc., that has come from cracks inside the cylinder, these materials will become heated and will gush out from the spark plug hole, which is dangerous.**

4. Cover the spark plug hole with a shop towel etc., and after the engine has been cranked, check that no foreign material is adhering to the shop towel.

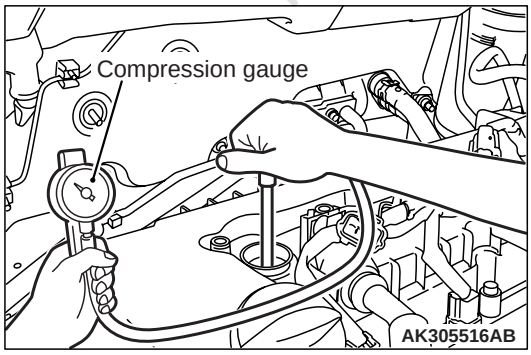

5. Set compression gauge to one of the spark plug holes.

www.cargeek.ir

www.CarGeek.ir

6. Cranking the engine with the accelerator pedal fully depressed, measure the compression pressure.

   <4A91>
   Standard value (at engine speed of 300 r/min): 1,550 kPa
   Limit (at engine speed of 300 r/min): Minimum 1,050 kPa

   <4A92>
   Standard value (at engine speed of 250 r/min): 1,550 kPa
   Limit (at engine speed of 250 r/min): Minimum 1,050 kPa

7. Measure the compression pressure for all the cylinders, and check that the pressure differences of the cylinders are below the limit.

   Limit: Maximum 98 kPa

8. If there is a cylinder with compression or a compression difference that is outside the limit, pour a small amount of engine oil through the spark plug hole, and repeat the operations in steps from 5 to 7.
   (1) If the compression increases after oil is added, the cause of the malfunction is a worn or damaged piston ring and/or cylinder inner surface.
   (2) If the compression dose not rise after oil is added, the cause is a burnt or defective valve seat, or pressure is leaking from the gasket.
9. Connect the crank angle sensor connector.
10. Install the spark plugs and spark plug cables.
11. Use the M.U.T.-III to erase the diagnosis codes.

    NOTE: This will erase the diagnosis code resulting from the injector connectors being disconnected.

MANIFOLD VACUUM CHECK

M1111002702457

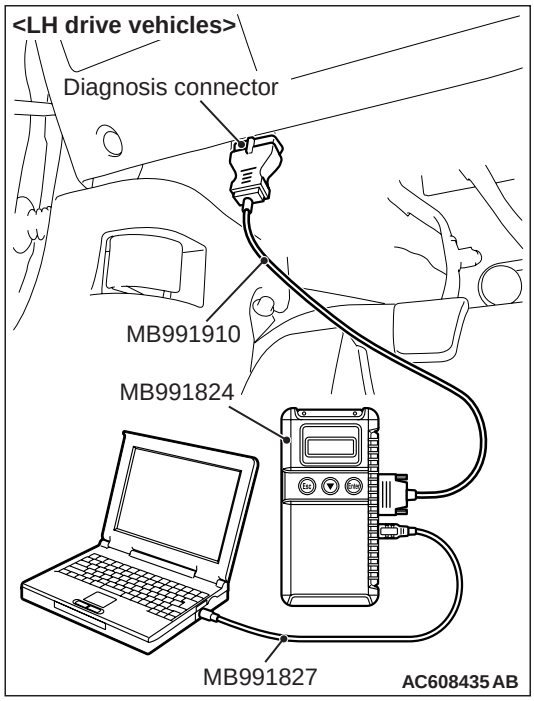

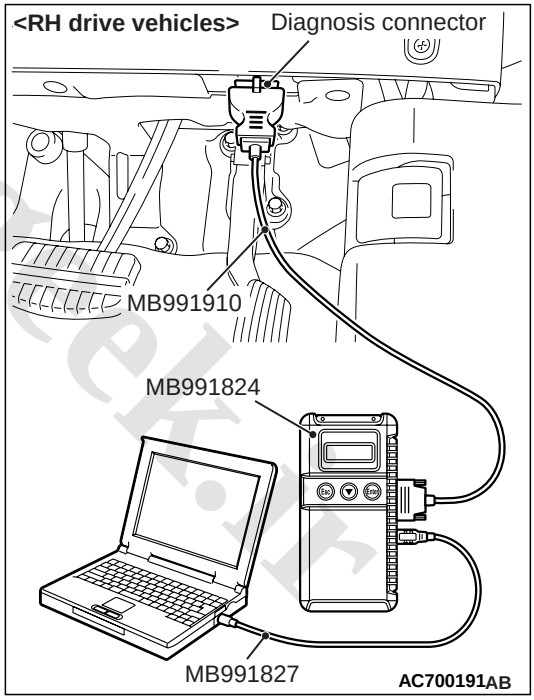

1. Before inspection, set the vehicle to the pre-inspection condition.
2. Turn the ignition switch to "LOCK" (OFF) position.
3. Connect the M.U.T.-III to the diagnosis connector.

www.cargeek.ir

www.CarGeek.ir

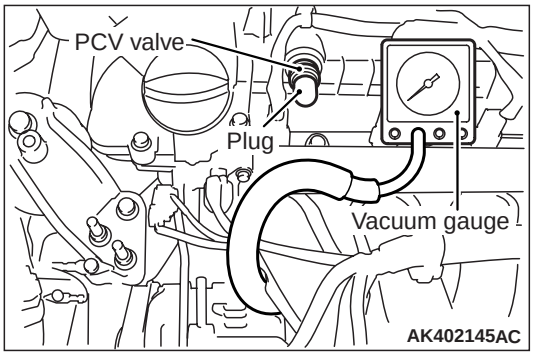

4. Disconnect the ventilation hose from the positive crankcase ventilation (PVC) valve, and then connect a vacuum gauge to the ventilation hose. Plug the PCV valve.
5. Start the engine and check that idle speed is approximately 750 r/min.
6. Check the intake manifold vacuum.
   Limit: Minimum 60 kPa
7. Turn off the ignition switch.
8. Remove the vacuum gauge and then connect the ventilation hose to the PCV valve.
9. Remove the M.U.T.-III.

CRANKSHAFT PULLEY

REMOVAL AND INSTALLATION

M1112001604661

Pre-removal Operation	Post-installation Operation
• Engine Room Under Cover Front B and Engine Room Side Cover (RH) Removal (Refer to GROUP 51 – Under Cover).	• Drive belt Tension Check and Adjustment (Refer to). • Engine Room Under Cover Front B and Engine Room Side Cover (RH) Installation (Refer to GROUP 51 – Under Cover).

<Euro5>

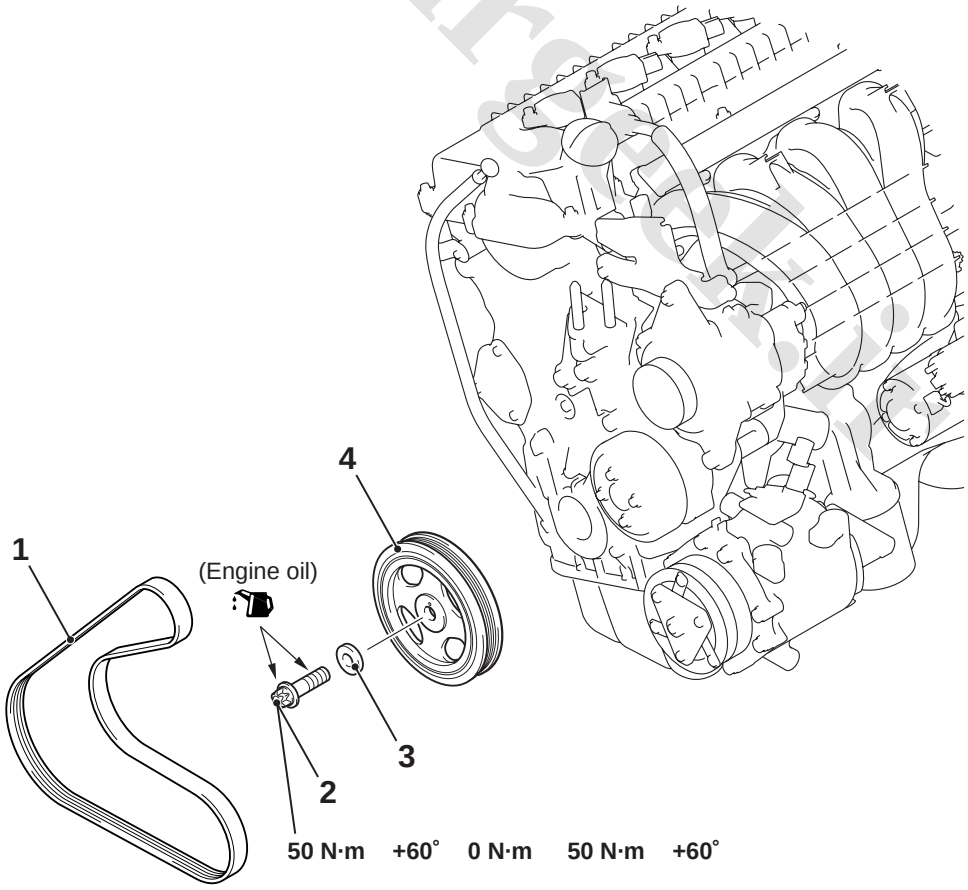

www.cargeek.ir

www.CarGeek.ir

Removal steps

<<**B**>>	>>**B**<<	1.	Drive belt
<<**C**>>	>>**A**<<	2.	Crankshaft pulley centre bolt
	>>**A**<<	3.	Crankshaft pulley washer
	>>**A**<<	4.	Crankshaft damper pulley

<Euro4>

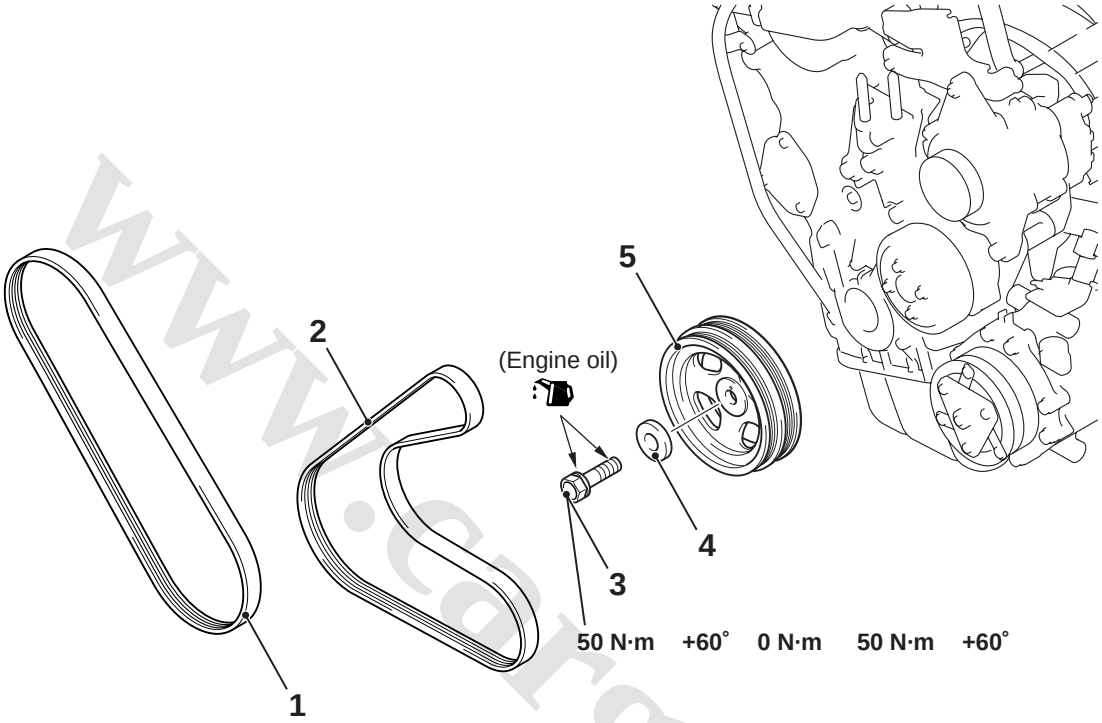

ACB01385AB

Removal steps

<<**A**>>	>>**C**<<	1.	Power steering oil pump drive belt
<<**B**>>	>>**B**<<	2.	Drive belt
<<**C**>>	>>**A**<<	3.	Crankshaft pulley centre bolt

Removal steps (Continued)

	>>**A**<<	4.	Crankshaft pulley washer
	>>**A**<<	5.	Crankshaft damper pulley

www.cargeek.ir

www.CarGeek.ir

REMOVAL SERVICE POINTS

<<A>> POWER STEERING OIL PUMP DRIVE BELT REMOVAL

⚠ CAUTION

- **To reuse the drive belt, draw an arrow indicating the rotating direction on the back of the drive belt using chalk to install the same direction.**
- **Hang special tool drive belt remover (MB992276) on the vehicle components (including front sidemembers) using a cord and paper clip to prevent from falling.**

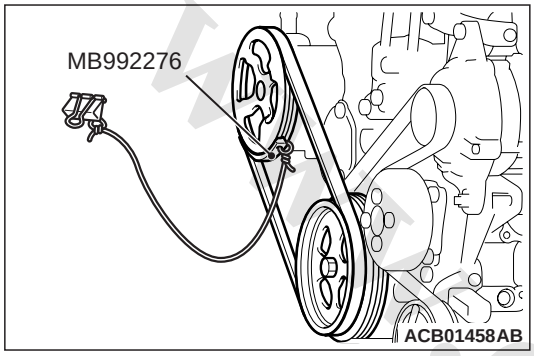

1. Set the special tool in between the power steering oil pump pulley and the drive belt, then hold it with your fingers.

⚠ CAUTION

Be careful that the finger holding the special tool is not pinched.

2. Slightly turn the crankshaft pulley clockwise until the special tool is pinched and held between the power steering oil pump pulley and the drive belt.
3. If the special tool is held, move the finger off.

⚠ CAUTION

If the drive belt is detached, be careful that the special tool is also detached and fallen.

4. Slowly turn the crankshaft pulley clockwise until the drive belt goes aground on the special tool and is detached.
5. Remove the special tool.

<<B>> DRIVE BELT REMOVAL

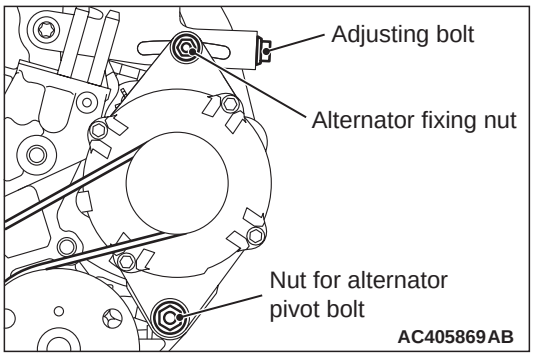

1. Loosen the nut for alternator pivot bolt and alternator fixing nut.

⚠ CAUTION

To reuse the drive belt, draw an arrow indicating the rotating direction on the back of the drive belt using chalk to install the same direction.

2. Turn the adjusting bolt in the anti-clockwise direction (to the left) to remove the drive belt.

<<C>> CRANKSHAFT PULLEY CENTRE BOLT REMOVAL

Use the used drive belt to fix the crankshaft damper pulley in the following procedures, and remove the crankshaft pulley centre bolt.

⚠ CAUTION

- **Do not use the drive belt set up on the vehicles.**
- **Do not use a cracked or damaged drive belt.**

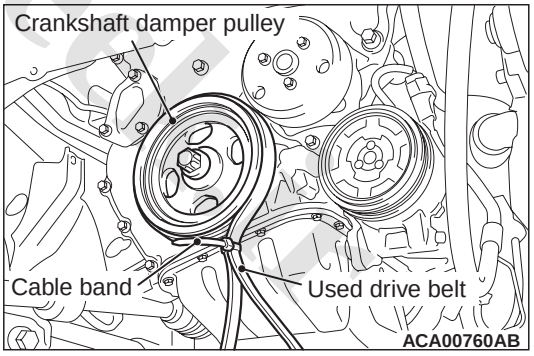

1. Set the used drive belt as shown and hold it with a cable band.

www.cargeek.ir

www.CarGeek.ir

⚠ CAUTION

Do not hang the used drive belt for the crankshaft rotation stopper on the water pump pulley.

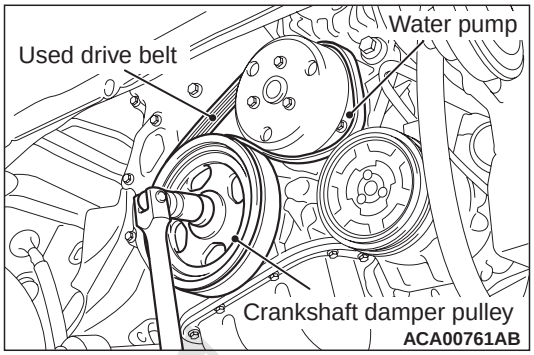

2. Turning the crankshaft damper pulley to the anti-clockwise direction (to the left), loop the used drive belt around the water pump body.
3. Hold the crankshaft damper pulley and remove the crankshaft pulley centre bolt.

INSTALLATION SERVICE POINTS

>>A<< CRANKSHAFT DAMPER PULLEY/CRANKSHAFT PULLEY WASHER/CRANKSHAFT PULLEY CENTRE BOLT INSTALLATION

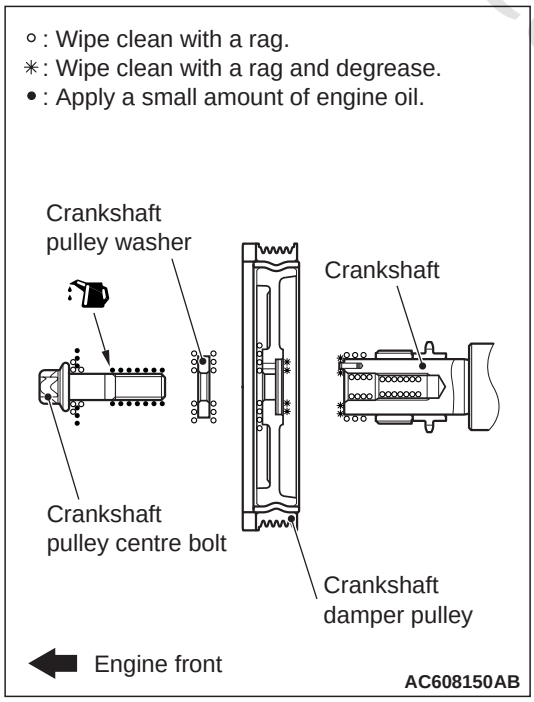

1. Wipe off the dirt on the crankshaft and the crankshaft damper pulley as shown in the figure using a rag.
2. After wiping off the dirt on the crankshaft and crankshaft damper pulley as shown in the figure using a rag, degrease the areas.

   NOTE: Degrease them to prevent drop in the friction coefficient of the pressed area which is caused by oil adhesion.
3. Install the crankshaft damper pulley.
4. Wipe off the dirt on the crankshaft pulley washer and the crankshaft pulley centre bolt as shown in the figure using a rag.
5. Apply an adequate and minimum amount of engine oil to the thread of the crankshaft pulley centre bolt and the lower area of the flange.

⚠ CAUTION

- **Do not use the drive belt set up on the vehicles.**
- **Do not use a cracked or damaged drive belt.**

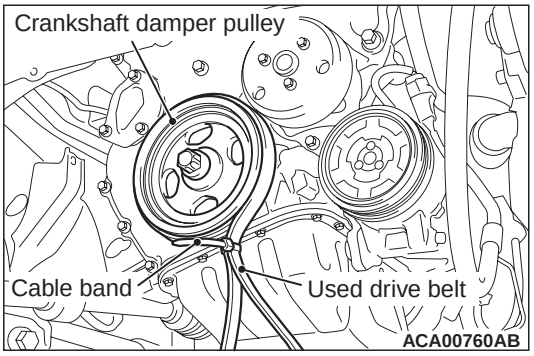

6. Set the used drive belt and hold it with a cable band as during removal.

⚠ CAUTION

Do not hang the used drive belt for the crankshaft rotation stopper on the water pump pulley.

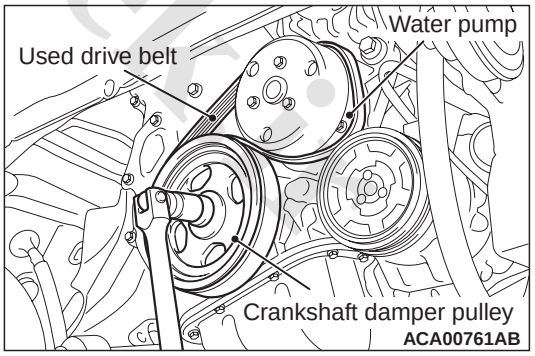

7. Turning the crankshaft damper pulley to the clockwise direction (to the right), loop the used drive belt around the water pump body.
8. Hold the crankshaft damper pulley and tighten the crankshaft pulley centre bolt to the specified torque.

   Tightening torque: 50 N·m

www.cargeek.ir

www.CarGeek.ir

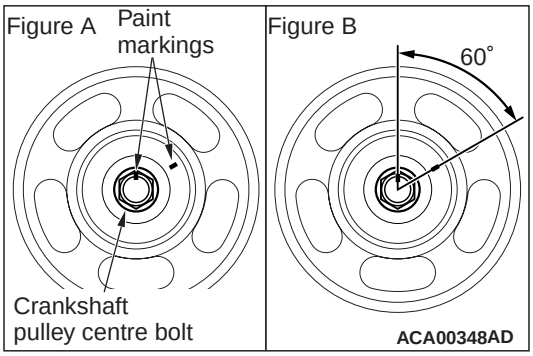

9. As shown in figure A, put a paint mark on one angle of the crankshaft pulley centre bolt. Then, put a paint mark on the crankshaft damper pulley on the extended line of the angle next to the marked angle.

⚠ CAUTION

- **When the tightening angle is smaller than the specified tightening angle, the appropriate tightening capacity cannot be secured.**
- **When the tightening angle is larger than the specified tightening angle, remove the bolt to start from the beginning again according to the procedure.**

10. Tighten the crankshaft pulley centre bolt in a 60 degree angle, and check that the paint mark on the crankshaft pulley centre bolt aligns with the paint mark on the crankshaft damper pulley as shown in figure B.
11. Loosen the crankshaft pulley centre bolt fully.
12. Hold the crankshaft damper pulley and tighten the crankshaft pulley centre bolt to the specified torque.

Tightening torque: 50 N·m

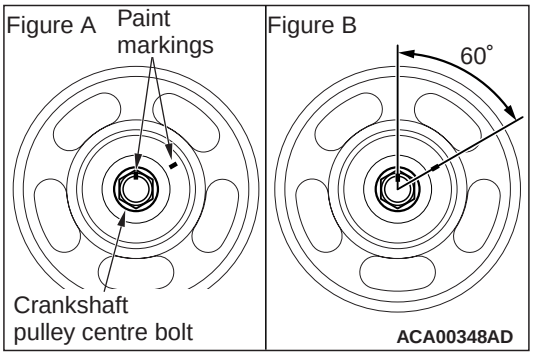

13. As shown in figure A, put a paint mark on one angle of the crankshaft pulley centre bolt. Then, put a paint mark on the crankshaft damper pulley on the extended line of the angle next to the marked angle.

⚠ CAUTION

- **When the tightening angle is smaller than the specified tightening angle, the appropriate tightening capacity cannot be secured.**
- **When the tightening angle is larger than the specified tightening angle, remove the bolt to start from the beginning again according to the procedure.**

14. Tighten the crankshaft pulley centre bolt in a 60 degree angle, and check that the paint mark on the crankshaft pulley centre bolt aligns with the paint mark on the crankshaft damper pulley as shown in figure B.

www.cargeek.ir

www.CarGeek.ir

>>B<< DRIVE BELT INSTALLATION

⚠ CAUTION

- **To reuse the drive belt, install it by aligning the arrow mark on the backside of belt marked at the removal with the rotating direction.**

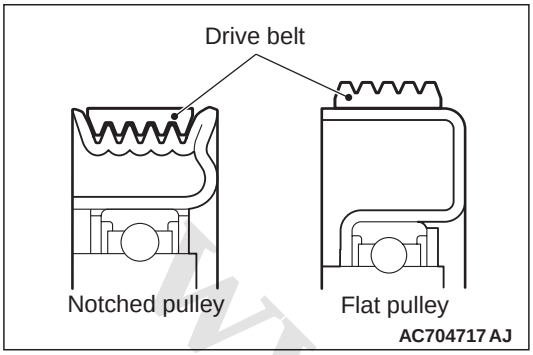

Check that the notches of notched pulley and notches of drive belt are fit correctly.

- **Check that the drive belt is installed in the centre of flat surface of flat pulley.**

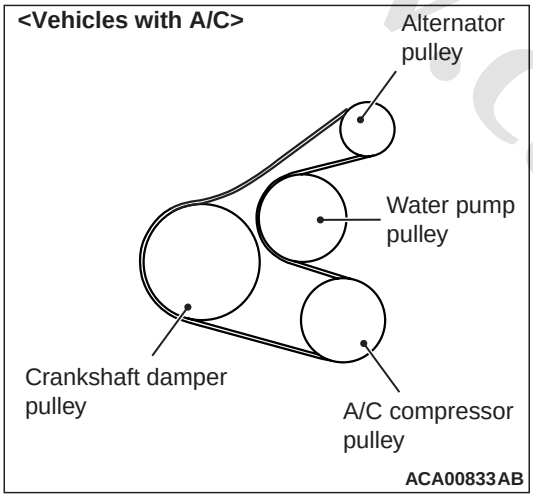

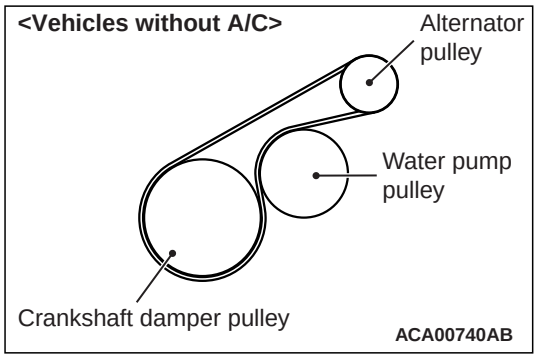

Install the drive belt to each pulley as shown in the figure.

>>C<< POWER STEERING OIL PUMP DRIVE BELT INSTALLATION

⚠ CAUTION

- **To reuse the drive belt, install it by aligning the arrow mark on the backside of belt marked at the removal with the rotating direction.**
- **Check that the notches of the notched pulley and the notches of the drive belt are fit correctly.**

1. Install the drive belt to the power steering oil pump pulley.

⚠ CAUTION

Hang special tool drive belt installer (MB992858) on the vehicle components (including front side-members) using a cord and paper clip to prevent from falling.

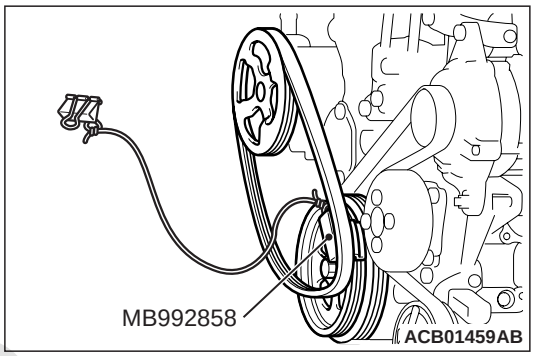

2. Set the special tool and drive belt in the crankshaft pulley and hold it by a finger as shown.

⚠ CAUTION

Be careful that the finger holding the special tool is not pinched.

3. Slightly turn the crankshaft pulley clockwise until the special tool is pinched and held between the crankshaft pulley and the drive belt.
4. If the special tool is held, move the finger off.

⚠ CAUTION

If the drive belt is installed, be careful that the special tool is detached and fallen.

5. Slowly turn the crankshaft pulley clockwise and install the drive belt.
6. Turn the crankshaft pulley until the special tool is detached from the crankshaft pulley and fallen, and then remove the special tool.
7. Turn the crankshaft pulley clockwise on several times and check that the drive belt is installed in the power steering oil pump pulley and the crankshaft pulley securely.

www.cargeek.ir

www.CarGeek.ir

CAMSHAFT

REMOVAL AND INSTALLATION

M1112007801352

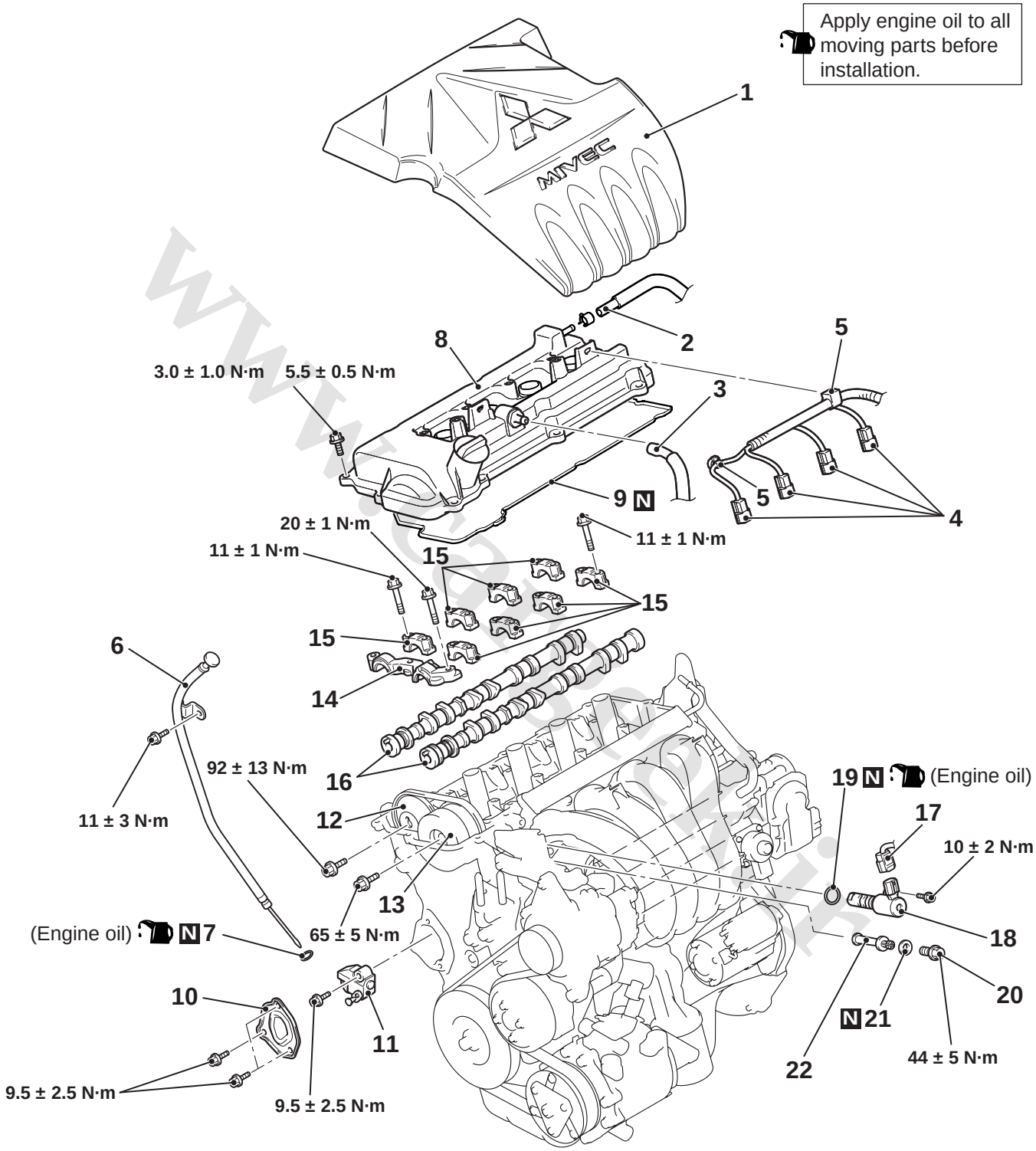

Camshaft removal steps

- Air cleaner assembly removal (Refer to GROUP 15 – Air Cleaner)

1. Engine cover

Camshaft removal steps

- Ignition coil (Refer to GROUP 16 – Ignition System, Ignition Coil)

2. Breather hose connection
3. PCV hose connection

www.cargeek.ir

www.CarGeek.ir

Camshaft removal steps

		4.	Fuel injector connector
		5.	Control harness clamp connection
		6.	Engine oil level gauge and guide assembly
		7.	O-ring
<<A>>	>>F<<	8.	Cylinder head cover assembly
		9.	Cylinder head cover gasket
		•	Valve clearance adjustment (Refer to)
	>>E<<	10.	Timing chain tensioner cover
<<B>>	>>D<<	11.	Timing chain tensioner
<<C>>	>>C<<	12.	Camshaft sprocket
<<C>>	>>C<<	13.	V.V.T. sprocket assembly
<<C>>	>>C<<	14.	Front camshaft bearing cap
<<C>>	>>C<<	15.	Camshaft bearing cap
<<C>>	>>C<<	16.	Camshaft

Oil feeder control valve removal steps

		17.	Oil feeder control valve (OCV) connector
<<D>>	>>B<<	18.	Oil feeder control valve (OCV)
	>>B<<	19.	O-ring
		20.	Oil feeder control valve filter bolt
		21.	Gasket
<<D>>	>>A<<	22.	Oil feeder control valve filter

REMOVAL SERVICE POINTS

<<A>> CYLINDER HEAD COVER ASSEMBLY REMOVAL

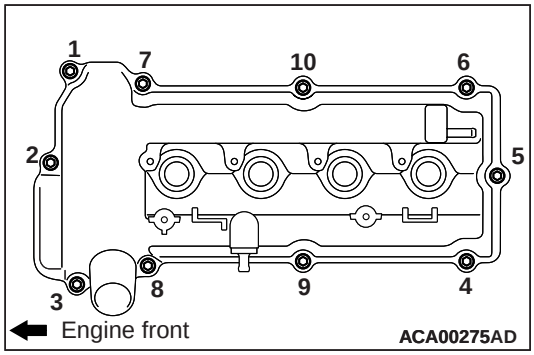

Loosen the cylinder head cover assembly mounting bolts in the order of the numbers shown in the illustration, and remove the cylinder head cover assembly.

<<B>> TIMING CHAIN TENSIONER REMOVAL

⚠ CAUTION

Never turn the crankshaft anti-clockwise.

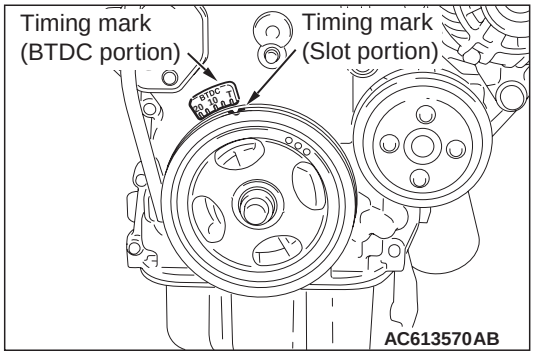

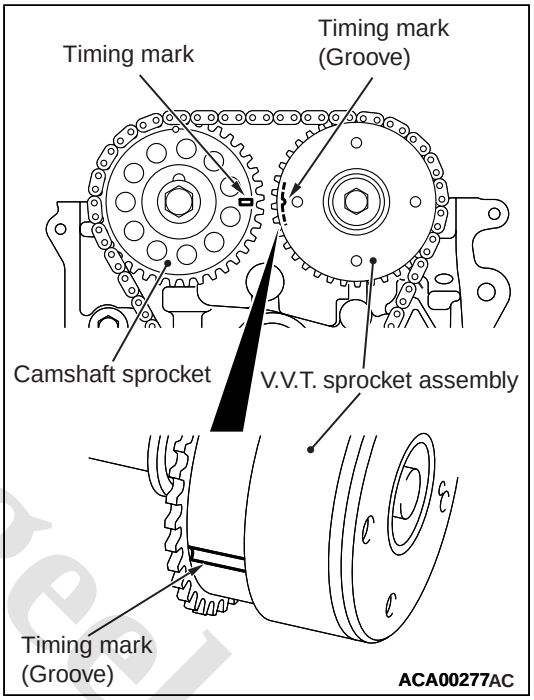

1. Turn the crankshaft clockwise, and align the timing mark of the crankshaft with the T position of BTDC. Then, align the timing mark of the camshaft sprocket (2 conceive areas in front of the camshaft sprocket) and that of the V.V.T. sprocket assembly (the groove of V.V.T. sprocket assembly side face). Then set No.1 cylinder to the top dead centre of compression

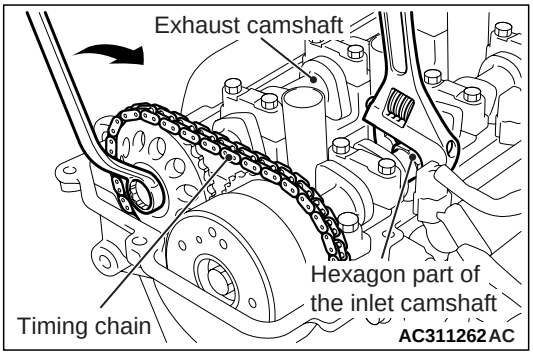

www.cargeek.ir

www.CarGeek.ir

2. While holding the inlet camshaft hexagonal area with a wrench or a similar tool, slightly turn the exhaust camshaft clockwise to tighten the timing chain at the timing chain tensioner side and shorten the plunger of the timing chain tensioner.

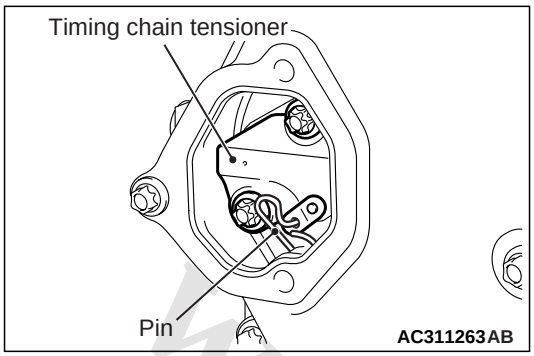

3. With the plunger of the tensioner shortened, insert a pin or a similar tool (3 mm or less in diameter) to the hole shown in the illustration of the timing chain tensioner.

⚠ CAUTION

Do not turn the crankshaft after removing the timing chain tensioner.

4. Loosen the timing chain tensioner mounting bolts, and remove the timing chain tensioner from the timing chain case hole.

<<C>> CAMSHAFT SPROCKET/ V.V.T. SPROCKET ASSEMBLY/FRONT CAMSHAFT BEARING CAP/CAMSHAFT BEARING CAP/ CAMSHAFT REMOVAL

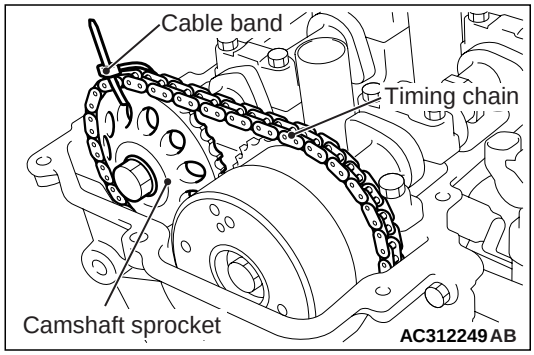

1. Fix the camshaft sprocket and the timing chain using a cable band or a similar tool.

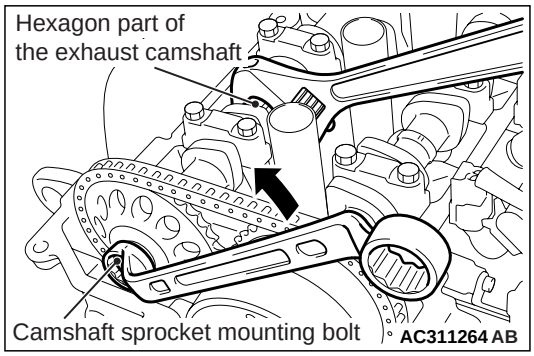

2. While holding the exhaust camshaft hexagonal area with a wrench or a similar tool, loosen the camshaft sprocket mounting bolt.

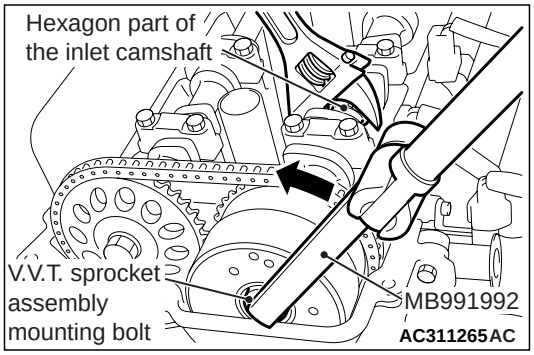

3. While holding the inlet camshaft hexagonal area using a wrench or a similar tool, use special tool torque wrench adapter (MB991992) to loosen the V.V.T. sprocket assembly mounting bolt.

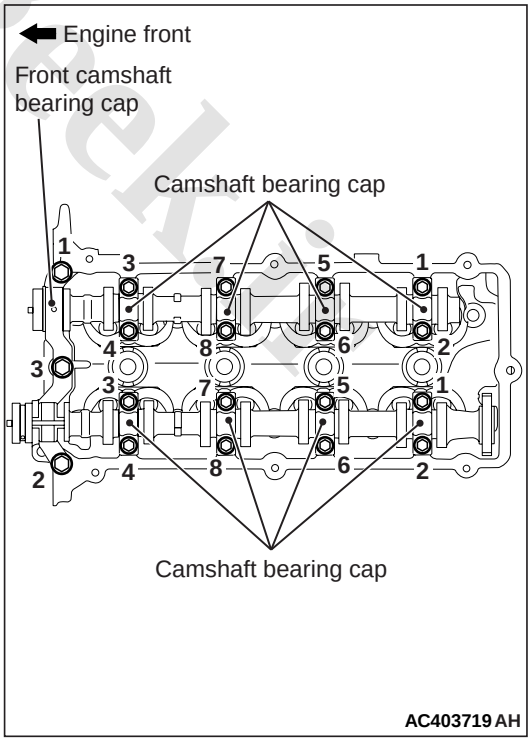

www.cargeek.ir

www.CarGeek.ir

4. Loosen the front camshaft bearing cap mounting bolts, and then loosen each camshaft bearing cap mounting bolts in the order shown. Remove the front camshaft bearing cap and each camshaft bearing cap.

⚠ CAUTION

Do not turn the crankshaft after removing the camshaft sprocket assembly with the timing chain.

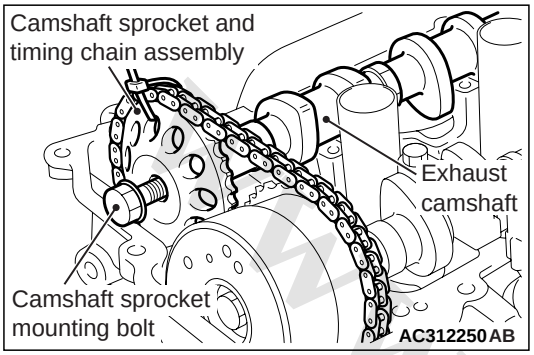

5. Slightly raise the exhaust camshaft with the camshaft sprocket and timing chain assembly from the cylinder head, remove the camshaft sprocket mounting bolt, and disconnect the camshaft sprocket and timing chain assembly from the exhaust camshaft.
6. In the same way as Step 5, disconnect the V.V.T. sprocket assembly and timing chain assembly from the inlet camshaft.

⚠ CAUTION

After disconnecting the camshaft sprocket and the V.V.T. sprocket assembly (with the timing chain for each) from the camshaft, do not dislocate the camshaft sprocket, the V.V.T. sprocket assembly, and the timing chain.

7. After removal, place the camshaft sprocket and timing chain assembly, and the V.V.T. sprocket assembly and timing chain assembly on the timing chain case assembly.

<<D>> OIL FEEDER CONTROL VALVE/OIL FEEDER CONTROL VALVE FILTER REMOVAL

⚠ CAUTION

After removing the oil feeder control valve and the oil feeder control valve filter, be careful that no dust or other objects enter the oil passage in the cylinder head.

INSTALLATION SERVICE POINTS

>>A<< OIL FEEDER CONTROL VALVE FILTER INSTALLATION

⚠ CAUTION

When installing the oil feeder control valve filter, exercise special care to avoid adhesion of foreign objects and damage/deformation of the filter.

>>B<< O-RING/OIL FEEDER CONTROL VALVE INSTALLATION

1. Cover the oil groove of the oil feeder control valve with a cardboard.

⚠ CAUTION

When installing the O-ring to the oil feeder control valve, take care not to damage the O-ring.

2. Apply the engine oil to the O-ring and install it to the oil feeder control valve.

⚠ CAUTION

When installing the oil feeder control valve to the cylinder head, take care not to damage the O-ring.

3. Apply the engine oil to the O-ring and install the oil feeder control valve to the cylinder head.

>>C<< CAMSHAFT/CAMSHAFT BEARING CAP/ FRONT CAMSHAFT BEARING CAP/ V.V.T. SPROCKET ASSEMBLY/CAMSHAFT SPROCKET INSTALLATION

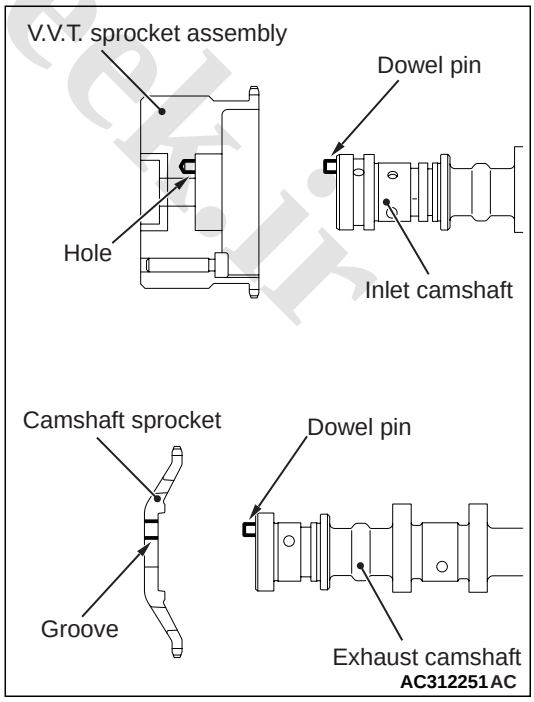

www.cargeek.ir

www.CarGeek.ir

1. First, lift the V.V.T. sprocket assembly side of the camshaft sprocket, V.V.T. sprocket assembly and the timing chain assembly. Then align the dowel pin of the inlet camshaft with the V.V.T. sprocket assembly hole, and assemble the inlet camshaft and the V.V.T. sprocket assembly. Temporarily tighten the mounting bolt.
2. Next, lift the camshaft sprocket side of the camshaft sprocket, V.V.T. sprocket assembly and the timing chain assembly. Then align the dowel pin of the exhaust camshaft with the camshaft sprocket groove, and assemble the exhaust camshaft and the camshaft sprocket. Temporarily tighten the mounting bolt.
3. Place the inlet camshaft and exhaust camshaft on the installing location of the cylinder head.

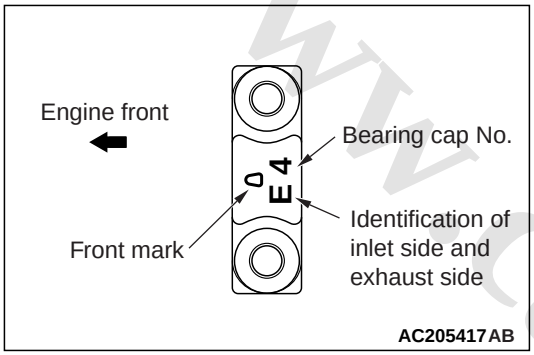

4. The No.2 to No.5 bearing caps are equally shaped for both the inlet and exhaust camshafts. Be sure to correctly install them by referring to the identification marks.

   Identification mark (stamped on the front and No.2 to No.5 bearing caps)
   I: Inlet
   E: Exhaust

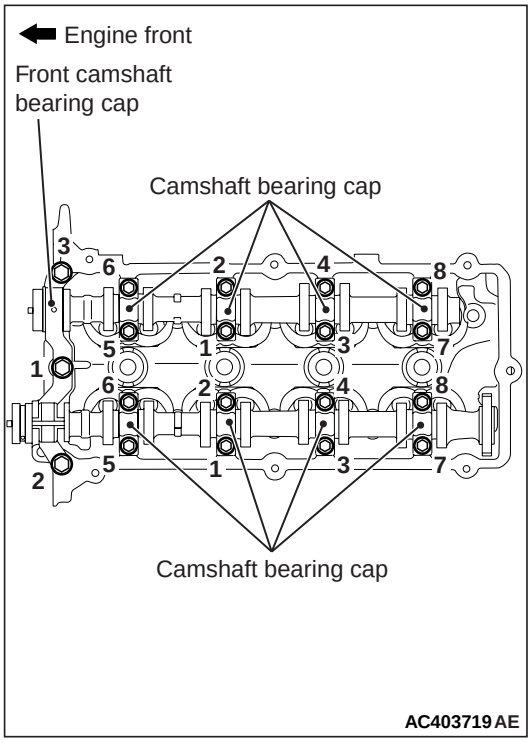

5. Tighten each camshaft bearing cap mounting bolts to the specified torque in the order shown, and then tighten the front camshaft bearing cap mounting bolts as well.

   Tightening torque:
   11 ± 1 N·m (Camshaft bearing cap mounting bolts)
   20 ± 1 N·m (Front camshaft bearing cap mounting bolts)

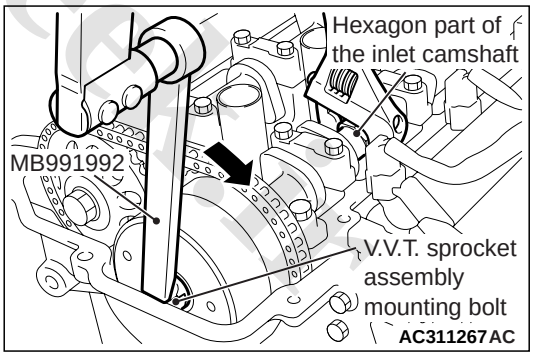

6. While holding the inlet camshaft hexagonal area using a wrench or a similar tool, use special tool torque wrench adapter (MB991992) to tighten the V.V.T. sprocket assembly mounting bolt to the specified torque. Since the V.V.T. sprocket assembly mounting bolt is tightened by special tool (MB991992), calculate the tightening torque by the following formula.

   Tightening torque: (65 ± 5) × {L ÷ (L + 150)} N·m

www.cargeek.ir

www.CarGeek.ir

65 ± 5: Tightening torque of the V.V.T. sprocket assembly mounting bolt (unit: N·m)
L: Distance between the centre of a torque wrench drive and of its handle (unit: mm)
150: Length of special tool (unit: mm)

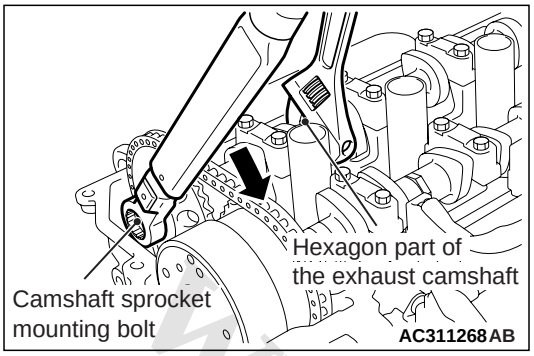

7. While holding the exhaust camshaft hexagonal area using a wrench or similar tool, tighten the camshaft sprocket mounting bolt to the specified torque.

   Tightening torque: 92 ± 13 N·m

>>D<< TIMING CHAIN TENSIONER INSTALLATION

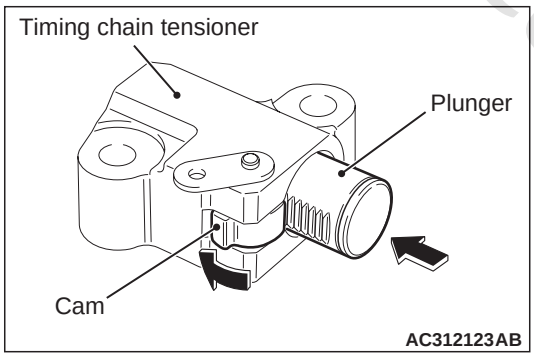

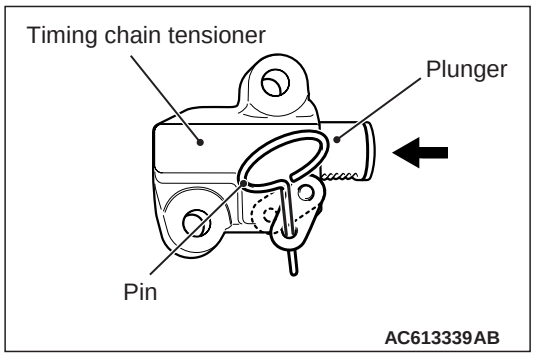

1. Install the timing chain guide, the tensioner lever assembly, and the timing chain tensioner.

   NOTE: When the plunger of the timing chain tensioner is stretched, remove the pin or the similar tool. While pressing the cam in the lower area of the timing chain tensioner, press and shorten the plunger to keep the status with the pin or the similar tool.

2. Tighten the timing chain tensioner mounting bolts to the specified torque.

   Tightening torque: 9.5 ± 2.5 N·m

3. After installing the timing chain tensioner, confirm that the timing marks of each sprocket are aligned with the TDC of No.1 cylinder, and the marked link plate (blue-coloured area) of the timing chain is aligned with the specified position of each sprocket. Then pull out the pin or a similar tool of the timing chain tensioner, and apply tension to the timing chain.

>>E<< TIMING CHAIN TENSIONER COVER INSTALLATION

1. Remove the sealant from the installation face of the timing chain tensioner cover and the timing chain case assembly, and degrease the surface where the sealant is applied.

⚠ CAUTION
After the installation, until a sufficient period of time (one hour or more) elapses, do not apply the engine oil or water to the sealant application area or start the engine.

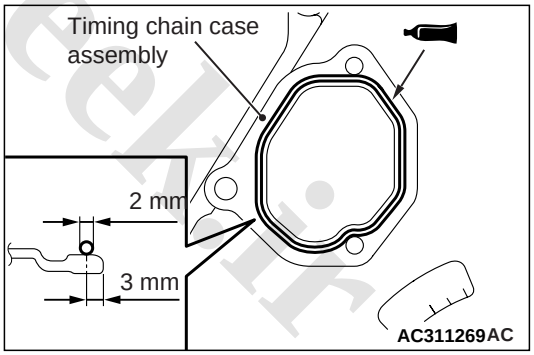

2. Apply a bead of the specified sealant to the mating surface of the timing chain case assembly. Then, install the timing chain tensioner cover to the timing chain case assembly.

   Specified sealant: ThreeBond 1217G or equivalent

   NOTE: Install the timing chain tensioner cover immediately after the application of sealant.

www.cargeek.ir

www.CarGeek.ir

>>F<< CYLINDER HEAD COVER ASSEMBLY INSTALLATION

1. Remove the sealant from the cylinder head cover assembly and the matching area of the cylinder head assembly and the timing chain case assembly, and degrease the surface where the sealant is applied.

⚠ CAUTION

After the installation, until a sufficient period of time (one hour or more) elapses, do not apply the engine oil or water to the sealant application area or start the engine.

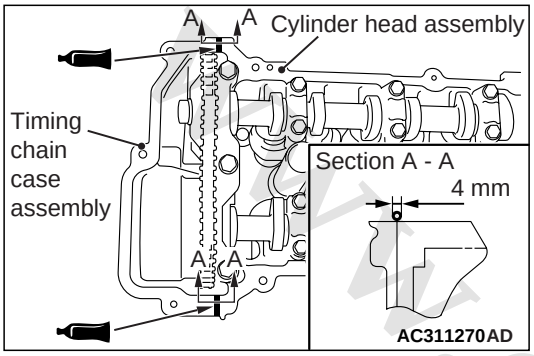

2. Apply specified sealant to the matching area of the cylinder head assembly and the timing chain case assembly as shown, and install the cylinder head cover assembly to the cylinder head assembly.

   Specified sealant: ThreBond 1217G or equivalent

   NOTE: Install the cylinder head cover assembly immediately after the application of sealant.

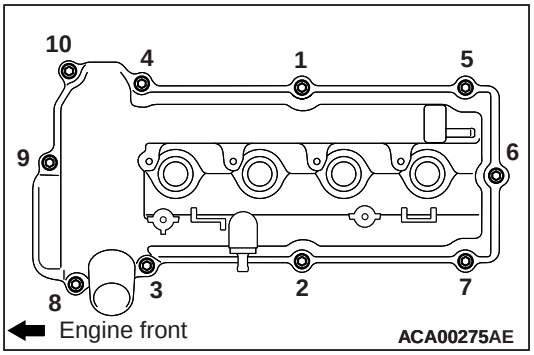

3. Tighten the cylinder head cover assembly mounting bolts to the specified torque in the order of the numbers shown in the illustration.

   Tightening torque: 3.0 ± 1.0 N·m

4. Tighten again the cylinder head cover assembly mounting bolts to the specified torque in the order of number shown in the figure.

   Tightening torque: 5.5 ± 0.5 N·m

www.cargeek.ir

www.CarGeek.ir

VALVE STEM SEAL

REMOVAL AND INSTALLATION

M1112008101624

⚠ CAUTION

***Remove and assemble the marked parts in each cylinder unit.**

Pre-removal operation	Post-installation operation
• Engine Room Under Cover Front B and Engine Room Side Cover (RH) Removal (Refer to GROUP 51 – Under Cover). • Engine Coolant Draining (Refer to GROUP 14 – On-vehicle Service, Engine Coolant Replacement). • Engine Oil Draining (Refer to GROUP 12 – On-vehicle Service, Engine Oil Replacement). • Ignition Coil and Spark Plug Removal (Refer to GROUP 16 – Ignition System, Ignition Coil). • Cylinder Head Cover Assembly Removal (Refer to). • Engine Oil Pan Removal (Refer to). • Timing Chain Removal (Refer to).	• Timing Chain Installation (Refer to). • Engine Oil Pan Installation (Refer to). • Valve Clearance Check (Refer to). • Cylinder Head Cover Assembly Installation (Refer to). • Ignition Coil and Spark Plug Installation (Refer to GROUP 16 – Ignition System, Ignition Coil). • Engine Oil Refilling (Refer to GROUP 12 – On-vehicle Service, Engine Oil Replacement). • Engine Coolant Refilling (Refer to GROUP 14 – On-vehicle Service, Engine Coolant Replacement). • Engine Room Under Cover Front B and Engine Room Side Cover (RH) Installation (Refer to GROUP 51 – Under Cover).

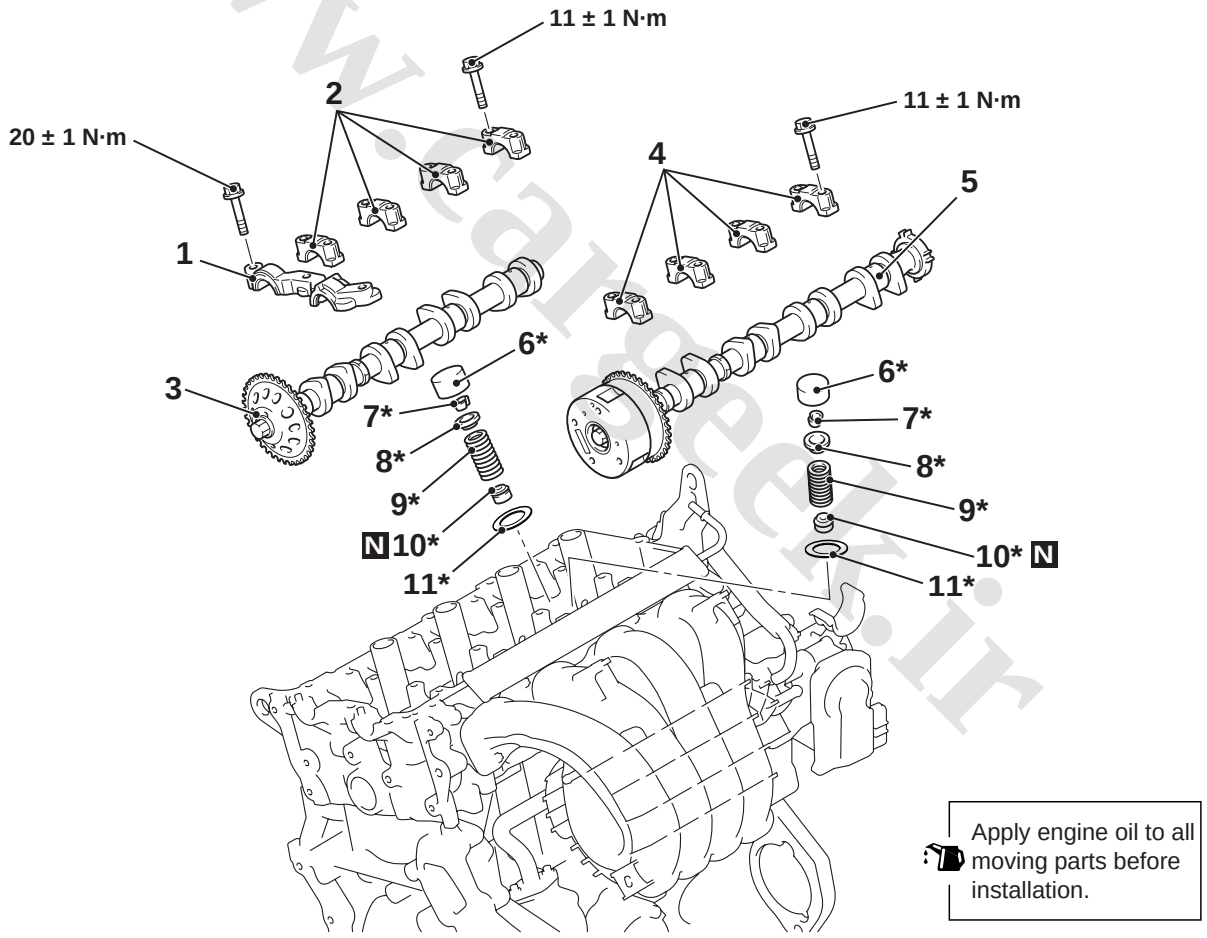

AC700511AD

Removal steps

<<A>>	>>D<<	1.	Front camshaft bearing cap
<<A>>	>>D<<	2.	Camshaft bearing cap (exhaust side)
		3.	Camshaft and camshaft sprocket assembly (exhaust side)

Removal steps (Continued)

<<A>>	>>D<<	4.	Camshaft bearing cap (inlet side)
		5.	Camshaft and V.V.T. sprocket assembly (Inlet side)
<<B>>	>>C<<	6.	Valve tappet
<<C>>	>>B<<	7.	Valve spring retainer lock

www.cargeek.ir

www.CarGeek.ir

Removal steps (Continued)

8. Valve spring retainer
9. Valve spring

<<D>> >>A<< 10. Valve stem seal

>>A<< 11. Valve spring seat

REMOVAL SERVICE POINTS

<<A>> FRONT CAMSHAFT BEARING CAP / CAMSHAFT BEARING CAP REMOVAL

1. Temporarily install the engine oil pan which was removed at the timing chain removal (Refer to).

⚠ CAUTION

When supporting the engine and transmission assembly with a garage jack, be careful not to deform the engine oil pan.

2. Place a garage jack against the engine oil pan with a piece of wood in between to support the engine and transmission assembly.

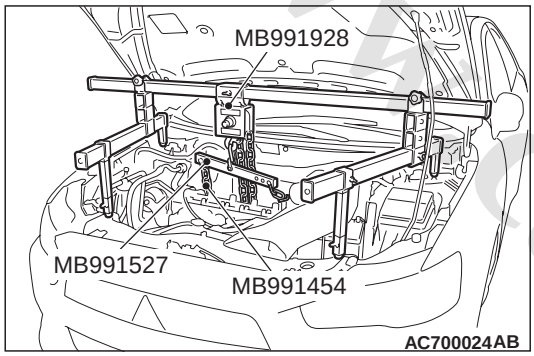

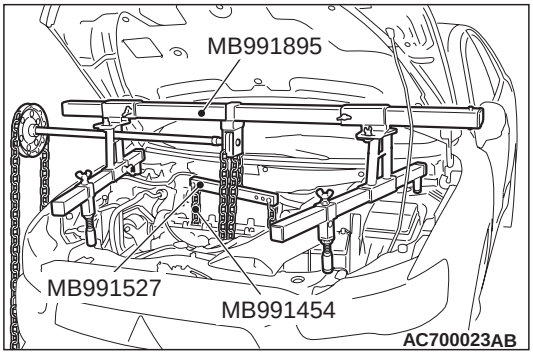

3. Remove special tool engine hanger (MB991928 or MB991895) which was installed for supporting the engine and transmission assembly when the timing chain was removed.

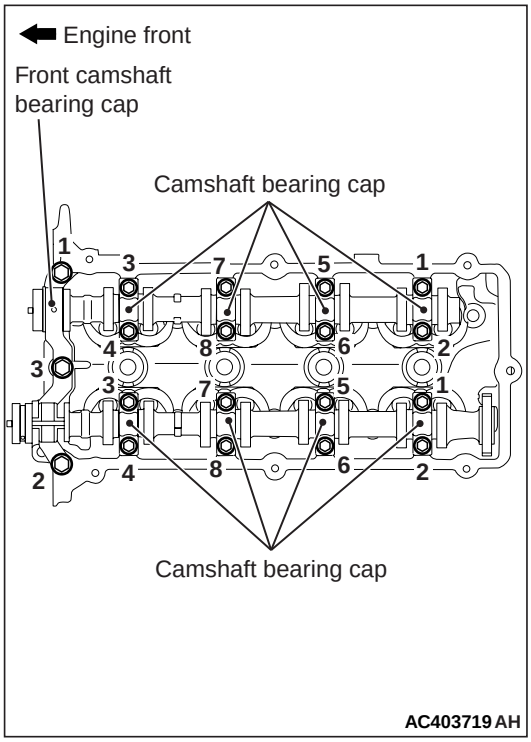

4. Loosen the front camshaft bearing cap mounting bolts, and then loosen each camshaft bearing cap mounting bolts in the order shown. Remove the front camshaft bearing cap and each camshaft bearing cap.

<<B>> VALVE TAPPET REMOVAL

⚠ CAUTION

- **Do not use pliers or other tools to remove the valve tappets. Always remove them by hand.**
- **When reusing the removed valve tappet, it has to be installed in the same position as before. Be sure to put a tab that shows the original installation position on the valve tappet when storing it.**

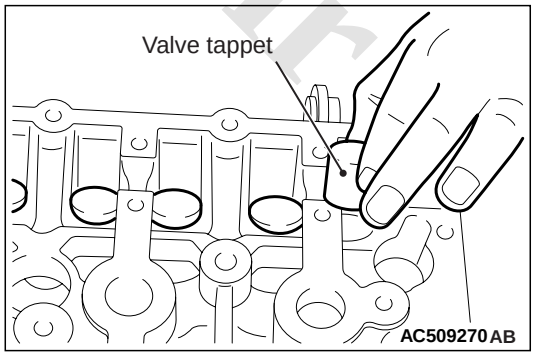

Remove all of the valve tappets by hand.

<<C>> VALVE SPRING RETAINER LOCK REMOVAL

www.cargeek.ir

www.CarGeek.ir

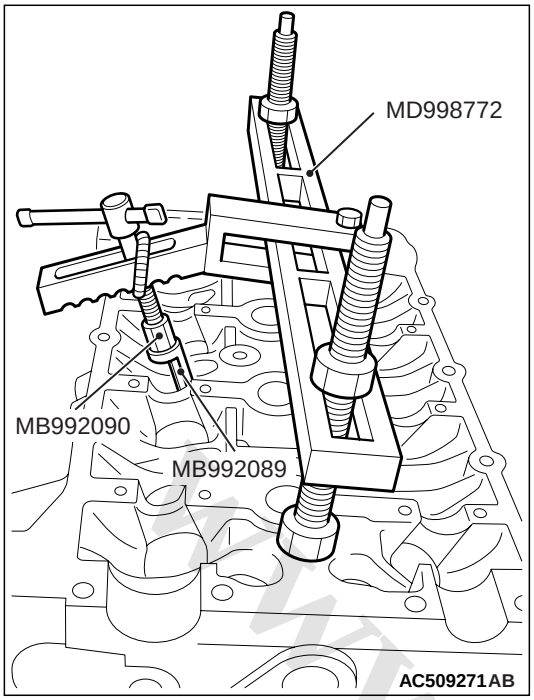

1. Screw in special tool retainer holder attachment (MB992090) to special tool valve spring compressor (MD998772), and assemble special tool retainer holder C (MB992089).

⚠ CAUTION

When removing the valve spring retainer lock, leave the piston of the cylinder in the TDC (Top Dead Centre) position. The valve may fall into the cylinder if the piston is not properly in the TDC position.

2. Install special tool MD998772 (with special tools MB992090 and MB992089 attached) to the cylinder head and compress the valve spring. Then, remove the valve spring retainer lock.

<<D>> VALVE STEM SEAL REMOVAL

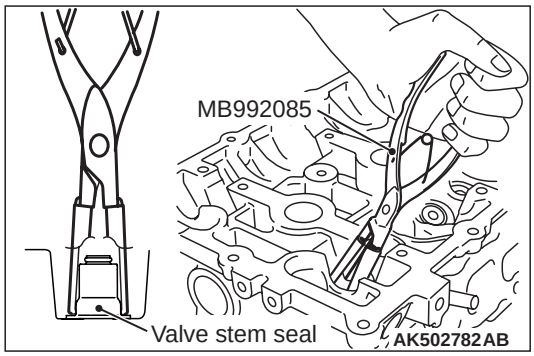

Use special tool valve stem seal pliers (MB992085) to nip the base of the stem seal (where the outside diameter is larger) securely, and remove it by twisting it to the left and right.

INSTALLATION SERVICE POINTS

>>A<< VALVE SPRING SEAT / VALVE STEM SEAL INSTALLATION

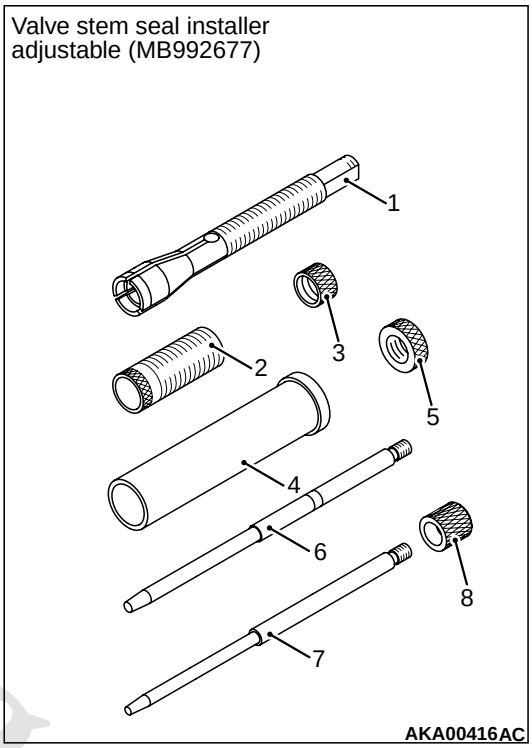

Use a special tool to install the valve stem seal, obeying the following procedures:

1. The special tool valve stem seal installer adjustable (MB992677) is composed of the components shown in the illustration.

   1: Chuck

   2: Sleeve

   3: Rock nut (small)

   4: Outer pipe

   5: Rock nut (large)

   6: Guide pin (5.9)

   7: Guide pin (4.9)

   8: Cap

2. Adjust the inside chuck diameter, obeying the following procedures.

www.cargeek.ir

www.CarGeek.ir

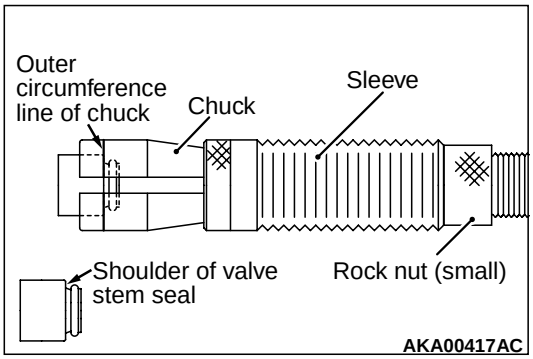

(1) Install the sleeve to the chuck as shown in the illustration.
(2) Install the shoulder of the valve stem seal to the chuck, aligning with the outer circumference line of the chuck as shown in the illustration.
(3) Turn the sleeve to wring the chuck.
(4) Stop the sleeve at the position where you can easily remove the valve stem seal by hand.
(5) Use the (small) rock nut to fix the sleeve.

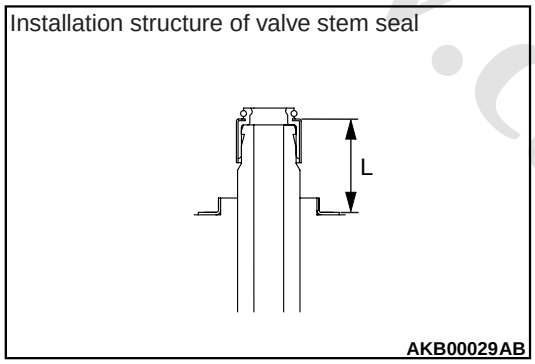

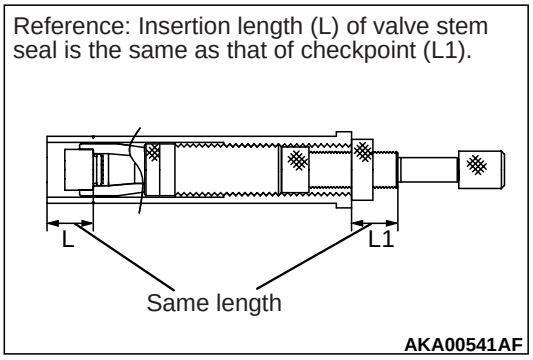

3. Adjust the stem seal insertion length, obeying the following procedures.

   Set the valve stem seal insertion length (L) of 14.4mm.

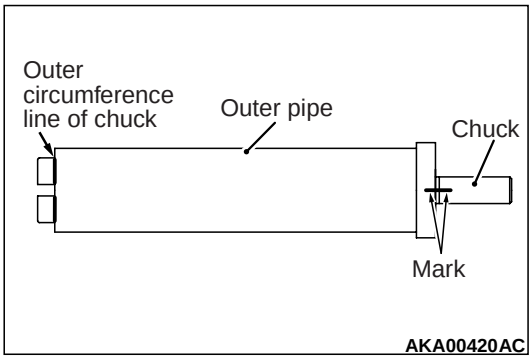

(1) The position, in which the end face of the outer pipe is aligned with the outer circumference line of the chuck, is 0mm of the insertion length. Insert the chuck and the sleeve into the outer pipe to fit the nut as shown in the illustration.
(2) Turn the chuck to adjust the valve stem seal insertion length.

   NOTE: The insertion length can change by 1mm per the chuck turn.
   To easily know how many times the chuck is turned, put the mark at the position shown in the illustration.

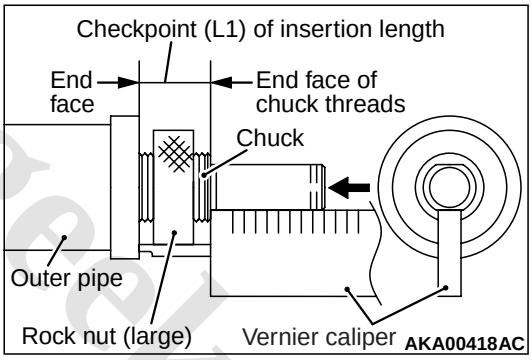

(3) Use a vernier caliper to measure the checkpoint (L1) of the insertion length shown in the illustration. Check the insertion length.
(4) Use the (large) rock nut to fix the sleeve.

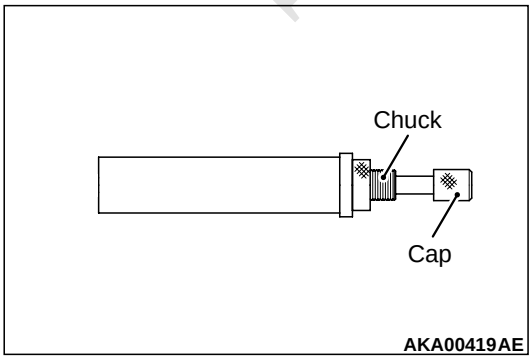

4. Install the cap to the chuck.
5. Apply the engine oil to the valve stem seal to set the chuck.

www.cargeek.ir

www.CarGeek.ir

6. Install the valve spring seat.

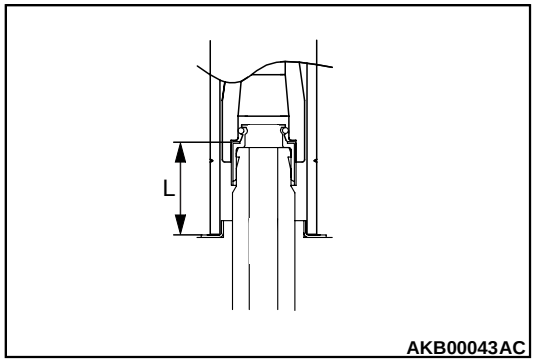

7. Use the plastic hammer to insert the valve stem seal.

>>B<< VALVE SPRING RETAINER LOCK INSTALLATION

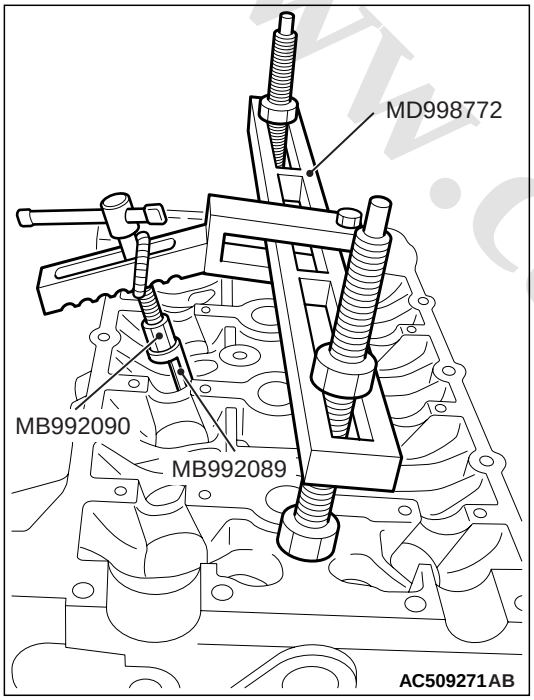

In the same manner as removal, use special tool valve spring compressor (MD998772) with special tool retainer holder attachment (MB992090) and special tool retainer holder C (MB992089) attached to compress the valve spring, and install the valve spring retainer lock.

>>C<< VALVE TAPPET INSTALLATION

1. Apply a small amount of engine oil to the valve tappets.

⚠ CAUTION

- **Do not use pliers or other tools to install the valve tappets. Always install them by hand.**
- **Be sure to install the valve tappets in the same position as before.**

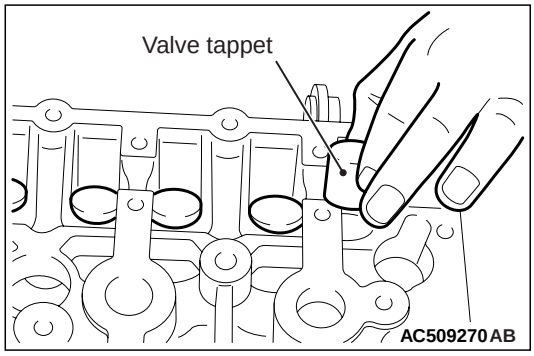

2. Install the valve tappet to the cylinder head by hand.

>>D<< CAMSHAFT BEARING CAP/FRONT CAMSHAFT BEARING CAP INSTALLATION

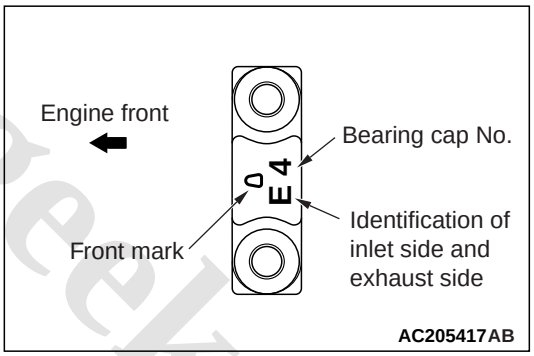

1. The No.2 to No.5 bearing caps are equally shaped for both the inlet and exhaust camshafts. Be sure to correctly install them by referring to the identification marks.

   Identification mark (stamped on the front and No.2 to No.5 bearing caps)

   I: Inlet

   E: Exhaust

www.cargeek.ir

www.CarGeek.ir

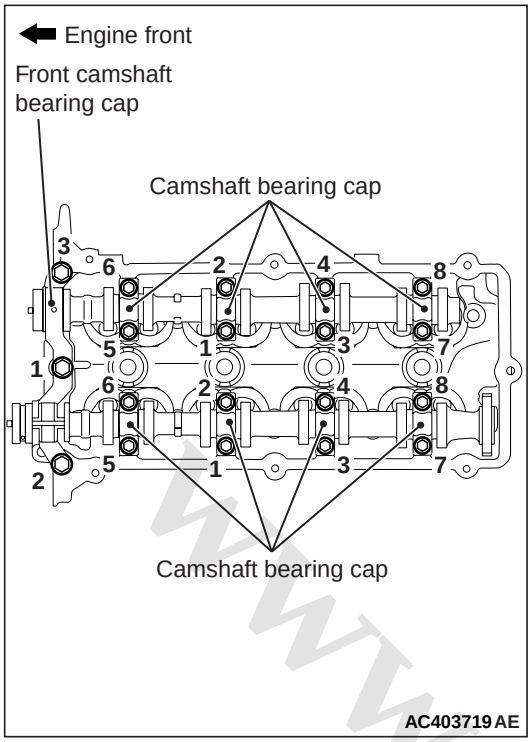

2. Tighten each camshaft bearing cap mounting bolts to the specified torque in the order shown, and then tighten the front camshaft bearing cap mounting bolts as well.

   Tightening torque:

   11 ± 1 N·m (Camshaft bearing cap mounting bolts)

   20 ± 1 N·m (Front camshaft bearing cap mounting bolts)

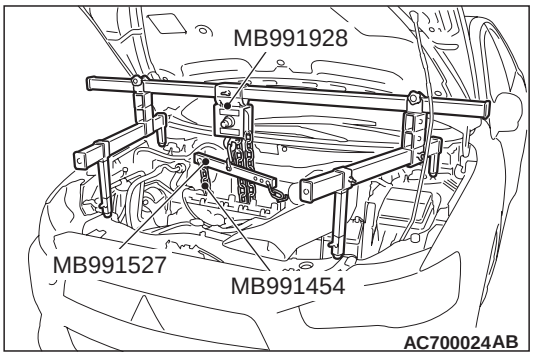

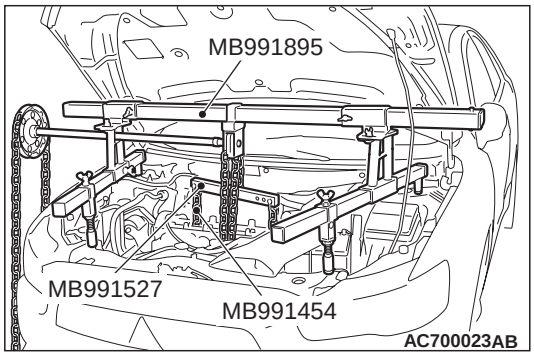

3. Install special tool engine hanger (MB991928 or MB991895) which was installed for supporting the engine and transmission assembly when the timing chain was removed (Refer to).
4. Remove the garage jack which supports the engine and transmission assembly.
5. Remove the engine oil pan installed temporarily.

www.cargeek.ir

www.CarGeek.ir

OIL PAN

REMOVAL AND INSTALLATION

M1112002803126

Pre-removal Operation	Post-installation Operation
• Engine Room Under Cover Front B and Engine Room Side Cover (RH) Removal (Refer to GROUP 51 – Under Cover). • Engine Oil Draining (Refer to GROUP 12 – On-vehicle Service, Engine Oil Replacement). • Crankshaft Damper Pulley Removal (Refer to).	• Crankshaft Damper Pulley Installation (Refer to). • Engine Oil Refilling (Refer to GROUP 12 – On-vehicle Service, Engine Oil Replacement). • Engine Room Under Cover Front B and Engine Room Side Cover (RH) Installation (Refer to GROUP 51 – Under Cover).

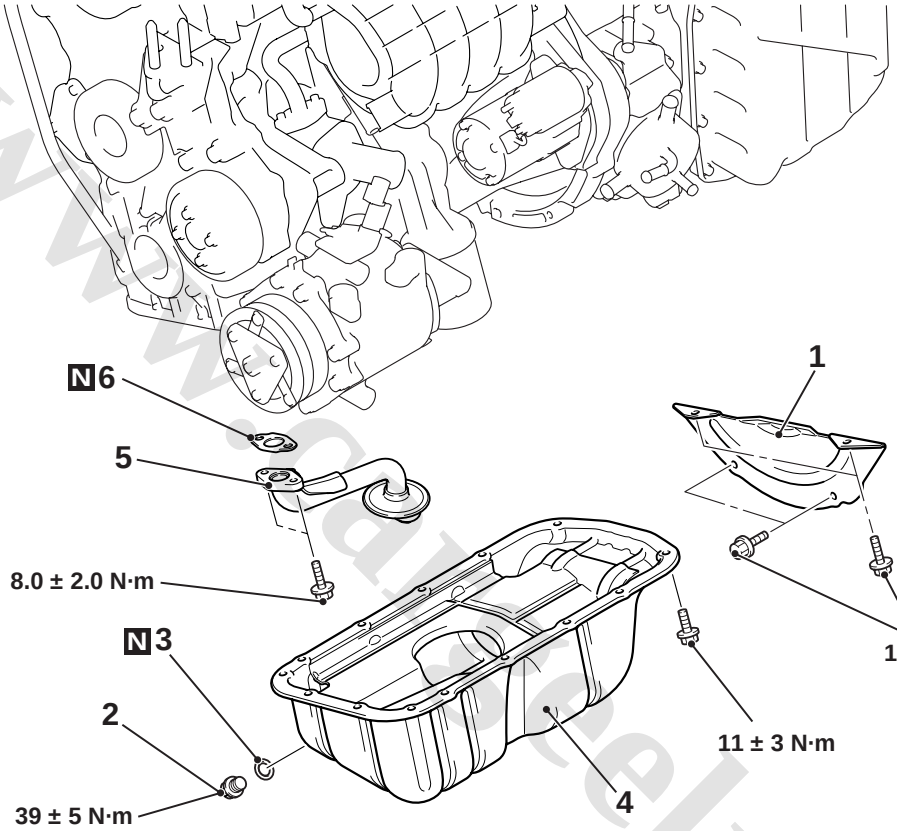

Removal steps

- Engine oil level gauge
1. Bell housing cover
2. Engine oil pan drain plug
3. Engine oil pan drain plug gasket
<<A>> >>A<< 4. Engine oil pan
5. Engine oil screen assembly
6. Gasket

REMOVAL SERVICE POINT

<<A>> ENGINE OIL PAN REMOVAL

1. Remove the engine oil pan mounting bolts.

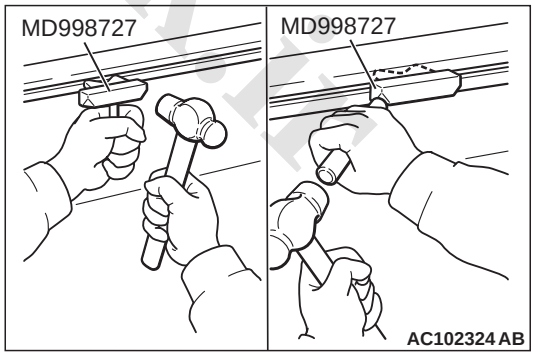

2. Use special tool oil pan FIPG cutter (MD998727) to remove the engine oil pan.

INSTALLATION SERVICE POINTS

>>A<< ENGINE OIL PAN INSTALLATION

1. Remove sealant from the engine oil pan and cylinder block surfaces.

www.cargeek.ir

www.CarGeek.ir

⚠ CAUTION

As oil leak is likely to occur at both ends of the rear side of the engine oil pan, be sure to apply the specified sealant as shown.

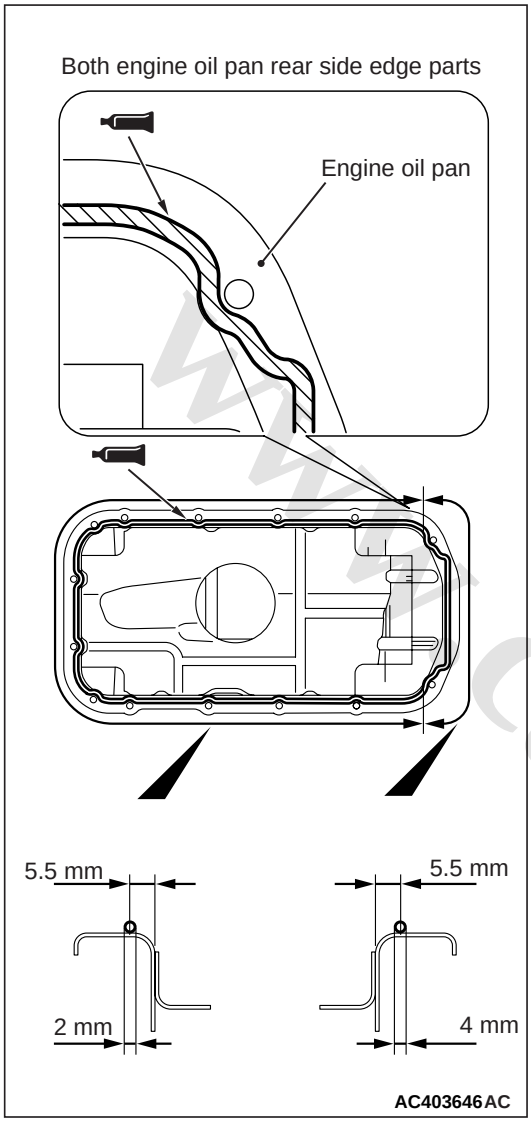

2. Apply a bead of the sealant to the cylinder block mating surface of the engine oil pan as shown.

   Specified sealant: ThreBond 1217G or equivalent

   NOTE: Install the engine oil pan immediately after the application of sealant.

⚠ CAUTION

After the installation, until a sufficient period of time (one hour or more) elapses, do not apply the engine oil or water to the sealant application area or start the engine.

3. Tighten the engine oil pan mounting bolts to the specified torque.

   Tightening torque: 11 ± 3 N·m

INSPECTION

M1112002900889

- Check the engine oil pan for cracks.
- Check the engine oil pan sealant-coated surface for damage and deformation.

www.cargeek.ir

www.CarGeek.ir

CRANKSHAFT OIL SEAL

REMOVAL AND INSTALLATION

M1112003104231

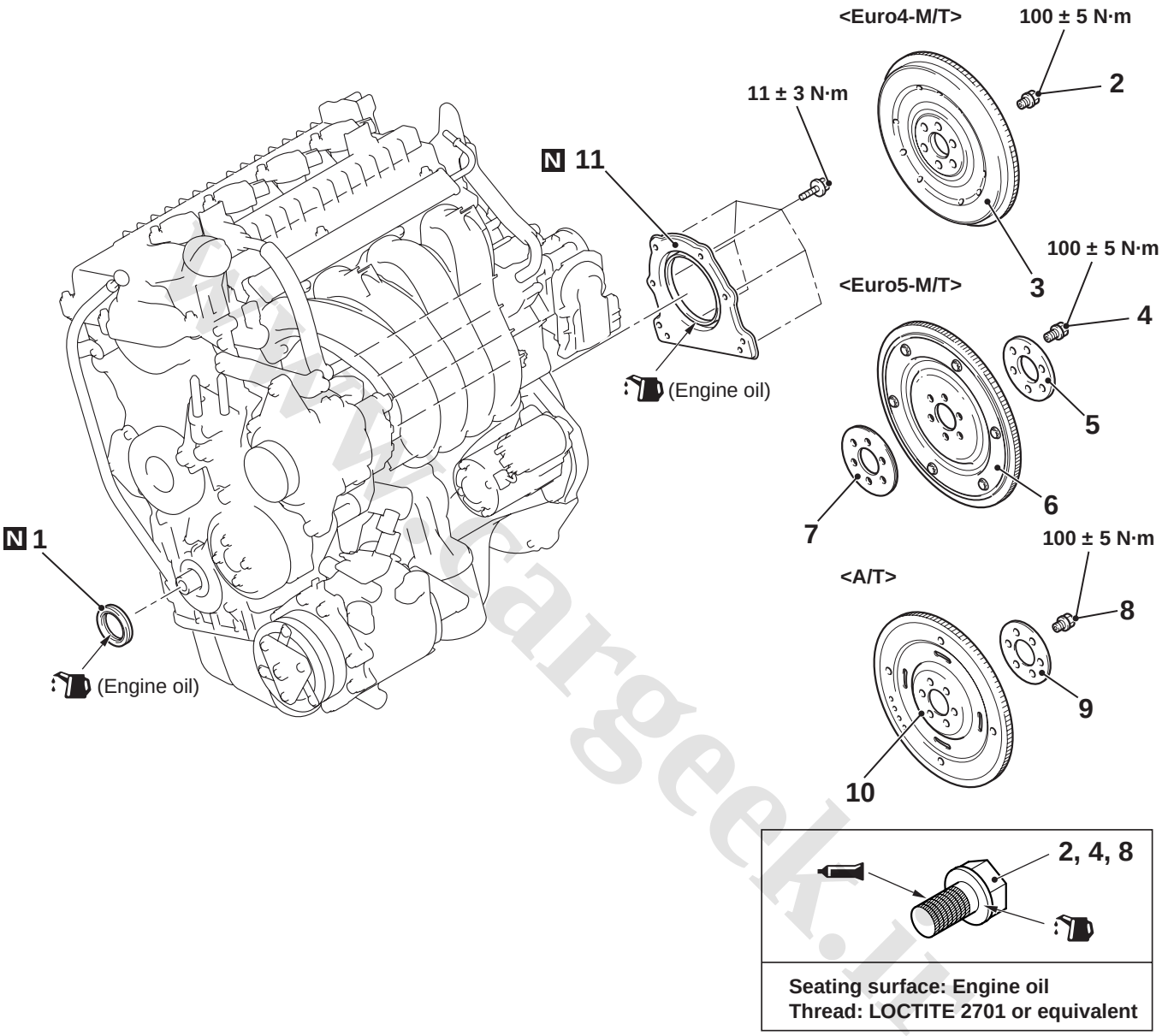

Crankshaft front oil seal removal steps

- Crankshaft damper pulley (Refer to)

>>C<< 1. Crankshaft front oil seal

Crankshaft rear oil seal removal steps <Euro4-M/T>

- Transmission assembly (Refer to GROUP 22A – Transmission Assembly)
- Clutch cover and clutch disc (Refer to GROUP 21E – Clutch)
- Engine oil pan (Refer to)

<<A>> >>B<< 2. Flywheel bolt

>>B<< 3. Flywheel assembly

>>A<< 11. Crankshaft rear oil seal case assembly

Crankshaft rear oil seal removal steps <Euro5-M/T>

- Transmission assembly (Refer to GROUP 22A – Transmission Assembly)
- Clutch cover and clutch disc (Refer to GROUP 21E – Clutch)
- Engine oil pan (Refer to)

Crankshaft rear oil seal removal steps <Euro4-M/T> (Continued)

www.cargeek.ir

www.CarGeek.ir

Crankshaft rear oil seal removal steps <Euro5-M/T> (Continued)

<<A>> >>B<< 4. Flywheel bolt
>>B<< 5. Adapter plate
>>B<< 6. Flywheel assembly
>>B<< 7. Adapter plate
>>A<< 11. Crankshaft rear oil seal case assembly

Crankshaft rear oil seal removal steps <A/T>

- Transmission assembly (Refer to GROUP 23C – Transmission Assembly)
- Engine oil pan (Refer to)

<<A>> >>B<< 8. Drive plate bolt
>>B<< 9. Adapter plate
>>B<< 10. Drive plate assembly
>>A<< 11. Crankshaft rear oil seal case assembly

REMOVAL SERVICE POINT

<<A>> FLYWHEEL BOLT <M/T>/DRIVE PLATE BOLT <A/T> REMOVAL

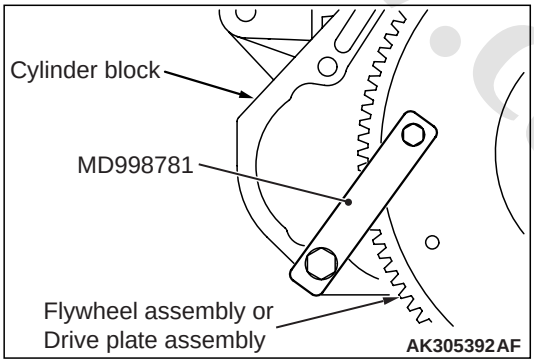

1. Fix the flywheel assembly <M/T> or drive plate assembly <A/T> using special tool flywheel stopper (MD998781).
2. Remove the flywheel bolts <M/T> or drive plate bolts <A/T>.

INSTALLATION SERVICE POINTS

>>A<< CRANKSHAFT REAR OIL SEAL CASE ASSEMBLY INSTALLATION

1. Remove sealant from the crankshaft rear oil seal case assembly mounting surface of the cylinder block, and degrease the surface where the sealant is applied.

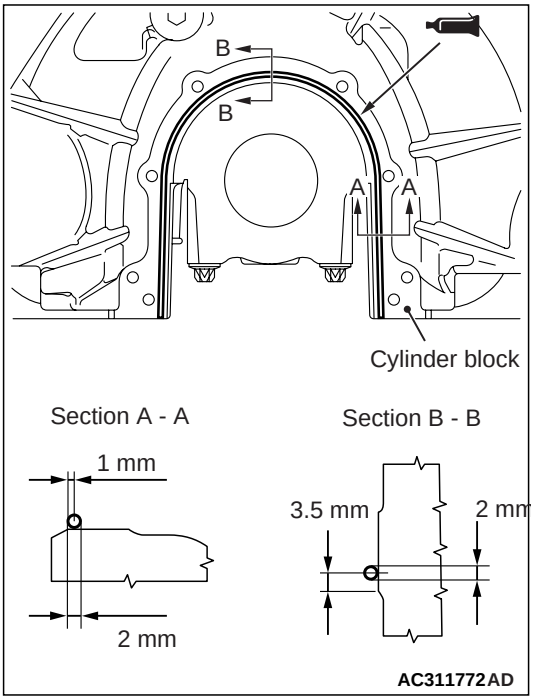

2. Apply a bead of specified sealant to the crankshaft rear oil seal case assembly mating surface of the cylinder block as shown.

   Specified sealant: ThreeBond 1217G or equivalent

   NOTE: Install the crankshaft rear oil seal case assembly immediately after applying sealant.

⚠ CAUTION

- **Install the crankshaft rear oil seal case assembly not to damage the crankshaft rear oil seal.**
- **After the installation, until a sufficient period of time (one hour or more) elapses, do not apply the engine oil or water to the sealant application area or start the engine.**

3. Install the crankshaft rear oil seal case assembly to the cylinder block.
4. Tighten the crankshaft rear oil seal case assembly mounting bolts to the specified torque.

   Tightening torque: 11 ± 3 N·m

>>B<< DRIVE PLATE ASSEMBLY <A/T>/ ADAPTER PLATE <A/T>/DRIVE PLATE BOLT <A/T>/FLYWHEEL ASSEMBLY <M/T>/FLYWHEEL BOLT <M/T> INSTALLATION

1. Remove the sealant, engine oil, and other adhering materials from the flywheel assembly <M/T> or drive plate assembly <A/T> installation face, adapter plate <A/T>, crankshaft screw hole, and flywheel bolts <M/T> or drive plate bolts <A/T>.

www.cargeek.ir

www.CarGeek.ir

2. Install the flywheel assembly <M/T> or drive plate assembly <A/T> to the crankshaft.

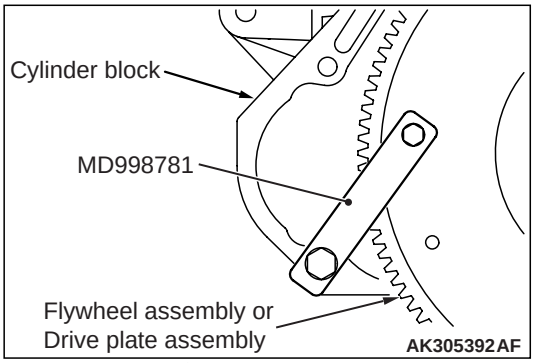

3. Fix the flywheel assembly <M/T> or drive plate assembly <A/T> using special tool flywheel stopper (MD998781) in the same manner as removal.

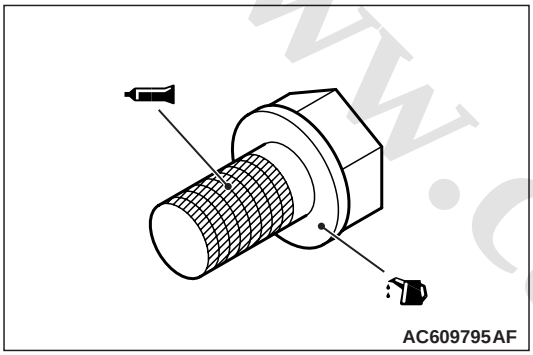

4. Apply a small amount of engine oil to the installation face of the flywheel bolts <M/T> or drive plate bolts <A/T>.
5. Apply specified sealant to the flywheel bolts <M/T> or drive plate bolts <A/T> threads.

   Specified sealant: LOCTITE 2701 or equivalent

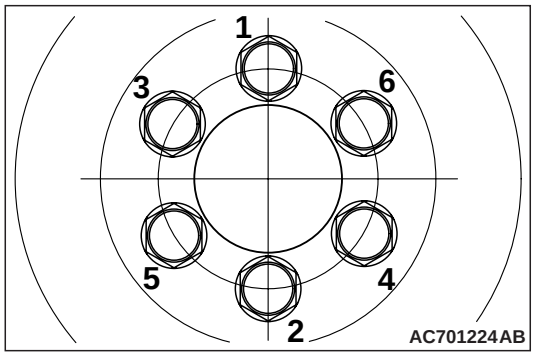

6. Tighten the flywheel bolts <M/T> or drive plate bolts <A/T> to the specified torque in two or three steps in the order shown in the illustration.

   Tightening torque: 100 ± 5 N·m

>>C<< CRANKSHAFT FRONT OIL SEAL INSTALLATION

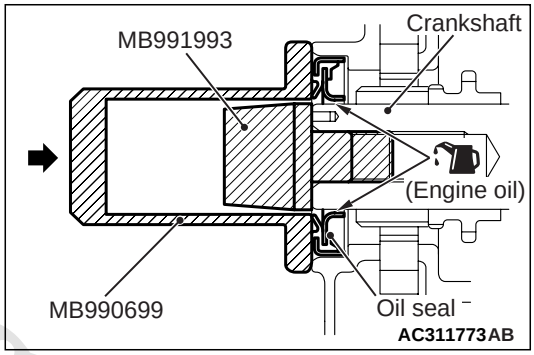

1. Apply a small amount of engine oil to the outer circumference of special tool crankshaft front oil seal guide (MB991993) and install it to the crankshaft.
2. Apply a small amount of engine oil to the entire inner circumference of the oil seal lip.

⚠ CAUTION

When installing the crankshaft front oil seal, be careful to avoid damage to the crankshaft front oil seal.

3. Using special tool differential oil seal installer (MB990699), drive the oil seal so that it is flush with the timing chain case assembly.

www.cargeek.ir

www.CarGeek.ir

CYLINDER HEAD GASKET

REMOVAL AND INSTALLATION

M1112004005111

Pre-removal Operation	Post-installation Operation
• Fuel Line Pressure Reduction (Refer to GROUP 13A – On-vehicle Service, How to Reduce Pressurized Fuel Lines). • Engine Room Under Cover Front B and Engine Room Side Cover (RH) Removal (Refer to GROUP 51 – Under Cover). • Engine Oil Draining (Refer to GROUP 12 – On-vehicle Service, Engine Oil Replacement). • Engine Coolant Draining (Refer to GROUP 14 – On-vehicle Service, Engine Coolant Replacement). • Air Cleaner Intake Hose and Air Cleaner Assembly Removal (Refer to GROUP 15 – Air Cleaner). • Battery and Battery Tray Removal (Refer to GROUP 54A – Battery). • Exhaust Manifold Removal (Refer to GROUP 15 – Exhaust Manifold). • Timing Chain Removal (Refer to).	• Timing Chain Installation (Refer to). • Exhaust Manifold Installation (Refer to GROUP 15 – Exhaust Manifold). • Battery and Battery Tray Installation (Refer to GROUP 54A – Battery). • Air Cleaner Intake Hose and Air Cleaner Assembly Installation (Refer to GROUP 15 – Air Cleaner). • Engine Coolant Refilling (Refer to GROUP 14 – On-vehicle Service, Engine Coolant Replacement). • Engine Oil Refilling (Refer to GROUP 12 – On-vehicle Service, Engine Oil Replacement). • Alternator and Others Belt Tension Check and Adjustment (Refer to). • Engine Room Under Cover Front B and Engine Room Side Cover (RH) Installation (Refer to GROUP 51 – Under Cover). • Fuel Leak Check.

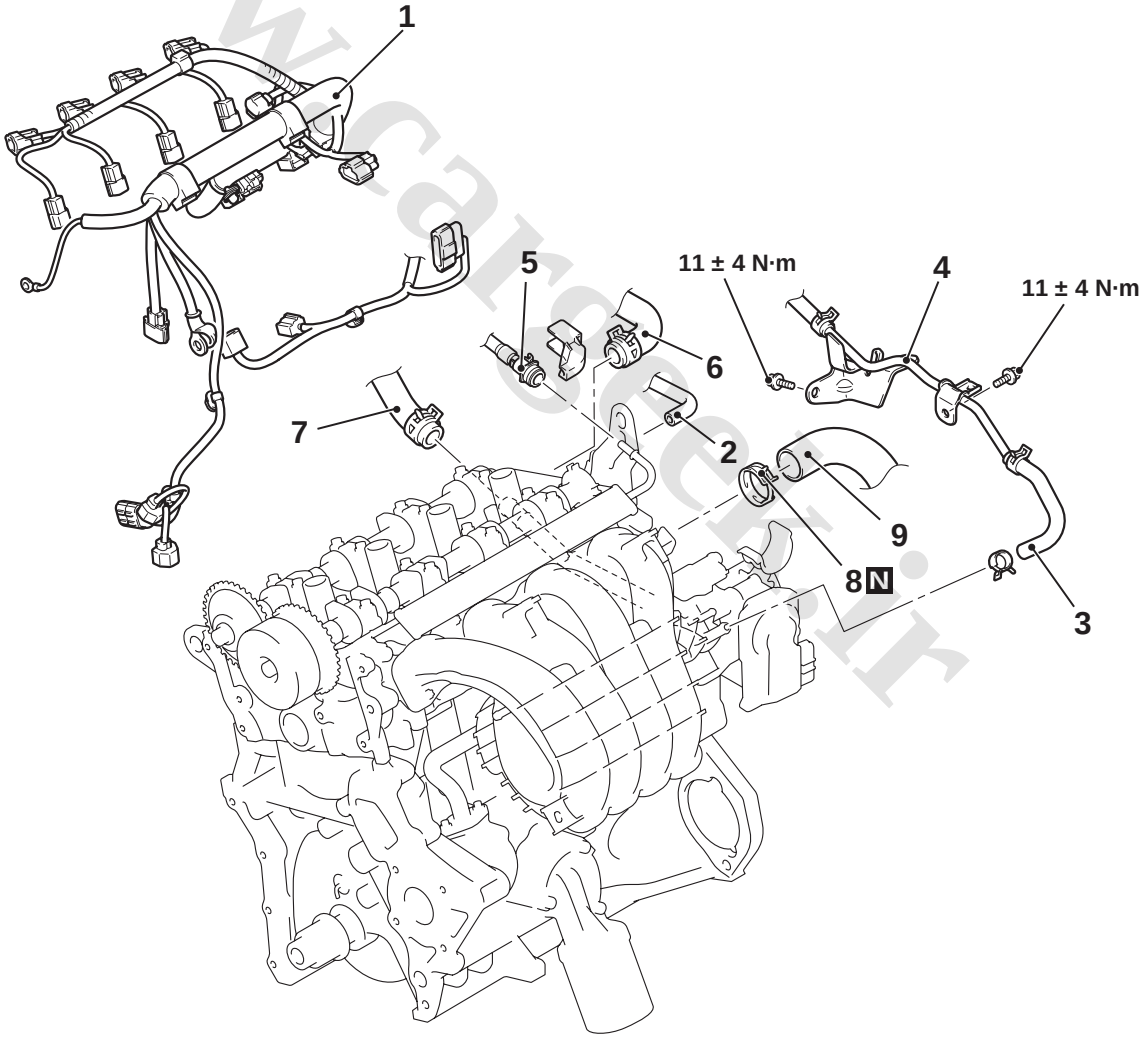

AC701002AC

Removal steps

1. Control wiring harness connection
2. Purge solenoid hose connection

Removal steps (Continued)

3. Brake booster vacuum hose connection

www.cargeek.ir

www.CarGeek.ir

Removal steps (Continued)

4. Brake booster vacuum hose assembly

<<A>> >>E<< 5. Fuel high-pressure hose connection

6. Water hose connection

7. Heater hose connection

<<B>> >>D<< 8. Hose clip

<<B>> >>D<< 9. Radiator upper hose connection

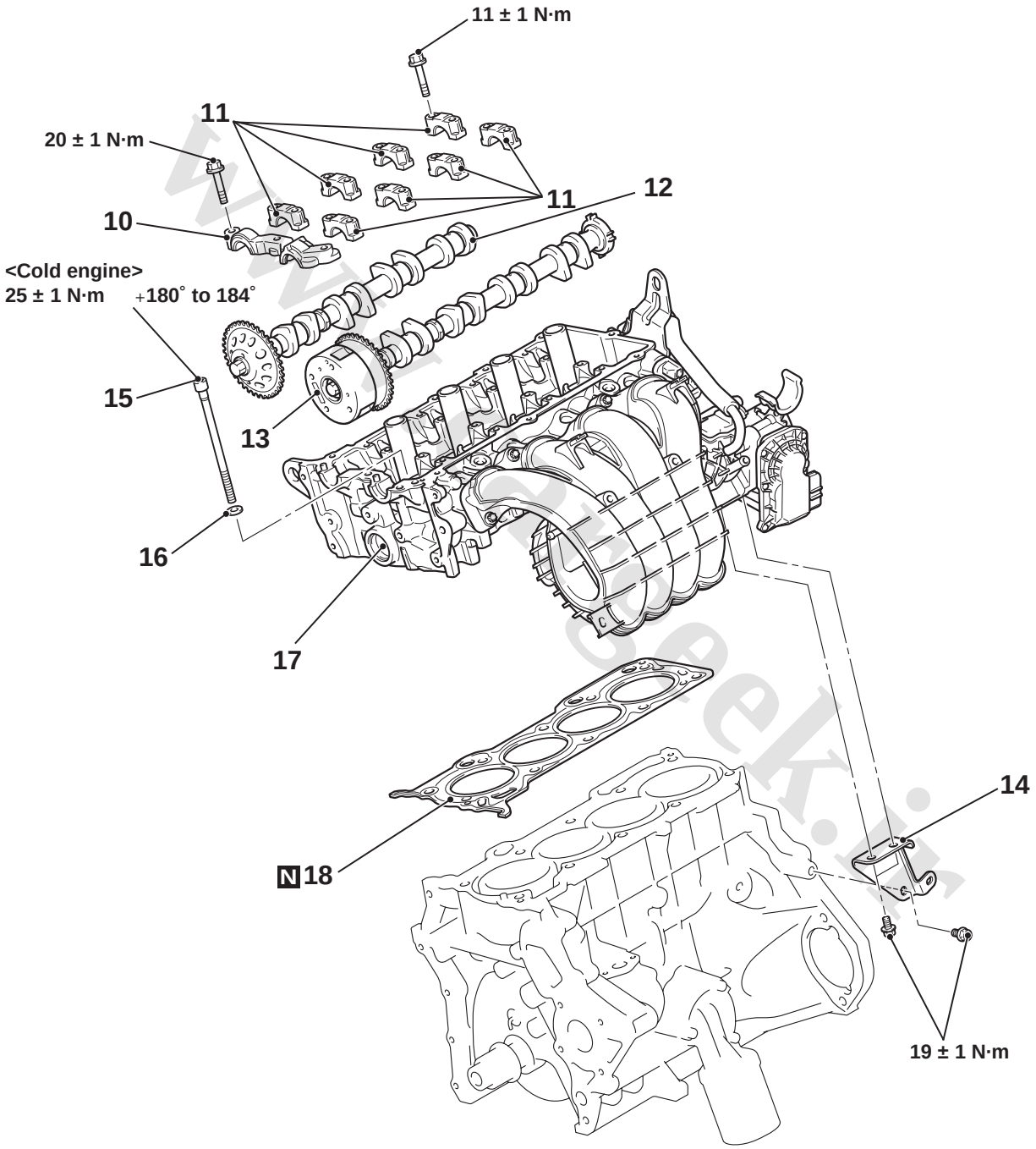

ACA00782AB

Removal steps

<<C>> >>C<< 10. Front camshaft bearing cap

<<C>> >>C<< 11. Camshaft bearing cap

Removal steps (Continued)

12. Camshaft and camshaft sprocket assembly (exhaust side)

www.cargeek.ir

www.CarGeek.ir

Removal steps (Continued)

13. Camshaft and V.V.T. sprocket assembly (Inlet side)
14. Inlet manifold stay

<<D>> >>B<< 15. Cylinder head bolt
16. Cylinder head bolt washer

>>A<< 17. Cylinder head assembly

>>A<< 18. Cylinder head gasket

REMOVAL SERVICE POINTS

<<A>> FUEL HIGH-PRESSURE HOSE DISCONNECTION

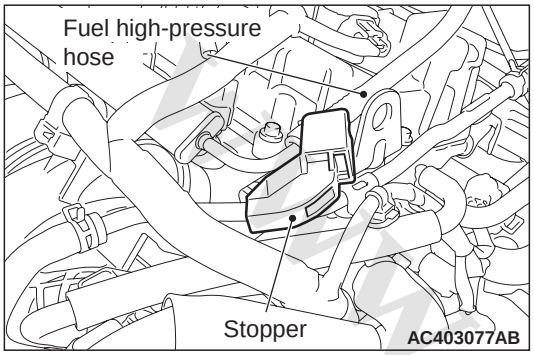

1. Remove the stopper.

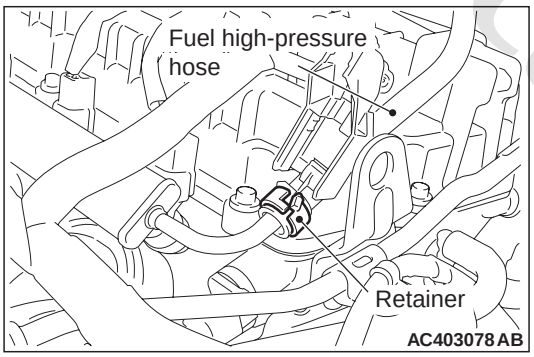

2. Raise the retainer, and pull out the fuel high-pressure hose.

   NOTE: If the retainer comes off, install it securely after pulling out the fuel high-pressure hose.

<<B>> HOSE CLIP/RADIATOR UPPER HOSE DISCONNECTION

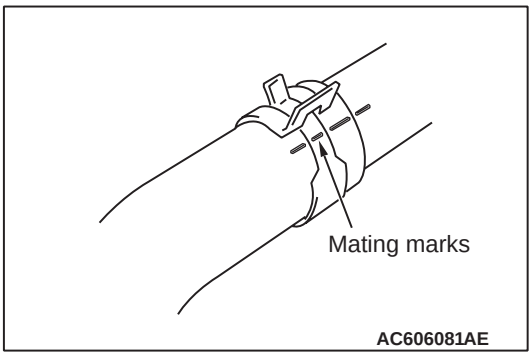

1. Make mating marks on the radiator hose and hose clamp as shown to install them in the original position. Then, remove them.

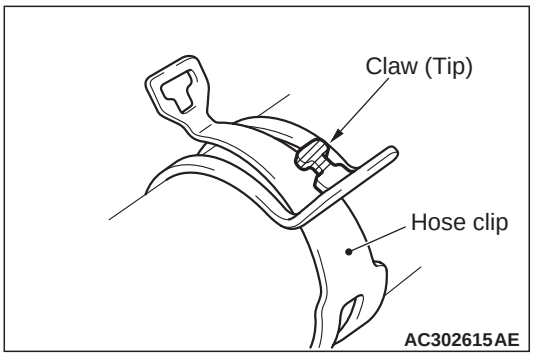

2. Break off the tip of hose clip claw and spread out the hose clip.

   NOTE: If there is a hose clip claw, the hose clip cannot spread to capacity because the claw contacts the hose clip.

3. Disconnect the radiator hose.

<<C>> FRONT CAMSHAFT BEARING CAP/ CAMSHAFT BEARING CAP REMOVAL

1. Install the engine oil pan removed together with the timing chain temporarily to the cylinder block.

⚠ CAUTION

When supporting the engine and transmission assembly with a garage jack, be careful not to deform the engine oil pan.

2. Place a garage jack against the temporarily-installed engine oil pan to support the engine and transmission assembly.

www.cargeek.ir

www.CarGeek.ir

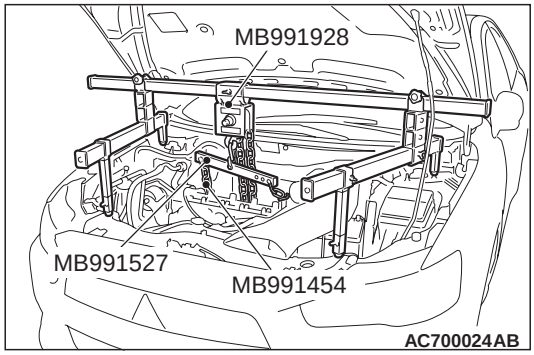

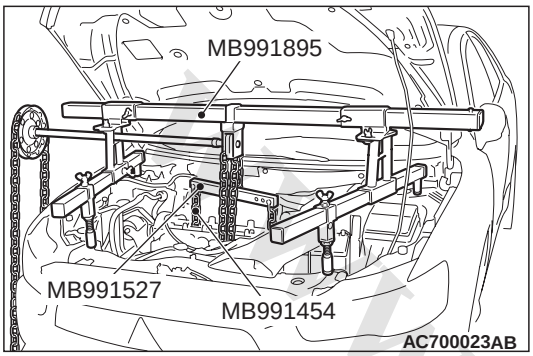

3. Remove special tool engine hanger (MB991928 or MB991895) which was installed for supporting the engine and transmission assembly when the valve timing chain was removed (Refer to).

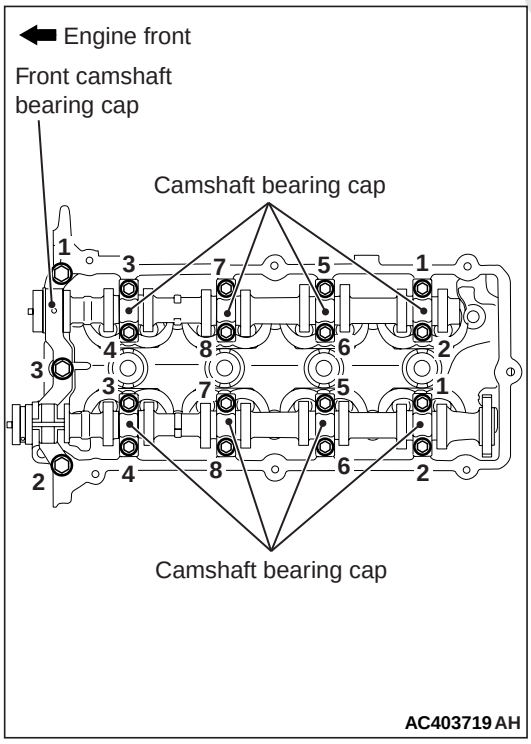

4. Loosen the front camshaft bearing cap mounting bolts in the order shown, and then loosen each camshaft bearing cap mounting bolts as well. Remove the front camshaft bearing cap and each camshaft bearing cap.

<<D>> CYLINDER HEAD BOLT REMOVAL

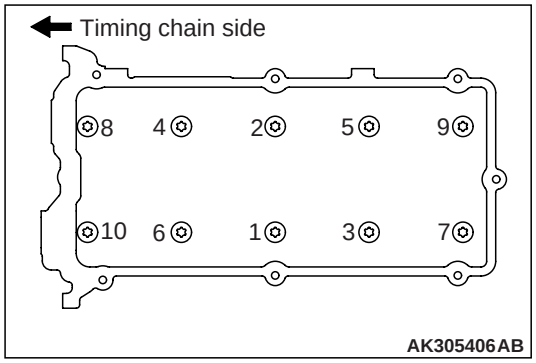

Loosen the cylinder head bolts in two or three steps in the order of the numbers shown in the illustration.

INSTALLATION SERVICE POINTS

>>A<< CYLINDER HEAD GASKET/CYLINDER HEAD ASSEMBLY INSTALLATION

⚠ CAUTION

Do not allow any foreign materials get into the coolant passages, oil passages and cylinder.

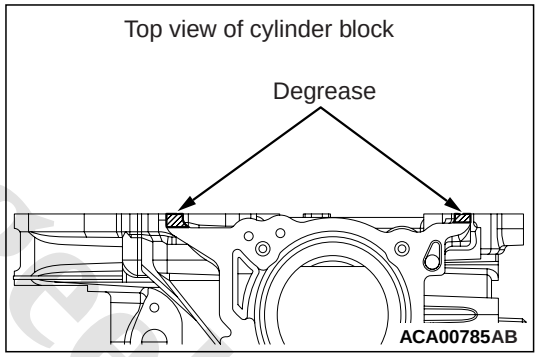

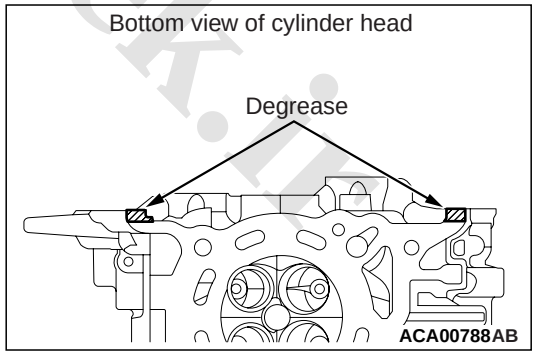

1. Wipe off the sealant and grease on the top surface of the cylinder block and the bottom surface of the cylinder head, and degrease the surface where the sealant is applied.

www.cargeek.ir

www.CarGeek.ir

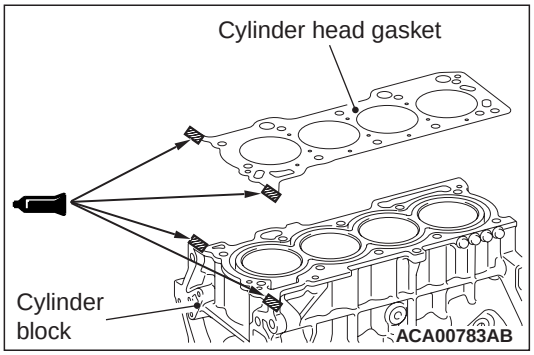

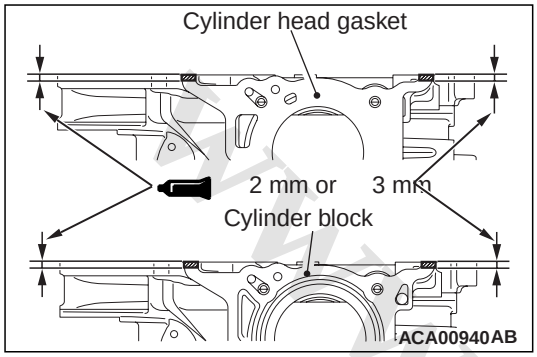

2. Apply the sealant to the top surface of the cylinder block as shown.

   Specified sealant: ThreBond 1217G or equivalent

3. Install the cylinder head gasket to the cylinder block.

   NOTE:
   - *Install the cylinder head gasket immediately after the application of sealant.*
   - *When the cylinder head gasket is installed to the cylinder block, check that the sealant is securely applied to the bead line of the cylinder head gasket.*

4. Apply the sealant to the top surface of the cylinder head gasket as shown.

   Specified sealant: ThreeBond 1217G or equivalent

⚠ CAUTION

After the installation, until a sufficient period of time (one hour or more) elapses, do not apply the engine oil or water to the sealant application area or start the engine.

5. Install the cylinder head assembly.

   NOTE: Install the cylinder head assembly immediately after the application of sealant.

>>B<< CYLINDER HEAD BOLT INSTALLATION

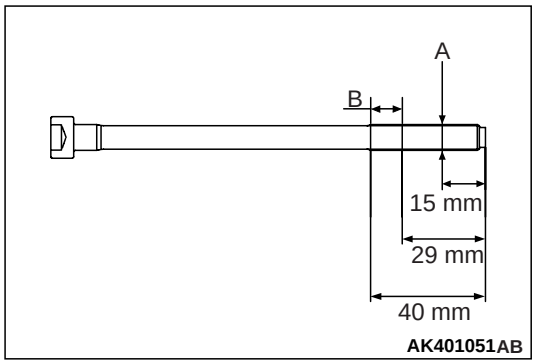

1. Inspect all reused cylinder head bolts according to the following procedure.
   (1) Measure the outside diameter shown in the illustration (arrow "A").
   (2) Measure the smaller outside diameter shown in the illustration (arrow "B").
   (3) When the difference between the outside diameters (arrow "A" and "B") exceeds the standard value, replace the cylinder head bolt.

   Standard value: 0 – 0.15 mm

2. Install the cylinder head bolts and washers onto the cylinder head.

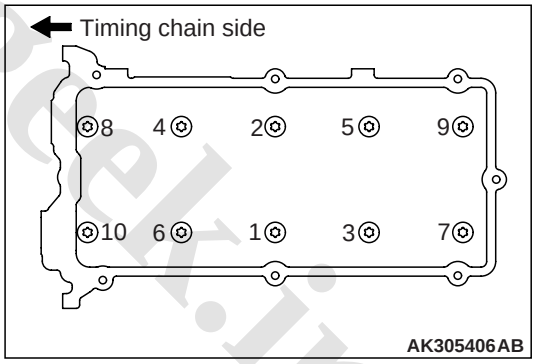

3. Tighten the cylinder head bolts to the specified torque in the order shown in the figure in two or three steps.

   Tightening torque: 25 ± 1 N·m

www.cargeek.ir

www.CarGeek.ir

⚠ CAUTION

- **When the tightening angle is smaller than the specified tightening angle, the appropriate tightening capacity cannot be secured.**
- **When the tightening angle is larger than the specified tightening angle, remove the bolt to start from the beginning again according to the procedure.**

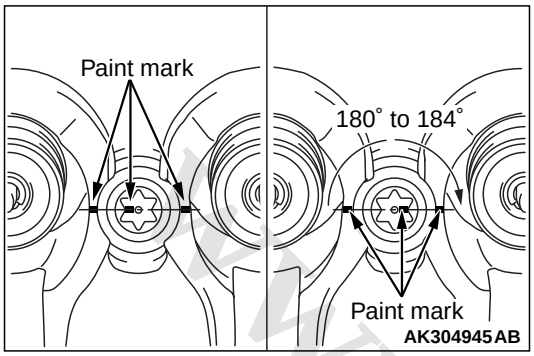

4. Put a paint mark on the cylinder head bolt head and cylinder head, tighten to 180° to184° in the order shown in the figure, and check that the paint mark on the cylinder head bolt head aligns with the paint mark on the cylinder head.

>>C<< CAMSHAFT BEARING CAP/FRONT CAMSHAFT BEARING CAP INSTALLATION

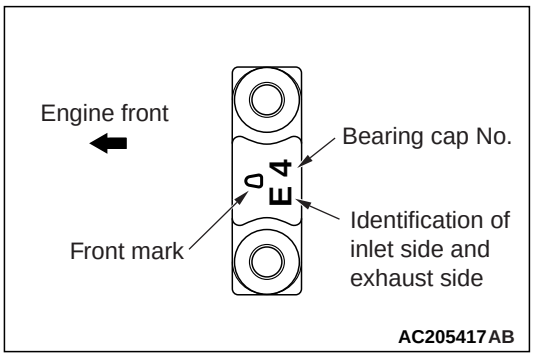

1. The No.2 to No.5 bearing caps are equally shaped for both the inlet and exhaust camshafts. Be sure to correctly install them by referring to the identification marks.

   Identification mark (stamped on the front and No.2 to No.5 bearing caps)
   I: Inlet
   E: Exhaust

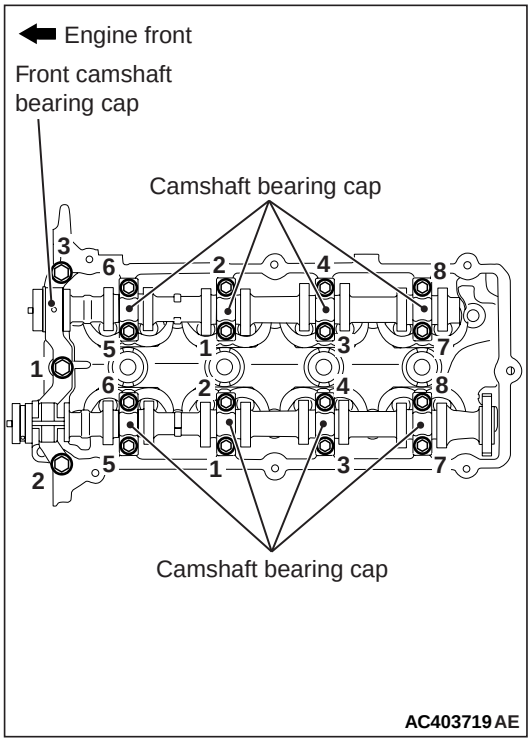

2. Tighten each camshaft bearing cap mounting bolts to the specified torque in the order shown, and then tighten the front camshaft bearing cap mounting bolts as well.

   Tightening torque:
   11 ± 1 N·m (Camshaft bearing cap mounting bolts)
   20 ± 1 N·m (Front camshaft bearing cap mounting bolts)

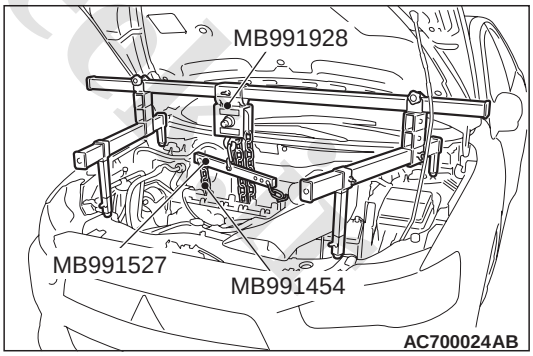

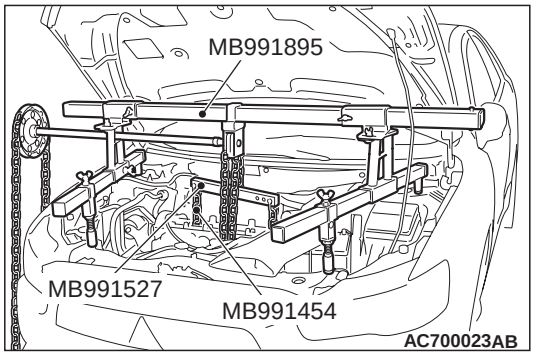

www.cargeek.ir

www.CarGeek.ir

3. Install special tool engine hanger (MB991928 or MB991895) which was installed for supporting the engine and transmission assembly when the valve timing chain was removed (Refer to).
4. Remove the garage jack which supports the engine and transmission assembly.
5. Remove the engine oil pan installed temporarily.

>>D<< RADIATOR UPPER HOSE/HOSE CLIP INSTALLATION

⚠ CAUTION

Never reuse the hose clip whose claw is broken off to prevent the rusting.

1. Make mating mark on a new hose clip in the same position as the remove one.

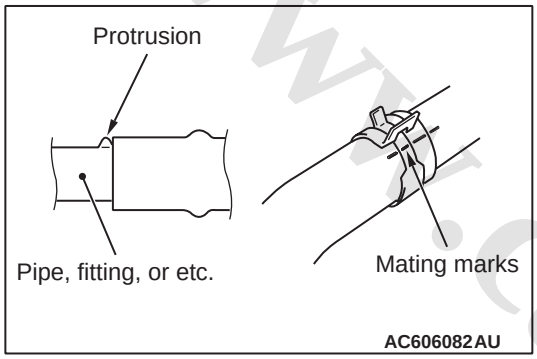

2. Insert the radiator hose until the protrusion of the pipe.
3. Align the mating marks on the radiator hose and hose clip.
4. Remove the hose clip claw and shorten the hose clip, then install the radiator hose.

>>E<< FUEL HIGH-PRESSURE HOSE CONNECTION

⚠ CAUTION

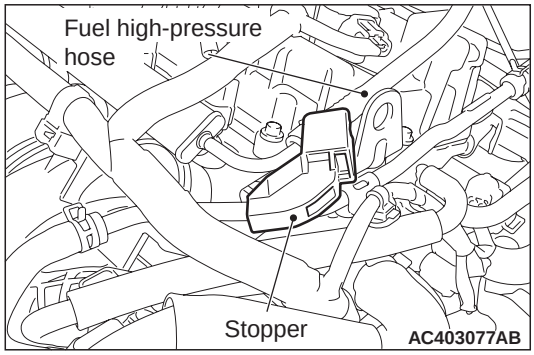

After connecting the fuel high-pressure hose, slightly pull it in the pull-out direction to check that it is installed firmly. In addition, check that there is approximately 1 mm play. After the check, install the stopper securely.

www.cargeek.ir

www.CarGeek.ir

TIMING CHAIN

REMOVAL AND INSTALLATION

M1112007201725

Pre-removal operation	Post-installation operation
• Engine Room Under Cover Front B and Engine Room Side Cover (RH) Removal (Refer to GROUP 51 – Under Cover). • Engine Coolant Draining (Refer to GROUP 14 – On-vehicle Service, Engine Coolant Replacement). • Engine Oil Draining (Refer to GROUP 12 – On-vehicle Service, Engine Oil Replacement). • Cylinder Head Cover Assembly Removal (Refer to). • Crankshaft Damper Pulley Removal (Refer to). • Engine Oil Pan Removal (Refer to). • Water Pump Pulley Removal (Refer to GROUP 14 – Water Pump).	• Water Pump Pulley Installation (Refer to GROUP 14 – Water Pump). • Engine Oil Pan Installation (Refer to). • Crankshaft Damper Pulley Installation (Refer to). • Cylinder Head Cover Assembly Installation (Refer to). • Drive Belt Tension Check and Adjustment (Refer to). • Engine Oil Refilling (Refer to GROUP 12 – On-vehicle Service, Engine Oil Replacement). • Engine Coolant Refilling (Refer to GROUP 14 – On-vehicle Service, Engine Coolant Replacement). • Engine Room Under Cover Front B and Engine Room Side Cover (RH) Installation (Refer to GROUP 51 – Under Cover).

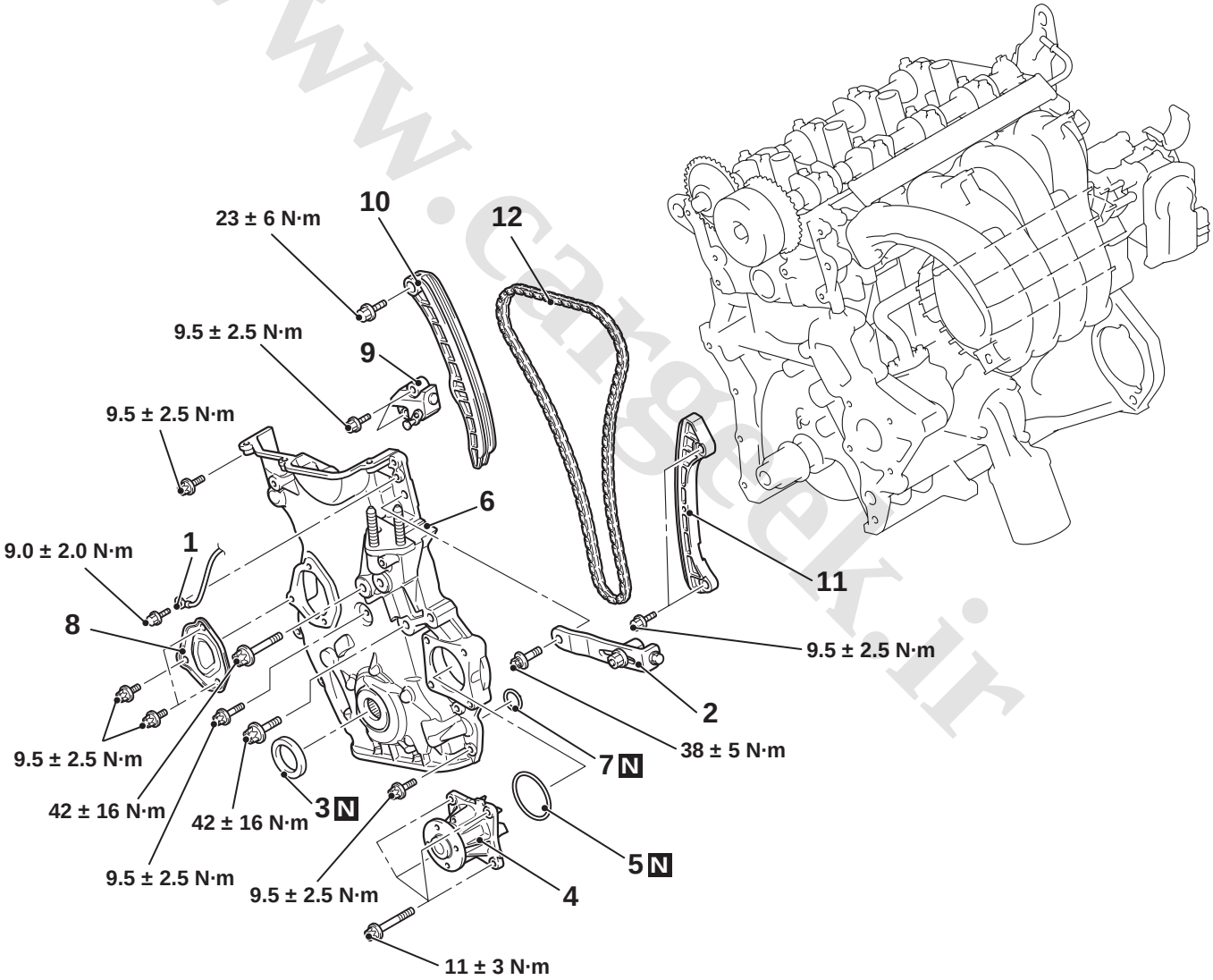

ACA00817AB

www.cargeek.ir

www.CarGeek.ir

Removal steps

1. Earth cable connection
<<A>> • A/C compressor and clutch assembly.
<<B>> • Engine and transmission assembly supporting
• Engine mounting bracket (Refer to GROUP 32 – Engine Mounting)
2. Alternator brace
>>E<< 3. Crankshaft front oil seal
>>D<< 4. Water pump assembly
>>D<< 5. O-ring
>>C<< 6. Timing chain case assembly
>>C<< 7. O-ring
>>B<< 8. Timing chain tensioner cover
<<C>> >>A<< 9. Timing chain tensioner
>>A<< 10. Tensioner lever assembly
>>A<< 11. Timing chain guide
>>A<< 12. Timing chain

REMOVAL SERVICE POINTS

<<A>> A/C COMPRESSOR AND CLUTCH ASSEMBLY REMOVAL

1. Remove the A/C compressor and clutch assembly together with the hose from the bracket.
2. Tie the removed A/C compressor and clutch assembly with a string at a position where it will not interfere with the removal and installation of timing chain case assembly.

<<B>> ENGINE AND TRANSMISSION ASSEMBLY HOLDING

Install a special tool for holding the engine and transmission assembly.

1. <When special tool engine hanger (MB991928) is used>
   (1) Assemble special tool engine hanger (MB991928) (Set the following parts on the base hanger).
   - Slide bracket (HI)
   - Foot x 4 (standard) (MB991932)
   - Joint x 2 (90) (MB991930)

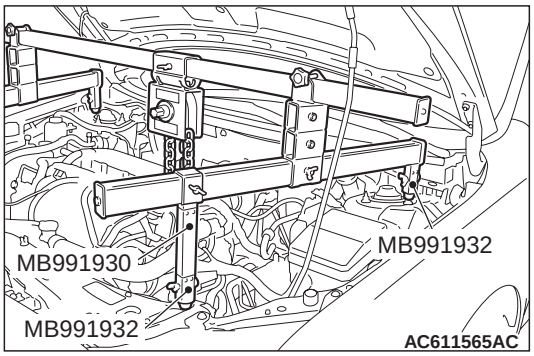

   (2) Set the foot of the special tool as shown in the figure.

   NOTE: Slide the slide bracket (HI) to adjust the engine hanger balance.

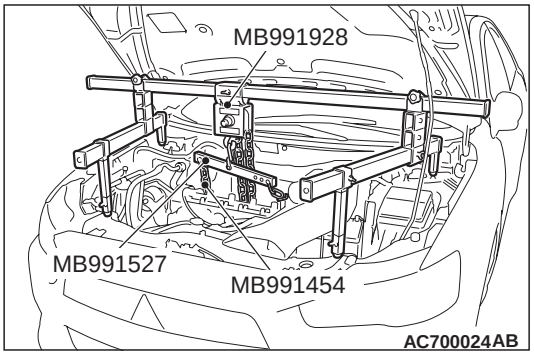

   (3) Install special tool engine hanger (MB991527) and special tool engine hanger balancer (MB991454) to the engine hanger, and set it to special tool MB991928 to support the engine and transmission assembly.

2. <When special tool engine hanger (MB991895) is used>

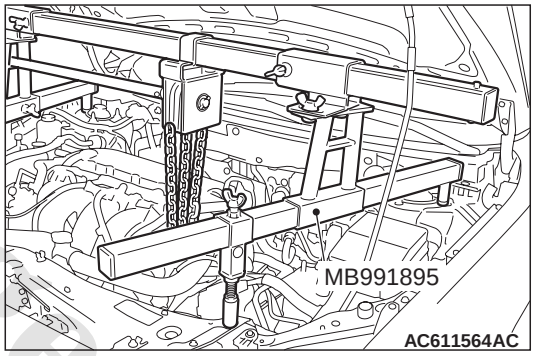

   (1) Set the foot of special tool engine hanger (MB991895) as shown in the figure.

   NOTE: Slide the foot to adjust the engine hanger balance.

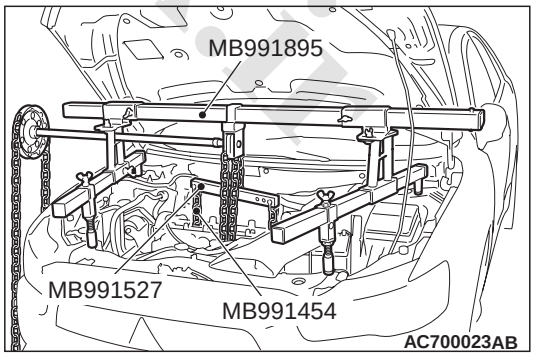

   (2) Install special tool engine hanger (MB991527) and special tool engine hanger balancer (MB991454) to the engine hanger, and set it to special tool MB991895 to support the engine and transmission assembly.

www.cargeek.ir

www.CarGeek.ir

<<C>> TIMING CHAIN TENSIONER REMOVAL

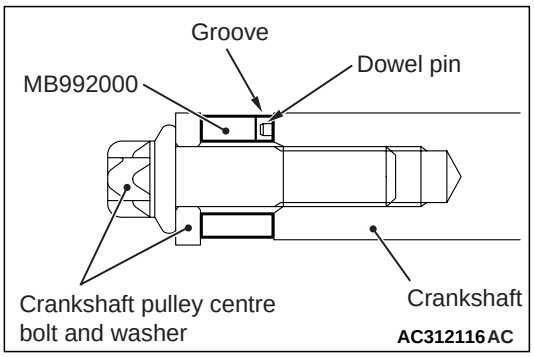

1. Set special tool crankshaft adapter (MB992000) to the crankshaft, and install the crankshaft pulley centre bolt and washer.

⚠ CAUTION

Never turn the crankshaft anti-clockwise.

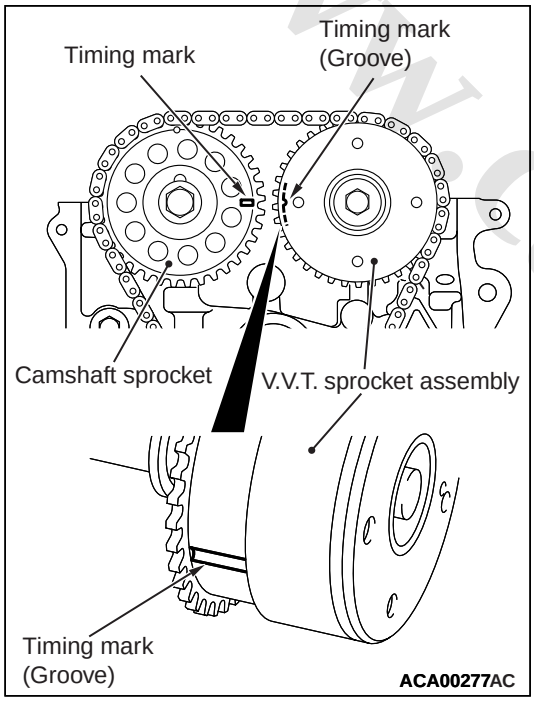

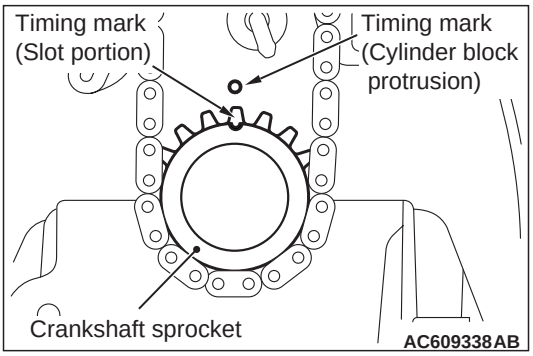

2. Turn the crankshaft clockwise, and align the timing mark of the camshaft sprocket and that of the V.V.T. sprocket assembly (the groove of V.V.T. sprocket assembly side face). Then set No.1 cylinder to the TDC.

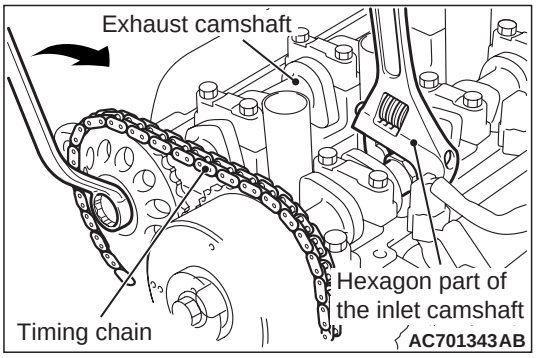

3. While holding the inlet camshaft hexagonal area with a wrench or a similar tool, slightly turn the exhaust camshaft clockwise to tighten the timing chain at the timing chain tensioner side and shorten the plunger of the timing chain tensioner.

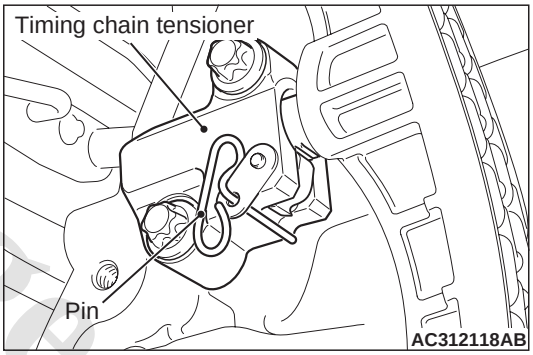

4. With the plunger of the tensioner shortened, insert a pin (3 mm or less in diameter) or a similar tool to the hole shown in the illustration of the timing chain tensioner.

⚠ CAUTION

Do not turn the crankshaft after removing the timing chain tensioner.

5. Remove the timing chain tensioner.

www.cargeek.ir

www.CarGeek.ir

INSTALLATION SERVICE POINTS

>>A<< TIMING CHAIN/TIMING CHAIN GUIDE/ TENSIONER LEVER ASSEMBLY/TIMING CHAIN TENSIONER INSTALLATION

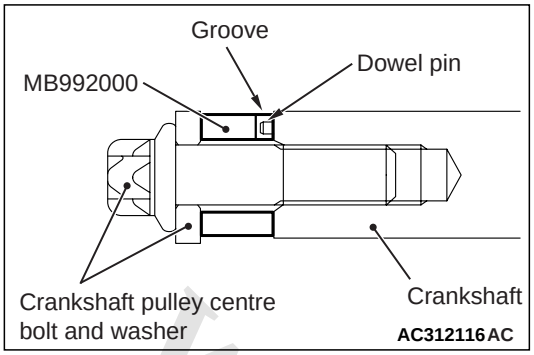

1. Set special tool crankshaft adapter (MB992000) to the crankshaft, and install the crankshaft pulley centre bolt and washer.

⚠ CAUTION

Never turn the crankshaft anti-clockwise.

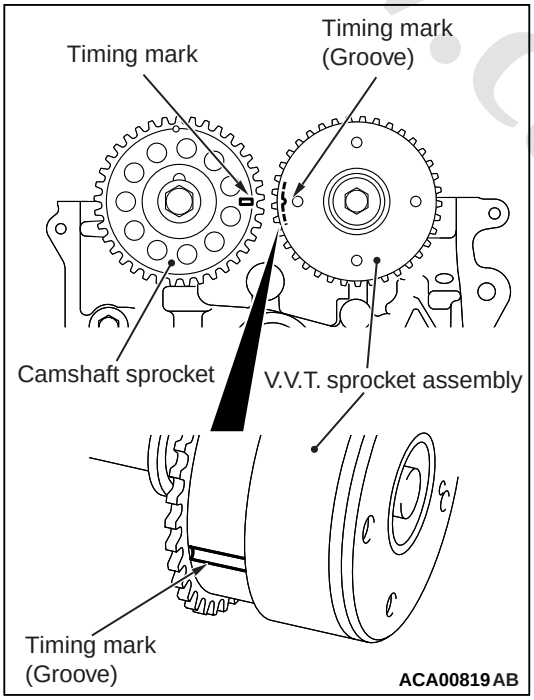

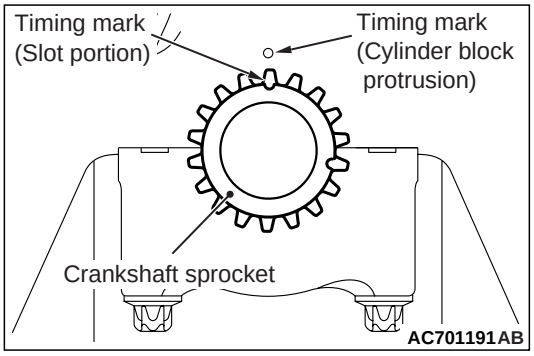

2. Turn the camshaft and crankshaft clockwise, and align the timing marks of the camshaft sprocket, the V.V.T. sprocket assembly (the groove of V.V.T. sprocket assembly side face) and the crankshaft sprocket. Then set No.1 cylinder to the top dead centre of compression.

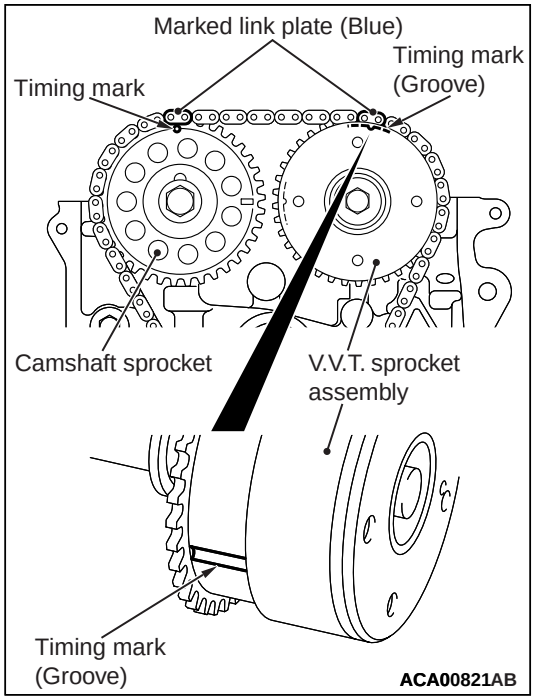

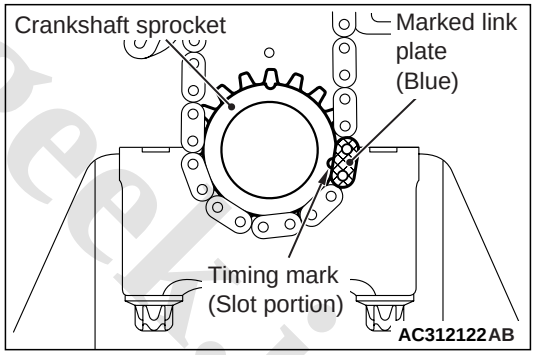

3. Locate the marked link plate (blue-coloured area) of the timing chain as shown in the illustration of each sprocket, and install the timing chain.

www.cargeek.ir

www.CarGeek.ir

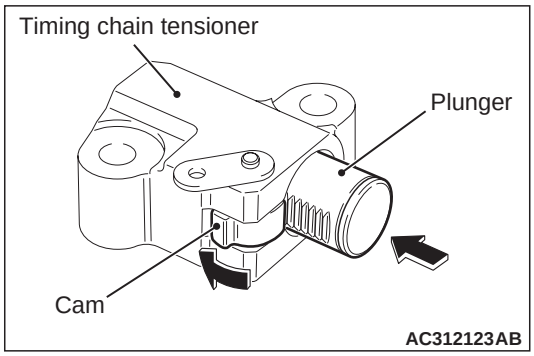

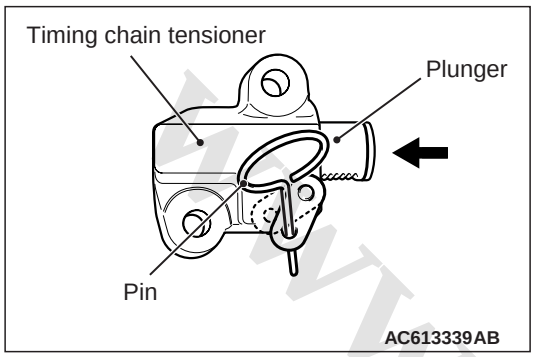

4. Install the timing chain guide, the tensioner lever assembly, and the timing chain tensioner.

   NOTE: When the plunger of the timing chain tensioner is stretched, remove the pin or the similar tool. While pressing the cam in the lower area of the timing chain tensioner, press and shorten the plunger to keep the status with the pin or the similar tool.
5. After installing the timing chain tensioner, confirm that the timing marks of each sprocket are aligned with the cylinder No. 1 to the top dead centre of compression, and the marked link plate (blue-coloured area) of the timing chain is aligned with the specified position of each sprocket. Then pull out the pin or a similar tool of the timing chain tensioner, and apply tension to the timing chain.
6. Remove special tool MB992000.

>>B<< TIMING CHAIN TENSIONER COVER INSTALLATION

1. Remove the sealant from the installation face of the timing chain tensioner cover and the timing chain case assembly, and degrease the surface where the sealant is applied.

⚠ CAUTION

After the installation, until a sufficient period of time (one hour or more) elapses, do not apply the engine oil or water to the sealant application area or start the engine.

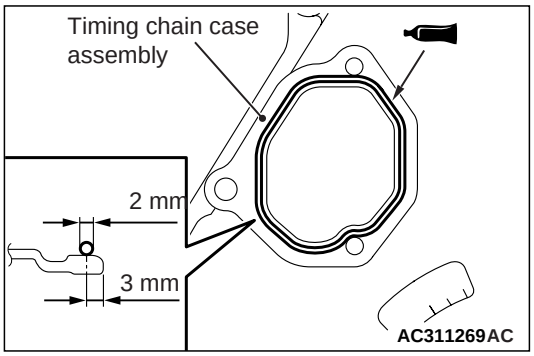

2. Apply a bead of the specified sealant to the mating surface of the timing chain case assembly. Then, install the timing chain tensioner cover to the timing chain case assembly.

   Specified sealant: ThreBond 1217G or equivalent

   NOTE: Install the timing chain tensioner cover immediately after applying sealant.

>>C<< O-RING/TIMING CHAIN CASE ASSEMBLY INSTALLATION

1. Remove the sealant from the timing chain case assembly and the installation face of the timing chain case assembly on the cylinder block and the cylinder head, and degrease the surface where the sealant is applied.

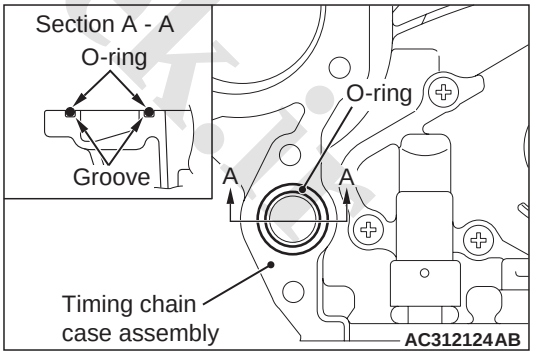

2. Securely fit the O-ring in the groove of timing chain case assembly without causing any torsion and damage.

www.cargeek.ir

www.CarGeek.ir

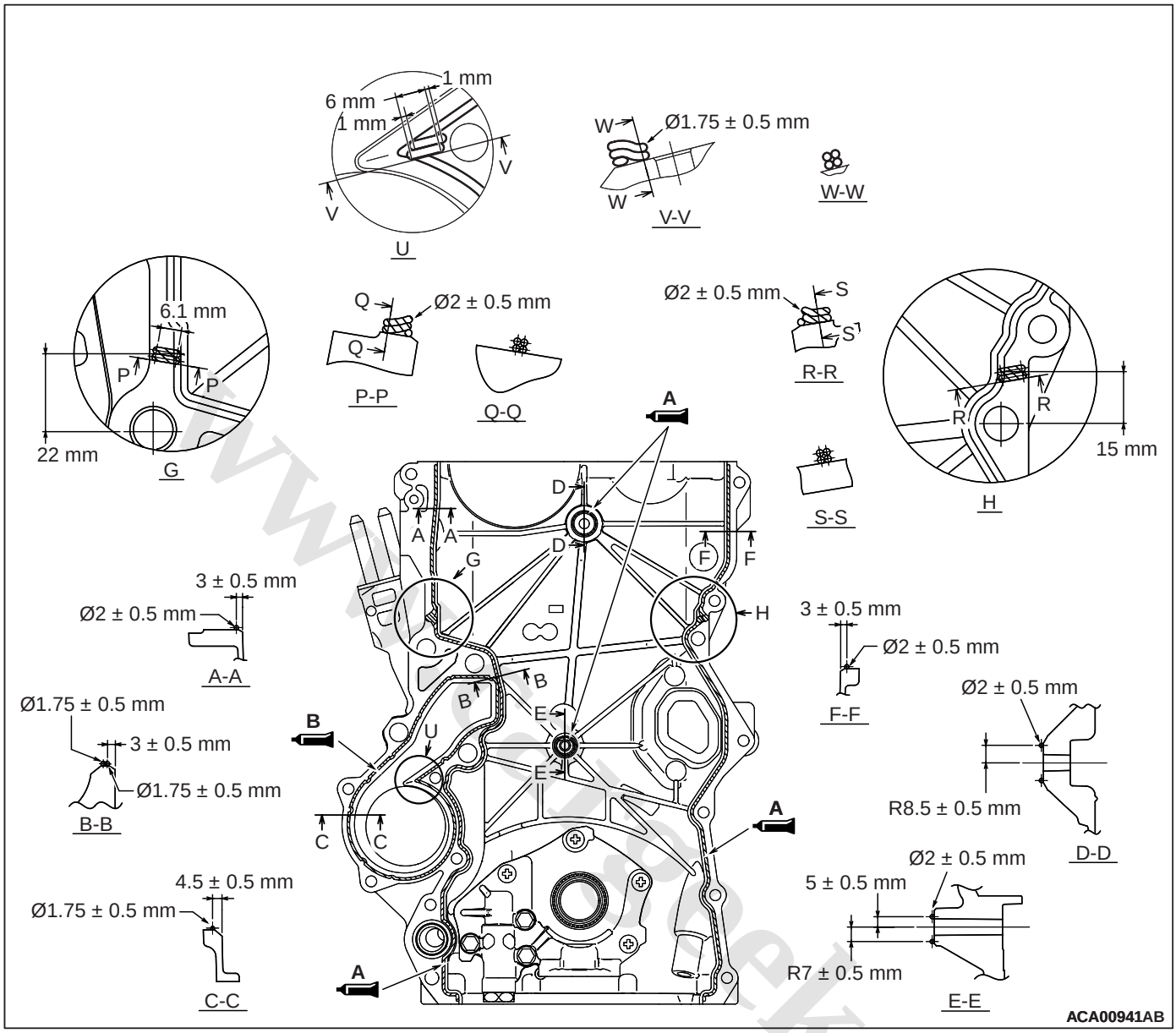

3. Apply a bead of the sealant to the cylinder block and cylinder head mating surface of the timing chain case assembly as shown.

   Specified sealant:
   A: ThreBond 1217G or equivalent
   B: ThreBond 1217D or equivalent

   NOTE: Install the timing chain case assembly immediately after applying sealant.

⚠ CAUTION

- **If the sealant contacts any other part during installation of the timing chain case assembly, apply sealant again before installing the timing chain case assembly.**
- **After the installation, until a sufficient period of time (one hour or more) elapses, do not apply the engine oil or water to the sealant application area or start the engine.**

4. Taking care not to scrub the specified sealant applied on the timing chain case assembly with the cylinder block etc., install the timing chain case assembly to the cylinder block.

www.cargeek.ir

www.CarGeek.ir

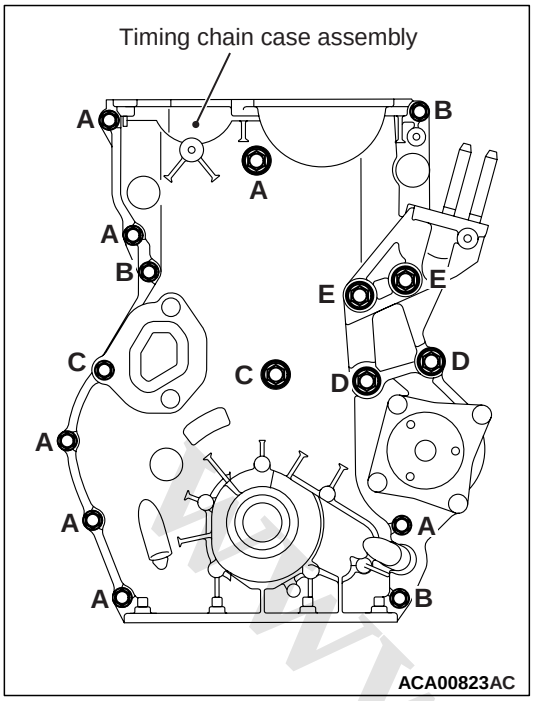

5. Install the timing chain case assembly mounting bolts to the position shown, and tighten the bolts to the specified torque.

Bolt (symbol)	Diameter × length mm	Tightening torque N·m
A	6 × 25	9.5 ± 2.5
B	6 × 30	9.5 ± 2.5
C	6 × 45	9.5 ± 2.5
D	10 × 50	42 ± 16
E	10 × 90	42 ± 16

>>D<< O-RING/WATER PUMP ASSEMBLY INSTALLATION

1. Carefully remove the drying material and other foreign materials on the installation groove for the water pump O-ring.
2. Carefully remove the drying material and other foreign materials on the water pump installation area of the timing chain case assembly.
3. Sufficiently apply water or coolant to the O-ring to prevent it from dropping using brushes.

⚠ CAUTION

When installing the crankshaft front oil seal, be careful to avoid damage to the crankshaft front oil seal.

3. Using special tool differential oil seal installer

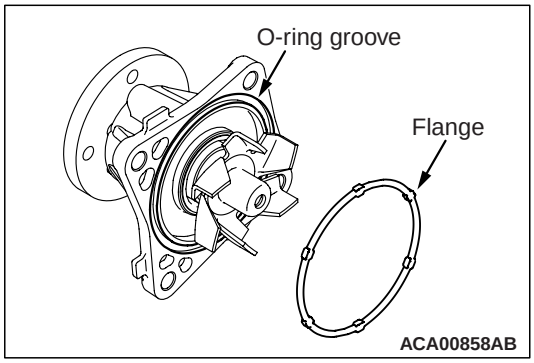

4. Securely fit the O-ring flange area into the installation groove of the water pump O-ring.
5. Reverse the water pump carefully and check that the O-ring does not fall down.

⚠ CAUTION

When installing the water pump, pay attention not to let the O-ring fall down or be bitten. Otherwise, a coolant leak may be caused.

6. Install the water pump to the timing chain case assembly.

   NOTE: The water pump assembly mounting bolts are also used for the timing chain case assembly. Thus install the water pump assembly together with the timing chain case assembly, or else immediately after installing the timing chain case assembly.

>>E<< CRANKSHAFT FRONT OIL SEAL INSTALLATION

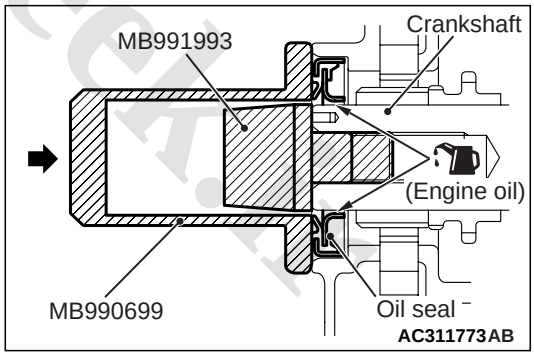

1. Apply a small amount of engine oil to the outer circumference of special tool crankshaft front oil seal guide (MB991993) and install it to the crankshaft.
2. Apply a small amount of engine oil to the entire inner circumference of the oil seal lip.

   (MB990699), drive the oil seal so that it is flush with the timing chain case assembly.

www.cargeek.ir

www.CarGeek.ir

ENGINE ASSEMBLY

REMOVAL AND INSTALLATION

M1112001006869

⚠ CAUTION

- **When the engine assembly replacement is performed, use the M.U.T.-III to initialise the learning value (Refer to GROUP 00 – Precautions Before Service, Initialisation Procedure for Learning Value in MPI Engine).**

Pre-removal operation	Post-installation operation
• Hood Removal (Refer to GROUP 42A – Hood). • Fuel Line Pressure Reduction (Refer to GROUP 13A – On-vehicle Service, How to Reduce Pressurized Fuel Lines). • Engine Room Under Cover Front B and Engine Room Side Cover Removal (Refer to GROUP 51 – Under Cover). • Engine Coolant Draining (Refer to GROUP 14 – On-vehicle Service, Engine Coolant Replacement). • Engine Oil Draining (Refer to GROUP 12 – On-vehicle Service, Engine Oil Replacement). • Transmission Oil Draining (Refer to GROUP 22A – On-vehicle Service, Transmission Oil Change) <M/T>. • Automatic Transmission Fluid Draining (Refer to GROUP 23C – On-vehicle Service, Automatic Transmission Fluid Change) <A/T>. • Engine Cover Removal (Refer to). • Air Cleaner Intake Hose and Air Cleaner Assembly Removal (Refer to GROUP 15 – Air Cleaner). • Battery and Battery Tray Removal (Refer to GROUP 54A – Battery). • Engine-ECU Removal (Refer to GROUP 13A – Engine-ECU). • Radiator Removal (Refer to GROUP 14 – Radiator). • Drive Belt Removal (Refer to). • Alternator and Alternator Brace Removal (Refer to GROUP 16 – Charging System, Alternator Assembly).	• Alternator and Alternator Brace Installation (Refer to GROUP 16 – Charging System, Alternator Assembly). • Drive Belt Installation (Refer to). • Radiator Installation (Refer to GROUP 14 – Radiator). • Engine-ECU Installation (Refer to GROUP 13A – Engine-ECU). • Battery and Battery Tray Installation (Refer to GROUP 54A – Battery). • Air Cleaner Intake Hose and Air Cleaner Assembly Installation (Refer to GROUP 15 – Air Cleaner). • Transmission Oil Refilling (Refer to GROUP 22A – On-vehicle Service, Transmission Oil Change) <M/T>. • Automatic Transmission Fluid Refilling (Refer to GROUP 23C – On-vehicle Service, Automatic Transmission Fluid Change) <A/T>. • Engine Oil Refilling (Refer to GROUP 12 – On-vehicle Service, Engine Oil Replacement). • Engine Coolant Refilling (Refer to GROUP 14 – On-vehicle Service, Engine Coolant Replacement). • Drive Belt Tension Check (Refer to). • Engine Cover Installation (Refer to). • Engine Room Under Cover Front B and Engine Room Side Cover Installation (Refer to GROUP 51 – Under Cover). • Fuel Leak Check • Hood Installation (Refer to GROUP 42A – Hood).

www.cargeek.ir

www.CarGeek.ir

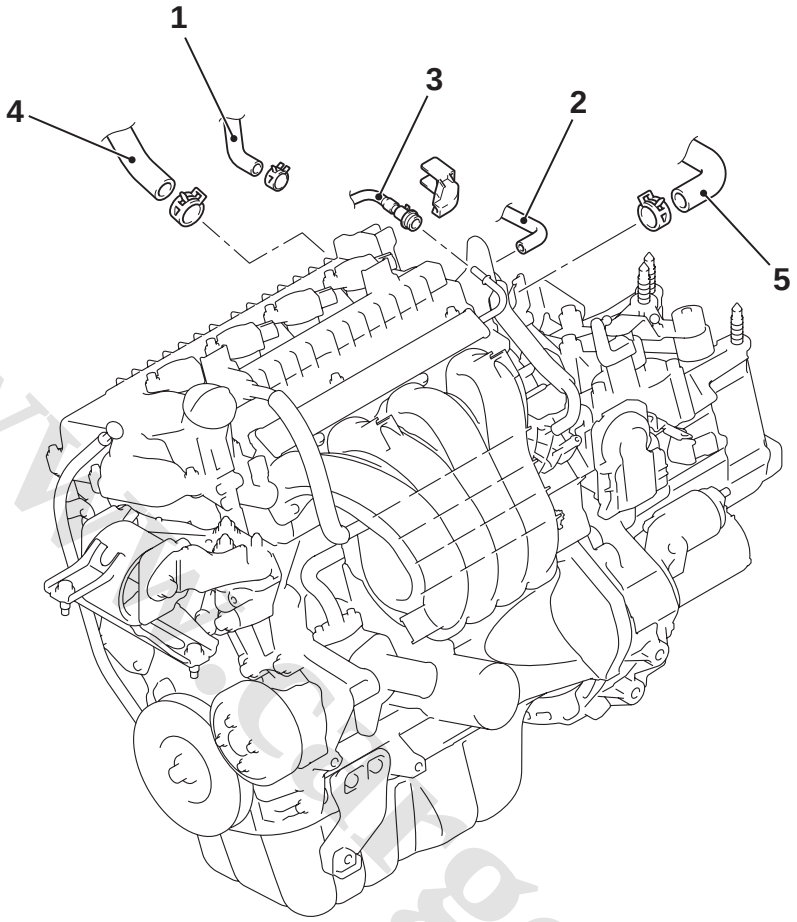

AC700100AB

Removal steps

1. Brake booster vacuum hose connection
2. Purge solenoid hose connection

<<A>> >>C<<

Removal steps (Continued)

3. Fuel high-pressure hose connection
4. Heater hose connection
5. Water hose connection

www.cargeek.ir

www.CarGeek.ir

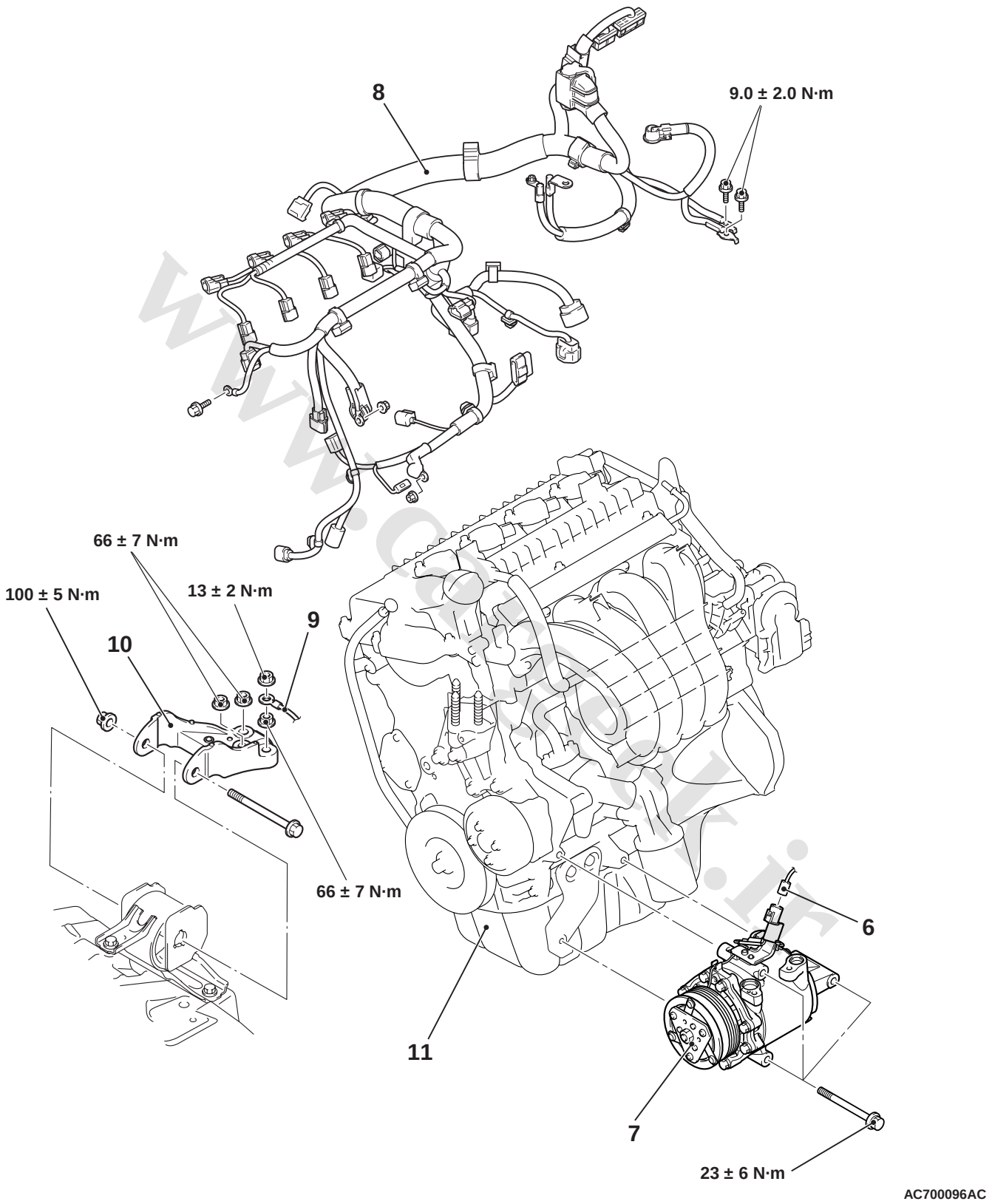

www.cargeek.ir

www.CarGeek.ir

Removal steps

6. A/C compressor and clutch assembly connector

<<B>> 7. A/C compressor and clutch assembly

8. Control wiring harness connection

<<C>> • Transmission assembly (Refer to GROUP 22A – Transmission Assembly) <M/T>

<<C>> • Transmission assembly (Refer to GROUP 23C – Transmission Assembly) <A/T>

• Exhaust manifold (Refer to GROUP 15 – Exhaust manifold).

9. Earth combination

<<D>> >>B<< 10. Engine mounting bracket

<<E>> >>A<< 11. Engine assembly

REMOVAL SERVICE POINTS

<<A>> FUEL HIGH-PRESSURE HOSE DISCONNECTION

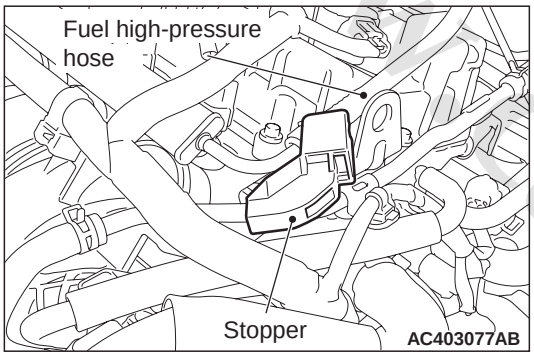

1. Remove the stopper.

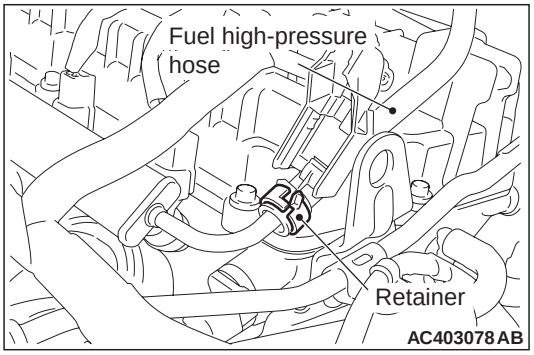

2. Raise the retainer, and pull out the fuel high-pressure hose.

   NOTE: If the retainer comes off, install it securely after pulling out the fuel high-pressure hose.

<<B>> A/C COMPRESSOR AND CLUTCH ASSEMBLY REMOVAL

1. With the hose installed, remove the A/C compressor and clutch assembly from the bracket.
2. Secure the removed A/C compressor and clutch assembly with cord or rope at a position where they will not interfere with the removal of the engine assembly.

<<C>> TRANSMISSION ASSEMBLY REMOVAL

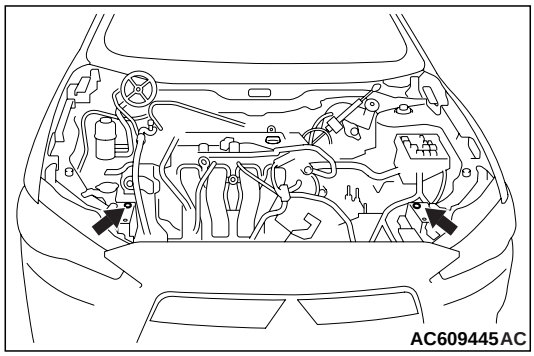

1. Install the headlamp support panel upper bolt to the position as shown in the figure.
2. Remove the transmission assembly (Refer to GROUP 22A – Transmission Assembly) <M/T> or (Refer to GROUP 23C – Transmission Assembly) <A/T>.

<<D>> ENGINE MOUNTING BRACKET REMOVAL

⚠ CAUTION

When supporting the engine assembly with a garage jack, be careful not to deform the engine oil pan.

1. Place a garage jack against the engine oil pan with a piece of wood in between to support the engine assembly.

www.cargeek.ir

www.CarGeek.ir

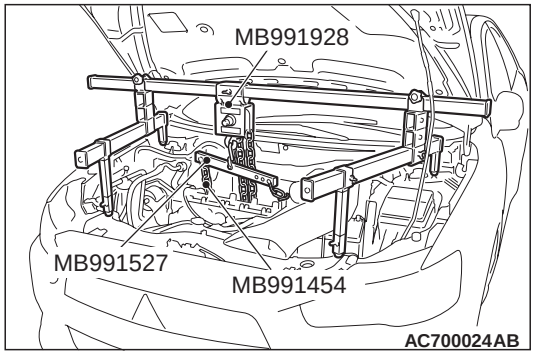

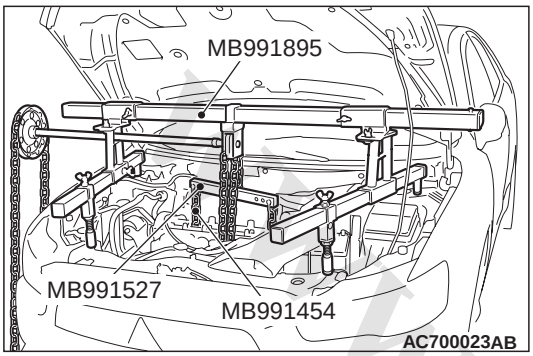

2. Remove special tools engine hanger (MB991928 or MB991895) and engine hanger plate (MB992201) which was installed for supporting the engine assembly when the transmission assembly was removed.
3. Operate a garage jack so that the engine weight is not applied to the engine mounting insulator, and remove the engine mounting bracket.

<<E>> ENGINE ASSEMBLY REMOVAL

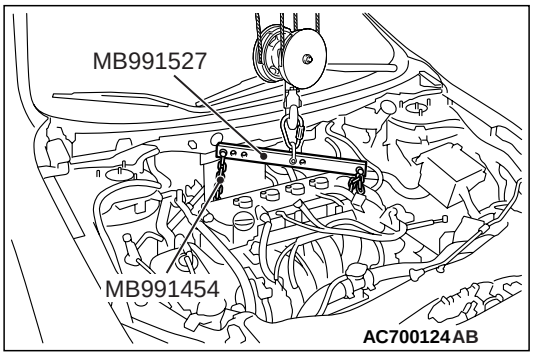

1. Install the chain of special tool engine hanger balancer (MB991454) and special tool engine hanger (MB991527), and set the chain block.
2. After checking that all cables, hoses and wiring harness connectors and so on are disconnected from the engine, lift the engine assembly slowly with the chain block to remove the engine assembly upward from the engine compartment.

INSTALLATION SERVICE POINTS

>>A<< ENGINE ASSEMBLY INSTALLATION

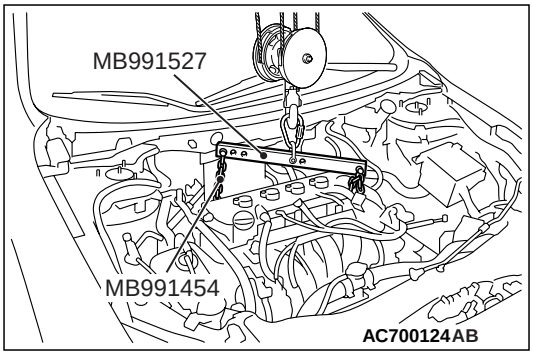

Install the engine assembly, being careful not to pinch the cables, hoses, or wiring harness connectors.

>>B<< ENGINE MOUNTING BRACKET INSTALLATION

⚠ CAUTION

When supporting the engine assembly with a garage jack, be careful not to deform the engine oil pan.

1. Place a garage jack against the engine oil pan with a piece of wood in between, and install the engine mounting bracket while adjusting the position of the engine.

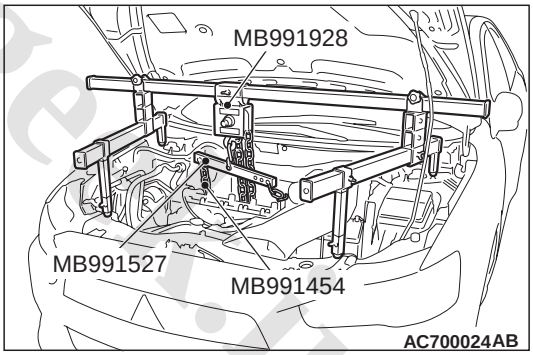

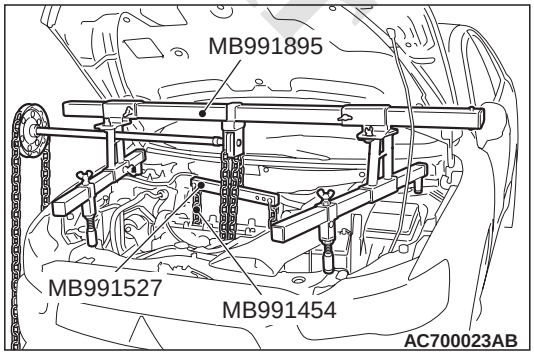

www.cargeek.ir

www.CarGeek.ir

2. Install special tool engine hanger (MB991928 or MB991895) which is used during installation of transmission assembly to hold the engine assembly (Refer to GROUP 22A – Transmission Assembly) <M/T> or (Refer to GROUP 23C – Transmission Assembly) <A/T>.

>>C<< FUEL HIGH-PRESSURE HOSE CONNECTION

⚠ CAUTION

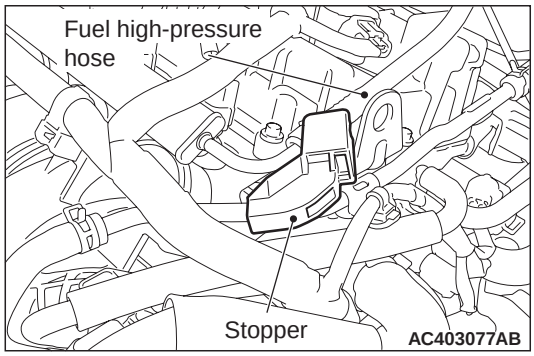

After connecting the fuel high-pressure hose, slightly pull it in the pull-out direction to check that it is installed firmly. In addition, check that there is approximately 1 mm play. After the check, install the stopper securely.

www.cargeek.ir

www.cargeek.ir

www.CarGeek.ir

GROUP 35C

ACTIVE STABILITY CONTROL SYSTEM (ASC)

www.cargeek.ir

CONTENTS

SERVICE SPECIFICATIONS 35C-4

SPECIAL TOOLS 35C-5

TROUBLESHOOTING 35C-6

DIAGNOSIS TROUBLESHOOTING FLOW 35C-6
NOTES WITH REGARD TO DIAGNOSIS . 35C-6
ABS WARNING LAMP INSPECTION 35C-7
DIAGNOSIS FUNCTION 35C-7
DIAGNOSIS CODE CHART 35C-16
DIAGNOSIS CODE PROCEDURES 35C-19
CODE NO. C100A: ABNORMALITY IN FL WHEEL SPEED SENSOR CIRCUIT 35C-19
CODE NO. C1015: ABNORMALITY IN FR WHEEL SPEED SENSOR CIRCUIT 35C-23
CODE NO. C1020: ABNORMALITY IN RL WHEEL SPEED SENSOR CIRCUIT 35C-27
CODE NO. C102B: ABNORMALITY IN RR WHEEL SPEED SENSOR CIRCUIT 35C-31
CODE NO. C1011: ABNORMALITY IN FL WHEEL SPEED SENSOR SIGNAL 35C-36
CODE NO. C101C: ABNORMALITY IN FR WHEEL SPEED SENSOR SIGNAL 35C-39
CODE NO. C1027: ABNORMALITY IN RL WHEEL SPEED SENSOR SIGNAL 35C-43
CODE NO. C1032: ABNORMALITY IN RR WHEEL SPEED SENSOR SIGNAL 35C-47
CODE NO. C1014: MUTUAL MONITORING OF FL WHEEL SPEED SENSOR 35C-50
CODE NO. C101F: MUTUAL MONITORING OF FR WHEEL SPEED SENSOR 35C-52
CODE NO. C102A: MUTUAL MONITORING OF RL WHEEL SPEED SENSOR 35C-54
CODE NO. C1035: MUTUAL MONITORING OF RR WHEEL SPEED SENSOR 35C-56
CODE NO. C1041: ABNORMALITY IN PERIODICAL SIGNAL FOR FL WHEEL SPEED SENSOR 35C-58
CODE NO. C1042: ABNORMALITY IN PERIODICAL SIGNAL FOR FR WHEEL SPEED SENSOR 35C-60
CODE NO. C1043: ABNORMALITY IN PERIODICAL SIGNAL FOR RL WHEEL SPEED SENSOR 35C-62
CODE NO. C1044: ABNORMALITY IN PERIODICAL SIGNAL FOR RR WHEEL SPEED SENSOR 35C-64
CODE NO. C1046: FL WHEEL SPEED SENSOR CONTROL PHASE TIME EXCEEDED 35C-67
CODE NO. C1047: FR WHEEL SPEED SENSOR CONTROL PHASE TIME EXCEEDED 35C-70
CODE NO. C1048: RL WHEEL SPEED SENSOR CONTROL PHASE TIME EXCEEDED 35C-74
CODE NO. C1049: RR WHEEL SPEED SENSOR CONTROL PHASE TIME EXCEEDED 35C-78
CODE NO. C104B: ABNORMALITY IN FL WHEEL INLET VALVE SYSTEM 35C-82
CODE NO. C2104: FAULTY VALVE POWER SUPPLY CIRCUIT 35C-83
CODE NO. C1073: FAULTY MOTOR DRIVE CIRCUIT 35C-87
CODE NO. C2116: ABNORMALITY IN POWER SUPPLY VOLTAGE IN PUMP MOTOR . . . 35C-91
CODE NO. C121D: ABNORMALITY IN BRAKE FLUID PRESSURE SENSOR CIRCUIT 35C-94
CODE NO. C121E: ABNORMALITY IN BRAKE FLUID

www.cargeek.ir

www.CarGeek.ir

PRESSURE SENSOR OUTPUT SIGNAL . 35C-96
CODE NO. C1000: ABNORMALITY IN STOP LAMP SWITCH CIRCUIT 35C-98
CODE NO. C123B: PROLONGED OPERATION OF ASC. 35C-102
CODE NO. C2200: ABNORMALITY IN ASC-ECU 35C-104
CODE NO. C2101: ABNORMALITY IN BATTERY VOLTAGE (HIGH VOLTAGE). 35C-104
Code No. C1395: Brake fluid filling not completed 35C-105
CODE NO. C121C: TORQUE REQUEST SIGNAL REJECTION 35C-106
CODE NO. C1290: CAN TIME-OUT ERROR 35C-107
CODE NO. C2203: VIN NOT WRITTEN. . . 35C-108
CODE NO. C2206: RE-EXECUTION OF VARIANT CODING 35C-109
CODE NO. C123C: ABNORMALITY IN G AND YAW RATE SENSOR (LATERAL G AND YAW RATE SENSOR) 35C-110
CODE NO. C2204: INTERNAL ABNORMALITY IN G AND YAW RATE SENSOR (LATERAL G AND YAW RATE SENSOR). 35C-113
CODE NO. C2111: BRAKE FLUID PRESSURE SENSOR POWER SUPPLY CIRCUIT (LOW INPUT) 35C-115
CODE NO. C2114: ABNORMALITY IN G AND YAW RATE SENSOR OPERATION VOLTAGE . 35C-116
CODE NO. C123A: ABNORMALITY IN SENSOR CALIBRATION 35C-119
CODE NO. C1219: ABNORMALITY IN STEERING WHEEL SENSOR SIGNAL. 35C-120
CODE NO. C121A: ABNORMALITY IN STEERING WHEEL SENSOR INITIALISATION 35C-122
CODE NO. C2205: INTERNAL MALFUNCTION OF STEERING WHEEL SENSOR 35C-123
CODE NO. C2002: VALVE CALIBRATION NOT COMPLETED 35C-123
CODE NO. C2003: CONTROL PARAMETER IMCOMPLETE 35C-124
CODE NO. C1608: IMPLAUSIBLE DIAGNOSIS DATA 35C-126
CODE NO. U0001: BUS-OFF. 35C-129
CODE NO. U0404 AS SIGNAL MALFUNCTION 35C-130
CODE NO. U0100: ENGINE TIME-OUT ERROR 35C-131
CODE NO. U1004 AS CAN TIME-OUT . . . 35C-132
Code No. U0125: G and yaw rate sensor message time-out error/message error 35C-133
CODE NO. U0401: ENGINE MALFUNCTION DETECTED 35C-135
CODE NO. U0428: COMMUNICATION ERROR IN STEERING WHEEL SENSOR 35C-136
CODE NO. U1003: G AND YAW RATE SENSOR BUS-OFF 35C-137
CODE NO. U1415: VARIANT CODING NOT COMPLETED 35C-139
CODE NO. U1417: VARIANT CODING VALUE INVALID (INCLUDES FAULTY INSTALLATION) 35C-140
SYMPTOM CHART 35C-141
SYMPTOM PROCEDURES 35C-142
THE SCAN TOOL CAN NOT COMMUNICATE WITH TCL/ACTIVE STABILITY CONTROL SYSTEM-ECU 35C-142
ASC OFF INDICATOR LAMP FLASHES AT A RATE OF 2HZ. 35C-142
BRAKE WARNING LAMP STAYS ON WITH THE PARKING BRAKE LEVER RELEASED. . . . 35C-144
WHEN THE IGNITION SWITCH IS TURNED TO THE "ON" POSITION (ENGINE STOPPED), THE TCL OFF INDICATOR LAMP DOES NOT ILLUMINATE. 35C-147
BRAKE WARNING LAMP DOES NOT ILLUMINATE WHEN THE IGNITION SWITCH IS TURNED TO ON POSITION (ENGINE STOPPED). 35C-149
ABS WARNING LAMP STAYS ON AFTER THE ENGINE IS STARTED. 35C-150
ASC INDICATOR LAMP STAYS ON AFTER THE ENGINE IS STARTED. 35C-151
ASC-OFF INDICATOR LAMP STAYS ON AFTER THE ENGINE IS STARTED. 35C-152
WHEN THE TCL SWITCH IS PUSHED, TCL SYSTEM CANNOT BE DISABLED. 35C-155
FAULTY ABS OPERATION 35C-157
ABNORMAL ACTIVE STABILITY CONTROL SYSTEM OPERATION 35C-158
TCL/ACTIVE STABILITY CONTROL SYSTEM-ECU POWER SUPPLY CIRCUIT SYSTEM. 35C-159
STEERING WHEEL SENSOR POWER SUPPLY SYSTEM 35C-167
ABS/STABILITY CONTROL/TCL OPERATES TOO FREQUENTLY. 35C-169
ESS INOPERATIVE OR IMPROPER OPERATIVE 35C-171
THE INITIAL CHECK SOUND OF HYDRAULIC UNIT LOUD. 35C-172
DATA LIST REFERENCE TABLE. 35C-172
ACTUATOR TEST REFERENCE TABLE . . 35C-175
CHECK AT ECU TERMINAL. 35C-177
ON-VEHICLE SERVICE 35C-179

www.cargeek.ir

www.CarGeek.ir

WHEEL SPEED SENSOR OUTPUT CURRENT MEASUREMENT 35C-179
HYDRAULIC UNIT CHECK 35C-179
REMEDY FOR A DISCHARGED BATTERY 35C-182
ALL SENSOR CALIBRATION. 35C-182
G AND YAW RATE SENSOR CALIBRATION 35C-182
STEERING WHEEL SENSOR CALIBRATION 35C-183
BRAKE FLUID PRESSURE SENSOR CALIBRATION 35C-184

ASC OFF SWITCH. 35C-184
ASC OFF SWITCH REMOVAL AND INSTALLATION 35C-184
ASC OFF SWITCH 35C-185

HYDRAULIC UNIT 35C-185
HYDRAULIC UNIT REMOVAL AND INSTALLATION 35C-185

WHEEL SPEED SENSOR 35C-188
WHEEL SPEED SENSOR REMOVAL AND INSTALLATION 35C-188
WHEEL SPEED SENSOR INSPECTION . . 35C-188

G AND YAW RATE SENSOR. 35C-189
G AND YAW RATE SENSOR REMOVAL AND INSTALLATION 35C-189

STEERING WHEEL SENSOR 35C-190
STEERING WHEEL SENSOR REMOVAL AND INSTALLATION 35C-190

www.cargeek.ir

www.cargeek.ir

www.CarGeek.ir

SERVICE SPECIFICATIONS

M1355008200089

Item	Standard value
Wheel speed sensor current mA	5.9 – 8.4 or 11.8 – 16.8
Wheel speed sensor insulation resistance MΩ	5 or more

www.cargeek.ir

www.cargeek.ir

www.CarGeek.ir

SPECIAL TOOL

M1355005800349

Tool	Number	Name	Use
a 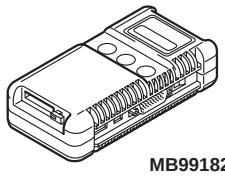 MB991824 b 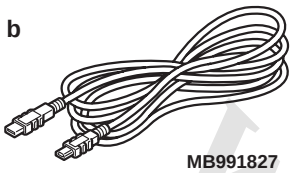 MB991827 c 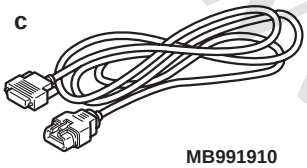 MB991910 d 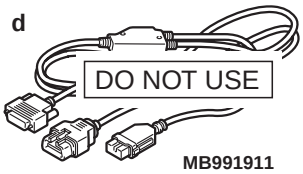 MB991911 e 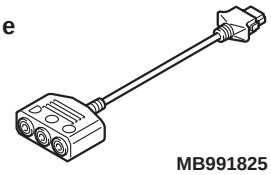 MB991825 f 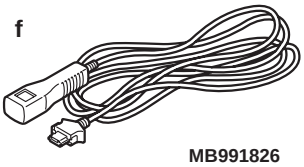 MB991826 MB991955	MB991955 a. MB991824 b. MB991827 c. MB991910 d. MB991911 e. MB991825 f. MB991826	M.U.T.-III sub-assembly a. Vehicle Communication Interface (V.C.I.) b. M.U.T.-III USB cable c. M.U.T.-III main harness A (Vehicles with CAN communication system) d. M.U.T.-III main harness B (Vehicles without CAN communication system) e. M.U.T.-III measurement adapter f. M.U.T.-III trigger harness	⚠ CAUTION **For vehicles with CAN communication, use M.U.T.-III main harness A to send the simulated vehicle speed. If you connect M.U.T.-III main harness B instead, CAN communication does not function correctly.** ASC check (Diagnosis code display, data list display and calibration by M.U.T.-III)

www.cargeek.ir

www.CarGeek.ir

Tool	Number	Name	Use
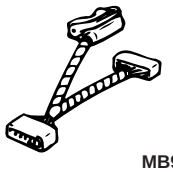 MB991997	MB991997	ASC check harness	Voltage inspection at ASC-ECU terminals
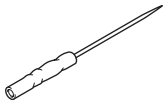 MB992006	MB992006	Extra fine probe	Continuity check and voltage measurement at wiring harness or connector
	MB991709	Wiring harness set	Output current measure at the wheel speed sensor

TROUBLESHOOTING

DIAGNOSIS TROUBLESHOOTING FLOW

M1355000900114

Refer to GROUP 00 – How to Use Troubleshooting/ Inspection Service Points .

PRECAUTIONS FOR DIAGNOSIS

M1355009500168

1. ASC controls brake pressure by the assistance of ECU. The symptoms described in the chart below may occur during the normal ASC operation, and they do not indicate any sign of malfunction.

Symptoms	Description of symptoms
• When the ASC operates, the operating noise is generated from the motor. (Squeak noise) • Noise is generated from the brake pedal together with the vibration. (Gride noise) • When ABS operates, the system repeats the activation and deactivation. At this time, the noise is generated from the chassis components. (Clonk: Suspension, Squeaky: Tyres)	These noises are generated when the system and brake pedal operate normally, and they do not indicate any sign of malfunction.
• A slight shock may be felt when depressing the brake pedal lightly during the low speed driving. • Small clicking noise may be heard from the engine compartment.	This noise is generated when the system operation check (startup check performed at the vehicle speed which is a few km/h higher than the predetermined vehicle speed) is performed, and it does not indicate malfunction.

2. On the snowy or gravelled roads, a vehicle with ABS would have longer braking distance compared to the one without ABS. Considering this characteristics, advise the customer to drive the vehicle safely at lower speed and not to put too much confidence in the ABS system when driving on the above-mentioned roads.
3. The diagnosis code detection condition depends on each diagnosis code. When the trouble symptoms are rechecked, conditions described in the description for the diagnosis code procedures should be met.

www.cargeek.ir

www.CarGeek.ir

ABS WARNING LAMP, ASC WARNING/ OPERATION LAMP AND BRAKE WARNING LAMP CHECK

M1352012001208

Check that ABS and brake warning lamps, ASC warning/operation lamp illuminate as follows.

NOTE: The brake warning lamp is used as a warning lamp for parking brake, brake fluid level, and EBD control.

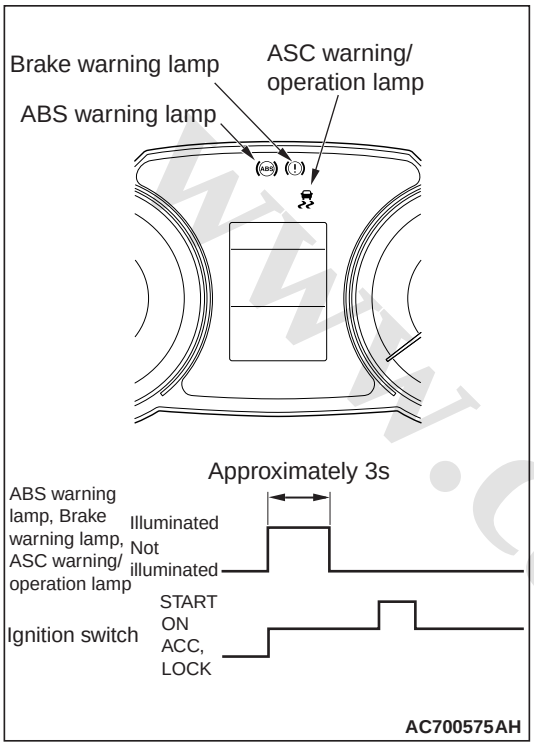

1. When the ignition switch is turned to the ON position, ABS and brake warning lamps, ASC warning/operation lamp illuminate.
2. The ABS and brake warning lamps, ASC warning/ operation lamp illuminate for three seconds[*1] and then turn OFF[*2].
3. Otherwise, check the diagnosis code.

NOTE:

- *[*1]: The ABS warning lamp may stay ON until the vehicle speed reaches 10 km/h. As far as ABS-ECU stores any diagnosis code related to the wheel speed sensor malfunction or the motor malfunction as past trouble, ABS-ECU continues illuminating the ABS warning lamp until it verifies that the malfunction for that code is resolved (startup check).*
- *[*2]: The brake warning lamp does not turn OFF when the parking brake is applied or the brake fluid level is lowered.*

DIAGNOSTIC FUNCTION

M1355001000846

ASC-ECU has the following functions for easier system checks.

- Diagnosis code set (Refer to P.35C-16).
- Service data output (Refer to P.35C-172).
- Actuator test (Refer to P.35C-175).
- Freeze frame data output (Refer to).

All the above items can be diagnosed using M.U.T.-III.

CHECK OF FREEZE FRAME DATA

The freeze frame data can be checked by using the M.U.T.-III.

When detecting fault and storing the diagnosis code, the ECU connected to CAN bus line obtains the data before the determination of the diagnosis code and the data when the diagnosis code is determined, and then stores the ECU status of that time. By analysing each data from M.U.T.-III, the troubleshooting can be performed more efficiently. The displayed items are as the table below.

www.cargeek.ir

www.CarGeek.ir

Display item list

Item No.	Item name	Data item	Unit
1	Odometer	Total driving distance after the diagnosis code is generated	km
2	Ignition cycle	Number of times the ignition switch is turned "ON" or "LOCK (OFF)" after the past failure transition	Number of counts is displayed.
4	Accumulated minute	Cumulative time for current malfunction of diagnosis code	min
5	Power supply voltage	Voltage of power supply when the diagnosis code is generated	V
8	Lateral G sensor	Lateral G of G and yaw rate sensor when the diagnosis code is generated	G
9	G sensor	Longitudinal G of G and yaw rate sensor when the diagnosis code is generated	G
10	Master cylinder pressure	Master cylinder pressure of Master cylinder pressure sensor when the diagnosis code is generated	bar
11	Steering angle	Steering angle of steering wheel sensor when the diagnosis code is generated	bar
12	Yaw rate sensor	Yaw rate of G and yaw rate sensor when the diagnosis code is generated	G
13	Stop lamp switch	Stop lamp switch condition when the diagnosis code is generated: OFF/ON	–
21	Pump motor	Pump motor condition when the diagnosis code is generated: OFF/ON	–
28	ASC/TCL off switch	ASC OFF switch condition when the diagnosis code is generated: OFF/ON	–
301	ABS control	ABS control when the diagnosis code is generated: OFF/ON	–
302	Brake TCL control	Traction control (brake control) when the diagnosis code is generated: OFF/ON	–
303	Engine TCL control	Traction control (engine control) when the diagnosis code is generated: OFF/ON	–
304	ASC control	ASC control when the diagnosis code is generated: OFF/ON	–
305	Brake TCL operation	Traction control (brake control) operation when the diagnosis code is generated: Permission/Prohibition	–
401	FL wheel speed sensor	Wheel speed (FL) when the diagnosis code is generated	km/h
402	FR wheel speed sensor	Wheel speed (FR) when the diagnosis code is generated	km/h
403	RL wheel speed sensor	Wheel speed (RL) when the diagnosis code is generated	km/h
404	RR wheel speed sensor	Wheel speed (RR) when the diagnosis code is generated	km/h

www.cargeek.ir

www.CarGeek.ir

FAIL-SAFE FUNCTIONS

ASC-ECU constantly monitors the input and output signals. If an error is detected in the system, ASC-ECU sends a fail signal and the corresponding indicator lamp is illuminated or blinks. Various controls are processed depending on the cause of malfunction as shown below.

Illumination condition of warning lamp and display in case of failure

Diagnosis code No.	Item	Brake warning lamp, brake warning display	ABS warning lamp, ABS warning display	ASC warning lamp, ASC warning display	ASC OFF display ASC OFF lamp
C100A	Abnormality in FL wheel speed sensor circuit	OFF*1	ON *2	ON	ON
C1015	Abnormality in FR wheel speed sensor circuit				
C1020	Abnormality in RL wheel speed sensor circuit				
C102B	Abnormality in RR wheel speed sensor circuit				
C1011	Abnormality in FL wheel speed sensor signal	OFF*1	ON *2	ON	ON
C101C	Abnormality in FR wheel speed sensor signal				
C1027	Abnormality in RL wheel speed sensor signal				
C1032	Abnormality in RR wheel speed sensor signal				
C1014	Mutual monitoring of FL wheel speed sensor	OFF*1	ON *2	ON	ON
C101F	Mutual monitoring of FR wheel speed sensor				
C102A	Mutual monitoring of RL wheel speed sensor				
C1035	Mutual monitoring of RR wheel speed sensor				
C1041	Abnormality in periodical signal for FL wheel speed sensor	OFF*1	ON *2	ON	ON
C1042	Abnormality in periodical signal for FR wheel speed sensor				
C1043	Abnormality in periodical signal for RL wheel speed sensor				
C1044	Abnormality in periodical signal for RR wheel speed sensor				

www.cargeek.ir

www.CarGeek.ir

Diagnosis code No.	Item	Brake warning lamp, brake warning display	ABS warning lamp, ABS warning display	ASC warning lamp, ASC warning display	ASC OFF display ASC OFF lamp
C1046	FL wheel speed sensor control phase time exceeded	OFF*1	ON *2	ON	ON
C1047	FR wheel speed sensor control phase time exceeded				
C1048	RL wheel speed sensor control phase time exceeded				
C1049	RR wheel speed sensor control phase time exceeded				
C104B	Abnormality in FL wheel inlet valve system	ON	ON	ON	ON
C104F	Abnormality in FR wheel inlet valve system				
C1053	Abnormality in RL wheel inlet valve system				
C1057	Abnormality in RR wheel inlet valve system				
C105F	Abnormality in FL wheel outlet valve system	ON	ON	ON	ON
C1063	Abnormality in FR wheel outlet valve system				
C1067	Abnormality in RL wheel outlet valve system				
C105B	Abnormality in RR wheel outlet valve system				
C1200	Abnormality in FL/RR wheel cut valve system	ON	ON	ON	ON
C1204	Abnormality in FR/RL wheel cut valve system				
C1208	Abnormality in FL/RR wheel suction valve system				
C120C	Abnormality in FR/RL wheel suction valve system				
C2104	Faulty valve power supply circuit	ON	ON	ON	ON
C1073	Faulty motor drive circuit	OFF	ON *2	ON	ON
C2116	Low or high power supply voltage in pump motor	OFF	ON *2	ON	ON
C121D	Abnormality in brake fluid pressure sensor circuit	OFF	ON	ON	ON
C121E	Abnormality in brake fluid pressure sensor output signal	OFF	ON	ON	ON

www.cargeek.ir

www.CarGeek.ir

Diagnosis code No.	Item		Brake warning lamp, brake warning display	ABS warning lamp, ABS warning display	ASC warning lamp, ASC warning display	ASC OFF display ASC OFF lamp
C1000	Abnormality in stop lamp switch circuit		OFF	OFF	ON	ON
C123B	Prolonged operation of ASC		OFF	OFF	ON	ON
C2200	Abnormality in ASC-ECU		ON*3	ON*4	ON	ON
C2101	Abnormality in battery voltage (high voltage)	18.0 ± 1.0 V or more	ON	ON	ON	ON
C1395	Brake fluid filling not completed		OFF	ABS warning lamp: Flashing (1 Hz) ABS warning display: ON	OFF	OFF
C121C	Torque request signal rejection		OFF	OFF	ON	ON
C1290	CAN time-out error		OFF	OFF	ON	ON
C2203	Chassis No. not programmed		OFF	ON	OFF	OFF
C2206	Re-execution of variant coding		OFF	ON	ON	ON
C123C	Abnormality in G & yaw rate sensor output value	Abnormality in lateral G and yaw rate output value	OFF	OFF	ON	ON
C2204	Internal abnormality in G & yaw rate sensor		OFF	OFF	ON	ON
C2111	Brake fluid pressure sensor power supply circuit	Low input	OFF	ON	ON	ON
C2112	Brake fluid pressure sensor power supply circuit	High input	OFF	ON	ON	ON
C2114*5	Abnormality in G & yaw rate sensor operation voltage	Low voltage (6.5 ± 0.5 V or less)	OFF	OFF	ON	ON
C2115	Abnormality in G & yaw rate sensor operation voltage	High voltage (18.0 ± 1.0 V or more)	OFF	OFF	ON	ON

www.cargeek.ir

www.CarGeek.ir

Diagnosis code No.	Item		Brake warning lamp, brake warning display	ABS warning lamp, ABS warning display	ASC warning lamp, ASC warning display	ASC OFF display ASC OFF lamp
C123A	Abnormality in sensor calibration		OFF	OFF	ON	ON
C1219	Abnormality in steering wheel sensor signal		OFF	OFF	ON	ON
C121A	Abnormality in steering wheel sensor calibration	Steering wheel sensor neutral point not learned	OFF	ABS warning lamp: Flashing (2 Hz) ABS warning display: ON	ON	ON
C2205	Internal abnormality in steering wheel sensor		OFF	OFF	ON	ON
C2002	Valve calibration error		ON	ON	ON	ON
C2003	Control parameter not implement		OFF	OFF	ON	ON
C1608	Implausible diagnosis data		OFF	OFF	OFF	OFF
U0001	Bus-off		OFF	OFF	OFF	OFF
U0100	Engine time-out error		OFF	OFF	OFF	OFF
U0101	A/T or CVT time-out error		OFF	OFF	OFF	OFF
U0126	Steering wheel sensor time-out error		OFF	OFF	OFF	OFF
U0141	ETACS time-out error		OFF	OFF	OFF	OFF
U0125	G & yaw rate sensor message time-out error/message error		OFF	OFF	ON	ON
U0401	Engine signal malfunction detected		OFF	OFF	ON	ON
U0404	Abnormality in AS&G signal		OFF	OFF	OFF	OFF
U0428	Steering wheel sensor CRC, message error		OFF	OFF	ON	ON
U1003	G & yaw rate sensor bus-off		OFF	OFF	ON	ON
U1004	AS&G CAN time-out		OFF	OFF	OFF	OFF
U1415	Variant coding not implemented		OFF	ON	ON	ON
U1417	Variant coding value invalid (includes faulty installation)		OFF	ON*4	ON	ON

www.cargeek.ir
www.cargeek.ir

www.CarGeek.ir

NOTE:

- *[*1]: Turns on when two or more wheels are faulty.*
- *[*2]: Stays on until the vehicle speed reaches 10 km/h when the ignition switch is turned to ON next time.*
- *[*3]: Does not illuminate when there is no effect to the EBD function.*
- *[*4]: Does not illuminate when there is no effect to the ABS function.*
- *[*5]: This diagnosis code is not set with the vehicle speed of 20 km/h or less.*

Under EBD, ABS, stability control and TCL control in case of failure

Diagnosis code No.	Item	EBD	ABS	Stability control	TCL	ESS
C100A	Abnormality in FL wheel speed sensor circuit	Enabled[*3]	Prohibited	Prohibited	Prohibited	Prohibited
C1015	Abnormality in FR wheel speed sensor circuit					
C1020	Abnormality in RL wheel speed sensor circuit					
C102B	Abnormality in RR wheel speed sensor circuit					
C1011	Abnormality in FL wheel speed sensor signal	Enabled[*3]	Prohibited	Prohibited	Prohibited	Prohibited
C101C	Abnormality in FR wheel speed sensor signal					
C1027	Abnormality in RL wheel speed sensor signal					
C1032	Abnormality in RR wheel speed sensor signal					
C1014	Mutual monitoring of FL wheel speed sensor	Enabled[*3]	Prohibited	Prohibited	Prohibited	Prohibited
C101F	Mutual monitoring of FR wheel speed sensor					
C102A	Mutual monitoring of RL wheel speed sensor					
C1035	Mutual monitoring of RR wheel speed sensor					
C1041	Abnormality in periodical signal for FL wheel speed sensor	Enabled[*3]	Prohibited	Prohibited	Prohibited	Prohibited
C1042	Abnormality in periodical signal for FR wheel speed sensor					
C1043	Abnormality in periodical signal for RL wheel speed sensor					
C1044	Abnormality in periodical signal for RR wheel speed sensor					

www.cargeek.ir

www.CarGeek.ir

Diagnosis code No.	Item	EBD	ABS	Stability control	TCL	ESS
C1046	FL wheel speed sensor control phase time exceeded	Enabled*3	Prohibited	Prohibited	Prohibited	Prohibited
C1047	FR wheel speed sensor control phase time exceeded					
C1048	RL wheel speed sensor control phase time exceeded					
C1049	RR wheel speed sensor control phase time exceeded					
C104B	Abnormality in FL wheel inlet valve system	Prohibited	Prohibited	Prohibited	Prohibited	Prohibited
C104F	Abnormality in FR wheel inlet valve system					
C1053	Abnormality in RL wheel inlet valve system					
C1057	Abnormality in RR wheel inlet valve system					
C105F	Abnormality in FL wheel outlet valve system	Prohibited	Prohibited	Prohibited	Prohibited	Prohibited
C1063	Abnormality in FR wheel outlet valve system					
C1067	Abnormality in RL wheel outlet valve system					
C105B	Abnormality in RR wheel outlet valve system					
C1200	Abnormality in FL/RR wheel cut valve system	Prohibited	Prohibited	Prohibited	Prohibited	Prohibited
C1204	Abnormality in FR/RL wheel cut valve system					
C1208	Abnormality in FL/RR wheel suction valve system					
C120C	Abnormality in FR/RL wheel suction valve system					
C2104	Faulty valve power supply circuit	Prohibited	Prohibited	Prohibited	Prohibited	Prohibited
C1073	Faulty motor drive circuit	Enabled	Prohibited	Prohibited	Prohibited	Prohibited
C2116	Low or high power supply voltage in pump motor	Enabled	Prohibited	Prohibited	Prohibited	Prohibited
C121D	Abnormality in brake fluid pressure sensor circuit	Enabled	Prohibited	Prohibited	Prohibited	Enabled
C121E	Abnormality in brake fluid pressure sensor output signal	Enabled	Prohibited	Prohibited	Prohibited	Enabled
C1000	Abnormality in stop lamp switch circuit	Enabled	Enabled	Prohibited	Prohibited	Enabled
C123B	Prolonged operation of ASC	Enabled	Enabled	Prohibited	Prohibited	Enabled

www.cargeek.ir

www.CarGeek.ir

Diagnosis code No.	Item		EBD	ABS	Stability control	TCL	ESS
C2200	Abnormality in ASC-ECU		Prohibited* 2	Prohibited* 1	Prohibited	Prohibited	Prohibited* 1
C2101	Abnormality in battery voltage (high voltage)	18.0 ± 1.0 V or more	Prohibited	Prohibited	Prohibited	Prohibited	Prohibited
C1395	Brake fluid filling not completed		Enabled	Enabled	Enabled	Enabled	Enabled
C121C	Torque request signal rejection		Enabled	Enabled	Prohibited	Prohibited	Enabled
C1290	CAN time-out error		Enabled	Enabled	Prohibited	Prohibited	Enabled
C2203	Chassis No. not programmed		Enabled	Enabled	Enabled	Enabled	Enabled
C2206	Re-execution of variant coding		Enabled	Prohibited	Prohibited	Prohibited	Prohibited
C123C	Abnormality in G & yaw rate sensor output value	Abnormality in lateral G and yaw rate output value	Enabled	Enabled	Prohibited	Prohibited	Enabled
C2204	Internal abnormality in G & yaw rate sensor		Enabled	Enabled	Prohibited	Prohibited	Enabled
C2111	Brake fluid pressure sensor power supply circuit	Low input	Enabled	Prohibited	Prohibited	Prohibited	Prohibited
C2112	Brake fluid pressure sensor power supply circuit	High input	Enabled	Prohibited	Prohibited	Prohibited	Prohibited
C2114*4	Abnormality in G & yaw rate sensor operation voltage	Low voltage (6.5 ± 0.5 V or less)	Enabled	Enabled	Prohibited	Prohibited	Enabled
C2115	Abnormality in G & yaw rate sensor operation voltage	High voltage (18.0 ± 1.0 V or more)	Enabled	Enabled	Prohibited	Prohibited	Enabled
C123A	Abnormality in sensor calibration		Enabled	Enabled	Prohibited	Prohibited	Enabled
C1219	Abnormality in steering wheel sensor signal		Enabled	Enabled	Prohibited	Prohibited	Enabled
C121A	Abnormality in steering wheel sensor calibration	Steering wheel sensor neutral point not learned	Enabled	Enabled	Prohibited	Prohibited	Enabled
C2205	Internal abnormality in steering wheel sensor		Enabled	Enabled	Prohibited	Prohibited	Enabled
C2002	Valve calibration error		Prohibited	Prohibited	Prohibited	Prohibited	Prohibited

www.cargeek.ir

www.CarGeek.ir

Diagnosis code No.	Item	EBD	ABS	Stability control	TCL	ESS
C2003	Control parameter not implement	Enabled	Enabled	Prohibited	Prohibited	Enabled
C1608	Implausible diagnosis data	Enabled	Enabled	Enabled	Enabled	Enabled
U0001	Bus-off	Enabled	Enabled	Enabled	Enabled	Enabled
U0100	Engine time-out error	Enabled	Enabled	Enabled	Enabled	Enabled
U0101	A/T or CVT time-out error	Enabled	Enabled	Enabled	Enabled	Enabled
U0126	Steering wheel sensor time-out error	Enabled	Enabled	Enabled	Enabled	Enabled
U0141	ETACS time-out error	Enabled	Enabled	Enabled	Enabled	Prohibited
U0125	G & yaw rate sensor message time-out error/message error	Enabled	Enabled	Prohibited	Prohibited	Enabled
U0401	Engine signal malfunction detected	Enabled	Enabled	Prohibited	Prohibited	Enabled
U0404	Abnormality in AS&G signal	Prohibited	Prohibited	Prohibited	Prohibited	Prohibited
U0428	Steering wheel sensor CRC, message error	Enabled	Enabled	Prohibited	Prohibited	Enabled
U1003	G & yaw rate sensor bus-off	Enabled	Enabled	Prohibited	Prohibited	Enabled
U1004	AS&G CAN time-out	Prohibited	Prohibited	Prohibited	Prohibited	Prohibited
U1415	Variant coding not implemented	Enabled	Prohibited	Prohibited	Prohibited	Prohibited
U1417	Variant coding value invalid (includes faulty installation)	Enabled	Prohibited	Prohibited	Prohibited	Prohibited*1

NOTE:

- *[*1]: When ABS warning lamp is turned on.*
- *[*2]: When brake warning lamp is turned on.*
- *[*3]: Prohibited when two or more wheels are faulty.*
- *[*4]: This diagnosis code is not set with the vehicle speed of 20 km/h or less.*

HOW TO READ DIAGNOSIS CODE

Refer to GROUP 00 – How to Use Troubleshooting and Inspection Service Points .

HOW TO ERASE DIAGNOSIS CODE

Refer to GROUP 00 – How to Use Troubleshooting and Inspection Service Points .

DIAGNOSIS CODE CHART

M1355001101318

⚠ CAUTION

During diagnosis, a diagnosis code associated with other system may be set when the ignition switch is turned on with connector(s) disconnected. On completion, confirm all systems for diagnosis code(s). If diagnosis code(s) are set, erase them all.

Diagnosis code No.	Item	Reference page
C100A	Abnormality in FL wheel speed sensor circuit	P.35C-19
C1015	Abnormality in FR wheel speed sensor circuit	P.35C-23
C1020	Abnormality in RL wheel speed sensor circuit	P.35C-27

www.cargeek.ir

www.CarGeek.ir

Diagnosis code No.	Item	Reference page
C102B	Abnormality in RR wheel speed sensor circuit	P.35C-31
C1011	Abnormality in FL wheel speed sensor signal	P.35C-36
C101C	Abnormality in FR wheel speed sensor signal	P.35C-39
C1027	Abnormality in RL wheel speed sensor signal	P.35C-43
C1032	Abnormality in RR wheel speed sensor signal	P.35C-47
C1014	Mutual monitoring of FL wheel speed sensor	P.35C-50
C101F	Mutual monitoring of FR wheel speed sensor	P.35C-52
C102A	Mutual monitoring of RL wheel speed sensor	P.35C-54
C1035	Mutual monitoring of RR wheel speed sensor	P.35C-56
C1041	Abnormality in periodical signal for FL wheel speed sensor	P.35C-58
C1042	Abnormality in periodical signal for FR wheel speed sensor	P.35C-60
C1043	Abnormality in periodical signal for RL wheel speed sensor	P.35C-62
C1044	Abnormality in periodical signal for RR wheel speed sensor	P.35C-64
C1046	FL wheel speed sensor control phase time exceeded	P.35C-67
C1047	FR wheel speed sensor control phase time exceeded	P.35C-70
C1048	RL wheel speed sensor control phase time exceeded	P.35C-74
C1049	RR wheel speed sensor control phase time exceeded	P.35C-78
C104B	Abnormality in FL wheel inlet valve system	P.35C-82
C104F	Abnormality in FR wheel inlet valve system	
C1053	Abnormality in RL wheel inlet valve system	
C1057	Abnormality in RR wheel inlet valve system	
C105F	Abnormality in FL wheel outlet valve system	
C1063	Abnormality in FR wheel outlet valve system	
C1067	Abnormality in RL wheel outlet valve system	
C105B	Abnormality in RR wheel outlet valve system	
C1200	Abnormality in FL/RR wheel cut valve system	
C1204	Abnormality in FR/RL wheel cut valve system	
C1208	Abnormality in FL/RR wheel suction valve system	
C120C	Abnormality in FR/RL wheel suction valve system	
C2104	Faulty valve power supply circuit	P.35C-83
C1073	Faulty motor drive circuit	P.35C-87
C2116	Low or high power supply voltage in pump motor	P.35C-91
C121D	Abnormality in brake fluid pressure sensor circuit	P.35C-94
C121E	Abnormality in brake fluid pressure sensor output signal	P.35C-96
C1000	Abnormality in stop lamp switch circuit	P.35C-98
C123B	Prolonged operation of ASC	P.35C-102
C2200	Abnormality in ASC-ECU	P.35C-104

www.cargeek.ir

www.CarGeek.ir

Diagnosis code No.	Item		Reference page
C2101	Abnormality in battery voltage (high voltage)	18.0 ± 1.0 V or more	P.35C-104
C1395	Brake fluid filling not completed		P.35C-105
C121C	Torque request signal rejection		P.35C-106
C1290	CAN time-out error		P.35C-107
C2203	Chassis No. not programmed		P.35C-108
C2206	Re-execution of variant coding		P.35C-109
C123C	Abnormality in G and yaw rate sensor output value	Abnormality in lateral G and yaw rate output value	P.35C-110
C2204	Internal abnormality in G and yaw rate sensor		P.35C-113
C2111	Brake fluid pressure sensor power supply circuit	Low input	P.35C-115
C2112	Brake fluid pressure sensor power supply circuit	High input	
C2114	Abnormality in G and yaw rate sensor operation voltage	Low voltage (below 6.5 ± 0.5 V)	P.35C-116
C2115	Abnormality in G and yaw rate sensor operation voltage	High voltage (18.0 ± 1.0 V or more)	
C123A	Abnormality in sensor calibration		P.35C-119
C1219	Abnormality in steering wheel sensor signal		P.35C-120
C121A	Abnormality in steering wheel sensor calibration	Steering wheel sensor neutral point not learned	P.35C-122
C2205	Internal abnormality in steering wheel sensor		P.35C-123
C2002	Valve calibration not completed		P.35C-123
C2003	Control parameter not implement		P.35C-124
C1608	Implausible diagnosis data		P.35C-126
U0001	Bus-off		P.35C-129
U0100	Engine time-out error		P.35C-131
U0101	A/T or CVT time-out error		
U0126	Steering wheel sensor time-out error		
U0141	ETACS time-out error		
U0125	G and yaw rate sensor message time-out error/message error		P.35C-133
U0401	Engine signal malfunction detected		P.35C-135
U0404	Abnormality in AS&G signal		P.35C-130
U0428	Communication error in steering wheel sensor		P.35C-136
U1003	G and yaw rate sensor bus-off		P.35C-137
U1004	AS&G CAN time-out		P.35C-132
U1415	Variant coding not implemented		P.35C-139
U1417	Variant coding value invalid (includes faulty installation)		P.35C-140

www.cargeek.ir

www.CarGeek.ir

DIAGNOSIS CODE PROCEDURES

Code No. C100A Abnormality in FL wheel speed sensor circuit

Wheel Speed Sensor Circuit

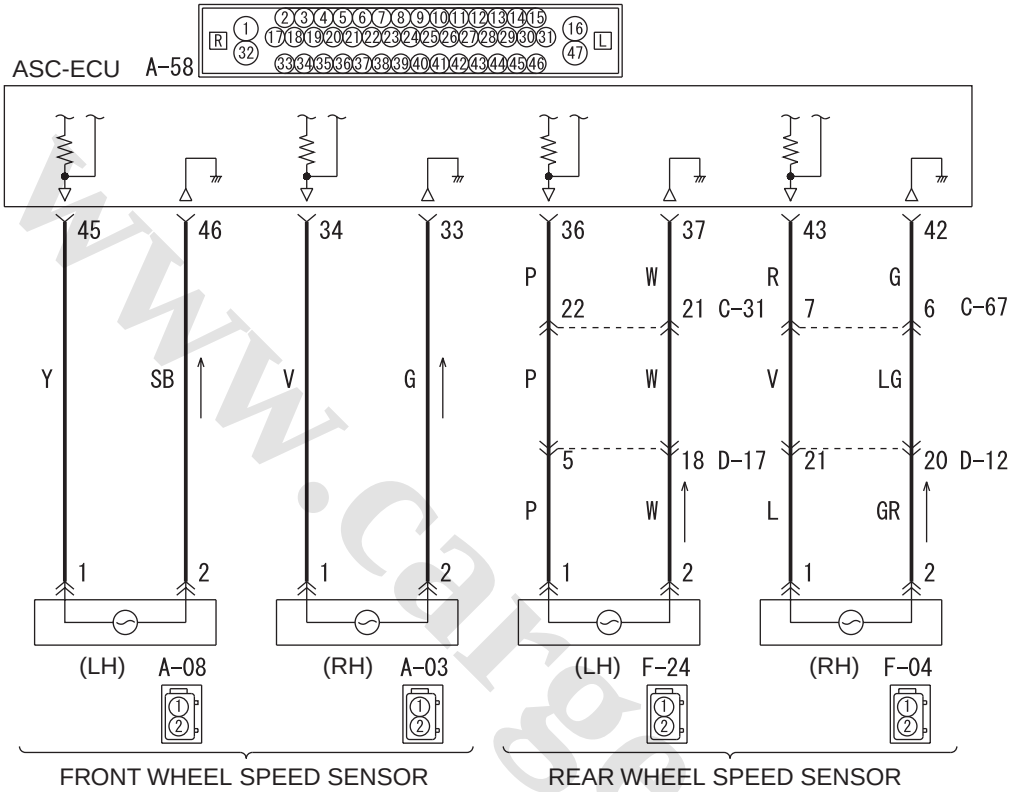

Wire colour code
B : Black LG : Light green G : Green L : Blue W : White Y : Yellow SB : Sky blue
BR : Brown O : Orange GR : Grey R : Red P : Pink V : Violet PU : Purple SI : Silver

ACB02565

Connector: A-08 <LHD>

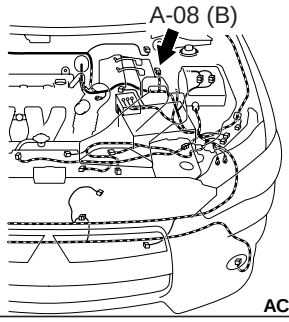

AC612690AP

Connectors: A-08, A-58 <RHD>

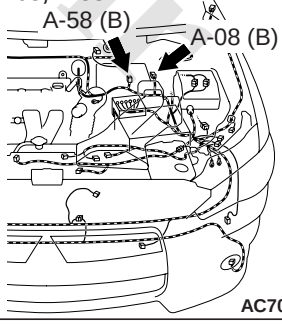

AC701238AE

www.cargeek.ir

www.CarGeek.ir

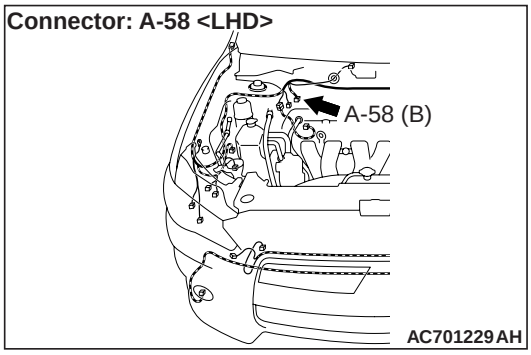

⚠ CAUTION

- **If there is any problem in the CAN bus lines, an incorrect diagnosis code may be set. Prior to this diagnosis, diagnose the CAN bus lines (Refer to GROUP 54C – CAN Bus Diagnostics Table).**
- **Whenever ECU is replaced, ensure that the CAN bus lines are normal.**
- **When the hydraulic unit (integrated with ASC-ECU) is replaced, always carry out the calibration of the steering wheel sensor, the G and yaw rate sensor and brake fluid pressure sensor (Refer to P.35C-182, P.35C-183 and P.35C-184).**

OPERATION

- The wheel speed sensor is a kind of a pulse generator. It consists of encoders (a plate on which north and south pole sides of the magnets are arranged alternately) for detecting the wheel speed which rotates at the same speed of the wheels and wheel speed sensors. This sensor outputs frequency pulse signals in proportion to the wheel speed.
- The pulse signals, which the wheel speed sensor creates, are sent to ASC-ECU. ASC-ECU uses the frequency of the pulse signals to determine the wheel speed.

DIAGNOSIS CODE SET CONDITIONS

ASC-ECU monitors the voltage fluctuation in each wheel speed sensor circuit. If ASC-ECU detects the open or short circuit in the circuit, it will set a diagnosis code.

PROBABLE CAUSES

Current trouble

- Damaged wiring harness and connectors
- Noise interference
- Malfunction of wheel speed sensor
- Malfunction of ASC-ECU

Past trouble

- Carry out diagnosis with particular emphasis on wiring harness and connector failures between ASC-ECU and the wheel speed sensor. For diagnosis procedures, refer to How to treat past trouble (GROUP 00 – How to Use Troubleshooting/ How to Treat Past Trouble).

DIAGNOSTIC PROCEDURE

STEP 1. M.U.T.-III CAN bus diagnostics

Use M.U.T.-III to diagnose the CAN bus lines.

Q: Is the check result normal?

YES : Go to Step 3.
NO : Repair the CAN bus lines (Refer to GROUP 54C – CAN Bus Diagnostics Table). On completion, go to Step 2.

STEP 2. Diagnosis code recheck after resetting CAN bus lines

Q: Is diagnosis code No. C100A set?

YES : Go to Step 3.
NO : This diagnosis is complete.

STEP 3. M.U.T.-III data list

Check the following data list (Refer to P.35C-172).

- Item No.01: FL wheel speed sensor

Q: Is the check result normal?

YES : Go to Step 12.
NO : Go to Step 4.

www.cargeek.ir

www.CarGeek.ir

STEP 4. Voltage measurement at the A-58 ASC-ECU connector

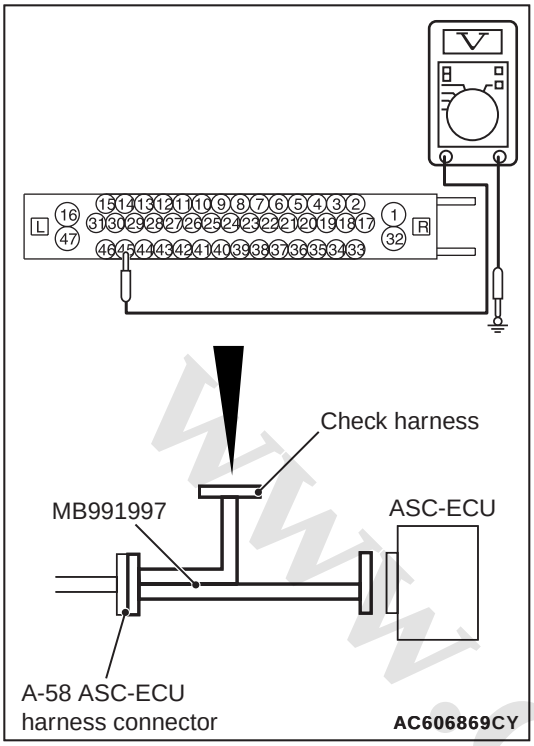

(1) Disconnect the ASC-ECU connector, connect special tool ASC check harness (MB991997) to the harness-side connector, and then measure the voltage at the special tool connector side.

NOTE: Do not connect the special tool to ASC-ECU.

(2) Turn the ignition switch to the ON position.

(3) Measure the voltage between the front wheel speed sensor (LH) power supply terminal (signal terminal) No.45 and the body earth and between the earth terminal No.46 and the body earth.

OK: 1 V or less

Q: Is the check result normal?

YES : Go to Step 5.

NO (Not normal at the terminal No.45 or 46) : Go to Step 6.

STEP 5. Resistance measurement at A-58 ASC-ECU connector

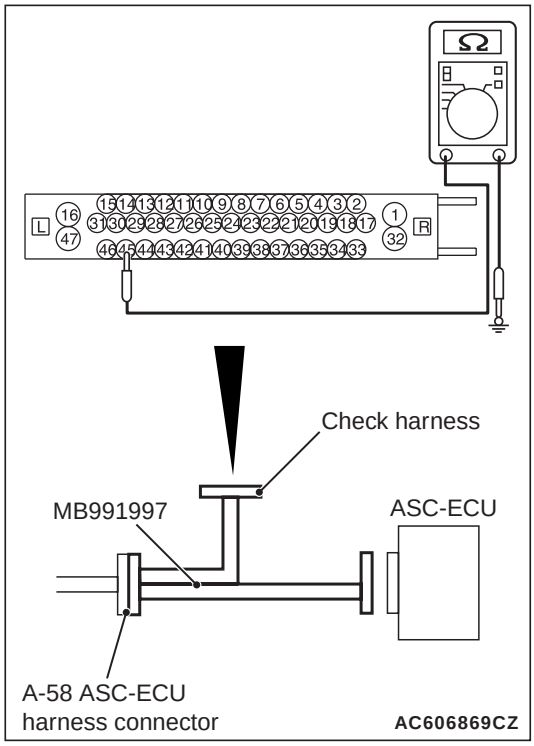

(1) Disconnect the ASC-ECU connector, connect special tool ASC check harness (MB991997) to the harness-side connector, and then measure the resistance at the special tool connector side.

NOTE: Do not connect the special tool to ASC-ECU.

(2) Measure the resistance between the front wheel speed sensor (LH) power supply terminal (signal terminal) No.45 and the body earth and between the front wheel speed sensor (LH) earth terminal No.46 and the body earth.

OK: No continuity

Q: Is the check result normal?

YES : Go to Step 8.

NO (Not normal at the terminal No.45 or 46) : Go to Step 6.

STEP 6. Connector check: A-58 ASC-ECU connector, A-08 front wheel speed sensor <LH> connector

Q: Is the check result normal?

YES : Go to Step 7.

NO : Repair the defective connector. Then go to Step 13.

www.cargeek.ir

www.CarGeek.ir

STEP 7. Wiring harness check between A-58 ASC-ECU connector terminal No.45 and A-08 front wheel speed sensor <LH> connector terminal No.1 and between A-58 ASC-ECU connector terminal No.46 and A-08 front wheel speed sensor <LH> connector terminal No.2.

- Check for short circuit in front wheel speed sensor <LH> circuit

Q: Is the check result normal?

YES : Replace the wheel speed sensor <FL> (Refer to P.35C-188). Then go to Step 13.

NO : Repair the wiring harness. Then go to Step 13.

STEP 8. Voltage measurement at the A-58 ASC-ECU connector

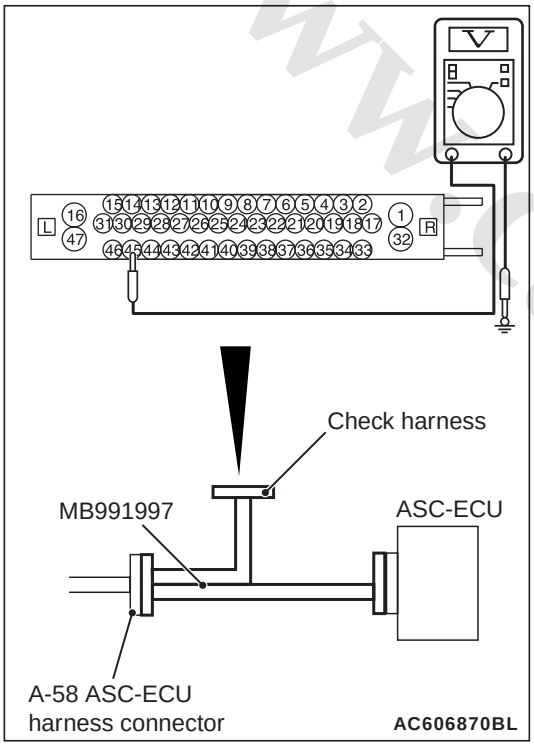

(1) Disconnect the ASC-ECU connector, connect special tool ASC check harness (MB991997) to the ASC-ECU-side connector and harness-side connector, and then measure the voltage at the special tool connector side.
(2) Turn the ignition switch to the ON position.
(3) Measure the voltage between the front wheel speed sensor (LH) circuit power supply terminal (signal terminal) No.45 and the body earth.

OK: Approximately system voltage

Q: Is the check result normal?

YES : Go to Step 9.

NO : Go to Step 11.

STEP 9. Wiring harness check between A-58 ASC-ECU connector terminal No.45 and A-08 front wheel speed sensor <LH> connector terminal No.1 and between A-58 ASC-ECU connector terminal No.46 and A-08 front wheel speed sensor <LH> connector terminal No.2.

- Check for open circuit in front wheel speed sensor <LH> circuit.

Q: Is the check result normal?

YES : Go to Step 10.

NO : Repair the wiring harness. Then go to Step 13.

STEP 10. Check for wheel speed sensor <FL> as a single unit

Refer to P.35C-188.

Q: Is the check result normal?

YES : Go to Step 11.

NO : Replace the wheel speed sensor <FL> (Refer to P.35C-188). Then go to Step 13.

STEP 11. Connector check: A-58 ASC-ECU connector, A-08 front wheel speed sensor <LH> connector

Q: Is the check result normal?

YES : Go to Step 12.

NO : Repair the defective connector. Then go to Step 13.

STEP 12. Check whether the diagnosis code is reset.

(1) Erase the diagnosis code.
(2) Drive the vehicle at 20 km/h or higher.

NOTE: The ABS warning lamp does not turn OFF in some cases unless the vehicle runs at 20 km/h or higher.

Q: Is diagnosis code No. C100A set?

YES : Replace the hydraulic unit (integrated with ASC-ECU) (Refer to P.35C-185). Then go to Step 13 .

NO : Intermittent malfunction (Refer to GROUP 00 – How to Cope with Intermittent Malfunctions).

STEP 13. Check whether the diagnosis code is reset.

(1) Erase the diagnosis code.
(2) Drive the vehicle at 20 km/h or higher.

NOTE: The ABS warning lamp does not turn OFF in some cases unless the vehicle runs at 20 km/h or higher.

www.cargeek.ir

www.CarGeek.ir

Q: Is diagnosis code No. C100A set?

YES : Return to Step 1.
NO : This diagnosis is complete.

Code No. C1015 Abnormality in FR wheel speed sensor circuit

Wheel Speed Sensor Circuit

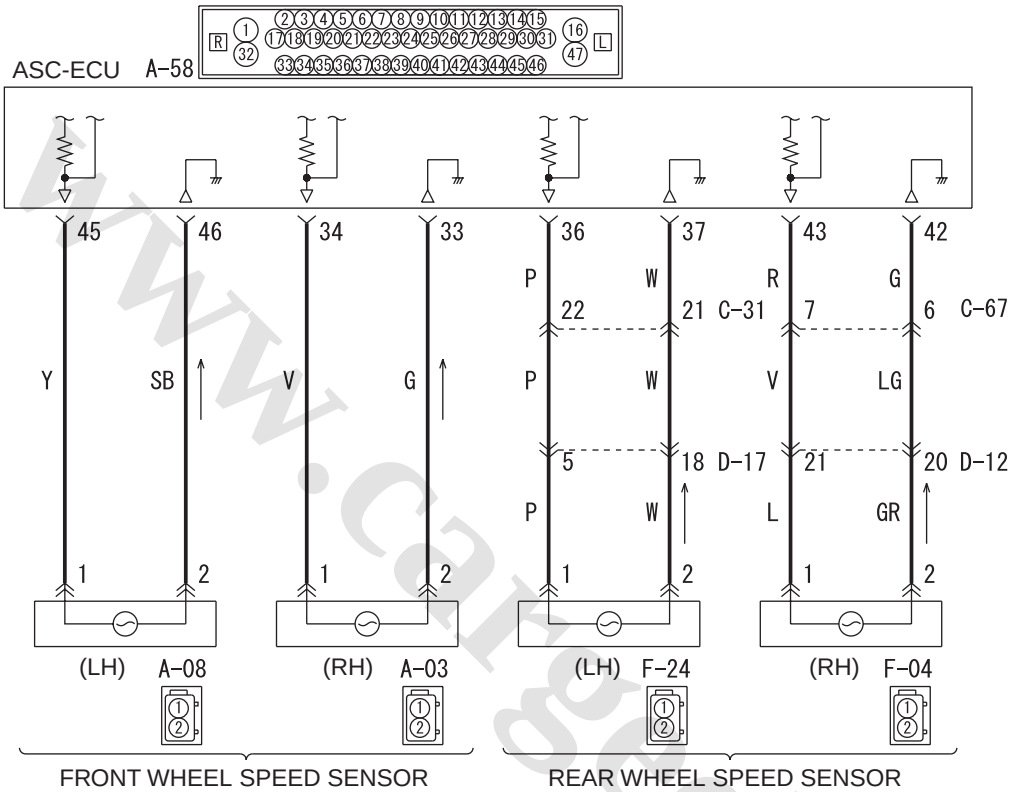

Wire colour code
B : Black LG : Light green G : Green L : Blue W : White Y : Yellow SB : Sky blue
BR : Brown O : Orange GR : Grey R : Red P : Pink V : Violet PU : Purple SI : Silver

ACB02565

Connectors: A-03, A-58 <LHD>

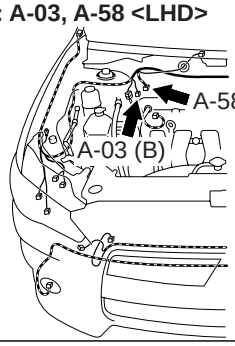

AC612691AP

Connector: A-03 <RHD>

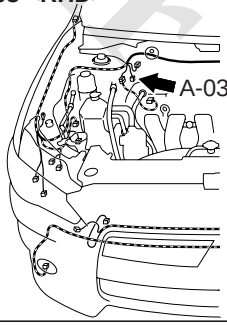

AC701237AE

www.cargeek.ir

www.CarGeek.ir

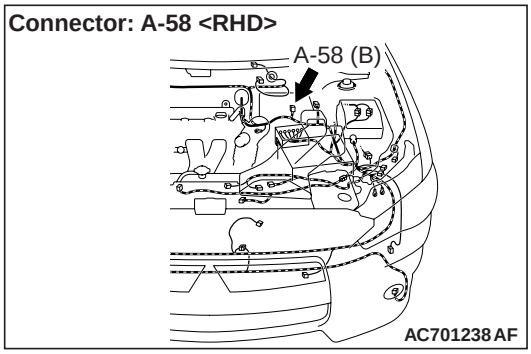

⚠ CAUTION

- **If there is any problem in the CAN bus lines, an incorrect diagnosis code may be set. Prior to this diagnosis, diagnose the CAN bus lines (Refer to GROUP 54C – CAN Bus Diagnostics Table).**
- **Whenever ECU is replaced, ensure that the CAN bus lines are normal.**
- **When the hydraulic unit (integrated with ASC-ECU) is replaced, always carry out the calibration of the steering wheel sensor, the G and yaw rate sensor and brake fluid pressure sensor (Refer to P.35C-182, P.35C-183 and P.35C-184).**

OPERATION

- The wheel speed sensor is a kind of a pulse generator. It consists of encoders (a plate on which north and south pole sides of the magnets are arranged alternately) for detecting the wheel speed which rotates at the same speed of the wheels and wheel speed sensors. This sensor outputs frequency pulse signals in proportion to the wheel speed.
- The pulse signals, which the wheel speed sensor creates, are sent to ASC-ECU. ASC-ECU uses the frequency of the pulse signals to determine the wheel speed.

DIAGNOSIS CODE SET CONDITIONS

ASC-ECU monitors the voltage fluctuation in each wheel speed sensor circuit. If ASC-ECU detects the open or short circuit in the circuit, it will set a diagnosis code.

PROBABLE CAUSES

Current trouble

- Damaged wiring harness and connectors
- Noise interference
- Malfunction of wheel speed sensor
- Malfunction of ASC-ECU

Past trouble

- Carry out diagnosis with particular emphasis on wiring harness and connector failures between ASC-ECU and the wheel speed sensor. For diagnosis procedures, refer to How to treat past trouble (GROUP 00 – How to Use Troubleshooting/ How to Treat Past Trouble).

DIAGNOSTIC PROCEDURE

STEP 1. M.U.T.-III CAN bus diagnostics

Use M.U.T.-III to diagnose the CAN bus lines.

Q: Is the check result normal?

YES : Go to Step 3.
NO : Repair the CAN bus lines (Refer to GROUP 54C – CAN Bus Diagnostics Table). On completion, go to Step 2.

STEP 2. Diagnosis code recheck after resetting CAN bus lines

Q: Is diagnosis code No. C1015 set?

YES : Go to Step 3.
NO : This diagnosis is complete.

STEP 3. M.U.T.-III data list

Check the following data list (Refer to P.35C-172).

- Item No.02: FR wheel speed sensor

Q: Is the check result normal?

YES : Go to Step 12.
NO : Go to Step 4.

www.cargeek.ir

www.CarGeek.ir

STEP 4. Voltage measurement at the A-58 ASC-ECU connector

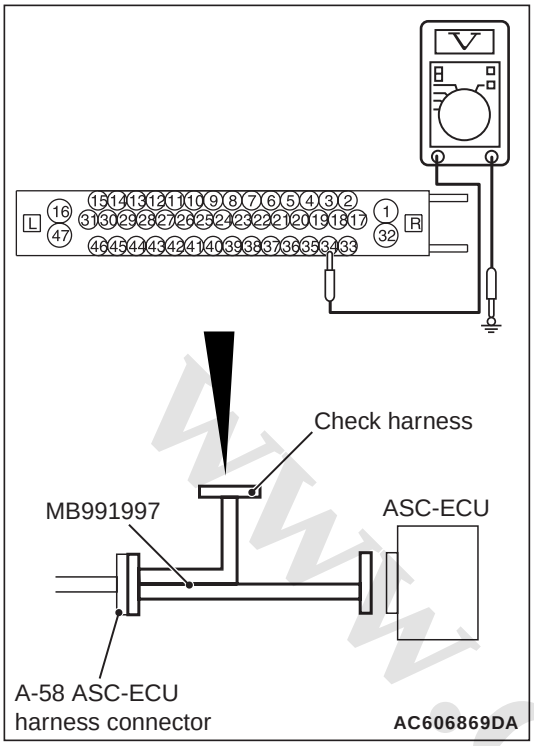

(1) Disconnect the ASC-ECU connector, connect special tool ASC check harness (MB991997) to the harness-side connector, and then measure the voltage at the special tool connector side.

NOTE: Do not connect the special tool to ASC-ECU.

(2) Turn the ignition switch to the ON position.

(3) Measure the voltage between the front wheel speed sensor <RH> power supply terminal (signal terminal) No.34 and the body earth and between the earth terminal No.33 and the body earth.

OK: 1 V or less

Q: Is the check result normal?

YES : Go to Step 5.

NO (Not normal at the terminal No.34 or 33) : Go to Step 6.

STEP 5. Resistance measurement at A-58 ASC-ECU connector

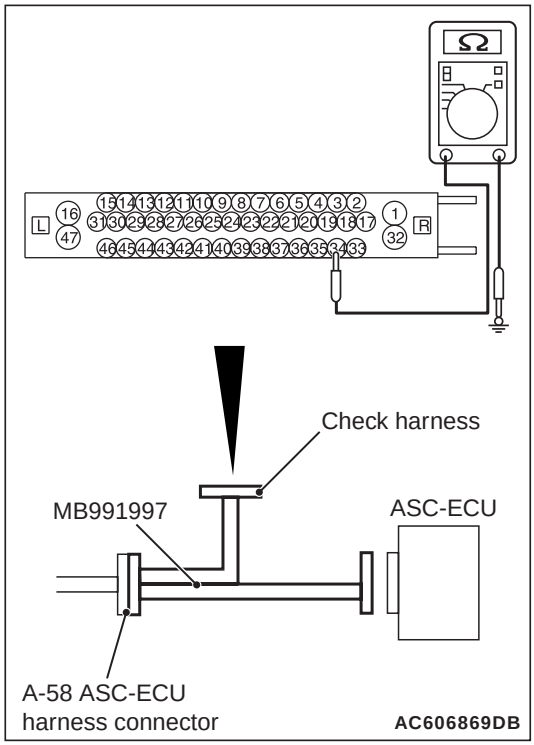

(1) Disconnect the ASC-ECU connector, connect special tool ASC check harness (MB991997) to the harness-side connector, and then measure the resistance at the special tool connector side.

NOTE: Do not connect the special tool to ASC-ECU.

(2) Measure the resistance between the front wheel speed sensor <RH> power supply terminal (signal terminal) No.34 and the body earth and between the front wheel speed sensor <RH> earth terminal No.33 and the body earth.

OK: No continuity

Q: Is the check result normal?

YES : Go to Step 8.

NO (Not normal at the terminal No.34 or 33) : Go to Step 6.

STEP 6. Connector check: A-58 ASC-ECU connector, A-03 front wheel speed sensor <RH> connector

Q: Is the check result normal?

YES : Go to Step 7.

NO : Repair the defective connector.

www.cargeek.ir

www.CarGeek.ir

STEP 7. Wiring harness check between A-58 ASC-ECU connector terminal No.34 and A-03 front wheel speed sensor <RH> connector terminal No.1 and between A-58 ASC-ECU connector terminal No.33 and A-03 front wheel speed sensor <RH> connector terminal No.2.

- Check for short circuit in front wheel speed sensor <RH> circuit

Q: Is the check result normal?

YES : Replace the wheel speed sensor <FR> (Refer to P.35C-188). Then go to Step 13.

NO : Repair the wiring harness. Then go to Step 13.

STEP 8. Voltage measurement at the A-58 ASC-ECU connector

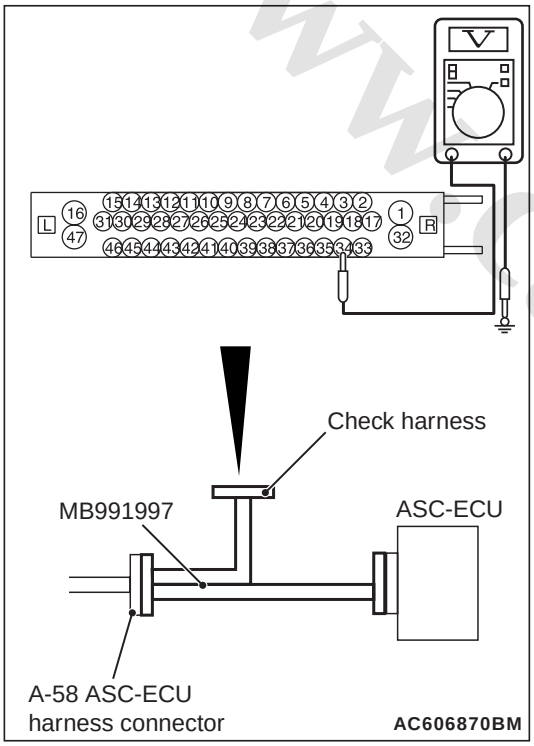

(1) Disconnect the ASC-ECU connector, connect special tool ASC check harness (MB991997) to the ASC-ECU-side connector and harness-side connector, and then measure the voltage at the special tool connector side.
(2) Turn the ignition switch to the ON position.
(3) Measure the voltage between the front wheel speed sensor <RH> circuit power supply terminal (signal terminal) No.34 and the body earth.

OK: Approximately system voltage

Q: Is the check result normal?

YES : Go to Step 9.

NO : Go to Step 11.

STEP 9. Wiring harness check between A-58 ASC-ECU connector terminal No.34 and A-03 front wheel speed sensor <RH> connector terminal No.1 and between A-58 ASC-ECU connector terminal No.33 and A-03 front wheel speed sensor <RH> connector terminal No.2.

- Check for the open circuit in front wheel speed sensor <RH> circuit.

Q: Is the check result normal?

YES : Go to Step 10.

NO : Repair the wiring harness. Then go to Step 13.

STEP 10. Check for wheel speed sensor <FR> as a single unit

Refer to P.35C-188.

Q: Is the check result normal?

YES : Go to Step 11.

NO : Replace the wheel speed sensor <FR> (Refer to P.35C-188). Then go to Step 13.

STEP 11. Connector check: A-58 ASC-ECU connector, A-03 front wheel speed sensor <RH> connector

Q: Is the check result normal?

YES : Go to Step 12.

NO : Repair the defective connector. Then go to Step 13.

STEP 12. Check whether the diagnosis code is reset.

(1) Erase the diagnosis code.
(2) Drive the vehicle at 20 km/h or higher.

NOTE: The ABS warning lamp does not turn OFF in some cases unless the vehicle runs at 20 km/h or higher.

Q: Is diagnosis code No. C1015 set?

YES : Replace the hydraulic unit (integrated with ASC-ECU) (Refer to P.35C-185). Then go to Step 13.

NO : Intermittent malfunction (Refer to GROUP 00 – How to Use Troubleshooting/How to Cope with Intermittent Malfunctions).

STEP 13. Check whether the diagnosis code is reset.

(1) Erase the diagnosis code.
(2) Drive the vehicle at 20 km/h or higher.

NOTE: The ABS warning lamp does not turn OFF in some cases unless the vehicle runs at 20 km/h or higher.

www.cargeek.ir

www.CarGeek.ir

Q: Is diagnosis code No. C1015 set?

YES : Return to Step 1.
NO : This diagnosis is complete.

Code No. C1020 Abnormality in RL wheel speed sensor circuit

Wheel Speed Sensor Circuit

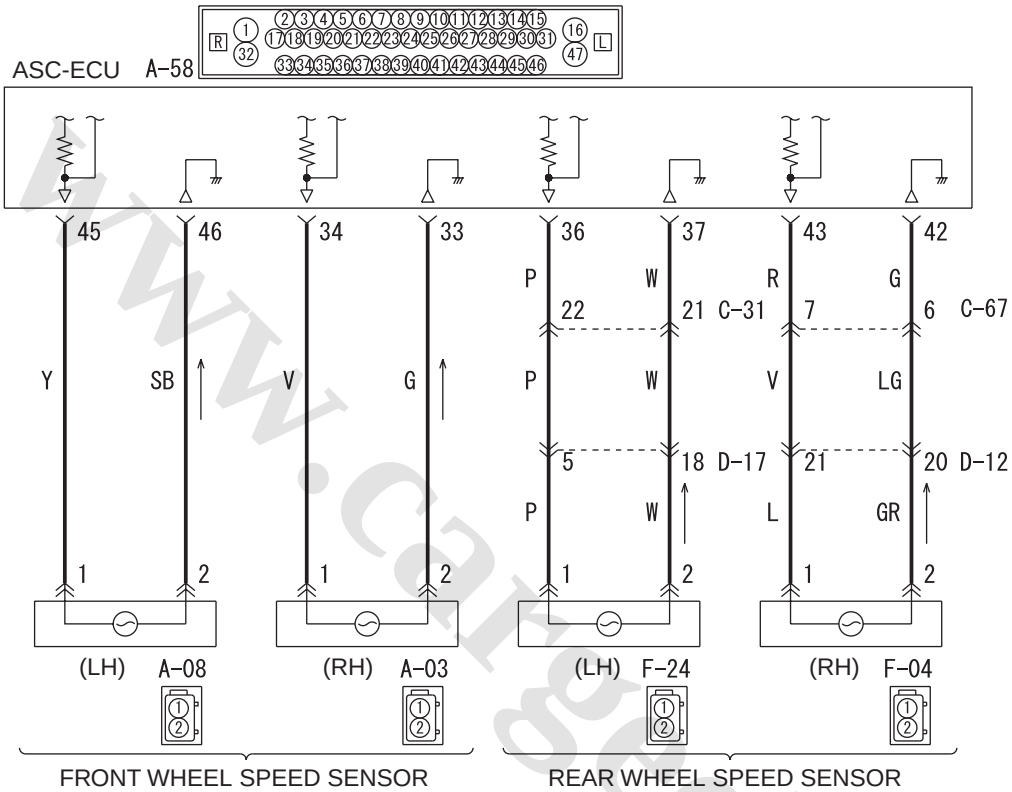

Wire colour code
B : Black LG : Light green G : Green L : Blue W : White Y : Yellow SB : Sky blue
BR : Brown O : Orange GR : Grey R : Red P : Pink V : Violet PU : Purple SI : Silver

ACB02565

Connector: A-58 <LHD>

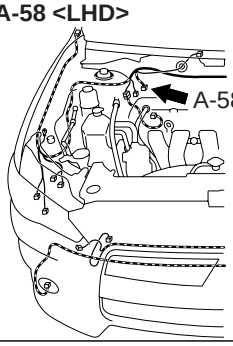

AC612691AO

Connector: A-58 <RHD>

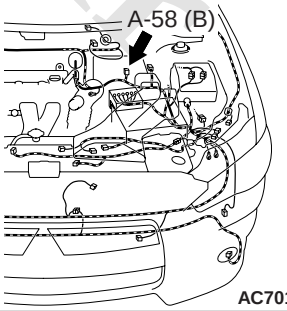

AC701238AF

www.cargeek.ir

www.CarGeek.ir

Connector: C-31 <LHD>

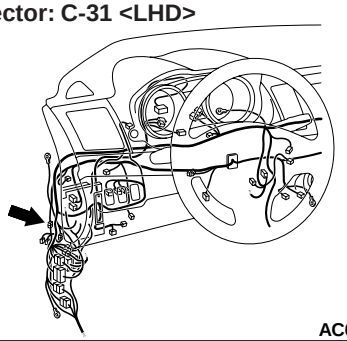

AC612705AF

Connector: C-31 <RHD>

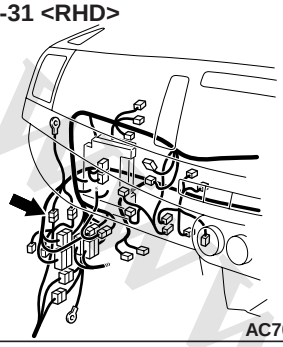

AC701121AM

Connector: D-17

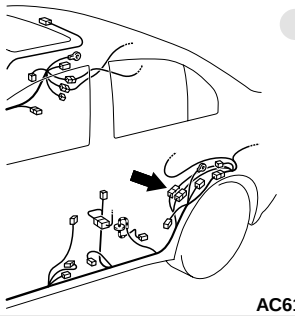

AC612723AU

Connector: F-24 <LANCER>

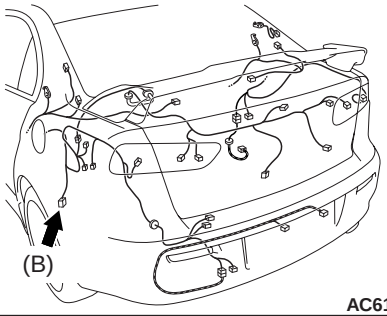

AC612744BH

Connector: F-24 <LANCER SPORTBACK>

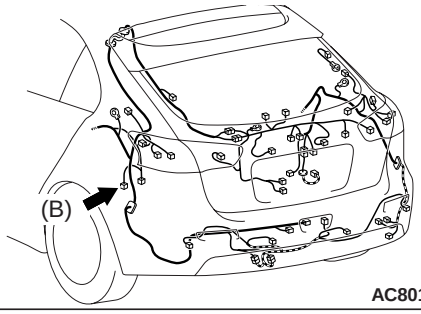

AC801775BM

⚠ CAUTION

- **If there is any problem in the CAN bus lines, an incorrect diagnosis code may be set. Prior to this diagnosis, diagnose the CAN bus lines (Refer to GROUP 54C – CAN Bus Diagnostics Table).**
- **Whenever ECU is replaced, ensure that the CAN bus lines are normal.**
- **When the hydraulic unit (integrated with ASC-ECU) is replaced, always carry out the calibration of the steering wheel sensor, the G and yaw rate sensor and brake fluid pressure sensor (Refer to P.35C-182, P.35C-183 and P.35C-184).**

OPERATION

- The wheel speed sensor is a kind of a pulse generator. It consists of encoders (a plate on which north and south pole sides of the magnets are arranged alternately) for detecting the wheel speed which rotates at the same speed of the wheels and wheel speed sensors. This sensor outputs frequency pulse signals in proportion to the wheel speed.
- The pulse signals, which the wheel speed sensor creates, are sent to ASC-ECU. ASC-ECU uses the frequency of the pulse signals to determine the wheel speed.

DIAGNOSIS CODE SET CONDITIONS

ASC-ECU monitors the voltage fluctuation in each wheel speed sensor circuit. If ASC-ECU detects the open or short circuit in the circuit, it will set a diagnosis code.

PROBABLE CAUSES

Current trouble

- Damaged wiring harness and connectors
- Noise interference
- Malfunction of wheel speed sensor
- Malfunction of ASC-ECU

Past trouble

- Carry out diagnosis with particular emphasis on wiring harness and connector failures between ASC-ECU and the wheel speed sensor. For diagnosis procedures, refer to How to treat past trouble (GROUP 00 – How to Use Troubleshooting/ How to Treat Past Trouble).

www.cargeek.ir

www.CarGeek.ir

DIAGNOSTIC PROCEDURE

STEP 1. M.U.T.-III CAN bus diagnosis

Use M.U.T.-III to diagnose the CAN bus lines.

Q: Is the check result normal?

YES : Go to Step 3.

NO : Repair the CAN bus lines (Refer to GROUP 54C – CAN Bus Diagnostics Table). On completion, go to Step 2.

STEP 2. Diagnosis code recheck after resetting CAN bus lines

Q: Is the diagnosis code No. C1020 set?

YES : Go to Step 3.

NO : This diagnosis is complete.

STEP 3. M.U.T.-III data list

Check the following data list (Refer to P.35C-172).

- Item No.03: RL wheel speed sensor

Q: Is the check result normal?

YES : Go to Step 12.

NO : Go to Step 4.

STEP 4. Voltage measurement at the A-58 ASC-ECU connector

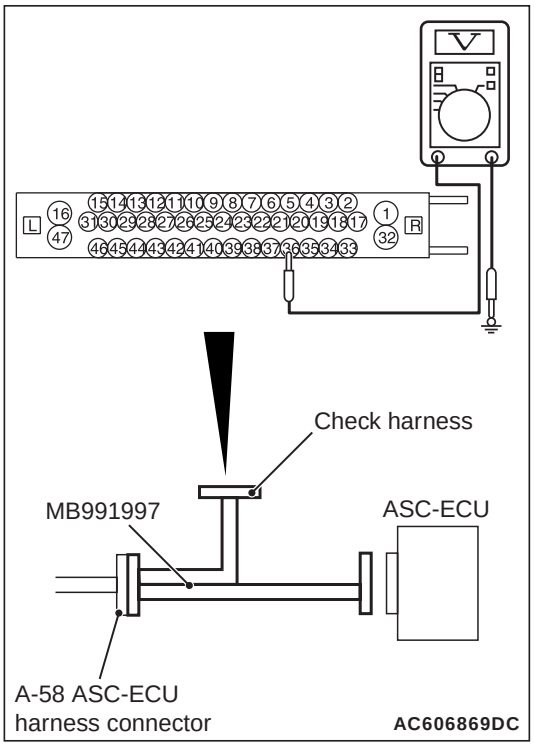

(1) Disconnect the ASC-ECU connector, connect special tool ASC check harness (MB991997) to the harness-side connector, and then measure the voltage at the special tool connector side.

NOTE: Do not connect the special tool to ASC-ECU.

(2) Turn the ignition switch to the ON position.

(3) Measure the voltage between the rear wheel speed sensor <LH> power supply terminal (signal terminal) No.36 and the body earth, and between the rear wheel speed sensor <LH> earth terminal No.37 and the body earth.

OK: 1 V or less

Q: Is the check result normal?

YES : Go to Step 5.

NO (Not normal at the terminal No.36 or No.37) : Go to Step 6.

STEP 5. Resistance measurement at A-58 ASC-ECU connector

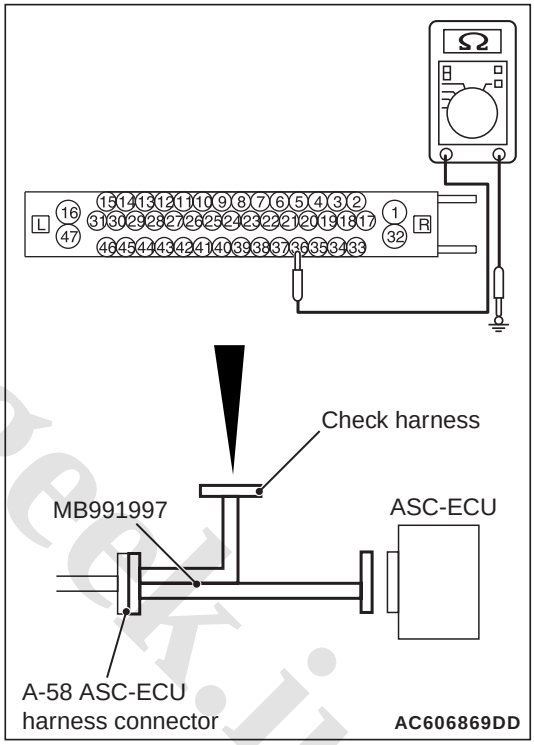

(1) Disconnect the ASC-ECU connector, connect special tool ASC check harness (MB991997) to the harness-side connector, and then measure the resistance at the special tool connector side.

NOTE: Do not connect the special tool to ASC-ECU.

(2) Measure the resistance between the rear wheel speed sensor <LH> earth terminal No.36 and the body earth, and between the rear wheel speed sensor <LH> earth terminal No.37 and the body earth.

OK: No continuity

Q: Is the check result normal?

www.cargeek.ir

www.CarGeek.ir

YES : Go to Step 8.
NO (Not normal at the terminal No.36 or No.37) : Go to Step 6.

STEP 6. Connector check: A-58 ASC-ECU connector, C-31 intermediate connector, D-17 intermediate connector, F-24 rear wheel speed sensor <LH> connector

Q: Is the check result normal?
YES : Go to Step 7.
NO : Repair the defective connector. Then go to Step 13.

STEP 7. Wiring harness check between A-58 ASC-ECU connector terminal No.36 and F-24 rear wheel speed sensor <LH> connector terminal No.1, and between A-58 ASC-ECU connector terminal No.37 and F-24 rear wheel speed sensor <LH> connector terminal No.2.

- Check for short circuit in rear wheel speed sensor <LH> circuit

Q: Is the check result normal?
YES : Replace the wheel speed sensor <RL> (Refer to P.35C-188). Then go to Step 13.
NO : Repair the wiring harness. Then go to Step 13.

STEP 8. Voltage measurement at the A-58 ASC-ECU connector

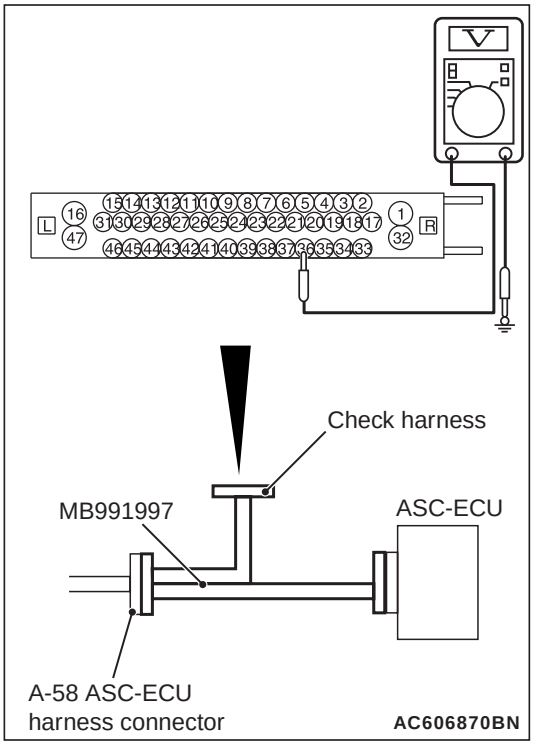

(1) Disconnect the ASC-ECU connector, connect special tool ASC check harness (MB991997) to the ASC-ECU-side connector and harness-side connector, and then measure the voltage at the special tool connector side.
(2) Turn the ignition switch to the ON position.
(3) Measure the voltage between the rear wheel speed sensor <LH> circuit power supply terminal (signal terminal) No.36 and the body earth.

OK: Approximately system voltage

Q: Is the check result normal?
YES : Go to Step 9.
NO : Go to Step 11.

STEP 9. Wiring harness check between A-58 ASC-ECU connector terminal No.36 and F-24 rear wheel speed sensor <LH> connector terminal No.1, and between A-58 ASC-ECU connector terminal No.37 and F-24 rear wheel speed sensor <LH> connector terminal No.2.

- Check for open circuit in rear wheel speed sensor <LH> circuit

Q: Is the check result normal?
YES : Go to Step 10.
NO : Repair the wiring harness. Then go to Step 13.

STEP 10. Check for wheel speed sensor <RL> as a single unit
Refer to P.35C-188.

Q: Is the check result normal?
YES : Go to Step 11.
NO : Replace the wheel speed sensor <RL> (Refer to P.35C-188). Then go to Step 13.

STEP 11. Connector check: A-58 ASC-ECU connector, C-31 intermediate connector, D-17 intermediate connector, F-24 rear wheel speed sensor <LH> connector

Q: Is the check result normal?
YES : Go to Step 12.
NO : Repair the defective connector. Then go to Step 13.

STEP 12. Check whether the diagnosis code is reset.
(1) Erase the diagnosis code.
(2) Drive the vehicle at 20 km/h or higher.

NOTE: The ABS warning lamp does not turn OFF in some cases unless the vehicle runs at 20 km/h or higher.

Q: Is the diagnosis code No. C1020 set?

www.cargeek.ir

www.CarGeek.ir

YES : Replace the hydraulic unit (integrated with ASC-ECU) (Refer to P.35C-185). Then go to Step 13.
NO : Intermittent malfunction (Refer to GROUP 00 – How to Use Troubleshooting/How to Cope with Intermittent Malfunctions).

STEP 13. Check whether the diagnosis code is reset.
(1) Erase the diagnosis code.
(2) Drive the vehicle at 20 km/h or higher.
NOTE: The ABS warning lamp does not turn OFF in some cases unless the vehicle runs at 20 km/h or higher.

Q: Is the diagnosis code No. C1020 set?
YES : Return to Step 1.
NO : This diagnosis is complete.

Code No. C102B Abnormality in RR wheel speed sensor circuit

Wheel Speed Sensor Circuit

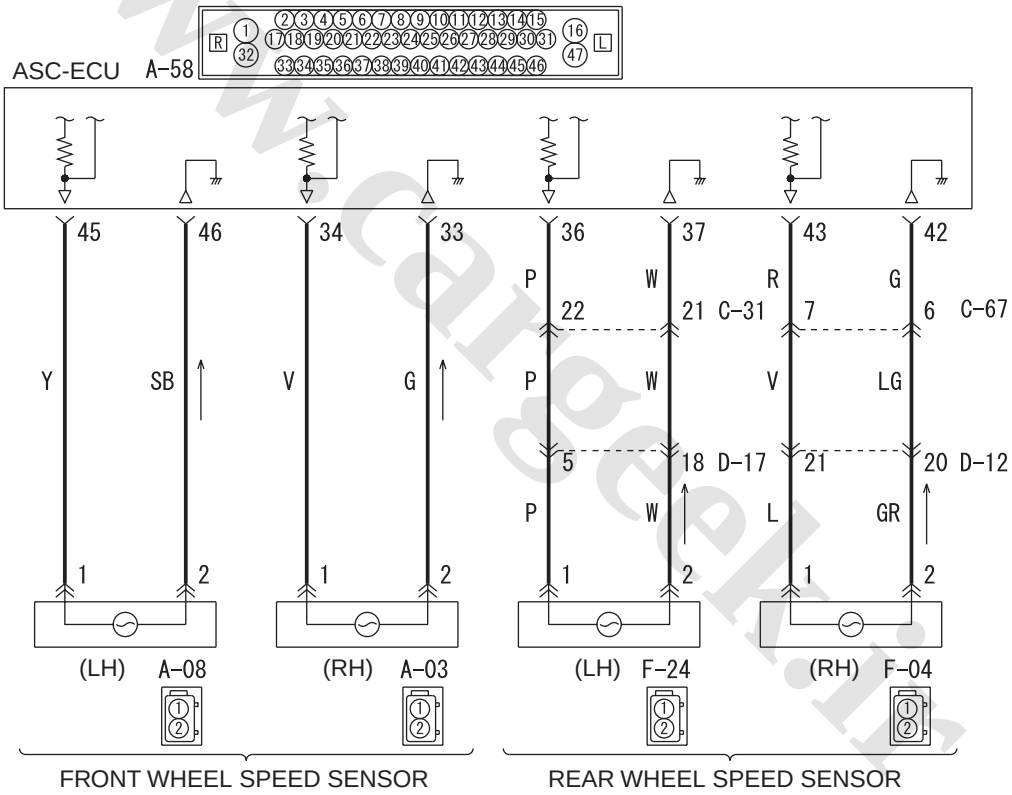

Wire colour code
B : Black LG : Light green G : Green L : Blue W : White Y : Yellow SB : Sky blue
BR : Brown O : Orange GR : Grey R : Red P : Pink V : Violet PU : Purple SI : Silver

ACB02565

www.cargeek.ir

www.CarGeek.ir

Connector: A-58 <LHD>

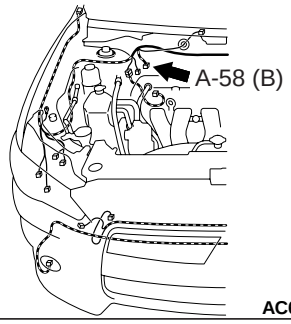

Connector: A-58 <RHD>

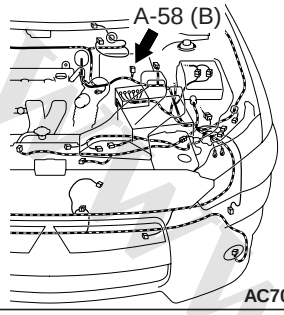

Connector: C-67 <LHD>

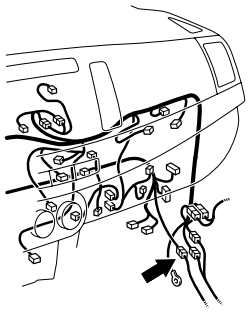

Connector: C-67 <RHD>

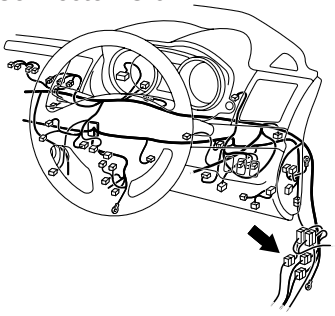

Connector: D-12

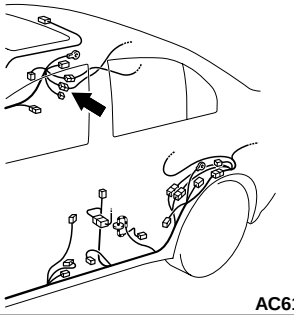

Connector: F-04 <LANCER>

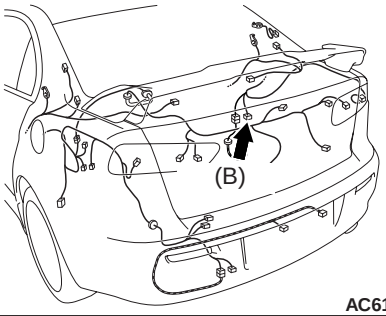

Connector: F-04 <LANCER SPORTBACK>

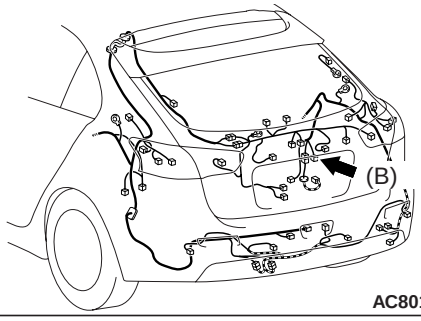

⚠ CAUTION

- **If there is any problem in the CAN bus lines, an incorrect diagnosis code may be set. Prior to this diagnosis, diagnose the CAN bus lines (Refer to GROUP 54C – CAN Bus Diagnostics Table).**
- **Whenever ECU is replaced, ensure that the CAN bus lines are normal.**
- **When the hydraulic unit (integrated with ASC-ECU) is replaced, always carry out the calibration of the steering wheel sensor, the G and yaw rate sensor and brake fluid pressure sensor (Refer to P.35C-182, P.35C-183 and P.35C-184).**

OPERATION

- The wheel speed sensor is a kind of a pulse generator. It consists of encoders (a plate on which north and south pole sides of the magnets are arranged alternately) for detecting the wheel speed which rotates at the same speed of the wheels and wheel speed sensors. This sensor outputs frequency pulse signals in proportion to the wheel speed.
- The pulse signals, which the wheel speed sensor creates, are sent to ASC-ECU. ASC-ECU uses the frequency of the pulse signals to determine the wheel speed.

www.cargeek.ir

www.CarGeek.ir

DIAGNOSIS CODE SET CONDITIONS

ASC-ECU monitors the voltage fluctuation in each wheel speed sensor circuit. If ASC-ECU detects the open or short circuit in the circuit, it will set a diagnosis code.

PROBABLE CAUSES

Current trouble

- Damaged wiring harness and connectors
- Noise interference
- Malfunction of wheel speed sensor
- Malfunction of ASC-ECU

Past trouble

- Carry out diagnosis with particular emphasis on wiring harness and connector failures between ASC-ECU and the wheel speed sensor. For diagnosis procedures, refer to How to treat past trouble (GROUP 00 – How to Use Troubleshooting/ How to Treat Past Trouble).

DIAGNOSTIC PROCEDURE

STEP 1. M.U.T.-III CAN bus diagnosis

Use M.U.T.-III to diagnose the CAN bus lines.

Q: Is the check result normal?

YES : Go to Step 3.

NO : Repair the CAN bus lines (Refer to GROUP 54C – CAN Bus Diagnostics Table). On completion, go to Step 2.

STEP 2. Diagnosis code recheck after resetting CAN bus lines

Q: Is the diagnosis code No. C102B set?

YES : Go to Step 3.

NO : This diagnosis is complete.

STEP 3. M.U.T.-III data list

Check the following data list (Refer to P.35C-172).

- Item No.04: RR wheel speed sensor

Q: Is the check result normal?

YES : Go to Step 12.

NO : Go to Step 4.

STEP 4. Voltage measurement at the A-58 ASC-ECU connector

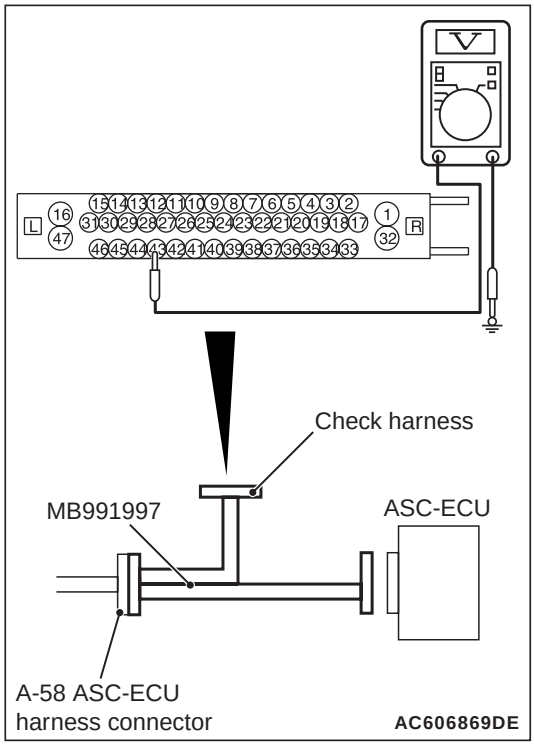

(1) Disconnect the ASC-ECU connector, connect special tool ASC check harness (MB991997) to the harness-side connector, and then measure the voltage at the special tool connector side.

NOTE: Do not connect the special tool to ASC-ECU.

(2) Turn the ignition switch to the ON position.

(3) Measure the voltage between the rear wheel speed sensor <RH> power supply terminal (signal terminal) No.43 and the body earth, and between the rear wheel speed sensor <RH> earth terminal No.42 and the body earth.

OK: 1 V or less

Q: Is the check result normal?

YES : Go to Step 5.

NO (Not normal at the terminal No.43 or No.42) : Go to Step 6.

www.cargeek.ir

www.CarGeek.ir

STEP 5. Resistance measurement at A-58 ASC-ECU connector

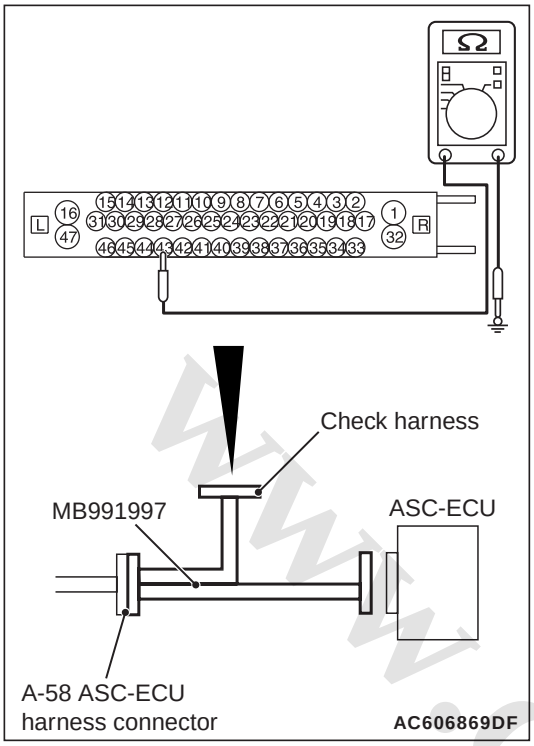

(1) Disconnect the ASC-ECU connector, connect special tool ASC check harness (MB991997) to the harness-side connector, and then measure the resistance at the special tool connector side.

NOTE: Do not connect the special tool to ASC-ECU.

(2) Measure the resistance between the rear wheel speed sensor <RH> power supply terminal (signal terminal) No.43 and the body earth, and between the rear wheel speed sensor <RH> earth terminal No.42 and the body earth.

OK: No continuity

Q: Is the check result normal?
YES : Go to Step 8.
NO (Not normal at the terminal No.43 or No.42) : Go to Step 6.

STEP 6. Connector check: A-58 ASC-ECU connector, C-67 intermediate connector, D-12 intermediate connector, F-04 rear wheel speed sensor <RH> connector

Q: Is the check result normal?
YES : Go to Step 7.
NO : Repair the defective connector. Then go to Step 13.

STEP 7. Wiring harness check between A-58 ASC-ECU connector terminal No.43 and F-04 rear wheel speed sensor <RH> connector terminal No.1, and between A-58 ASC-ECU connector terminal No.42 and F-04 rear wheel speed sensor <RH> connector terminal No.2.

- Check for short circuit in rear wheel speed sensor <RH> circuit

Q: Is the check result normal?
YES : Replace the wheel speed sensor <RR> (Refer to P.35C-188). Then go to Step 13.
NO : Repair the wiring harness. Then go to Step 13.

STEP 8. Voltage measurement at the A-58 ASC-ECU connector

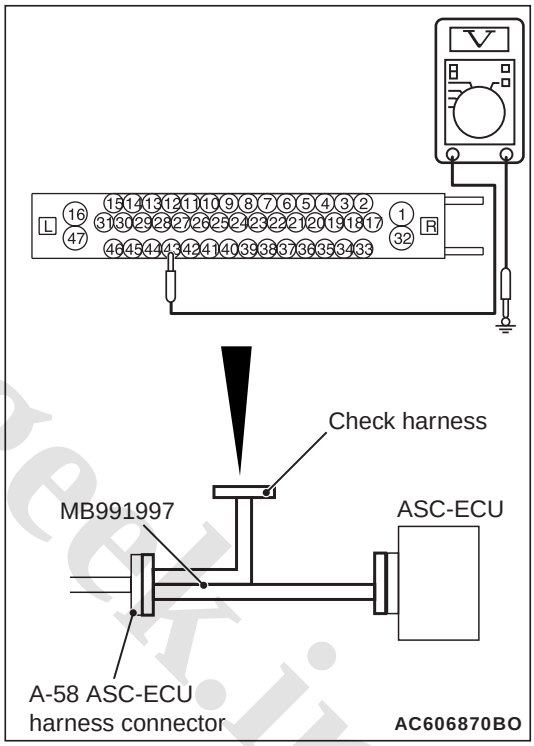

(1) Disconnect the ASC-ECU connector, connect special tool ASC check harness (MB991997) to the ASC-ECU-side connector and harness-side connector, and then measure the voltage at the special tool connector side.
(2) Turn the ignition switch to the ON position.
(3) Measure the voltage between the rear wheel speed sensor <RH> circuit power supply terminal (signal terminal) No.43 and the body earth.

OK: Approximately system voltage

Q: Is the check result normal?
YES : Go to Step 9.
NO : Go to Step 11.

www.cargeek.ir

www.CarGeek.ir

STEP 9. Wiring harness check between A-58 ASC-ECU connector terminal No.43 and F-04 rear wheel speed sensor <RH> connector terminal No.1, and between A-58 ASC-ECU connector terminal No.42 and F-04 rear wheel speed sensor <RH> connector terminal No.2.

- Check for open circuit in rear wheel speed sensor <RH> circuit

Q: Is the check result normal?

YES : Go to Step 10.

NO : Repair the wiring harness. Then go to Step 13.

STEP 10. Check for wheel speed sensor <RR> as a single unit

Refer to P.35C-188.

Q: Is the check result normal?

YES : Go to Step 11.

NO : Replace the wheel speed sensor <RR> (Refer to P.35C-188). Then go to Step 13.

STEP 11. Connector check: A-58 ASC-ECU connector, C-67 intermediate connector, D-12 intermediate connector, F-04 rear wheel speed sensor <RH> connector

Q: Is the check result normal?

YES : Go to Step 12.

NO : Repair the defective connector. Then go to Step 13.

STEP 12. Check whether the diagnosis code is reset.

(1) Erase the diagnosis code.

(2) Drive the vehicle at 20 km/h or higher.

NOTE: The ABS warning lamp does not turn OFF in some cases unless the vehicle runs at 20 km/h or higher.

Q: Is the diagnosis code No. C102B set?

YES : Replace the hydraulic unit (integrated with ASC-ECU) (Refer to P.35C-185). Then go to Step 13.

NO : Intermittent malfunction (Refer to GROUP 00 – How to Use Troubleshooting/How to Cope with Intermittent Malfunctions).

STEP 13. Check whether the diagnosis code is reset.

(1) Erase the diagnosis code.

(2) Drive the vehicle at 20 km/h or higher.

NOTE: The ABS warning lamp does not turn OFF in some cases unless the vehicle runs at 20 km/h or higher.

Q: Is the diagnosis code No. C102B set?

YES : Return to Step 1.

NO : This diagnosis is complete.

www.cargeek.ir

www.CarGeek.ir

Code No. C1011 Abnormality in FL wheel speed sensor signal

Wheel Speed Sensor Circuit

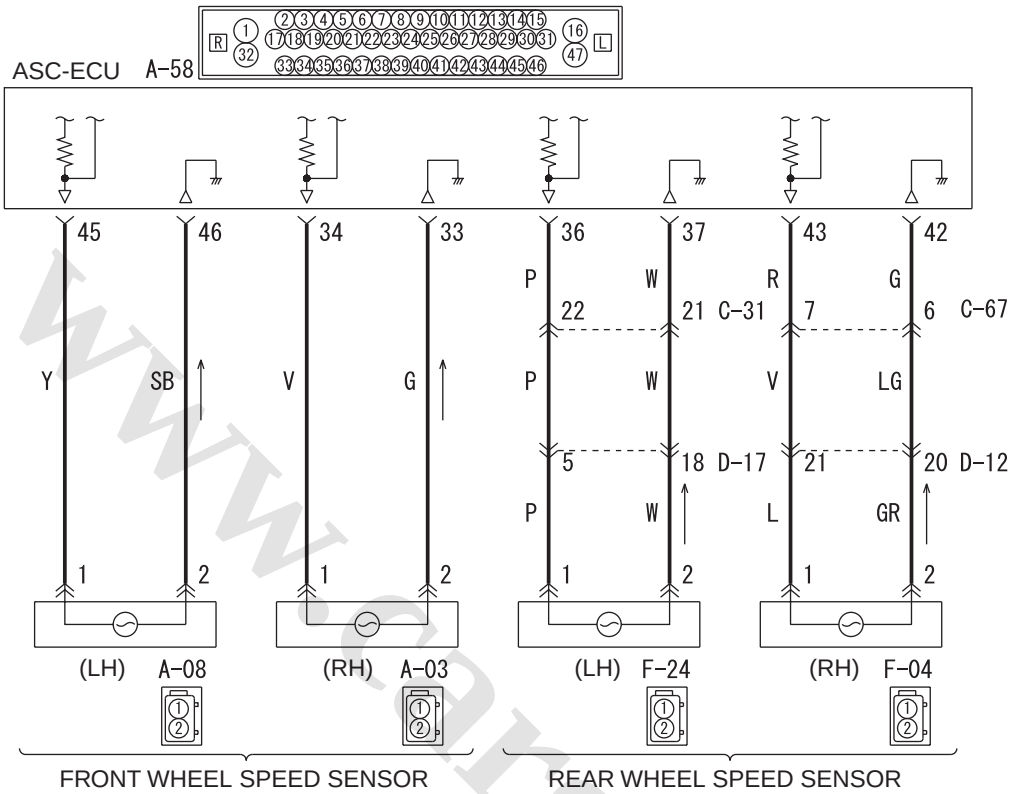

Wire colour code
B : Black LG : Light green G : Green L : Blue W : White Y : Yellow SB : Sky blue
BR : Brown O : Orange GR : Grey R : Red P : Pink V : Violet PU : Purple SI : Silver

ACB02565

Connector: A-08 <LHD>

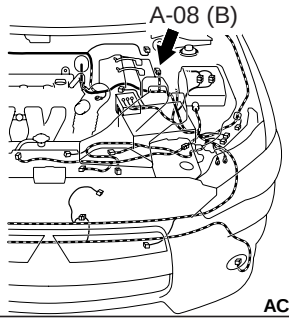

AC612690AP

Connectors: A-08, A-58 <RHD>

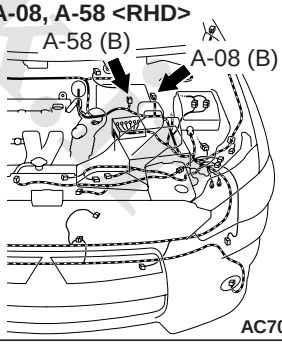

AC701238AE

www.cargeek.ir

www.CarGeek.ir

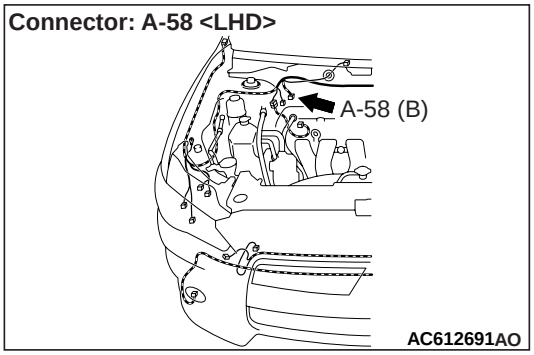

⚠ CAUTION

- **If there is any problem in the CAN bus lines, an incorrect diagnosis code may be set. Prior to this diagnosis, diagnose the CAN bus lines (Refer to GROUP 54C – CAN Bus Diagnostics Table).**
- **Whenever ECU is replaced, ensure that the CAN bus lines are normal.**
- **When the hydraulic unit (integrated with ASC-ECU) is replaced, always carry out the calibration of the steering wheel sensor, the G and yaw rate sensor and brake fluid pressure sensor (Refer to P.35C-182, P.35C-183 and P.35C-184).**

OPERATION

- The wheel speed sensor is a kind of a pulse generator. It consists of encoders (a plate on which north and south pole sides of the magnets are arranged alternately) for detecting the wheel speed which rotates at the same speed of the wheels and wheel speed sensors. This sensor outputs frequency pulse signals in proportion to the wheel speed.
- The pulse signals, which the wheel speed sensor creates, are sent to ASC-ECU. ASC-ECU uses the frequency of the pulse signals to determine the wheel speed.

DIAGNOSIS CODE SET CONDITIONS

ASC-ECU monitors the signals from each wheel speed sensor while the vehicle is being driven. If any fault below is found in these sensor signals, ASC-ECU will set the relevant diagnosis code.

- Irregular change in the wheel speed sensor signal
- Wheel speed sensor signal continuously indicates high value.

PROBABLE CAUSES

Current trouble

- Excessive gap between the wheel speed sensor and the wheel speed detection encoder
- Adhesion of foreign materials on the wheel speed sensor
- Adhesion of foreign materials on the wheel speed detection encoder
- Wheel bearing malfunction
- Malfunction of wheel speed sensor
- Damaged wiring harness and connectors
- External noise interference
- Improper installation of the wheel speed sensor
- Deformation of the wheel speed detection encoder
- ASC-ECU malfunction
- Disturbance of magnetisation pattern for wheel speed detection encoder
- The number of poles on the Magnetic encoder for wheel speed detection (N-pole and S-pole) is changed

Past trouble

- When diagnosis code No.C100A is also set, carry out diagnosis with particular emphasis on wiring harness and connector failures between ASC-ECU and the wheel speed sensor. For diagnosis procedures, refer to How to treat past trouble (GROUP 00 – How to Use Troubleshooting/How to Treat Past Trouble).
- When diagnosis code No.C100A is not set, the following conditions may be present:
  - Some wheels slip
  - Unstable vehicle attitude
  - External noise interference
  - Vehicle ran with the parking brake applied

DIAGNOSTIC PROCEDURE

STEP 1. M.U.T.-III CAN bus diagnosis

Use M.U.T.-III to diagnose the CAN bus lines.

Q: Is the check result normal?

YES : Go to Step 3.

NO : Repair the CAN bus lines (Refer to GROUP 54C – CAN Bus Diagnostics Table). On completion, go to Step 2.

STEP 2. Diagnosis code recheck after resetting CAN bus lines

Q: Is the diagnosis code No.C1011 set?

YES : Go to Step 3.

NO : This diagnosis is complete.

STEP 3. M.U.T.-III diagnosis code

Check that diagnosis code No.C100A is also set.

Q: Is diagnosis code No.C100A also set?

www.cargeek.ir

www.CarGeek.ir

YES : Perform the diagnosis for diagnosis code No.C100A (Refer to P.35C-19).
NO : Go to Step 4.

STEP 4. Connector check: A-58 ASC-ECU connector, A-08 front wheel speed sensor <LH> connector

Q: Is the check result normal?
YES : Go to Step 5.
NO : Repair the defective connector. Then go to Step 12.

STEP 5. Wiring harness check between A-58 ASC-ECU connector terminal No.45 and A-08 front wheel speed sensor <LH> connector terminal No.1 and between A-58 ASC-ECU connector terminal No.46 and A-08 front wheel speed sensor <LH> connector terminal No.2.

Q: Is the check result normal?
YES : Go to Step 6.
NO : Repair the wiring harness. Then go to Step 12.

STEP 6. Check for wheel speed sensor <FL> installation
Check how the wheel speed sensor <FL> is installed (Disconnection of wheel speed sensor <FL>, loose mounting bolt, etc.).

Q: Is the check result normal?
YES : Go to Step 7.
NO : Reinstall the wheel speed sensor <FL> correctly (Refer to P.35C-188). Then go to Step 7.

STEP 7. Check for wheel speed sensor <FL> output current
Refer to P.35C-179.

Q: Is the check result normal?
YES : Go to Step 8.
NO : Replace the wheel speed sensor <FL> (Refer to P.35C-188). Then go to Step 11.

STEP 8. Check for wheel bearing looseness

NOTE: Loose wheel bearing may increase the gap between the wheel speed sensor <FL> and the wheel speed detection magnet encoder. Check the wheel bearing <FL> for looseness. (Refer to GROUP 26 – Wheel Bearing Axial Play Check .)

Q: Is the check result normal?
YES : Go to Step 9.
NO : Replace the wheel bearing <FL> (Refer to GROUP 26 – Front Axle Hub Assembly). Then go to Step 12.

STEP 9. Check of wheel speed detection encoder

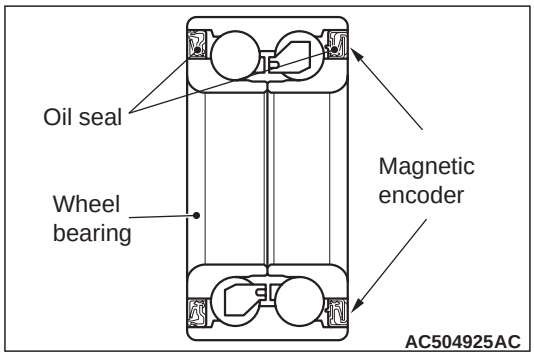

Check the encoder for adhesion of foreign materials or deformation.

Q: Is the check result normal?
YES : Go to Step 10.
NO (Adhesion of foreign materials) : Remove the foreign materials and clean the encoder so as not to disturb the magnetization pattern on it while taking care of the magnet, magnetic substance, and magnetic attraction. Then go to Step 12.
NO (Deformation) : Replace the wheel bearing <FL> (Refer to GROUP 26 – Front Axle Hub Assembly). Then go to Step 12.

STEP 10. Check whether the diagnosis code is reset.
(1) Erase the diagnosis code.
(2) Drive the vehicle at 20 km/h or higher.

NOTE: The ABS warning lamp does not turn OFF in some cases unless the vehicle runs at 20 km/h or higher.

Q: Is the diagnosis code No.C1011 set?
YES : Replace the wheel speed sensor <FL> (Refer to P.35C-188). Then go to Step 11.
NO : Intermittent malfunction (Refer to GROUP 00 – How to Use Troubleshooting/How to Cope with Intermittent Malfunctions).

STEP 11. Check whether the diagnosis code is reset.
(1) Erase the diagnosis code.
(2) Drive the vehicle at 20 km/h or higher.

NOTE: The ABS warning lamp does not turn OFF in some cases unless the vehicle runs at 20 km/h or higher.

www.cargeek.ir

www.CarGeek.ir

Q: Is the diagnosis code No.C1011 set?
YES : Replace the hydraulic unit (integrated with ASC-ECU) (Refer to P.35C-185). Then go to Step 12.
NO : This diagnosis is complete.

STEP 12. Check whether the diagnosis code is reset.
(1) Erase the diagnosis code.
(2) Drive the vehicle at 20 km/h or higher.
NOTE: The ABS warning lamp does not turn OFF in some cases unless the vehicle runs at 20 km/h or higher.

Q: Is the diagnosis code No.C1011 set?
YES : Return to Step 1.
NO : This diagnosis is complete.

Code No. C101C Abnormality in FR wheel speed sensor signal

Wheel Speed Sensor Circuit

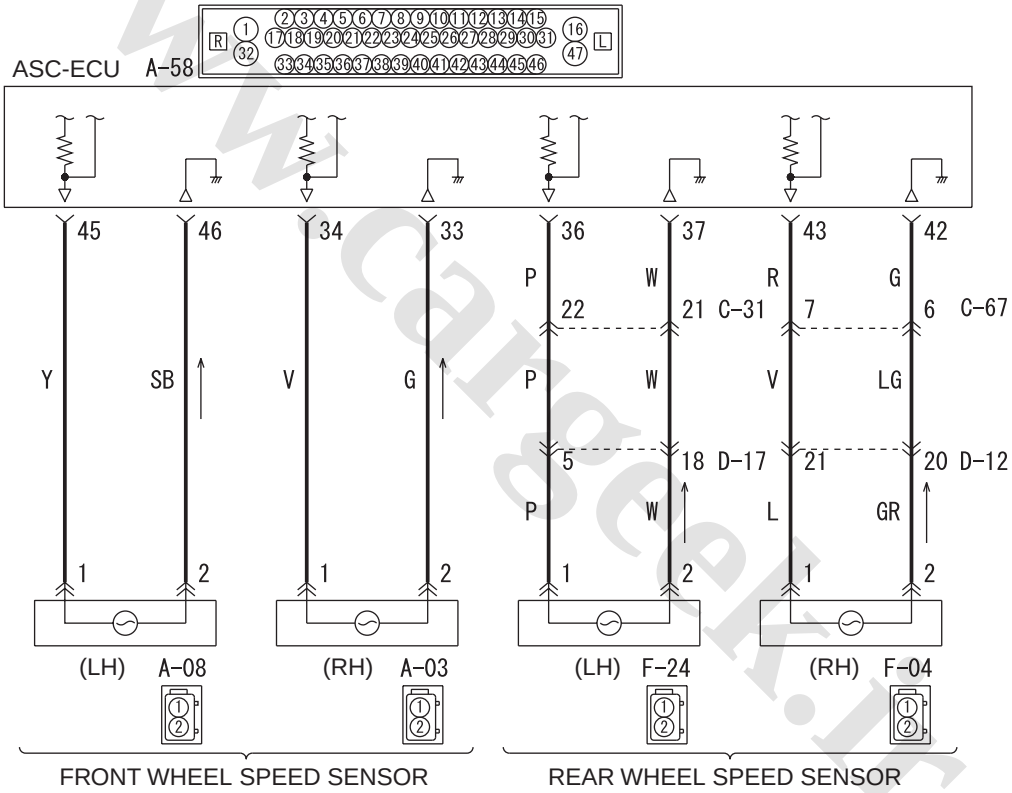

Wire colour code
B : Black LG : Light green G : Green L : Blue W : White Y : Yellow SB : Sky blue
BR : Brown O : Orange GR : Grey R : Red P : Pink V : Violet PU : Purple SI : Silver

ACB02565

www.cargeek.ir

www.CarGeek.ir

Connectors: A-03, A-58 <LHD>

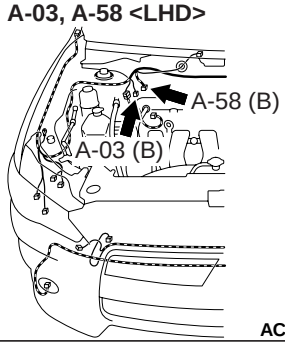

Connector: A-03 <RHD>

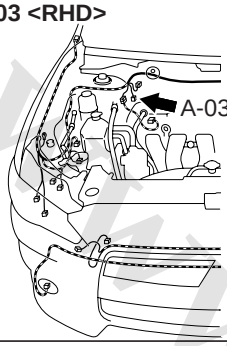

Connector: A-58 <RHD>

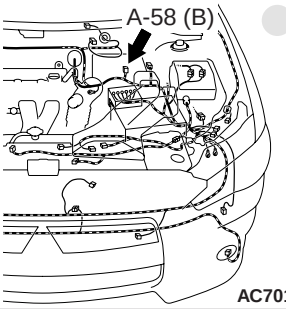

⚠ CAUTION

- **If there is any problem in the CAN bus lines, an incorrect diagnosis code may be set. Prior to this diagnosis, diagnose the CAN bus lines (Refer to GROUP 54C – CAN Bus Diagnostics Table).**
- **Whenever ECU is replaced, ensure that the CAN bus lines are normal.**
- **When the hydraulic unit (integrated with ASC-ECU) is replaced, always carry out the calibration of the steering wheel sensor, the G and yaw rate sensor and brake fluid pressure sensor (Refer to P.35C-182, P.35C-183 and P.35C-184).**

OPERATION

- The wheel speed sensor is a kind of a pulse generator. It consists of encoders (a plate on which north and south pole sides of the magnets are arranged alternately) for detecting the wheel speed which rotates at the same speed of the wheels and wheel speed sensors. This sensor outputs frequency pulse signals in proportion to the wheel speed.
- The pulse signals, which the wheel speed sensor creates, are sent to ASC-ECU. ASC-ECU uses the frequency of the pulse signals to determine the wheel speed.

DIAGNOSIS CODE SET CONDITIONS

ASC-ECU monitors the signals from each wheel speed sensor while the vehicle is being driven. If any fault below is found in these sensor signals, ASC-ECU will set the relevant diagnosis code.

- Irregular change in the wheel speed sensor signal
- Wheel speed sensor signal continuously indicates high value.

PROBABLE CAUSES

Current trouble

- Excessive gap between the wheel speed sensor and the wheel speed detection encoder
- Adhesion of foreign materials on the wheel speed sensor
- Adhesion of foreign materials on the wheel speed detection encoder
- Wheel bearing malfunction
- Malfunction of wheel speed sensor
- Damaged wiring harness and connectors
- External noise interference
- Improper installation of the wheel speed sensor
- Deformation of the wheel speed detection encoder

www.cargeek.ir

www.CarGeek.ir

- ASC-ECU malfunction
- Disturbance of magnetisation pattern for wheel speed detection encoder
- The number of poles on the Magnetic encoder for wheel speed detection (N-pole and S-pole) is changed

Past trouble

- When diagnosis code No.C1015 is also set, carry out diagnosis with particular emphasis on wiring harness and connector failures between ASC-ECU and the wheel speed sensor. For diagnosis procedures, refer to How to treat past trouble (GROUP 00 – How to Use Troubleshooting/How to Treat Past Trouble).
- When diagnosis code No.C1015 is not set, the following conditions may be present:
  - Some wheels slip
  - Unstable vehicle attitude
  - External noise interference
  - Vehicle ran with the parking brake applied

DIAGNOSTIC PROCEDURE

STEP 1. M.U.T.-III CAN bus diagnosis
Use M.U.T.-III to diagnose the CAN bus lines.

Q: Is the check result normal?
YES : Go to Step 3.
NO : Repair the CAN bus lines (Refer to GROUP 54C – CAN Bus Diagnostics Table). On completion, go to Step 2.

STEP 2. Diagnosis code recheck after resetting CAN bus lines

Q: Is the diagnosis code No.C101C set?
YES : Go to Step 3.
NO : This diagnosis is complete.

STEP 3. M.U.T.-III diagnosis code
Check that diagnosis code No. C1015 is also set.

Q: Is diagnosis code No. C1015 also set?
YES : Perform the diagnosis for diagnosis code No. C1015 (Refer to P.35C-23).
NO : Go to Step 4.

STEP 4. Connector check: A-58 ASC-ECU connector, A-03 front wheel speed sensor <RH> connector

Q: Is the check result normal?
YES : Go to Step 5.
NO : Repair the defective connector. Then go to Step 12.

STEP 5. Wiring harness check between A-58 ASC-ECU connector terminal No.34 and A-03 front wheel speed sensor <RH> connector terminal No.1 and between A-58 ASC-ECU connector terminal No.33 and A-03 front wheel speed sensor <RH> connector terminal No.2.

Q: Is the check result normal?
YES : Go to Step 6.
NO : Repair the wiring harness. Then go to Step 12.

STEP 6. Check for wheel speed sensor <FR> installation
Check how the wheel speed sensor <FR> is installed (Disconnection of wheel speed sensor <FR>, loose mounting bolt, etc.).

Q: Is the check result normal?
YES : Go to Step 7.
NO : Reinstall the wheel speed sensor <FR> correctly (Refer to P.35C-188). Then go to Step 7.

STEP 7. Check for wheel speed sensor <FR> output current
Refer to P.35C-179.

Q: Is the check result normal?
YES : Go to Step 8.
NO : Replace the wheel speed sensor <FR> (Refer to P.35C-188). Then go to Step 11.

STEP 8. Check for wheel bearing looseness
NOTE: Loose wheel bearing may increase the gap between the wheel speed sensor <FR> and the wheel speed detection magnet encoder. Check the wheel bearing <FR> for looseness. (Refer to GROUP 26 – Wheel Bearing Axial Play Check .)

Q: Is the check result normal?
YES : Go to Step 9.
NO : Replace the wheel bearing <FR> (Refer to GROUP 26 – Front Axle Hub Assembly). Then go to Step 12.

www.cargeek.ir

www.CarGeek.ir

STEP 9. Check of wheel speed detection encoder

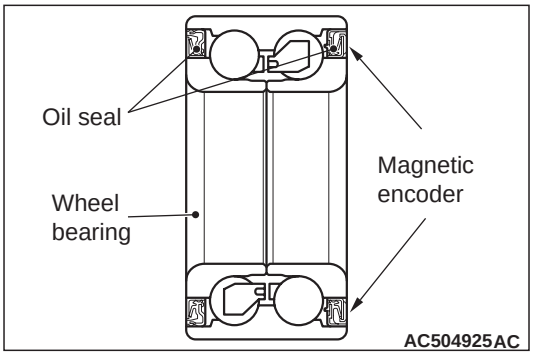

Check the encoder for adhesion of foreign materials or deformation.

Q: Is the check result normal?
YES : Go to Step 10.
NO (Adhesion of foreign materials) : Remove the foreign materials and clean the encoder so as not to disturb the magnetization pattern on it while taking care of the magnet, magnetic substance, and magnetic attraction. Then go to Step 12.
NO (Deformation) : Replace the wheel bearing <FR> (Refer to GROUP 26 – Front Axle Hub Assembly). Then go to Step 12.

STEP 10. Check whether the diagnosis code is reset.
(1) Erase the diagnosis code.
(2) Drive the vehicle at 20 km/h or higher.

NOTE: The ABS warning lamp does not turn OFF in some cases unless the vehicle runs at 20 km/h or higher.

Q: Is the diagnosis code No.C101C set?
YES : Replace the wheel speed sensor <FR> (Refer to P.35C-188). Then go to Step 11.
NO : Intermittent malfunction (Refer to GROUP 00 – How to Use Troubleshooting/How to Cope with Intermittent Malfunctions).

STEP 11. Check whether the diagnosis code is reset.
(1) Erase the diagnosis code.
(2) Drive the vehicle at 20 km/h or higher.

NOTE: The ABS warning lamp does not turn OFF in some cases unless the vehicle runs at 20 km/h or higher.

Q: Is the diagnosis code No.C101C set?
YES : Replace the hydraulic unit (integrated with ASC-ECU) (Refer to P.35C-185). Then go to Step 12.
NO : This diagnosis is complete.

STEP 12. Check whether the diagnosis code is reset.
(1) Erase the diagnosis code.
(2) Drive the vehicle at 20 km/h or higher.

NOTE: The ABS warning lamp does not turn OFF in some cases unless the vehicle runs at 20 km/h or higher.

Q: Is the diagnosis code No.C101C set?
YES : Return to Step 1.
NO : This diagnosis is complete.

www.cargeek.ir

www.CarGeek.ir

Code No. C1027 Abnormality in RL wheel speed sensor signal

Wheel Speed Sensor Circuit

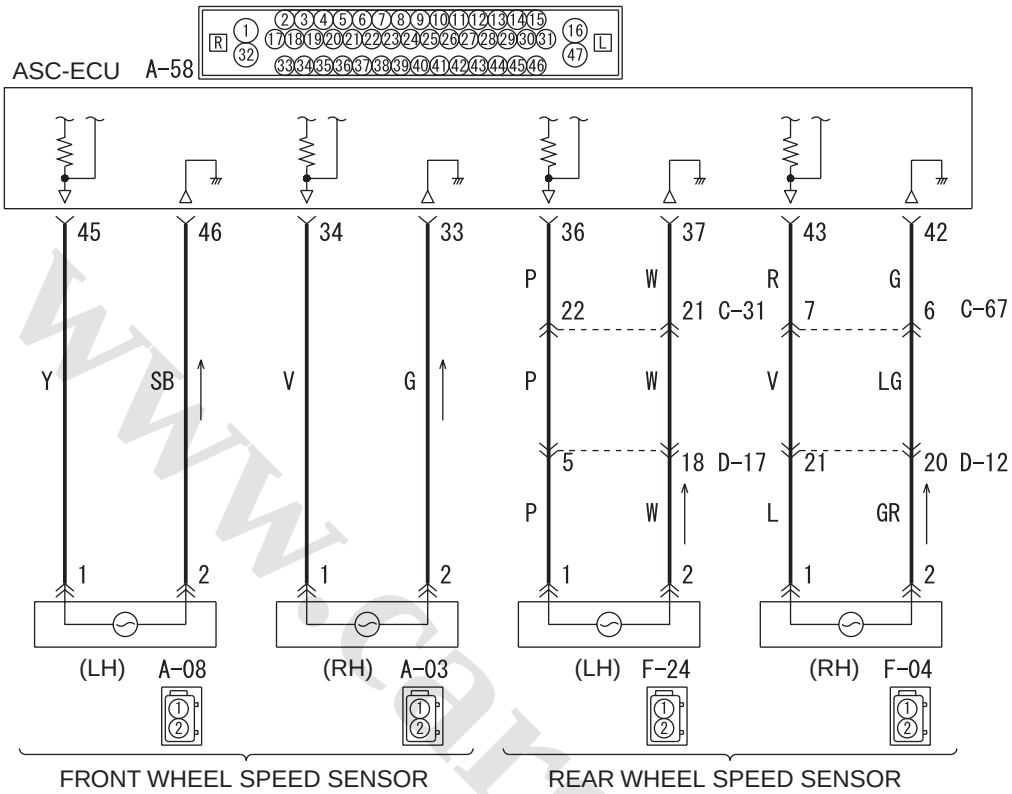

Wire colour code
B : Black LG : Light green G : Green L : Blue W : White Y : Yellow SB : Sky blue
BR : Brown O : Orange GR : Grey R : Red P : Pink V : Violet PU : Purple SI : Silver

ACB02565

Connector: A-58 <LHD>

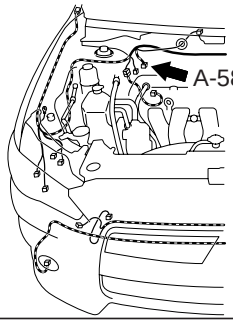

AC612691AO

Connector: A-58 <RHD>

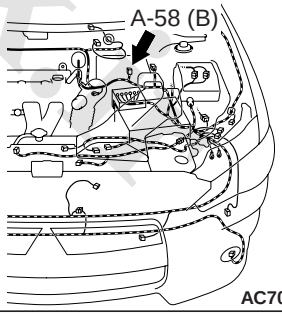

AC701238AF

www.cargeek.ir

www.CarGeek.ir

Connector: C-31 <LHD>

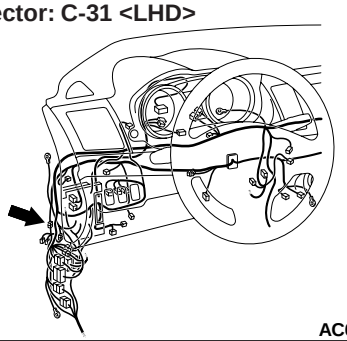

AC612705AF

Connector: C-31 <RHD>

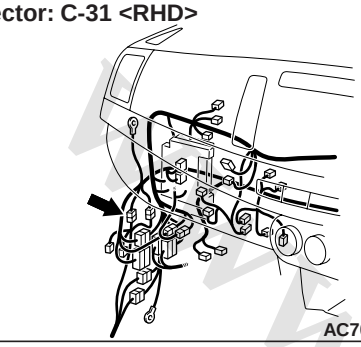

AC701121AM

Connector: D-17

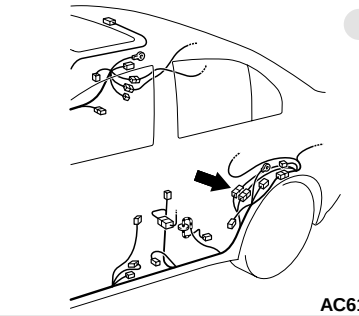

AC612723AU

Connector: F-24 <LANCER>

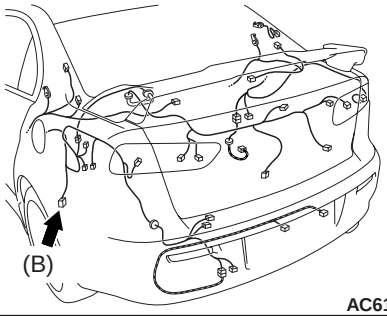

AC612744BH

Connector: F-24 <LANCER SPORTBACK>

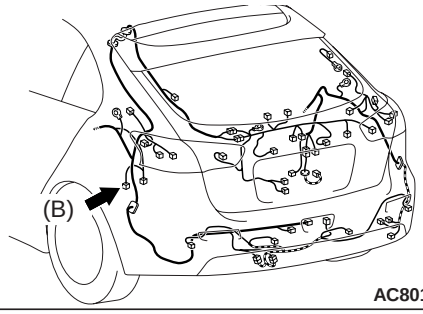

AC801775BM

⚠ CAUTION

- **If there is any problem in the CAN bus lines, an incorrect diagnosis code may be set. Prior to this diagnosis, diagnose the CAN bus lines (Refer to GROUP 54C – CAN Bus Diagnostics Table).**
- **Whenever ECU is replaced, ensure that the CAN bus lines are normal.**
- **When the hydraulic unit (integrated with ASC-ECU) is replaced, always carry out the calibration of the steering wheel sensor, the G and yaw rate sensor and brake fluid pressure sensor (Refer to P.35C-182, P.35C-183 and P.35C-184).**

OPERATION

- The wheel speed sensor is a kind of a pulse generator. It consists of encoders (a plate on which north and south pole sides of the magnets are arranged alternately) for detecting the wheel speed which rotates at the same speed of the wheels and wheel speed sensors. This sensor outputs frequency pulse signals in proportion to the wheel speed.
- The pulse signals, which the wheel speed sensor creates, are sent to ASC-ECU. ASC-ECU uses the frequency of the pulse signals to determine the wheel speed.

DIAGNOSIS CODE SET CONDITIONS

ASC-ECU monitors the signals from each wheel speed sensor while the vehicle is being driven. If any fault below is found in these sensor signals, ASC-ECU will set the relevant diagnosis code.

- Irregular change in the wheel speed sensor signal
- Wheel speed sensor signal continuously indicates high value.

PROBABLE CAUSES

Current trouble

- Excessive gap between the wheel speed sensor and the wheel speed detection encoder
- Adhesion of foreign materials on the wheel speed sensor
- Adhesion of foreign materials on the wheel speed detection encoder
- Wheel bearing malfunction
- Malfunction of wheel speed sensor
- Damaged wiring harness and connectors
- External noise interference
- Improper installation of the wheel speed sensor
- Deformation of the wheel speed detection encoder

www.cargeek.ir

www.CarGeek.ir

- ASC-ECU malfunction
- Disturbance of magnetisation pattern for wheel speed detection encoder
- The number of poles on the Magnetic encoder for wheel speed detection (N-pole and S-pole) is changed

Past trouble

- When diagnosis code No.C1020 is also set, carry out diagnosis with particular emphasis on wiring harness and connector failures between ASC-ECU and the wheel speed sensor. For diagnosis procedures, refer to How to treat past trouble (GROUP 00 – How to Use Troubleshooting/How to Treat Past Trouble).
- When diagnosis code No.C1020 is not set, the following conditions may be present:
  - Some wheels slip
  - Unstable vehicle attitude
  - External noise interference
  - Vehicle ran with the parking brake applied.

DIAGNOSTIC PROCEDURE

STEP 1. M.U.T.-III CAN bus diagnosis
Use M.U.T.-III to diagnose the CAN bus lines.

Q: Is the check result normal?
YES : Go to Step 3.
NO : Repair the CAN bus lines (Refer to GROUP 54C – CAN Bus Diagnostics Table). On completion, go to Step 2.

STEP 2. Diagnosis code recheck after resetting CAN bus lines

Q: Is the diagnosis code No.C1027 set?
YES : Go to Step 3.
NO : This diagnosis is complete.

STEP 3. M.U.T.-III diagnosis code
Check that the diagnosis code No. C1020 is also set.

Q: Is the diagnosis code No. C1020 also set?
YES : Perform the diagnosis for the diagnosis code No. C1020 (Refer to P.35C-27).
NO : Go to Step 4.

STEP 4. Connector check: A-58 ASC-ECU connector, C-31 intermediate connector, D-17 intermediate connector, F-24 rear wheel speed sensor <LH> connector

Q: Is the check result normal?
YES : Go to Step 5.
NO : Repair the defective connector. Then go to Step 12.

STEP 5. Wiring harness check between A-58 ASC-ECU connector terminal No.36 and F-24 rear wheel speed sensor <LH> connector terminal No.1, and between A-58 ASC-ECU connector terminal No.37 and F-24 rear wheel speed sensor <LH> connector terminal No.2.

Q: Is the check result normal?
YES : Go to Step 6.
NO : Repair the wiring harness. Then go to Step 12.

STEP 6. Check for wheel speed sensor <RL> installation
Check how the wheel speed sensor <RL> is installed (Disconnection of wheel speed sensor <RL>, loose mounting bolt, etc.).

Q: Is the check result normal?
YES : Go to Step 7.
NO : Reinstall the wheel speed sensor <RL> correctly (Refer to P.35C-188). Then go to Step 7.

STEP 7. Check for wheel speed sensor <RL> output current
Refer to P.35C-179.

Q: Is the check result normal?
YES : Go to Step 8.
NO : Replace the wheel speed sensor <RL> (Refer to P.35C-188). Then go to Step 11.

STEP 8. Check for wheel bearing looseness

NOTE:
- *Loose wheel bearing may increase the gap between the wheel speed sensor <RL> and the wheel speed detection magnet encoder.*
- *Check the Rear wheel hub assembly <RL> (Refer to GROUP 27 – Wheel Bearing Axial Play Check).*

Q: Is the check result normal?
YES : Go to Step 9.
NO : Replace the rear wheel hub assembly <RL> (Refer to GROUP 27 – Rear axle hub assembly). Then go to Step 12.

www.cargeek.ir

www.CarGeek.ir

STEP 9. Check of wheel speed detection encoder

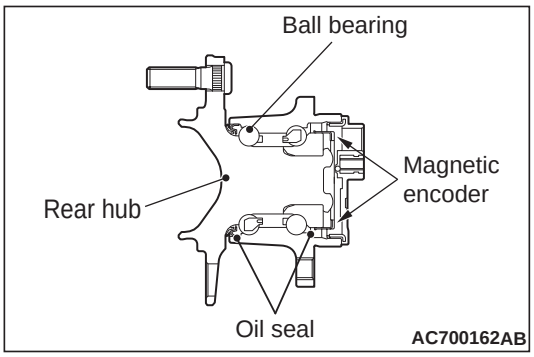

Check the encoder for adhesion of foreign materials or deformation.

Q: Is the check result normal?
YES : Go to Step 10.
NO (Adhesion of foreign materials) : Remove the foreign materials and clean the encoder so as not to disturb the magnetization pattern on it while taking care of the magnet, magnetic substance, and magnetic attraction. Then go to Step 12.
NO (Deformation) : Replace the rear wheel hub assembly <RL> (Refer to GROUP 27 – Rear axle hub assembly). Then go to Step 12.

STEP 10. Check whether the diagnosis code is reset.
(1) Erase the diagnosis code.
(2) Drive the vehicle at 20 km/h or higher.

NOTE: The ABS warning lamp does not turn OFF in some cases unless the vehicle runs at 20 km/h or higher.

Q: Is the diagnosis code No.C1027 set?
YES : Replace the wheel speed sensor <RL> (Refer to P.35C-188). Then go to Step 11.
NO : Intermittent malfunction (Refer to GROUP 00 – How to Use Troubleshooting/How to Cope with Intermittent Malfunctions).

STEP 11. Check whether the diagnosis code is reset.
(1) Erase the diagnosis code.
(2) Drive the vehicle at 20 km/h or higher.

NOTE: The ABS warning lamp does not turn OFF in some cases unless the vehicle runs at 20 km/h or higher.

Q: Is the diagnosis code No.C1027 set?
YES : Replace the hydraulic unit (integrated with ASC-ECU) (Refer to P.35C-185). Then go to Step 12.
NO : This diagnosis is complete.

STEP 12. Check whether the diagnosis code is reset.
(1) Erase the diagnosis code.
(2) Drive the vehicle at 20 km/h or higher.

NOTE: The ABS warning lamp does not turn OFF in some cases unless the vehicle runs at 20 km/h or higher.

Q: Is the diagnosis code No.C1027 set?
YES : Return to Step 1.
NO : This diagnosis is complete.

www.cargeek.ir

www.CarGeek.ir

Code No. C1032 Abnormality in RR wheel speed sensor signal

Wheel Speed Sensor Circuit

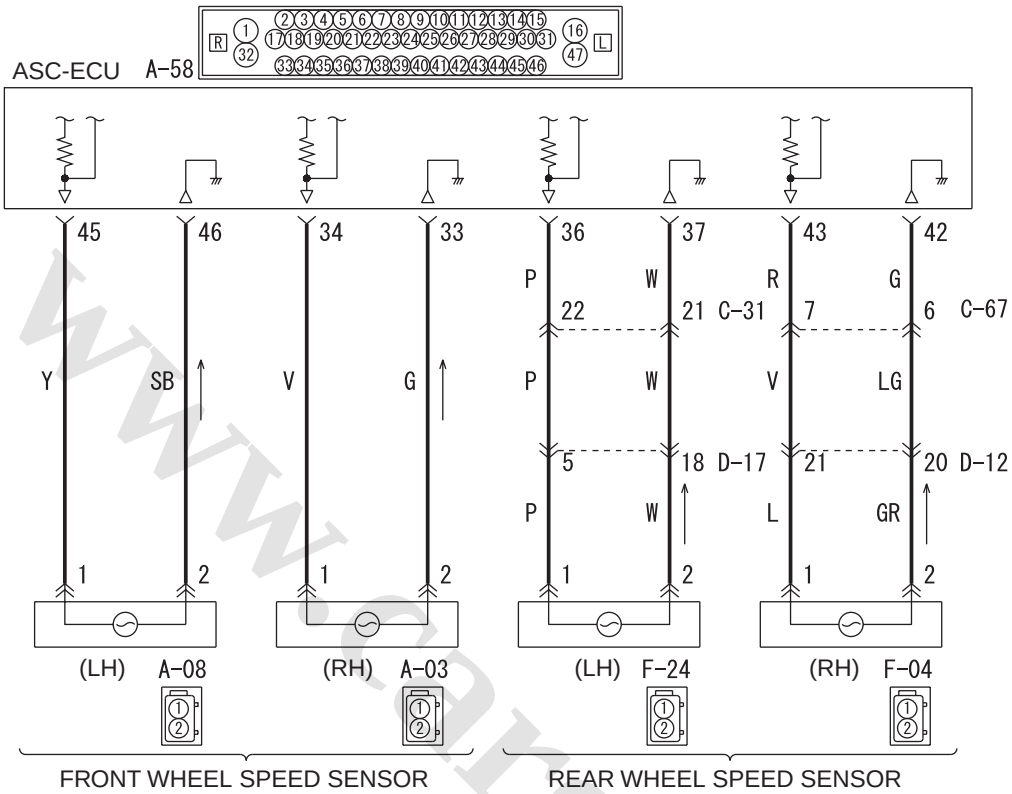

Wire colour code
B : Black LG : Light green G : Green L : Blue W : White Y : Yellow SB : Sky blue
BR : Brown O : Orange GR : Grey R : Red P : Pink V : Violet PU : Purple SI : Silver

ACB02565

Connector: A-58 <LHD>

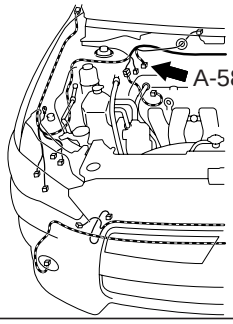

AC612691AO

Connector: A-58 <RHD>

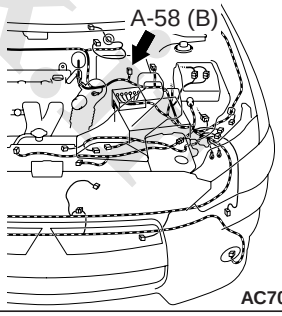

AC701238AF

www.cargeek.ir

www.CarGeek.ir

Connector: C-67 <LHD>

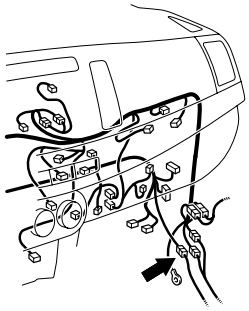

ACB02572 AB

Connector: C-67 <RHD>

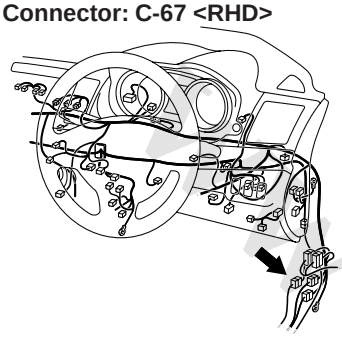

ACA00895AT

Connector: D-12

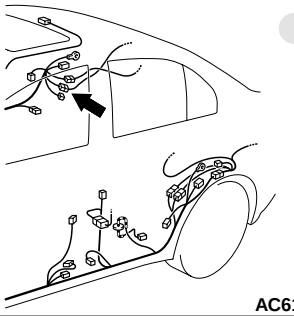

AC612723AL

Connector: F-04 <LANCER>

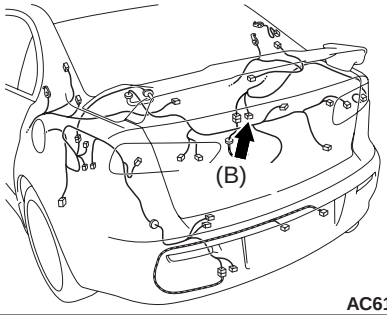

AC612744 BI

Connector: F-04 <LANCER SPORTBACK>

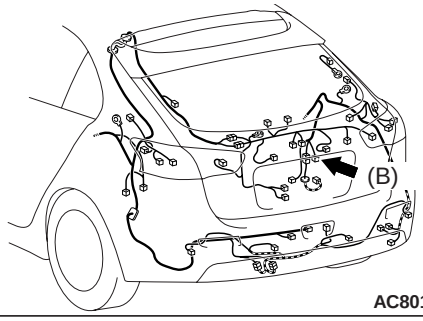

AC801775BN

⚠ CAUTION

- **If there is any problem in the CAN bus lines, an incorrect diagnosis code may be set. Prior to this diagnosis, diagnose the CAN bus lines (Refer to GROUP 54C – CAN Bus Diagnostics Table).**
- **Whenever ECU is replaced, ensure that the CAN bus lines are normal.**
- **When the hydraulic unit (integrated with ASC-ECU) is replaced, always carry out the calibration of the steering wheel sensor, the G and yaw rate sensor and brake fluid pressure sensor (Refer to P.35C-182, P.35C-183 and P.35C-184).**

OPERATION

- The wheel speed sensor is a kind of a pulse generator. It consists of encoders (a plate on which north and south pole sides of the magnets are arranged alternately) for detecting the wheel speed which rotates at the same speed of the wheels and wheel speed sensors. This sensor outputs frequency pulse signals in proportion to the wheel speed.
- The pulse signals, which the wheel speed sensor creates, are sent to ASC-ECU. ASC-ECU uses the frequency of the pulse signals to determine the wheel speed.

DIAGNOSIS CODE SET CONDITIONS

ASC-ECU monitors the signals from each wheel speed sensor while the vehicle is being driven. If any fault below is found in these sensor signals, ASC-ECU will set the relevant diagnosis code.

- Irregular change in the wheel speed sensor signal
- Wheel speed sensor signal continuously indicates high value.

PROBABLE CAUSES

Current trouble

- Excessive gap between the wheel speed sensor and the wheel speed detection encoder
- Adhesion of foreign materials on the wheel speed sensor
- Adhesion of foreign materials on the wheel speed detection encoder
- Wheel bearing malfunction
- Malfunction of wheel speed sensor
- Damaged wiring harness and connectors
- External noise interference
- Improper installation of the wheel speed sensor
- Deformation of the wheel speed detection encoder

www.cargeek.ir

www.CarGeek.ir

- ASC-ECU malfunction
- Disturbance of magnetisation pattern for wheel speed detection encoder
- The number of poles on the Magnetic encoder for wheel speed detection (N-pole and S-pole) is changed

Past trouble

- When diagnosis code No.C102B is also set, carry out diagnosis with particular emphasis on wiring harness and connector failures between ASC-ECU and the wheel speed sensor. For diagnosis procedures, refer to How to treat past trouble (GROUP 00 – How to Use Troubleshooting/How to Treat Past Trouble).
- When diagnosis code No.C102B is not set, the following conditions may be present:
  - Some wheels slip
  - Unstable vehicle attitude
  - External noise interference
  - Vehicle ran with the parking brake applied.

DIAGNOSTIC PROCEDURE

STEP 1. M.U.T.-III CAN bus diagnosis
Use M.U.T.-III to diagnose the CAN bus lines.

Q: Is the check result normal?
YES : Go to Step 3.
NO : Repair the CAN bus lines (Refer to GROUP 54C – CAN Bus Diagnostics Table). On completion, go to Step 2.

STEP 2. Diagnosis code recheck after resetting CAN bus lines

Q: Is the diagnosis code No.C1032 set?
YES : Go to Step 3.
NO : This diagnosis is complete.

STEP 3. M.U.T.-III diagnosis code
Check that the diagnosis code No. C102B is also set.

Q: Is the diagnosis code No. C102B also set?
YES : Perform the diagnosis for the diagnosis code No. C102B (Refer to P.35C-31).
NO : Go to Step 4.

STEP 4. Connector check: A-58 ASC-ECU connector, C-67 intermediate connector, D-12 intermediate connector, F-04 rear wheel speed sensor <RH> connector

Q: Is the check result normal?
YES : Go to Step 5.
NO : Repair the defective connector. Then go to Step 12.

STEP 5. Wiring harness check between A-58 ASC-ECU connector terminal No.43 and F-04 rear wheel speed sensor <RH> connector terminal No.1, and between A-58 ASC-ECU connector terminal No.42 and F-04 rear wheel speed sensor <RH> connector terminal No.2.

Q: Is the check result normal?
YES : Go to Step 6.
NO : Repair the wiring harness. Then go to Step 12.

STEP 6. Check for wheel speed sensor <RR> installation
Check how the wheel speed sensor <RR> is installed (Disconnection of wheel speed sensor <RR>, loose mounting bolt, etc.).

Q: Is the check result normal?
YES : Go to Step 7.
NO : Reinstall the wheel speed sensor <RR> correctly (Refer to P.35C-188). Then go to Step 7.

STEP 7. Check for wheel speed sensor <RR> output current
Refer to P.35C-179.

Q: Is the check result normal?
YES : Go to Step 8.
NO : Replace the wheel speed sensor <RR> (Refer to P.35C-188). Then go to Step 11.

STEP 8. Check for wheel bearing looseness

NOTE:
- *Loose wheel bearing may increase the gap between the wheel speed sensor <RR> and the wheel speed detection magnet encoder.*
- *Check the Rear wheel hub assembly <RR> (Refer to GROUP 27 – Wheel Bearing Axial Play Check).*

Q: Is the check result normal?
YES : Go to Step 9.
NO : Replace the rear wheel hub assembly <RR> (Refer to GROUP 27 – Rear axle hub assembly). Then go to Step 12.

www.cargeek.ir

www.CarGeek.ir

STEP 9. Check of wheel speed detection encoder

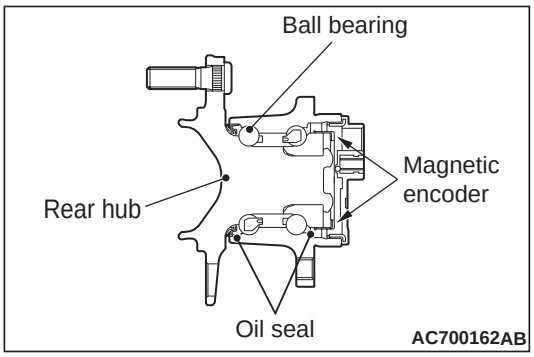

Check the encoder for adhesion of foreign materials or deformation.

Q: Is the check result normal?
YES : Go to Step 10.
NO (Adhesion of foreign materials) : Remove the foreign materials and clean the encoder so as not to disturb the magnetization pattern on it while taking care of the magnet, magnetic substance, and magnetic attraction. Then go to Step 12.
NO (Deformation) : Replace the rear wheel hub assembly <RR> (Refer to GROUP 27 – Rear axle hub assembly). Then go to Step 12.

STEP 10. Check whether the diagnosis code is reset.
(1) Erase the diagnosis code.
(2) Drive the vehicle at 20 km/h or higher.

NOTE: The ABS warning lamp does not turn OFF in some cases unless the vehicle runs at 20 km/h or higher.

Q: Is the diagnosis code No.C1032 set?
YES : Replace the wheel speed sensor <RR> (Refer to P.35C-188). Then go to Step 11.
NO : Intermittent malfunction (Refer to GROUP 00 – How to Use Troubleshooting/How to Cope with Intermittent Malfunctions).

STEP 11. Check whether the diagnosis code is reset.
(1) Erase the diagnosis code.
(2) Drive the vehicle at 20 km/h or higher.

NOTE: The ABS warning lamp does not turn OFF in some cases unless the vehicle runs at 20 km/h or higher.

Q: Is the diagnosis code No.C1032 set?
YES : Replace the hydraulic unit (integrated with ASC-ECU) (Refer to P.35C-185). Then go to Step 12.
NO : This diagnosis is complete.

STEP 12. Check whether the diagnosis code is reset.
(1) Erase the diagnosis code.
(2) Drive the vehicle at 20 km/h or higher.

NOTE: The ABS warning lamp does not turn OFF in some cases unless the vehicle runs at 20 km/h or higher.

Q: Is the diagnosis code No.C1032 set?
YES : Return to Step 1.
NO : This diagnosis is complete.

Code No. C1014 Mutual monitoring of FL wheel speed sensor

⚠ CAUTION
- **If there is any problem in the CAN bus lines, an incorrect diagnosis code may be set. Prior to this diagnosis, diagnose the CAN bus lines (Refer to GROUP 54C – CAN Bus Diagnostics Table).**
- **Whenever ECU is replaced, ensure that the CAN bus lines are normal.**
- **When the hydraulic unit (integrated with ASC-ECU) is replaced, always carry out the calibration of the steering wheel sensor, the G and yaw rate sensor and brake fluid pressure sensor (Refer to P.35C-182, P.35C-183 and P.35C-184).**

OPERATION
- The wheel speed sensor is a kind of a pulse generator. It consists of encoders (a plate on which north and south pole sides of the magnets are arranged alternately) for detecting the wheel speed which rotates at the same speed of the wheels and wheel speed sensors. This sensor outputs frequency pulse signals in proportion to the wheel speed.
- The pulse signals, which the wheel speed sensor creates, are sent to ASC-ECU. ASC-ECU uses the frequency of the pulse signals to determine the wheel speed.

www.cargeek.ir

www.CarGeek.ir

DIAGNOSIS CODE SET CONDITIONS

ASC-ECU monitors the signals from each wheel speed sensor while the vehicle is being driven. If any fault below is found in these sensor signals, ASC-ECU will set the relevant diagnosis code.

- Missing wheel speed sensor signal
- Wheel speed sensor signal continuously indicates low value.

PROBABLE CAUSES

Current trouble

- Excessive gap between the wheel speed sensor and the wheel speed detection encoder
- Wheel bearing malfunction
- Deformation of the wheel speed detection encoder
- Adhesion of foreign materials on the wheel speed sensor
- Adhesion of foreign materials on the wheel speed detection encoder
- Malfunction of wheel speed sensor
- Improper installation of the wheel speed sensor
- ASC-ECU malfunction
- The number of poles on the Magnetic encoder for wheel speed detection (N-pole and S-pole) is changed

Past trouble

- When diagnosis code No.C100A is also set, carry out diagnosis with particular emphasis on wiring harness and connector failures between ASC-ECU and the wheel speed sensor. For diagnosis procedures, refer to How to treat past trouble (GROUP 00 – How to Use Troubleshooting/How to Treat Past Trouble).
- When diagnosis code No.C100A is not set, the following conditions may be present:
  - Some wheels slip
  - Unstable vehicle attitude
  - External noise interference
  - Vehicle ran with the parking brake applied.
  - Rotate only two wheels with drum tester

DIAGNOSIS PROCEDURE

STEP 1. M.U.T.-III CAN bus diagnosis

Use M.U.T.-III to diagnose the CAN bus lines.

Q: Is the check result normal?

YES : Go to Step 3.
NO : Repair the CAN bus lines (Refer to GROUP 54C – CAN Bus Diagnostics Table). On completion, go to Step 2.

STEP 2. Diagnosis code recheck after resetting CAN bus lines

Q: Is the diagnosis code No.C1014 set?

YES : Go to Step 3.
NO : This diagnosis is complete.

STEP 3. M.U.T.-III diagnosis code

Check that diagnosis code No.C100A is also set.

Q: Is diagnosis code No.C100A also set?

YES : Perform the diagnosis for diagnosis code No.C100A (Refer to P.35C-19).
NO : Go to Step 4.

STEP 4. Check for wheel speed sensor <FL> installation

Check how the wheel speed sensor <FL> is installed (Disconnection of wheel speed sensor <FL>, loose mounting bolt, etc.).

Q: Is the check result normal?

YES : Go to Step 5.
NO : Reinstall the wheel speed sensor <FL> correctly (Refer to P.35C-188). Then go to Step 5.

STEP 5. Check for wheel speed sensor <FL> output current

Refer to P.35C-179.

Q: Is the check result normal?

YES : Go to Step 6.
NO : Replace the wheel speed sensor <FL> (Refer to P.35C-188). Then go to Step 9.

STEP 6. Check for wheel bearing looseness

NOTE: Loose wheel bearing may increase the gap between the wheel speed sensor <FL> and the wheel speed detection magnet encoder. Check the wheel bearing <FL> for looseness (Refer to GROUP 26 – Wheel Bearing Axial Play Check).

Q: Is the check result normal?

YES : Go to Step 7.
NO : Replace the wheel bearing <FL> (Refer to GROUP 26 – Front Axle Hub Assembly). Then go to Step 10.

www.cargeek.ir

www.CarGeek.ir

STEP 7. Check of wheel speed detection encoder

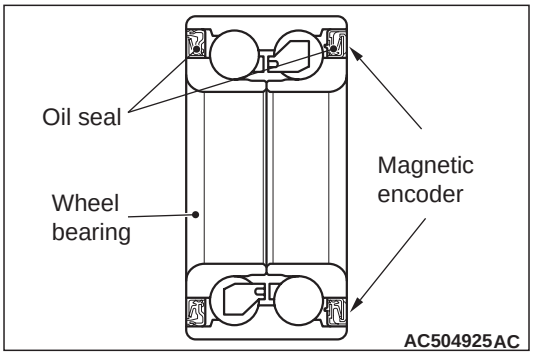

Check the encoder for adhesion of foreign materials or deformation.

Q: Is the check result normal?
YES : Go to Step 8.
NO (Adhesion of foreign materials) : Remove the foreign materials and clean the encoder so as not to disturb the magnetisation pattern on it while taking care of the magnet, magnetic substance, and magnetic attraction. Then go to Step 10.
NO (Deformation) : Replace the wheel bearing <FL> (Refer to GROUP 26 – Front Axle Hub Assembly). Then go to Step 10.

STEP 8. Check whether the diagnosis code is reset.
(1) Erase the diagnosis code.
(2) Drive the vehicle at 20 km/h or higher.

NOTE: The ABS warning lamp does not turn OFF in some cases unless the vehicle runs at 20 km/h or higher.

Q: Is diagnosis code No. C1014 set?
YES : Replace the wheel speed sensor <FL> (Refer to P.35C-188). Then go to Step 9.
NO : Intermittent malfunction (Refer to GROUP 00 – How to Use Troubleshooting/How to Cope with Intermittent Malfunctions).

STEP 9. Check whether the diagnosis code is reset.
(1) Erase the diagnosis code.
(2) Drive the vehicle at 20 km/h or higher.

NOTE: The ABS warning lamp does not turn OFF in some cases unless the vehicle runs at 20 km/h or higher.

Q: Is diagnosis code No. C1014 set?
YES : Replace the hydraulic unit (integrated with ASC-ECU) (Refer to P.35C-185). Then go to Step 10.
NO : This diagnosis is complete.

STEP 10. Check whether the diagnosis code is reset.
(1) Erase the diagnosis code.
(2) Drive the vehicle at 20 km/h or higher.

NOTE: The ABS warning lamp does not turn OFF in some cases unless the vehicle runs at 20 km/h or higher.

Q: Is diagnosis code No. C1014 set?
YES : Return to Step 1.
NO : This diagnosis is complete.

Code No. C101F Mutual monitoring of FR wheel speed sensor

⚠ CAUTION
- **If there is any problem in the CAN bus lines, an incorrect diagnosis code may be set. Prior to this diagnosis, diagnose the CAN bus lines (Refer to GROUP 54C – CAN Bus Diagnostics Table).**
- **Whenever ECU is replaced, ensure that the CAN bus lines are normal.**
- **When the hydraulic unit (integrated with ASC-ECU) is replaced, always carry out the calibration of the steering wheel sensor, the G and yaw rate sensor and brake fluid pressure sensor (Refer to P.35C-182, P.35C-183 and P.35C-184).**

OPERATION
- The wheel speed sensor is a kind of a pulse generator. It consists of encoders (a plate on which north and south pole sides of the magnets are arranged alternately) for detecting the wheel speed which rotates at the same speed of the wheels and wheel speed sensors. This sensor outputs frequency pulse signals in proportion to the wheel speed.
- The pulse signals, which the wheel speed sensor creates, are sent to ASC-ECU. ASC-ECU uses the frequency of the pulse signals to determine the wheel speed.

www.cargeek.ir

www.CarGeek.ir

DIAGNOSIS CODE SET CONDITIONS

ASC-ECU monitors the signals from each wheel speed sensor while the vehicle is being driven. If any fault below is found in these sensor signals, ASC-ECU will set the relevant diagnosis code.

- Missing wheel speed sensor signal
- Wheel speed sensor signal continuously indicates low value.

PROBABLE CAUSES

Current trouble

- Excessive gap between the wheel speed sensor and the wheel speed detection encoder
- Wheel bearing malfunction
- Deformation of the wheel speed detection encoder
- Adhesion of foreign materials on the wheel speed sensor
- Adhesion of foreign materials on the wheel speed detection encoder
- Malfunction of wheel speed sensor
- Improper installation of the wheel speed sensor
- ASC-ECU malfunction
- The number of poles on the Magnetic encoder for wheel speed detection (N-pole and S-pole) is changed

Past trouble

- When diagnosis code No.C1015 is also set, carry out diagnosis with particular emphasis on wiring harness and connector failures between ASC-ECU and the wheel speed sensor. For diagnosis procedures, refer to How to treat past trouble (GROUP 00 – How to Use Troubleshooting/How to Treat Past Trouble).
- When diagnosis code No.C1015 is not set, the following conditions may be present:
  - Some wheels slip
  - Unstable vehicle attitude
  - External noise interference
  - Vehicle ran with the parking brake applied.
  - Rotate only two wheels with drum tester

DIAGNOSIS PROCEDURE

STEP 1. M.U.T.-III CAN bus diagnosis

Use M.U.T.-III to diagnose the CAN bus lines.

Q: Is the check result normal?

YES : Go to Step 3.
NO : Repair the CAN bus lines (Refer to GROUP 54C – CAN Bus Diagnostics Table). On completion, go to Step 2.

STEP 2. Diagnosis code recheck after resetting CAN bus lines

Q: Is the diagnosis code No.C101F set?

YES : Go to Step 3.
NO : This diagnosis is complete.

STEP 3. M.U.T.-III diagnosis code

Check that diagnosis code No.C1015 is also set.

Q: Is diagnosis code No.C1015 also set?

YES : Perform the diagnosis for diagnosis code No.C1015 (Refer to P.35C-23).
NO : Go to Step 4.

STEP 4. Check for wheel speed sensor <FR> installation

Check how the wheel speed sensor <FR> is installed (Disconnection of wheel speed sensor <FR>, loose mounting bolt, etc.).

Q: Is the check result normal?

YES : Go to Step 5.
NO : Reinstall the wheel speed sensor <FR> correctly (Refer to P.35C-188). Then go to Step 5.

STEP 5. Check for wheel speed sensor <FR>output current

Refer to P.35C-179.

Q: Is the check result normal?

YES : Go to Step 6.
NO : Replace the wheel speed sensor <FR> (Refer to P.35C-188). Then go to Step 9.

STEP 6. Check for wheel bearing looseness

NOTE: Loose wheel bearing may increase the gap between the wheel speed sensor <FR> and the wheel speed detection magnet encoder. Check the wheel bearing <FR> for looseness (Refer to GROUP 26 – Wheel Bearing Axial Play Check).

Q: Is the check result normal?

YES : Go to Step 7.
NO : Replace the wheel bearing <FR> (Refer to GROUP 26 – Front Axle Hub Assembly). Then go to Step 10.

www.cargeek.ir

www.CarGeek.ir

STEP 7. Check of wheel speed detection encoder

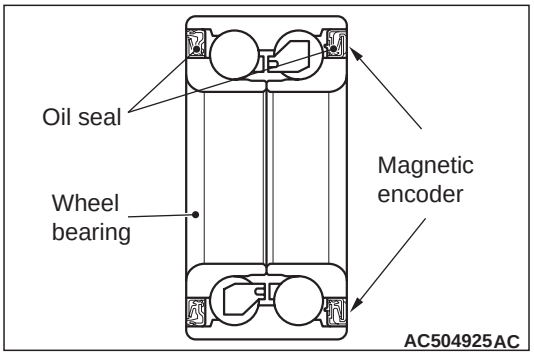

Check the encoder for adhesion of foreign materials or deformation.

Q: Is the check result normal?
YES : Go to Step 8.
NO (Adhesion of foreign materials) : Remove the foreign materials and clean the encoder so as not to disturb the magnetisation pattern on it while taking care of the magnet, magnetic substance, and magnetic attraction. Then go to Step 10.
NO (Deformation) : Replace the wheel bearing <FR> (Refer to GROUP 26 – Front Axle Hub Assembly). Then go to Step 10.

STEP 8. Check whether the diagnosis code is reset.
(1) Erase the diagnosis code.
(2) Drive the vehicle at 20 km/h or higher.
NOTE: The ABS warning lamp does not turn OFF in some cases unless the vehicle runs at 20 km/h or higher.

Q: Is diagnosis code No. C101F set?
YES : Replace the wheel speed sensor <FR> (Refer to P.35C-188). Then go to Step 9.
NO : Intermittent malfunction (Refer to GROUP 00 – How to Use Troubleshooting/How to Cope with Intermittent Malfunctions).

STEP 9. Check whether the diagnosis code is reset.
(1) Erase the diagnosis code.
(2) Drive the vehicle at 20 km/h or higher.
NOTE: The ABS warning lamp does not turn OFF in some cases unless the vehicle runs at 20 km/h or higher.

Q: Is diagnosis code No. C101F set?
YES : Replace the hydraulic unit (integrated with ASC-ECU) (Refer to P.35C-185). Then go to Step 10.
NO : This diagnosis is complete.

STEP 10. Check whether the diagnosis code is reset.
(1) Erase the diagnosis code.
(2) Drive the vehicle at 20 km/h or higher.
NOTE: The ABS warning lamp does not turn OFF in some cases unless the vehicle runs at 20 km/h or higher.

Q: Is diagnosis code No. C101F set?
YES : Return to Step 1.
NO : This diagnosis is complete.

Code No. C102A: Mutual monitoring of RL wheel speed sensor

⚠ CAUTION
- **If there is any problem in the CAN bus lines, an incorrect diagnosis code may be set. Prior to this diagnosis, diagnose the CAN bus lines (Refer to GROUP 54C – CAN Bus Diagnostics Table).**
- **Whenever ECU is replaced, ensure that the CAN bus lines are normal.**
- **When the hydraulic unit (integrated with ASC-ECU) is replaced, always carry out the calibration of the steering wheel sensor, the G and yaw rate sensor and brake fluid pressure sensor (Refer to P.35C-182, P.35C-183 and P.35C-184).**

OPERATION
- The wheel speed sensor is a kind of a pulse generator. It consists of encoders (a plate on which north and south pole sides of the magnets are arranged alternately) for detecting the wheel speed which rotates at the same speed of the wheels and wheel speed sensors. This sensor outputs frequency pulse signals in proportion to the wheel speed.
- The pulse signals, which the wheel speed sensor creates, are sent to ASC-ECU. ASC-ECU uses the frequency of the pulse signals to determine the wheel speed.

www.cargeek.ir

www.CarGeek.ir

DIAGNOSIS CODE SET CONDITIONS

ASC-ECU monitors the signals from each wheel speed sensor while the vehicle is being driven. If any fault below is found in these sensor signals, ASC-ECU will set the relevant diagnosis code.

- Missing wheel speed sensor signal
- Wheel speed sensor signal continuously indicates low value.

PROBABLE CAUSES

Current trouble

- Excessive gap between the wheel speed sensor and the wheel speed detection encoder
- Adhesion of foreign materials on the wheel speed sensor
- Wheel bearing malfunction
- Deformation of the wheel speed detection encoder
- Adhesion of foreign materials on the wheel speed detection encoder
- Malfunction of wheel speed sensor
- Improper installation of the wheel speed sensor
- ASC-ECU malfunction
- The number of poles on the Magnetic encoder for wheel speed detection (N-pole and S-pole) is changed

Past trouble

- When diagnosis code No.C1020 is also set, carry out diagnosis with particular emphasis on wiring harness and connector failures between ASC-ECU and the wheel speed sensor. For diagnosis procedures, refer to How to treat past trouble (GROUP 00 – How to Use Troubleshooting/How to Treat Past Trouble).
- When diagnosis code No.C1020 is not set, the following conditions may be present:
  - Some wheels slip
  - Unstable vehicle attitude
  - External noise interference
  - Vehicle ran with the parking brake applied.
  - Rotate only two wheels with drum tester

DIAGNOSIS PROCEDURE

STEP 1. M.U.T.-III CAN bus diagnosis

Use M.U.T.-III to diagnose the CAN bus lines.

Q: Is the check result normal?

YES : Go to Step 3.

NO : Repair the CAN bus lines (Refer to GROUP 54C – CAN Bus Diagnostics Table). On completion, go to Step 2.

STEP 2. Diagnosis code recheck after resetting CAN bus lines

Q: Is the diagnosis code No.C102A set?

YES : Go to Step 3.

NO : This diagnosis is complete.

STEP 3. M.U.T.-III diagnosis code

Check that the diagnosis code No. C1020 is also set.

Q: Is the diagnosis code No. C1020 also set?

YES : Perform the diagnosis for the diagnosis code No. C1020 (Refer to P.35C-27).

NO : Go to Step 4.

STEP 4. Check for wheel speed sensor <RL> installation

Check how the wheel speed sensor <RL> is installed (Disconnection of wheel speed sensor <RL>, loose mounting bolt, etc.).

Q: Is the check result normal?

YES : Go to Step 5.

NO : Reinstall the wheel speed sensor <RL> correctly (Refer to P.35C-188). Then go to Step 5.

STEP 5. Check for wheel speed sensor <RL> output current

Refer to P.35C-179.

Q: Is the check result normal?

YES : Go to Step 6.

NO : Replace the wheel speed sensor <RL> (Refer to P.35C-188). Then go to Step 9.

STEP 6. Check for wheel bearing looseness

NOTE:

- *Loose wheel bearing may increase the gap between the wheel speed sensor <RL> and the wheel speed detection magnet encoder.*
- *Check the Rear wheel hub assembly <RL> (Refer to GROUP 27 – Wheel Bearing Axial Play Check).*

Q: Is the check result normal?

YES : Go to Step 7.

NO : Replace the rear wheel hub assembly <RL> (Refer to GROUP 27 – Rear axle hub assembly). Then go to Step 10.

www.cargeek.ir

www.CarGeek.ir

STEP 7. Check of wheel speed detection encoder

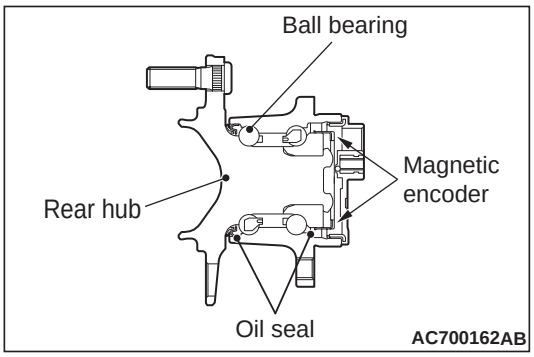

Check the encoder for adhesion of foreign materials or deformation.

Q: Is the check result normal?
YES : Go to Step 8.
NO (Adhesion of foreign materials) : Remove the foreign materials and clean the encoder so as not to disturb the magnetisation pattern on it while taking care of the magnet, magnetic substance, and magnetic attraction.
NO <Deformation> : Replace the rear wheel hub assembly <RL> (Refer to GROUP 27 – Rear axle hub assembly). Then go to Step 10.

STEP 8. Check whether the diagnosis code is reset.
(1) Erase the diagnosis code.
(2) Drive the vehicle at 20 km/h or higher.

NOTE: The ABS warning lamp does not turn OFF in some cases unless the vehicle runs at 20 km/h or higher.

Q: Is diagnosis code No. C102A set?
YES : Replace the wheel speed sensor <RL> (Refer to P.35C-188). Then go to Step 9.
NO : Intermittent malfunction (Refer to GROUP 00 – How to Use Troubleshooting/How to Cope with Intermittent Malfunctions).

STEP 9. Check whether the diagnosis code is reset.
(1) Erase the diagnosis code.
(2) Drive the vehicle at 20 km/h or higher.

NOTE: The ABS warning lamp does not turn OFF in some cases unless the vehicle runs at 20 km/h or higher.

Q: Is diagnosis code No. C102A set?
YES : Replace the hydraulic unit (integrated with ASC-ECU) (Refer to P.35C-185). Then go to Step 10.
NO : This diagnosis is complete.

STEP 10. Check whether the diagnosis code is reset.
(1) Erase the diagnosis code.
(2) Drive the vehicle at 20 km/h or higher.

NOTE: The ABS warning lamp does not turn OFF in some cases unless the vehicle runs at 20 km/h or higher.

Q: Is diagnosis code No. C102A set?
YES : Return to Step 1.
NO : This diagnosis is complete.

Code No. C1035 Mutual monitoring of RR wheel speed sensor

⚠ CAUTION
- **If there is any problem in the CAN bus lines, an incorrect diagnosis code may be set. Prior to this diagnosis, diagnose the CAN bus lines (Refer to GROUP 54C – CAN Bus Diagnostics Table).**
- **Whenever ECU is replaced, ensure that the CAN bus lines are normal.**
- **When the hydraulic unit (integrated with ASC-ECU) is replaced, always carry out the calibration of the steering wheel sensor, the G and yaw rate sensor and brake fluid pressure sensor (Refer to P.35C-182, P.35C-183 and P.35C-184).**

OPERATION
- The wheel speed sensor is a kind of a pulse generator. It consists of encoders (a plate on which north and south pole sides of the magnets are arranged alternately) for detecting the wheel speed which rotates at the same speed of the wheels and wheel speed sensors. This sensor outputs frequency pulse signals in proportion to the wheel speed.
- The pulse signals, which the wheel speed sensor creates, are sent to ASC-ECU. ASC-ECU uses the frequency of the pulse signals to determine the wheel speed.

www.cargeek.ir

www.CarGeek.ir

DIAGNOSIS CODE SET CONDITIONS

ASC-ECU monitors the signals from each wheel speed sensor while the vehicle is being driven. If any fault below is found in these sensor signals, ASC-ECU will set the relevant diagnosis code.

- Missing wheel speed sensor signal
- Wheel speed sensor signal continuously indicates low value.

PROBABLE CAUSES

Current trouble

- Excessive gap between the wheel speed sensor and the wheel speed detection encoder
- Adhesion of foreign materials on the wheel speed sensor
- Wheel bearing malfunction
- Deformation of the wheel speed detection encoder
- Adhesion of foreign materials on the wheel speed detection encoder
- Malfunction of wheel speed sensor
- Improper installation of the wheel speed sensor
- ASC-ECU malfunction
- The number of poles on the Magnetic encoder for wheel speed detection (N-pole and S-pole) is changed

Past trouble

- When diagnosis code No.C102B is also set, carry out diagnosis with particular emphasis on wiring harness and connector failures between ASC-ECU and the wheel speed sensor. For diagnosis procedures, refer to How to treat past trouble (GROUP 00 – How to Use Troubleshooting/How to Treat Past Trouble).
- When diagnosis code No.C102B is not set, the following conditions may be present:
  - Some wheels slip
  - Unstable vehicle attitude
  - External noise interference
  - Vehicle ran with the parking brake applied.
  - Rotate only two wheels with drum tester

DIAGNOSIS PROCEDURE

STEP 1. M.U.T.-III CAN bus diagnosis

Use M.U.T.-III to diagnose the CAN bus lines.

Q: Is the check result normal?

YES : Go to Step 3.

NO : Repair the CAN bus lines (Refer to GROUP 54C – CAN Bus Diagnostics Table). On completion, go to Step 2.

STEP 2. Diagnosis code recheck after resetting CAN bus lines

Q: Is the diagnosis code No.C1035 set?

YES : Go to Step 3.

NO : This diagnosis is complete.

STEP 3. M.U.T.-III diagnosis code

Check that the diagnosis code No. C102B is also set.

Q: Is the diagnosis code No. C102B also set?

YES : Perform the diagnosis for the diagnosis code No. C102B (Refer to P.35C-31).

NO : Go to Step 4.

STEP 4. Check for wheel speed sensor <RR> installation

Check how the wheel speed sensor <RR> is installed (Disconnection of wheel speed sensor <RR>, loose mounting bolt, etc.).

Q: Is the check result normal?

YES : Go to Step 5.

NO : Reinstall the wheel speed sensor <RR> correctly (Refer to P.35C-188). Then go to Step 5.

STEP 5. Check for wheel speed sensor <RR> output current

Refer to P.35C-179.

Q: Is the check result normal?

YES : Go to Step 6.

NO : Replace the wheel speed sensor <RR> (Refer to P.35C-188). Then go to Step 9.

STEP 6. Check for wheel bearing looseness

NOTE:

- *Loose wheel bearing may increase the gap between the wheel speed sensor <RR> and the wheel speed detection magnet encoder.*
- *Check the Rear wheel hub assembly <RR> (Refer to GROUP 27 – Wheel Bearing Axial Play Check).*

Q: Is the check result normal?

YES : Go to Step 7.

NO : Replace the rear wheel hub assembly <RR> (Refer to GROUP 27 – Rear axle hub assembly). Then go to Step 10.

www.cargeek.ir

www.CarGeek.ir

STEP 7. Check of wheel speed detection encoder

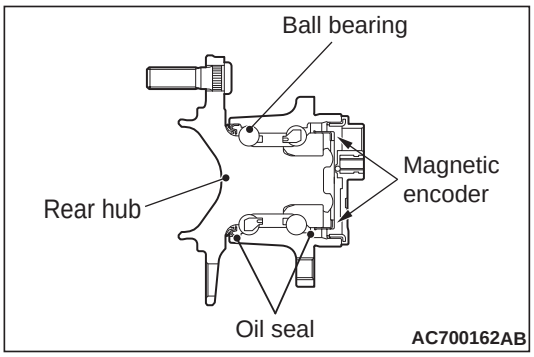

Check the encoder for adhesion of foreign materials or deformation.

Q: Is the check result normal?
YES : Go to Step 8.
NO (Adhesion of foreign materials) : Remove the foreign materials and clean the encoder so as not to disturb the magnetisation pattern on it while taking care of the magnet, magnetic substance, and magnetic attraction.
NO <Deformation> : Replace the rear wheel hub assembly <RR> (Refer to GROUP 27 – Rear axle hub assembly). Then go to Step 10.

STEP 8. Check whether the diagnosis code is reset.
(1) Erase the diagnosis code.
(2) Drive the vehicle at 20 km/h or higher.

NOTE: The ABS warning lamp does not turn OFF in some cases unless the vehicle runs at 20 km/h or higher.

Q: Is diagnosis code No. C1035 set?
YES : Replace the wheel speed sensor <RR> (Refer to P.35C-188). Then go to Step 9.
NO : Intermittent malfunction (Refer to GROUP 00 – How to Use Troubleshooting/How to Cope with Intermittent Malfunctions).

STEP 9. Check whether the diagnosis code is reset.
(1) Erase the diagnosis code.
(2) Drive the vehicle at 20 km/h or higher.

NOTE: The ABS warning lamp does not turn OFF in some cases unless the vehicle runs at 20 km/h or higher.

Q: Is diagnosis code No. C1035 set?
YES : Replace the hydraulic unit (integrated with ASC-ECU) (Refer to P.35C-185). Then go to Step 10.
NO : This diagnosis is complete.

STEP 10. Check whether the diagnosis code is reset.
(1) Erase the diagnosis code.
(2) Drive the vehicle at 20 km/h or higher.

NOTE: The ABS warning lamp does not turn OFF in some cases unless the vehicle runs at 20 km/h or higher.

Q: Is diagnosis code No. C1035 set?
YES : Return to Step 1.
NO : This diagnosis is complete.

Code No. C1041 Abnormality in periodical signal for FL wheel speed sensor

⚠ CAUTION
- **If there is any problem in the CAN bus lines, an incorrect diagnosis code may be set. Prior to this diagnosis, diagnose the CAN bus lines (Refer to GROUP 54C – CAN Bus Diagnostics Table).**
- **Whenever ECU is replaced, ensure that the CAN bus lines are normal.**
- **When the hydraulic unit (integrated with ASC-ECU) is replaced, always carry out the calibration of the steering wheel sensor, the G and yaw rate sensor and brake fluid pressure sensor (Refer to P.35C-182, P.35C-183 and P.35C-184).**

OPERATION
- The wheel speed sensor is a kind of a pulse generator. It consists of encoders (a plate on which north and south pole sides of the magnets are arranged alternately) for detecting the wheel speed which rotates at the same speed of the wheels and wheel speed sensors. This sensor outputs frequency pulse signals in proportion to the wheel speed.
- The pulse signals, which the wheel speed sensor creates, are sent to ASC-ECU. ASC-ECU uses the frequency of the pulse signals to determine the wheel speed.

www.cargeek.ir

www.CarGeek.ir

DIAGNOSIS CODE SET CONDITIONS

ASC-ECU monitors the signals from each wheel speed sensor while the vehicle is being driven. If any fault below is found in these sensor signals, ASC-ECU will set the relevant diagnosis code.

- Missing wheel speed sensor signal
- Wheel speed sensor signal continuously indicates low value.

PROBABLE CAUSES

Current trouble

- Excessive gap between the wheel speed sensor and the wheel speed detection encoder
- Wheel bearing malfunction
- Deformation of the wheel speed detection encoder
- Adhesion of foreign materials on the wheel speed sensor
- Adhesion of foreign materials on the wheel speed detection encoder
- Malfunction of wheel speed sensor
- Improper installation of the wheel speed sensor
- ASC-ECU malfunction
- The number of poles on the Magnetic encoder for wheel speed detection (N-pole and S-pole) is changed

Past trouble

- When diagnosis code No.C100A is also set, carry out diagnosis with particular emphasis on wiring harness and connector failures between ASC-ECU and the wheel speed sensor. For diagnosis procedures, refer to How to treat past trouble (GROUP 00 – How to Use Troubleshooting/How to Treat Past Trouble).
- When diagnosis code No.C100A is not set, the following conditions may be present:
  - Some wheels slip
  - Unstable vehicle attitude
  - External noise interference
  - Vehicle ran with the parking brake applied.
  - Rotate only two wheels with drum tester

DIAGNOSIS PROCEDURE

STEP 1. M.U.T.-III CAN bus diagnosis

Use M.U.T.-III to diagnose the CAN bus lines.

Q: Is the check result normal?

YES : Go to Step 3.
NO : Repair the CAN bus lines (Refer to GROUP 54C – CAN Bus Diagnostics Table). On completion, go to Step 2.

STEP 2. Diagnosis code recheck after resetting CAN bus lines

Q: Is the diagnosis code No.C1041 set?

YES : Go to Step 3.
NO : This diagnosis is complete.

STEP 3. M.U.T.-III diagnosis code

Check that diagnosis code No.C100A is also set.

Q: Is diagnosis code No.C100A also set?

YES : Perform the diagnosis for diagnosis code No.C100A (Refer to P.35C-19).
NO : Go to Step 4.

STEP 4. Check for wheel speed sensor <FL> installation

Check how the wheel speed sensor <FL> is installed (Disconnection of wheel speed sensor <FL>, loose mounting bolt, etc.).

Q: Is the check result normal?

YES : Go to Step 5.
NO : Reinstall the wheel speed sensor <FL> correctly (Refer to P.35C-188). Then go to Step 5.

STEP 5. Check for wheel speed sensor output <FL> current

Refer to P.35C-179.

Q: Is the check result normal?

YES : Go to Step 6.
NO : Replace the wheel speed sensor <FL> (Refer to P.35C-188). Then go to Step 9.

STEP 6. Check for wheel bearing looseness

NOTE: Loose wheel bearing may increase the gap between the wheel speed sensor <FL> and the wheel speed detection magnet encoder. Check the wheel bearing <FL> for looseness (Refer to GROUP 26 – Wheel Bearing Axial Play Check).

Q: Is the check result normal?

YES : Go to Step 7.
NO : Replace the wheel bearing <FL> (Refer to GROUP 26 – Front Axle Hub Assembly). Then go to Step 10.

www.cargeek.ir

www.CarGeek.ir

STEP 7. Check of wheel speed detection encoder

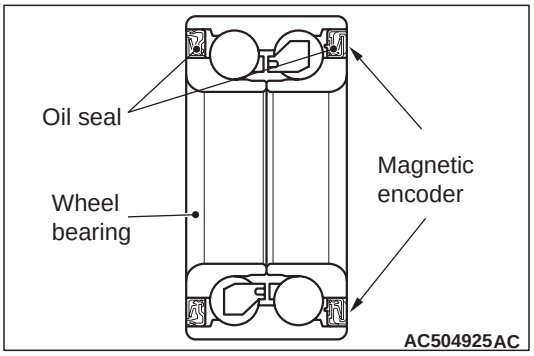

Check the encoder for adhesion of foreign materials or deformation.

Q: Is the check result normal?
YES : Go to Step 8.
NO (Adhesion of foreign materials) : Remove the foreign materials and clean the encoder so as not to disturb the magnetisation pattern on it while taking care of the magnet, magnetic substance, and magnetic attraction. Then go to Step 10.
NO (Deformation) : Replace the wheel bearing <FL> (Refer to GROUP 26 – Front Axle Hub Assembly). Then go to Step 10.

STEP 8. Check whether the diagnosis code is reset.
(1) Erase the diagnosis code.
(2) Drive the vehicle at 20 km/h or higher.

NOTE: The ABS warning lamp does not turn OFF in some cases unless the vehicle runs at 20 km/h or higher.

Q: Is diagnosis code No. C1041 set?
YES : Replace the wheel speed sensor <FL> (Refer to P.35C-188). Then go to Step 9.
NO : Intermittent malfunction (Refer to GROUP 00 – How to Use Troubleshooting/How to Cope with Intermittent Malfunctions).

STEP 9. Check whether the diagnosis code is reset.
(1) Erase the diagnosis code.
(2) Drive the vehicle at 20 km/h or higher.

NOTE: The ABS warning lamp does not turn OFF in some cases unless the vehicle runs at 20 km/h or higher.

Q: Is diagnosis code No. C1041 set?
YES : Replace the hydraulic unit (integrated with ASC-ECU) (Refer to P.35C-185). Then go to Step 10.
NO : This diagnosis is complete.

STEP 10. Check whether the diagnosis code is reset.
(1) Erase the diagnosis code.
(2) Drive the vehicle at 20 km/h or higher.

NOTE: The ABS warning lamp does not turn OFF in some cases unless the vehicle runs at 20 km/h or higher.

Q: Is diagnosis code No. C1041 set?
YES : Return to Step 1.
NO : This diagnosis is complete.

Code No. C1042 Abnormality in periodical signal for FR wheel speed sensor

⚠ CAUTION
- **If there is any problem in the CAN bus lines, an incorrect diagnosis code may be set. Prior to this diagnosis, diagnose the CAN bus lines (Refer to GROUP 54C – CAN Bus Diagnostics Table).**
- **Whenever ECU is replaced, ensure that the CAN bus lines are normal.**
- **When the hydraulic unit (integrated with ASC-ECU) is replaced, always carry out the calibration of the steering wheel sensor, the G and yaw rate sensor and brake fluid pressure sensor (Refer to P.35C-182, P.35C-183 and P.35C-184).**

DIAGNOSIS CODE SET CONDITIONS

ASC-ECU monitors the signals from each wheel speed sensor while the vehicle is being driven. If any fault below is found in these sensor signals, ASC-ECU will set the relevant diagnosis code.
- Missing wheel speed sensor signal
- Wheel speed sensor signal continuously indicates low value.

PROBABLE CAUSES

Current trouble
- Excessive gap between the wheel speed sensor and the wheel speed detection encoder
- Wheel bearing malfunction
- Deformation of the wheel speed detection encoder

www.cargeek.ir

www.CarGeek.ir

- Adhesion of foreign materials on the wheel speed sensor
- Adhesion of foreign materials on the wheel speed detection encoder
- Malfunction of wheel speed sensor
- Improper installation of the wheel speed sensor
- ASC-ECU malfunction
- The number of poles on the Magnetic encoder for wheel speed detection (N-pole and S-pole) is changed

Past trouble

- When diagnosis code No.C1015 is also set, carry out diagnosis with particular emphasis on wiring harness and connector failures between ASC-ECU and the wheel speed sensor. For diagnosis procedures, refer to How to treat past trouble (GROUP 00 – How to Use Troubleshooting/How to Treat Past Trouble).
- When diagnosis code No.C1015 is not set, the following conditions may be present:
  - Some wheels slip
  - Unstable vehicle attitude
  - External noise interference
  - Vehicle ran with the parking brake applied.
  - Rotate only two wheels with drum tester

PROBABLE CAUSES

- Wheel bearing malfunction
- Deformation of the wheel speed detection encoder
- Missing teeth of the wheel speed detection encoder
- Adhesion of foreign materials on the wheel speed detection encoder
- ASC-ECU malfunction
- The number of poles on the Magnetic encoder for wheel speed detection (N-pole and S-pole) is changed

DIAGNOSIS PROCEDURE

STEP 1. M.U.T.-III CAN bus diagnosis

Use M.U.T.-III to diagnose the CAN bus lines.

Q: Is the check result normal?

YES : Go to Step 3.

NO : Repair the CAN bus lines (Refer to GROUP 54C – CAN Bus Diagnostics Table). On completion, go to Step 2.

STEP 2. Diagnosis code recheck after resetting CAN bus lines

Q: Is the diagnosis code No.C1042 set?

YES : Go to Step 3.

NO : This diagnosis is complete.

STEP 3. M.U.T.-III diagnosis code

Check that diagnosis code No.C1015 is also set.

Q: Is diagnosis code No.C1015 also set?

YES : Perform the diagnosis for diagnosis code No.C1015 (Refer to P.35C-23).

NO : Go to Step 4.

STEP 4. Check for wheel speed sensor <FR> installation

Check how the wheel speed sensor <FR> is installed (Disconnection of wheel speed sensor <FR>, loose mounting bolt, etc.).

Q: Is the check result normal?

YES : Go to Step 5.

NO : Reinstall the wheel speed sensor <FR> correctly (Refer to P.35C-188). Then go to Step 5.

STEP 5. Check for wheel speed sensor <FR> output current

Refer to P.35C-179.

Q: Is the check result normal?

YES : Go to Step 6.

NO : Replace the wheel speed sensor <FR> (Refer to P.35C-188). Then go to Step 9.

STEP 6. Check for wheel bearing looseness

NOTE: Loose wheel bearing may increase the gap between the wheel speed sensor <FR> and the wheel speed detection magnet encoder. Check the wheel bearing <FR> for looseness (Refer to GROUP 26 – Wheel Bearing Axial Play Check).

Q: Is the check result normal?

YES : Go to Step 7.

NO : Replace the wheel bearing <FR> (Refer to GROUP 26 – Front Axle Hub Assembly). Then go to Step 10.

www.cargeek.ir

www.CarGeek.ir

STEP 7. Check of wheel speed detection encoder

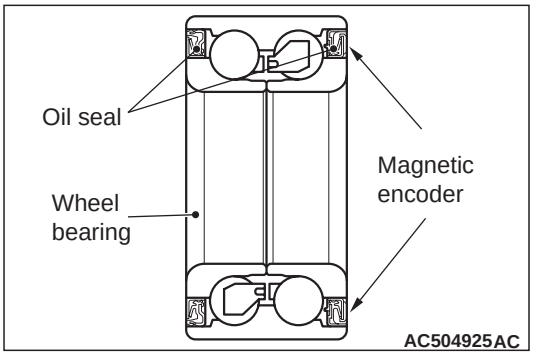

Check the encoder for adhesion of foreign materials or deformation.

Q: Is the check result normal?
YES : Go to Step 8.
NO (Adhesion of foreign materials) : Remove the foreign materials and clean the encoder so as not to disturb the magnetisation pattern on it while taking care of the magnet, magnetic substance, and magnetic attraction. Then go to Step 10.
NO (Deformation) : Replace the wheel bearing <FR> (Refer to GROUP 26 – Front Axle Hub Assembly). Then go to Step 10.

STEP 8. Check whether the diagnosis code is reset.
(1) Erase the diagnosis code.
(2) Drive the vehicle at 20 km/h or higher.

NOTE: The ABS warning lamp does not turn OFF in some cases unless the vehicle runs at 20 km/h or higher.

Q: Is diagnosis code No. C1042 set?
YES : Replace the wheel speed sensor <FR> (Refer to P.35C-188). Then go to Step 9.
NO : Intermittent malfunction (Refer to GROUP 00 – How to Use Troubleshooting/How to Cope with Intermittent Malfunctions).

STEP 9. Check whether the diagnosis code is reset.
(1) Erase the diagnosis code.
(2) Drive the vehicle at 20 km/h or higher.

NOTE: The ABS warning lamp does not turn OFF in some cases unless the vehicle runs at 20 km/h or higher.

Q: Is diagnosis code No. C1042 set?
YES : Replace the hydraulic unit (integrated with ASC-ECU) (Refer to P.35C-185). Then go to Step 10.
NO : This diagnosis is complete.

STEP 10. Check whether the diagnosis code is reset.
(1) Erase the diagnosis code.
(2) Drive the vehicle at 20 km/h or higher.

NOTE: The ABS warning lamp does not turn OFF in some cases unless the vehicle runs at 20 km/h or higher.

Q: Is diagnosis code No. C1042 set?
YES : Return to Step 1.
NO : This diagnosis is complete.

Code No. C1043: Abnormality in periodical signal for RL wheel speed sensor

⚠ CAUTION
- **If there is any problem in the CAN bus lines, an incorrect diagnosis code may be set. Prior to this diagnosis, diagnose the CAN bus lines (Refer to GROUP 54C – CAN Bus Diagnostics Table).**
- **Whenever ECU is replaced, ensure that the CAN bus lines are normal.**
- **When the hydraulic unit (integrated with ASC-ECU) is replaced, always carry out the calibration of the steering wheel sensor, the G and yaw rate sensor and brake fluid pressure sensor (Refer to P.35C-182, P.35C-183 and P.35C-184).**

OPERATION
- The wheel speed sensor is a kind of a pulse generator. It consists of encoders (a plate on which north and south pole sides of the magnets are arranged alternately) for detecting the wheel speed which rotates at the same speed of the wheels and wheel speed sensors. This sensor outputs frequency pulse signals in proportion to the wheel speed.
- The pulse signals, which the wheel speed sensor creates, are sent to ASC-ECU. ASC-ECU uses the frequency of the pulse signals to determine the wheel speed.

www.cargeek.ir

www.CarGeek.ir

DIAGNOSIS CODE SET CONDITIONS

ASC-ECU monitors the signals from each wheel speed sensor while the vehicle is being driven. If any fault below is found in these sensor signals, ASC-ECU will set the relevant diagnosis code.

- Missing wheel speed sensor signal
- Wheel speed sensor signal continuously indicates low value.

PROBABLE CAUSES

Current trouble

- Excessive gap between the wheel speed sensor and the wheel speed detection encoder
- Adhesion of foreign materials on the wheel speed sensor
- Wheel bearing malfunction
- Deformation of the wheel speed detection encoder
- Adhesion of foreign materials on the wheel speed detection encoder
- Malfunction of wheel speed sensor
- Improper installation of the wheel speed sensor
- ASC-ECU malfunction
- The number of poles on the Magnetic encoder for wheel speed detection (N-pole and S-pole) is changed

Past trouble

- When diagnosis code No.C1020 is also set, carry out diagnosis with particular emphasis on wiring harness and connector failures between ASC-ECU and the wheel speed sensor. For diagnosis procedures, refer to How to treat past trouble (GROUP 00 – How to Use Troubleshooting/How to Treat Past Trouble).
- When diagnosis code No.C1020 is not set, the following conditions may be present:
  - Some wheels slip
  - Unstable vehicle attitude
  - External noise interference
  - Vehicle ran with the parking brake applied.
  - Rotate only two wheels with drum tester

DIAGNOSIS PROCEDURE

STEP 1. M.U.T.-III CAN bus diagnosis

Use M.U.T.-III to diagnose the CAN bus lines.

Q: Is the check result normal?

YES : Go to Step 3.

NO : Repair the CAN bus lines (Refer to GROUP 54C – CAN Bus Diagnostics Table). On completion, go to Step 2.

STEP 2. Diagnosis code recheck after resetting CAN bus lines

Q: Is the diagnosis code No.C1043 set?

YES : Go to Step 3.

NO : This diagnosis is complete.

STEP 3. M.U.T.-III diagnosis code

Check that the diagnosis code No. C1020 is also set.

Q: Is the diagnosis code No. C1020 also set?

YES : Perform the diagnosis for the diagnosis code No. C1020 (Refer to P.35C-27).

NO : Go to Step 4.

STEP 4. Check for wheel speed sensor <RL> installation

Check how the wheel speed sensor <RL> is installed (Disconnection of wheel speed sensor <RL>, loose mounting bolt, etc.).

Q: Is the check result normal?

YES : Go to Step 5.

NO : Reinstall the wheel speed sensor <RL> correctly (Refer to P.35C-188). Then go to Step 5.

STEP 5. Check for wheel speed sensor <RL> output current

Refer to P.35C-179.

Q: Is the check result normal?

YES : Go to Step 6.

NO : Replace the wheel speed sensor <RL> (Refer to P.35C-188). Then go to Step 9.

STEP 6. Check for wheel bearing looseness

NOTE:

- *Loose wheel bearing may increase the gap between the wheel speed sensor <RL> and the wheel speed detection magnet encoder.*
- *Check the Rear wheel hub assembly <RL> (Refer to GROUP 27 – Wheel Bearing Axial Play Check).*

Q: Is the check result normal?

YES : Go to Step 7.

NO : Replace the rear wheel hub assembly <RL> (Refer to GROUP 27 – Rear axle hub assembly). Then go to Step 10.

www.cargeek.ir

www.CarGeek.ir

STEP 7. Check of wheel speed detection encoder

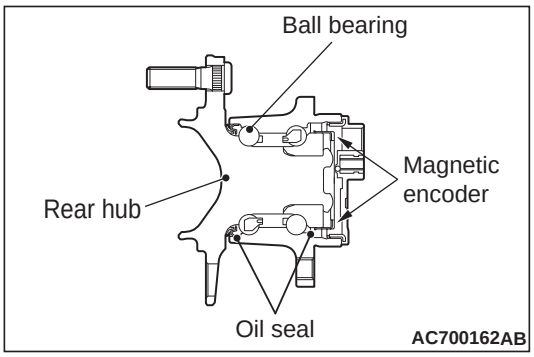

Check the encoder for adhesion of foreign materials or deformation.

Q: Is the check result normal?
YES : Go to Step 8.
NO (Adhesion of foreign materials) : Remove the foreign materials and clean the encoder so as not to disturb the magnetisation pattern on it while taking care of the magnet, magnetic substance, and magnetic attraction.
NO <Deformation> : Replace the rear wheel hub assembly <RL> (Refer to GROUP 27 – Rear axle hub assembly). Then go to Step 10.

STEP 8. Check whether the diagnosis code is reset.
(1) Erase the diagnosis code.
(2) Drive the vehicle at 20 km/h or higher.

NOTE: The ABS warning lamp does not turn OFF in some cases unless the vehicle runs at 20 km/h or higher.

Q: Is diagnosis code No. C1043 set?
YES : Replace the wheel speed sensor (Refer to P.35C-188). Then go to Step 9.
NO : Intermittent malfunction (Refer to GROUP 00 – How to Use Troubleshooting/How to Cope with Intermittent Malfunctions).

STEP 9. Check whether the diagnosis code is reset.
(1) Erase the diagnosis code.
(2) Drive the vehicle at 20 km/h or higher.

NOTE: The ABS warning lamp does not turn OFF in some cases unless the vehicle runs at 20 km/h or higher.

Q: Is diagnosis code No. C1043 set?
YES : Replace the hydraulic unit (integrated with ASC-ECU) (Refer to P.35C-185). Then go to Step 10.
NO : This diagnosis is complete.

STEP 10. Check whether the diagnosis code is reset.
(1) Erase the diagnosis code.
(2) Drive the vehicle at 20 km/h or higher.

NOTE: The ABS warning lamp does not turn OFF in some cases unless the vehicle runs at 20 km/h or higher.

Q: Is diagnosis code No. C1043 set?
YES : Return to Step 1.
NO : This diagnosis is complete.

Code No. C1044 Abnormality in periodical signal for RR wheel speed sensor

⚠ CAUTION
- **If there is any problem in the CAN bus lines, an incorrect diagnosis code may be set. Prior to this diagnosis, diagnose the CAN bus lines (Refer to GROUP 54C – CAN Bus Diagnostics Table).**
- **Whenever ECU is replaced, ensure that the CAN bus lines are normal.**
- **When the hydraulic unit (integrated with ASC-ECU) is replaced, always carry out the calibration of the steering wheel sensor, the G and yaw rate sensor and brake fluid pressure sensor (Refer to P.35C-182, P.35C-183 and P.35C-184).**

OPERATION
- The wheel speed sensor is a kind of a pulse generator. It consists of encoders (a plate on which north and south pole sides of the magnets are arranged alternately) for detecting the wheel speed which rotates at the same speed of the wheels and wheel speed sensors. This sensor outputs frequency pulse signals in proportion to the wheel speed.
- The pulse signals, which the wheel speed sensor creates, are sent to ASC-ECU. ASC-ECU uses the frequency of the pulse signals to determine the wheel speed.

www.cargeek.ir

www.CarGeek.ir

DIAGNOSIS CODE SET CONDITIONS

ASC-ECU monitors the signals from each wheel speed sensor while the vehicle is being driven. If any fault below is found in these sensor signals, ASC-ECU will set the relevant diagnosis code.

- Missing wheel speed sensor signal
- Wheel speed sensor signal continuously indicates low value.

PROBABLE CAUSES

Current trouble

- Excessive gap between the wheel speed sensor and the wheel speed detection encoder
- Adhesion of foreign materials on the wheel speed sensor
- Wheel bearing malfunction
- Deformation of the wheel speed detection encoder
- Adhesion of foreign materials on the wheel speed detection encoder
- Malfunction of wheel speed sensor
- Improper installation of the wheel speed sensor
- ASC-ECU malfunction
- The number of poles on the Magnetic encoder for wheel speed detection (N-pole and S-pole) is changed

Past trouble

- When diagnosis code No.C102B is also set, carry out diagnosis with particular emphasis on wiring harness and connector failures between ASC-ECU and the wheel speed sensor. For diagnosis procedures, refer to How to treat past trouble (GROUP 00 – How to Use Troubleshooting/How to Treat Past Trouble).
- When diagnosis code No.C102B is not set, the following conditions may be present:
  - Some wheels slip
  - Unstable vehicle attitude
  - External noise interference
  - Vehicle ran with the parking brake applied.
  - Rotate only two wheels with drum tester

DIAGNOSIS PROCEDURE

STEP 1. M.U.T.-III CAN bus diagnosis

Use M.U.T.-III to diagnose the CAN bus lines.

Q: Is the check result normal?

YES : Go to Step 3.

NO : Repair the CAN bus lines (Refer to GROUP 54C – CAN Bus Diagnostics Table). On completion, go to Step 2.

STEP 2. Diagnosis code recheck after resetting CAN bus lines

Q: Is the diagnosis code No.C1044 set?

YES : Go to Step 3.

NO : This diagnosis is complete.

STEP 3. M.U.T.-III diagnosis code

Check that the diagnosis code No. C102B is also set.

Q: Is the diagnosis code No. C102B also set?

YES : Perform the diagnosis for the diagnosis code No. C102B (Refer to P.35C-31).

NO : Go to Step 4.

STEP 4. Check for wheel speed sensor <RR> installation

Check how the wheel speed sensor <RR> is installed (Disconnection of wheel speed sensor <RR>, loose mounting bolt, etc.).

Q: Is the check result normal?

YES : Go to Step 5.

NO : Reinstall the wheel speed sensor <RR> correctly (Refer to P.35C-188). Then go to Step 5.

STEP 5. Check for wheel speed sensor <RR> output current

Refer to P.35C-179.

Q: Is the check result normal?

YES : Go to Step 6.

NO : Replace the wheel speed sensor <RR> (Refer to P.35C-188). Then go to Step 9.

STEP 6. Check for wheel bearing looseness

NOTE:

- *Loose wheel bearing may increase the gap between the wheel speed sensor <RR> and the wheel speed detection magnet encoder.*
- *Check the Rear wheel hub assembly <RR> (Refer to GROUP 27 – Wheel Bearing Axial Play Check).*

Q: Is the check result normal?

YES : Go to Step 7.

NO : Replace the rear wheel hub assembly <RR> (Refer to GROUP 27 – Rear axle hub assembly). Then go to Step 10.

www.cargeek.ir

www.CarGeek.ir

STEP 7. Check of wheel speed detection encoder

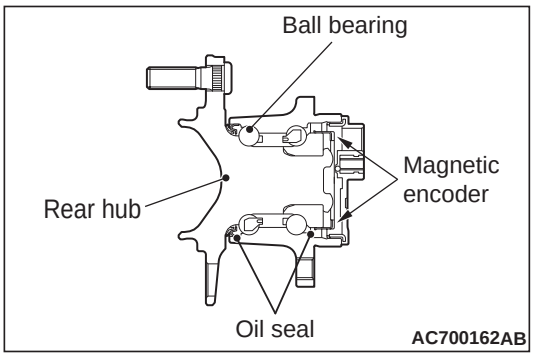

Check the encoder for adhesion of foreign materials or deformation.

Q: Is the check result normal?
YES : Go to Step 8.
NO (Adhesion of foreign materials) : Remove the foreign materials and clean the encoder so as not to disturb the magnetisation pattern on it while taking care of the magnet, magnetic substance, and magnetic attraction.
NO <Deformation> : Replace the rear wheel hub assembly <RR> (Refer to GROUP 27 – Rear axle hub assembly). Then go to Step 10.

STEP 8. Check whether the diagnosis code is reset.
(1) Erase the diagnosis code.
(2) Drive the vehicle at 20 km/h or higher.

NOTE: The ABS warning lamp does not turn OFF in some cases unless the vehicle runs at 20 km/h or higher.

Q: Is diagnosis code No. C1044 set?
YES : Replace the wheel speed sensor <RR> (Refer to P.35C-188). Then go to Step 9.
NO : Intermittent malfunction (Refer to GROUP 00 – How to Use Troubleshooting/How to Cope with Intermittent Malfunctions).

STEP 9. Check whether the diagnosis code is reset.
(1) Erase the diagnosis code.
(2) Drive the vehicle at 20 km/h or higher.

NOTE: The ABS warning lamp does not turn OFF in some cases unless the vehicle runs at 20 km/h or higher.

Q: Is diagnosis code No. C1044 set?
YES : Replace the hydraulic unit (integrated with ASC-ECU) (Refer to P.35C-185). Then go to Step 10.
NO : This diagnosis is complete.

STEP 10. Check whether the diagnosis code is reset.
(1) Erase the diagnosis code.
(2) Drive the vehicle at 20 km/h or higher.

NOTE: The ABS warning lamp does not turn OFF in some cases unless the vehicle runs at 20 km/h or higher.

Q: Is diagnosis code No. C1044 set?
YES : Return to Step 1.
NO : This diagnosis is complete.

www.cargeek.ir

www.CarGeek.ir

Code No. C1046 FL wheel speed sensor control phase time exceeded

Wheel Speed Sensor Circuit

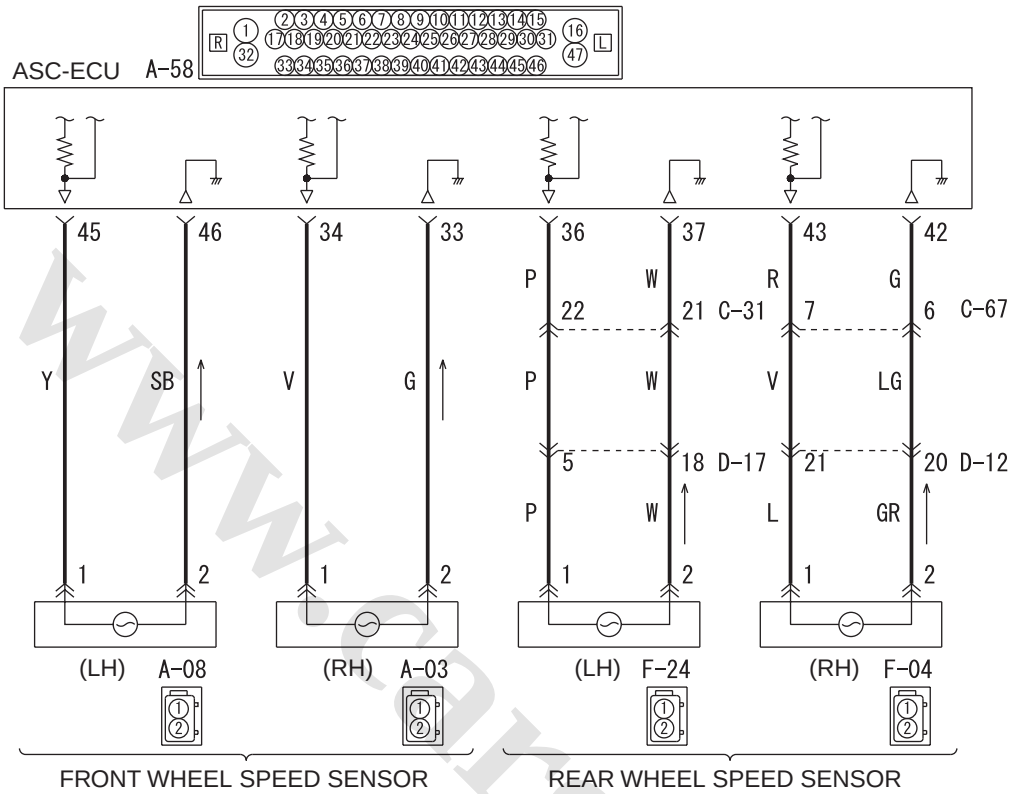

Wire colour code
B : Black LG : Light green G : Green L : Blue W : White Y : Yellow SB : Sky blue
BR : Brown O : Orange GR : Grey R : Red P : Pink V : Violet PU : Purple SI : Silver

ACB02565

Connector: A-08 <LHD>

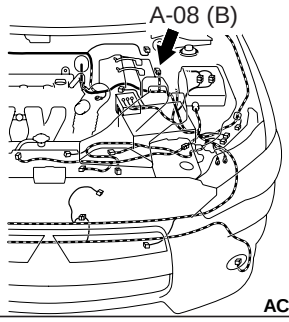

AC612690AP

Connectors: A-08, A-58 <RHD>

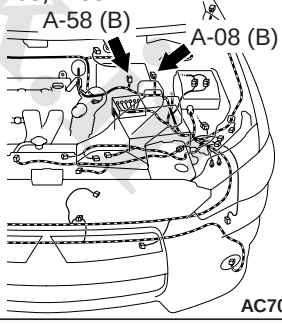

AC701238AE

www.cargeek.ir

www.CarGeek.ir

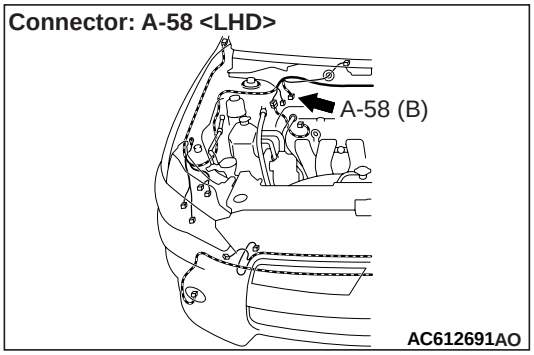

⚠ CAUTION

- **If there is any problem in the CAN bus lines, an incorrect diagnosis code may be set. Prior to this diagnosis, diagnose the CAN bus lines (Refer to GROUP 54C – CAN Bus Diagnostics Table).**
- **Whenever ECU is replaced, ensure that the CAN bus lines are normal.**
- **When the hydraulic unit (integrated with ASC-ECU) is replaced, always carry out the calibration of the steering wheel sensor, the G and yaw rate sensor and brake fluid pressure sensor (Refer to P.35C-182, P.35C-183 and P.35C-184).**

OPERATION

- The wheel speed sensor is a kind of a pulse generator. It consists of encoders (a plate on which north and south pole sides of the magnets are arranged alternately) for detecting the wheel speed which rotates at the same speed of the wheels and wheel speed sensors. This sensor outputs frequency pulse signals in proportion to the wheel speed.
- The pulse signals, which the wheel speed sensor creates, are sent to ASC-ECU. ASC-ECU uses the frequency of the pulse signals to determine the wheel speed.

DIAGNOSIS CODE SET CONDITIONS

This diagnosis code is set if any malfunction below is found:

- When the brake fluid pressure is decreased for a long time.
- When the brake fluid pressure is held for a long time.

PROBABLE CAUSES

- Damaged wiring harness and connectors
- External noise interference
- Malfunction of wheel speed sensor
- ASC-ECU malfunction
- Excessive gap between the wheel speed sensor and the magnetic encoder for wheel speed detection
- Adhesion of foreign materials on the wheel speed sensor
- Adhesion of foreign materials on the magnetic encoder for wheel speed detection
- Wheel bearing malfunction
- Improper installation of the wheel speed sensor
- Deformation of the magnetic encoder for wheel speed detection
- Disturbance of magnetization pattern for magnetic encoder for wheel speed detection
- Missing teeth of the magnetic encoder for wheel speed detection

DIAGNOSTIC PROCEDURE

STEP 1. M.U.T.-III CAN bus diagnosis

Use M.U.T.-III to diagnose the CAN bus lines.

Q: Is the check result normal?

YES : Go to Step 3.

NO : Repair the CAN bus lines (Refer to GROUP 54C – CAN Bus Diagnostics Table). On completion, go to Step 2.

STEP 2. Diagnosis code recheck after resetting CAN bus lines

Q: Is the diagnosis code No.C1046 set?

YES : Go to Step 3.

NO : This diagnosis is complete.

STEP 3. M.U.T.-III diagnosis code

Check that the diagnosis codes No.C100A, C1011, C1014, and C1041 are also set.

Q: Are the diagnosis codes No.C100A, C1011, C1014, and C1041 also set?

YES : Carry out the diagnosis for the relevant diagnosis codes.

NO : Go to Step 4.

STEP 4. M.U.T.-III data list

Check the following data list (Refer to P.35C-172).

- Item No.01: FL wheel speed sensor

Q: Is the check result normal?

YES : Go to Step 11.

NO : Go to Step 5.

www.cargeek.ir

www.CarGeek.ir

STEP 5. Connector check: A-58 ASC-ECU connector, A-08 front wheel speed sensor <LH> connector

Q: Is the check result normal?
YES : Go to Step 6.
NO : Repair the defective connector. Then go to Step 13.

STEP 6. Wiring harness check between A-58 ASC-ECU connector terminal No.45 and A-08 front wheel speed sensor <LH> connector terminal No.1 and between A-58 ASC-ECU connector terminal No.46 and A-08 front wheel speed sensor <LH> connector terminal No.2.

Q: Is the check result normal?
YES : Go to Step 7.
NO : Repair the wiring harness. Then go to Step 13.

STEP 7. Check for wheel speed sensor <FL> installation
Check how the wheel speed sensor <FL> is installed (Disconnection of wheel speed sensor <FL>, loose mounting bolt, etc.).

Q: Is the check result normal?
YES : Go to Step 8.
NO : Reinstall the wheel speed sensor <FL> correctly (Refer to P.35C-188). Then go to Step 8.

STEP 8. Check for wheel speed sensor <FL> output current
Refer to P.35C-179.

Q: Is the check result normal?
YES : Go to Step 9.
NO : Replace the wheel speed sensor <FL> (Refer to P.35C-188). Then go to Step 12.

STEP 9. Check for wheel bearing looseness

NOTE: Loose wheel bearing may increase the gap between the wheel speed sensor <FL> and the wheel speed detection magnet encoder. Check the wheel bearing <FL> for looseness. (Refer to GROUP 26 – Wheel Bearing Axial Play Check .)

Q: Is the check result normal?
YES : Go to Step 10.
NO : Replace the wheel bearing <FL> (Refer to GROUP 26 – Front Axle Hub Assembly). Then go to Step 13.

STEP 10. Check of wheel speed detection encoder

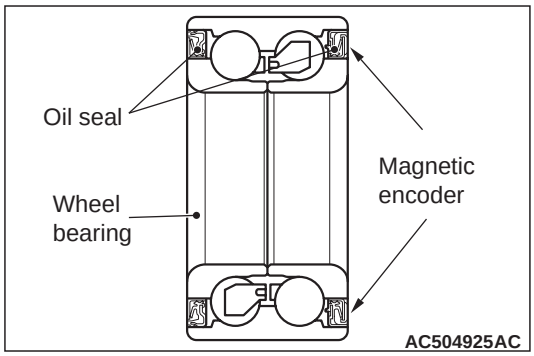

Check the encoder for adhesion of foreign materials or deformation.

Q: Is the check result normal?
YES : Go to Step 11.
NO (Adhesion of foreign materials) : Remove the foreign materials and clean the encoder so as not to disturb the magnetization pattern on it while taking care of the magnet, magnetic substance, and magnetic attraction. Then go to Step 13.
NO (Deformation) : Replace the wheel bearing <FL> (Refer to GROUP 26 – Front Axle Hub Assembly). Then go to Step 13.

STEP 11. Check whether the diagnosis code is reset.
(1) Erase the diagnosis code.
(2) Drive the vehicle at 20 km/h or higher.

NOTE: The ABS warning lamp does not turn OFF in some cases unless the vehicle runs at 20 km/h or higher.

Q: Is the diagnosis code No.C1046 set?
YES : Replace the wheel speed sensor <FL> (Refer to P.35C-188). Then go to Step 12.
NO : Intermittent malfunction (Refer to GROUP 00 – How to Use Troubleshooting/How to Cope with Intermittent Malfunctions).

STEP 12. Check whether the diagnosis code is reset.
(1) Erase the diagnosis code.
(2) Drive the vehicle at 20 km/h or higher.

NOTE: The ABS warning lamp does not turn OFF in some cases unless the vehicle runs at 20 km/h or higher.

Q: Is the diagnosis code No.C1046 set?

www.cargeek.ir

www.CarGeek.ir

YES : Replace the hydraulic unit (integrated with ASC-ECU) (Refer to P.35C-185). Then go to Step 13.
NO : This diagnosis is complete.

STEP 13. Check whether the diagnosis code is reset.
(1) Erase the diagnosis code.
(2) Drive the vehicle at 20 km/h or higher.
NOTE: The ABS warning lamp does not turn OFF in some cases unless the vehicle runs at 20 km/h or higher.

Q: Is the diagnosis code No.C1046 set?
YES : Return to Step 1.
NO : This diagnosis is complete.

Code No. C1047 FR wheel speed sensor control phase time exceeded

Wheel Speed Sensor Circuit

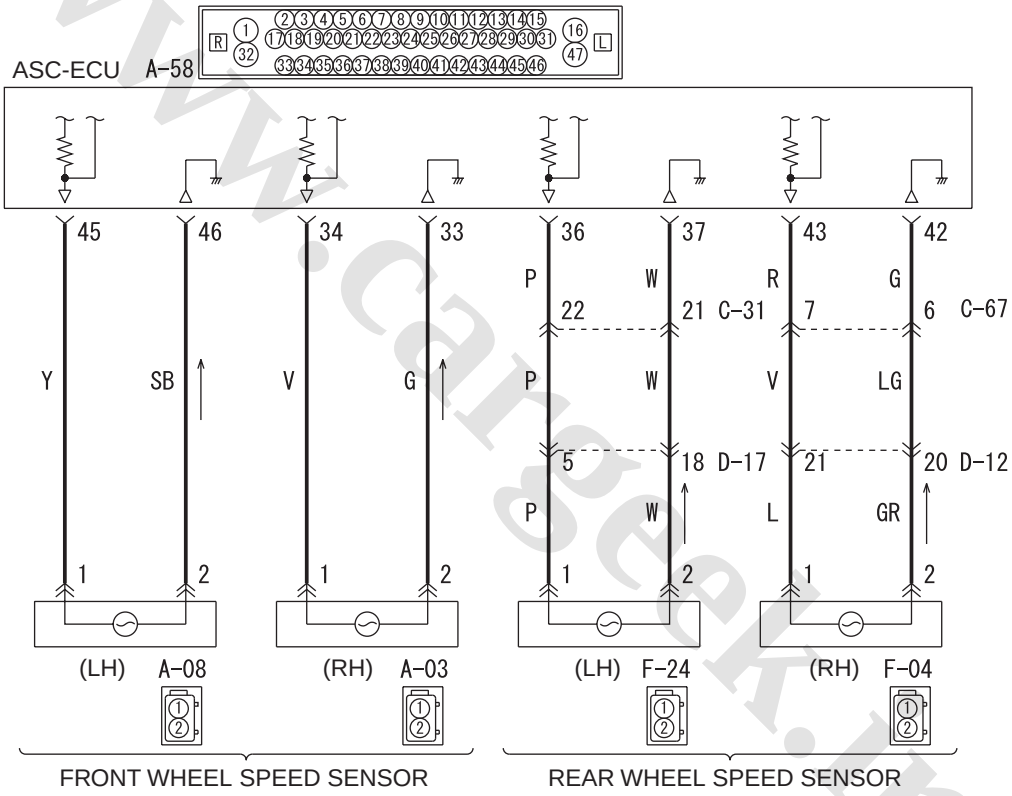

Wire colour code
B : Black LG : Light green G : Green L : Blue W : White Y : Yellow SB : Sky blue
BR : Brown O : Orange GR : Grey R : Red P : Pink V : Violet PU : Purple SI : Silver

ACB02565

www.cargeek.ir

www.CarGeek.ir

Connectors: A-03, A-58 <LHD>

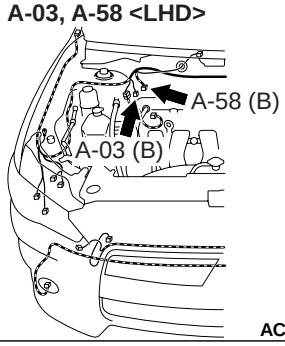

Connector: A-03 <RHD>

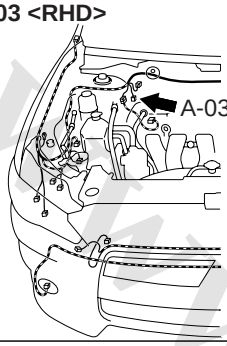

Connector: A-58 <RHD>

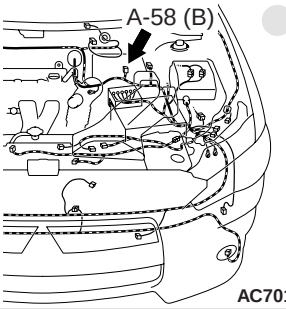

⚠ CAUTION

- **If there is any problem in the CAN bus lines, an incorrect diagnosis code may be set. Prior to this diagnosis, diagnose the CAN bus lines (Refer to GROUP 54C – CAN Bus Diagnostics Table).**
- **Whenever ECU is replaced, ensure that the CAN bus lines are normal.**
- **When the hydraulic unit (integrated with ASC-ECU) is replaced, always carry out the calibration of the steering wheel sensor, the G and yaw rate sensor and brake fluid pressure sensor (Refer to P.35C-182, P.35C-183 and P.35C-184).**

OPERATION

- The wheel speed sensor is a kind of a pulse generator. It consists of encoders (a plate on which north and south pole sides of the magnets are arranged alternately) for detecting the wheel speed which rotates at the same speed of the wheels and wheel speed sensors. This sensor outputs frequency pulse signals in proportion to the wheel speed.
- The pulse signals, which the wheel speed sensor creates, are sent to ASC-ECU. ASC-ECU uses the frequency of the pulse signals to determine the wheel speed.

DIAGNOSIS CODE SET CONDITIONS

This diagnosis code is set if any malfunction below is found:

- When the brake fluid pressure is decreased for a long time.
- When the brake fluid pressure is held for a long time.

PROBABLE CAUSES

- Damaged wiring harness and connectors
- External noise interference
- Malfunction of wheel speed sensor
- ASC-ECU malfunction
- Excessive gap between the wheel speed sensor and the magnetic encoder for wheel speed detection
- Adhesion of foreign materials on the wheel speed sensor
- Adhesion of foreign materials on the magnetic encoder for wheel speed detection
- Wheel bearing malfunction
- Improper installation of the wheel speed sensor
- Deformation of the magnetic encoder for wheel speed detection
- Disturbance of magnetization pattern for magnetic encoder for wheel speed detection

www.cargeek.ir

www.CarGeek.ir

- Missing teeth of the magnetic encoder for wheel speed detection

DIAGNOSTIC PROCEDURE

STEP 1. M.U.T.-III CAN bus diagnosis
Use M.U.T.-III to diagnose the CAN bus lines.

Q: Is the check result normal?
YES : Go to Step 3.
NO : Repair the CAN bus lines (Refer to GROUP 54C – CAN Bus Diagnostics Table). On completion, go to Step 2.

STEP 2. Diagnosis code recheck after resetting CAN bus lines

Q: Is the diagnosis code No.C1047 set?
YES : Go to Step 3.
NO : This diagnosis is complete.

STEP 3. M.U.T.-III diagnosis code
Check that the diagnosis codes No.C1015, C101C, C101F, and C1042 are also set.

Q: Are the diagnosis codes No.C1015, C101C, C101F, and C1042 also set?
YES : Carry out the diagnosis for the relevant diagnosis codes.
NO : Go to Step 4.

STEP 4. M.U.T.-III data list
Check the following data list (Refer to P.35C-172).
- Item No.02: FR wheel speed sensor

Q: Is the check result normal?
YES : Go to Step 11.
NO : Go to Step 5.

STEP 5. Connector check: A-58 ASC-ECU connector, A-03 front wheel speed sensor <RH> connector

Q: Is the check result normal?
YES : Go to Step 6.
NO : Repair the defective connector. Then go to Step 13.

STEP 6. Wiring harness check between A-58 ASC-ECU connector terminal No.34 and A-03 front wheel speed sensor <RH> connector terminal No.1 and between A-58 ASC-ECU connector terminal No.33 and A-03 front wheel speed sensor <RH> connector terminal No.2.

Q: Is the check result normal?
YES : Go to Step 7.
NO : Repair the wiring harness. Then go to Step 13.

STEP 7. Check for wheel speed sensor <FR> installation
Check how the wheel speed sensor <FR> is installed (Disconnection of wheel speed sensor <FR>, loose mounting bolt, etc.).

Q: Is the check result normal?
YES : Go to Step 8.
NO : Reinstall the wheel speed sensor <FR> correctly (Refer to P.35C-188). Then go to Step 8.

STEP 8. Check for wheel speed sensor <FR> output current
Refer to P.35C-179.

Q: Is the check result normal?
YES : Go to Step 9.
NO : Replace the wheel speed sensor <FR> (Refer to P.35C-188). Then go to Step 12.

STEP 9. Check for wheel bearing looseness
NOTE: Loose wheel bearing may increase the gap between the wheel speed sensor <FR> and the wheel speed detection magnet encoder. Check the wheel bearing <FR> for looseness. (Refer to GROUP 26 – Wheel Bearing Axial Play Check .)

Q: Is the check result normal?
YES : Go to Step 10.
NO : Replace the wheel bearing <FR> (Refer to GROUP 26 – Front Axle Hub Assembly). Then go to Step 13.

STEP 10. Check of wheel speed detection encoder

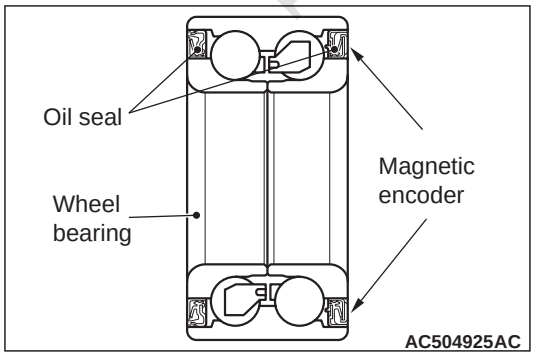

Check the encoder for adhesion of foreign materials or deformation.

Q: Is the check result normal?

www.cargeek.ir

www.CarGeek.ir

YES : Go to Step 11.
NO (Adhesion of foreign materials) : Remove the foreign materials and clean the encoder so as not to disturb the magnetization pattern on it while taking care of the magnet, magnetic substance, and magnetic attraction. Then go to Step 13.
NO (Deformation) : Replace the wheel bearing <FR> (Refer to GROUP 26 – Front Axle Hub Assembly). Then go to Step 13.

STEP 11. Check whether the diagnosis code is reset.
(1) Erase the diagnosis code.
(2) Drive the vehicle at 20 km/h or higher.

NOTE: The ABS warning lamp does not turn OFF in some cases unless the vehicle runs at 20 km/h or higher.

Q: Is the diagnosis code No.C1047 set?
YES : Replace the wheel speed sensor <FR> (Refer to P.35C-188). Then go to Step 12.
NO : Intermittent malfunction (Refer to GROUP 00 – How to Use Troubleshooting/How to Cope with Intermittent Malfunctions).

STEP 12. Check whether the diagnosis code is reset.
(1) Erase the diagnosis code.
(2) Drive the vehicle at 20 km/h or higher.

NOTE: The ABS warning lamp does not turn OFF in some cases unless the vehicle runs at 20 km/h or higher.

Q: Is the diagnosis code No.C1047 set?
YES : Replace the hydraulic unit (integrated with ASC-ECU) (Refer to P.35C-185). Then go to Step 13.
NO : This diagnosis is complete.

STEP 13. Check whether the diagnosis code is reset.
(1) Erase the diagnosis code.
(2) Drive the vehicle at 20 km/h or higher.

NOTE: The ABS warning lamp does not turn OFF in some cases unless the vehicle runs at 20 km/h or higher.

Q: Is the diagnosis code No.C1047 set?
YES : Return to Step 1.
NO : This diagnosis is complete.

www.cargeek.ir

www.CarGeek.ir

Code No. C1048 RL wheel speed sensor control phase time exceeded

Wheel Speed Sensor Circuit

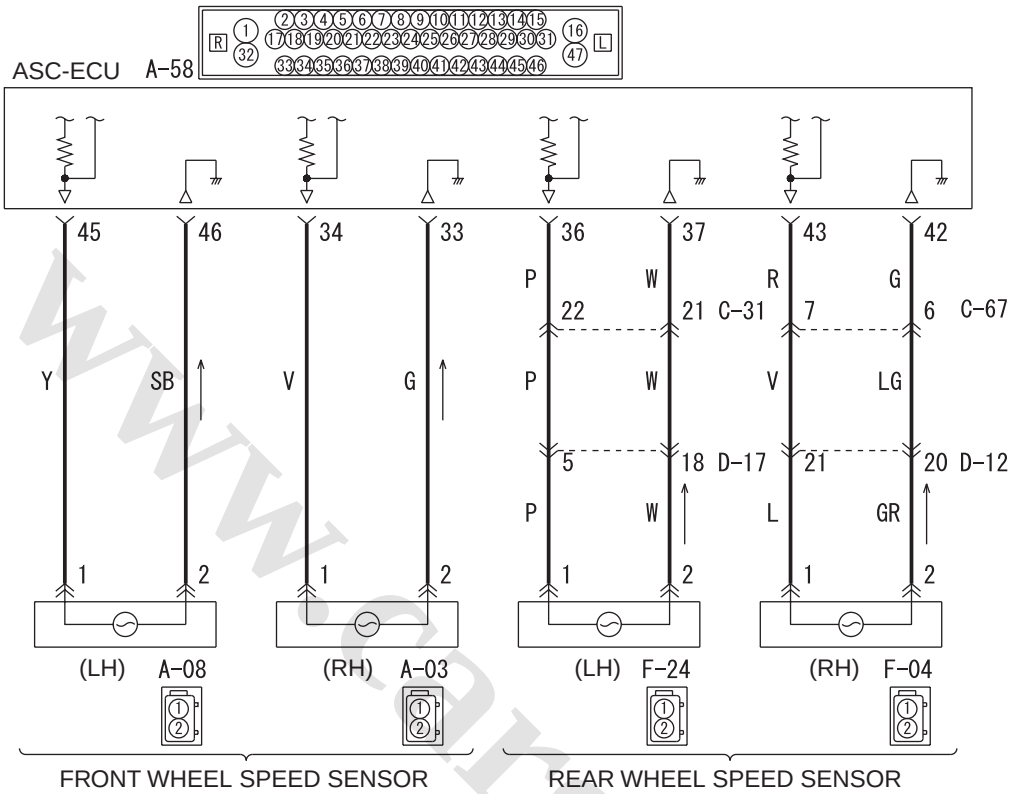

Wire colour code
B : Black LG : Light green G : Green L : Blue W : White Y : Yellow SB : Sky blue
BR : Brown O : Orange GR : Grey R : Red P : Pink V : Violet PU : Purple SI : Silver

ACB02565

Connector: A-58 <LHD>

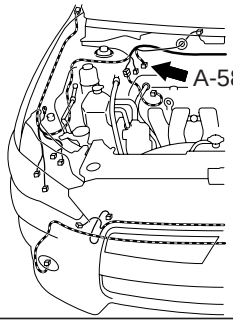

AC612691AO

Connector: A-58 <RHD>

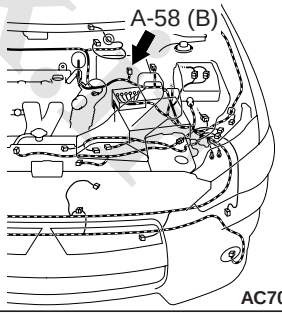

AC701238AF

www.cargeek.ir

www.CarGeek.ir

Connector: C-31 <LHD>

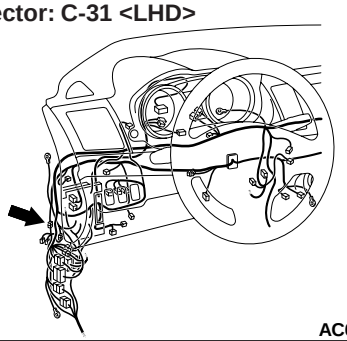

AC612705AF

Connector: C-31 <RHD>

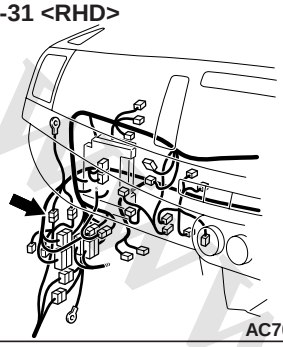

AC701121AM

Connector: D-17

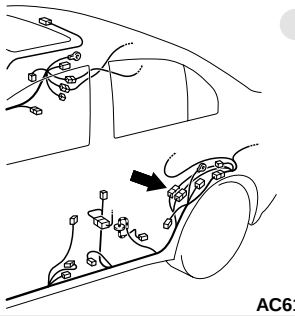

AC612723AU

Connector: F-24 <LANCER>

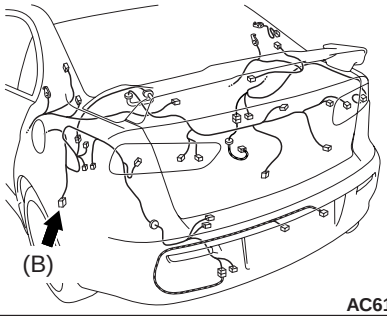

AC612744BH

Connector: F-24 <LANCER SPORTBACK>

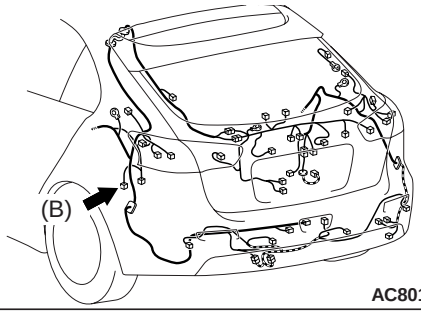

AC801775BM

⚠ CAUTION

- **If there is any problem in the CAN bus lines, an incorrect diagnosis code may be set. Prior to this diagnosis, diagnose the CAN bus lines (Refer to GROUP 54C – CAN Bus Diagnostics Table).**
- **Whenever ECU is replaced, ensure that the CAN bus lines are normal.**
- **When the hydraulic unit (integrated with ASC-ECU) is replaced, always carry out the calibration of the steering wheel sensor, the G and yaw rate sensor and brake fluid pressure sensor (Refer to P.35C-182, P.35C-183 and P.35C-184).**

OPERATION

- The wheel speed sensor is a kind of a pulse generator. It consists of encoders (a plate on which north and south pole sides of the magnets are arranged alternately) for detecting the wheel speed which rotates at the same speed of the wheels and wheel speed sensors. This sensor outputs frequency pulse signals in proportion to the wheel speed.
- The pulse signals, which the wheel speed sensor creates, are sent to ASC-ECU. ASC-ECU uses the frequency of the pulse signals to determine the wheel speed.

DIAGNOSIS CODE SET CONDITIONS

This diagnosis code is set if any malfunction below is found:

- When the brake fluid pressure is decreased for a long time.
- When the brake fluid pressure is held for a long time.

PROBABLE CAUSES

- Damaged wiring harness and connectors
- External noise interference
- Malfunction of wheel speed sensor
- ASC-ECU malfunction
- Excessive gap between the wheel speed sensor and the wheel speed detection encoder
- Adhesion of foreign materials on the wheel speed sensor
- Adhesion of foreign materials on the wheel speed detection encoder
- Wheel bearing malfunction
- Improper installation of the wheel speed sensor
- Deformation of the wheel speed detection encoder
- Disturbance of magnetisation pattern for wheel speed detection encoder

www.cargeek.ir

www.CarGeek.ir

- Missing teeth of the wheel speed detection encoder

DIAGNOSIS PROCEDURE

STEP 1. M.U.T.-III CAN bus diagnosis
Use M.U.T.-III to diagnose the CAN bus lines.

Q: Is the check result normal?
YES : Go to Step 3.
NO : Repair the CAN bus lines (Refer to GROUP 54C – CAN Bus Diagnostics Table). On completion, go to Step 2.

STEP 2. Diagnosis code recheck after resetting CAN bus lines

Q: Is the diagnosis code No.C1048 set?
YES : Go to Step 3.
NO : This diagnosis is complete.

STEP 3. M.U.T.-III diagnosis code
Check that the diagnosis codes No. C1020, C1027, C102A, and C1043 are also set.

Q: Are the diagnosis codes No. C1020, C1027, C102A, and C1043 also set?
YES : Carry out the diagnosis for the relevant diagnosis codes.
NO : Go to Step 4.

STEP 4. M.U.T.-III data list
Check the following data list (Refer to P.35C-172).
- Item No.03: RL wheel speed sensor

Q: Is the check result normal?
YES : Go to Step 11.
NO : Go to Step 5.

STEP 5. Connector check: A-58 ASC-ECU connector, C-31 intermediate connector, D-17 intermediate connector, F-24 rear wheel speed sensor <LH> connector

Q: Is the check result normal?
YES : Go to Step 6.
NO : Repair the defective connector. Then go to Step 13.

STEP 6. Wiring harness check between A-58 ASC-ECU connector terminal No.36 and F-24 rear wheel speed sensor <LH> connector terminal No.1, and between A-58 ASC-ECU connector terminal No.37 and F-24 rear wheel speed sensor <LH> connector terminal No.2.

Q: Is the check result normal?
YES : Go to Step 7.
NO : Repair the wiring harness. Then go to Step 13.

STEP 7. Check for wheel speed sensor <RL> installation
Check how the wheel speed sensor <RL> is installed (Disconnection of wheel speed sensor <RL>, loose mounting bolt, etc.).

Q: Is the check result normal?
YES : Go to Step 8.
NO : Reinstall the wheel speed sensor <RL> correctly (Refer to P.35C-188). Then go to Step 8.

STEP 8. Check for wheel speed sensor <RL> output current
Refer to P.35C-179.

Q: Is the check result normal?
YES : Go to Step 9.
NO : Replace the wheel speed sensor <RL> (Refer to P.35C-188). Then go to Step 12.

STEP 9. Check for wheel bearing looseness

NOTE:
- *Loose wheel bearing may increase the gap between the wheel speed sensor <RL> and the wheel speed detection magnet encoder.*
- *Check the Rear wheel hub assembly <RL> (Refer to GROUP 27 – On-vehicle Service).*

Q: Is the check result normal?
YES : Go to Step 10.
NO : Replace the rear wheel hub assembly <RL> (Refer to GROUP 27 – Rear axle hub assembly). Then go to Step 13.

www.cargeek.ir

www.CarGeek.ir

STEP 10. Check of wheel speed detection encoder

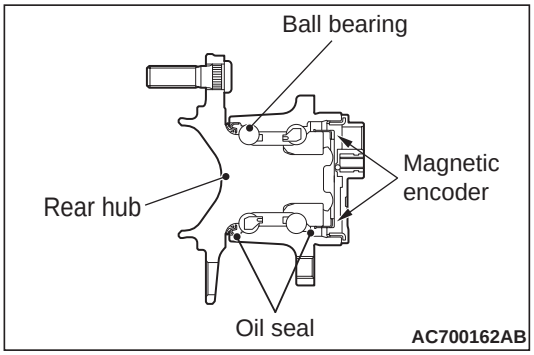

Check the encoder for adhesion of foreign materials or deformation.

Q: Is the check result normal?
YES : Go to Step 11.
NO (Adhesion of foreign materials) : Remove the foreign materials and clean the encoder so as not to disturb the magnetization pattern on it while taking care of the magnet, magnetic substance, and magnetic attraction. Then go to Step 13.
NO <Deformation> : Replace the rear wheel hub assembly <RL> (Refer to GROUP 27 – Rear axle hub assembly). Then go to Step 13.

STEP 11. Check whether the diagnosis code is reset.
(1) Erase the diagnosis code.
(2) Drive the vehicle at 20 km/h or higher.

NOTE: The ABS warning lamp does not turn OFF in some cases unless the vehicle runs at 20 km/h or higher.

Q: Is the diagnosis code No.C1048 set?
YES : Replace the wheel speed sensor <RL> (Refer to P.35C-188). Then go to Step 12.
NO : Intermittent malfunction (Refer to GROUP 00 – How to Use Troubleshooting/How to Cope with Intermittent Malfunctions).

STEP 12. Check whether the diagnosis code is reset.
(1) Erase the diagnosis code.
(2) Drive the vehicle at 20 km/h or higher.

NOTE: The ABS warning lamp does not turn OFF in some cases unless the vehicle runs at 20 km/h or higher.

Q: Is the diagnosis code No.C1048 set?
YES : Replace the hydraulic unit (integrated with ASC-ECU) (Refer to P.35C-185). Then go to Step 13.
NO : This diagnosis is complete.

STEP 13. Check whether the diagnosis code is reset.
(1) Erase the diagnosis code.
(2) Drive the vehicle at 20 km/h or higher.

NOTE: The ABS warning lamp does not turn OFF in some cases unless the vehicle runs at 20 km/h or higher.

Q: Is the diagnosis code No.C1048 set?
YES : Return to Step 1.
NO : This diagnosis is complete.

www.cargeek.ir

www.CarGeek.ir

Code No. C1049 RR wheel speed sensor control phase time exceeded

Wheel Speed Sensor Circuit

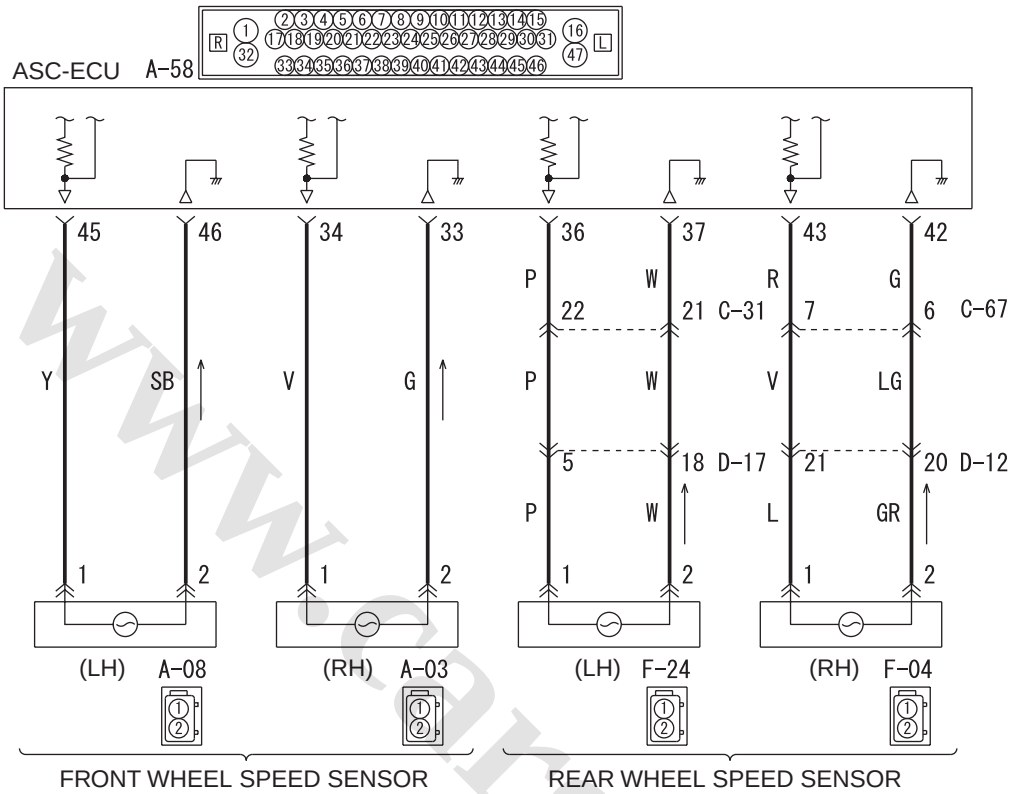

Wire colour code
B : Black LG : Light green G : Green L : Blue W : White Y : Yellow SB : Sky blue
BR : Brown O : Orange GR : Grey R : Red P : Pink V : Violet PU : Purple SI : Silver

ACB02565

Connector: A-58 <LHD>

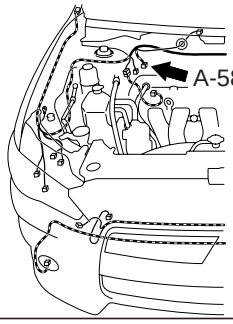

AC612691AO

Connector: A-58 <RHD>

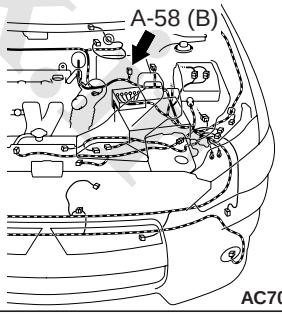

AC701238AF

www.cargeek.ir

www.CarGeek.ir

Connector: C-67 <LHD>

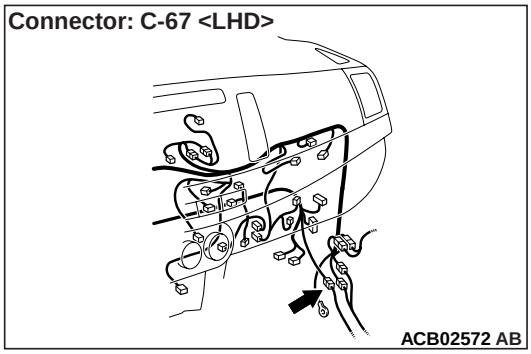

Connector: C-67 <RHD>

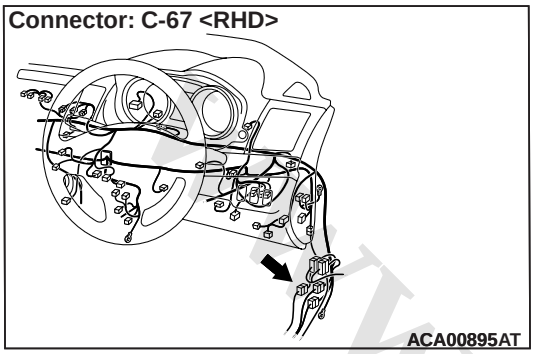

Connector: D-12

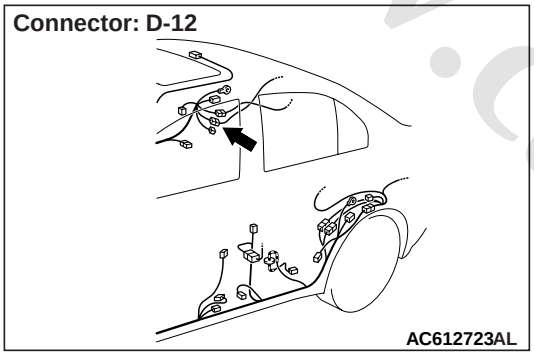

Connector: F-04 <LANCER>

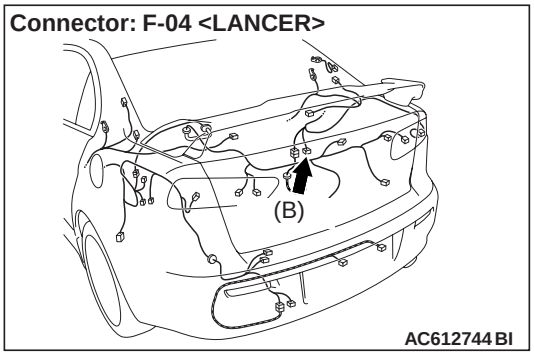

Connector: F-04 <LANCER SPORTBACK>

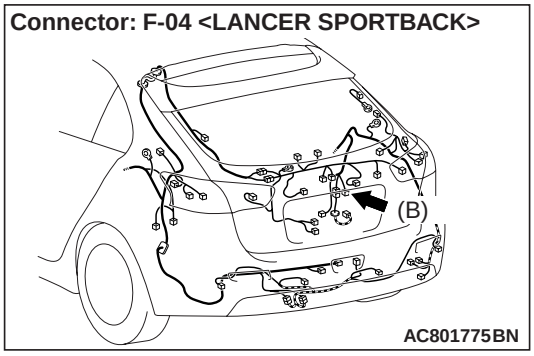

⚠ CAUTION

- **If there is any problem in the CAN bus lines, an incorrect diagnosis code may be set. Prior to this diagnosis, diagnose the CAN bus lines (Refer to GROUP 54C – CAN Bus Diagnostics Table).**
- **Whenever ECU is replaced, ensure that the CAN bus lines are normal.**
- **When the hydraulic unit (integrated with ASC-ECU) is replaced, always carry out the calibration of the steering wheel sensor, the G and yaw rate sensor and brake fluid pressure sensor (Refer to P.35C-182, P.35C-183 and P.35C-184).**

OPERATION

- The wheel speed sensor is a kind of a pulse generator. It consists of encoders (a plate on which north and south pole sides of the magnets are arranged alternately) for detecting the wheel speed which rotates at the same speed of the wheels and wheel speed sensors. This sensor outputs frequency pulse signals in proportion to the wheel speed.
- The pulse signals, which the wheel speed sensor creates, are sent to ASC-ECU. ASC-ECU uses the frequency of the pulse signals to determine the wheel speed.

DIAGNOSIS CODE SET CONDITIONS

This diagnosis code is set if any malfunction below is found:

- When the brake fluid pressure is decreased for a long time.
- When the brake fluid pressure is held for a long time.

PROBABLE CAUSES

- Damaged wiring harness and connectors
- External noise interference
- Malfunction of wheel speed sensor
- ASC-ECU malfunction
- Excessive gap between the wheel speed sensor and the wheel speed detection encoder
- Adhesion of foreign materials on the wheel speed sensor
- Adhesion of foreign materials on the wheel speed detection encoder
- Wheel bearing malfunction
- Improper installation of the wheel speed sensor
- Deformation of the wheel speed detection encoder
- Disturbance of magnetisation pattern for wheel speed detection encoder

www.cargeek.ir

www.CarGeek.ir

- Missing teeth of the wheel speed detection encoder

DIAGNOSIS PROCEDURE

STEP 1. M.U.T.-III CAN bus diagnosis
Use M.U.T.-III to diagnose the CAN bus lines.

Q: Is the check result normal?
YES : Go to Step 3.
NO : Repair the CAN bus lines (Refer to GROUP 54C – CAN Bus Diagnostics Table). On completion, go to Step 2.

STEP 2. Diagnosis code recheck after resetting CAN bus lines

Q: Is the diagnosis code No.C1049 set?
YES : Go to Step 3.
NO : This diagnosis is complete.

STEP 3. M.U.T.-III diagnosis code
Check that the diagnosis codes No. C102B, C1032, C1035, and C1044 are also set.

Q: Are the diagnosis codes No. C102B, C1032, C1035, and C1044 also set?
YES : Carry out the diagnosis for the relevant diagnosis codes.
NO : Go to Step 4.

STEP 4. M.U.T.-III data list
Check the following data list (Refer to P.35C-172).
- Item No.04: RR wheel speed sensor

Q: Is the check result normal?
YES : Go to Step 11.
NO : Go to Step 5.

STEP 5. Connector check: A-58 ASC-ECU connector, C-67 intermediate connector, D-12 intermediate connector, F-04 rear wheel speed sensor <RH> connector

Q: Is the check result normal?
YES : Go to Step 6.
NO : Repair the defective connector. Then go to Step 13.

STEP 6. Wiring harness check between A-58 ASC-ECU connector terminal No.43 and F-04 rear wheel speed sensor <RH> connector terminal No.1, and between A-58 ASC-ECU connector terminal No.42 and F-04 rear wheel speed sensor <RH> connector terminal No.2.

Q: Is the check result normal?
YES : Go to Step 7.
NO : Repair the wiring harness. Then go to Step 13.

STEP 7. Check for wheel speed sensor <RR> installation
Check how the wheel speed sensor <RR> is installed (Disconnection of wheel speed sensor <RR>, loose mounting bolt, etc.).

Q: Is the check result normal?
YES : Go to Step 8.
NO : Reinstall the wheel speed sensor <RR> correctly (Refer to P.35C-188). Then go to Step 8.

STEP 8. Check for wheel speed sensor <RR> output current
Refer to P.35C-179.

Q: Is the check result normal?
YES : Go to Step 9.
NO : Replace the wheel speed sensor <RR> (Refer to P.35C-188). Then go to Step 12.

STEP 9. Check for wheel bearing looseness

NOTE:
- *Loose wheel bearing may increase the gap between the wheel speed sensor <RR> and the wheel speed detection magnet encoder.*
- *Check the Rear wheel hub assembly <RR> (Refer to GROUP 27 – On-vehicle Service).*

Q: Is the check result normal?
YES : Go to Step 10.
NO : Replace the rear wheel hub assembly <RR> (Refer to GROUP 27 – Rear axle hub assembly). Then go to Step 13.

www.cargeek.ir

www.CarGeek.ir

STEP 10. Check of wheel speed detection encoder

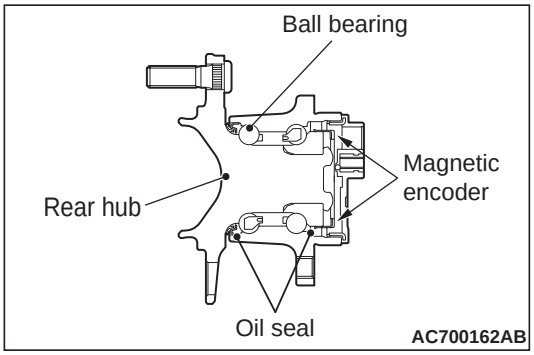

Check the encoder for adhesion of foreign materials or deformation.

Q: Is the check result normal?
YES : Go to Step 11.
NO (Adhesion of foreign materials) : Remove the foreign materials and clean the encoder so as not to disturb the magnetization pattern on it while taking care of the magnet, magnetic substance, and magnetic attraction. Then go to Step 13.
NO <Deformation> : Replace the rear wheel hub assembly <RR> (Refer to GROUP 27 – Rear axle hub assembly). Then go to Step 13.

STEP 11. Check whether the diagnosis code is reset.
(1) Erase the diagnosis code.
(2) Drive the vehicle at 20 km/h or higher.

NOTE: The ABS warning lamp does not turn OFF in some cases unless the vehicle runs at 20 km/h or higher.

Q: Is the diagnosis code No.C1049 set?
YES : Replace the wheel speed sensor <RR> (Refer to P.35C-188). Then go to Step 12.
NO : Intermittent malfunction (Refer to GROUP 00 – How to Use Troubleshooting/How to Cope with Intermittent Malfunctions).

STEP 12. Check whether the diagnosis code is reset.
(1) Erase the diagnosis code.
(2) Drive the vehicle at 20 km/h or higher.

NOTE: The ABS warning lamp does not turn OFF in some cases unless the vehicle runs at 20 km/h or higher.

Q: Is the diagnosis code No.C1049 set?
YES : Replace the hydraulic unit (integrated with ASC-ECU) (Refer to P.35C-185). Then go to Step 13.
NO : This diagnosis is complete.

STEP 13. Check whether the diagnosis code is reset.
(1) Erase the diagnosis code.
(2) Drive the vehicle at 20 km/h or higher.

NOTE: The ABS warning lamp does not turn OFF in some cases unless the vehicle runs at 20 km/h or higher.

Q: Is the diagnosis code No.C1049 set?
YES : Return to Step 1.
NO : This diagnosis is complete.

www.cargeek.ir

www.CarGeek.ir

Code No. C104B Abnormality in FL wheel inlet valve system
Code No. C104F Abnormality in FR wheel inlet valve system
Code No. C1053 Abnormality in RL wheel inlet valve system
Code No. C1057 Abnormality in RR wheel inlet valve system
Code No. C105F Abnormality in FL wheel outlet valve system
Code No. C1063 Abnormality in FR wheel outlet valve system
Code No. C1067 Abnormality in RL wheel outlet valve system
Code No. C105B Abnormality in RR wheel outlet valve system
Code No. C1200 Abnormality in FL/RR wheel cut valve system
Code No. C1204 Abnormality in FR/RL wheel cut valve system
Code No. C1208 Abnormality in FL/RR wheel suction valve system
Code No. C120C Abnormality in FR/RL wheel suction valve system

⚠ CAUTION

- **If there is any problem in the CAN bus lines, an incorrect diagnosis code may be set. Prior to this diagnosis, diagnose the CAN bus lines (Refer to GROUP 54C – CAN Bus Diagnostics Table).**
- **Whenever ECU is replaced, ensure that the CAN bus lines are normal.**
- **When the hydraulic unit (integrated with ASC-ECU) is replaced, always carry out the calibration of the steering wheel sensor, the G and yaw rate sensor and brake fluid pressure sensor (Refer to P.35C-182, P.35C-183 and P.35C-184).**

OPERATION

- ASC-ECU contains the power supply circuit (terminal No. 32) for the solenoid valve. The solenoid valve is energised by the valve relay, which is incorporated in ASC-ECU.
- The valve relay, which is incorporated in ASC-ECU, is always energising the solenoid valve unless the initial check is in progress when the ignition switch is turned on, or the recurrent system check is in progress.
- ASC-ECU activates the solenoid valve by turning on its driving transistor.

DIAGNOSIS CODE SET CONDITIONS

These diagnosis codes will be set under the cases below:

- The solenoid valve is not energized even after ASC-ECU has turned on the driving transistor (Open circuit is present in the power supply circuit to the ASC-ECU solenoid valve, or the valve relay has failed).
- After ASC-ECU has turned off the driving transistor, the solenoid valve still remains energized (short in the solenoid valve circuit).
- When a solenoid valve failure is detected

PROBABLE CAUSES

- ASC-ECU malfunction

DIAGNOSIS PROCEDURE

STEP 1. M.U.T.-III CAN bus diagnosis

Use M.U.T.-III to diagnose the CAN bus lines.

Q: Is the check result normal?
YES : Go to Step 3.
NO : Repair the CAN bus lines (Refer to GROUP 54C – CAN Bus Diagnostics Table). On completion, go to Step 2.

STEP 2. Diagnosis code recheck after resetting CAN bus lines

Q: Is the relevant diagnosis code set?
YES : Go to Step 3.
NO : This diagnosis is complete.

STEP 3. Check whether the diagnosis code is reset.

Erase the diagnosis code.

Q: Is the relevant diagnosis code set?
YES : Replace the hydraulic unit (integrated with ASC-ECU) (Refer to P.35C-185). Then go to Step 4.
NO : Intermittent malfunction (Refer to GROUP 00 – How to Use Troubleshooting/How to Cope with Intermittent Malfunctions).

STEP 4. Check whether the diagnosis code is reset.

Erase the diagnosis code.

Q: Is the relevant diagnosis code set?
YES : Return to Step 1.
NO : This diagnosis is complete.

www.cargeek.ir

www.CarGeek.ir

Code No. C2104 Faulty valve power supply circuit

Solenoid Valve and Motor Power Source Circuit

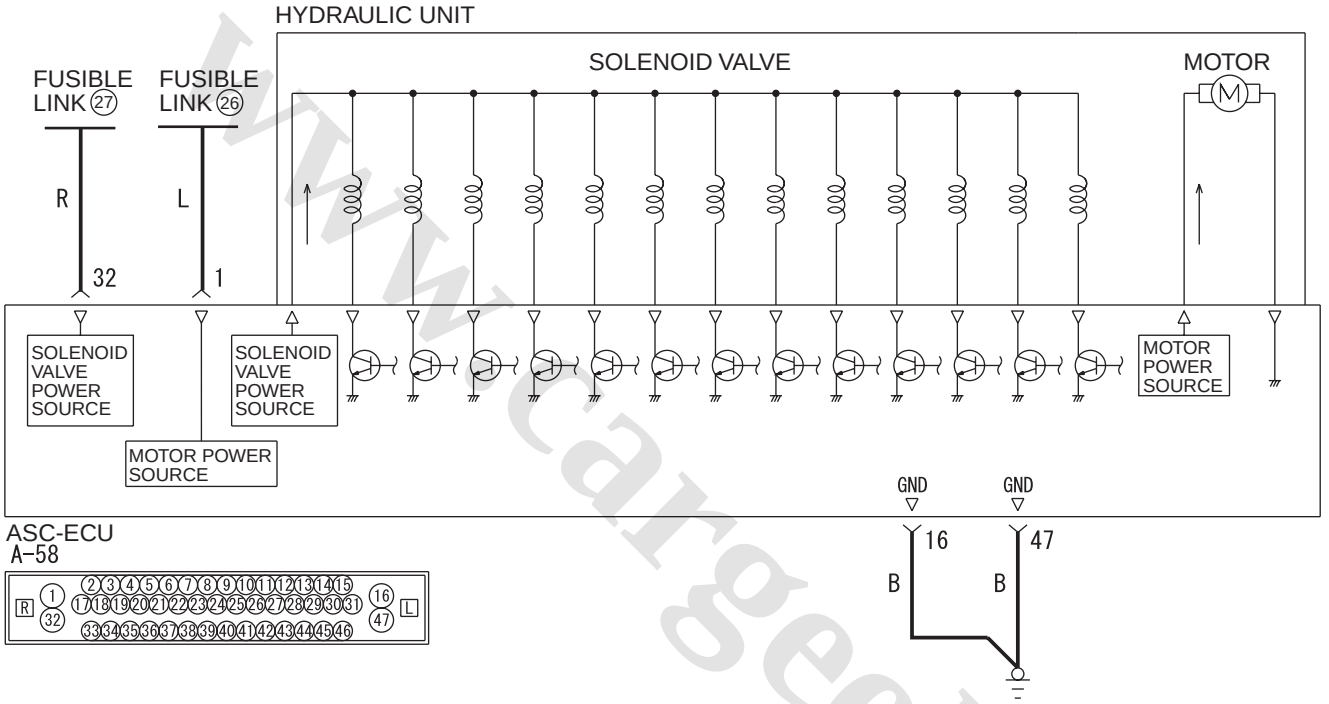

Wire colour code
B : Black LG : Light green G : Green L : Blue W : White Y : Yellow SB : Sky blue
BR : Brown O : Orange GR : Grey R : Red P : Pink V : Violet PU : Purple SI : Silver ACB02566

Connector: A-58 <LHD>

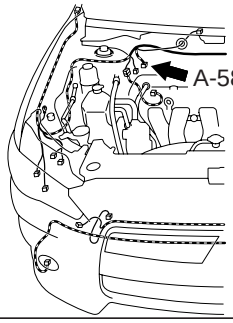

AC612691AO

Connector: A-58 <RHD>

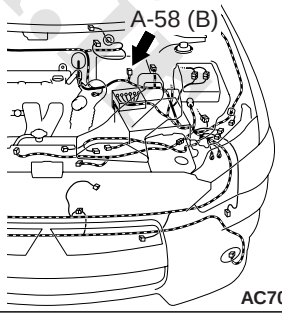

AC701238AF

www.cargeek.ir

www.CarGeek.ir

⚠ CAUTION

- **If there is any problem in the CAN bus lines, an incorrect diagnosis code may be set. Prior to this diagnosis, diagnose the CAN bus lines (Refer to GROUP 54C – CAN Bus Diagnostics Table).**
- **Whenever ECU is replaced, ensure that the CAN bus lines are normal.**
- **When the hydraulic unit (integrated with ASC-ECU) is replaced, always carry out the calibration of the steering wheel sensor, the G and yaw rate sensor and brake fluid pressure sensor (Refer to P.35C-182, P.35C-183 and P.35C-184).**

OPERATION

- ASC-ECU contains the power supply circuit (terminal No.32) for the solenoid valve. The solenoid valve is energised by the valve relay, which is incorporated in ASC-ECU.
- The valve relay, which is incorporated in ASC-ECU, is always energising the solenoid valve unless the initial check is in progress when the ignition switch is turned on, or the recurrent system check is in progress.

DIAGNOSIS CODE SET CONDITIONS

This diagnosis code will be set when the solenoid valve supply voltage is not within the standard value.

PROBABLE CAUSES

Current trouble

- Fusible link malfunction
- Damaged wiring harness and connectors
- Abnormality in battery or alternator
- ASC-ECU malfunction

Past trouble

- Carry out diagnosis with particular emphasis on wiring harness and connector failures between the power supply circuit (terminal No.32) to ASC-ECU solenoid valve or earth circuit (terminal No.16 and 47). For diagnosis procedures, refer to How to treat past trouble (GROUP 00 – How to Use Troubleshooting/How to Treat Past Trouble).

DIAGNOSIS PROCEDURE

STEP 1. M.U.T.-III CAN bus diagnosis

Use M.U.T.-III to diagnose the CAN bus lines.

Q: Is the check result normal?
YES : Go to Step 3.
NO : Repair the CAN bus lines (Refer to GROUP 54C – CAN Bus Diagnostics Table). On completion, go to Step 2.

STEP 2. Diagnosis code recheck after resetting CAN bus lines

Q: Is the diagnosis code No. C2104 set?
YES : Go to Step 3.
NO : This diagnosis is complete.

STEP 3. Battery check

Refer to GROUP 54A – Battery Test .

Q: Is the battery in good condition?
YES : Go to Step 4.
NO : Replace the battery. Then go to Step 11.

STEP 4. Charging system check

Refer to GROUP 16 – On–vehicle Service/Alternator Output Line Voltage Drop Test .

Q: Is the charging system in good condition?
YES : Go to Step 5.
NO : Repair or replace the charging system component(s). Then go to Step 11.

STEP 5. Connector check: A-58 ASC-ECU connector

Q: Is the check result normal?
YES : Go to Step 6.
NO : Repair the defective connector. Then go to Step 11.

STEP 6. Fusible link check: Check the fusible link No.27.

Visually check for open circuit in the fusible link No.27.

Q: Is the check result normal?
YES : Go to Step 8.
NO : Go to Step 7.

www.cargeek.ir

www.CarGeek.ir

STEP 7. Resistance measurement at A-58 ASC-ECU connector

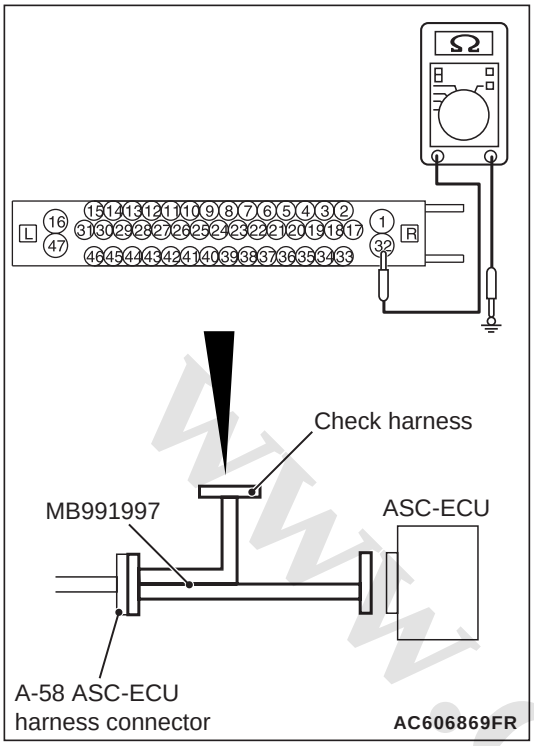

(1) Disconnect the ASC-ECU connector, connect special tool ASC check harness (MB991997) to the harness-side connector, and then measure the resistance at the special tool connector side.

NOTE: Do not connect the special tool ASC check harness (MB991997) to ASC-ECU.

(2) Disconnect the fusible link No.27.

(3) Measure the resistance between the terminal No.32 and the body earth.

OK: No continuity

Q: Is the check result normal?

YES : Replace the fusible link No.36. Then go to Step 11.

NO : The short circuit may be present in the power supply circuit. Repair the wiring harness between the A-58 ASC-ECU connector terminal No.32 and the fusible link No.27, and then replace the fusible link No.27. Then go to Step 11.

STEP 8. Voltage measurement at the A-58 ASC-ECU connector

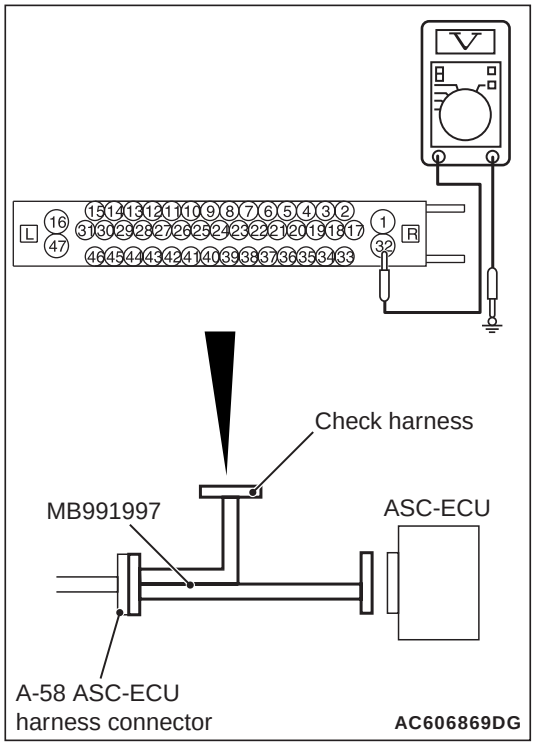

(1) Disconnect the ASC-ECU connector, connect special tool ASC check harness (MB991997) to the harness-side connector, and then measure the voltage at the special tool connector side.

NOTE: Do not connect the special tool ASC check harness (MB991997) to ASC-ECU.

(2) Measure the voltage between the terminal No.32 and the body earth.

OK: Approximately system voltage

Q: Is the check result normal?

YES : Go to Step 9.

NO : The open circuit may be present in the power supply circuit. Repair the wiring harness between the A-58 ASC-ECU connector terminal No.32 and the fusible link No.27. Then go to Step 11.

www.cargeek.ir

www.CarGeek.ir

STEP 9. Resistance measurement at A-58 ASC-ECU connector

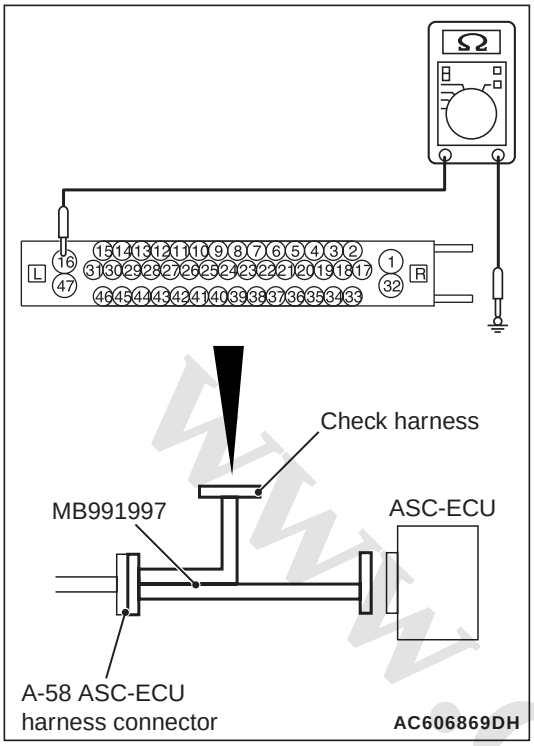

(1) Disconnect the ASC-ECU connector, connect special tool ASC check harness (MB991997) to the harness-side connector, and then measure the resistance at the special tool connector side.

NOTE: Do not connect the special tool ASC check harness (MB991997) to ASC-ECU.

(2) Measure the resistance between the terminal No.16 and the body earth, and between the terminal No.47 and the body earth.

OK: Continuity exists (2 Ω or less)

Q: Is the check result normal?

YES : Go to Step 10.

NO : An open circuit may be present in the earth circuit. Repair the wiring harness between the A-58 ASC-ECU connector terminal No.16 and the body earth, and between the A-58 ASC-ECU connector terminal No.47 and the body earth. Then go to Step 11.

STEP 10. Check whether the diagnosis code is reset.

Erase the diagnosis code.

Q: Is the diagnosis code No.C2104 set?

YES : Replace the hydraulic unit (integrated with ASC-ECU) (Refer to P.35C-185). Then go to Step 11.

NO : Intermittent malfunction (Refer to GROUP 00 – How to Use Troubleshooting/How to Cope with Intermittent Malfunctions).

STEP 11. Check whether the diagnosis code is reset.

Erase the diagnosis code.

Q: Is diagnosis code No.C2104 set?

YES : Return to Step 1.

NO : This diagnosis is complete.

www.cargeek.ir

www.CarGeek.ir

Code No. C1073 Faulty motor drive circuit

Solenoid Valve and Motor Power Source Circuit

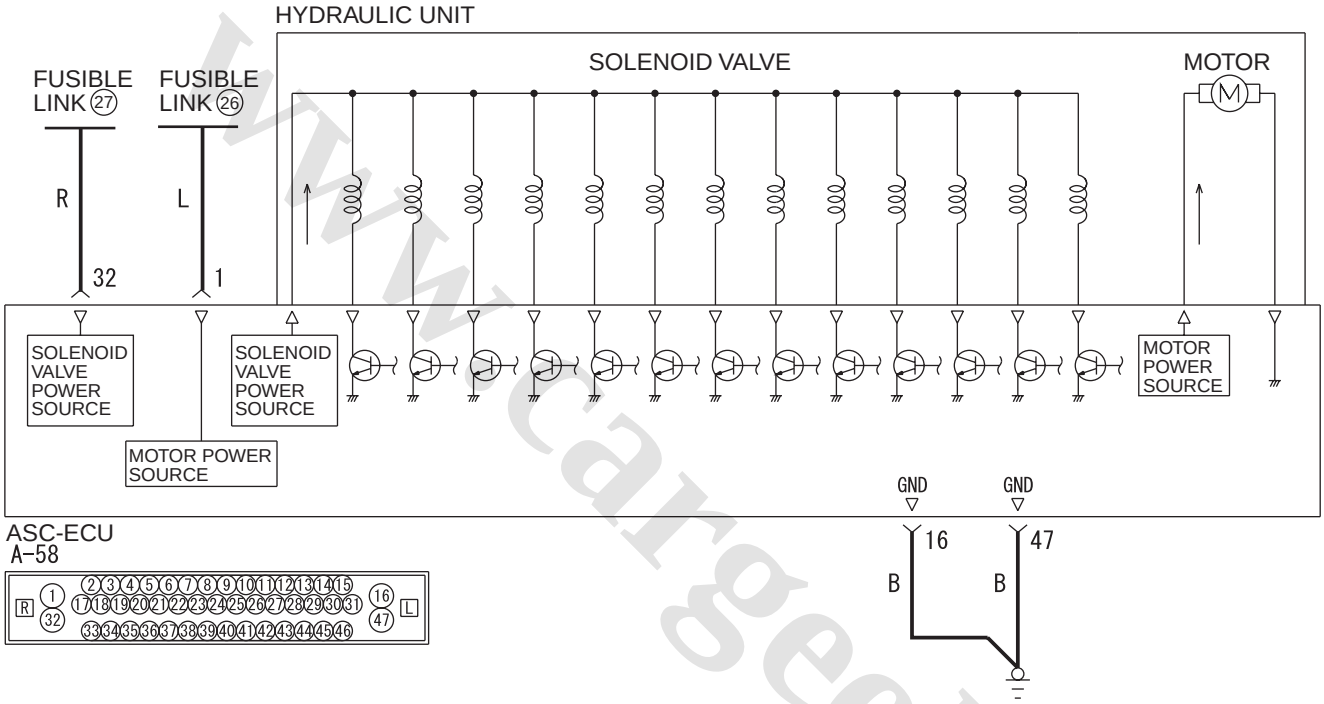

Wire colour code
B : Black LG : Light green G : Green L : Blue W : White Y : Yellow SB : Sky blue
BR : Brown O : Orange GR : Grey R : Red P : Pink V : Violet PU : Purple SI : Silver ACB02566

Connector: A-58 <LHD>

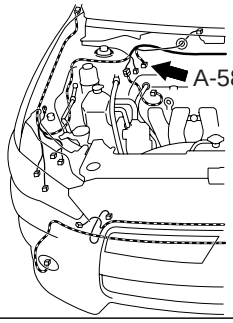

AC612691AO

Connector: A-58 <RHD>

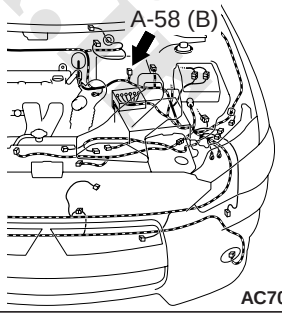

AC701238AF

www.cargeek.ir

www.CarGeek.ir

⚠ CAUTION

- **If there is any problem in the CAN bus lines, an incorrect diagnosis code may be set. Prior to this diagnosis, diagnose the CAN bus lines (Refer to GROUP 54C – CAN Bus Diagnostics Table).**
- **Whenever ECU is replaced, ensure that the CAN bus lines are normal.**
- **When the hydraulic unit (integrated with ASC-ECU) is replaced, always carry out the calibration of the steering wheel sensor, the G and yaw rate sensor and brake fluid pressure sensor (Refer to P.35C-182, P.35C-183 and P.35C-184).**

OPERATION

- ASC-ECU contains the power supply circuit (terminal No.1) for the pump motor. The pump motor is energised by the motor switch, which is incorporated in ASC-ECU.
- The pump motor switch, which is incorporated in ASC-ECU, is always off unless the motor solenoid valve check is activated when the vehicle is started.
- ASC-ECU activates the pump motor by turning on the ECU built-in pump motor switch.

DIAGNOSIS CODE SET CONDITIONS

If the pump motor switch voltage drop indicates high value when the pump motor operates or after the operation, the pump motor operation is stopped and this diagnosis code is set.

PROBABLE CAUSES

Current trouble

- Fusible link malfunction
- Damaged wiring harness and connectors
- Abnormality in battery or alternator
- ASC-ECU malfunction

Past trouble

- Carry out diagnosis with particular emphasis on wiring harness and connector failures between the power supply circuit (A-58 ASC-ECU connector terminal No.1) to the ASC-ECU motor and the earth circuit (A-58 ASC-ECU connector terminal No.16 and 47). For diagnosis procedures, refer to How to treat past trouble (GROUP 00 – How to Use Troubleshooting/How to Treat Past Trouble).

DIAGNOSIS PROCEDURE

STEP 1. M.U.T.-III CAN bus diagnosis

Use M.U.T.-III to diagnose the CAN bus lines.

Q: Is the check result normal?
YES : Go to Step 3.
NO : Repair the CAN bus lines (Refer to GROUP 54C – CAN Bus Diagnostics Table). On completion, go to Step 2.

STEP 2. Diagnosis code recheck after resetting CAN bus lines

Q: Is the diagnosis code No. C1073 set?
YES : Go to Step 3.
NO : This diagnosis is complete.

STEP 3. Battery check

Refer to GROUP 54A – Battery Test .

Q: Is the battery in good condition?
YES : Go to Step 4.
NO : Replace the battery. Then go to Step 11.

STEP 4. Charging system check

Refer to GROUP 16 – On–vehicle Service/Alternator Output Line Voltage Drop Test .

Q: Is the charging system in good condition?
YES : Go to Step 5.
NO : Repair or replace the charging system component(s). Then go to Step 11.

STEP 5. Connector check: A-58 ASC-ECU connector

Q: Is the check result normal?
YES : Go to Step 6.
NO : Repair the defective connector. Then go to Step 11.

STEP 6. Fusible link check: Check the fusible link No.26.

Visually check for open circuit in the fusible link No.26.

Q: Is the check result normal?
YES : Go to Step 8.
NO : Go to Step 7.

www.cargeek.ir

www.CarGeek.ir

STEP 7. Resistance measurement at A-58 ASC-ECU connector

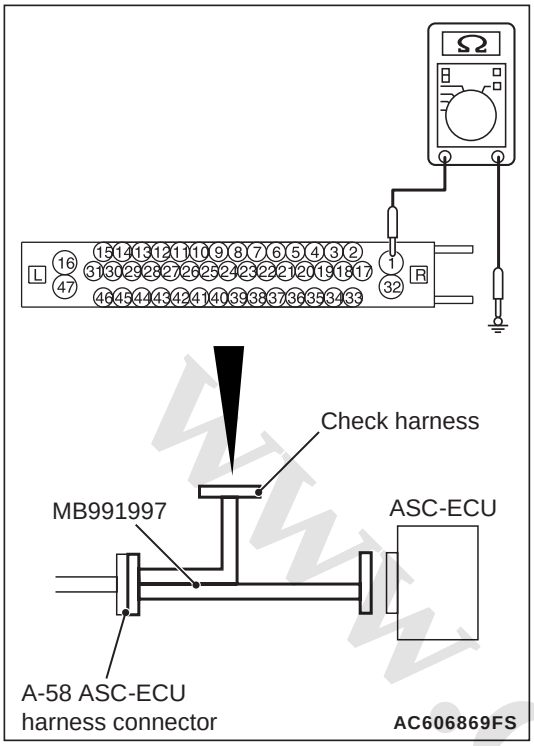

(1) Disconnect the ASC-ECU connector, connect special tool ASC check harness (MB991997) to the harness-side connector, and then measure the resistance at the special tool connector side.

NOTE: Do not connect the special tool ASC check harness (MB991997) to ASC-ECU.

(2) Disconnect the fusible link No.26.

(3) Measure the resistance between the terminal No.1 and the body earth.

OK: No continuity

Q: Is the check result normal?

YES : Replace the fusible link No.26. Then go to Step 11.

NO : The short circuit may be present in the power supply circuit. Repair the wiring harness between the A-58 ASC-ECU connector terminal No.1 and the fusible link No.26, and then replace the fusible link No.26. Then go to Step 11.

STEP 8. Voltage measurement at the A-58 ASC-ECU connector

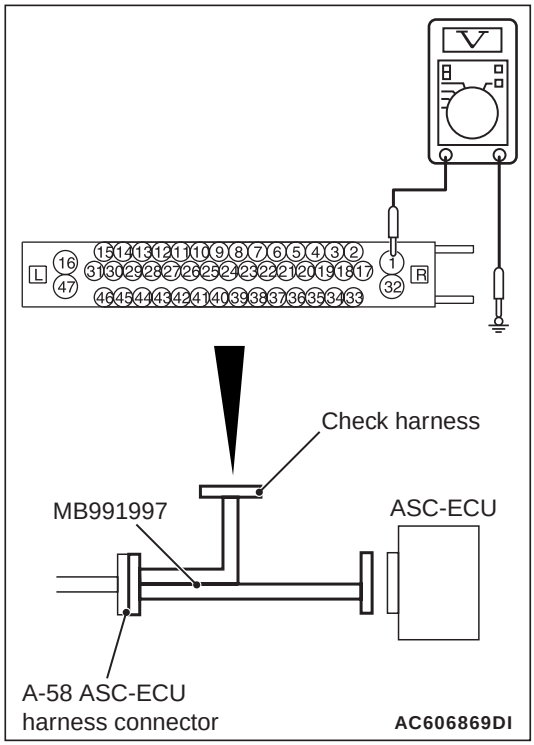

(1) Disconnect the ASC-ECU connector, connect special tool ASC check harness (MB991997) to the harness-side connector, and then measure the voltage at the special tool connector side.

NOTE: Do not connect the special tool ASC check harness (MB991997) to ASC-ECU.

(2) Measure the voltage between the terminal No.1 and the body earth.

OK: Approximately system voltage

Q: Is the check result normal?

YES : Go to Step 9.

NO : The open circuit may be present in the power supply circuit. Repair the wiring harness between the A-58 ASC-ECU connector terminal No.1 and the fusible link No.26. Then go to Step 11.

www.cargeek.ir

www.CarGeek.ir

STEP 9. Resistance measurement at A-58 ASC-ECU connector

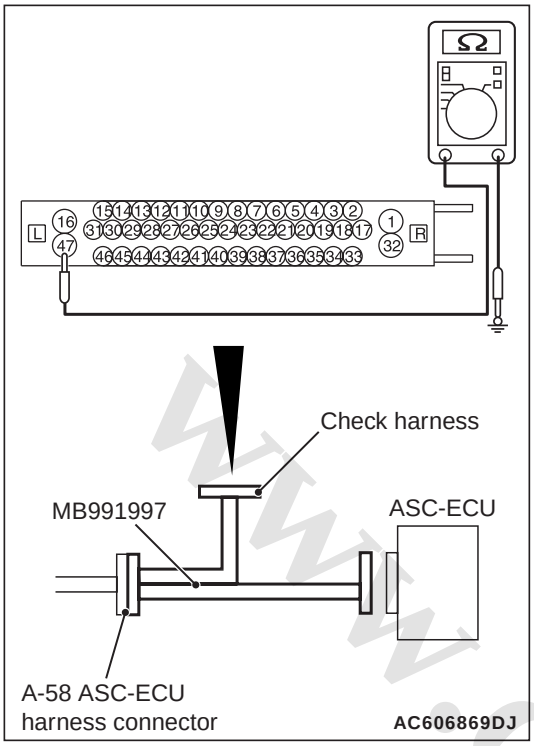

(1) Disconnect the ASC-ECU connector, connect special tool ASC check harness (MB991997) to the harness-side connector, and then measure the resistance at the special tool connector side.

NOTE: Do not connect the special tool ASC check harness (MB991997) to ASC-ECU.

(2) Measure the resistance between the terminal No.16 and the body earth, and between the terminal No.47 and the body earth.

OK: Continuity exists (2 Ω or less)

Q: Is the check result normal?

YES : Go to Step 10.

NO : An open circuit may be present in the earth circuit. Repair the wiring harness between the A-58 ASC-ECU connector terminal No.16 and the body earth, and between the A-58 ASC-ECU connector terminal No.47 and the body earth. Then go to Step 11.

STEP 10. Check whether the diagnosis code is reset.

(1) Erase the diagnosis code.

(2) Drive the vehicle at 20 km/h or higher.

NOTE: The ABS warning lamp does not turn OFF in some cases unless the vehicle runs at 20 km/h or higher.

Q: Is the diagnosis code No. C1073 set?

YES : Replace the hydraulic unit (integrated with ASC-ECU) (Refer to P.35C-185). Then go to Step 11.

NO : Intermittent malfunction (Refer to GROUP 00 – How to Use Troubleshooting/How to Cope with Intermittent Malfunctions).

STEP 11. Check whether the diagnosis code is reset.

(1) Erase the diagnosis code.

(2) Drive the vehicle at 20 km/h or higher.

NOTE: The ABS warning lamp does not turn OFF in some cases unless the vehicle runs at 20 km/h or higher.

Q: Is the diagnosis code No. C1073 set?

YES : Return to Step 1.

NO : This diagnosis is complete.

www.cargeek.ir

www.CarGeek.ir

Code No. C2116 Low or high power supply voltage in pump motor

Solenoid Valve and Motor Power Source Circuit

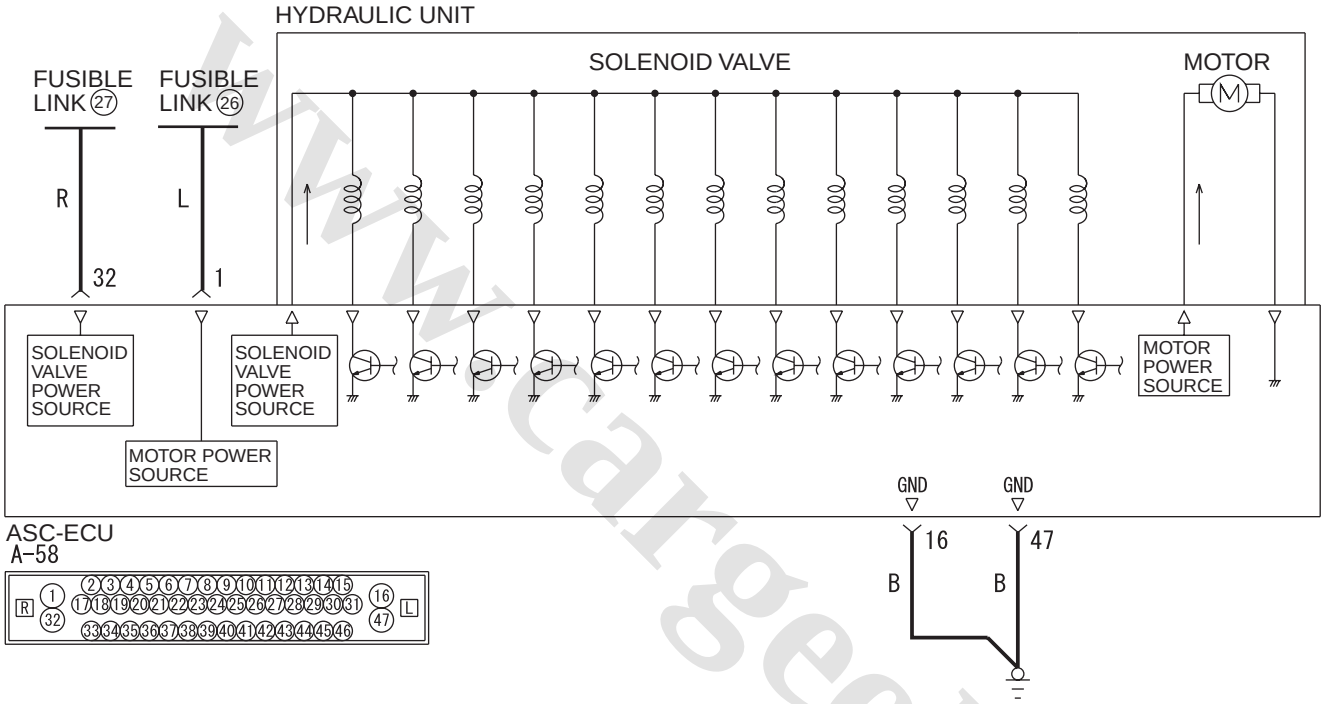

Wire colour code
B : Black LG : Light green G : Green L : Blue W : White Y : Yellow SB : Sky blue
BR : Brown O : Orange GR : Grey R : Red P : Pink V : Violet PU : Purple SI : Silver ACB02566

Connector: A-58 <LHD>

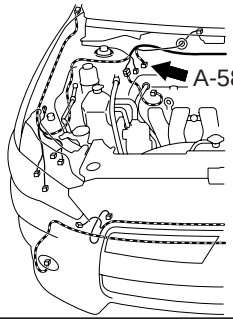

AC612691AO

Connector: A-58 <RHD>

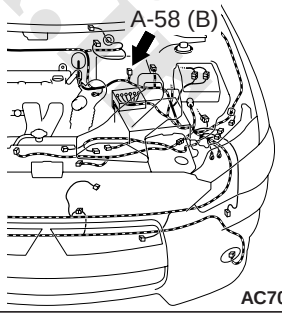

AC701238AF

www.cargeek.ir

www.CarGeek.ir

⚠ CAUTION

- **If there is any problem in the CAN bus lines, an incorrect diagnosis code may be set. Prior to this diagnosis, diagnose the CAN bus lines (Refer to GROUP 54C – CAN Bus Diagnostics Table).**
- **Whenever ECU is replaced, ensure that the CAN bus lines are normal.**
- **When the hydraulic unit (integrated with ASC-ECU) is replaced, always carry out the calibration of the steering wheel sensor, the G and yaw rate sensor and brake fluid pressure sensor (Refer to P.35C-182, P.35C-183 and P.35C-184).**

OPERATION

- ASC-ECU contains the power supply circuit (terminal No.1) for the pump motor. The pump motor is energised by the motor switch, which is incorporated in ASC-ECU.
- The pump motor switch, which is incorporated in ASC-ECU, is always off unless the motor solenoid valve check is activated when the vehicle is started.
- ASC-ECU activates the pump motor by turning on the ECU built-in pump motor switch.

DIAGNOSIS CODE SET CONDITIONS

This diagnosis codes will be set under the cases below:

- When the power supply voltage of the pump motor, which is not in operation, is abnormally low for a prolonged period
- When the power supply voltage of the pump motor, which is not in operation, is abnormally high for a prolonged period

PROBABLE CAUSES

Current trouble

- Fusible link malfunction
- Damaged wiring harness and connectors
- Abnormality in battery or alternator
- ASC-ECU malfunction

Past trouble

- Carry out diagnosis with particular emphasis on wiring harness and connector failures between the power supply circuit (A-58 ASC-ECU connector terminal No.1) to the ASC-ECU motor and the earth circuit (A-58 ASC-ECU connector terminal No.16 and 47). For diagnosis procedures, refer to How to treat past trouble (GROUP 00 – How to Use Troubleshooting/How to Treat Past Trouble).

DIAGNOSIS PROCEDURE

STEP 1. M.U.T.-III CAN bus diagnosis

Use M.U.T.-III to diagnose the CAN bus lines.

Q: Is the check result normal?
YES : Go to Step 3.
NO : Repair the CAN bus lines (Refer to GROUP 54C – CAN Bus Diagnostics Table). On completion, go to Step 2.

STEP 2. Diagnosis code recheck after resetting CAN bus lines

Q: Is the diagnosis code No. C2116 set?
YES : Go to Step 3.
NO : This diagnosis is complete.

STEP 3. Battery check

Refer to GROUP 54A – Battery Test .

Q: Is the battery in good condition?
YES : Go to Step 4.
NO : Replace the battery. Then go to Step 11.

STEP 4. Charging system check

Refer to GROUP 16 – On–vehicle Service/Alternator Output Line Voltage Drop Test .

Q: Is the charging system in good condition?
YES : Go to Step 5.
NO : Repair or replace the charging system component(s). Then go to Step 11.

STEP 5. Connector check: A-58 ASC-ECU connector

Q: Is the check result normal?
YES : Go to Step 6.
NO : Repair the defective connector. Then go to Step 11.

STEP 6. Fusible link check: Check the fusible link No.26.

Visually check for open circuit in the fusible link No.26.

Q: Is the check result normal?
YES : Go to Step 8.
NO : Go to Step 7.

www.cargeek.ir

www.CarGeek.ir

STEP 7. Resistance measurement at A-58 ASC-ECU connector

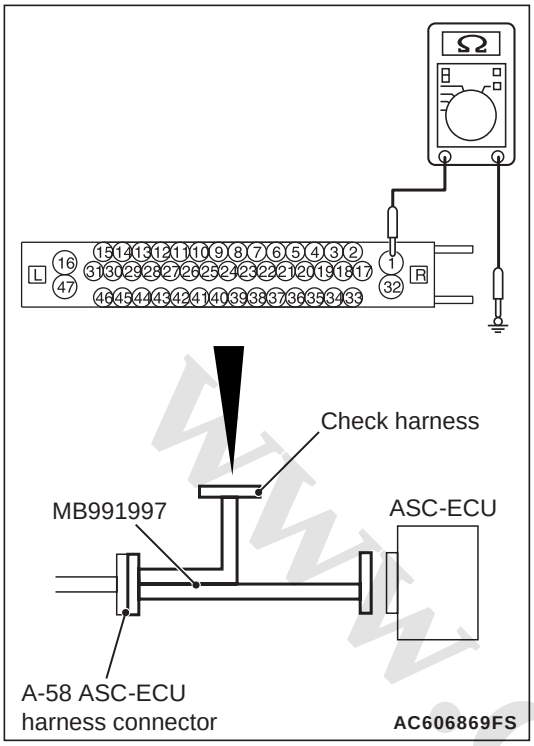

(1) Disconnect the ASC-ECU connector, connect special tool ASC check harness (MB991997) to the harness-side connector, and then measure the resistance at the special tool connector side.

NOTE: Do not connect the special tool ASC check harness (MB991997) to ASC-ECU.

(2) Disconnect the fusible link No.26.

(3) Measure the resistance between the terminal No.1 and the body earth.

OK: No continuity

Q: Is the check result normal?

YES : Replace the fusible link No.26. Then go to Step 11.

NO : The short circuit may be present in the power supply circuit. Repair the wiring harness between the A-58 ASC-ECU connector terminal No.1 and the fusible link No.26, and then replace the fusible link No.26. Then go to Step 11.

STEP 8. Voltage measurement at the A-58 ASC-ECU connector

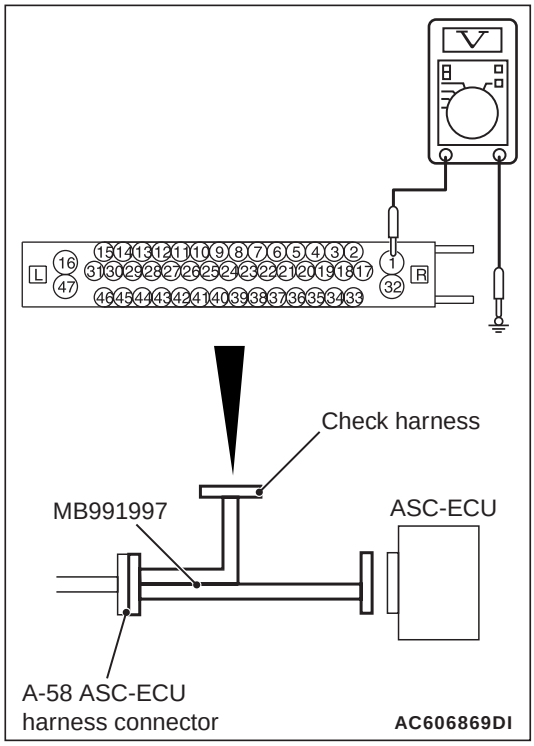

(1) Disconnect the ASC-ECU connector, connect special tool ASC check harness (MB991997) to the harness-side connector, and then measure the voltage at the special tool connector side.

NOTE: Do not connect the special tool ASC check harness (MB991997) to ASC-ECU.

(2) Measure the voltage between the terminal No.1 and the body earth.

OK: Approximately system voltage

Q: Is the check result normal?

YES : Go to Step 9.

NO : The open circuit may be present in the power supply circuit. Repair the wiring harness between the A-58 ASC-ECU connector terminal No.1 and the fusible link No.26. Then go to Step 11.

www.cargeek.ir

www.CarGeek.ir

STEP 9. Resistance measurement at A-58 ASC-ECU connector

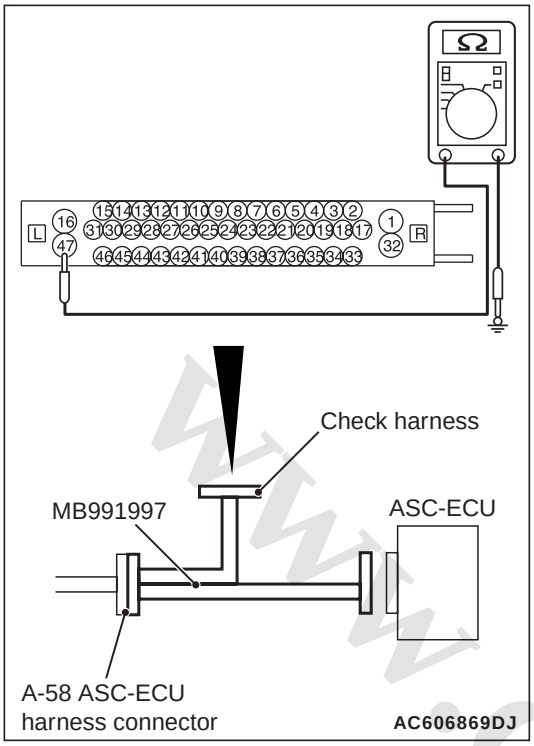

(1) Disconnect the ASC-ECU connector, connect special tool ASC check harness (MB991997) to the harness-side connector, and then measure the resistance at the special tool connector side.

NOTE: Do not connect the special tool ASC check harness (MB991997) to ASC-ECU.

(2) Measure the resistance between the terminal No.16 and the body earth, and between the terminal No.47 and the body earth.

OK: Continuity exists (2 Ω or less)

Q: Is the check result normal?

YES : Go to Step 10.

NO : An open circuit may be present in the earth circuit. Repair the wiring harness between the A-58 ASC-ECU connector terminal No.16 and the body earth, and between the A-58 ASC-ECU connector terminal No.47 and the body earth. Then go to Step 11.

STEP 10. Check whether the diagnosis code is reset.

(1) Erase the diagnosis code.

(2) Drive the vehicle at 20 km/h or higher.

NOTE: The ABS warning lamp does not turn OFF in some cases unless the vehicle runs at 20 km/h or higher.

Q: Is the diagnosis code No. C2116 set?

YES : Replace the hydraulic unit (integrated with ASC-ECU) (Refer to P.35C-185). Then go to Step 11.

NO : Intermittent malfunction (Refer to GROUP 00 – How to Use Troubleshooting/How to Cope with Intermittent Malfunctions).

STEP 11. Check whether the diagnosis code is reset.

(1) Erase the diagnosis code.

(2) Drive the vehicle at 20 km/h or higher.

NOTE: The ABS warning lamp does not turn OFF in some cases unless the vehicle runs at 20 km/h or higher.

Q: Is the diagnosis code No. C2116 set?

YES : Return to Step 1.

NO : This diagnosis is complete.

Code No. C121D Abnormality in brake fluid pressure sensor circuit

⚠ CAUTION

- **If there is any problem in the CAN bus lines, an incorrect diagnosis code may be set. Prior to this diagnosis, diagnose the CAN bus lines (Refer to GROUP 54C – CAN Bus Diagnostics Table).**
- **When the hydraulic unit (integrated with ASC-ECU) is replaced, always carry out the calibration of the steering wheel sensor, the G and yaw rate sensor and brake fluid pressure sensor (Refer to P.35C-182, P.35C-183 and P.35C-184).**
- **Whenever ECU is replaced, ensure that the CAN bus lines are normal.**

OPERATION

The hydraulic sensor is incorporated in the hydraulic unit. When the brake pedal is depressed, the pressure sensor detects the brake pressure applied from the master cylinder, converts this pressure into the voltage signal, and outputs it.

DIAGNOSIS CODE SET CONDITIONS

When the pressure sensor output signal is not within the standard value range, ASC-ECU sets this diagnosis code.

www.cargeek.ir

www.CarGeek.ir

PROBABLE CAUSES

- Incorrect brake pedal height
- Incorrect adjustment of the stop lamp switch
- Master cylinder malfunction
- Brake booster malfunction
- ASC-ECU malfunction

DIAGNOSIS PROCEDURE

STEP 1. M.U.T.-III CAN bus diagnostics

Use M.U.T.-III to diagnose the CAN bus lines.

Q: Is the check result normal?

YES : Go to Step 3.

NO : Repair the CAN bus lines (Refer to GROUP 54C – CAN Bus Diagnostics Table). On completion, go to Step 2.

STEP 2. Diagnosis code recheck after resetting CAN bus lines

Q: Is diagnosis code No. C121D set?

YES : Go to Step 3.

NO : This diagnosis is complete.

STEP 3. Brake pedal check

Refer to GROUP 35A – On-vehicle Service/Brake Pedal Check and Adjustment .

Q: Is the check result normal?

YES : Go to Step 4.

NO : Go to GROUP 35A – On-vehicle Service/ Brake Pedal Check and Adjustment . Then go to Step 7.

STEP 4. Check the installation condition of the stop lamp switch.

Refer to GROUP 35A – On-vehicle Service/Brake Pedal Check and Adjustment .

Q: Is the check result normal?

YES : Go to Step 5.

NO : Install the stop lamp switch correctly (Refer to GROUP 35A – On-vehicle Service/Brake Pedal Check and Adjustment .), and then go to Step 7.

STEP 5. Brake booster check

Refer to GROUP 35A – On-vehicle Service/Brake Booster Operating Check .

Q: Is the check result normal?

YES : Go to Step 6.

NO : After replacing the brake booster, go to Step 7.

STEP 6. Check whether the diagnosis code is reset.

Erase the diagnosis code.

Q: Is diagnosis code No.C121D set?

YES : Replace the hydraulic unit (integrated with ASC-ECU) (Refer to P.35C-185). Then go to Step 7.

NO : The trouble can be an intermittent malfunction (Refer to GROUP 00 – How to Use Troubleshooting/How to Cope with Intermittent Malfunctions).

STEP 7. Check whether the diagnosis code is reset.

Erase the diagnosis code.

Q: Is diagnosis code No.C121D set?

YES : Return to Step 1.

NO : This diagnosis is complete.

www.cargeek.ir

www.CarGeek.ir

Code No. C121E Abnormality in brake fluid pressure sensor output signal

⚠ CAUTION

- **If there is any problem in the CAN bus lines, an incorrect diagnosis code may be set. Prior to this diagnosis, diagnose the CAN bus lines (Refer to GROUP 54C – CAN Bus Diagnostics Table).**
- **Whenever ECU is replaced, ensure that the CAN bus lines are normal.**
- **When the hydraulic unit (integrated with ASC-ECU) is replaced, always carry out the calibration of the steering wheel sensor, the G and yaw rate sensor and brake fluid pressure sensor (Refer to P.35C-182, P.35C-183 and P.35C-184).**

OPERATION

The hydraulic sensor is incorporated in the hydraulic unit. When the brake pedal is depressed, the pressure sensor detects the brake pressure applied from the master cylinder, converts this pressure into the voltage signal, and outputs it.

DIAGNOSIS CODE SET CONDITIONS

This diagnosis codes will be set under the cases below:

- When the pressure sensor offset is not within the standard value range
- When the estimated pressure sensor temperature is not normal

PROBABLE CAUSES

- Incorrect adjustment of brake pedal height
- Master cylinder malfunction
- Brake booster malfunction
- Incorrect installation position of stop lamp switch
- Malfunction of the stop lamp switch
- Brake drag
- ASC-ECU malfunction

DIAGNOSIS PROCEDURE

STEP 1. M.U.T.-III CAN bus diagnosis

Use M.U.T.-III to diagnose the CAN bus lines.

Q: Is the check result normal?

YES : Go to Step 3.

NO : Repair the CAN bus lines (Refer to GROUP 54C – CAN Bus Diagnostics Table). On completion, go to Step 2.

STEP 2. Diagnosis code recheck after resetting CAN bus lines

Q: Is the diagnosis code No. C121E set?

YES : Go to Step 3.

NO : This diagnosis is complete.

STEP 3. Brake pedal check

Refer to GROUP 35A – On-vehicle Service/Brake Pedal Check and Adjustment .

Q: Is the check result normal?

YES : Go to Step 4.

NO : Go to GROUP 35A – On-vehicle Service/Brake Pedal Check and Adjustment . Then go to Step 9.

STEP 4. Check for stop lamp switch installation

Refer to GROUP 35A – On-vehicle Service/Brake Pedal Check and Adjustment .

Q: Is the check result normal?

YES : Go to Step 5.

NO : Install the stop lamp switch correctly (Refer to GROUP 35A – On-vehicle Service/Brake Pedal Check and Adjustment .), and then go to Step 9.

STEP 5. Stop lamp switch continuity check

(1) Remove the stop lamp switch (Refer to GROUP

www.cargeek.ir

www.CarGeek.ir

35A –Brake Pedal).

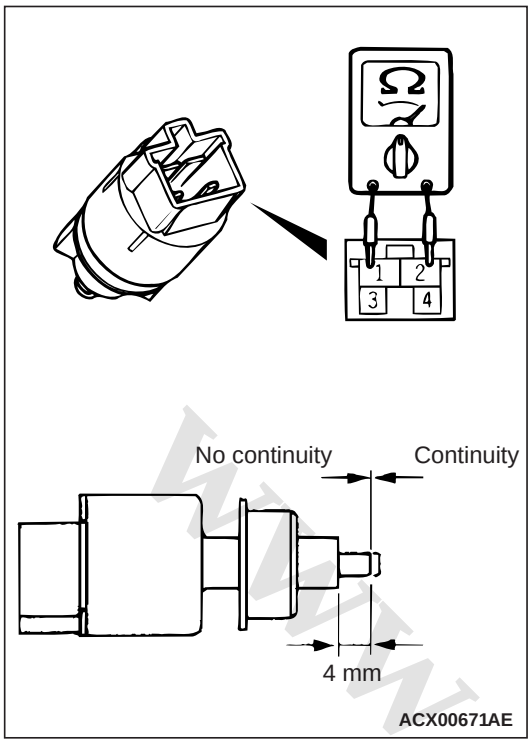

(2) Connect the circuit tester (Ω range) to the stop lamp switch connector terminals No.1 and 2.
(3) When no continuity is detected with the plunger pressed from the edge of the outer case by the dimension shown in the figure and when continuity is detected with the plunger released, the stop lamp switch is in good condition.

Q: Is the check result normal?
YES : Go to Step 6.
NO : Replace the stop lamp switch (Refer to GROUP 35A –Brake Pedal), and then go to Step 9.

STEP 6. Brake drag check
Check the brake system for drag.

Q: Is the check result normal?
YES : Go to Step 7.
NO : Repair the brake drag, and then go to Step 9.

STEP 7. Brake booster check
Refer to GROUP 35A – On-vehicle Service/Brake Booster Operation Check .

Q: Is the check result normal?
YES : Go to Step 8.
NO : Replace the brake booster (Refer to GROUP 35A – Master Cylinder Assembly and Brake Booster <Except 4B11>, <4B11>), and then go to Step 9.

STEP 8. Check whether the diagnosis code is reset.
Erase the diagnosis code.

Q: Is the diagnosis code No. C121E set?
YES : Replace the hydraulic unit (integrated with ASC-ECU) (Refer to P.35C-185). Then go to Step 9.
NO : The trouble can be an intermittent malfunction (Refer to GROUP 00 – How to Use Troubleshooting/How to Cope with Intermittent Malfunctions).

STEP 9. Check whether the diagnosis code is reset.
Erase the diagnosis code.

Q: Is diagnosis code No.C121E set?
YES : Return to Step 1.
NO : This diagnosis is complete.

www.cargeek.ir

www.CarGeek.ir

Code No. C1000 Abnormality in stop lamp switch circuit

Stop Lamp Switch Circuit

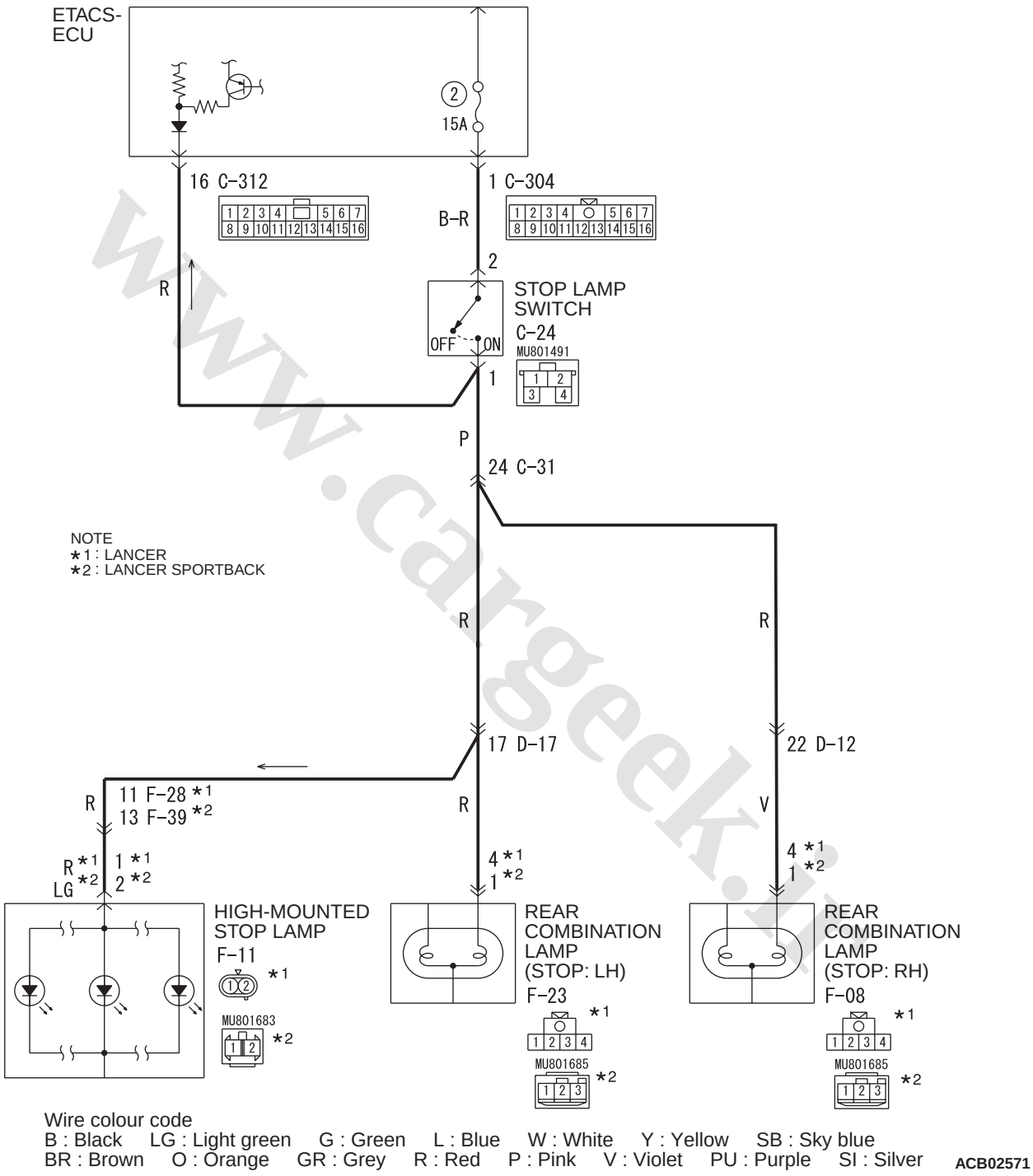

www.cargeek.ir

www.CarGeek.ir

Connectors: C-24, C-31 <LHD>

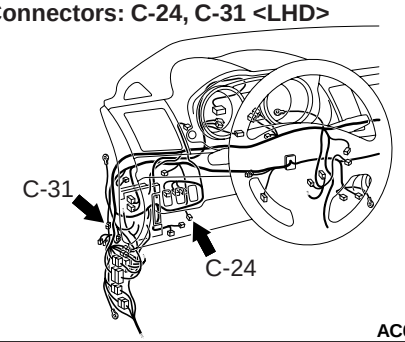

AC612705IX

Connectors: D-12, D-17

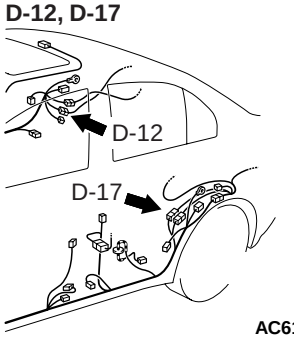

AC612723BU

Connector: C-24 <RHD>

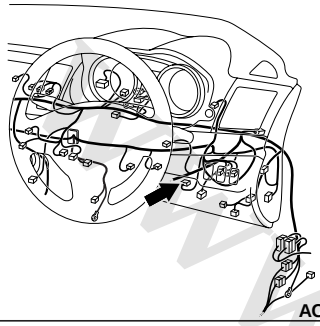

AC612711AD

Connectors: F-08, F-11, F-23 <LANCER>

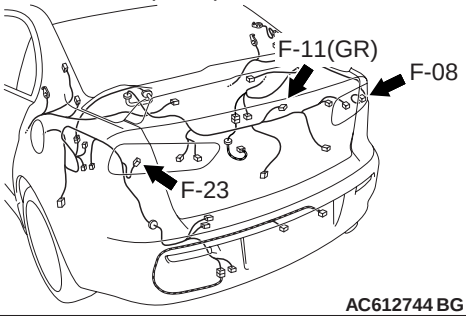

AC612744 BG

Connectors: C-31 <RHD>

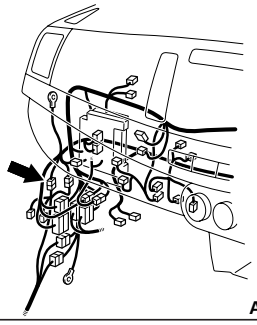

AC612710EQ

Connectors: F-08, F-11, F-23 <LANCER SPORTBACK>

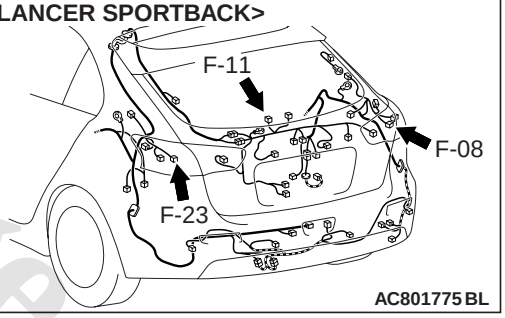

AC801775 BL

Connectors: C-304, C-312 <LHD>

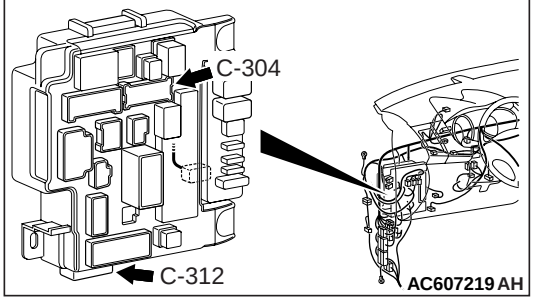

AC607219 AH

Connectors: C-304, C-312 <RHD>

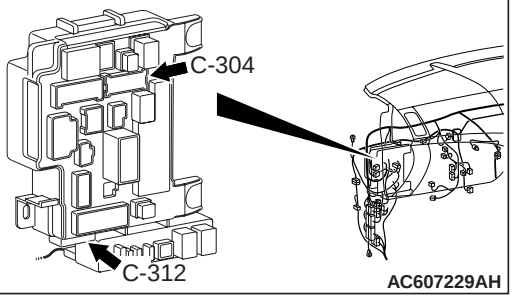

AC607229AH

⚠ CAUTION

- **If there is any problem in the CAN bus lines, an incorrect diagnosis code may be set. Prior to this diagnosis, diagnose the CAN bus lines (Refer to GROUP 54C – CAN Bus Diagnostics Table).**
- **Whenever ECU is replaced, ensure that the CAN bus lines are normal.**

OPERATION

ETACS-ECU sends the ON signal generated when the brake pedal is depressed and OFF signal generated when it is released to ASC-ECU via the CAN bus lines.

DIAGNOSIS CODE SET CONDITIONS

This diagnosis code is set in the following case.

- When the vehicle has run for a long time with the stop lamp switch turned ON.
- When the OFF status of the stop lamp switch does not match the vehicle attitude

www.cargeek.ir

www.CarGeek.ir

PROBABLE CAUSES

- Improper adjustment of stop lamp switch installation position
- Stop lamp switch malfunction
- Damaged wiring harness and connectors
- Malfunction of ETACS-ECU
- ASC-ECU malfunction

DIAGNOSTIC PROCEDURE

STEP 1. M.U.T.-III CAN bus diagnostics

Use M.U.T.-III to diagnose the CAN bus lines.

Q: Is the check result normal?

YES : Go to Step 3.

NO : Repair the CAN bus lines. (Refer to GROUP 54C – CAN Bus Diagnostics Table .) On completion, go to Step 2.

STEP 2. Diagnosis code recheck after resetting CAN bus lines

Q: Is diagnosis code No.C1000 set?

YES : Go to Step 3.

NO : This diagnosis is complete.

STEP 3. Battery check

Refer to GROUP 54A – Battery Test .

Q: Is the battery in good condition?

YES : Go to Step 4.

NO : Charge or replace the battery, and go to Step 15.

STEP 4. Stop lamp operation check

Check the stop lamp operation when the brake pedal is depressed. Check that all the stop lamp illuminates when the brake pedal is depressed and that it goes out when the brake pedal is released.

OK:

When the brake pedal is released: OFF

When the brake pedal is depressed: Illuminates

Q: Is the check result normal?

YES : Go to Step 15.

NO : Go to Step 5.

STEP 5. Check for stop lamp switch installation

Refer to GROUP 35A – On-vehicle Service/Brake Pedal Check and Adjustment .

Q: Is the check result normal?

YES : Go to Step 6.

NO : Install the stop lamp switch correctly. (Refer to GROUP 35A – On-vehicle Service/Brake Pedal Check and Adjustment .) Then go to Step 19.

STEP 6. Stop lamp switch continuity check

(1) Remove the stop lamp switch. (Refer to GROUP 35A – Brake Pedal .)

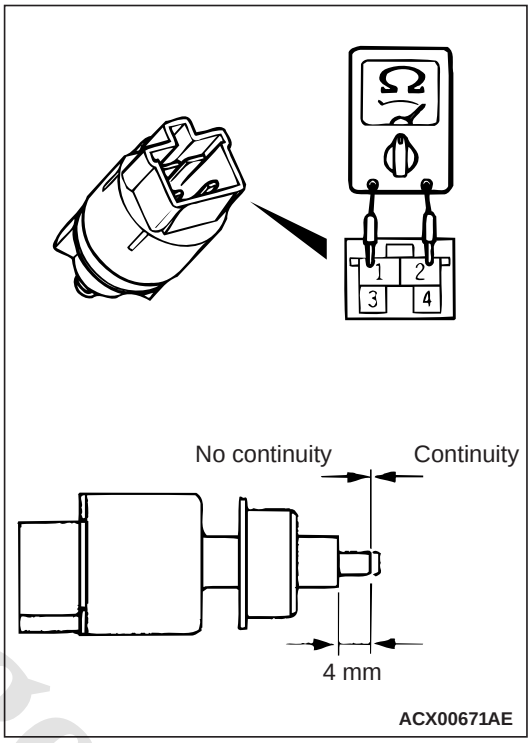

(2) Connect the circuit tester (Ω range) to the stop lamp switch connector terminals No. 1 and 2.

(3) When no continuity is detected with the plunger pressed from the edge of the outer case by the dimension shown in the figure and when continuity is detected with the plunger released, the stop lamp switch is in good condition.

Q: Is the check result normal?

YES : Go to Step 7.

NO : Replace the stop lamp switch. (Refer to GROUP 35A – Brake Pedal .) Then go to Step 19.

STEP 7. ETACS-ECU fuse No.2 check

Q: Is the check result normal?

YES : Go to Step 11.

NO : Go to Step 8.

www.cargeek.ir

www.CarGeek.ir

STEP 8. Connector check: C-304 ETACS-ECU connector, C-312 ETACS-ECU connector, C-24 stop lamp switch connector, C-31 Intermediate connector, D-12 Intermediate connector, D-17 Intermediate connector, F-28 Intermediate connector <LANCER>, F-39 Intermediate connector <LANCER SPORTBACK>, F-08 rear combination lamp (stop: RH) connector, F-23 rear combination lamp (stop: LH) connector, F-11 highmounted stop lamp connector

Q: Is the check result normal?
YES : Go to Step 9.
NO : Repair the damaged connector, and then replace fuse No.2. Then go to Step 19.

STEP 9. Resistance measurement at C-24 stop lamp switch connector
(1) Disconnect C-24 stop lamp switch connector, and measure at the wiring harness side.
(2) Disconnect C-312 ETACS-ECU connector and C-30 joint connector.
(3) Measure the resistance between the terminal No.1 and the body earth.

OK: No continuity

Q: Is the check result normal?
YES : Go to Step 10.
NO : A short circuit may be present in the wiring harness between C-24 stop lamp switch connector terminal No.1 and F-08 rear combination lamp (stop: RH) connector terminal No.4 <LANCER>, No.1 <LANCER SPORTBACK>, F-23 rear combination lamp (stop: LH) connector terminal No.4 <LANCER>, No.1 <LANCER SPORTBACK>, F-11 highmounted stop lamp connector terminal No.1 <LANCER>, No.2 <LANCER SPORTBACK> or between C-312 ETACS-ECU connector terminal No.16 and C-24 stop lamp switch connector terminal No.1. Repair the wiring harness if necessary, and then replace fuse No.2. Then go to Step 19.

STEP 10. Resistance measurement at C-24 stop lamp switch connector
(1) Disconnect C-24 stop lamp switch connector, and measure at the wiring harness side.
(2) Disconnect C-304 ETACS-ECU connector.
(3) Measure the resistance between the terminal No.2 and the body earth.

OK: No continuity

Q: Is the check result normal?
YES : Go to Step 11.
NO : A short circuit may be present in the wiring harness between C-304 ETACS-ECU connector terminal No.1 and C-24 stop lamp switch connector terminal No.2. Repair the wiring harness if necessary, and then replace fuse No.2. Then go to Step 19.

STEP 11. Connector check: C-304 ETACS-ECU connector

Q: Is the check result normal?
YES : Go to Step 12.
NO : Repair the damaged connector.

STEP 12. Measure the voltage at the C-304 ETACS-ECU connector.

⚠ CAUTION
Measure while the brake pedal is not depressed.
Measure the voltage between terminal No. 1 and the body earth by backprobing.

OK: Approximately system voltage

Q: Is the check result normal?
YES : Go to Step 13.
NO : Replace the ETACS-ECU (Refer to GROUP 54A – ETACS-ECU). Then go to Step 19.

STEP 13. Connector check: C-24 Stop lamp switch connector

Q: Is the check result normal?
YES : Go to Step 14.
NO : Repair the damaged connector.

STEP 14. Measure the voltage at C-24 stop lamp switch connector.
(1) Disconnect C-24 stop lamp switch connector, and measure the voltage at harness connector side.
(2) Measure the voltage between the terminal No.2 and the body earth.

OK: Approximately system voltage

Q: Is the check result normal?
YES : Go to Step 15.
NO : An open circuit may be present in the wiring harness between C-304 ETACS-ECU connector terminal No. 1 and C-24 stop lamp switch connector terminal No. 2. Repair the wiring harness.

STEP 15. Connector check: C-312 ETACS-ECU connector

Q: Is the check result normal?

www.cargeek.ir

www.CarGeek.ir

YES : Go to Step 16.
NO : Repair the damaged connector.

STEP 16. Measure the voltage at the C-312 ETACS-ECU connector.

(1) Measure by backprobing without disconnecting the connector.
(2) Measure the voltage between the terminal No.16 and the body earth.

OK:
When the brake pedal is released: 0 V - 5V (pulse)
When the brake pedal is depressed: Approximately system voltage

Q: Is the check result normal?
YES : Go to Step 18.
NO : Go to Step 17.

STEP 17. Check the wiring harness between C-312 ETACS-ECU connector terminal No.16 and C-24 stop lamp switch connector terminal No.1

- Check the signal line for open circuit.

Q: Is the check result normal?
YES : Replace the ETACS-ECU.
NO : Repair the wiring harness.

STEP 18. Diagnosis code recheck

Erase the diagnosis code.

Q: Is diagnosis code No.C1000 set?
YES : Replace the hydraulic unit (integrated with ASC-ECU) (Refer to P.35C-185). Then go to Step 19.
NO : Intermittent malfunction (Refer to GROUP 00 – How to Use Troubleshooting/How to Cope with Intermittent Malfunctions .)

STEP 19. Diagnosis code recheck

Erase the diagnosis code.

Q: Is diagnosis code No.C1000 set?
YES : Return to Step 1.
NO : This diagnosis is complete.

Code No.C123B: Prolonged operation of ASC

⚠ CAUTION

- **If there is any problem in the CAN bus lines, an incorrect diagnosis code may be set. Prior to this diagnosis, diagnose the CAN bus lines (Refer to GROUP 54C – CAN Bus Diagnostics Table).**
- **Whenever ECU is replaced, ensure that the CAN bus lines are normal.**
- **Do not drop or shock the G and yaw rate sensor.**
- **When the G and yaw rate sensor is replaced, always carry out calibration to make ASC-ECU learn the neutral point (Refer to P.35C-182).**
- **When the hydraulic unit (integrated with ASC-ECU) is replaced, always carry out the calibration of the steering wheel sensor, the G and yaw rate sensor and brake fluid pressure sensor (Refer to P.35C-182, P.35C-183 and P.35C-184).**

OPERATION

ASC-ECU controls ASC by calculating the data sent from the wheel speed sensor, the steering wheel sensor, and the G and yaw rate sensor.

DIAGNOSIS CODE SET CONDITIONS

This diagnosis code is set when ASC operates for a prolonged period.

NOTE: This diagnosis code may be set when the vehicle runs on a slippery or rough road.

PROBABLE CAUSES

- Steering wheel sensor malfunction
- G and yaw rate sensor malfunction
- Improper installation of steering wheel sensor, or G and yaw rate sensor
- ASC-ECU malfunction
- Different steering wheel
- Wheel alignment not performed

DIAGNOSIS PROCEDURE

STEP 1. Using M.U.T.-III, diagnose the CAN bus lines.

Using M.U.T.-III, diagnose the CAN bus lines.

Q: Is the check result normal?

www.cargeek.ir

www.CarGeek.ir

YES : Go to Step 3.
NO : Repair the CAN bus lines (Refer to GROUP 54C – CAN Bus Diagnostics Table). After repairing the CAN bus line, go to Step 2.

STEP 2. Diagnosis code recheck after repairing the CAN bus line

Q: Is diagnosis code No.C123B set?
YES : Go to Step 3.
NO : This diagnosis is complete.

STEP 3. M.U.T.-III diagnosis code
Check that diagnosis codes No.C100A, C1015, C1020, C102B, C1011, C101C, C1027, C1032, C1014, C101F, C102A, C1035, C1041, C1042, C1043, C1044, C1219, C2205, C123C, and C2204 are also set.

Q: Are diagnosis codes No.C100A, C1015, C1020, C102B, C1011, C101C, C1027, C1032, C1014, C101F, C102A, C1035, C1041, C1042, C1043, C1044, C1219, C2205, C123C, and C2204 also set?
YES : Carry out the diagnosis for the diagnosis code that is set (Refer to P.35C-16). Then go to Step 10.
NO : Go to Step 4.

STEP 4. Check of G and yaw rate sensor installation status
Check that the G and yaw rate sensor is installed correctly.

Q: Is the check result normal?
YES : After checking the G and yaw rate sensor, perform the calibration of the G and yaw rate sensor to make ASC-ECU relearn the neutral point (Refer to P.35C-182). Then go to Step 5.
NO : Reinstall the G and yaw rate sensor correctly (Refer to P.35C-189). Then go to Step 10.

STEP 5. M.U.T.-III service data
Check the following data list (Refer to P.35C-172).
- Item 08: Lateral G sensor
- Item 09: G sensor
- Item 12: Yaw rate sensor

Q: Is the check result normal?
YES : Go to Step 6.
NO : Replace the G and yaw rate sensor (Refer to P.35C-189). Then go to Step 10.

STEP 6. Check of steering wheel sensor installation status
Check that the steering wheel sensor is installed correctly.

Q: Is the check result normal?
YES : Go to Step 7.
NO : Install the steering wheel sensor correctly (Refer to P.35C-190). Then go to Step 7.

STEP 7. Wheel alignment check
Refer to GROUP 33 – On-vehicles service/Front Wheel Alignment Check and Adjustment .

Q: Is the check result normal?
YES : After checking the wheel alignment, perform the calibration of steering wheel sensor to make ASC-ECU relearn the neutral point (Refer to P.35C-183). Then go to Step 8.
NO : After adjusting the wheel alignment, perform the calibration of steering wheel sensor to make ASC-ECU relearn the neutral point (Refer to P.35C-183). Then go to Step 8.

STEP 8. M.U.T.-III service data
Check the following data list (Refer to P.35C-172).
- Item 11: Steering angle

Q: Is the check result normal?
YES : Go to Step 9.
NO : Replace the steering wheel sensor (Refer to P.35C-190). Then go to Step 10.

STEP 9. Check whether the diagnosis code is reset.
(1) Erase the diagnosis code.
(2) Drive the vehicle at 20 km/h or higher.

Q: Does ASC unnecessary activation occur or is the diagnosis code No. C123B set?
YES : Replace the hydraulic unit (integrated with ASC-ECU) (Refer to P.35C-185). Then go to Step 10.
NO : Intermittent malfunction (Refer to GROUP 00 – How to Use Troubleshooting/How to Cope with Intermittent Malfunctions).

STEP 10. Check whether the diagnosis code is reset.
(1) Erase the diagnosis code.
(2) Drive the vehicle at 20 km/h or higher.

Q: Does ASC unnecessary activation occur or is the diagnosis code No. C123B set?
YES : Return to Step 1.
NO : The procedure is complete.

www.cargeek.ir

www.CarGeek.ir

Code No. C2200 Abnormality in ASC-ECU

⚠ CAUTION

- **If there is any problem in the CAN bus lines, an incorrect diagnosis code may be set. Prior to this diagnosis, diagnose the CAN bus lines (Refer to GROUP 54C – CAN Bus Diagnostics Table).**
- **Whenever ECU is replaced, ensure that the CAN bus lines are normal.**
- **When the hydraulic unit (integrated with ASC-ECU) is replaced, always carry out the calibration of the steering wheel sensor, the G and yaw rate sensor and brake fluid pressure sensor (Refer to P.35C-182, P.35C-183 and P.35C-184).**

OPERATION

ASC-ECU controls ASC by calculating the data sent from the wheel speed sensor, the steering wheel sensor, and the G and yaw rate sensor.

DIAGNOSIS CODE SET CONDITIONS

This diagnosis code is set when ASC-ECU has malfunction.

PROBABLE CAUSES

ASC-ECU malfunction

DIAGNOSIS PROCEDURE

STEP 1. M.U.T.-III CAN bus diagnosis

Use M.U.T.-III to diagnose the CAN bus lines.

Q: Is the check result normal?

YES : Go to Step 2.

NO : Repair the CAN bus lines (Refer to GROUP 54C – CAN Bus Diagnostics Table). On completion, go to Step 2.

STEP 2. Diagnosis code recheck after resetting CAN bus lines

Erase the diagnosis code.

Q: Is diagnosis code No.C2200 set?

YES : Replace the hydraulic unit (integrated with ASC-ECU) (Refer to P.35C-185). Then go to Step 3.

NO : Intermittent malfunction (Refer to GROUP 00 – How to Use Troubleshooting/How to Cope with Intermittent Malfunctions).

STEP 3. Diagnosis code recheck after resetting CAN bus lines

Erase the diagnosis code.

Q: Is diagnosis code No.C2200 set?

YES : Return to Step 1.

NO : This diagnosis is complete.

Code No. C2101 Abnormality in battery voltage (high voltage)

⚠ CAUTION

- **If there is any problem in the CAN bus lines, an incorrect diagnosis code may be set. Prior to this diagnosis, diagnose the CAN bus lines (Refer to GROUP 54C – CAN Bus Diagnostics Table).**
- **Whenever ECU is replaced, ensure that the CAN bus lines are normal.**
- **When the hydraulic unit (integrated with ASC-ECU) is replaced, always carry out the calibration of the steering wheel sensor, the G and yaw rate sensor and brake fluid pressure sensor (Refer to P.35C-182, P.35C-183 and P.35C-184).**

OPERATION

The ASC-ECU is energized by the valve power supply circuit (terminal No.32). When the power is supplied from the ignition switch (IG1) to the IG1 relay in ETACS-ECU, IG1 relay is turned on. At this time, the valve power supply circuit (terminal No.2) energizes the ASC-ECU.

DIAGNOSIS CODE SET CONDITIONS

This diagnosis code is set when the ASC-ECU power supply voltage is more than 18.0 ± 1.0 V.

PROBABLE CAUSES

- Battery failure
- ASC-ECU malfunction
- Charging system failed
- Battery terminal looseness

www.cargeek.ir

www.CarGeek.ir

DIAGNOSIS PROCEDURE

STEP 1. M.U.T.-III CAN bus diagnosis
Use M.U.T.-III to diagnose the CAN bus lines.

Q: Is the check result normal?
YES : Go to Step 3.
NO : Repair the CAN bus lines (Refer to GROUP 54C – CAN Bus Diagnostics Table). On completion, go to Step 2.

STEP 2. Diagnosis code recheck after resetting CAN bus lines

Q: Is the diagnosis code No. C2101 set?
YES : Go to Step 3.
NO : This diagnosis is complete.

STEP 3. Battery check
Refer to GROUP 54A – Battery Test .

Q: Is the battery in good condition?
YES : Go to Step 5.
NO : Charge or replace the battery. Then go to Step 4.

STEP 4. Charging system check
Refer to GROUP 16 – On–vehicle Service/Alternator Output Line Voltage Drop Test .

Q: Is the check result normal?
YES : Go to Step 5.
NO : Repair or replace the charging system component(s).

STEP 5. Check whether the diagnosis code is reset.
Erase the diagnosis code.

Q: Is the diagnosis code No. C2101 set?
YES : Replace the hydraulic unit (integrated with ASC-ECU) (Refer to P.35C-185). Then go to Step 6.
NO : The trouble can be an intermittent malfunction (Refer to GROUP 00 – How to Use Troubleshooting/How to Cope with Intermittent Malfunctions).

STEP 6. Check whether the diagnosis code is reset.
Erase the diagnosis code.

Q: Is the diagnosis code No. C2101 set?
YES : Return to Step 1.
NO : This diagnosis is complete.

Code No. C1395 Brake fluid filling not completed

⚠ CAUTION
- **If there is any problem in the CAN bus lines, an incorrect diagnosis code may be set. Prior to this diagnosis, diagnose the CAN bus lines (Refer to GROUP 54C – CAN Bus Diagnostics Table).**
- **Whenever ECU is replaced, ensure that the CAN bus lines are normal.**
- **When the hydraulic unit (integrated with ASC-ECU) is replaced, always carry out the calibration of the steering wheel sensor, the G and yaw rate sensor and brake fluid pressure sensor (Refer to P.35C-182, P.35C-183 and P.35C-184).**

DIAGNOSIS CODE SET CONDITIONS
This diagnosis code is set when the brake fluid is not filled in the hydraulic unit.

PROBABLE CAUSES
- Different hydraulic unit (For delivery to factory)
- ASC-ECU malfunction

DIAGNOSIS PROCEDURE

STEP 1. M.U.T.-III CAN bus diagnosis
Use M.U.T.-III to diagnose the CAN bus lines.

Q: Is the check result normal?
YES : Go to Step 2.
NO : Repair the CAN bus lines (Refer to GROUP 54C – CAN Bus Diagnostics Table). On completion, go to Step 2.

STEP 2. Check whether the diagnosis code is reset.
Erase the diagnosis code.

Q: Is the diagnosis code No. C1395 set?
YES : Replace the hydraulic unit (integrated with ASC-ECU) (Refer to P.35C-185).
NO : This diagnosis is complete.

www.cargeek.ir

www.CarGeek.ir

Code No. C121C Torque request signal rejection

⚠ CAUTION

- **If there is any problem in the CAN bus lines, an incorrect diagnosis code may be set. Prior to this diagnosis, diagnose the CAN bus lines (Refer to GROUP 54C – CAN Bus Diagnostics Table).**
- **Whenever ECU is replaced, ensure that the CAN bus lines are normal.**
- **Do not drop or shock the G and yaw rate sensor.**
- **When the G and yaw rate sensor is replaced, always carry out calibration to make ASC-ECU learn the neutral point (Refer to P.35C-182).**
- **When the hydraulic unit (integrated with ASC-ECU) is replaced, always carry out the calibration of the steering wheel sensor, the G and yaw rate sensor and brake fluid pressure sensor (Refer to P.35C-182, P.35C-183 and P.35C-184).**

OPERATION

ASC-ECU sends the signal to the engine ECU as necessary to decrease the engine output for the ASC system operation.

DIAGNOSIS CODE SET CONDITIONS

This diagnosis code is set when the request for the decrease of output is rejected by the engine ECU.

PROBABLE CAUSES

- Wrong coding of engine ECU
- Engine ECU malfunction
- ASC-ECU malfunction
- External noise interference

DIAGNOSIS PROCEDURE

STEP 1. M.U.T.-III CAN bus diagnosis

Use M.U.T.-III to diagnose the CAN bus lines.

Q: Is the check result normal?

YES : Go to Step 3.

NO : Repair the CAN bus lines (Refer to GROUP 54C – CAN Bus Diagnostics Table). On completion, go to Step 2.

STEP 2. Diagnosis code recheck after resetting CAN bus lines

Q: Is diagnosis code No.C121C set?

YES : Go to Step 3.

NO : This diagnosis is complete.

STEP 3. M.U.T.-III other system diagnosis code

Use M.U.T.-III to check that the diagnosis code is set in the engine ECU.

Q: Is the diagnosis code set?

YES : Troubleshoot the engine ECU (Refer to GROUP 13A – Troubleshooting/Diagnosis function <4A9>, GROUP 13B – Troubleshooting/Diagnosis function <4B1>, GROUP 13F – Troubleshooting/Diagnosis function <4J1> or GROUP 13C – Troubleshooting/Diagnosis function <4N1>), and then go to Step 7.

NO : Go to Step 4.

STEP 4. M.U.T.-III diagnosis code

Check that diagnosis code No.U1417 is set in ASC-ECU.

Q: Is diagnosis code No.U1417 set?

YES : Troubleshoot for diagnosis code No.U1417 (Refer to P.35C-140). Then go to Step 5.

NO : Replace the hydraulic unit (integrated with ASC-ECU) (Refer to P.35C-185). Then go to Step 7.

STEP 5. M.U.T.-III data list

Check the following data list (Refer to P.35C-172).

- Item 68: Allow ESP torque request

Q: Is the check result normal?

YES : Go to Step 6.

NO : Replace the engine ECU (Refer to GROUP 13A – engine ECU <4A9>, GROUP 13B – engine ECU <4B1>, GROUP 13F – engine ECU <4J1> or GROUP 13C – engine ECU <4N1>), and then go to Step 7.

STEP 6. Check whether the diagnosis code is reset.

Erase the diagnosis code.

Q: Is diagnosis code No.C121C set?

www.cargeek.ir

www.CarGeek.ir

YES : Replace the hydraulic unit (integrated with ASC-ECU) (Refer to P.35C-185). Then go to Step 7.

NO : If the trouble symptom is resolved, an intermittent malfunction such as poorly engaged connector(s) or wiring harness is suspected (Refer to GROUP 00 – How to Use Troubleshooting/How to Cope with Intermittent Malfunctions).

STEP 7. Diagnosis code recheck

Erase the diagnosis code.

Q: Is diagnosis code No.C121C set?

YES : Return to Step 1.

NO : This diagnosis is complete.

Code No. C1290 CAN time-out error

⚠ CAUTION

- **If there is any problem in the CAN bus lines, an incorrect diagnosis code may be set. Prior to this diagnosis, diagnose the CAN bus lines (Refer to GROUP 54C – CAN Bus Diagnostics Table).**
- **If the diagnosis code No.C1290 is set in ASC-ECU, always diagnose the CAN bus line. If there is any fault in the CAN bus lines, an incorrect diagnosis code may be set. In this case, the set diagnosis code is not highly reliable.**
- **Whenever ECU is replaced, ensure that the CAN bus lines are normal.**
- **When the hydraulic unit (integrated with ASC-ECU) is replaced, always carry out the calibration of the steering wheel sensor, the G and yaw rate sensor and brake fluid pressure sensor (Refer to P.35C-182, P.35C-183 and P.35C-184).**
- **When the diagnosis code No.C1290 is set in ASC-ECU, the diagnosis code for another system may also be set. When the diagnosis code for another system is set, carry out diagnosis for that system first.**

OPERATION

ASC-ECU receives signals necessary for the operations of ABS, ASC, and TCL from the engine ECU, CVT-ECU or A/T-ECU, AS&G-ECU, ETACS-ECU, and the steering wheel sensor via the CAN bus lines.

DIAGNOSIS CODE SET CONDITIONS

ASC-ECU receives signals necessary for the operations of ABS, ASC, and TCL from the engine ECU, CVT-ECU or A/T-ECU, AS&G-ECU, ETACS-ECU, and steering wheel sensor via CAN bus lines. This diagnosis code is stored when ASC-ECU cannot receive the signals necessary for the operations of ABS, ASC, and TCL from the engine ECU, CVT-ECU or A/T-ECU, AS&G-ECU, ETACS-ECU, and steering wheel sensor.

PROBABLE CAUSES

- Engine ECU malfunction
- CVT-ECU or A/T-ECU malfunction
- AS&G-ECU malfunction
- Steering wheel sensor malfunction
- Malfunction of the CAN bus
- ASC-ECU malfunction
- Malfunction of ETACS-ECU
- ETACS-ECUs have been interchanged between two vehicles.
- Connector disconnected or improperly connected
- Stretched or broken wires

DIAGNOSIS PROCEDURE

STEP 1. M.U.T.-III CAN bus diagnosis

Use M.U.T.-III to diagnose the CAN bus lines.

Q: Is the check result normal?

YES : Go to Step 2.

NO : Repair the CAN bus lines (Refer to GROUP 54C – CAN Bus Diagnostics Table). On completion, go to Step 6.

STEP 2. M.U.T.-III diagnosis code

Check that the diagnosis codes U0100, U0101, U0126, U0141 or U1004 are set in ASC-ECU.

Q: Is the diagnosis code set?

www.cargeek.ir

www.CarGeek.ir

YES : Troubleshoot for the relevant diagnosis code (Refer to P.35C-16). Then go to Step 6.
NO : Go to Step 3.

STEP 3. M.U.T.-III other system diagnosis code
Using M.U.T.-III, check if the diagnosis codes are set from the engine ECU, CVT-ECU or A/T-ECU, AS&G-ECU, ETACS-ECU, and steering wheel sensor or not.

Q: Is the diagnosis code set?
YES : Troubleshoot the relevant diagnosis code, and then go to Step 6.
NO : Go to Step 4.

STEP 4. ETACS-ECU coding data check
Refer to GROUP 00 – Precautions before Service/ Coding List .

Q: Is the check result normal?
YES : Go to Step 5.
NO : Replace the ETACS-ECU (Refer to GROUP 54A – ETACS-ECU), and then go to Step 6.

STEP 5. Check whether the diagnosis code is reset.
Erase the diagnosis code.

Q: Is the diagnosis code No.C1290 set?
YES : Replace the hydraulic unit (integrated with ASC-ECU) (Refer to P.35C-185). Then go to Step 6.
NO : If the trouble symptom is resolved, an intermittent malfunction such as poorly engaged connector(s) or wiring harness is suspected (Refer to GROUP 00 – How to Use Troubleshooting/How to Cope with Intermittent Malfunctions).

STEP 6. Check whether the diagnosis code is reset.
Erase the diagnosis code.

Q: Is the diagnosis code No.C1290 set?
YES : Return to Step 1.
NO : This diagnosis is complete.

Code No. C2203 VIN not recorded

⚠ CAUTION
- **If there is any problem in the CAN bus lines, an incorrect diagnosis code may be set. Prior to this diagnosis, diagnose the CAN bus lines (Refer to GROUP 54C – CAN Bus Diagnostics Table).**
- **When other diagnosis code for ASC-ECU is set, troubleshoot that diagnosis code first.**
- **Whenever ECU is replaced, ensure that the CAN bus lines are normal.**
- **When the hydraulic unit (integrated with ASC-ECU) is replaced, always carry out the calibration of the steering wheel sensor, the G and yaw rate sensor and brake fluid pressure sensor (Refer to P.35C-182, P.35C-183 and P.35C-184).**

OPERATION
ASC-ECU receives vehicle information from the engine ECU and stores it.

DIAGNOSIS CODE SET CONDITIONS
This diagnosis code is set when ASC-ECU cannot receive the vehicle information from the engine ECU.

PROBABLE CAUSES
- Malfunction of the CAN bus
- Engine ECU malfunction
- ASC-ECU malfunction
- When the ignition switch is turned to the "ON" position for the first time after the ASC-ECU is replaced.

DIAGNOSIS PROCEDURE

STEP 1. M.U.T.-III CAN bus diagnosis
Use M.U.T.-III to diagnose the CAN bus lines.

Q: Is the check result normal?
YES : Go to Step 3.
NO : Repair the CAN bus lines (Refer to GROUP 54C – CAN Bus Diagnostics Table). On completion, go to Step 2.

STEP 2. Diagnosis code recheck after resetting CAN bus lines

Q: Is diagnosis code No.C2203 set?
YES : Go to Step 3.
NO : This diagnosis is complete.

www.cargeek.ir

www.CarGeek.ir

STEP 3. M.U.T.-III diagnosis code
Check that the engine ECU sets a diagnosis code.

Q: Is any diagnosis code set?
YES : Troubleshoot the engine ECU (Refer to GROUP 13A – Troubleshooting/Diagnosis function <4A9>, GROUP 13B – Troubleshooting/Diagnosis function <4B1>, GROUP 13F – Troubleshooting/Diagnosis function <4J1> or GROUP 13C – Troubleshooting/Diagnosis function <4N1>), and then go to Step 5.
NO : Go to Step 4.

STEP 4. Check whether the diagnosis code is reset.

Q: Is diagnosis code No.C2203 set?
YES : Replace the hydraulic unit (integrated with ASC-ECU) (Refer to P.35C-185), and then go to Step 5.
NO : If a trouble is solved, it is determined that there is an intermittent malfunction such as poor engaged connector(s) or open circuit (Refer to GROUP 00 – How to Use Troubleshooting/How to Cope with Intermittent Malfunctions).

STEP 5. Check whether the diagnosis code is reset.
Erase the diagnosis code.

Q: Is diagnosis code No.C2203 set?
YES : Return to Step 1.
NO : This diagnosis is complete.

Code No.C2206 Re-execution of variant coding

⚠ CAUTION
- **If there is any problem in the CAN bus lines, an incorrect diagnosis code may be set. Prior to this diagnosis, diagnose the CAN bus lines (Refer to GROUP 54C – CAN Bus Diagnostics Table).**
- **If diagnosis code No.C2206 is set in ASC-ECU, always diagnose the CAN bus line. If there is any fault in the CAN bus lines, an incorrect diagnosis code may be set. In this case, the set diagnosis code is not highly reliable.**
- **Before replacing the ECU, ensure that the communication circuit is normal.**
- **When diagnosis code No.C2206 is set in ASC-ECU, the diagnosis code may also be set in ETACS-ECU. When the diagnosis code is set in ETACS-ECU, carry out the diagnosis of the diagnosis code for ETACS-ECU first.**
- **When the hydraulic unit (integrated with ASC-ECU) is replaced, always carry out the calibration of the steering wheel sensor, the G and yaw rate sensor and brake fluid pressure sensor (Refer to P.35C-182, P.35C-183 and P.35C-184).**

OPERATION
ASC-ECU receives the vehicle information stored in the ETACS-ECU via CAN bus lines.

DIAGNOSIS CODE SET CONDITIONS
ASC-ECU communicates with ETACS-ECU via CAN bus lines. This diagnosis code is set if the vehicle information-related stored in ETACS-ECU varies from the one stored when the ignition switch was last turned on.

PROBABLE CAUSES
- ETACS-ECU or ASC-ECU which was equipped with other vehicle is used.
- Malfunction of ETACS-ECU
- ASC-ECU malfunction
- External noise interference

DIAGNOSIS PROCEDURE

STEP 1. M.U.T.-III CAN bus diagnostics
Use M.U.T.-III to diagnose the CAN bus lines.

Q: Is the check result normal?
YES : Go to Step 2.
NO : Repair the CAN bus lines (Refer to GROUP 54C – CAN Bus Diagnostics Table). On completion, go to Step 6.

STEP 2. M.U.T.-III diagnosis code
Check that diagnosis code U1415 or U1417 is set in ASC-ECU.

Q: Is the diagnosis code set?
YES : Troubleshoot for the relevant diagnosis code (Refer to P.35C-16).
NO : Go to Step 3.

www.cargeek.ir

www.CarGeek.ir

STEP 3. M.U.T.-III Diagnosis code of other system
Use M.U.T.-III to check that the vehicles information-related diagnosis code is set by the ETACS-ECU.

Q: Is the diagnosis code set?
YES : Troubleshoot the relevant diagnosis code, and then go to Step 4.
NO : Go to Step 6.

STEP 4. ETACS-ECU coding data check

Q: Is the check result normal?
YES : Go to Step 6.
NO : Go to Step 5.

STEP 5. ETACS-ECU variant coding
Perform the variant coding to the ETACS-ECU.

Q: Dose variant coding succeed?
YES : Go to Step 7.
NO : Replace the ETACS-ECU (Refer to GROUP 54A – ETACS-ECU), and then go to Step 7.

STEP 6. Check whether the diagnosis code is reset.
Erase the diagnosis code.

Q: Is diagnosis code No.C2206 set?
YES : Replace the hydraulic unit (integrated with ASC-ECU) (Refer to P.35C-185). Then go to Step 7.
NO : This diagnosis is complete.

STEP 7. Check whether the diagnosis code is reset.
Erase the diagnosis code.

Q: Is diagnosis code No.C2206 set?
YES : Return to Step 1.
NO : This diagnosis is complete.

Code No. C123C Abnormality in G and yaw rate sensor output value (Abnormality in lateral G and yaw rate output value)

G and Yaw Rate Sensor Circuit

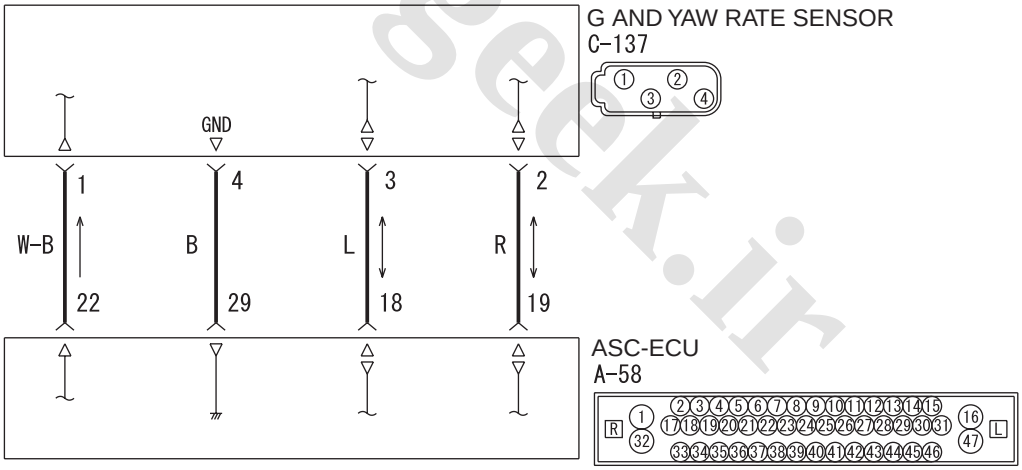

Wire colour code
B : Black LG : Light green G : Green L : Blue W : White Y : Yellow SB : Sky blue
BR : Brown O : Orange GR : Grey R : Red P : Pink V : Violet PU : Purple SI : Silver ACB02567

www.cargeek.ir

www.CarGeek.ir

Connector: A-58 <LHD>

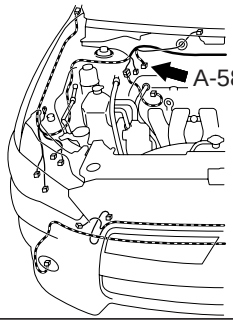

Connector: A-58 <RHD>

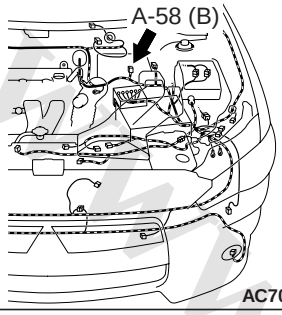

Connector: C-137 <LHD>

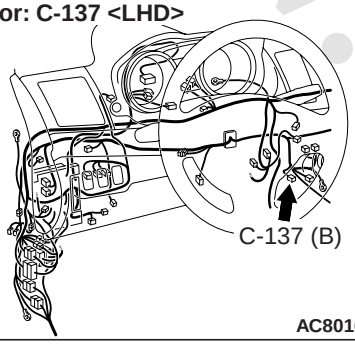

Connector: C-137 <RHD>

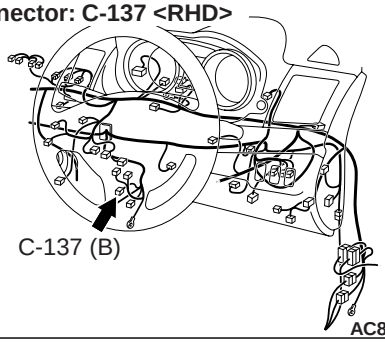

⚠ CAUTION

- **If there is any problem in the CAN bus lines, an incorrect diagnosis code may be set. Prior to this diagnosis, diagnose the CAN bus lines (Refer to GROUP 54C – CAN Bus Diagnostics Table).**
- **Whenever ECU is replaced, ensure that the CAN bus lines are normal.**
- **Do not drop or shock the G and yaw rate sensor.**
- **When the G and yaw rate sensor is replaced, always carry out calibration to make ASC-ECU learn the neutral point (Refer to P.35C-182).**
- **When the hydraulic unit (integrated with ASC-ECU) is replaced, always carry out the calibration of the steering wheel sensor, the G and yaw rate sensor and brake fluid pressure sensor (Refer to P.35C-182, P.35C-183 and P.35C-184).**

OPERATION

ABS-ECU monitors if the output of G and yaw rate sensor is normal or not.

DIAGNOSIS CODE SET CONDITIONS

This diagnosis code is set if any malfunction below is found:

- The output value of lateral G and yaw rate is abnormal.
- When abnormality is detected by comparing the value output from the lateral G and yaw rate sensor with the one from the steering wheel sensor and wheel speed sensor

PROBABLE CAUSES

- Improper installation of the G and yaw rate sensor
- G and yaw rate sensor malfunction
- Steering wheel sensor malfunction
- Improperly installed steering wheel sensor
- Malfunction of wheel speed sensor
- ASC-ECU malfunction
- External noise interference

DIAGNOSIS PROCEDURE

STEP 1. M.U.T.-III CAN bus diagnosis

Use M.U.T.-III to diagnose the CAN bus lines.

Q: Is the check result normal?

YES : Go to Step 2.

NO : Repair the CAN bus lines (Refer to GROUP 54C – CAN Bus Diagnostics Table). On completion, go to Step 2.

www.cargeek.ir

www.CarGeek.ir

STEP 2. M.U.T.-III diagnosis code
Check that the diagnosis code U0125 is set in ASC-ECU.

Q: Is the diagnosis code No.U0125 set?
YES : Troubleshoot for the diagnosis code (Refer to P.35C-133). Then go to Step 3.
NO : Go to Step 3.

STEP 3. Diagnosis code recheck after resetting CAN bus lines

Q: Is the diagnosis code No.C123C set?
YES : Go to Step 4.
NO : This diagnosis is complete.

STEP 4. Check the wheel speed sensor-related or steering wheel sensor-related diagnosis code.
Use M.U.T.-III to check whether the wheel speed sensor-related or steering wheel sensor-related diagnosis code is set or not.

Q: Is the diagnosis code set?
YES : Troubleshoot for the relevant diagnosis code (Refer to P.35C-16).
NO : Go to Step 5.

STEP 5. G and yaw rate sensor installation check
Check that the G and yaw rate sensor is installed correctly.

Q: Is the check result normal?
YES : After checking the G and yaw rate sensor, carry out calibration of the G and yaw rate sensor to make ASC-ECU relearn the neutral point. (Refer to P.35C-182.) Then go to Step 6.
NO : Reinstall the G and yaw rate sensor correctly (Refer to P.35C-189), and then go to Step 12.

STEP 6. M.U.T.-III data list
Check the following data list (Refer to P.35C-172).
- Item 08: Lateral G-sensor
- Item 12: Yaw rate sensor

Q: Is the check result normal?
YES : Go to Step 9.
NO : Go to Step 7.

STEP 7. Connector check: A-58 ASC-ECU connector, C-137 G and yaw rate sensor

Q: Is the check result normal?
YES : Go to Step 8.
NO : Repair the connector, and then go to Step 13.

STEP 8. Check the harness wire between C-137 G and yaw rate sensor connector terminal No. 2, 3 and A-58 ASC-ECU connector No. 18, 19.
- Check the communication lines for open circuit and short circuit.

Q: Is the check result normal?
YES : Replace the G and yaw rate sensor.(Refer to P.35C-189.) Then go to Step 12.
NO : Repair the wiring harness, and then go to Step 13.

STEP 9. Steering wheel sensor installation check
Check that the steering wheel sensor is installed correctly.

Q: Is the check result normal?
YES : Go to Step 10.
NO : Reinstall the steering wheel sensor correctly (Refer to P.35C-190), and then go to Step 10.

STEP 10. Wheel alignment check
Refer to .

Q: Is the check result normal?
YES : After checking the wheel alignment, carry out calibration of steering wheel sensor to make ASC-ECU relearn the neutral point. (Refer to P.35C-183). Then go to Step 11.
NO : After adjusting the wheel alignment, carry out calibration of steering wheel sensor to make ASC-ECU relearn the neutral point (Refer to P.35C-183). Then go to Step 11.

STEP 11. M.U.T.-III data list
Check the following data list (Refer to P.35C-172).
- Item 11: Steering angle sensor

Q: Is the check result normal?
YES : Go to Step 12.
NO : Replace the steering wheel sensor (Refer to P.35C-190), and then go to Step 12.

STEP 12. Check whether the diagnosis code is reset.
(1) Erase the diagnosis code.
(2) Drive the vehicle at 20 km/h or higher.

Q: Is the diagnosis code No.C123C set?

www.cargeek.ir

www.CarGeek.ir

YES : Replace the hydraulic unit (integrated with ASC-ECU) (Refer to P.35C-185), and then go to Step 13.

NO : Intermittent malfunction (Refer to GROUP 00 – How to Use Troubleshooting/How to Cope with Intermittent Malfunctions).

STEP 13. Check whether the diagnosis code is reset.

(1) Erase the diagnosis code.

(2) Drive the vehicle at 20 km/h or higher.

Q: Is the diagnosis code No.C123C set?

YES : Return to Step 1.

NO : This diagnosis is complete.

Code No. C2204 Internal abnormality in G and yaw rate sensor

G and Yaw Rate Sensor Circuit

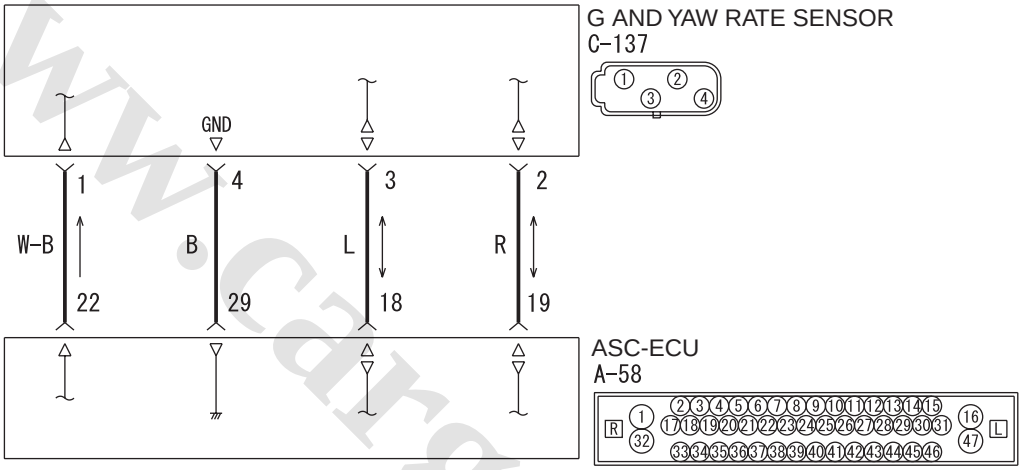

Wire colour code
B : Black LG : Light green G : Green L : Blue W : White Y : Yellow SB : Sky blue
BR : Brown O : Orange GR : Grey R : Red P : Pink V : Violet PU : Purple SI : Silver

ACB02567

Connector: A-58 <LHD>

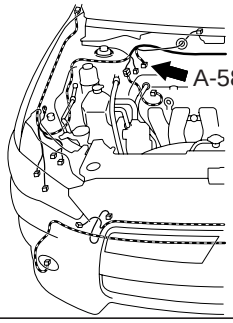

AC612691AO

Connector: C-137 <LHD>

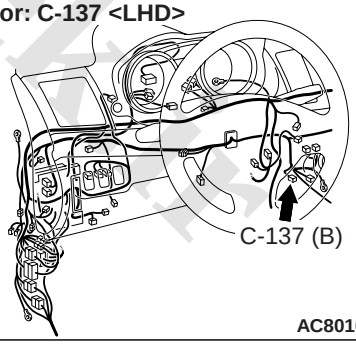

AC801697AO

Connector: A-58 <RHD>

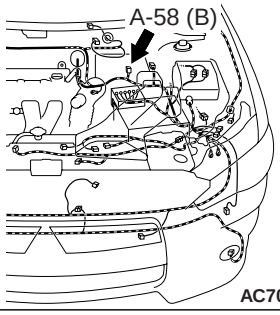

AC701238 AF

Connector: C-137 <RHD>

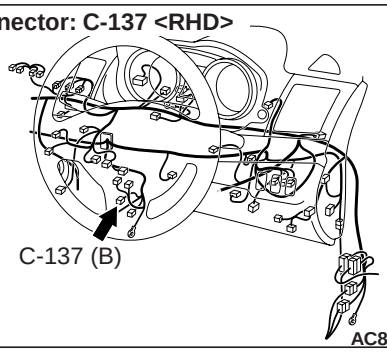

AC801699AK

www.cargeek.ir

www.CarGeek.ir

⚠ CAUTION

- **If there is any problem in the CAN bus lines, an incorrect diagnosis code may be set. Prior to this diagnosis, diagnose the CAN bus lines (Refer to GROUP 54C – CAN Bus Diagnostics Table).**
- **Whenever ECU is replaced, ensure that the CAN bus lines are normal.**
- **Do not drop or shock the G and yaw rate sensor.**
- **When the G and yaw rate sensor is replaced, always carry out calibration to make ASC-ECU learn the neutral point (Refer to P.35C-182).**
- **When the hydraulic unit (integrated with ASC-ECU) is replaced, always carry out the calibration of the steering wheel sensor, the G and yaw rate sensor and brake fluid pressure sensor (Refer to P.35C-182, P.35C-183 and P.35C-184).**

OPERATION

ASC-ECU monitors if the output of G and yaw rate sensor is normal or not.

DIAGNOSIS CODE SET CONDITIONS

This diagnosis code is set if any malfunction below is found:

- When abnormality is detected by the self-diagnosis of the lateral G and yaw rate
- When the output value of the lateral G and yaw rate is not within the standard value range

NOTE: This diagnosis code may be set when G and yaw rate sensor is put on the turntable turning at high speed.

PROBABLE CAUSES

- Improper installation of the G and yaw rate sensor
- Damaged wiring harness and connectors
- G and yaw rate sensor malfunction
- ASC-ECU malfunction

DIAGNOSIS PROCEDURE

STEP 1. M.U.T.-III CAN bus diagnosis

Use M.U.T.-III to diagnose the CAN bus lines.

Q: Is the check result normal?

YES : Go to Step 2.
NO : Repair the CAN bus lines (Refer to GROUP 54C – CAN Bus Diagnostics Table). On completion, go to Step 2.
YES : Go to Step 8.
NO : Repair the wiring harness, and then go to

STEP 2. M.U.T.-III diagnosis code

Check that the diagnosis code U0125 is set in ASC-ECU.

Q: Is the diagnosis code No.U0125 set?

YES : Troubleshoot for the diagnosis code (Refer to P.35C-133). Then go to Step 3.
NO : Go to Step 3.

STEP 3. Diagnosis code recheck after resetting CAN bus lines

Q: Is the diagnosis code No.C2204 set?

YES : Go to Step 4.
NO : This diagnosis is complete.

STEP 4. M.U.T.-III data list

Check the following data list under curb weight condition or one occupant (driver) only in the vehicle, on a flat road.(Refer to P.35C-172)

- Item 08: Lateral G-sensor
- Item 12: Yaw rate sensor
- Item 73: Lateral G sensor offset
- Item 97: Yaw rate sensor offset

Q: Is the check result normal?

YES : Turn the ignition switch to the ON from OFF position. Then go to Step 8.
NO : Go to Step 5.

STEP 5. G and yaw rate sensor installation check

Check that the G and yaw rate sensor is installed correctly.

Q: Is the check result normal?

YES : Go to Step 6.
NO : Reinstall the G and yaw rate sensor correctly (Refer to P.35C-189), and then go to Step 8.

STEP 6. Connector check: A-58 ASC-ECU connector, C-137 G and yaw rate sensor

Q: Is the check result normal?

YES : Go to Step 7.
NO : Repair the connector, and then go to Step 8.

STEP 7. Check the harness wire between C-137 G and yaw rate sensor connector terminal No. 2, 3 and A-58 ASC-ECU connector No. 18, 19.

- Check the communication lines for open circuit and short circuit.

Q: Is the check result normal?

Step 8.

www.cargeek.ir

www.CarGeek.ir

STEP 8. Check whether the diagnosis code is reset.
(1) Erase the diagnosis code.
(2) Drive the vehicle at 20 km/h or higher.

Q: Is the diagnosis code No.C2204 set?
YES : Replace the G and yaw rate sensor.(Refer to P.35C-189), and then go to Step 9.
NO : Intermittent malfunction (Refer to GROUP 00 – How to Use Troubleshooting/How to Cope with Intermittent Malfunctions).

STEP 9. Check whether the diagnosis code is reset.
(1) Erase the diagnosis code.
(2) Drive the vehicle at 20 km/h or higher.

Q: Is the diagnosis code No.C2204 set?
YES : Replace the hydraulic unit (integrated with ASC-ECU) (Refer to P.35C-185), and then go to Step 10.
NO : Intermittent malfunction (Refer to GROUP 00 – How to Use Troubleshooting/How to Cope with Intermittent Malfunctions).

STEP 10. Check whether the diagnosis code is reset.
(1) Erase the diagnosis code.
(2) Drive the vehicle at 20 km/h or higher.

Q: Is the diagnosis code No.C2204 set?
YES : Return to Step 1.
NO : This diagnosis is complete.

Code No. C2111 Brake Fluid Pressure Sensor Power Supply Circuit (Low input)
Code No. C2112 Brake Fluid Pressure Sensor Power Supply Circuit (High input)

⚠ CAUTION
- **If there is any problem in the CAN bus lines, an incorrect diagnosis code may be set. Prior to this diagnosis, diagnose the CAN bus lines (Refer to GROUP 54C – CAN Bus Diagnostics Table).**
- **Whenever ECU is replaced, ensure that the CAN bus lines are normal.**
- **When the hydraulic unit (integrated with ASC-ECU) is replaced, always carry out the calibration of the steering wheel sensor, the G and yaw rate sensor and brake fluid pressure sensor (Refer to P.35C-182, P.35C-183 and P.35C-184).**

OPERATION
When the brake pedal is depressed, the brake fluid pressure sensor integrated in the hydraulic unit detects the brake fluid pressure applied from the master cylinder, converts the pressure value into voltage signal, and outputs it.

DIAGNOSIS CODE SET CONDITIONS
This diagnosis code is set when the voltage applied to the pressure sensor is not within the standard value range.

PROBABLE CAUSES
ASC-ECU malfunction

DIAGNOSIS PROCEDURE

STEP 1. M.U.T.-III CAN bus diagnosis
Use M.U.T.-III to diagnose the CAN bus lines.

Q: Is the check result normal?
YES : Go to Step 3.
NO : Repair the CAN bus lines (Refer to GROUP 54C – CAN Bus Diagnostics Table). On completion, go to Step 2.

STEP 2. Diagnosis code recheck after resetting CAN bus lines

Q: Are the diagnosis codes C2111 or C2112 set?
YES : Go to Step 3.
NO : This diagnosis is complete.

STEP 3. Battery check
Refer to GROUP 54A – Battery Test .

Q: Is the battery in good condition?
YES : Go to Step 4.
NO : Charge or replace the battery, and then go to Step 6.

STEP 4. Charging system check
Refer to GROUP 16 – On–vehicle Service/Alternator Output Line Voltage Drop Test .

Q: Is the charging system in good condition?
YES : Go to Step 5.
NO : Repair or replace the charging system component(s), and then go to Step 6.

www.cargeek.ir

www.CarGeek.ir

STEP 5. Check whether the diagnosis code is reset.
Erase the diagnosis code.

Q: Are the diagnosis codes C2111 or C2112 set?
YES : Replace the hydraulic unit (integrated with ASC-ECU) (Refer to P.35C-185), and then go to Step 6.
NO : Intermittent malfunction (Refer to GROUP 00 – How to Use Troubleshooting/How to Cope with Intermittent Malfunctions).

STEP 6. Check whether the diagnosis code is reset.
Erase the diagnosis code.

Q: Are the diagnosis codes C2111 or C2112 set?
YES : Return to Step 1.
NO : This diagnosis is complete.

Code No. C2114 Abnormality in G and yaw rate sensor operation voltage (Low voltage)
Code No. C2115 Abnormality in G and yaw rate sensor operation voltage (High voltage)

G and Yaw Rate Sensor Circuit

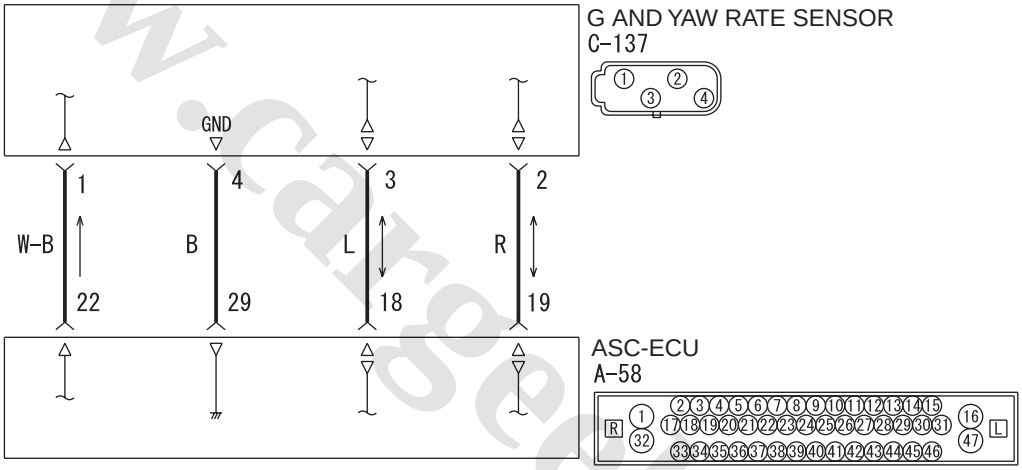

Wire colour code
B : Black LG : Light green G : Green L : Blue W : White Y : Yellow SB : Sky blue
BR : Brown O : Orange GR : Grey R : Red P : Pink V : Violet PU : Purple SI : Silver

ACB02567

Connector: A-58 <LHD>

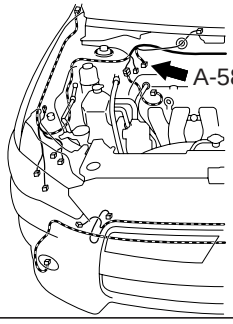

AC612691AO

Connector: A-58 <RHD>

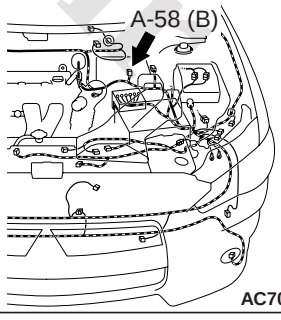

AC701238AF

www.cargeek.ir

www.CarGeek.ir

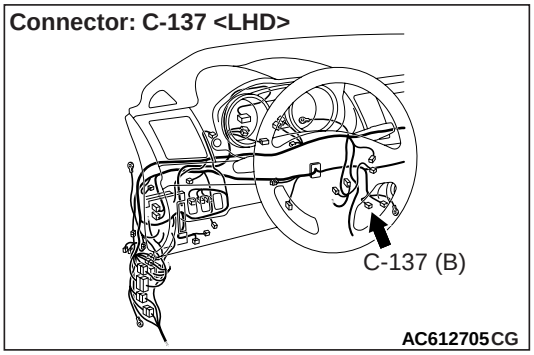

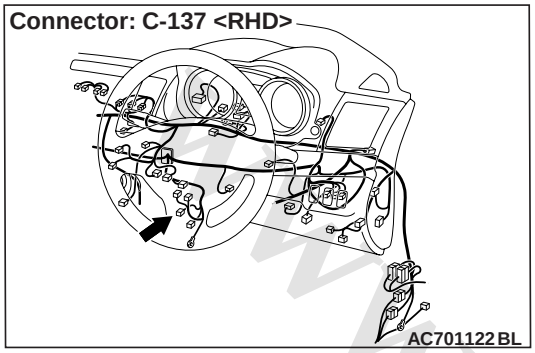

⚠ CAUTION

- **If there is any problem in the CAN bus lines, an incorrect diagnosis code may be set. Prior to this diagnosis, diagnose the CAN bus lines (Refer to GROUP 54C – CAN Bus Diagnostics Table).**
- **Whenever ECU is replaced, ensure that the CAN bus lines are normal.**
- **Do not drop or shock the G and yaw rate sensor.**
- **When the G and yaw rate sensor is replaced, always carry out calibration to make ASC-ECU learn the neutral point (Refer to P.35C-182).**
- **When the hydraulic unit (integrated with ASC-ECU) is replaced, always carry out the calibration of the steering wheel sensor, the G and yaw rate sensor and brake fluid pressure sensor (Refer to P.35C-182, P.35C-183 and P.35C-184).**

OPERATION

- ASC-ECU supplies power to the G and yaw rate sensor at the terminal No.1.
- The G and yaw rate sensor outputs the signal to ASC-ECU via the special CAN bus lines.

DIAGNOSIS CODE SET CONDITIONS

This diagnosis code is set if any malfunction below is found:

Code No. C2114

- When the power supply voltage applied from ASC-ECU to the G and yaw rate sensor is not within the standard value range <low voltage (6.5 ± 0.5 V or less)>

Code No. C2115

- When the power supply voltage applied from ASC-ECU to the G and yaw rate sensor is not within the standard value range <high voltage (18.0 ± 1.0 V or more)>

PROBABLE CAUSES

- Damaged wiring harness and connectors
- G and yaw rate sensor malfunction
- ASC-ECU malfunction

DIAGNOSIS PROCEDURE

STEP 1. M.U.T.-III CAN bus diagnosis

Use M.U.T.-III to diagnose the CAN bus lines.

Q: Is the check result normal?

YES : Go to Step 2.
NO : Repair the CAN bus lines (Refer to GROUP 54C – CAN Bus Diagnostics Table). On completion, go to Step 2.

STEP 2. M.U.T.-III diagnosis code

Check that the diagnosis code No.U0125 is set in ASC-ECU.

Q: Is the diagnosis code No.U0125 set?

YES : Troubleshoot for the diagnosis code (Refer to P.35C-133). Then go to Step 3.
NO : Go to Step 3.

STEP 3. Diagnosis code recheck

Q: Are the diagnosis codes No. C2114 or C2115 set?

YES : Go to Step 4.
NO : This diagnosis is complete.

STEP 4. M.U.T.-III data list

Check the following data list (Refer to P.35C-172).

- Item 08: Lateral G sensor
- Item 09: G sensor
- Item 12: Yaw rate sensor

Q: Is the check result normal?

YES : Go to Step 12.
NO : Go to Step 5.

www.cargeek.ir

www.CarGeek.ir

STEP 5. Connector check: A-58 ASC-ECU connector, C-137 G and yaw rate sensor connector

Q: Is the check result normal?
YES : Go to Step 6.
NO : Repair the defective connector.

STEP 6. Check the harness wire between C-137 G and yaw rate sensor connector terminal No. 2, 3 and A-58 ASC-ECU connector No. 18, 19.

- Check the communication lines for open circuit and short circuit.

Q: Is the check result normal?
YES : Go to Step 7.
NO : Repair the wiring harness, and then go to Step 13.

STEP 7. G and yaw rate sensor installation check

Check that the G and yaw rate sensor is installed correctly.

Q: Is the check result normal?
YES : Go to Step 8.
NO : Reinstall the G and yaw rate sensor correctly (Refer to P.35C-189), and then go to Step 13.

STEP 8. Voltage measurement at C-137 G and yaw rate sensor connector

(1) Disconnect the C-137 G and yaw rate sensor connector.
(2) Turn the ignition switch to the "ON" position.
(3) Measure the voltage between the terminal No.1 and the body earth.

OK: Approximately system voltage

Q: Is the check result normal?
YES : Go to Step 11.
NO : Go to Step 9.

STEP 9. Voltage measurement at A-58 ASC-ECU connector

(1) Disconnect the ASC-ECU connector, connect the ASC check harness (Special tool: MB991997) to the ASC-ECU-side connector and harness-side connector, and then measure at the special tool connector side.
(2) Disconnect the C-137 G and yaw rate sensor connector.
(3) Turn the ignition switch to the "ON" position.

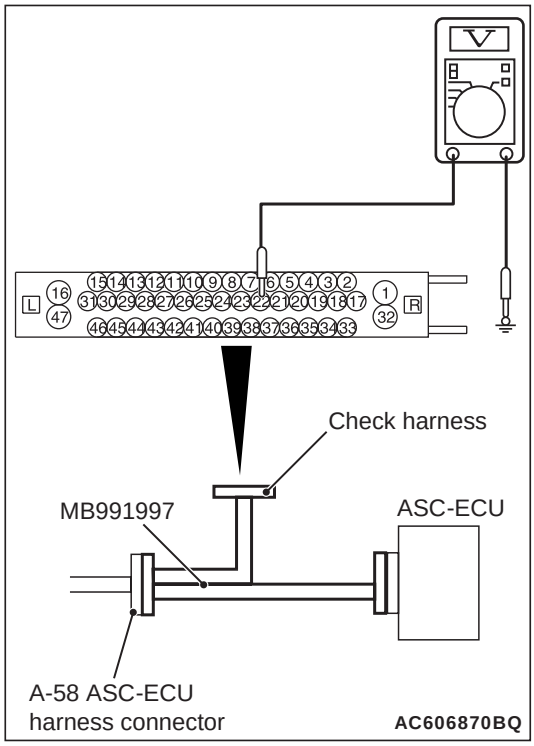

(4) Measure the voltage between the terminal No.22 and the body earth.

OK: Approximately system voltage

Q: Is the check result normal?
YES : Go to Step 12.
NO : Go to Step 10.

STEP 10. Wiring harness check between A-58 ASC-ECU connector terminal No.22 and C-137 G and yaw rate sensor connector terminal No.1.

- Check the power supply circuit for short circuit.

Q: Is the check result normal?
YES : Go to Step 12.
NO : Repair the wiring harness between A-58 ASC-ECU connector terminal No.22 and C-137 G and yaw rate sensor connector terminal No.1.

STEP 11. Wiring harness check between A-58 ASC-ECU connector terminal No.29 and C-137 G and yaw rate sensor connector terminal No.4.

- Check the earth circuit for open circuit.

Q: Is the check result normal?
YES : Replace the G and yaw rate sensor (Refer to P.35C-189) and then go to Step 12.
NO : Repair the wiring harness between A-58 ASC-ECU connector terminal No.29 and C-137 G and yaw rate sensor connector terminal No.4.

www.cargeek.ir

www.CarGeek.ir

STEP 12. Check whether the diagnosis code is reset.
(1) Erase the diagnosis code.
(2) Drive the vehicle at 20 km/h or higher.

Q: Are the diagnosis codes No.C2114 or C2115 set?
YES : Replace the hydraulic unit (integrated with ASC-ECU) (Refer to P.35C-185), and then go to Step 13.
NO : Intermittent malfunction (Refer to GROUP 00 – How to Use Troubleshooting/How to Cope with Intermittent Malfunctions).

STEP 13. Check whether the diagnosis code is reset.
(1) Erase the diagnosis code.
(2) Drive the vehicle at 20 km/h or higher.

Q: Are the diagnosis codes No.C2114 or C2115 set?
YES : Return to Step 1.
NO : This diagnosis is complete.

Code No. C123A: Abnormality in sensor calibration

⚠ CAUTION
- **If there is any problem in the CAN bus lines, an incorrect diagnosis code may be set. Prior to this diagnosis, diagnose the CAN bus lines (Refer to GROUP 54C – CAN Bus Diagnostics Table).**
- **Whenever ECU is replaced, ensure that the CAN bus lines are normal.**
- **Do not drop or shock the G and yaw rate sensor.**
- **When the steering wheel sensor is replaced, always carry out calibration to make ASC-ECU learn the neutral point (Refer to P.35C-183).**
- **When the G and yaw rate sensor is replaced, always carry out calibration to make ASC-ECU learn the neutral point (Refer to P.35C-182).**
- **When the hydraulic unit (integrated with ASC-ECU) is replaced, always carry out the calibration of the steering wheel sensor, the G and yaw rate sensor and brake fluid pressure sensor (Refer to P.35C-182, P.35C-183 and P.35C-184).**

OPERATION
ASC-ECU stores the calibrated value of the G and yaw rate sensor, steering wheel sensor, and brake fluid pressure sensor.

DIAGNOSIS CODE SET CONDITIONS
This diagnosis code is set when the calibrated value for each sensor stored in ASC-ECU is not within the predetermined range.
- Abnormality in neutral position of the G and yaw rate sensor
- Abnormality in neutral position of the steering wheel sensor
- Abnormality in neutral position of the brake fluid pressure sensor

PROBABLE CAUSES
- Improper installation of G and yaw rate sensor or steering wheel sensor
- ASC-ECU malfunction
- External noise interference

DIAGNOSIS PROCEDURE

STEP 1. M.U.T.-III CAN bus diagnostics
Use M.U.T.-III to diagnose the CAN bus lines.

Q: Is the check result normal?
YES : Go to Step 3.
NO : Repair the CAN bus lines (Refer to GROUP 54C – CAN Bus Diagnostics Table). On completion, go to Step 2.

STEP 2. Diagnosis code recheck after resetting CAN bus lines

Q: Is diagnosis code No.C123A set?
YES : Go to Step 3.
NO : This diagnosis is complete.

STEP 3. Check other diagnosis code is set.
Check if the diagnosis code related to the G and yaw rate sensor and the steering wheel sensor is set.

Q: Is any diagnosis code set?
YES : Perform the diagnosis for the relevant diagnosis code (Refer to P.35C-16.)
NO : Go to Step 4.

www.cargeek.ir

www.CarGeek.ir

STEP 4. G and yaw rate sensor calibration
Perform the calibration of G and yaw rate sensor (Refer to P.35C-182.)

Q: Has the calibration succeeded?
YES : Go to Step 5.
NO : Replace the hydraulic unit (integrated with ASC-ECU) (Refer to P.35C-185), and then go to Step 8.

STEP 5. Steering wheel sensor calibration
Perform the calibration of steering wheel sensor (Refer to P.35C-183).

Q: Has the calibration succeeded?
YES : Go to Step 6.
NO : Replace the hydraulic unit (integrated with ASC-ECU) (Refer to P.35C-185), and then go to Step 8.

STEP 6. Brake fluid pressure sensor calibration
Perform the calibration of brake fluid pressure sensor (Refer to P.35C-184).

Q: Has the calibration succeeded?
YES : Go to Step 7.
NO : Replace the hydraulic unit (integrated with ASC-ECU) (Refer to P.35C-185), and then go to Step 8.

STEP 7. Check whether the diagnosis code is reset.
Erase the diagnosis code.

Q: Is diagnosis code No.C123A set?
NO : Replace the hydraulic unit (integrated with ASC-ECU) (Refer to P.35C-185), and then go to Step 8.
NO : Intermittent malfunction (Refer to GROUP 00 – How to Use Troubleshooting/How to Cope with Intermittent Malfunctions).

STEP 8. Check whether the diagnosis code is reset.
Erase the diagnosis code.

Q: Is diagnosis code No.C123A set?
YES : Return to Step 1.
NO : This diagnosis is complete.

Code No. C1219 Abnormality in steering wheel sensor signal

⚠ CAUTION
- **If there is any problem in the CAN bus lines, an incorrect diagnosis code may be set. Prior to this diagnosis, diagnose the CAN bus lines (Refer to GROUP 54C – CAN Bus Diagnostics Table).**
- **Whenever ECU is replaced, ensure that the CAN bus lines are normal.**
- **When the steering wheel sensor is replaced, always carry out calibration to make ASC-ECU learn the neutral point (Refer to P.35C-183).**
- **Do not drop or shock the G and yaw rate sensor.**
- **When the G and yaw rate sensor is replaced, always carry out calibration to make ASC-ECU learn the neutral point (Refer to P.35C-182).**
- **When the hydraulic unit (integrated with ASC-ECU) is replaced, always carry out the calibration of the steering wheel sensor, the G and yaw rate sensor and brake fluid pressure sensor (Refer to P.35C-182, P.35C-183 and P.35C-184).**

OPERATION
Steering wheel sensor outputs the signal to ASC-ECU via the CAN bus lines.

DIAGNOSIS CODE SET CONDITIONS
This diagnosis code is set if any malfunction below is found:
- The tolerance of neutral position of steering wheel sensor exceeds the specified range.
- Abnormality in steering wheel sensor output value
- When abnormality is detected by comparing the value output from the steering wheel sensor with the one from the wheel speed sensor and the G and yaw rate sensor.

PROBABLE CAUSES
- Improper installation of steering wheel sensor
- Wheel alignment not performed
- Steering wheel sensor malfunction
- Different steering wheel
- G and yaw rate sensor malfunction
- Malfunction of wheel speed sensor
- ASC-ECU malfunction
- External noise interference

www.cargeek.ir

www.CarGeek.ir

DIAGNOSIS PROCEDURE

STEP 1. M.U.T.-III CAN bus diagnostics

Use M.U.T.-III to diagnose the CAN bus lines.

Q: Is the check result normal?

YES : Go to Step 3.

NO : Repair the CAN bus lines (Refer to GROUP 54C – CAN Bus Diagnostics Table). On completion, go to Step 2.

STEP 2. Diagnosis code recheck after resetting CAN bus lines

Q: Is diagnosis code No.C1219 set?

YES : Go to Step 3.

NO : This diagnosis is complete.

STEP 3. M.U.T.-III diagnosis code

Check that the wheel speed sensor-related, G and yaw rate sensor-related, or steering wheel sensor-related diagnosis code is set.

Q: Is the diagnosis code set?

YES : Troubleshoot the relevant diagnosis code, and then go to Step 8.

NO : Go to Step 4.

STEP 4. Check how steering wheel sensor is installed.

Check that the steering wheel sensor is installed correctly (Refer to P.35C-190).

Q: Is the check result normal?

YES : Go to Step 5.

NO : Install the steering wheel sensor correctly (Refer to P.35C-190), and then go to Step 5.

STEP 5. G and yaw rate sensor installation check

Check that the G and yaw rate sensor is installed correctly.

Q: Is the check result normal?

YES : Go to Step 6.

NO : Reinstall the G and yaw rate sensor correctly (Refer to P.35C-189), and then go to Step 6.

STEP 6. Wheel alignment check

Q: Is the check result normal?

YES : After the wheel alignment check, perform the steering wheel sensor calibration to make ASC-ECU learn the neutral point again (Refer to P.35C-183). Then go to Step 7.

NO : After the adjustment of the wheel alignment, perform the steering wheel sensor calibration to make ASC-ECU learn the neutral position again (Refer to P.35C-183). Then go to Step 7.

STEP 7. M.U.T.-III data list

Check the following data list (Refer to P.35C-172).

- Item 11: Steering angle

Q: Is the check result normal?

YES : Go to Step 8.

NO : After the steering wheel sensor is replaced, perform the steering wheel sensor calibration to make ASC-ECU learn the neutral point again (Refer to P.35C-183). Then go to Step 9.

STEP 8. Check whether the diagnosis code is reset.

(1) Erase the diagnosis code.

(2) Drive the vehicle at 20 km/h or higher.

Q: Is diagnosis code No.C1219 set?

YES : Replace the hydraulic unit (integrated with ASC-ECU) (Refer to P.35C-185), and then go to Step 9.

NO : This diagnosis is complete.

STEP 9. Check whether the diagnosis code is reset.

(1) Erase the diagnosis code.

(2) Drive the vehicle at 20 km/h or higher.

Q: Is diagnosis code No.C1219 set?

YES : Return to Step 1.

NO : This diagnosis is complete.

www.cargeek.ir

www.CarGeek.ir

Code No. C121A Abnormality in steering wheel sensor calibration

⚠ CAUTION

- **If there is any problem in the CAN bus lines, an incorrect diagnosis code may be set. Prior to this diagnosis, diagnose the CAN bus lines (Refer to GROUP 54C – CAN Bus Diagnostics Table).**
- **Whenever ECU is replaced, ensure that the CAN bus lines are normal.**
- **When the steering wheel sensor is replaced, always carry out calibration to make ASC-ECU learn the neutral point (Refer to P.35C-183).**
- **When the hydraulic unit (integrated with ASC-ECU) is replaced, always carry out the calibration of the steering wheel sensor, the G and yaw rate sensor and brake fluid pressure sensor (Refer to P.35C-182, P.35C-183 and P.35C-184).**

OPERATION

Steering wheel sensor stores the neutral position learned by M.U.T.-III. When the neutral position has not been stored in the steering wheel sensor yet, the steering wheel sensor outputs the signal indicating that it does not have neutral position.

DIAGNOSIS CODE SET CONDITIONS

This diagnosis code is set when ASC-ECU detects that the steering wheel sensor has not learned the neutral position yet.

PROBABLE CAUSES

- Neutral position of steering wheel sensor not learned
- Steering wheel sensor malfunction
- ASC-ECU malfunction

DIAGNOSIS PROCEDURE

STEP 1. M.U.T.-III CAN bus diagnostics

Use M.U.T.-III to diagnose the CAN bus lines.

Q: Is the check result normal?

YES : Go to Step 3.
NO : Repair the CAN bus lines (Refer to GROUP 54C – CAN Bus Diagnostics Table). On completion, go to Step 2.

STEP 2. Diagnosis code recheck after resetting CAN bus lines

Q: Is diagnosis code No.C121A set?

YES : Go to Step 3.
NO : This diagnosis is complete.

STEP 3. Steering wheel sensor calibration

Perform calibration of steering wheel sensor (Refer to P.35C-183).

Q: Has the calibration succeeded?

YES : Go to Step 4.
NO : After the steering wheel sensor is replaced, perform the steering wheel sensor calibration to make ASC-ECU learn the neutral point again (Refer to P.35C-183). Then go to Step 4.

STEP 4. Check whether the diagnosis code is reset.

Erase the diagnosis code.

Q: Is diagnosis code No.C121A set?

YES : Replace the hydraulic unit (integrated with ASC-ECU) (Refer to P.35C-185), and then go to Step 5.
NO : This diagnosis is complete.

STEP 5. Check whether the diagnosis code is reset.

Erase the diagnosis code.

Q: Is diagnosis code No.C121A set?

YES : Return to Step 1.
NO : This diagnosis is complete.

www.cargeek.ir

www.CarGeek.ir

Code No. C2205: Internal malfunction of steering wheel sensor

⚠ CAUTION

- **If there is any problem in the CAN bus lines, an incorrect diagnosis code may be set. Prior to this diagnosis, diagnose the CAN bus lines (Refer to GROUP 54C – CAN Bus Diagnostics Table).**
- **Whenever ECU is replaced, ensure that the CAN bus lines are normal.**
- **When the steering wheel sensor is replaced, always carry out calibration to make ASC-ECU learn the neutral point (Refer to P.35C-183).**
- **When the hydraulic unit (integrated with ASC-ECU) is replaced, always carry out the calibration of the steering wheel sensor, the G and yaw rate sensor and brake fluid pressure sensor (Refer to P.35C-182, P.35C-183 and P.35C-184).**

OPERATION

Steering wheel sensor sends its status signal to ASC-ECU.

DIAGNOSIS CODE SET CONDITIONS

This diagnosis code is set when ASC-ECU detects that the steering wheel sensor has malfunction.

PROBABLE CAUSES

- Steering wheel sensor malfunction
- ASC-ECU malfunction
- External noise interference

DIAGNOSIS PROCEDURE

STEP 1. M.U.T.-III CAN bus diagnostics

Use M.U.T.-III to diagnose the CAN bus lines.

Q: Is the check result normal?

YES : Go to Step 2.

NO : Repair the CAN bus lines (Refer to GROUP 54C – CAN Bus Diagnostics Table). On completion, go to Step 4.

STEP 2. Check whether the diagnosis code is reset.

Q: Is diagnosis code No.C2205 set?

YES : Replace the steering wheel sensor (Refer to P.35C-190), and then go to Step 3.

NO : This diagnosis is complete.

STEP 3. Check whether the diagnosis code is reset.

Erase the diagnosis code.

Q: Is diagnosis code No.C2205 set?

YES : Replace the hydraulic unit (integrated with ASC-ECU) (Refer to P.35C-185), and then go to Step 4.

NO : This diagnosis is complete.

STEP 4. Check whether the diagnosis code is reset.

Erase the diagnosis code.

Q: Is diagnosis code No.C2205 set?

YES : Return to Step 1.

NO : This diagnosis is complete.

Code No.C2002: Valve calibration not completed

⚠ CAUTION

- **If there is any problem in the CAN bus lines, an incorrect diagnosis code may be set. Prior to this diagnosis, diagnose the CAN bus lines (Refer to GROUP 54C – CAN Bus Diagnostics Table).**
- **Whenever ECU is replaced, ensure that the CAN bus lines are normal.**
- **When the hydraulic unit (integrated with ASC-ECU) is replaced, always carry out the calibration of the steering wheel sensor, the G and yaw rate sensor and brake fluid pressure sensor (Refer to P.35C-182, P.35C-183 and P.35C-184).**

OPERATION

Perform the master cylinder pressure sensor calibration to store the calibrated value in the ASC-ECU. At the same time, the calibrated value of cut valve and inlet valve are stored.

www.cargeek.ir

www.CarGeek.ir

DIAGNOSIS CODE SET CONDITIONS
This diagnosis code is set when the calibrated values for cut valve and inlet valve stored in ASC-ECU are not within the predetermined range.

PROBABLE CAUSES
- ASC-ECU malfunction
- Noise interference

DIAGNOSTIC PROCEDURE

STEP 1. M.U.T.-III CAN bus diagnostics
Use M.U.T.-III to diagnose the CAN bus lines.

Q: Is the check result normal?
YES : Go to Step 3.
NO : Repair the CAN bus lines (Refer to GROUP 54C – CAN Bus Diagnostics Table). On completion, go to Step 2.

STEP 2. Diagnosis code recheck after resetting CAN bus lines

Q: Is diagnosis code No.C2002 set?
YES : Replace the hydraulic unit (integrated with ASC-ECU) (Refer to P.35C-185). Then go to Step 3.
NO : This diagnosis is complete.

STEP 3. Check whether the diagnosis code is reset.
Erase the diagnosis code.

Q: Is diagnosis code No.C2002 set?
YES : Return to Step 1.
NO : This diagnosis is complete.

Code No.C2003: Control parameter not implement

⚠ CAUTION
- **If there is any problem in the CAN bus lines, an incorrect diagnosis code may be set. Prior to this diagnosis, diagnose the CAN bus lines (Refer to GROUP 54C – CAN Bus Diagnostics Table).**
- **If there is any problem in the CAN bus lines, an incorrect diagnosis code may be set. Prior to this diagnosis, diagnose the CAN bus lines.**
- **If diagnosis code No.C2003 is set in ASC-ECU, always diagnose the CAN bus line. If there is any fault in the CAN bus lines, an incorrect diagnosis code may be set. In this case, the set diagnosis code is not highly reliable.**
- **Before replacing the ECU, ensure that the communication circuit is normal.**
- **When diagnosis code No.C2003 is set in ASC-ECU, the diagnosis code may also be set in ETACS-ECU. When the diagnosis code is set in ETACS-ECU, carry out the diagnosis of the diagnosis code for ETACS-ECU first.**
- **When the hydraulic unit (integrated with ASC-ECU) is replaced, always carry out the calibration of the steering wheel sensor, the G and yaw rate sensor and brake fluid pressure sensor (Refer to P.35C-182, P.35C-183 and P.35C-184).**

OPERATION
ASC-ECU receives the vehicle information stored in the ETACS-ECU via CAN bus lines.

DIAGNOSIS CODE SET CONDITIONS
When received unset coding data from the ETACS-ECU, this diagnosis code is set.

PROBABLE CAUSES
- Malfunction of ETACS-ECU
- Engine ECU malfunction
- ETACS-ECUs have been interchanged between two vehicles.
- ASC-ECU malfunction
- ASC-ECUs have been interchanged between two vehicles.
- ETACS-ECU or ASC-ECU installation error
- Malfunction of ETACS-ECU coding data

DIAGNOSIS PROCEDURE

STEP 1. M.U.T.-III CAN bus diagnostics
Use M.U.T.-III to diagnose the CAN bus lines.

Q: Is the check result normal?
YES : Go to Step 3.
NO : Repair the CAN bus lines (Refer to GROUP 54C – CAN Bus Diagnostics Table). On completion, go to Step 2.

www.cargeek.ir

www.CarGeek.ir

STEP 2. Diagnosis code recheck after resetting CAN bus lines

Q: Is diagnosis code No.C2003 set?
YES : Go to Step 3.
NO : This diagnosis is complete.

STEP 3. M.U.T.-III other system diagnosis code
Use M.U.T.-III to check whether any coding-related diagnosis code is set by ETACS-ECU.

Q: Is the diagnosis code set?
YES : Troubleshoot for the relevant diagnosis code.
NO : Go to Step 4.

STEP 4. Check part number of ASC-ECU
Check the part number of ASC-ECU.

Q: Is the check result normal?
YES : Go to Step 5.
NO : Replace the hydraulic unit (integrated with ASC-ECU) (Refer to P.35C-185). Then go to Step 8.

STEP 5. ETACS-ECU coding data check
Refer to GROUP 00 – Precautions before Service/ Coding List .

Q: Is the check result normal?
YES : Go to Step 6.
NO : Replace the ETACS-ECU (Refer to GROUP 54A – ETACS-ECU).

STEP 6. Check part number of ETACS-ECU
Check the part number of ETACS-ECU.

Q: Is the check result normal?
YES : Go to Step 7.
NO : Replace the ETACS-ECU (Refer to GROUP 54A – ETACS-ECU).

STEP 7. Check whether the diagnosis code is reset.
Erase the diagnosis code.

Q: Is diagnosis code No.C2003 set?
YES : Replace the hydraulic unit (integrated with ASC-ECU) (Refer to P.35C-185). Then go to Step 8.
NO : The trouble can be an intermittent malfunction (Refer to GROUP 00 – How to Use Troubleshooting/How to Cope with Intermittent Malfunctions).

STEP 8. Check whether the diagnosis code is reset.
Erase the diagnosis code.

Q: Is diagnosis code No.C2003 set?
YES : Return to Step 1.
NO : This diagnosis is complete.

www.cargeek.ir

www.CarGeek.ir

Code No. C1608 Implausible diagnosis data

Solenoid Valve, Motor and ASC-ECU Power Source Circuit

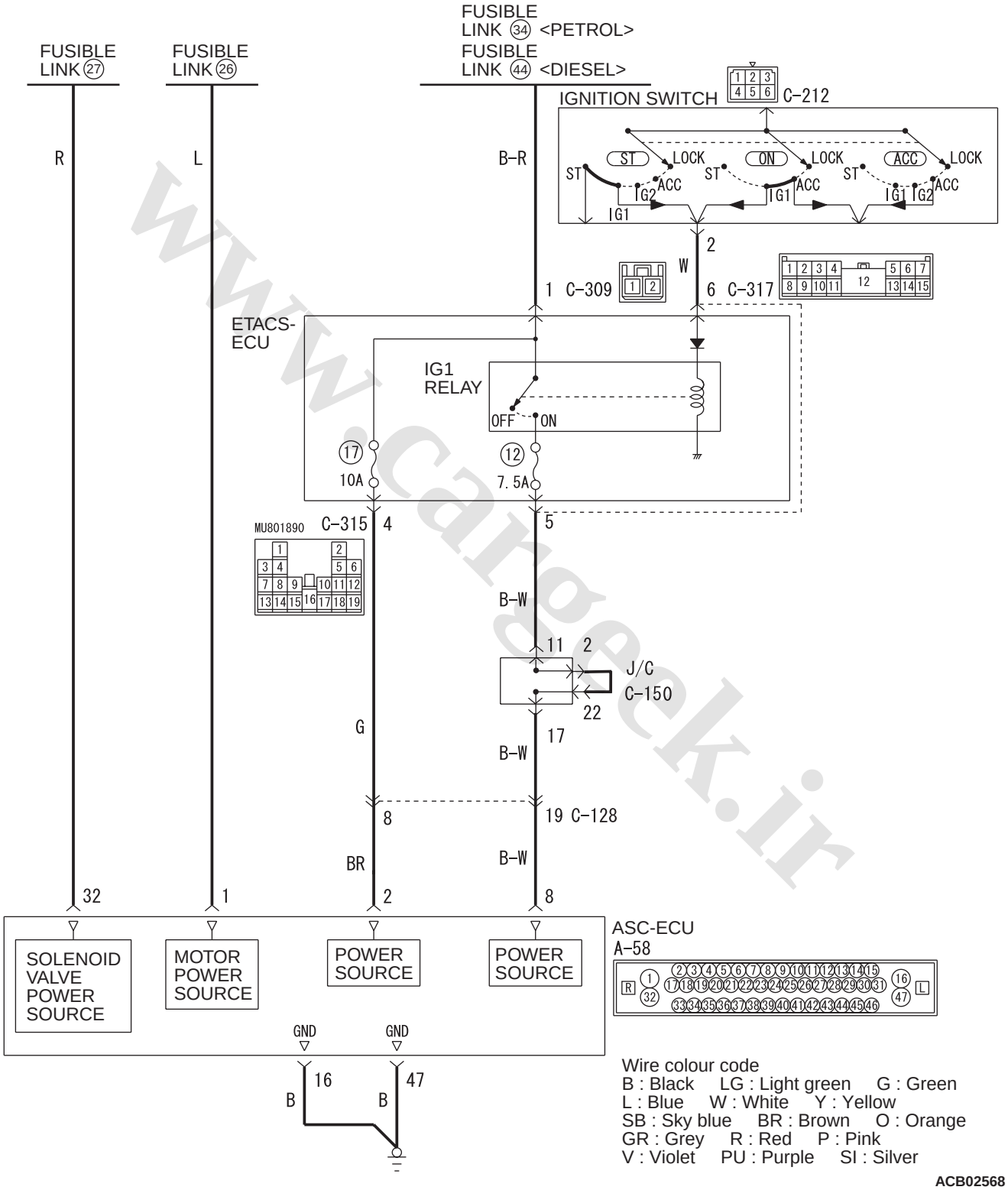

www.cargeek.ir

www.CarGeek.ir

Connector: A-58 <LHD>

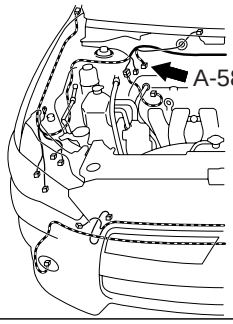

Connector: A-58 <RHD>

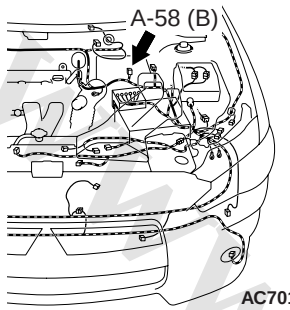

⚠ CAUTION

- **If there is any problem in the CAN bus lines, an incorrect diagnosis code may be set. Prior to this diagnosis, diagnose the CAN bus lines (Refer to GROUP 54C – CAN Bus Diagnostics Table).**
- **Whenever ECU is replaced, ensure that the CAN bus lines are normal.**
- **When the hydraulic unit (integrated with ASC-ECU) is replaced, always carry out the calibration of the steering wheel sensor, the G and yaw rate sensor and brake fluid pressure sensor (Refer to P.35C-182, P.35C-183 and P.35C-184).**

OPERATION

The ASC-ECU stores diagnosis codes and failure information in the EEPROM*.

ASC-ECU (EEPROM*)contains the power supply circuit (terminal No.2).

*NOTE: *:EEPROM (Electrical Erasable and Programmable ROM)*

DIAGNOSIS CODE SET CONDITIONS

- This diagnosis code is set when the failure information stored in the EEPROM is not reliable. The failure information stored in the past is not output, and only this diagnosis code is set.
- This diagnosis code may occur when ASC-ECU power supply shutdown or drop while ASC-ECU is writing a data to the EEPROM.

PROBABLE CAUSES

- Disconnection of the ASC-ECU connector or the battery terminal when the ignition switch is ON
- Loose battery terminal
- Abnormality in battery
- Damaged wiring harness and connectors
- ASC-ECU malfunction

DIAGNOSIS PROCEDURE

STEP 1. M.U.T.-III CAN bus diagnosis

Use M.U.T.-III to diagnose the CAN bus lines.

Q: Is the check result normal?

YES : Go to Step 3.

NO : Repair the CAN bus lines (Refer to GROUP 54C – CAN Bus Diagnostics Table). On completion, go to Step 2.

STEP 2. Diagnosis code recheck after resetting CAN bus lines

Q: Is diagnosis code No. C1608 set?

YES : Go to Step 3.

NO : The procedure is complete.

STEP 3. Battery check

Refer to GROUP 54A – Battery Test .

Q: Is the battery in good condition?

YES : Go to Step 5.

NO : Go to Step 4.

STEP 4. Charging system check

Refer to GROUP 16 – On–vehicle Service/Alternator Output Line Voltage Drop Test .

Q: Is the charging system in good condition?

YES : Replace the battery. Then go to Step 9.

NO : Repair or replace the charging system component(s).

www.cargeek.ir

www.CarGeek.ir

STEP 5. Voltage measurement at the A-58 ASC-ECU connector

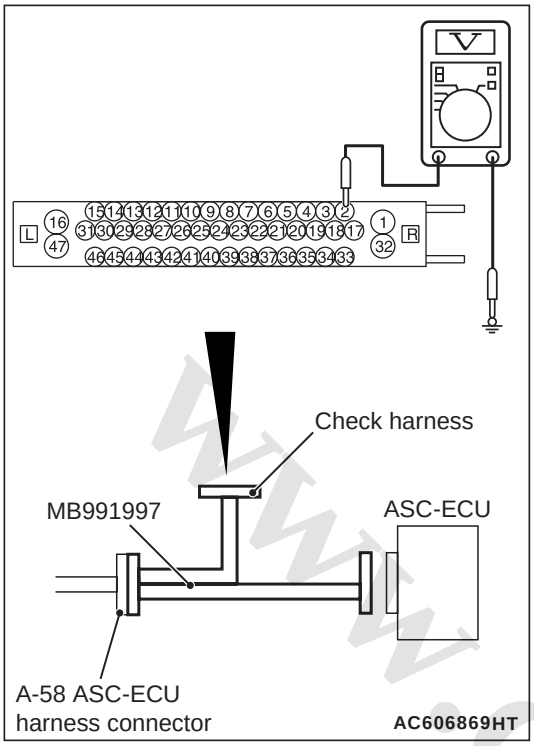

(1) Disconnect the ASC-ECU connector, connect special tool ASC check harness (MB991997) to the harness-side connector, and then measure the voltage at the special tool connector side.

NOTE: Do not connect the special tool ASC check harness (MB991997) to ASC-ECU.

(2) Turn the ignition switch to the ON position.

(3) Measure the voltage between the terminal No.2 and the body earth.

OK: Approximately system voltage

Q: Is the check result normal?

YES : Go to Step 7.

NO : Go to Step 6.

STEP 6. Connector check: A-58 ASC-ECU connector

Q: Is the check result normal?

YES : The open or short circuit may be present in the power supply circuit. Repair the wiring harness between the A-58 ASC-ECU connector terminal No.2 and the fuse No.17.

NO : Repair the defective connector.

STEP 7. Resistance measurement at A-58 ASC-ECU connector

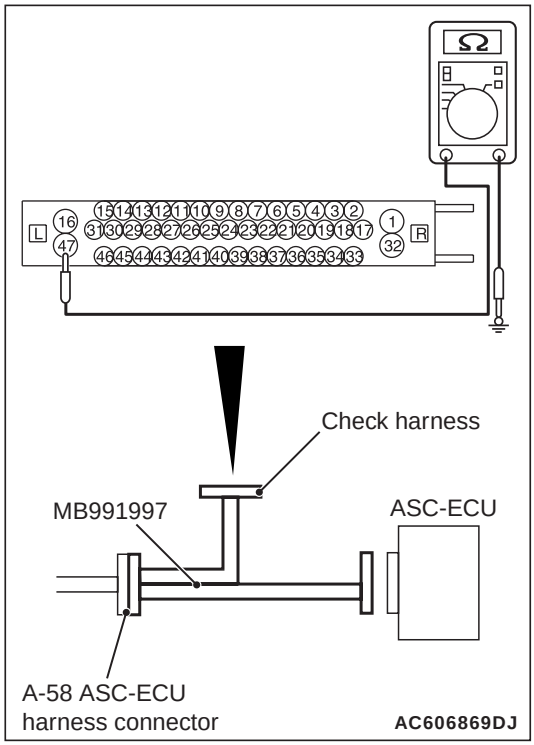

(1) Disconnect the ASC-ECU connector, connect special tool ASC check harness (MB991997) to the harness-side connector, and then measure the resistance at the special tool connector side.

NOTE: Do not connect the special tool ASC check harness (MB991997) to ASC-ECU.

(2) Resistance between the terminal No.16 and the body earth, and between the terminal No.47 and the body earth.

OK: Continuity exists (2 Ω or less)

Q: Is the check result normal?

YES : Go to Step 9.

NO : Go to Step 8.

STEP 8. Connector check: A-58 ASC-ECU connector

Q: Is the check result normal?

YES : An open circuit may be present in the earth circuit. Repair the wiring harness between the A-58 ASC-ECU connector terminal No.16 and the body earth, and between the A-58 ASC-ECU connector terminal No.47 and the body earth.

NO : Repair the defective connector.

STEP 9. Check whether the diagnosis code is reset.

(1) Erase the diagnosis code.

www.cargeek.ir

www.CarGeek.ir

(2) Drive the vehicle at 20 km/h or higher.

NOTE: The ABS warning lamp does not turn OFF in some cases unless the vehicle runs at 20 km/h or higher.

Q: Is diagnosis code No. C1608 set?

YES : Replace the hydraulic unit (integrated with ASC-ECU) (Refer to P.35C-185). Then go to step 10.

NO : Go to step 11.

STEP 10. Check whether the diagnosis code is reset.

(1) Erase the diagnosis code.

(2) Drive the vehicle at 20 km/h or higher.

NOTE: The ABS warning lamp does not turn OFF in some cases unless the vehicle runs at 20 km/h or higher.

Q: Is diagnosis code No. C1608 set?

YES : Return to Step 1.

NO : Go to step 11.

STEP 11. Check the other diagnosis code.

(1) Erase the diagnosis code.

(2) Drive the vehicle at 20 km/h or higher.

NOTE: The ABS warning lamp does not turn OFF in some cases unless the vehicle runs at 20 km/h or higher.

Q: Is any diagnosis code set?

YES : Carry out the applicable troubleshooting for the diagnosis code (Refer to).

NO : The procedure is complete.

Code No. U0001 Bus-off

⚠ CAUTION

- **If there is any problem in the CAN bus lines, an incorrect diagnosis code may be set. Prior to this diagnosis, diagnose the CAN bus lines (Refer to GROUP 54C – CAN Bus Diagnostics Table).**
- **If diagnosis code U0001 is set in ASC-ECU, always diagnose the CAN bus line. If there is any fault in the CAN bus lines, an incorrect diagnosis code may be set. In this case, the set diagnosis code is not highly reliable.**
- **Before replacing the ECU, ensure that the communication circuit is normal.**
- **When the hydraulic unit (integrated with ASC-ECU) is replaced, always carry out the calibration of the steering wheel sensor, the G and yaw rate sensor and brake fluid pressure sensor (Refer to P.35C-182, P.35C-183 and P.35C-184).**

DIAGNOSIS CODE SET CONDITIONS

This diagnosis code is set when ASC-ECU has ceased the CAN communication (bus off).

COMMENTS ON TROUBLE SYMPTOM

Malfunction of wiring harness, connector (s), or ASC-ECU may be present.

PROBABLE CAUSES

- Wiring harness or connector failure of CAN bus line
- ASC-ECU malfunction
- Other ECU malfunction

DIAGNOSIS PROCEDURE

STEP 1. M.U.T.-III CAN bus diagnosis

Use M.U.T.-III to diagnose the CAN bus lines.

Q: Is the check result normal?

YES : Go to Step 2.

NO : Repair the CAN bus lines (Refer to GROUP 54C – CAN Bus Diagnostics Table). On completion, go to Step 3.

STEP 2. Check whether the diagnosis code is reset.

Erase the diagnosis code.

Q: Is diagnosis code No. U0001 set?

YES : Replace the hydraulic unit (integrated with ASC-ECU) (Refer to P.35C-185), and then go to Step 3.

NO : If the trouble symptom is resolved, an intermittent malfunction such as poorly engaged connector(s) or wiring harness is suspected (Refer to GROUP 00 – How to Use Troubleshooting/How to Cope with Intermittent Malfunctions).

www.cargeek.ir

www.CarGeek.ir

STEP 3. Check whether the diagnosis code is reset.
Erase the diagnosis code.

Q: Is diagnosis code No. U0001 set?
YES : Return to Step 1.
NO : This diagnosis is complete.

Code No.U0404: Abnormality in AS&G signal

⚠ CAUTION
- **If there is any problem in the CAN bus lines, an incorrect diagnosis code may be set. Prior to this diagnosis, diagnose the CAN bus lines (Refer to GROUP 54C – CAN Bus Diagnostics Table .).**
- **Whenever ECU is replaced, ensure that the CAN bus lines are normal.**
- **When the hydraulic unit (integrated with ASC-ECU) is replaced, always carry out the calibration of the steering wheel sensor, the G and yaw rate sensor and brake fluid pressure sensor.**

OPERATION
AS&G-ECU outputs the signal to ASC-ECU via the CAN bus lines.

DIAGNOSIS CODE SET CONDITION
This diagnosis code is set when abnormality in AS&G-ECU output value if any malfunction below is found:

PROBABLE CAUSES
- Wiring harness or connector failure of CAN bus line
- AS&G-ECU malfunction
- ASC-ECU malfunction

DIAGNOSIS PROCEDURE

STEP 1. M.U.T.-III CAN bus diagnostics
Use M.U.T.-III to diagnose the CAN bus lines.

Q: Is the check result normal?
YES : Go to Step 3.
NO : Repair the CAN bus lines (Refer to GROUP 54C – CAN Bus Diagnostics Table .). On completion, go to Step 2.

STEP 2. Diagnosis code recheck after resetting CAN bus lines

Q: Is diagnosis code No.U0404 set?
YES : Go to Step 3.
NO : This diagnosis is complete.

STEP 3. ETACS-ECU coding data check
Refer to GROUP 00 – Coding List .

Q: Is the check result normal?
YES : Go to Step 4.
NO : Replace the ETACS-ECU (Refer to GROUP 54A – ETACS-ECU .), and then go to Step 6.

STEP 4. M.U.T.-III other system diagnosis code
Use M.U.T.-III to check whether any diagnosis code related to vehicles information is set or not by the AS&G-ECU.

Q: Is the diagnosis code set?
YES : Troubleshoot for the relevant diagnosis code, and then go to Step 5.
NO : Go to Step 5.

STEP 5. Check whether the diagnosis code is reset.
Erase the diagnosis code.

Q: Is diagnosis code No.U0404 set?
YES : Replace the hydraulic unit (integrated with ASC-ECU) (Refer to P.35C-185.), and then go to Step 6.
NO : This diagnosis is complete.

STEP 6. Check whether the diagnosis code is reset.
Erase the diagnosis code.

Q: Is diagnosis code No.U0404 set?
YES : Return to Step 1.
NO : This diagnosis is complete.

www.cargeek.ir

www.CarGeek.ir

Code No. U0100 Engine time-out error
Code No. U0101 CVT or A/T time-out error
Code No. U0126 Steering wheel sensor time-out error
Code No. U0141 ETACS time-out error

⚠ CAUTION

- **If there is any problem in the CAN bus lines, an incorrect diagnosis code may be set. Prior to this diagnosis, diagnose the CAN bus lines (Refer to GROUP 54C – CAN Bus Diagnostics Table).**
- **If diagnosis codes U0100, U0101, U0126 and U0141 are set in ASC-ECU, always diagnose the CAN bus line. If there is any fault in the CAN bus lines, an incorrect diagnosis code may be set. In this case, the set diagnosis code is not highly reliable.**
- **Before replacing the ECU, ensure that the communication circuit is normal.**
- **When the steering wheel sensor is replaced, always carry out calibration to make ASC-ECU learn the neutral point (Refer to P.35C-183).**
- **When the hydraulic unit (integrated with ASC-ECU) is replaced, always carry out the calibration of the steering wheel sensor, the G and yaw rate sensor and brake fluid pressure sensor (Refer to P.35C-182, P.35C-183 and P.35C-184).**

DIAGNOSIS CODE SET CONDITIONS
This diagnosis code is set if ASC-ECU cannot receive the signal sent from other ECU for a certain period.

OPERATION
ASC-ECU communicates with the engine ECU, CVT or A/T, the steering wheel sensor or ETACS-ECU via the CAN bus lines.

PROBABLE CAUSES

Code No. U0100
- Wiring harness or connector failure of CAN bus line
- Engine ECU malfunction
- ASC-ECU malfunction
- Connector disconnected or improperly connected
- Stretched or broken wires

Code No. U0101
- Wiring harness or connector failure of CAN bus line
- CVT or A/T malfunction
- ASC-ECU malfunction
- Connector disconnected or improperly connected
- Stretched or broken wires

Code No. U0126
- Wiring harness or connector failure of CAN bus line
- Steering wheel sensor malfunction
- ASC-ECU malfunction
- Connector disconnected or improperly connected
- Stretched or broken wires

Code No. U0141
- Wiring harness or connector failure of CAN bus line
- Malfunction of ETACS-ECU
- ASC-ECU malfunction
- Connector disconnected or improperly connected
- Stretched or broken wires

DIAGNOSIS PROCEDURE

STEP 1. M.U.T.-III CAN bus diagnosis
Use M.U.T.-III to diagnose the CAN bus lines.

Q: Is the check result normal?
YES : Go to Step 2.
NO : Repair the CAN bus lines (Refer to GROUP 54C – CAN Bus Diagnostics Table). On completion, go to Step 4.

STEP 2. Check whether the diagnosis code is reset.

Q: Are Code No. U0100, U0101, U0126 or U0141 set?
YES : Go to Step 3.
NO : The procedure is complete.

STEP 3. M.U.T.-III other system diagnosis code
Use M.U.T.-III to check that other diagnosis code is set in the ECU corresponding to the relevant diagnosis.

Q: Is other diagnosis code set?
YES : Troubleshoot for the relevant diagnosis code.
NO : Go to Step 4.

www.cargeek.ir

www.CarGeek.ir

STEP 4. M.U.T.-III diagnosis code
Use M.U.T.-III to check if the same diagnosis code (time-out) is set in the other ECU (CAN-C).

Q: Is any diagnosis code set?
YES (Code No. U0100 is set) : Replace the engine ECU, and then go to Step 5.
YES (Code No. U0101 is set) : Replace the CVT or A/T, and then go to Step 5.
YES (Code No. U0126 is set) : Replace steering wheel sensor, and then go to Step 5.
YES (Code No. U0141 is set) : Replace the ETACS-ECU, and then go to Step 5.
NO (No diagnosis code is set.) : The procedure is complete.

STEP 5. Check whether the diagnosis code is reset.
Erase the diagnosis code.

Q: Are Code No. U0100, U0101, U0126 or U0141 set?
YES : Replace the hydraulic unit (integrated with ASC-ECU) (Refer to P.35C-185).
NO : The procedure is complete.

Code No. U1004 AS&G CAN time-out

⚠ CAUTION
- **If there is any problem in the CAN bus lines, an incorrect diagnosis code may be set. Prior to this diagnosis, diagnose the CAN bus lines (Refer to GROUP 54C – CAN Bus Diagnostics Table .).**
- **If diagnosis codes U1004 are set in ASC-ECU, always diagnose the CAN bus line. If there is any fault in the CAN bus lines, an incorrect diagnosis code may be set. In this case, the set diagnosis code is not highly reliable.**
- **Before replacing the ECU, ensure that the communication circuit is normal.**
- **When the hydraulic unit (integrated with ASC-ECU) is replaced, always carry out the calibration of the steering wheel sensor, the G and yaw rate sensor and brake fluid pressure sensor.**

OPERATION
ASC-ECU communicates with the AS&G-ECU via the CAN bus lines.

DIAGNOSIS CODE SET CONDITION
This diagnosis code is set if ASC-ECU cannot receive the signal sent from AS&G-ECU for a certain period.

PROBABLE CAUSES
- Wiring harness or connector failure of CAN bus line
- AS&G-ECU malfunction
- ASC-ECU malfunction

DIAGNOSIS PROCEDURE

STEP 1. M.U.T.-III CAN bus diagnosis
Use M.U.T.-III to diagnose the CAN bus lines.

Q: Is the check result normal?
YES : Go to Step 2.
NO : Repair the CAN bus lines (Refer to GROUP 54C – CAN Bus Diagnostics Table .). On completion, go to Step 2.

STEP 2. ETACS-ECU coding data check
Refer to GROUP 00 – Coding List .

Q: Is the check result normal?
YES : Go to Step 3.
NO : Replace the ETACS-ECU (Refer to GROUP 54A – ETACS-ECU .), and then go to Step 6.

STEP 3. M.U.T.-III other system diagnosis code
Use M.U.T.-III to check that other diagnosis code is set in the AS&G-ECU corresponding to the relevant diagnosis.

Q: Is other diagnosis code set?
YES : Troubleshoot for the relevant diagnosis code, and then go to Step 4.
NO : Go to Step 4.

STEP 4. M.U.T.-III diagnosis code
Use M.U.T.-III to check if the same diagnosis code (time-out) is set in the other ECU (CAN-C).

Q: Is any diagnosis code set?

www.cargeek.ir

www.CarGeek.ir

YES : Troubleshoot for the relevant diagnosis code, and then go to Step 5.
NO : Go to Step 5.

STEP 5. Check whether the diagnosis code is reset.
Erase the diagnosis code.

Q: Is Code No. U1004 set?

YES : Replace the hydraulic unit (integrated with ASC-ECU) (Refer to P.35C-185.), and then go to Step 6.
NO : Intermittent malfunction (Refer to GROUP 00 – How to Cope with Intermittent Malfunctions .).

STEP 6. Check whether the diagnosis code is reset.
Erase the diagnosis code.

Q: Is diagnosis code No.U1004 set?
YES : Return to Step 1.
NO : This diagnosis is complete.

Code No. U0125 G and yaw rate sensor message time-out error/message error

G and Yaw Rate Sensor Circuit

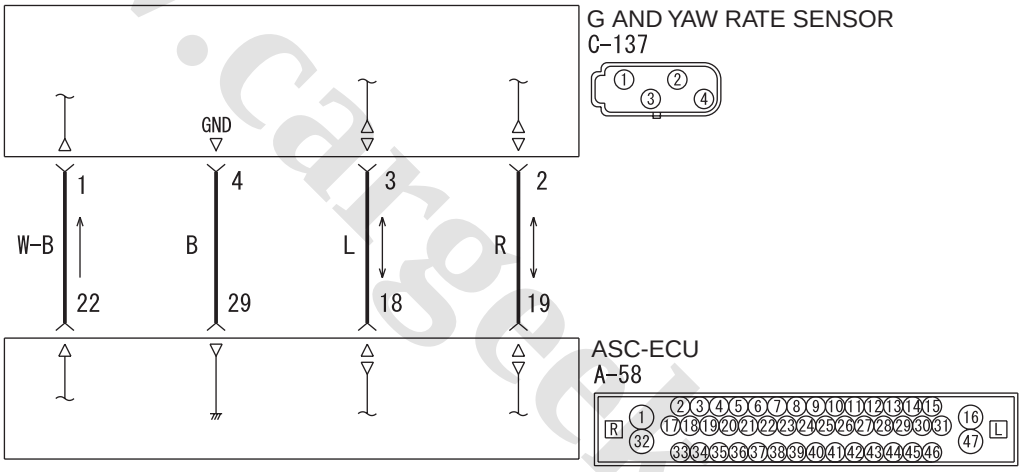

Wire colour code
B : Black LG : Light green G : Green L : Blue W : White Y : Yellow SB : Sky blue
BR : Brown O : Orange GR : Grey R : Red P : Pink V : Violet PU : Purple SI : Silver

ACB02567

Connector: A-58 <LHD>

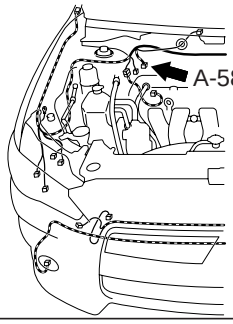

AC612691AO

Connector: A-58 <RHD>

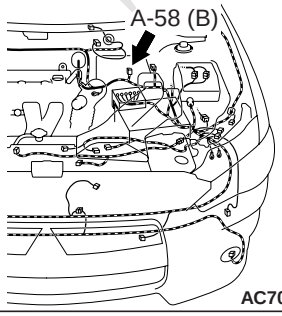

AC701238AF

www.cargeek.ir

www.CarGeek.ir

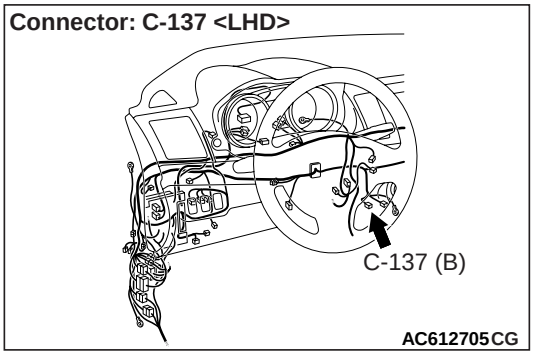

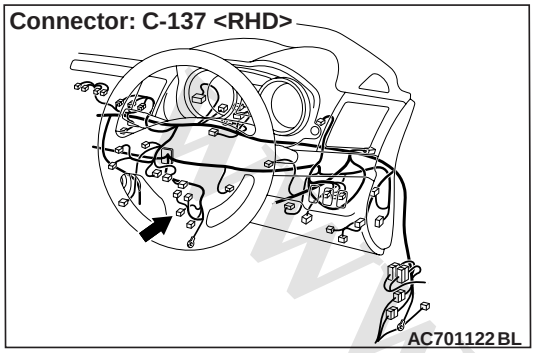

⚠ CAUTION

- **If there is any problem in the CAN bus lines, an incorrect diagnosis code may be set. Prior to this diagnosis, diagnose the CAN bus lines (Refer to GROUP 54C – CAN Bus Diagnostics Table).**
- **Whenever ECU is replaced, ensure that the CAN bus lines are normal.**
- **Do not drop or shock the G and yaw rate sensor.**
- **When the G and yaw rate sensor is replaced, always carry out calibration to make ASC-ECU learn the neutral point (Refer to P.35C-182).**
- **When the hydraulic unit (integrated with ASC-ECU) is replaced, always carry out the calibration of the steering wheel sensor, the G and yaw rate sensor and brake fluid pressure sensor (Refer to P.35C-182, P.35C-183 and P.35C-184).**

OPERATION

The G and yaw rate sensor outputs the signal to ASC-ECU via the special CAN bus lines.

DIAGNOSIS CODE SET CONDITIONS

This diagnosis code is set when the ASC-ECU cannot receive the signal from the G and yaw rate sensor although there is no abnormality in ASC-ECU supply voltage.

PROBABLE CAUSES

- Wiring harness or connector failure for the special CAN bus lines between ASC-ECU and the G and yaw rate sensor
- G and yaw rate sensor malfunction
- ASC-ECU malfunction
- External noise interference
- Connector disconnected or improperly connected
- Stretched or broken wires

DIAGNOSIS PROCEDURE

STEP 1. M.U.T.-III CAN bus diagnostics

Use M.U.T.-III to diagnose the CAN bus lines.

Q: Is the check result normal?

YES : Go to Step 3.

NO : Repair the CAN bus lines (Refer to GROUP 54C – CAN Bus Diagnostics Table). On completion, go to Step 2.

STEP 2. Diagnosis code recheck after resetting CAN bus lines

Q: Is diagnosis code No. U0125 set?

YES : Go to Step 3.

NO : This diagnosis is complete.

STEP 3. Connector check: A-58 ASC-ECU connector, C-137 G and yaw rate sensor connector

Q: Is the check result normal?

YES : Go to Step 4.

NO : Repair the connector, and then go to Step 7.

STEP 4. Wiring harness check between A-58 ASC-ECU connector terminal No. 18 and C-137 G and yaw rate sensor connector terminal No. 3 as well as between A-58 ASC-ECU connector terminal No. 19 and C-137 G and yaw rate sensor connector terminal No. 2

- Check the communication circuit for open and short circuit.

Q: Is the check result normal?

YES : Go to Step 5.

NO : Repair the wiring harness, and then go to Step 7.

STEP 5. Diagnosis code recheck

Erase the diagnosis code.

Q: Is diagnosis code No. U0125 set?

www.cargeek.ir

www.CarGeek.ir

YES : Replace the G and yaw rate sensor (Refer to P.35C-189). Then go to Step 6.
NO : Intermittent malfunction (Refer to GROUP 00 – How to Use Troubleshooting/How to Cope with Intermittent Malfunctions).

STEP 6. Diagnosis code recheck
Erase the diagnosis code.

Q: Is diagnosis code No. U0125 set?
YES : Replace the hydraulic unit (integrated with ASC-ECU). (Refer to P.35C-185). Then go to Step 7.
NO : This diagnosis is complete.

STEP 7. Diagnosis code recheck
Erase the diagnosis code.

Q: Is diagnosis code No. U0125 set?
YES : Return to Step 1.
NO : This diagnosis is complete.

Code No. U0401 Engine signal malfunction detected

⚠ CAUTION
- **If there is any problem in the CAN bus lines, an incorrect diagnosis code may be set. Prior to this diagnosis, diagnose the CAN bus lines (Refer to GROUP 54C – CAN Bus Diagnostics Table).**
- **If diagnosis code No.U0401 is set in ASC-ECU, always diagnose the CAN bus line. If there is any fault in the CAN bus lines, an incorrect diagnosis code may be set. In this case, the set diagnosis code is not highly reliable.**
- **Before replacing the ECU, ensure that the communication circuit is normal.**

OPERATION
Engine-related signals are sent or received to and from between ASC-ECU and engine ECU via CAN bus lines.

DIAGNOSIS CODE SET CONDITIONS
This diagnosis code is set when the engine ECU malfunction has been detected.

PROBABLE CAUSES
- Malfunction of engine system
- Malfunction of engine ECU
- Malfunction of ASC-ECU
- External noise interference

DIAGNOSIS PROCEDURE

STEP 1. M.U.T.-III CAN bus diagnosis
Use M.U.T.-III to diagnose the CAN bus lines.

Q: Is the check result normal?
YES : Go to Step 2.
NO : Repair the CAN bus lines (Refer to GROUP 54C – CAN Bus Diagnostics Table). On completion, go to Step 5.

STEP 2. M.U.T.-III diagnosis code
Use M.U.T.-III to check that any diagnosis code other than the code No.U0401 is set in ASC-ECU.

Q: Is the diagnosis code set?
YES : Troubleshoot the relevant diagnosis code, and then go to Step 5.
NO : Go to Step 3.

STEP 3. M.U.T.-III other system diagnosis code
Use M.U.T.-III to check that the diagnosis code is set by the engine ECU.

Q: Is the diagnosis code set?
YES : Troubleshoot the relevant diagnosis code, and then go to Step 5.
NO : Go to Step 4.

STEP 4. Check whether the diagnosis code is reset.
Erase the diagnosis code.

Q: Is diagnosis code No.U0401 set?
YES : Replace the hydraulic unit (integrated with ASC-ECU) (Refer to P.35C-185), and then go to Step 5.
NO : Intermittent malfunction (Refer to GROUP 00 – How to Use Troubleshooting/How to Cope with Intermittent Malfunctions).

STEP 5. Check whether the diagnosis code is reset.
Erase the diagnosis code.

Q: Is diagnosis code No.U0401 set?
YES : Return to Step 1.
NO : This diagnosis is complete.

www.cargeek.ir

www.CarGeek.ir

Code No. U0428 Communication error in steering wheel sensor

⚠ CAUTION

- **If there is any problem in the CAN bus lines, an incorrect diagnosis code may be set. Prior to this diagnosis, diagnose the CAN bus lines (Refer to GROUP 54C – CAN Bus Diagnostics Table).**
- **If diagnosis code U0428 is set in ASC-ECU, always diagnose the CAN bus line. If there is any fault in the CAN bus lines, an incorrect diagnosis code may be set. In this case, the set diagnosis code is not highly reliable.**
- **Before replacing the ECU, ensure that the communication circuit is normal.**
- **When the hydraulic unit (integrated with ASC-ECU) is replaced, always carry out the calibration of the steering wheel sensor, the G and yaw rate sensor and brake fluid pressure sensor (Refer to P.35C-182, P.35C-183 and P.35C-184).**

OPERATION

The steering wheel sensor outputs the steering wheel status to ASC-ECU via the CAN bus lines.

DIAGNOSIS CODE SET CONDITIONS

This diagnosis code is set when ASC-ECU has detected the communication error in the steering wheel sensor.

PROBABLE CAUSES

- Steering wheel sensor malfunction
- ASC-ECU malfunction
- External noise interference

DIAGNOSIS PROCEDURE

STEP 1. M.U.T.-III CAN bus diagnostics

Use M.U.T.-III to diagnose the CAN bus lines.

Q: Is the check result normal?

YES : Replace the steering wheel sensor (Refer to P.35C-190). Then go to Step 2.

NO : Repair the CAN bus lines (Refer to GROUP 54C – CAN Bus Diagnostics Table). On completion, go to Step 3.

STEP 2. Check whether the diagnosis code is reset.

Erase the diagnosis code.

Q: Is diagnosis code No.U0428 set?

YES : Replace the hydraulic unit (integrated with ASC-ECU) (Refer to P.35C-185).

NO : This diagnosis is complete.

STEP 3. Check whether the diagnosis code is reset.

Erase the diagnosis code.

Q: Is diagnosis code No.U0428 set?

YES : Return to Step 1.

NO : This diagnosis is complete.

www.cargeek.ir

www.CarGeek.ir

Code No. U1003 G and yaw rate sensor bus-off

G and Yaw Rate Sensor Circuit

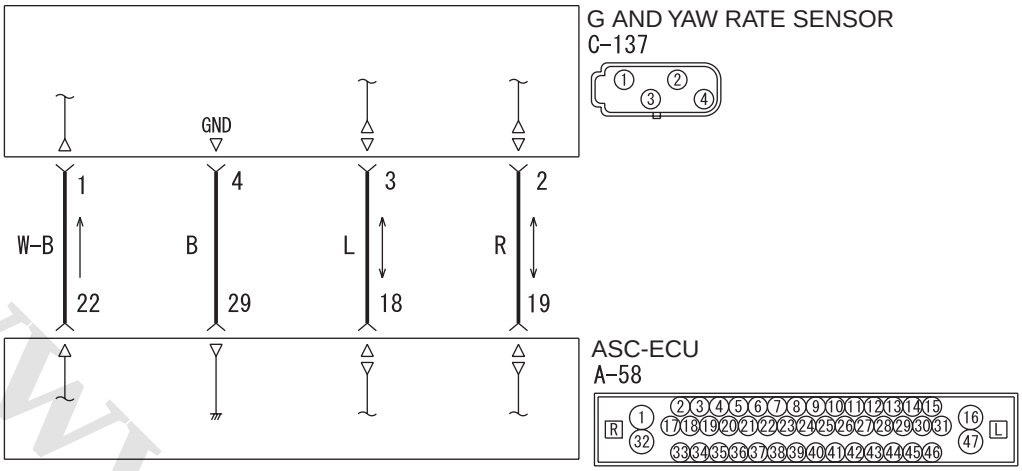

Wire colour code
B : Black LG : Light green G : Green L : Blue W : White Y : Yellow SB : Sky blue
BR : Brown O : Orange GR : Grey R : Red P : Pink V : Violet PU : Purple SI : Silver ACB02567

Connector: A-58 <LHD>

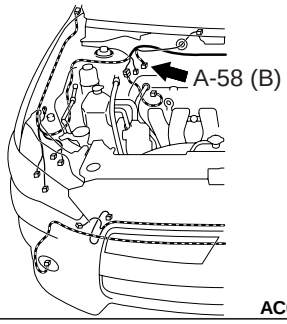

AC612691AO

Connector: C-137 <LHD>

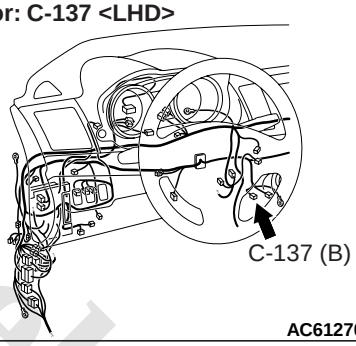

AC612705CG

Connector: A-58 <RHD>

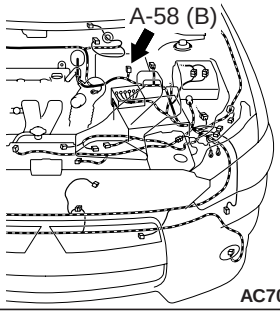

AC701238AF

Connector: C-137 <RHD>

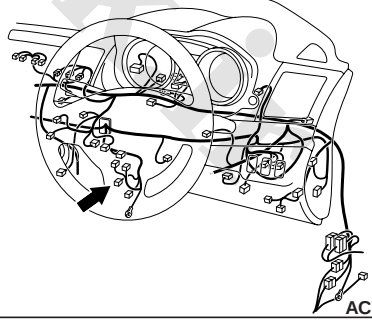

AC701122BL

www.cargeek.ir

www.CarGeek.ir

⚠ CAUTION

- **If there is any problem in the CAN bus lines, an incorrect diagnosis code may be set. Prior to this diagnosis, diagnose the CAN bus lines (Refer to GROUP 54C – CAN Bus Diagnostics Table).**
- **Whenever ECU is replaced, ensure that the CAN bus lines are normal.**
- **Do not drop or shock the G and yaw rate sensor.**
- **When the G and yaw rate sensor is replaced, always carry out calibration to make ASC-ECU learn the neutral point (Refer to P.35C-182).**
- **When the hydraulic unit (integrated with ASC-ECU) is replaced, always carry out the calibration of the steering wheel sensor, the G and yaw rate sensor and brake fluid pressure sensor (Refer to P.35C-182, P.35C-183 and P.35C-184).**

OPERATION

The G and yaw rate sensor outputs the signal to ASC-ECU via the special CAN bus lines.

DIAGNOSIS CODE SET CONDITIONS

This diagnosis code is set when the communication error occurs in the exclusive CAN bus communication between the ASC-ECU and the G and yaw rate sensor.

PROBABLE CAUSES

- Wiring harness or connector failure for the special CAN bus lines between ASC-ECU and the G and yaw rate sensor
- Malfunction of the G and yaw rate sensor
- ASC-ECU malfunction
- Connector disconnected or improperly connected
- Stretched or broken wires

DIAGNOSIS PROCEDURE

STEP 1. M.U.T.-III CAN bus diagnostics

Use M.U.T.-III to diagnose the CAN bus lines.

Q: Is the check result normal?

YES : Go to Step 3.
NO : Repair the CAN bus lines (Refer to GROUP 54C – CAN Bus Diagnostics Table). On completion, go to Step 2.

STEP 2. Diagnosis code recheck after resetting CAN bus lines

Q: Is diagnosis code No. U1003 set?

YES : Go to Step 3.
NO : This diagnosis is complete.

STEP 3. Connector check: A-58 ASC-ECU connector, C-137 G and yaw rate sensor connector

Q: Is the check result normal?

YES : Go to Step 4.
NO : Repair the connector, and then go to Step 7.

STEP 4. Wiring harness check between A-58 ASC-ECU connector terminal No. 18 and C-137 G and yaw rate sensor connector terminal No. 3 as well as between A-58 ASC-ECU connector terminal No. 19 and C-137 G and yaw rate sensor connector terminal No. 2

- Check the communication circuit for open and short circuit.

Q: Is the check result normal?

YES : Go to Step 5.
NO : Repair the wiring harness, and then go to Step 7.

STEP 5. Diagnosis code recheck

Q: Is diagnosis code No. U1003 set?

YES : Replace the G and yaw rate sensor (Refer to P.35C-189). Then go to Step 6.
NO : Intermittent malfunction (Refer to GROUP 00 – How to Use Troubleshooting/How to Cope with Intermittent Malfunctions).

STEP 6. Diagnosis code recheck

Erase the diagnosis code.

Q: Is diagnosis code No. U1003 set?

YES : Replace the hydraulic unit (integrated with ASC-ECU) (Refer to P.35C-185). Then go to Step 7.
NO : This diagnosis is complete.

STEP 7. Diagnosis code recheck

Erase the diagnosis code.

Q: Is diagnosis code No. U1003 set?

YES : Return to Step 1.
NO : This diagnosis is complete.

www.cargeek.ir

www.CarGeek.ir

Code No. U1415 Variant coding not implemented

⚠ CAUTION

- **If there is any problem in the CAN bus lines, an incorrect diagnosis code may be set. Prior to this diagnosis, diagnose the CAN bus lines (Refer to GROUP 54C – CAN Bus Diagnostics Table).**
- **Whenever ECU is replaced, ensure that the CAN bus lines are normal.**
- **When the diagnosis code No.U1415 is set in ASC-ECU, the diagnosis code may also be set in ETACS-ECU. When the diagnosis code is set in ETACS-ECU, carry out the diagnosis of the diagnosis code for ETACS-ECU first.**
- **When the hydraulic unit (integrated with ASC-ECU) is replaced, always carry out the calibration of the steering wheel sensor, the G and yaw rate sensor and brake fluid pressure sensor (Refer to P.35C-182, P.35C-183 and P.35C-184).**

OPERATION

ASC-ECU receives the vehicle information stored in the ETACS-ECU via CAN bus lines.

DIAGNOSIS CODE SET CONDITIONS

This diagnosis code is set when the variant coding for ETACS-ECU has not been implemented.

PROBABLE CAUSES

- Variant coding for ETACS-ECU has not been implemented.
- ASC-ECU malfunction

DIAGNOSIS PROCEDURE

STEP 1. M.U.T.-III CAN bus diagnosis

Use M.U.T.-III to diagnose the CAN bus lines.

Q: Is the check result normal?

YES : Go to Step 2.

NO : Repair the CAN bus lines (Refer to GROUP 54C – CAN Bus Diagnostics Table). On completion, go to Step 4.

STEP 2. M.U.T.-III other system diagnosis code

Use M.U.T.-III to check that the diagnosis code No.B222C is set in the ETACS-ECU.

Q: Is the diagnosis code set?

YES : Troubleshoot the relevant diagnosis code, and then go to Step 4.

NO : Go to Step 3.

STEP 3. Check whether the diagnosis code is reset.

(1) Erase the diagnosis code.
(2) Turn the ignition switch to the "OFF" position.
(3) Turn the ignition switch to the "ON" position.
(4) Check that the ABS warning lamp goes out.

NOTE: If the diagnosis code No.U1415 is not deleted, the ABS warning lamp keeps illuminating.

Q: Is the diagnosis code No.U1415 set?

YES : Replace the hydraulic unit (integrated with ASC-ECU) (Refer to P.35C-185), and then go to Step 4.

NO : Intermittent malfunction (Refer to GROUP 00 – How to Use Troubleshooting/How to Cope with Intermittent Malfunctions).

STEP 4. Check whether the diagnosis code is reset.

(1) Erase the diagnosis code.
(2) Turn the ignition switch to the "OFF" position.
(3) Turn the ignition switch to the "ON" position.
(4) Check that the ABS warning lamp goes out when the ignition switch is turned to the "ON" position.

NOTE: If the diagnosis code No.U1415 is not deleted, the ABS warning lamp keeps illuminating.

Q: Is the diagnosis code No.U1415 set?

YES : Return to Step 1.

NO : This diagnosis is complete.

www.cargeek.ir

www.CarGeek.ir

Code No. U1417 Variant coding value invalid (includes faulty installation)

⚠ CAUTION

- **If there is any problem in the CAN bus lines, an incorrect diagnosis code may be set. Prior to this diagnosis, diagnose the CAN bus lines (Refer to GROUP 54C – CAN Bus Diagnostics Table).**
- **If diagnosis code No.U1417 is set in ASC-ECU, always diagnose the CAN bus lines. If there is any fault in the CAN bus lines, an incorrect diagnosis code may be set. In this case, the set diagnosis code is not highly reliable.**
- **Before replacing the ECU, ensure that the communication circuit is normal.**
- **When diagnosis code No.U1417 is set in ASC-ECU, the diagnosis code may also be set in ETACS-ECU. When the diagnosis code is set in ETACS-ECU, carry out the diagnosis of the diagnosis code for ETACS-ECU first.**
- **When the hydraulic unit (integrated with ASC-ECU) is replaced, always carry out the calibration of the steering wheel sensor, the G and yaw rate sensor and brake fluid pressure sensor (Refer to P.35C-182, P.35C-183 and P.35C-184).**

OPERATION

ASC-ECU receives the vehicle information stored in the ETACS-ECU via CAN bus lines.

DIAGNOSIS CODE SET CONDITIONS

ASC-ECU communicates with ETACS-ECU via CAN bus lines. This diagnosis code is set when the vehicle information received from the ETACS-ECU is invalid.

PROBABLE CAUSES

- Malfunction of ETACS-ECU
- Malfunction of engine ECU
- ETACS-ECUs have been interchanged between two vehicles.
- Malfunction of ASC-ECU
- External noise interference
- ASC-ECUs have been interchanged between two vehicles.

DIAGNOSIS PROCEDURE

STEP 1. M.U.T.-III CAN bus diagnosis

Use M.U.T.-III to diagnose the CAN bus lines.

Q: Is the check result normal?

YES : Go to Step 3.
NO : Repair the CAN bus lines (Refer to GROUP 54C – CAN Bus Diagnostics Table). On completion, go to Step 2.

STEP 2. Diagnosis code recheck after resetting CAN bus lines

Q: Is diagnosis code No.U1417 set?

YES : Go to Step 3.
NO : This diagnosis is complete.

STEP 3. M.U.T.-III other system diagnosis code

Use M.U.T.-III to check whether the any diagnosis code related to the vehicle information is set or not by ETACS-ECU or engine-ECU.

Q: Is the diagnosis code set?

YES : Troubleshoot for the relevant diagnosis code.
NO : Go to Step 4.

STEP 4. ETACS-ECU coding data check

Refer to GROUP 00 – Precautions before Service/ Coding List .

Q: Is the check result normal?

YES : Go to Step 5.
NO : Replace the ETACS-ECU (Refer to GROUP 54A – ETACS-ECU), and then go to Step 7.

STEP 5. Engine ECU coding data check

Refer to GROUP 00 – Precautions before Service/ Coding List .

Q: Is the check result normal?

YES : Go to Step 6.
NO : Replace the engine ECU (Refer to GROUP 13A – engine ECU <4A9>, GROUP 13B – engine ECU <4B1>, GROUP 13F – engine ECU <4J1> or GROUP 13C – engine ECU <4N1>), and then go to Step 7.

STEP 6. Check the part number of ETACS-ECU

Check the part number of ETACS-ECU.

Q: Is the check result normal?

YES : Go to Step 7.
NO : Replace the ETACS-ECU (Refer to GROUP 54A – ETACS-ECU), and then go to Step 7.

www.cargeek.ir

www.CarGeek.ir

STEP 7. Check the part number of ASC-ECU
Check the part number of ASC-ECU.

Q: Is the check result normal?
YES : Go to Step 8.
NO : Replace the hydraulic unit (integrated with ASC-ECU) (Refer to P.35C-185), and then go to Step 9.

STEP 8. Check whether the diagnosis code is reset.
Erase the diagnosis code.

Q: Is diagnosis code No.U1417 set?
YES : Replace the hydraulic unit (integrated with ASC-ECU) (Refer to P.35C-185), and then go to Step 9.
NO : The trouble can be an intermittent malfunction (Refer to GROUP 00 – How to Use Troubleshooting/How to Cope with Intermittent Malfunctions).

STEP 9. Check whether the diagnosis code is reset.
Erase the diagnosis code.

Q: Is diagnosis code No.U1417 set?
YES : Return to Step 1.
NO : This diagnosis is complete.

TROUBLE SYMPTOM CHART

M1355006900941

⚠ CAUTION

- **ABS may operate in the following conditions without hard braking: Low mu road surface, high-speed turn, and bumpy road surface. When asking the customers, confirm that they have/have not encountered ABS operation in corresponding conditions.**
- **During ABS operation, the brake pedal is pulled forward gradually, and the noise occurs at the same time. This is because the brake line pressure varies intermittently to prevent the wheel lock, and not a system malfunction.**

⚠ CAUTION

During diagnosis, a diagnosis code associated with other system may be set when the ignition switch is turned on with connector(s) disconnected. On completion, confirm all systems for diagnosis code(s). If diagnosis code(s) are set, erase them all.

Trouble symptom		Inspection procedure number	Reference page
M.U.T.-III cannot communicate with the ABS/ASC system.	M.U.T.-III cannot communicate with all systems.	–	Refer to GROUP 54C – Troubleshooting .
	M.U.T.-III cannot communicate only with ASC-ECU.	1	P.35C-142
ASC OFF display or lamp flashes at a rate of 2Hz.		2	P.35C-142
Brake warning lamp stays ON with the parking brake lever released (ABS warning lamp is OFF).		3	P.35C-144
ABS warning lamp does not illuminate when ignition switch is turned to the ON position (Engine stopped).		4	P.35C-147
Brake warning lamp does not illuminate when the ignition switch is turned to ON position (Engine stopped).		5	P.35C-149
ABS warning lamp stays ON after the engine is started.		6	P.35C-150
ASC warning display stays ON after the engine is started.		7	P.35C-151
ASC OFF display or lamp stays ON after the engine is started.		8	P.35C-152

www.cargeek.ir

www.CarGeek.ir

Trouble symptom	Inspection procedure number	Reference page
The stability control/TCL system cannot be disabled when ASC OFF switch is pressed for 3 seconds or more to turn the system OFF.	9	P.35C-155
Abnormality in brake operation	10	P.35C-157
Stability control/TCL does not work.	11	P.35C-158
ASC-ECU power supply circuit system	12	P.35C-159
Steering wheel sensor power supply circuit system	13	P.35C-167
ABS/stability control/TCL operates too frequently.	14	P.35C-169
ESS inoperative or improper operative.	15	P.35C-171
The initial check sound of hydraulic unit is loud.	16	P.35C-172

SYMPTOM PROCEDURES

Inspection Procedure 1: M.U.T.-III communication with ABS/ASC system is impossible.

⚠ CAUTION

- **If there is any problem in the CAN bus lines, an incorrect diagnosis code may be set. Prior to this diagnosis, diagnose the CAN bus lines (Refer to GROUP 54C – CAN Bus Diagnostics Table).**
- **Whenever ECU is replaced, ensure that the CAN bus lines are normal.**
- **If the power is supplied with the earth circuit of CAN communication device open circuited, an electric potential abnormality may occur to the CAN bus lines.**
- **When the hydraulic unit (integrated with ASC-ECU) is replaced, always carry out the calibration of the steering wheel sensor, the G and yaw rate sensor and brake fluid pressure sensor (Refer to P.35C-182, P.35C-183 and P.35C-184).**

COMMENTS ON TROUBLE SYMPTOM

When M.U.T.-III cannot communicate with the ABS/ASC system, the CAN bus lines, ASC-ECU power supply circuit system, earth, or ASC-ECU may be faulty.

PROBABLE CAUSES

- Damaged wiring harness and connectors
- ASC-ECU malfunction
- Wrong routing of M.U.T.-III harness
- Abnormality in battery or alternator
- Abnormality in power supply voltage to ASC-ECU
- ECU malfunction of other system

M.U.T.-III CAN bus diagnosis

Use M.U.T.-III to diagnose the CAN bus lines.

Q: Is the check result normal?

YES : Check the power supply circuit, and repair if necessary (Refer to P.35C-159).

NO : Repair the CAN bus lines (Refer to GROUP 54C – CAN Bus Diagnostics Table).

Inspection Procedure 2: ASC OFF display or lamp flashes at a rate of 2Hz.

OPERATION

When the ASC OFF display or lamp flashes at a rate of 2 Hz, the TCL control (brake control only) is prohibited.

www.cargeek.ir

www.CarGeek.ir

COMMENTS ON TROUBLE SYMPTOM

This operation is performed for the following reasons and is not a malfunction.

- ASC-ECU calculates the estimated temperature of the brake pad. In general, as the brake pad temperature increases, the coefficient of friction for the brake pad becomes smaller, resulting in the reduced braking force. When the estimated temperature of the brake pad reaches the specified value or more, ASC-ECU flashes the ASC OFF display or lamp at a rate of 2 Hz to warn the driver that the brake controllability by TCL is decreased by the reduced braking force. Consequently, ASC-ECU prohibits the TCL control (brake control only) until it determines that the estimated temperature of the brake pad is normal.

PROBABLE CAUSES

- Overheat of brake pad

www.cargeek.ir

www.cargeek.ir

www.CarGeek.ir

Inspection Procedure 3: Brake warning lamp stays ON with the parking brake lever released (ABS warning lamp is OFF).

Brake Warning Lamp Circuit

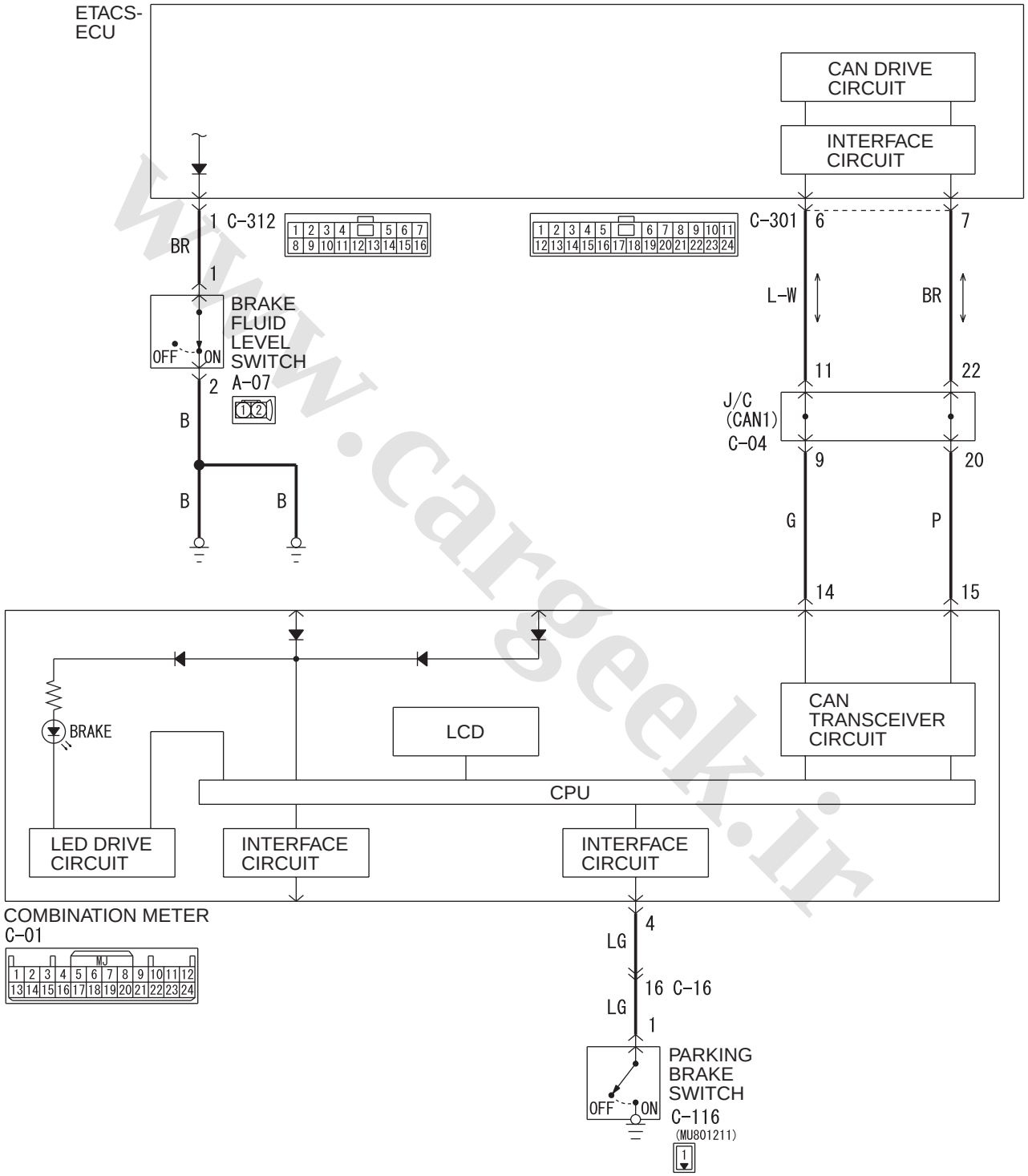

Wire colour code
B : Black LG : Light green G : Green L : Blue W : White Y : Yellow SB : Sky blue
BR : Brown O : Orange GR : Grey R : Red P : Pink V : Violet PU : Purple SI : Silver

ACB02564

www.cargeek.ir

www.CarGeek.ir

Connector: C-01 <LHD>

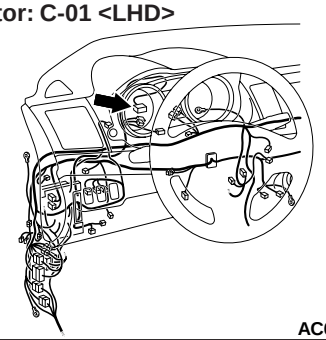

AC612705BK

Connectors: C-01, C-16 <RHD>

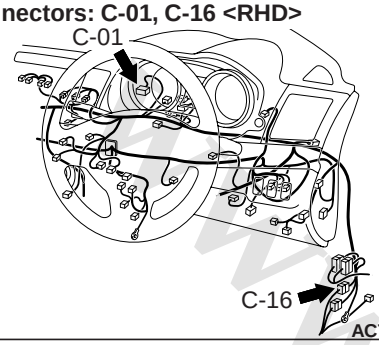

AC701122BN

Connector: C-16 <LHD>

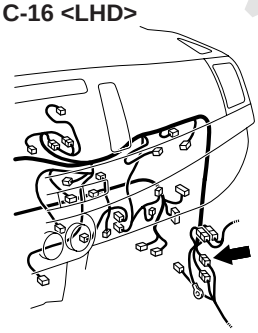

AC612706AO

Connector: C-116 <LHD>

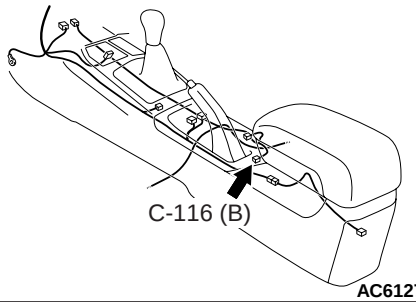

AC612707AH

Connector: C-116 <RHD>

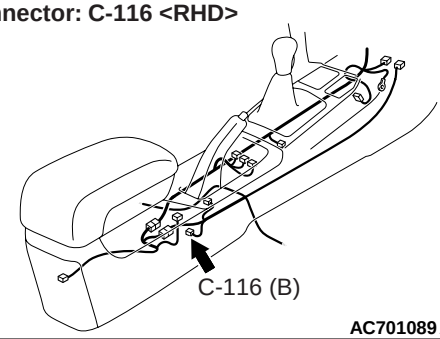

AC701089AF

⚠ CAUTION

- **If there is any problem in the CAN bus lines, an incorrect diagnosis code may be set. Prior to this diagnosis, diagnose the CAN bus lines (Refer to GROUP 54C – CAN Bus Diagnostics Table).**
- **Whenever ECU is replaced, ensure that the CAN bus lines are normal.**

OPERATION

- When the parking brake switch is turned ON, the combination meter terminal No.4 is earthed, and the brake warning lamp illuminates.
- When reduction of the brake fluid amount is detected, the brake fluid level switch is turned from ON to OFF. ETACS-ECU monitors the brake fluid level switch, and instructs the combination meter via the CAN bus line to illuminate the brake warning lamp.

PROBABLE CAUSES

- The brake pad thickness is at the limit value or less.
- The brake fluid amount is at the "LOWER" level or lower.
- Poor adjustment of the parking brake lever
- Damaged wiring harness and connectors
- Parking brake switch malfunction
- Malfunction of brake fluid level switch
- Combination meter malfunction
- Malfunction of ETACS-ECU

DIAGNOSIS PROCEDURE

STEP 1. M.U.T.-III CAN bus diagnosis

Use M.U.T.-III to diagnose the CAN bus lines.

Q: Is the check result normal?

YES : Go to Step 2.

NO : Repair the CAN bus lines (Refer to GROUP 54C – CAN Bus Diagnostics Table).

STEP 2. M.U.T.-III diagnosis code

Use M.U.T.-III to check that the diagnosis code is set in the combination meter and ETACS-ECU.

Q: Is the diagnosis code set?

YES : Carry out the diagnosis for the diagnosis code.

NO : Go to Step 3.

www.cargeek.ir

www.CarGeek.ir

STEP 3. Brake fluid level check
Check that the brake fluid is filled up to the "MIN" level or higher.

Q: Is the check result normal?
YES : Go to Step 5.
NO : Go to Step 4.

STEP 4. Brake pad check
Refer to GROUP 35A – On-vehicle Service, Brake Pad Check .

Q: Is the check result normal?
YES : Fill the brake fluid up to the "MAX" level. Then go to Step 17.
NO : Replace the brake pad (Refer to GROUP 35A – On-vehicle Service/Brake Pad Replacement <Except 4B11>, <4B11>). Then go to Step 17.

STEP 5. Brake fluid level switch check
Refer to GROUP 35A – On-vehicle Service/Brake Fluid Level Switch Check .

Q: Is the check result normal?
YES : Go to Step 6.
NO : Replace the reservoir tank assembly (Refer to GROUP 35A – Master Cylinder Assembly and Brake Booster Assembly <Except 4B11>, <4B11>). Then go to Step 17.

STEP 6. Connector check: A-07 brake fluid level switch connector, C-312 ETACS-ECU connector

Q: Is the check result normal?
YES : Go to Step 7.
NO : Repair the damaged connector.

STEP 7. Measure the voltage at A-07 brake fluid level switch connector.
(1) Disconnect the connector, and measure at the wiring harness side.
(2) Turn the ignition switch to the ON position.
(3) Measure the voltage between the terminal No. 1 and the body earth.

OK: Approximately system voltage

Q: Is the check result normal?
YES : Go to Step 9.
NO : Go to Step 8.

STEP 8. Measure the voltage at the C-312 ETACS-ECU connector.

⚠ CAUTION
With the C-312 ETACS-ECU connector kept connected, disconnect the A-07 brake fluid level switch connector.
(1) Turn the ignition switch to the ON position.
(2) Measure the voltage between terminal No. 1 and the body earth by backprobing.

OK: Approximately system voltage

Q: Is the check result normal?
YES : Check the wiring harness between the C-312 ETACS-ECU connector terminal No. 1 and the A-07 brake fluid level switch connector terminal No. 1.
NO : Replace the ETACS-ECU. (Refer to GROUP 54A – ETACS .) Then go to Step 17.

STEP 9. Wiring harness check: between A-07 brake fluid level switch connector and body earth
Check for open circuit in the harness wire between A-07 brake fluid level switch connector terminal No. 2 and body earth.

Q: Is the check result normal?
YES : Go to Step 10.
NO : Repair the wiring harness.

STEP 10. Parking brake lever stroke check
Refer to GROUP 36 – On-vehicle Service/Parking Brake Lever Stroke Check and Adjustment .

Q: Is the check result normal?
YES : Go to Step 11.
NO : Adjust the parking brake lever stroke. (Refer to GROUP 36 – On-vehicle Service/Parking Brake Lever Stroke Check and Adjustment .) Then go to Step 17.

STEP 11. Parking brake switch check
Refer to GROUP 36 – On-vehicle Service/Parking Brake Switch Check .

Q: Is the check result normal?
YES : Go to Step 12.
NO : Replace the parking brake switch. (Refer to GROUP 36 – Parking Brake Lever .) Then go to Step 17.

STEP 12. Connector check: C-116 parking brake switch connector

Q: Is the check result normal?

www.cargeek.ir

www.CarGeek.ir

YES : Go to Step 13.
NO : Repair the damaged connector.

STEP 13. Measure the voltage at C-116 parking brake switch connector.

(1) Disconnect the connector, and measure at the wiring harness side.
(2) Turn the ignition switch to the ON position.
(3) Measure the voltage between the terminal No. 1 and the body earth.

OK: Approximately system voltage

Q: Is the check result normal?
YES : Go to Step 16.
NO : Go to Step 14.

STEP 14. Connector check: C-01 combination meter connector, C-16 intermediate connector

Q: Is the check result normal?
YES : Go to Step 15.
NO : Repair the damaged connector.

STEP 15. check the wiring harness between the C-01 combination meter connector terminal No. 4 and the C-116 parking brake switch connector terminal No. 1.

- Check for short circuit.

Q: Is the check result normal?
YES : Go to Step 16
NO : Repair the wiring harness.

STEP 16. Retest the system.

Q: Does the brake warning lamp turn ON and OFF normally according to the parking brake lever operation?
YES : Intermittent malfunction (Refer to GROUP 00 – How to Use Troubleshooting/How to Cope with Intermittent Malfunctions .)
NO : Replace the combination meter assembly. (Refer to GROUP 54A – Combination Meter .) Then go to Step 17.

STEP 17. Retest the system.

Q: Does the brake warning lamp turn ON and OFF normally according to the parking brake lever operation?
YES : This diagnosis is complete.
NO : Return to Step 1.

Inspection Procedure 4: ABS warning lamp does not illuminate when ignition switch is turned to the ON position (engine stopped).

⚠ CAUTION

- **If there is any problem in the CAN bus lines, an incorrect diagnosis code may be set. Prior to this diagnosis, diagnose the CAN bus lines (Refer to GROUP 54C – CAN Bus Diagnostics Table).**
- **Before replacing the ECU, ensure that the communication circuit is normal.**
- **When the hydraulic unit (integrated with ASC-ECU) is replaced, always carry out the calibration of the steering wheel sensor, the G and yaw rate sensor and brake fluid pressure sensor (Refer to P.35C-182, P.35C-183 and P.35C-184).**

OPERATION

- ASC-ECU sends the illumination request signal of the ABS warning lamp to the combination meter through ETACS-ECU via CAN communication.
- ASC-ECU illuminates the ABS warning lamp via ETACS-ECU for approximately 3 seconds for valve check with the ignition switch turned to the ON position.

COMMENTS ON TROUBLE SYMPTOM

This may be caused by faults in the CAN bus line, ETACS-ECU, combination meter or ASC-ECU.

PROBABLE CAUSES

- Damaged wiring harness and connectors
- Malfunction of ETACS-ECU
- Combination meter malfunction
- ASC-ECU malfunction
- Malfunction of coding data for ETACS-ECU

www.cargeek.ir

www.CarGeek.ir

DIAGNOSIS PROCEDURE

STEP 1. M.U.T.-III CAN bus diagnostics
Use M.U.T.-III to diagnose the CAN bus lines.

Q: Is the check result normal?
YES : Go to Step 2.
NO : Repair the CAN bus lines. (Refer to GROUP 54C – CAN Bus Diagnostics Table .)

STEP 2. M.U.T.-III diagnosis code
Use M.U.T.-III to check the diagnosis code for the ASC system. (Refer to P.35C-16.)

Q: Is the diagnosis code set?
YES : Carry out the diagnosis for the diagnosis code. (Refer to P.35C-16.)
NO : Go to Step 3.

STEP 3. Actuator test
Perform the actuator test No. 07 of the combination meter system, and check if the ABS warning lamp illuminates (Refer to GROUP 54A – Combination Meter/Actuator Test Table).

Q: Is the check result normal?
YES : Go to Step 4.
NO : Diagnose the combination meter. (Refer to GROUP 54A – Combination Meter/Trouble Symptom Chart .) Then go to Step 8.

STEP 4. ETACS-ECU coding data check
Use M.U.T.-III to check if coding data stored in ETACS-ECU is normal. (Refer to GROUP 00 – Pre-cautions before Service/Coding List .)

Q: Is the check result normal?
YES : Go to Step 5.
NO : Replace the ETACS-ECU (Refer to GROUP 54A – ETACS-ECU), and then go to Step 8.

STEP 5. M.U.T.-III diagnosis code for other systems
Using M.U.T.-III, check that the diagnosis code No.U0141 is set by the combination meter system.

Q: Is the diagnosis code set?
YES : Diagnose the combination meter. (Refer to GROUP 54A – Combination Meter/ Troubleshooting .) Then go to Step 8.
NO : Go to Step 6.

STEP 6. M.U.T.-III diagnosis code for other systems
Using M.U.T.-III, check that the diagnosis code No.U0121 is set by the ETACS system.

Q: Is the diagnosis code set?
YES : Troubleshoot the ETACS-ECU (Refer to GROUP 54A – ETACS/Troubleshooting), and then go to Step 8.
NO : Go to Step 7.

STEP 7. Retest the system.

Q: Does the ABS warning lamp turn ON and OFF normally?
YES : Intermittent malfunction (Refer to GROUP 00 – How to Use Troubleshooting/How to Cope with Intermittent Malfunctions .)
NO : Replace the hydraulic unit (integrated with ASC-ECU) (Refer to P.35C-185), and then go to Step 8.

STEP 8. Retest the system.

Q: Does the ABS warning lamp turn ON and OFF normally?
YES : This diagnosis is complete.
NO : Return to Step 1.

www.cargeek.ir

www.CarGeek.ir

Inspection Procedure 5: Brake warning lamp does not illuminate when the ignition switch is turned to ON position (engine stopped).

⚠ CAUTION

- **If there is any problem in the CAN bus lines, an incorrect diagnosis code may be set. Prior to this diagnosis, diagnose the CAN bus lines (Refer to GROUP 54C – CAN Bus Diagnostics Table).**
- **Whenever ECU is replaced, ensure that the CAN bus lines are normal.**
- **When the hydraulic unit (integrated with ASC-ECU) is replaced, always carry out the calibration of the steering wheel sensor, the G and yaw rate sensor and brake fluid pressure sensor (Refer to P.35C-182, P.35C-183 and P.35C-184).**

OPERATION

- ASC-ECU sends the illumination request signal of the break warning lamp to the combination meter through ETACS-ECU via the CAN communication.
- ASC-ECU illuminates brake warning lamp via ETACS-ECU for approximately 3 seconds for bulb check with the ignition switch turned to the ON position.

COMMENTS ON TROUBLE SYMPTOM

This may be caused by faults in the CAN bus line, ETACS-ECU, combination meter or ASC-ECU.

PROBABLE CAUSES

- Damaged wiring harness and connectors
- Malfunction of ETACS-ECU
- Malfunction of the combination meter
- ASC-ECU malfunction

DIAGNOSIS PROCEDURE

STEP 1. M.U.T.-III CAN bus diagnostics

Use M.U.T.-III to diagnose the CAN bus lines.

Q: Is the check result normal?

YES : Go to Step 2.

NO : Repair the CAN bus lines. (Refer to GROUP 54C – CAN Bus Diagnostics Table .) Then go to Step 7.

STEP 2. M.U.T.-III diagnosis code

Use M.U.T.-III to check the diagnosis code for the ASC system.

Q: Is the diagnosis code set?

YES : Carry out the diagnosis for the diagnosis code (Refer to P.35C-16).

NO : Go to Step 3.

STEP 3. Actuator test of combination meter

Perform the following actuator test by the combination meter system, and check if the brake warning lamp illuminates (Refer to GROUP 54A – Combination Meter/Actuator Test Table).

- Item No.07: Indicator 1

Q: Is the check result normal?

YES : Go to Step 4.

NO : Diagnose the combination meter. (Refer to GROUP 54A – Combination Meter/Trouble Symptom Chart .) Then go to Step 7.

STEP 4. M.U.T.-III other system diagnosis code

Using M.U.T.-III, check that diagnosis code No.U0141 is set by the combination meter system.

Q: Is the diagnosis code set?

YES : Diagnose the combination meter (Refer to GROUP 54A – Combination Meter/ Diagnosis Code). Then go to Step 7.

NO : Go to Step 5.

STEP 5. M.U.T.-III other system diagnosis code

Using M.U.T.-III, check that diagnosis code No.U0121 is set by the ETACS system.

Q: Is the diagnosis code set?

YES : Perform troubleshooting on ETACS-ECU. (Refer to GROUP 54A – ETACS/Diagnosis Code .) Then go to Step 7.

NO : Go to Step 6.

STEP 6. Retest the system.

Q: Does the brake warning lamp turn ON and OFF

YES : Intermittent malfunction (Refer to GROUP 00 – How to Use Troubleshooting/How to Cope with Intermittent Malfunctions).

NO : Replace the hydraulic unit (integrated with ASC-ECU) (Refer to P.35C-185), and then go to Step 7.

STEP 7. Retest the system.

Q: Does the brake warning lamp turn ON and OFF normally?

www.cargeek.ir

www.CarGeek.ir

YES : This diagnosis is complete.
NO : Return to Step 1.

Inspection Procedure 6: ABS warning lamp stays ON after the engine is started.

⚠ CAUTION

- **If there is any problem in the CAN bus lines, an incorrect diagnosis code may be set. Prior to this diagnosis, diagnose the CAN bus lines (Refer to GROUP 54C – CAN Bus Diagnostics Table).**
- **Whenever ECU is replaced, ensure that the CAN bus lines are normal.**
- **When the hydraulic unit (integrated with ASC-ECU) is replaced, always carry out the calibration of the steering wheel sensor, the G and yaw rate sensor and brake fluid pressure sensor (Refer to P.35C-182, P.35C-183 and P.35C-184).**

OPERATION

- ASC-ECU sends the illumination request signal of the ABS warning lamp to the combination meter through ETACS-ECU via CAN communication.
- ASC-ECU illuminates the ABS warning lamp via ETACS-ECU for approximately 3 seconds for valve check with the ignition switch turned to the ON position.

COMMENTS ON TROUBLE SYMPTOM

This may be caused by faults in the CAN bus line, ETACS-ECU, combination meter or ASC-ECU.

PROBABLE CAUSES

- Damaged wiring harness and connectors
- Malfunction of ETACS-ECU
- Combination meter malfunction
- ASC-ECU malfunction
- Control stop due to the low voltage

NOTE: Due to the abnormality in the supply voltage, the diagnosis code may not be set even when the ABS warning lamp is illuminated.

DIAGNOSIS PROCEDURE

STEP 1. M.U.T.-III CAN bus diagnosis

Use M.U.T.-III to diagnose the CAN bus lines.

Q: Is the check result normal?

YES : Go to Step 2.
NO : Repair the CAN bus lines (Refer to GROUP 54C – CAN Bus Diagnostics Table). Then go to Step 7.

STEP 2. M.U.T.-III diagnosis code

Use M.U.T.-III to check the diagnosis code for the ASC system.

Q: Is the diagnosis code set?

YES : Carry out the diagnosis for the diagnosis code (Refer to P.35C-16).
NO : Go to Step 3.

STEP 3. Check the ASC-ECU power supply circuit system.

Refer to P.35C-159.

Q: Is the check result normal?

YES : Go to Step 4.
NO : Diagnose the power supply circuit of the ASC-ECU (Refer to P.35C-159).

STEP 4. M.U.T.-III other system diagnosis code

Using M.U.T.-III, check that diagnosis code No.U0141 is set by the combination meter system.

Q: Is the diagnosis code set?

YES : Diagnose the combination meter (Refer to GROUP 54A – Combination Meter/ Diagnosis Code). Then go to Step 7.
NO : Go to Step 5.

STEP 5. M.U.T.-III other system diagnosis code

Using M.U.T.-III, check that diagnosis code No.U0121 is set by the ETACS system.

Q: Is the diagnosis code set?

YES : Perform troubleshooting on ETACS-ECU (Refer to GROUP 54A – ETACS/Diagnosis Code). Then go to Step 7.
NO : Go to Step 6.

STEP 6. Retest the system.

(1) Erase the diagnosis code.
(2) Drive the vehicle at 10 km/h or higher.

Q: Does the ABS warning lamp turn ON and OFF normally?

www.cargeek.ir

www.CarGeek.ir

YES : Intermittent malfunction (Refer to GROUP 00 – How to Use Troubleshooting/How to Cope with Intermittent Malfunctions .)
NO : Replace the hydraulic unit (integrated with ASC-ECU) (Refer to P.35C-185), and then go to Step 7.

STEP 7. Retest the system.
(1) Erase the diagnosis code.
(2) Drive the vehicle at 10 km/h or higher.

Q: Does the ABS warning lamp turn ON and OFF normally?
YES : This diagnosis is complete.
NO : Return to Step 1.

Inspection Procedure 7: ASC warning display stays ON after the engine is started.

⚠ CAUTION
- **If there is any problem in the CAN bus lines, an incorrect diagnosis code may be set. Prior to this diagnosis, diagnose the CAN bus lines (Refer to GROUP 54C – CAN Bus Diagnostics Table).**
- **Whenever ECU is replaced, ensure that the CAN bus lines are normal.**
- **When the hydraulic unit (integrated with ASC-ECU) is replaced, always carry out the calibration of the steering wheel sensor, the G and yaw rate sensor and brake fluid pressure sensor (Refer to P.35C-182, P.35C-183 and P.35C-184).**

OPERATION
ASC-ECU sends the illumination request signal of the ASC warning display to the combination meter through ETACS-ECU via the CAN communication.

COMMENTS ON TROUBLE SYMPTOM
This may be caused by faults in the CAN bus line, ETACS-ECU, combination meter or ASC-ECU.

PROBABLE CAUSES
- Damaged wiring harness and connectors
- Malfunction of ETACS-ECU
- Combination meter malfunction
- ASC-ECU malfunction
- Control is disabled due to the low voltage

NOTE: Due to the abnormality in the supply voltage, the diagnosis code may not be set even when the ASC warning display illuminates.

DIAGNOSIS PROCEDURE

STEP 1. M.U.T.-III CAN bus diagnosis
Use M.U.T.-III to diagnose the CAN bus lines.

Q: Is the check result normal?
YES : Go to Step 2.
NO : Repair the CAN bus lines (Refer to GROUP 54C – CAN Bus Diagnostics Table). Then go to Step 7.

STEP 2. M.U.T.-III diagnosis code
Use M.U.T.-III to check the diagnosis code for the ASC system.

Q: Is the diagnosis code set?
YES : Carry out the diagnosis for the diagnosis code. (Refer to P.35C-16.)
NO : Go to Step 3.

STEP 3. Check the ASC-ECU power supply circuit system.
Refer to P.35C-159.

Q: Is the check result normal?
YES : Go to Step 4.
NO : Diagnose the power supply circuit of the ASC-ECU (Refer to P.35C-159).

STEP 4. M.U.T.-III other system diagnosis code
Using M.U.T.-III, check that diagnosis code No.U0141 is set by the combination meter system.

Q: Is the diagnosis code set?
YES : Diagnose the combination meter.(Refer to GROUP 54A – Combination Meter/ Diagnosis Code). Then go to Step 7.
NO : Go to Step 5.

STEP 5. M.U.T.-III other system diagnosis code
Using M.U.T.-III, check that diagnosis code No.U0121 is set by the ETACS system.

Q: Is the diagnosis code set?
YES : Perform troubleshooting on ETACS-ECU (Refer to GROUP 54A – ETACS/Diagnosis Code). Then go to Step 7.
NO : Go to Step 6.

www.cargeek.ir

www.CarGeek.ir

STEP 6. Retest the system.

Q: Does the ASC warning display turn ON and OFF normally?

YES : Intermittent malfunction (Refer to GROUP 00 – How to Use Troubleshooting/How to Cope with Intermittent Malfunctions .)

NO : Replace the hydraulic unit (integrated with ASC-ECU) (Refer to P.35C-185), and then go to Step 7.

STEP 7. Retest the system.

Q: Does the ASC warning display turn ON and OFF normally?

YES : This diagnosis is complete.

NO : Return to Step 1.

Inspection Procedure 8: ASC OFF display or ASC OFF lamp stays ON after the engine is started.

ASC OFF Switch Circuit

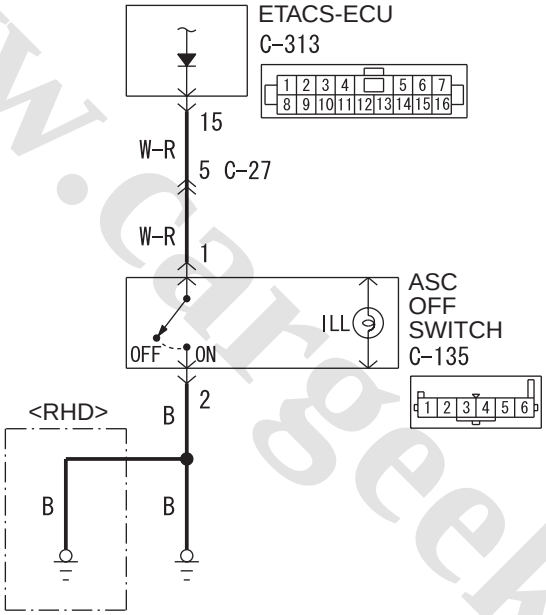

Wire colour code
B : Black LG : Light green G : Green L : Blue W : White Y : Yellow SB : Sky blue
BR : Brown O : Orange GR : Grey R : Red P : Pink V : Violet PU : Purple SI : Silver

ACB02569

Connectors: C-27, C-135 <LHD>

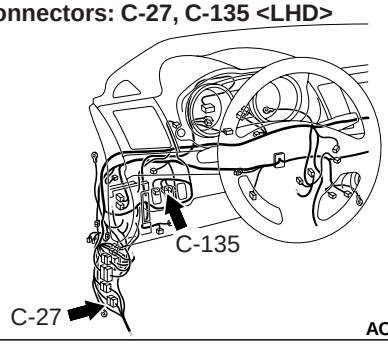

AC612705JA

Connector: C-27 <RHD>

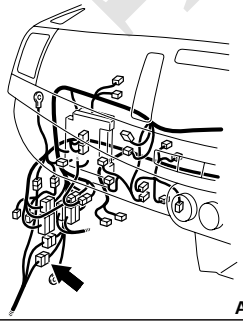

AC612710EW

www.cargeek.ir

www.CarGeek.ir

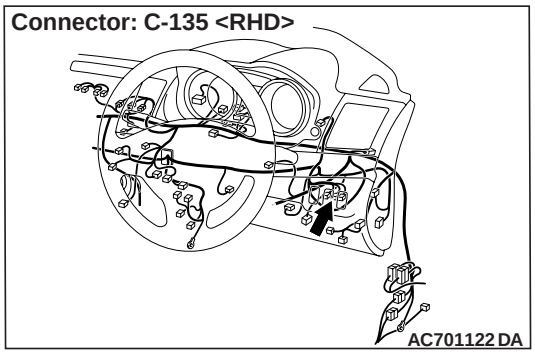

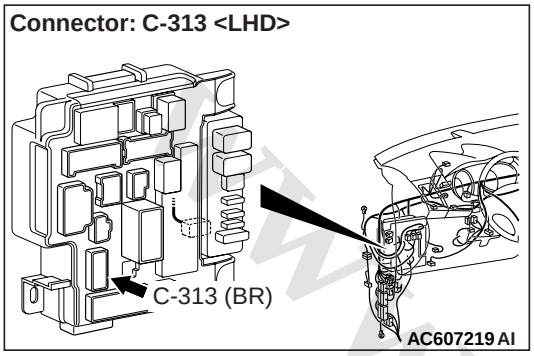

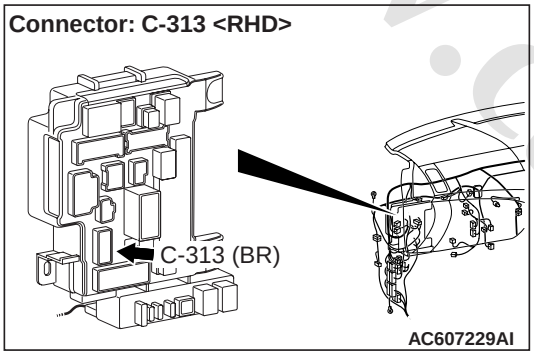

⚠ CAUTION

- **If there is any problem in the CAN bus lines, an incorrect diagnosis code may be set. Prior to this diagnosis, diagnose the CAN bus lines (Refer to GROUP 54C – CAN Bus Diagnostics Table).**
- **Whenever ECU is replaced, ensure that the CAN bus lines are normal.**
- **When the hydraulic unit (integrated with ASC-ECU) is replaced, always carry out the calibration of the steering wheel sensor, the G and yaw rate sensor and brake fluid pressure sensor (Refer to P.35C-182, P.35C-183 and P.35C-184).**

OPERATION

- ASC-ECU sends the illumination request signal of ASC OFF display to the combination meter through ETACS-ECU via CAN communication.
- By the operation of ASC OFF switch, the ASC OFF display illuminates when the ASC function is stopped.
- When the ASC OFF switch is pressed for 3 seconds or more, the ASC system turns OFF.
- When the ASC OFF switch is pressed for 15 seconds or more, the ASC is kept in ON state and the system cannot be turned OFF until the ignition switch is turned to the ON position next time.

COMMENTS ON TROUBLE SYMPTOM

This may be caused by faults in the CAN bus line, ETACS-ECU, combination meter or ASC-ECU.

PROBABLE CAUSES

- Damaged wiring harness and connectors
- Malfunction of ETACS-ECU
- Combination meter malfunction
- ASC-ECU malfunction

DIAGNOSIS PROCEDURE

STEP 1. M.U.T.-III CAN bus diagnostics

Use M.U.T.-III to diagnose the CAN bus lines.

Q: Is the check result normal?

YES : Go to Step 2.

NO : Repair the CAN bus lines (Refer to GROUP 54C – CAN Bus Diagnostics Table). Then go to Step 9.

STEP 2. M.U.T.-III diagnosis code

Use M.U.T.-III to check the diagnosis code for the ASC system.

Q: Is the diagnosis code set?

YES : Carry out the diagnosis for the diagnosis code chart (Refer to P.35C-16).

NO : Go to Step 3.

STEP 3. ASC OFF switch check

Refer to P.35C-185.

Q: Is the check result normal?

YES : Go to Step 4.

NO : Replace ASC OFF switch (Refer to P.35C-184). Then go to Step 9.

STEP 4. Connector check: C-313 ETACS-ECU connector, C-27 intermediate connector, C-135 ASC OFF switch connector

Q: Is the check result normal?

YES : Go to Step 5.

NO : Repair the damaged connector.

www.cargeek.ir

www.CarGeek.ir

STEP 5. Wiring harness check between C-313 ETACS-ECU connector terminal No. 15 and C-135 ASC OFF switch connector terminal No. 1

- Check the signal circuit for short circuit.

Q: Is the check result normal?

YES : Go to Step 6.

NO : Repair the wiring harness between C-313 ETACS-ECU connector terminal No. 15 and C-135 ASC OFF switch connector terminal No. 1.

STEP 6. M.U.T.-III diagnosis code for other systems

Using M.U.T.-III, check that diagnosis code No. U0141 is set by the combination meter system.

Q: Is the diagnosis code set?

YES : Diagnose the combination meter (Refer to GROUP 54A – Combination Meter/ Diagnosis Code). Then go to Step 9.

NO : Go to Step 7.

STEP 7. M.U.T.-III diagnosis code for other systems

Using M.U.T.-III, check that diagnosis code No. U0121 is set by the ETACS system.

Q: Is the diagnosis code set?

YES : Perform troubleshooting on ETACS-ECU (Refer to GROUP 54A – ETACS/Diagnosis Code). Then go to Step 8.

NO : Go to Step 8.

STEP 8. Retest the system.

Q: Does ASC OFF display turn ON and OFF normally?

YES : Intermittent malfunction (Refer to GROUP 00 – How to Use Troubleshooting/How to Cope with Intermittent Malfunctions .)

NO : Replace the hydraulic unit (integrated with ASC-ECU) (Refer to P.35C-185). Then go to Step 9.

STEP 9. Retest the system.

Q: Does ASC OFF display turn ON and OFF normally?

YES : This diagnosis is complete.

NO : Return to Step 1.

www.cargeek.ir

www.cargeek.ir

www.CarGeek.ir

Inspection Procedure 9: The stability control/traction control function cannot be disabled when ASC OFF switch is pressed for 3 seconds or more to turn the system OFF.

ASC OFF Switch Circuit

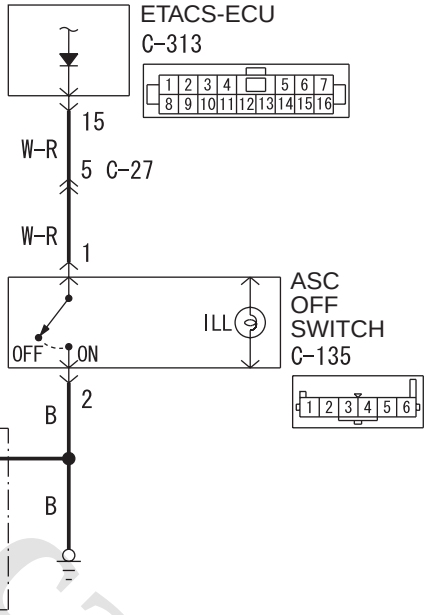

Wire colour code
B : Black LG : Light green G : Green L : Blue W : White Y : Yellow SB : Sky blue
BR : Brown O : Orange GR : Grey R : Red P : Pink V : Violet PU : Purple SI : Silver

ACB02569

Connectors: C-28, C-135 <LHD>

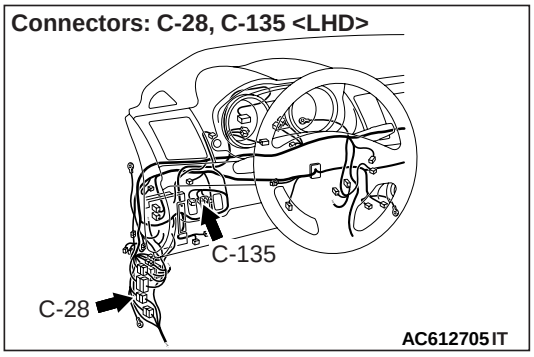

AC612705IT

Connector: C-135 <RHD>

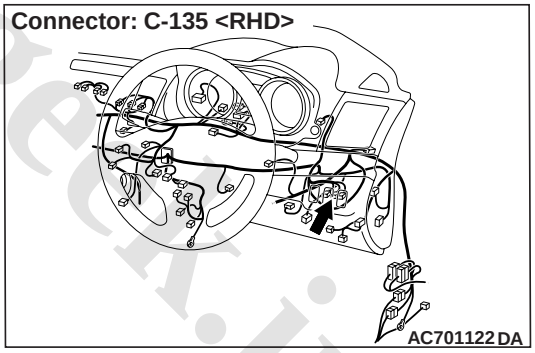

AC701122DA

Connector: C-28 <RHD>

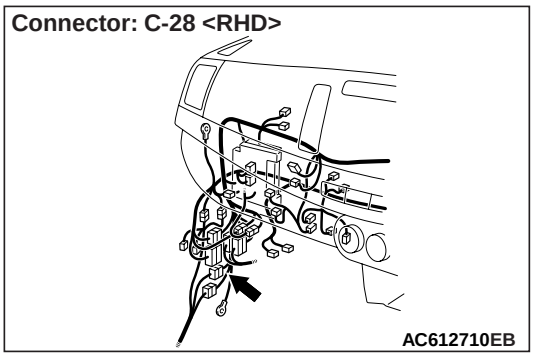

AC612710EB

Connector: C-313 <LHD>

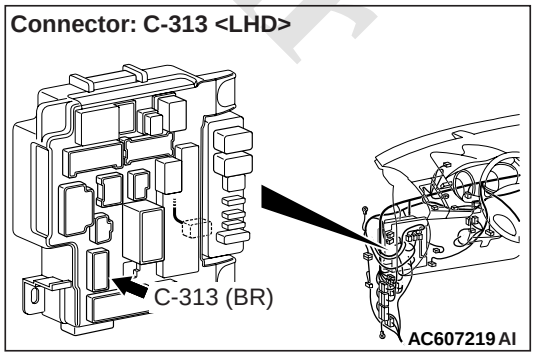

AC607219AI

www.cargeek.ir

www.CarGeek.ir

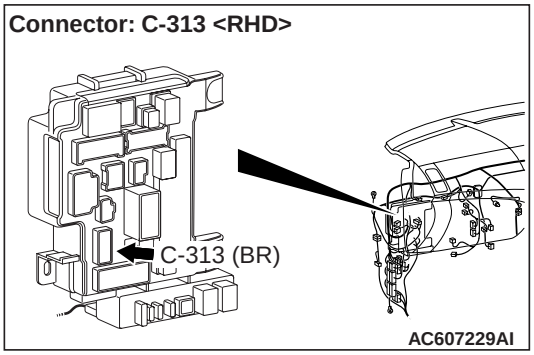

⚠ CAUTION

- **If there is any problem in the CAN bus lines, an incorrect diagnosis code may be set. Prior to this diagnosis, diagnose the CAN bus lines (Refer to GROUP 54C – CAN Bus Diagnostics Table).**
- **Whenever ECU is replaced, ensure that the CAN bus lines are normal.**

OPERATION

- ETACS-ECU terminal No. 15 is earthed by pressing ASC OFF switch. The ON/OFF state of ASC OFF switch is transferred from ETACS-ECU to ASC-ECU via CAN bus line.
- When the ASC OFF switch is pressed for 3 seconds or more, the ASC system turns OFF.
- When the ASC OFF switch is pressed and held for 15 seconds or more, ASC turns ON.

COMMENTS ON TROUBLE SYMPTOM

This may be caused by the open circuit or short circuit in the ASC OFF switch circuit.

PROBABLE CAUSES

- Damaged wiring harness and connectors
- ASC OFF switch malfunction
- Malfunction of ETACS-ECU

DIAGNOSIS PROCEDURE

STEP 1. ASC OFF switch check

Refer to P.35C-185.

Q: Is the check result normal?

YES : Go to Step 2.

NO : Replace ASC OFF switch (Refer to P.35C-184). Then go to Step 6.

STEP 2. Connector check: C-313 ETACS-ECU connector, C-27 intermediate connector, C-135 ASC OFF switch connector

Q: Is the check result normal?

YES : Go to Step 3.

NO : Repair the damaged connector.

STEP 3. Wiring harness check between C-313 ETACS-ECU connector terminal No. 15 and C-135 ASC OFF switch connector terminal No. 1

- Check the signal circuit for open and short circuit.

Q: Is the check result normal?

YES : Go to Step 4.

NO : Repair the wiring harness between C-313 ETACS-ECU connector terminal No. 15 and C-135 ASC OFF switch connector terminal No. 1.

STEP 4. Wiring harness check between C-135 ASC OFF switch connector terminal No. 2 and the body earth

- Check the earth wires for open circuit.

Q: Is the check result normal?

YES : Go to Step 5.

NO : Repair the wiring harness between C-135 ASC OFF switch connector terminal No. 2 and the body earth.

STEP 5. Retest the system.

Q: Does ASC turn ON and OFF normally using ASC OFF switch?

YES : Intermittent malfunction (Refer to GROUP 00 – How to Use Troubleshooting/How to Cope with Intermittent Malfunctions .)

NO : Replace the ETACS-ECU. (Refer to GROUP 54A – ETACS-ECU .) Then go to Step 6.

STEP 6. Retest the system.

Q: Does ASC turn ON and OFF normally using ASC OFF switch?

YES : This diagnosis is complete.

NO : Return to Step 1.

www.cargeek.ir

www.CarGeek.ir

Inspection Procedure 10: Abnormality in brake operation

⚠ CAUTION

- **If there is any problem in the CAN bus lines, an incorrect diagnosis code may be set. Prior to this diagnosis, diagnose the CAN bus lines (Refer to GROUP 54C – CAN Bus Diagnostics Table).**
- **Whenever ECU is replaced, ensure that the CAN bus lines are normal.**
- **When the hydraulic unit (integrated with ASC-ECU) is replaced, always carry out the calibration of the steering wheel sensor, the G and yaw rate sensor and brake fluid pressure sensor (Refer to P.35C-182, P.35C-183 and P.35C-184).**

COMMENTS ON TROUBLE SYMPTOM

Although the cause of the trouble cannot be clearly resolved since it depends on the running status and road surface condition, the malfunction of the hydraulic circuit may occur if any diagnosis code is not detected.

PROBABLE CAUSES

- Hydraulic unit (Integrated with ASC-ECU) malfunction
- Malfunction of hydraulic circuit
- Malfunction of brake assembly
- Malfunction of brake booster
- Malfunction of master cylinder assembly

DIAGNOSIS PROCEDURE

STEP 1. Diagnosis code check

Use M.U.T.-III to check the diagnosis code for the ASC system. (Refer to P.35C-16.)

Q: Is the check result normal?

YES : Go to Step 2.

NO : Troubleshoot for the relevant diagnosis code (Refer to P.35C-16).

STEP 2. Hydraulic unit (Integrated with ASC-ECU) check

Check that the brake tube is installed to the hydraulic unit (integrated with ASC-ECU) correctly (Refer to P.35C-179).

Q: Is the check result normal?

YES : Go to Step 3.

NO : Connect the brake tubes correctly, repair the external brake lines, or replace the hydraulic unit (integrated with ASC-ECU) (Refer to P.35C-185).

STEP 3. Brake operation check

Perform the following checks.

- Brake pedal check (Refer to GROUP 35A – On-vehicle Service/Brake Pedal Check and Adjustment .)
- Brake booster check (Refer to GROUP 35A – On-vehicle Service/Brake Booster Operating Check .)
- Check valve check (Refer to GROUP 35A – On-vehicle Service/Check Valve Operation Check .)

Q: Can any fault be found with the brake operation?

YES : Check the brake-related parts, and repair if necessary. Then, go to Step 4.

NO : Go to Step 4.

STEP 4. Hydraulic unit check

Perform the following actuator tests (Refer to P.35C-175).

- Item No.01: FL wheel ABS drive
- Item No.02: FR wheel ABS drive
- Item No.03: RL wheel ABS drive
- Item No.04: RR wheel ABS drive
- Item No.05: FL wheel TCL drive
- Item No.06: FR wheel TCL drive
- Item No.07: RL wheel TCL drive
- Item No.08: RR wheel TCL drive

Q: Is the check result normal?

YES : This diagnosis is complete.

NO : Replace the hydraulic unit (integrated with ASC-ECU) (Refer to P.35C-185).

www.cargeek.ir

www.CarGeek.ir

Inspection Procedure 11: ASC does not operate or faulty ASC operate.

⚠ CAUTION

- **If there is any problem in the CAN bus lines, an incorrect diagnosis code may be set. Prior to this diagnosis, diagnose the CAN bus lines (Refer to GROUP 54C – CAN Bus Diagnostics Table).**
- **Whenever ECU is replaced, ensure that the CAN bus lines are normal.**
- **When the hydraulic unit (integrated with ASC-ECU) is replaced, always carry out the calibration of the steering wheel sensor, the G and yaw rate sensor and brake fluid pressure sensor (Refer to P.35C-182, P.35C-183 and P.35C-184).**

COMMENTS ON TROUBLE SYMPTOM

In case of this trouble symptom, the stability control/TCL system operation may be disabled. Diagnosis code may be set by the stability control/TCL system using M.U.T.-III.

PROBABLE CAUSES

- Low battery output
- Wiring harness or connector failure of CAN bus line
- ASC-ECU malfunction
- Engine coding data problem

DIAGNOSIS PROCEDURE

STEP 1. Diagnosis code check

Use M.U.T.-III to check the diagnosis code for the ASC system. (Refer to P.35C-16.)

Q: Is the check result normal?

YES : Go to Step 2.

NO : Carry out the diagnosis for the diagnosis code. (Refer to P.35C-16.)

STEP 2. Engine ECU coding data check

Using M.U.T.-III, check if any abnormality is present to the coding data below which are stored in the engine-ECU (Refer to GROUP 00 – Precautions before Service/Coding List).

A.S.C.
OK: Available

Q: Is the check result normal?

YES : Go to Step 4.

NO : Go to Step 3.

STEP 3. Engine ECU coding data check

Perform the variant coding to the Engine ECU.

Q: Is the check result normal?

YES : Go to Step 5.

NO : Replace the engine ECU (Refer to GROUP 13A – Engine-ECU <4A9>, GROUP 13B – Engine-ECU <4B1>, GROUP 13F – Engine-ECU <4J1> or GROUP 13C – Engine-ECU <4N1>). Then go to Step 5.

STEP 4. Hydraulic unit (integrated with ASC-ECU) check

Check that the brake tube is correctly mounted to the hydraulic unit (integrated with ASC-ECU). (Refer to P.35C-179.)

Q: Is the check result normal?

YES : Replace the hydraulic unit (integrated with ASC-ECU).(Refer to P.35C-179.) Then go to Step 5.

NO : Connect the brake tubes correctly, and repair or replace the external brake lines of the hydraulic unit (integrated with ASC-ECU).

STEP 5. Operation check

Q: Does stability control/TCL operate normally?

YES : This diagnosis is complete.

NO : Check the brake system related components other than the stability control/TCL system.

www.cargeek.ir

www.CarGeek.ir

Inspection Procedure 12: ASC-ECU power supply circuit system

Solenoid Valve, Motor and ASC-ECU Power Source Circuit

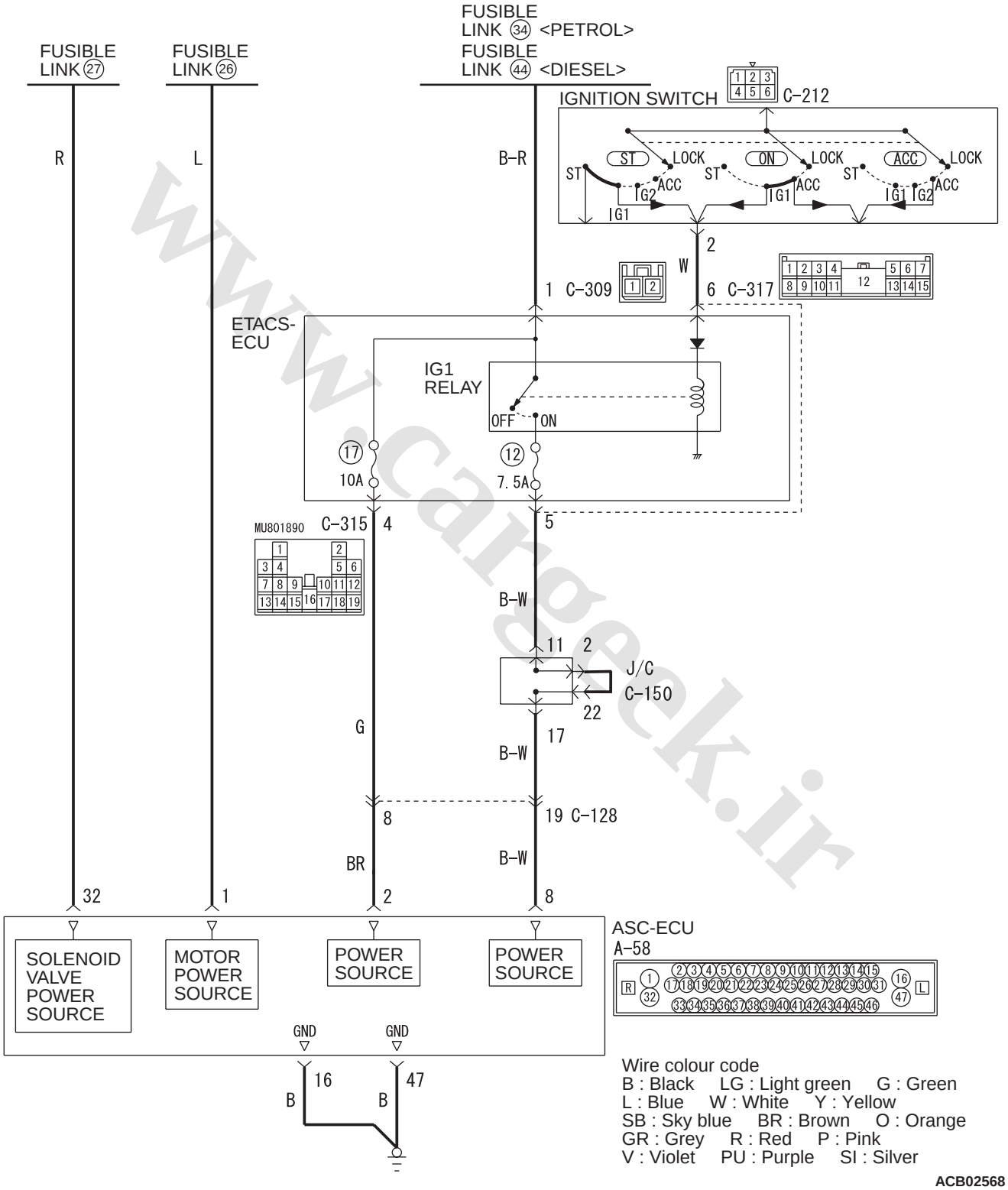

www.cargeek.ir

www.CarGeek.ir

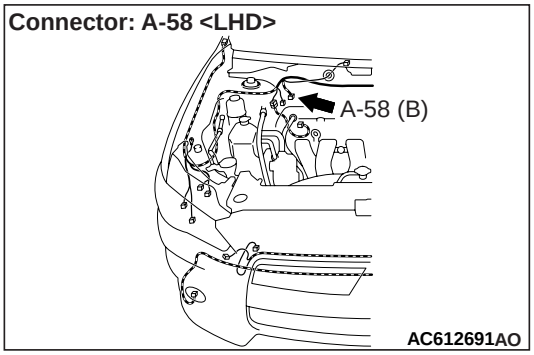

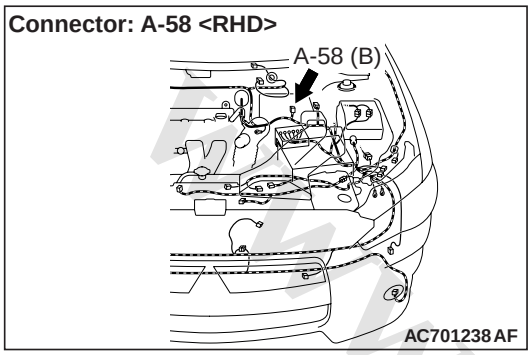

⚠ CAUTION

- **When the ASC-ECU power supply voltage becomes 9.7 ± 0.3 V or less, the ABS warning lamp, ASC warning display, and ASC OFF display illuminate, and the ABS, stability control, and TCL controls are prohibited.**
- **If the battery terminal is not tightened properly, a dump surge may occur and the power supply voltage may become abnormally high for a short time.**
- **If there is any problem in the CAN bus lines, an incorrect diagnosis code may be set. Prior to this diagnosis, diagnose the CAN bus lines (Refer to GROUP 54C – CAN Bus Diagnostics Table).**
- **Whenever ECU is replaced, ensure that the CAN bus lines are normal.**
- **When the hydraulic unit (integrated with ASC-ECU) is replaced, always carry out the calibration of the steering wheel sensor, the G and yaw rate sensor and brake fluid pressure sensor (Refer to P.35C-182, P.35C-183 and P.35C-184).**

OPERATION

- ASC-ECU contains the power supply circuit (terminal No.32) for the solenoid valve. The solenoid valve is energised by the valve relay, which is incorporated in ASC-ECU.
- ASC-ECU contains the power supply circuit (terminal No.2) for ASC-ECU. The power is supplied from the fusible link No.34 <PETROL> or fusible link No.44 <DIESEL> through the multi-purpose fuse No.17.
- ASC-ECU contains the power supply circuit (terminal No. 8) for ASC-ECU. When the ignition switch (IG1) is turned ON, the voltage is applied to the relay incorporated in ETACS-ECU to turn ON the relay, and the power is supplied from the fusible link No. 34 <PETROL> or fusible link No.44 <DIESEL> through multi-purpose fuse No. 12.
- ASC-ECU contains the power supply circuit (terminal No.1) for the pump motor. The pump motor is energised by the motor switch, which is incorporated in ASC-ECU.
- When malfunction occurs in ASC-ECU power supply, the communication with M.U.T.-III becomes unavailable.

PROBABLE CAUSES

- Damaged wiring harness and connectors
- Fuse and fusible link malfunction
- Improper tightening of battery terminal
- Improper tightening of earth bolt
- Battery failure
- Charging system failed
- ASC-ECU malfunction

DIAGNOSIS PROCEDURE

STEP 1. Battery check

Refer to GROUP 54A – Battery Test .

Q: Is the battery in good condition?

YES : Go to Step 3.

NO : Charge or replace the battery. Then go to Step 2.

STEP 2. Charging system check

Refer to GROUP 16 – On–vehicle Service/Alternator Output Line Voltage Drop Test .

Q: Is the charging system in good condition?

YES : Go to Step 3.

NO : Repair or replace the charging system component(s).

www.cargeek.ir

www.CarGeek.ir

STEP 3. Connector check: A-58 ASC-ECU connector, C-128 intermediate connector, C-212 ignition switch connector, C-309 ETACS-ECU connector, C-315 ETACS-ECU connector, C-317 ETACS-ECU connector

Q: Is the check result normal?
YES : Go to Step 4.
NO : Repair the damaged connector.

STEP 4. Fusible link check: Check the fusible link No.27.

Q: Is the check result normal?
YES : Go to Step 6.
NO : Go to Step 5.

STEP 5. Resistance measurement at A-58 ASC-ECU connector

(1) Removal the fusible link No.27.

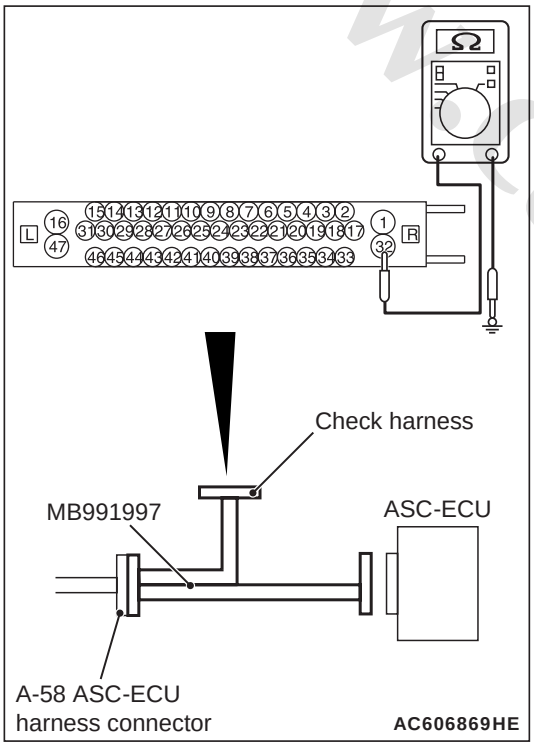

(2) Disconnect the ASC-ECU connector, connect special tool ASC check harness (MB991997) to the harness-side connector, and then measure the resistance at the special tool connector side.

NOTE: Do not connect the special tool ASC check harness (MB991997) to ASC-ECU.

(3) Measure the resistance between the terminal No.32 and the body earth.

OK: No continuity

Q: Is the check result normal?
YES : Replace the fusible link No.27. Then go to Step 24.
NO : The short circuit may be present in the power supply circuit. Repair the wiring harness between the A-58 ASC-ECU connector terminal No.32 and the fusible link No.27, and then replace the fusible link No.27. Then go to Step 24.

STEP 6. Voltage measurement at the A-58 ASC-ECU connector

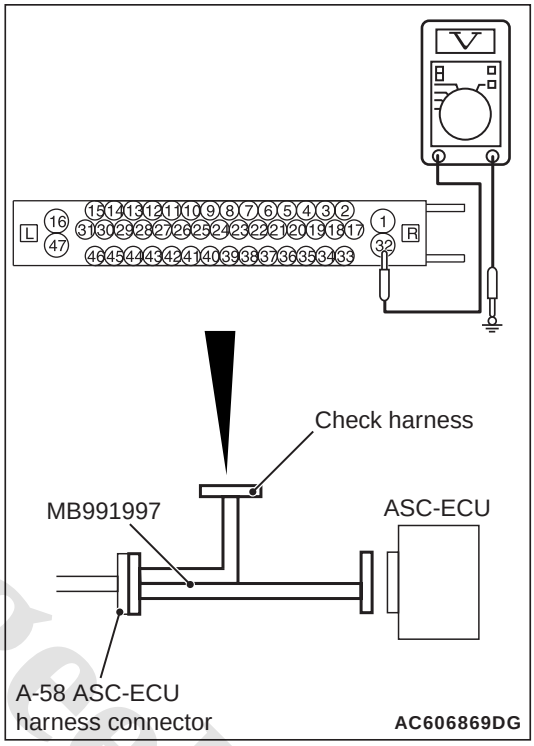

(1) Disconnect the ASC-ECU connector, connect special tool ASC check harness (MB991997) to the harness-side connector, and then measure the voltage at the special tool connector side.

NOTE: Do not connect the special tool ASC check harness (MB991997) to ASC-ECU.

(2) Measure the voltage between terminal No.32 and body earth.

OK: Approximately system voltage

Q: Is the check result normal?
YES : Go to Step 7.
NO : The open circuit may be present in the power supply circuit. Repair the wiring harness between the A-58 ASC-ECU connector terminal No.32 and the fusible link No.27. Then go to Step 24.

STEP 7. Check the fusible link No.26.

Q: Is the check result normal?

www.cargeek.ir

www.CarGeek.ir

YES : Go to Step 9.
NO : Go to Step 8.

STEP 8. Resistance measurement at A-58 ASC-ECU connector

(1) Removal the fusible link No.26.

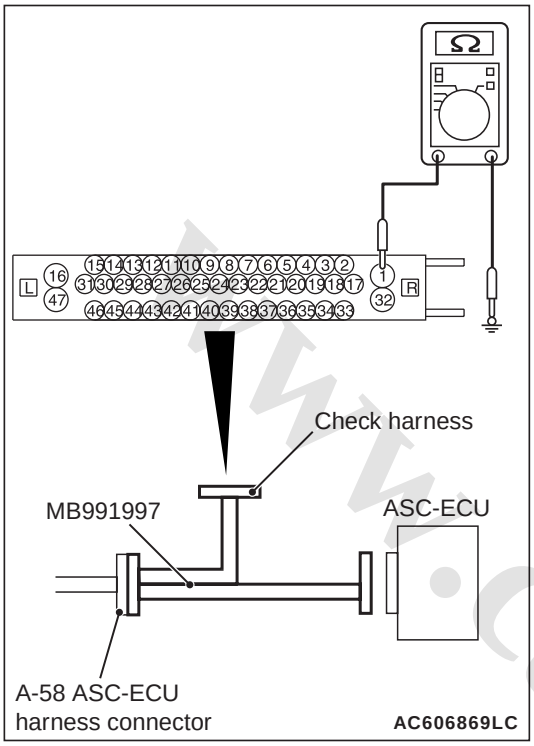

(2) Disconnect the ASC-ECU connector, connect special tool ASC check harness (MB991997) to the harness-side connector, and then measure the resistance at the special tool connector side.

NOTE: Do not connect the special tool ASC check harness (MB991997) to ASC-ECU.

(3) Measure the resistance between the terminal No.1 and the body earth.

OK: No continuity

Q: Is the check result normal?
YES : Replace the fusible link No.26. Then go to Step 24.
NO : The short circuit may be present in the power supply circuit. Repair the wiring harness between the A-58 ASC-ECU connector terminal No.1 and the fusible link No.26, and then replace the fusible link No.26. Then go to Step 24.

STEP 9. Voltage measurement at the A-58 ASC-ECU connector

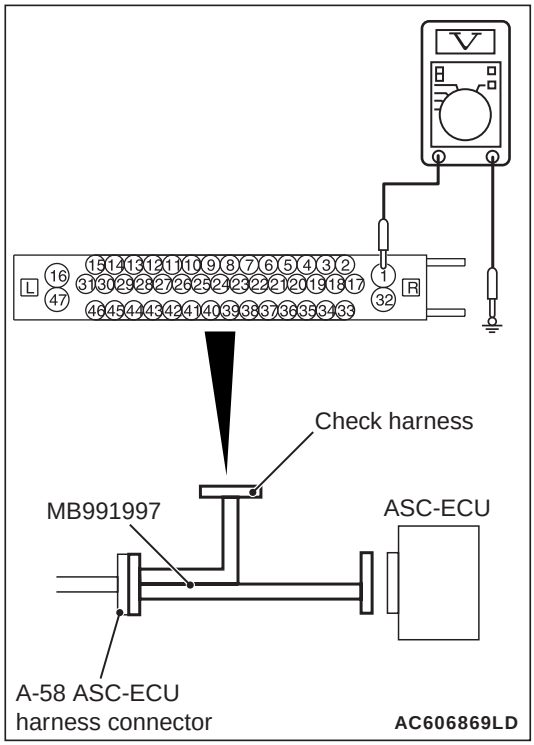

(1) Disconnect the ASC-ECU connector, connect special tool ASC check harness (MB991997) to the harness-side connector, and then measure the voltage at the special tool connector side.

NOTE: Do not connect the special tool ASC check harness (MB991997) to ASC-ECU.

(2) Measure the voltage between terminal No.1 and body earth.

OK: Approximately system voltage

Q: Is the check result normal?
YES : Go to Step 10.
NO : The open circuit may be present in the power supply circuit. Repair the wiring harness between the A-58 ASC-ECU connector terminal No.1 and the fusible link No.26. Then go to Step 24.

STEP 10. Check the fuse No.12.

Visually check for open circuit in fuse No.12.

Q: Is the check result normal?
YES : Go to Step 12.
NO : Go to Step 11.

www.cargeek.ir

www.CarGeek.ir

STEP 11. Resistance measurement at A-58 ASC-ECU connector

(1) Disconnect the C-317 ETACS-ECU connector.

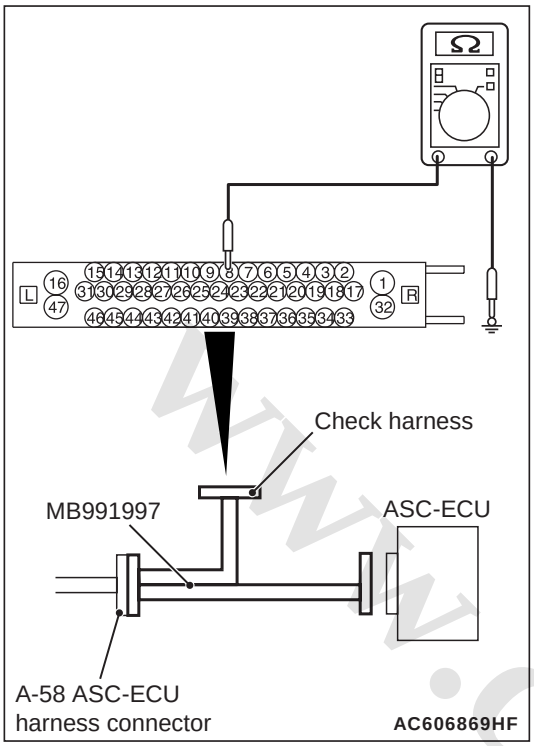

(2) Disconnect the ASC-ECU connector, connect special tool ASC check harness (MB991997) to the harness-side connector, and then measure the resistance at the special tool connector side.

NOTE: Do not connect the special tool ASC check harness (MB991997) to ASC-ECU.

(3) Measure the resistance between the terminal No.8 and the body earth.

OK: No continuity

Q: Is the check result normal?

YES : Replace the fuse No.12. Then go to Step 24.

NO : The short circuit may be present in the power supply circuit. Repair the wiring harness between the A-58 ASC-ECU connector terminal No.8 and the C-317 ETACS-ECU connector terminal No.5, and then replace the fuse No.12. Then go to Step 24.

STEP 12. Check the fuse No.17.

Visually check for open circuit in fuse No.17.

Q: Is the check result normal?

YES : Go to Step 14.

NO : Go to Step 13.

STEP 13. Resistance measurement at A-58 ASC-ECU connector

(1) Disconnect the C-315 ETACS-ECU connector.

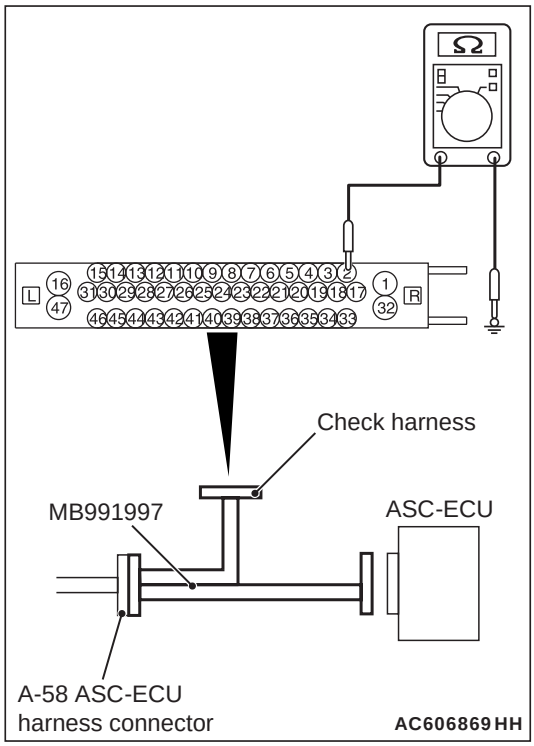

(2) Disconnect the ASC-ECU connector, connect special tool ASC check harness (MB991997) to the harness-side connector, and then measure the resistance at the special tool connector side.

NOTE: Do not connect the special tool ASC check harness (MB991997) to ASC-ECU.

(3) Measure the resistance between the terminal No.2 and the body earth.

OK: No continuity

Q: Is the check result normal?

YES : Replace the fuse No.17. Then go to Step 24.

NO : The short circuit may be present in the power supply circuit. Repair the wiring harness between the A-58 ASC-ECU connector terminal No.2 and the C-315 ETACS-ECU connector terminal No.4, and then replace the fuse No.17. Then go to Step 24.

STEP 14. Measure the voltage at the C-309 ETACS-ECU connector.

(1) Disconnect the connector, and measure at the wiring harness-side connector.

(2) Measure the voltage between the terminal No.1

www.cargeek.ir

www.CarGeek.ir

and the body earth.

OK: Approximately system voltage

Q: Is the check result normal?
YES : Go to Step 17.
NO : Go to Step 15.

STEP 15. Fusible link check: Check the fusible link No.34 <PETROL> or No.44 <DIESEL>.

Q: Is the check result normal?
YES : Go to Step 17.
NO : Go to Step 16.

STEP 16. Resistance measurement at C-309 ETACS-ECU connector

(1) Removal the fusible link No.34 <PETROL> or No.44 <DIESEL>.
(2) Disconnect the C-309 ETACS-ECU connector, and then measure the resistance at the connector side.
(3) Measure the resistance between the terminal No.1 and the body earth.

OK: No continuity

Q: Is the check result normal?
YES : Replace the fusible link No.34 <PETROL> or No.44 <DIESEL>. Then go to Step 24.
NO : The short circuit may be present in the power supply circuit. Repair the wiring harness between the C-309 ETACS-ECU connector terminal No.1 and the fusible link No.34 <PETROL> or No.44 <DIESEL>, and then replace the fusible link No.34 <PETROL> or No.44 <DIESEL>. Then go to Step 24.

STEP 17. Resistance measurement at fusible link No.34 <PETROL> or No.44 <DIESEL> and C-309 ETACS-ECU connector

(1) Disconnect the C-309 ETACS-ECU connector and fusible link No.34 <PETROL> or No.44 <DIESEL>, and then measure the resistance at the harness connector side.
(2) Measure the resistance between the fusible link No.34 <PETROL> or No.44 <DIESEL> and C-309 ETACS-ECU connector terminal No.1.

OK: Continuity exists (2 Ω or less)

Q: Is the check result normal?
YES : Go to Step 18.
NO : The open circuit may be present in the power supply circuit. Repair the wiring harness between the fusible link No.34 <PETROL> or No.44 <DIESEL> and C-309 ETACS-ECU connector terminal No.1. Then go to Step 24.

STEP 18. Resistance measurement at A-58 ASC-ECU connector

(1) Disconnect the C-317 ETACS-ECU connector.

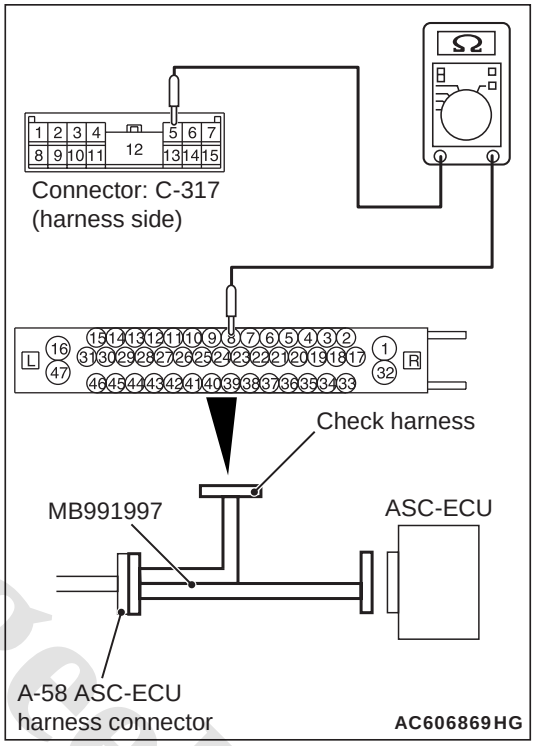

(2) Disconnect the A-58 ASC-ECU connector, connect special tool ASC check harness (MB991997) to the harness-side connector, and then measure the resistance at the special tool connector side.

NOTE: Do not connect the special tool ASC check harness (MB991997) to ASC-ECU.

(3) Measure the resistance between the A-58 ASC-ECU connector terminal No.8 and the C-317 ETACS-ECU connector terminal No.5.

OK: Continuity exists (2 Ω or less)

Q: Is the check result normal?
YES : Go to Step 19.
NO : The open circuit may be present in the power supply circuit. Repair the wiring harness between the A-58 ASC-ECU connector terminal No.8 and the C-317 ETACS-ECU connector terminal No.5. Then go to Step 24.

www.cargeek.ir

www.CarGeek.ir

STEP 19. Resistance measurement at A-58 ASC-ECU connector

(1) Disconnect the C-315 ETACS-ECU connector.

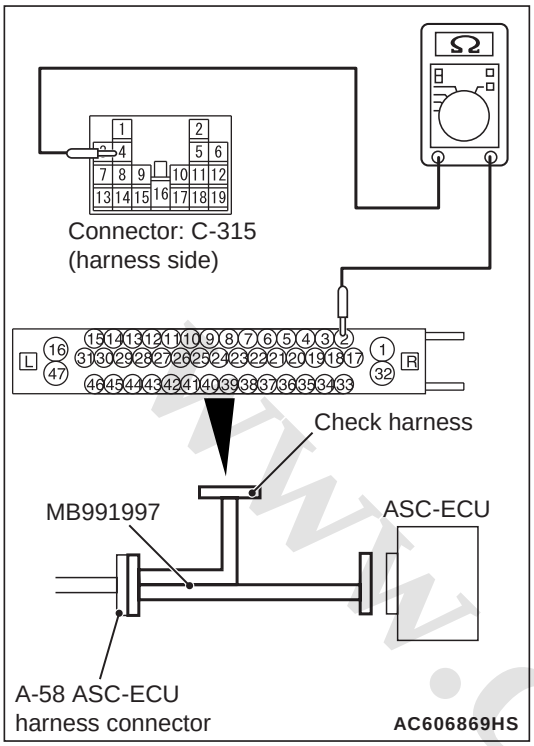

(2) Disconnect the A-58 ASC-ECU connector, connect special tool ASC check harness (MB991997) to the harness-side connector, and then measure the resistance at the special tool connector side.

NOTE: Do not connect the special tool ASC check harness (MB991997) to ASC-ECU.

(3) Measure the resistance between the A-58 ASC-ECU connector terminal No.2 and the C-315 ETACS-ECU connector terminal No.4.

OK: Continuity exists (2 Ω or less)

Q: Is the check result normal?

YES : Go to Step 20.

NO : The open circuit may be present in the power supply circuit. Repair the wiring harness between the A-58 ASC-ECU connector terminal No.2 and the C-315 ETACS-ECU connector terminal No.4. Then go to Step 24.

STEP 20. Measure the voltage at the C-317 ETACS-ECU connector.

(1) Measure by backprobing without disconnecting the connector.

(2) Turn the ignition switch to the ON position.

(3) Measure the voltage between the terminal No.6 and the body earth.

OK: Approximately battery voltage

Q: Is the check result normal?

YES : Go to Step 22.

NO : Go to Step 21.

STEP 21. Resistance measurement at C-317 ETACS-ECU connector and the C-212 ignition switch connector

(1) Disconnect the C-317 ETACS-ECU connector and C-212 ignition switch connector, and then measure the resistance at the harness connector side.

(2) Measure the resistance between the C-317 ETACS-ECU connector terminal No.6 and C-212 ignition switch connector terminal No.2.

OK: Continuity exists (2 Ω or less)

Q: Is the check result normal?

YES : Diagnose the ignition switch (Refer to).

NO : The open circuit may be present in the power supply circuit. Repair the wiring harness between the C-317 ETACS-ECU connector terminal No.6 and C-212 ignition switch connector terminal No.2. Then go to Step 24.

STEP 22. Resistance measurement at A-58 ASC-ECU connector

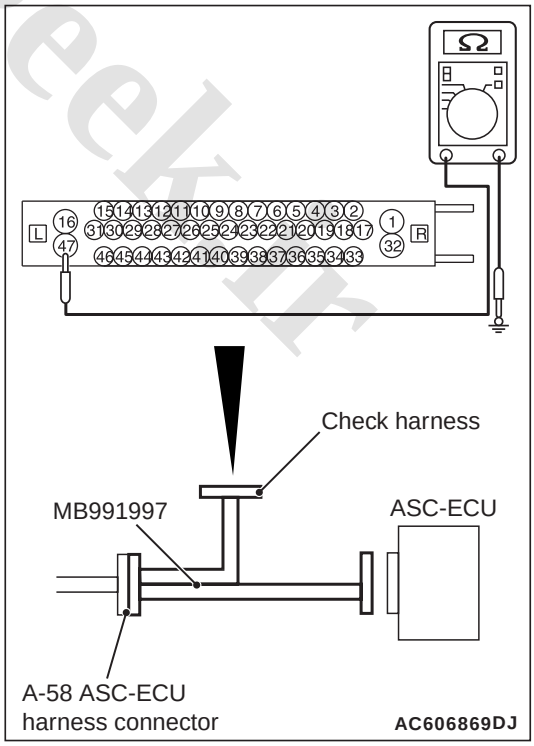

(1) Disconnect the ASC-ECU connector, connect special tool ASC check harness (MB991997) to

www.cargeek.ir

www.CarGeek.ir

the harness-side connector, and then measure the resistance at the special tool connector side.

NOTE: Do not connect the special tool ASC check harness (MB991997) to ASC-ECU.

(2) Measure the resistance between the terminal No.16 and the body earth, and between the terminal No.47 and the body earth.

OK: Continuity exists (2 Ω or less)

Q: Is the check result normal?

YES : Go to Step 23.

NO : An open circuit may be present in the earth circuit. Repair the wiring harness between the A-58 ASC-ECU connector terminal No.16 and the body earth, and between the A-58 ASC-ECU connector terminal No.47 and the body earth.

STEP 23. Retest the system.

Q: Is the communication with M.U.T.-III possible?

YES : Intermittent malfunction (Refer to GROUP 00 – How to Use Troubleshooting/How to Cope with Intermittent Malfunctions .)

NO : Replace the hydraulic unit (integrated with ASC-ECU) (Refer to P.35C-185). Then go to Step 24.

STEP 24. Retest the system.

Q: Is the communication with M.U.T.-III possible?

YES : This diagnosis is complete.

NO : Return to Step 1.

www.cargeek.ir

www.cargeek.ir

www.CarGeek.ir

Inspection Procedure 13: Steering wheel sensor power supply circuit system

Steering Wheel Sensor Power Source Circuit

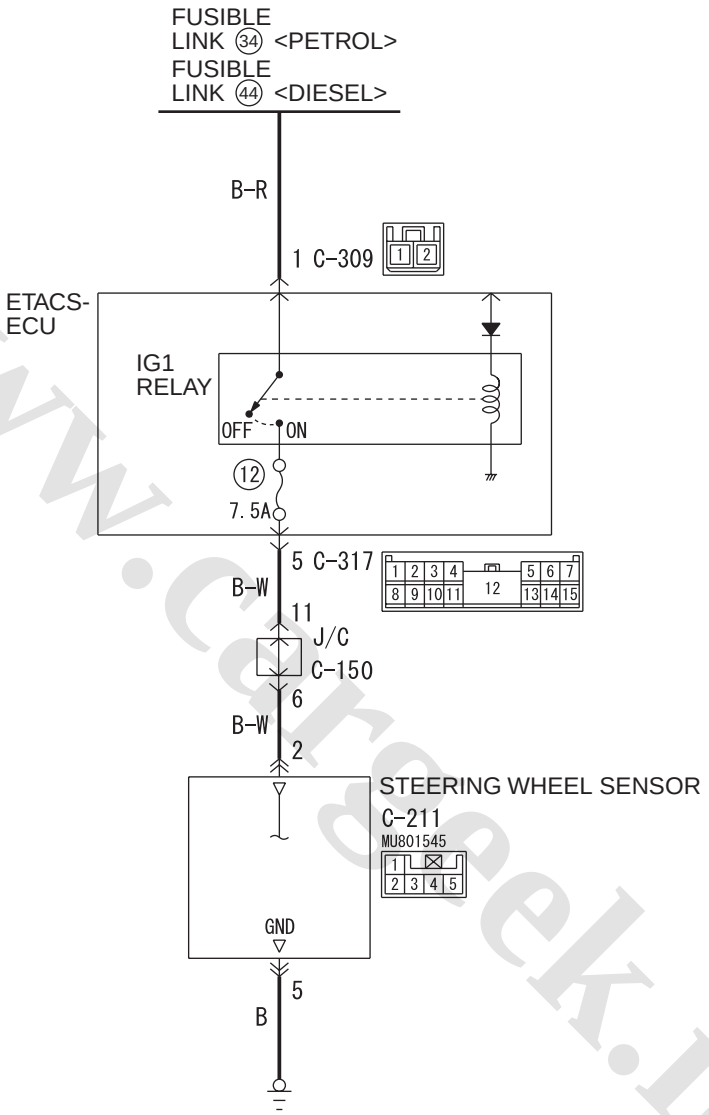

Wire colour code
B : Black LG : Light green G : Green L : Blue W : White Y : Yellow SB : Sky blue
BR : Brown O : Orange GR : Grey R : Red P : Pink V : Violet PU : Purple SI : Silver

ACB02570

Connectors: C-211 <RHD>

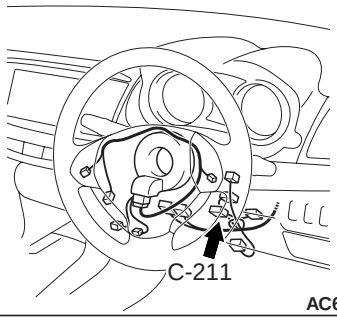

AC612716BE

Connectors: C-211 <LHD>

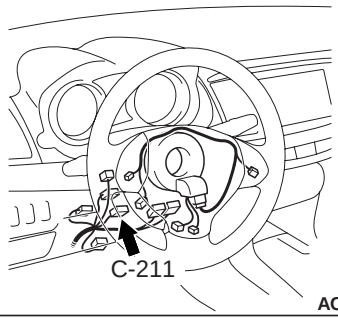

AC612708BB

www.cargeek.ir

www.CarGeek.ir

⚠ CAUTION

- **If there is any problem in the CAN bus lines, an incorrect diagnosis code may be set. Prior to this diagnosis, diagnose the CAN bus lines (Refer to GROUP 54C – CAN Bus Diagnostics Table).**
- **Whenever ECU is replaced, ensure that the CAN bus lines are normal.**
- **When the steering wheel sensor is replaced, always carry out calibration to make ASC-ECU learn the neutral point (Refer to P.35C-183).**

OPERATION

- Steering wheel sensor contains the power supply circuit (terminal No.2) for Steering wheel sensor. The power is supplied from the ETACS-ECU (terminal No.5). The power is supplied from the fusible link No.34 <PETROL> or fusible link No.44 <DIESEL> through the multi-purpose fuse No.12.
- When malfunction occurs in Steering wheel sensor power supply, the communication with M.U.T.-III becomes unavailable.

PROBABLE CAUSES

- Damaged wiring harness and connectors
- Fuse and fusible link malfunction
- Improper tightening of battery terminal
- Battery failure
- Charging system failed
- Steering wheel sensor malfunction

DIAGNOSIS PROCEDURE

STEP 1. Connector check: C-211 steering wheel sensor connector

Q: Is the check result normal?
YES : Go to Step 2.
NO : Repair the damaged connector.

STEP 2. Resistance measurement at C-211 steering wheel sensor connector.

(1) Disconnect C-211 steering wheel sensor connector and measure the resistance available at the wiring harness side of the connector.
(2) Check the continuity between C-211 steering wheel sensor connector terminal No.5 and body earth.

OK: Continuity exists (2 Ω or less)

Q: Is the check result normal?
YES : Go to Step 4.
NO : Go to Step 3.

STEP 3. Check the wiring harness between C-211 steering wheel sensor connector terminal No.5 and the body earth.

- Check the earth wires for open circuit.

Q: Is the check result normal?
YES : The trouble can be an intermittent malfunction (Refer to GROUP 00 – How to use Troubleshooting/inspection Service Points – How to Cope with Intermittent Malfunction).
NO : Repair the wiring harness.

STEP 4. Connector check: C-309 ETACS-ECU connector, C-317 ETACS-ECU connector

Q: Is the check result normal?
YES : Go to Step 5.
NO : Repair the damaged connector.

STEP 5. Voltage measurement at C-309 ETACS-ECU connector

(1) Disconnect C-309 ETACS-ECU connector and measure the voltage available at the wiring harness side of the connector.
(2) Measure the voltage between C-309 ETACS-ECU connector terminal No.1 and body earth.

OK: System voltage

Q: Is the check result normal?
YES : Go to Step 7.
NO : Go to Step 6.

STEP 6. Check the wiring harness between fusible link No. 34 <PETROL> or No. 44 <DIESEL> and C-309 ETACS-ECU connector terminal No.1.

- Check the power supply lines (battery power supply) for open circuit and short circuit.

Q: Is the check result normal?
YES : The trouble can be an intermittent malfunction (Refer to GROUP 00 – How to use Troubleshooting/How to Cope with Intermittent Malfunctions).
NO : Repair the wiring harness.

STEP 7. Measure the voltage at the C-211 steering wheel sensor connector.

(1) Disconnect C-211 steering wheel sensor connector and measure the voltage at the wiring harness side of the connector.
(2) Turn the ignition switch to the ON position.
(3) Measure the voltage between the terminal No.2

www.cargeek.ir

www.CarGeek.ir

and the body earth.

OK: Approximately system voltage

Q: Is the check result normal?
YES : No action is necessary and testing is complete.
NO : Go to Step 8.

STEP 8. Check the fuse No.12.
Visually check for open circuit in fuse No.12.

Q: Is the check result normal?
YES : Go to Step 9.
NO : The short circuit may be present in the power supply circuit. Check the wiring harness between the C-211 steering wheel sensor connector terminal No.2 and the C-317 ETACS-ECU connector terminal No.5, and repair if necessary. And then replace the fuse No.12.

STEP 9. Check the wiring harness between C-211 steering wheel sensor connector terminal No.2 and C-317 ETACS-ECU connector terminal No.5.
- Check the power supply lines (battery power supply) for open circuit.

Q: Is the check result normal?
YES : Go to Step 10.
NO : Repair the wiring harness between the C-211 steering wheel sensor connector terminal No.2 and the C-317 ETACS-ECU connector terminal No.5.

STEP 10. M.U.T.-III other system data list
Check the input signal of IG1 relay.
- Turn the ignition switch to the ON position.

Item No.	Item name	Normal condition
Item 254	IG voltage	System voltage

OK: Normal condition is displayed.

Q: Is the check result normal?
YES : Replace the steering wheel sensor.
NO : Refer to GROUP 54A - ETACS – Input Signal Procedures/Input Signal Procedure 2 "The ignition switch (IG1) signal is not received." .

Inspection Procedure 14: ABS/stability control/TCL operates too frequently.

⚠ CAUTION
- **If there is any problem in the CAN bus lines, an incorrect diagnosis code may be set. Prior to this diagnosis, always diagnose the CAN bus lines (Refer to GROUP 54C – CAN Bus Diagnostics Table).**
- **Whenever ECU is replaced, ensure that the CAN bus lines are normal.**

COMMENTS ON TROUBLE SYMPTOM
- Although the cause of the trouble cannot be clearly resolved since it depends on the running status and road surface condition, the malfunction of the hydraulic circuit may occur if any diagnosis code is not detected.
- If wheels and tyres other than the ones with genuine specified size are mounted, the ABS/stability control/TCL may be activated prematurely.
- If a non-genuine braking device or non-genuine impact reduction device is mounted, the ABS/stability control/TCL may be activated prematurely.

PROBABLE CAUSES
- Mounting of wheels and tyres other than with genuine specified size
- Tyre pressure abnormality
- Tyre wear and deterioration
- Mounting of non-genuine braking device or impact reduction device
- Wheel alignment abnormality
- Malfunction of brake related parts
- Malfunction of the wheel speed sensor
- Malfunction of the G and yaw rate sensor
- Steering wheel sensor malfunction
- Malfunction of hydraulic unit (integrated with ASC-ECU)
- Malfunction of hydraulic circuit
- External radio wave noise interference

www.cargeek.ir

www.CarGeek.ir

DIAGNOSIS PROCEDURE

STEP 1. Check the wheels and the tyres.
Carry out the following check.
- Size check of wheels and tyres
- Tyre wear and deterioration statuses
- Check the tyre pressure.

NOTE: For the tyre pressure, refer to the tyre pressure label attached to the lower section of driver's side door striker.

Q: Is the check result normal?
YES : Go to Step 2.
NO : Correct the wheels and tyres in good condition. Then go to Step 9.

STEP 2. Diagnosis code check
Use M.U.T.-III to check the diagnosis code for the ASC system (Refer to P.35C-16).

Q: Is the check result normal?
YES : Go to Step 3.
NO : Carry out the diagnosis for the diagnosis code chart (Refer to P.35C-16). Then go to Step 9.

STEP 3. Check of brake system related components other than hydraulic unit (integrated with ABS-ECU)
At the same time with the following checks, also check that no parts other than the genuine parts are mounted.
- Brake pad check (Refer to GROUP 35A – On-vehicle Service/Brake Pad Check).
- Brake disc runout check (Refer to GROUP 35A – On-vehicle Service/Brake Disc Check).
- Brake drag force check (Refer to GROUP 35A – On-vehicle Service/Brake Drag Force Check).

Q: Is the check result normal?
YES : Go to Step 4.
NO : Repair or replace the part(s) having damage or other problems. Then go to Step 9.

STEP 4. Wheel alignment check
At the same time with the following checks, also check that no parts other than the genuine parts are mounted.
- Front wheel alignment check (Refer to GROUP 33 – On-vehicle Service/Front Wheel Alignment Check and Adjustment).
- Rear wheel alignment check (Refer to GROUP 34 – On-vehicle Service/Rear Wheel Alignment Check and Adjustment).

Q: Is the check result normal?
YES : Go to Step 5.
NO : Repair or replace the part(s) having damage or other problems. Then go to Step 9.

STEP 5. Wheel speed sensor check
Check that no non-genuine electronic device or no wiring harness of other than genuine electronic device is mounted near the wheel speed sensor (at wheel speed detection section and wiring harness section) (Refer to P.35C-188).

Q: Is the check result normal?
YES : Go to Step 6.
NO : Remove the non-genuine electronic device or the wiring harness of non-genuine electronic device. Then go to Step 9.

STEP 6. M.U.T.-III data list
Check the following data list (Refer to P.35C-172).
- Item 01: FL wheel speed sensor
- Item 02: FR wheel speed sensor
- Item 03: RL wheel speed sensor
- Item 04: RR wheel speed sensor
- Item 08: Lateral G-sensor
- Item 11: Steering angle sensor
- Item 12: Yaw rate sensor

Q: Is the check result normal?
YES : Go to Step 7.
NO (Abnormality with items 01 to 04) : Check the installation status of corresponding wheel speed sensor (Refer to P.35C-188).
NO (Abnormality with items 08, 12) : Check the installation status of G and yaw rate sensor (Refer to P.35C-189).
NO (Abnormality with item 11) : Check the installation status of steering wheel sensor (Refer to P.35C-190).

www.cargeek.ir

www.CarGeek.ir

STEP 7. Hydraulic unit check

Carry out the following actuator tests, and check if they work normally (Refer to P.35C-175).

- Item No. 01: FL wheel ABS
- Item No.02: FR wheel ABS
- Item No.03: RL wheel ABS
- Item No.04: RR wheel ABS
- Item No.05: FL wheel TCL
- Item No.06: FR wheel TCL
- Item No.07: RL wheel TCL
- Item No.08: RR wheel TCL

Q: Is the check result normal?

YES : Go to Step 8.

NO : Replace the hydraulic unit (integrated with ASC-ECU) (Refer to P.35C-185). Then go to Step 9.

STEP 8. ABS/stability control/TCL operation check

Q: Is the check result normal?

YES : Intermittent malfunction (Refer to GROUP 00 – How to Use Troubleshooting/How to Cope with Intermittent Malfunctions).

NO : Replace the hydraulic unit (integrated with ASC-ECU) (Refer to P.35C-185). Then go to Step 9.

STEP 9. ABS/stability control/TCL operation check

Q: Is the check result normal?

YES : This diagnosis is complete.

NO : Return to Step 1.

Inspection Procedure 15: ESS inoperative or improper operative

⚠ CAUTION

- **If there is any problem in the CAN bus lines, an incorrect diagnosis code may be set. Prior to this diagnosis, diagnose the CAN bus lines (Refer to GROUP 54C – CAN Bus Diagnostics Table).**
- **Whenever ECU is replaced, ensure that the CAN bus lines are normal.**

COMMENTS ON TROUBLE SYMPTOM

In case of this trouble symptom, ESS operation may be disabled. Diagnosis code may be set by the ASC system using M.U.T.-III.

NOTE: Before carrying out the troubleshooting, ask the user and confirm the driving conditions when the failure has occurred.

PROBABLE CAUSES

- Low battery voltage
- Wiring harness or connector failure of CAN bus line
- The ASC-ECU is defective.
- Different ETACS-ECU, abnormal variant coding information
- Different ASC-ECU.
- Malfunction of ETACS-ECU.

DIAGNOSIS PROCEDURE

STEP 1. Hydraulic unit (integrated with ASC-ECU) check

Check the hydraulic unit (integrated with ASC-ECU) part No.

Q: Is the check result normal?

YES : Go to Step 2.

NO : Replace the hydraulic unit (integrated with ASC-ECU) (Refer to P.35C-185). Then go to Step 2.

STEP 2. ETACS-ECU check

Check the ETACS-ECU part No.

Q: Is the check result normal?

YES : Go to Step 3.

NO : Replace ETACS-ECU (Refer to GROUP 54A – ETACS-ECU). Then go to Step 3.

STEP 3. Diagnosis code check

Use M.U.T.-III to check the diagnosis code for the ASC system and ETACS-ECU (Refer to P.35C-16 and GROUP 54A – ETACS/Diagnosis code chart).

Q: Is the check result normal?

YES : Go to Step 4.

NO : Carry out the diagnosis for the diagnosis code. (Refer to P.35C-16 or GROUP 54A – ETACS/Diagnosis code chart). Then go to Step 4.

www.cargeek.ir

www.CarGeek.ir

STEP 4. M.U.T.-III actuator test
Perform the following actuator test, and check if the ESS operation (Refer to P.35C-175).
- Item No.10: ESS test mode

Q: Is the check result normal?
YES : This diagnosis is complete.
NO : Go to Step 5.

STEP 5. Check ETACS coding data
Refer to GROUP 00 – Precautions before Service/ Coding List .

ESS
OK: Present

Q: Is the check result normal?
YES : Go to Step 6.
NO : Replace ETACS-ECU (Refer to GROUP 54A – ETACS-ECU). Then go to Step 9.

STEP 6. Check the ASC-ECU power supply circuit.
Refer to P.35C-159.

Q: Is the check result normal?
YES : Go to Step 7.
NO : Carry out the diagnosis of ASC-ECU power supply circuit system (Refer to P.35C-159). Then go to Step 9.

STEP 7. M.U.T.-III actuator test
Perform the following actuator test, and check if the ESS operation (Refer to P.35C-175).
- Item No.10: ESS test mode

Q: Is the check result normal?
YES : This diagnosis is complete.
NO : Replace ETACS-ECU (Refer to GROUP 54A – ETACS-ECU). Then go to Step 8.

STEP 8. M.U.T.-III actuator test
Perform the following actuator test, and check if the ESS operation (Refer to P.35C-175).
- Item No.10: ESS test mode

Q: Is the check result normal?
YES : This diagnosis is complete.
NO : Replace the hydraulic unit (integrated with ASC-ECU) (Refer to P.35C-185). Then go to Step 9.

STEP 9. M.U.T.-III actuator test
Perform the following actuator test, and check if the ESS operation (Refer to P.35C-175).
- Item No.10: ESS test mode

Q: Is the check result normal?
YES : This diagnosis is complete.
NO : Return to Step 1.

Inspection procedure 16: The initial check sound of hydraulic unit is loud.

⚠ CAUTION
When installing brake tube, match the axial centre of flare nut and brake tube with the centre of hole at the hydraulic unit side, and check that the fluid does not leak.

COMMENT ON TROUBLE SYMPTOM
The operation sound may be decreased by reducing the load at the rubber mount portion of the brake tube and hydraulic unit.

PROBABLE CAUSES
- Improper installation of the hydraulic unit
- Improper installation of the brake tube

DIAGNOSIS PROCEDURE

DRIVING CHECK
(1) Turn the ignition switch from the "LOCK" (OFF) position to the "ON" position.
(2) When vehicle speed reaches 10 km/h, check the operating sound volume and compare it with that of the same model.

OK: The operating sound is the same volume or less by comparing with that of the same model.

Q: Is the check result normal?
YES : This diagnosis is complete.
NO : Carry out adjustment for hydraulic unit installation. (Refer to P.35C-179).

DATA LIST REFERENCE TABLE

M1355001500960

The following items of ECU input data can be read using M.U.T.-III.

www.cargeek.ir

www.CarGeek.ir

The system is normal.

Item No.	Check item	Check condition		Normal condition
01	FL wheel speed sensor	Perform a test run of the vehicle.		The speedometer display and the M.U.T.-III display almost agree with each other. (During stop: approximately 0.7km/h)
02	FR wheel speed sensor			
03	RL wheel speed sensor			
04	RR wheel speed sensor			
05	Power supply voltage			System voltage (10 to 18 V ASC operatable range)
07	Brake switch (input)	The brake pedal is depressed.		ON
		The brake pedal is released.		OFF
08	Lateral G sensor (+: left turn, -: right turn)	Vehicle stopped (level)		-0.11 to 0.11 G
		Running		-1 to 1 G
09	G sensor (+: deceleration, -: acceleration)	Vehicle stopped (level)		0 G*1 (fixed value)
		Vehicle stopped (level)	Idle neutral control	-0.11 to 0.11 G
		Running		0 G*1 (fixed value)
10	Master cylinder pressure (+: pressure increase, -: pressure decrease)	The brake pedal is depressed.		Increases by the amount of the brake pedal depression.
		The brake pedal is released.		-3 to 3 bar
11	Steering angle (+: left turn, -: right turn)	Vehicle stopped (the steering wheel is in the neutral position)		-6 to 6 deg
		Running		Nearly the same as the steering wheel operation angle <-720 to 720 deg (ASC-ECU normal detection value)>
				Nearly the same as the steering wheel operation angle <-850 to 850 deg (Sensor normal value as a single unit)>
12	Yaw rate sensor (+: left turn, -: right turn)	Vehicle stopped (level)		-3.6 to 3.6 deg/s
		Running		-100 to 100 deg/s
14	Brake switch	The brake pedal is depressed.		ON
		The brake pedal is released.		OFF
15	Emission test mode	Emission test mode: ON		ON
		Emission test mode: OFF		OFF
26	Brake fluid pressure switch	Brake fluid level is lower than the "LOWER" marking.		Low
		Brake fluid level is higher than the "LOWER" marking.		Normal

www.cargeek.ir

www.CarGeek.ir

Item No.	Check item	Check condition	Normal condition
28	ASC/TCL off switch	When the ASC OFF switch is not operated (when the ASC control is available)	ON
		When the ASC OFF switch is operated (pressed and held for 3 seconds or more)(when the ASC control is prohibited)	OFF
		When the ASC OFF switch is operated (pressed and held for 15 seconds or more)(when the ASC OFF control is prohibited by fail-safe function)*2	ON
45	SAS OK flag	When the steering wheel sensor neutral point is learned	Comp
		When the steering wheel sensor neutral point is not learned	Not Comp
		When the steering wheel sensor is defective	SAS fail
			SAS fail&No Comp
65	Engine Speed	When the accelerator pedal is depressed (engine started)	The tachometer display and the M.U.T.-III display almost agree with each other.
66	Engine torque		Displays the engine torque.
67	APS		Displays the accelerator pedal opening angle.
68	Allow ESP torque request		Permitted
70	Target gear	When the selector lever is operated	Displays the selector lever position.
71	Actual gear		
72	Master cylinder pressure Offset	The difference between the neutral position that was input to the ASC-ECU before the master cylinder pressure sensor calibration and the neutral position after the calibration.	-8 to 8 bar
73	Lateral G sensor offset	The difference between the neutral position that was input to the ASC-ECU before the G and yaw rate sensor calibration and the neutral position after the calibration.	-0.15 to 0.15 G
86	Ignition switch	Ignition switch: ON	ON
87	Ignition switch (input)	Ignition switch: ON	ON
88	Vehicle speed	Perform a test run of the vehicle.	The speedometer display and the M.U.T.-III display almost agree with each other.
91	Brake pressure sensor	The brake pedal is depressed.	ON
		The brake pedal is released.	OFF

www.cargeek.ir

www.CarGeek.ir

Item No.	Check item	Check condition		Normal condition
96	G sensor offset	The difference between the neutral position that was input to ASC-ECU before the G and yaw rate sensor calibration and the neutral position after the calibration.		0 G*1 (fixed value)
		The difference between the neutral position that was input to ASC-ECU before the G and yaw rate sensor calibration and the neutral position after the calibration.	Idle neutral control	-0.15 to 0.15 G
97	Yaw rate sensor offset	The difference between the neutral position that was input to the ASC-ECU before the G and yaw rate sensor calibration and the neutral position after the calibration.		-6.0 to 6.0 deg/s
105	Power supply voltage (input)			System voltage (10 to 18 V ASC operatable range)
120	Parking brake switch (Input)	When the parking brake lever is pulled up:		ON
		When the parking brake lever is released:		OFF
128	A.S.C./TCL off switch (input)	The ASC OFF switch is pressed.		ON
		The ASC OFF switch is not operated.		OFF
138	ESS request	ASC-ECU is demanding the ESS operation of ETACS-ECU.		ON
		ASC-ECU is not demanding the ESS operation of ETACS-ECU.		OFF

NOTE:

- **1: The G and yaw rate sensor does not detect longitudinal acceleration of a vehicle, thus "0 G" is always set.*
- **2: When the ASC OFF switch is pressed and held for 15 seconds, the ASC system returns to the ON status.*

System shutdown by ECU

While ASC-ECU is disabled by the diagnostic function, the M.U.T.-III displayed data is different from the actual measurement.

ACTUATOR TEST TABLE

M1355001600343

Using M.U.T.-III, the following actuators can be forcibly operated:

www.cargeek.ir

www.CarGeek.ir

NOTE:
- *ABS and ASC are operated by ASC-ECU.*
- *When ASC-ECU is disabled due to the fail-safe function, the actuator test cannot be performed.*
- *The actuator test can be performed only when the vehicle is stationary.*
- *While the actuator test is performed, the ABS warning lamp flashes at a rate of 2 Hz.*
- *While the actuator test is performed, the ASC warning display and ASC OFF display illuminate.*
- *After the actuator test has been performed, the brake warning lamp, ABS warning lamp, ASC operation display, and ASC OFF display illuminate until the ignition switch is turned to ON again or the communication between M.U.T.-III and ASC-ECU is terminated.*

Actuator test specifications

Item No.	Check item	Driven component
01	FL wheel ABS drive	Solenoid valve for the corresponding channel of the hydraulic unit and pump motor (simplified inspection mode)
02	FR wheel ABS drive	
03	RL wheel ABS drive	
04	RR wheel ABS drive	
05	FL wheel TCL drive	
06	FR wheel TCL drive	
07	RL wheel TCL drive	
08	RR wheel TCL drive	
09	Engine TCL drive	Outputs the engine torque control signal (engine torque = 0 N·m) to the engine ECU for three seconds.
10	ESS test mode	ASC-ECU requires an ESS operation of ETACS-ECU.

www.cargeek.ir

www.CarGeek.ir

Operation pattern of items 01 to 08

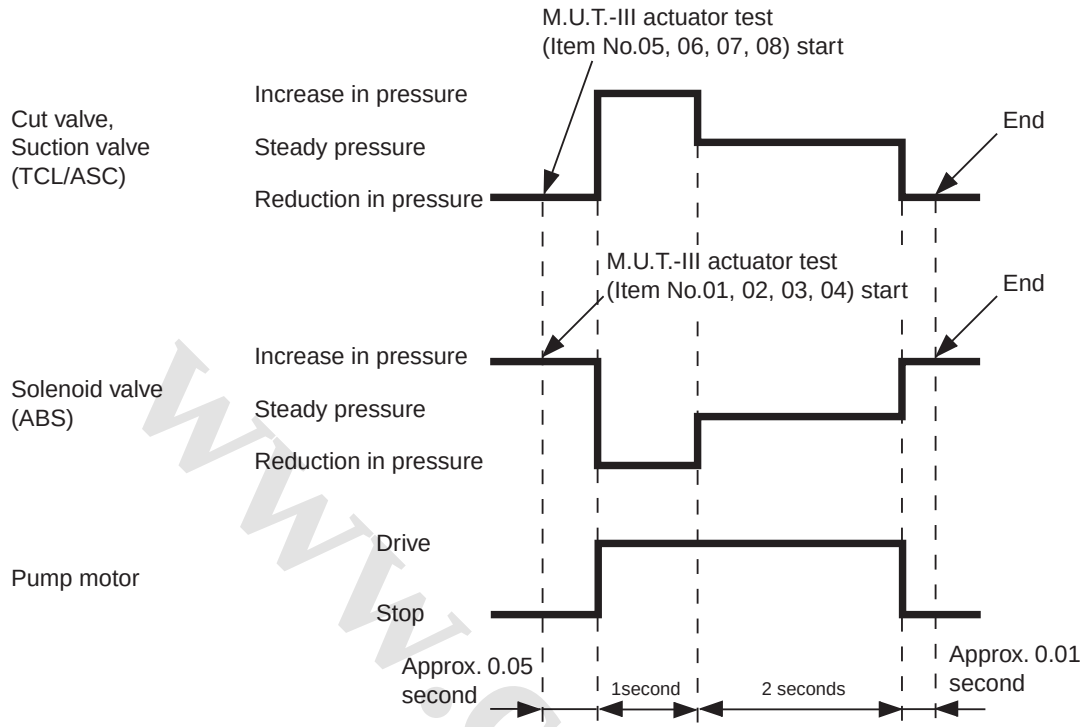

AC400776AH

CHECK AT ECU TERMINALS

M1355001700737

TERMINAL VOLTAGE CHECK

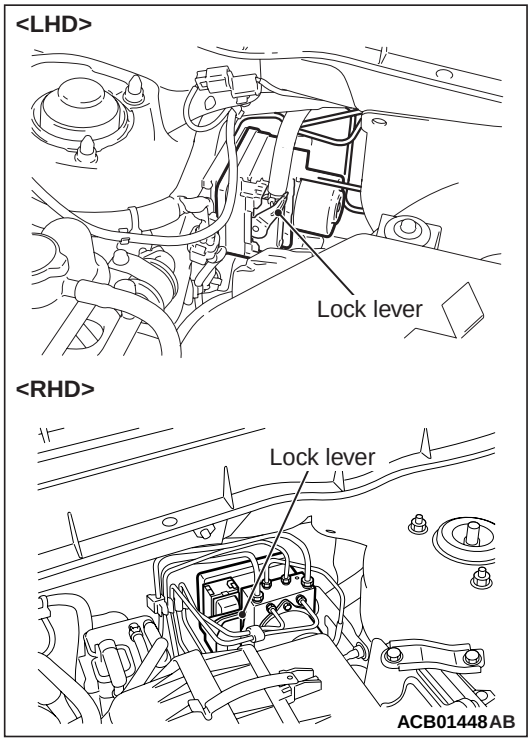

1. Operate the lock lever to disconnect the ASC-ECU harness connector as shown in the figure.

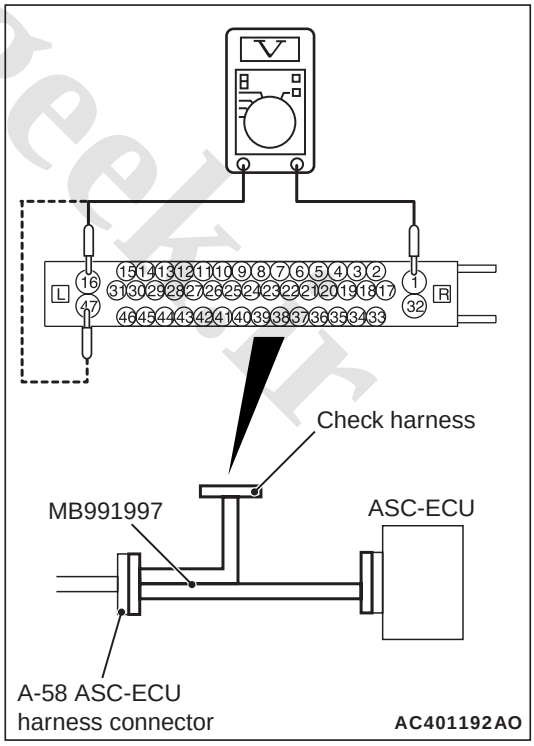

2. Connect the special tool ASC check harness (MB991997) to measure the voltage between each check connector terminal and the earth terminal (No. 16 or 47).

www.cargeek.ir

www.CarGeek.ir

Terminal No.	Check item	Check condition	Normal condition
1	Motor power supply	Ignition switch: ON (OFF)	Approximately system voltage
2	ASC-ECU power supply	Ignition switch: ON	Approximately system voltage
		Ignition switch: OFF	Approximately system voltage
8	Ignition switch signal for ASC-ECU activation	Ignition switch: ON	Approximately system voltage
		Ignition switch: OFF	1V or less
22	G and yaw rate sensor power supply	Ignition switch: ON	Approximately system voltage
32	Solenoid valve power supply	Ignition switch: ON (OFF)	Approximately system voltage
34	Wheel speed sensor (FR) power supply	Ignition switch: ON	Approximately system voltage
36	Wheel speed sensor (RL) power supply	Ignition switch: ON	Approximately system voltage
43	Wheel speed sensor (RR) power supply	Ignition switch: ON	Approximately system voltage
45	Wheel speed sensor (FL) power supply	Ignition switch: ON	Approximately system voltage

CONTINUITY CHECK AT WIRING HARNESS-SIDE CONNECTOR

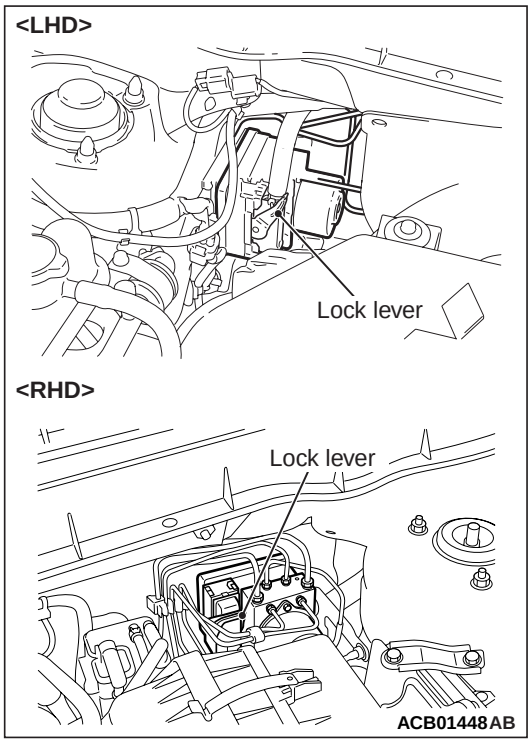

1. Operate the lock lever to disconnect the ASC-ECU harness connector as shown in the figure.

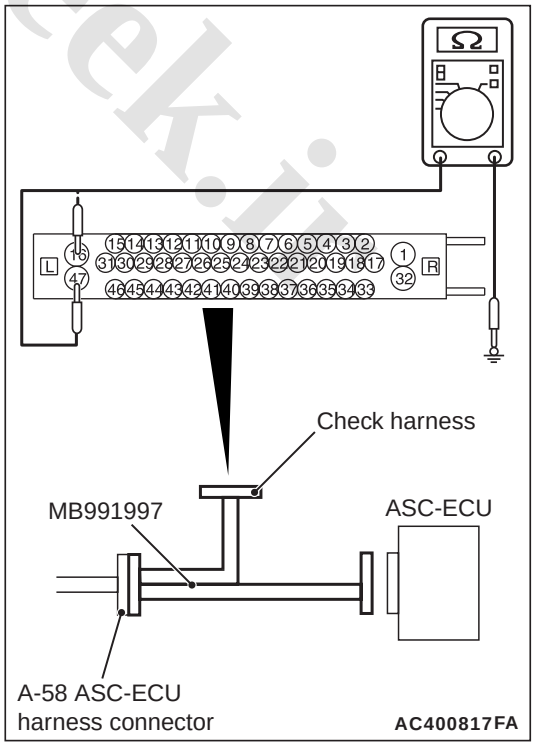

www.cargeek.ir

www.CarGeek.ir

2. When performing the continuity check, turn the ignition switch to LOCK (OFF) position, connect the special tool ASC check harness (MB991997) as shown in the figure, and disconnect the ASC-ECU connector.
3. Check the continuity between terminals shown in the chart below.
4. Terminal layout is shown in the figure.

Terminal No.	Signal	Normal condition
16 – body earth	Earth	Continuity exists (2Ω or less)
47 – body earth	Earth	

ON-VEHICLE SERVICE

WHEEL SPEED SENSOR OUTPUT CURRENT MEASUREMENT

M1355027300029

Refer to GROUP 35B – Wheel speed sensor output current measurement .

HYDRAULIC UNIT (HU) CHECK

M1355006100202

1. Raise the vehicle using a jack and support the specified points with a rigid rack.

⚠ CAUTION

Before connecting or disconnecting M.U.T.-III, always turn the ignition switch to the LOCK (OFF) position.

2. Before setting M.U.T.-III, turn the ignition key to the LOCK (OFF) position.
3. Confirm that the selector lever is in the "N" position, and then start the engine.
4. When carrying out the actuator tests No.01 to 04, perform the actuator tests using M.U.T.-III while depressing the brake pedal. When carrying out the actuator tests No.05 to 08, perform the actuator tests using M.U.T.-III without depressing the brake pedal. When carrying out the actuator tests, rotate the wheel by hands to confirm that the braking force changes.

   NOTE:
   - *While performing the actuator test, the ABS warning lamp flashes at a rate of 2 Hz.*
   - *When ASC-ECU is disabled due to the fail-safe function, the M.U.T.-III actuator test cannot be performed.*
   - *After the actuator test has been performed, the ABS warning lamp, brake waning lamp, ASC ON indicator lamp, and ASC OFF indicator lamp illuminate until the ignition switch is turned to ON again or the communication between M.U.T.-III and ASC-ECU is terminated.*

www.cargeek.ir

www.CarGeek.ir

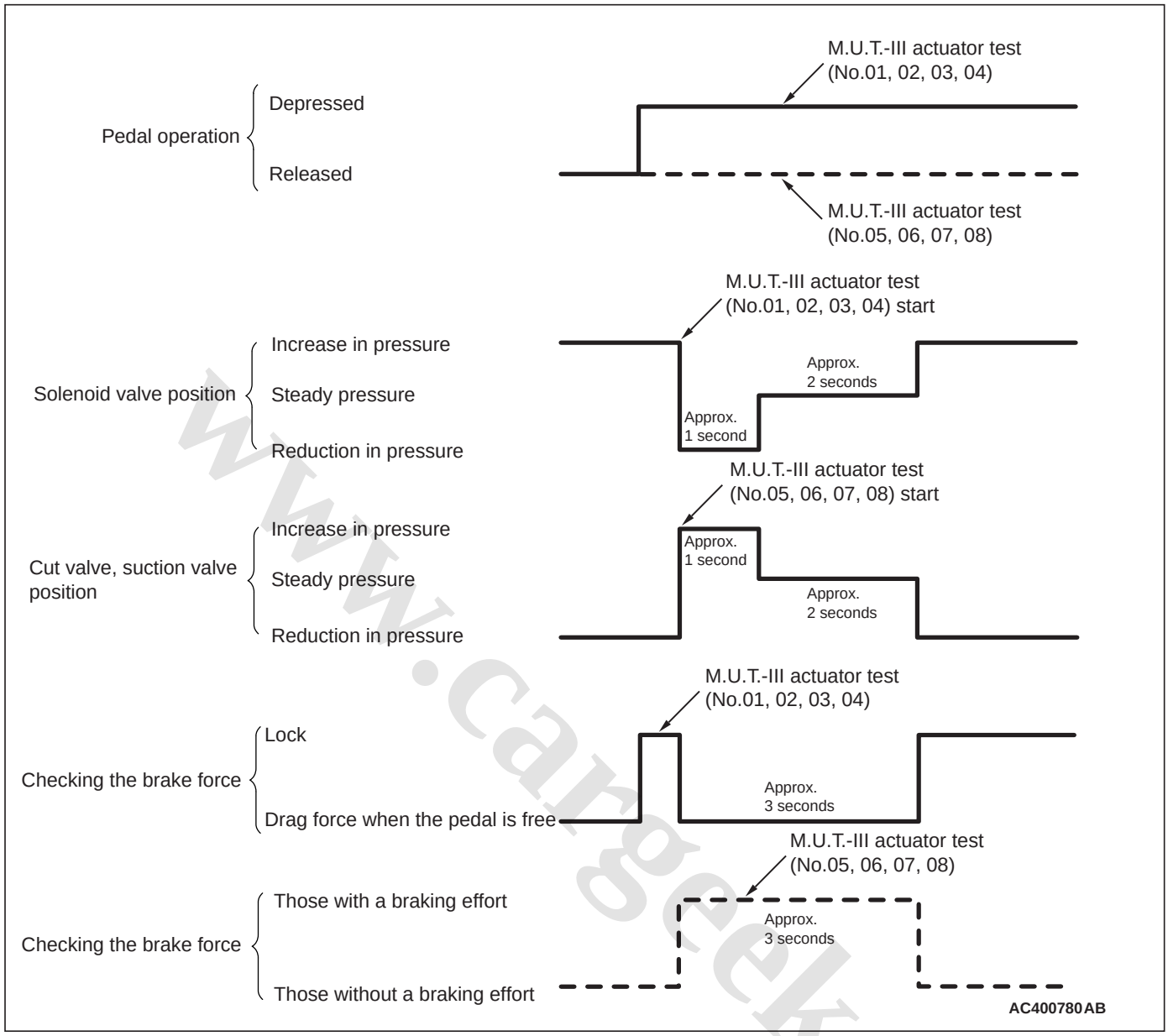

5. This is indicated as shown in the above.

6. When any malfunction has been found, take a necessary action according to the "Judgment Table."

www.cargeek.ir

www.CarGeek.ir

Judgment Table

Display on M.U.T.-III	Operation	Test result	Judgment	Cause	Measure
01 FL wheel ABS drive 02 FR wheel ABS drive 03 RL wheel ABS drive 04 RR wheel ABS drive	• Depress the brake pedal to lock the wheel. • Select the vehicle to be inspected using M.U.T.-III, perform the actuator test. • Rotate the selected wheel by hands to confirm the braking force.	Braking force decreases for 3 seconds from the lock status.	Normal	–	–
		The wheel does not lock even if the brake pedal is depressed.	Error	Clogged brake line other than hydraulic unit	Check and clean the brake line.
				Clogged hydraulic circuit in the hydraulic unit	Replace the hydraulic unit assembly.
		Braking force does not decrease.		Faulty routing of hydraulic unit brake tube	Route the brake tube correctly.
				Malfunction of hydraulic unit solenoid valve operation	Replace the hydraulic unit assembly.
05 FL wheel TCL drive 06 FR wheel TCL drive 07 RL wheel TCL drive 08 RR wheel TCL drive	• Select the vehicle to be inspected using M.U.T.-III, perform the actuator test. • Rotate the selected wheel by hands to confirm the braking force.	Lock condition occurs for 3 seconds from the status without braking force.	Normal	–	–
		The wheel does not lock.	Error	• Faulty routing of hydraulic unit brake tube • Clogged brake line other than hydraulic unit	Check and clean the brake line.
				Clogged hydraulic circuit in the hydraulic unit	Replace the hydraulic unit assembly.

7. After the inspection, turn the ignition switch to the LOCK (OFF) position, and then disconnect M.U.T.-III.

Hydraulic unit installation adjustment

Refer to P.35C-185.

1. Operate the pre-removal steps for the hydraulic unit.
2. Remove all brake tubes.
3. Remove the protector.
4. Loosen the mounting bolt and nut of the hydraulic unit bracket.
5. Install all brake tubes temporarily.
6. Shake hydraulic unit to all directions with both hands to make the hydraulic unit bracket insulator fit with the unit.
7. Install the the hydraulic unit bracket with mounting bolt and nut not to load the brake tube.
8. Install the protector.
9. Install all brake tubes securely.

   NOTE: Install the flare nut taking care not to let the brake tube turn together.
10. Operate the post-installation steps of the hydraulic unit.

www.cargeek.ir

www.CarGeek.ir

MEASURES FOR DISCHARGED BATTERY

M1355006200102

⚠ CAUTION

Because the vehicle posture when applying the brakes becomes unstable, do not leave ABS/ASC disabled (for example, ASC-ECU connector disconnection).

When starting the engine using a booster cable with the battery fully discharged, if you begin driving the vehicle before the battery is fully charged, the engine misfire may occur and you cannot start the vehicle. This is because ABS/ASC consumes more electric current to perform the self-check. In this case, charge the battery fully.

ALL SENSOR CALIBRATION (G AND YAW RATE SENSOR, STEERING WHEEL SENSOR, BRAKE FLUID PRESSURE SENSOR)

M1357003900012

⚠ CAUTION

Before carrying out the calibration, check that the diagnosis code related to the steering wheel sensor, G and yaw rate sensor, or brake fluid pressure sensor is not set.

⚠ CAUTION

When the next operation has been completed, carry out the calibration to make ASC-ECU learn the neutral point of the steering wheel sensor, G and yaw rate sensor, and brake fluid pressure sensor.

- **ASC-ECU replacement**

⚠ CAUTION

Carry out the calibration under the following conditions.

- **The vehicle has one occupant (driver) only.**
- **Turn the steering wheel to set the wheels in the straight-ahead positions.**
- **The brake pedal is not depressed. (The stop lamp switch is OFF.)**

1. Park the vehicle on a level surface.

⚠ CAUTION

Before connecting or disconnecting M.U.T.-III, always turn the ignition switch to the LOCK (OFF) position.

2. Before setting M.U.T.-III, turn the ignition key to the LOCK (OFF) position.
3. Turn the ignition switch to the ON position.
4. Select "ABS/ASC/ASTC."
5. Select "Special function."
6. Select "Sensor calibration."
7. Select "all sensor calibration."
8. Before removing M.U.T.-III from the vehicle, turn the ignition key to the LOCK (OFF) position.

G AND YAW RATE SENSOR CALIBRATION

M1355009300313

⚠ CAUTION

Before performing calibration, check that the G and yaw rate sensor-related diagnosis code is not set.

⚠ CAUTION

After the next operation has been completed, carry out the calibration to make ASC-ECU learn the neutral point of the G and yaw rate sensor.

- **G and yaw rate sensor replacement**
- **ASC-ECU replacement**

Park the vehicle on a level surface.

1. Turn the ignition switch to the ON position.
2. Turn the ignition key to the LOCK (OFF) position.

⚠ CAUTION

Before connecting or disconnecting M.U.T.-III, always turn the ignition switch to the LOCK (OFF) position.

3. Check that the ignition key is in the LOCK (OFF) position, and then set M.U.T.-III.
4. Turn the ignition switch to the ON position.
5. On the Menu, select "System selection."
6. On the "System selection," select "ABS/ASC/ASTC/WSS" in the "System table," and then click the "OK" button.
7. In the "ABS/ASC/ASTC/WSS" field, select "Special function".
8. Among the selected items, select "Learn lateral G-sensor neutral position" and then press the "OK" button.
9. "Learn lateral G-sensor neutral position: Are you sure to execute the selected item? Note: Check the execution conditions." is displayed. Then, press the "OK" button.
10. "Execute command: Executed" is displayed. Then, press the "OK" button.
11. The neutral point is learned.
12. Turn the ignition key to the LOCK (OFF) position, and remove M.U.T.-III from the vehicle.

www.cargeek.ir

www.CarGeek.ir

STEERING WHEEL SENSOR CALIBRATION

M1355009200338

⚠ CAUTION

After the next operation has been completed, carry out the following two operations:

- **Alignment adjustment <Front>**
- **Steering wheel sensor (column switch assembly) replacement, removal, installation**
- **ASC-ECU replacement**

1. **Update the neutral position stored in the steering wheel sensor.**
2. **Reset the calibrated value of the steering angle stored in ASC-ECU.**

⚠ CAUTION

- **Before performing the calibration, check if the steering wheel sensor-related diagnosis code is set in ASC-ECU.**
- **When the diagnosis code other than C121A is set, carry out the inspection according to each troubleshooting procedure.**

Park the vehicle on a level surface with tyres and steering wheel positioned in a straight ahead direction.

1. Turn the ignition switch to the ON position.
2. Turn the ignition key to the LOCK (OFF) position.

⚠ CAUTION

Before connecting or disconnecting M.U.T.-III, always turn the ignition switch to the LOCK (OFF) position.

3. Check that the ignition key is in the LOCK (OFF) position, and then set M.U.T.-III.
4. Turn the ignition switch to the ON position.
5. On the Menu, select "System selection."
6. In "System table" of "System selection," select "Steering angle sensor," and then press the "OK" button.
7. In "Steering angle sensor," select "Special function."
8. In "Special function," select "Learn neutral position of steering angle sensor."

   NOTE: When the neutral position of steering angle sensor has been learned, "Neutral position learned already: in order to relearn the neutral position, press the OK button to initialise the steering angle sensor neutral position." is displayed. If it is okay, press the "OK" button.

9. In "Learn neutral position of steering angle sensor," "Initialise neutral position of steering angle sensor" is selected, thus press the "OK" button.

   NOTE: When the neutral position of steering angle sensor has been learned, "Initialise neutral position of steering angle sensor: Do you want to execute? Note: The diagnosis code will be erased." is displayed. Then, press the "OK" button.

10. "Initialise neutral position of steering angle sensor: Completed" is displayed. Then, press the "OK" button.
11. Press the "OK" button.
12. "Learn neutral position of steering angle sensor: Do you want to execute? Note: Execute after the tyres and steering wheel are aligned in a straight ahead direction." is displayed. Then, press the "OK" button.
13. "Learn neutral position of steering angle sensor: Completed" is displayed. Then, press the "OK" button.
14. After turning the ignition switch to LOCK (OFF) position, turn it to the ON position again.
15. On the Menu, select "System selection."
16. On the "System selection," select "ABS/ASC/ASTC/WSS" in the "System table," and then click the "OK" button.
17. In the "ABS/ASC/ASTC/WSS" field, select "Special function".
18. In the "Special function," select "Learn sensor neutral position."
19. In "Learn sensor neutral position," select "Learn neutral position of steering angle sensor," and then press the "OK" button.
20. "Learn neutral position of steering angle sensor: Are you sure to execute the selected item? Note: Check the execution conditions." is displayed. Then, press the "OK" button.
21. "Execute command: Executed" is displayed. Then, press the "OK" button.
22. In the "ABS/ASC/ASTC/WSS" field, select "Self diagnosis." If diagnosis code of "C2205 SAS internal error (past failure)" is set, erase it.
23. The neutral point is learned.
24. Turn the ignition key to the LOCK (OFF) position, and remove M.U.T.-III from the vehicle.

www.cargeek.ir

www.CarGeek.ir

BRAKE FLUID PRESSURE SENSOR CALIBRATION

M1355024100048

⚠ CAUTION

Before performing calibration, check that the brake fluid pressure sensor-related diagnosis code is not set.

⚠ CAUTION

After the next operation has been completed, carry out the calibration to make ASC-ECU learn the neutral position of the brake fluid pressure sensor.

- **When the troubleshooting for code No. C123A is carried out**
- **Brake fluid pressure sensor replacement**
- **ASC-ECU replacement**

⚠ CAUTION

Always perform the calibration with the brake pedal released (stop lamp switch is turned off).

1. Park the vehicle on a level surface.

⚠ CAUTION

Before connecting or disconnecting M.U.T.-III, always turn the ignition switch to the LOCK (OFF) position.

2. Before setting M.U.T.-III, turn the ignition key to the LOCK (OFF) position.
3. Turn the ignition switch to the ON position.
4. Select "ABS/ASC/ASTC."
5. Select "Special function."
6. Select "Sensor calibration."
7. Select "M/C pressure sensor calibration."
8. Before removing M.U.T.-III from the vehicle, turn the ignition key to the LOCK (OFF) position.

ASC OFF SWITCH

REMOVAL AND INSTALLATION

M1355020100303

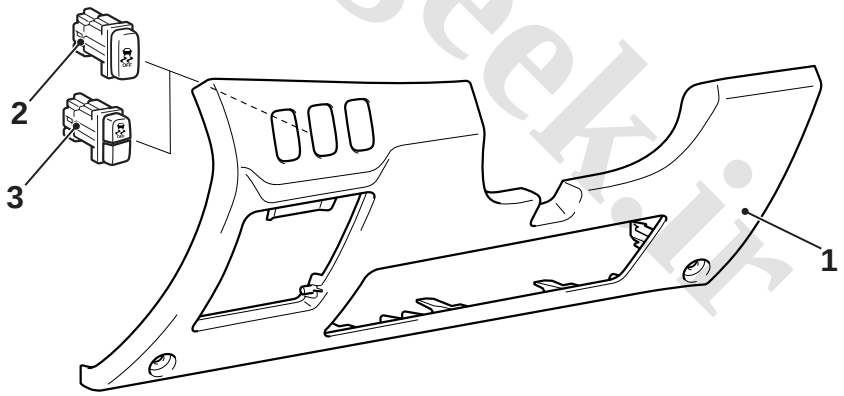

ACA01061 AB

Removal steps

1. Instrument panel lower (Refer to GROUP 52A, Instrument panel lower).

Removal steps (Continued)

2. ASC OFF switch <except AS&G>
3. ASG OFF & ASC OFF switch <AS&G>

www.cargeek.ir

www.CarGeek.ir

INSPECTION

M1355020200258

ASC OFF SWITCH CONTINUITY CHECK

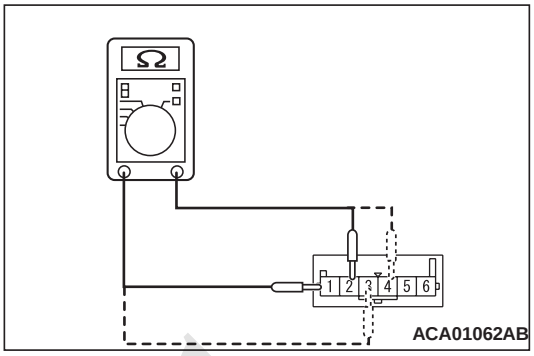

1. As shown in the figure, connect the circuit tester to the ASC OFF switch as a single unit.
2. Check the continuity status when the ASC OFF switch is pressed and when the switch is released.

Item	When the ASC OFF switch is released (Not being operated)	When the ASC OFF switch is pressed
Continuity between terminal No. 1 and No. 2	No continuity	Continuity exists (2 Ω or less)
Continuity between terminal No. 3 and No. 4	Continuity exists	Continuity exists

HYDRAULIC UNIT

REMOVAL AND INSTALLATION

M1355005600884

<LHD>

NOTE: ASC-ECU is located in the hydraulic unit.

www.cargeek.ir

www.CarGeek.ir

⚠ CAUTION

When the hydraulic unit (integrated with ASC-ECU) is replaced, after turning the ignition switch ON or OFF (vehicle information from ETACS-ECU is registered), always carry out the calibration of all sensors (steering wheel sensor, G and yaw rate sensor, and brake fluid pressure sensor) at one time.(Refer to P.35C-182.)

Pre-removal operation	Post-installation operation
• Brake fluid draining.	• Brake fluid refilling and air bleeding (Refer to GROUP 35A – On-vehicle Service, Brake Fluid Level Inspection and Bleeding). • Hydraulic unit check (Refer to).

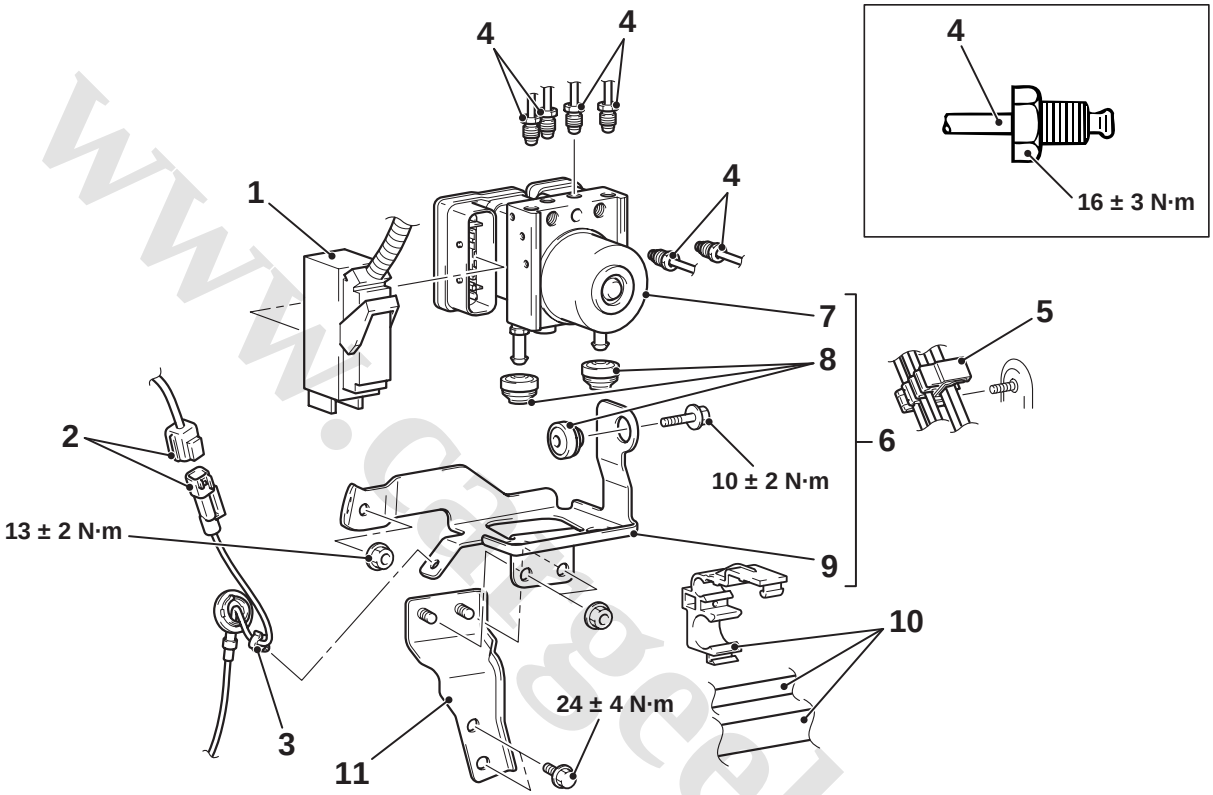

AC611928AB

Removal steps

<<A>>
1. ASC-ECU harness connector
2. Wheel speed sensor harness connector connection
3. Wheel speed sensor harness clip connection

>>A<<
4. Brake tube connection
5. Brake tube clip and body connection

Removal steps (Continued)

<<B>>
6. Hydraulic unit (ASC-ECU) and hydraulic unit bracket
7. Hydraulic unit (ASC-ECU)
8. Hydraulic unit bracket insulator
9. Hydraulic unit bracket B
10. Suction pipe, liquid pipe and clip connection
11. Hydraulic unit bracket A

<RHD>

NOTE: ASC-ECU is located in the hydraulic unit.

www.cargeek.ir

www.CarGeek.ir

⚠ CAUTION

When the hydraulic unit (integrated with ASC-ECU) is replaced, after turning the ignition switch ON or OFF (vehicle information from ETACS-ECU is registered), always carry out the calibration of all sensors (steering wheel sensor, G and yaw rate sensor, and brake fluid pressure sensor) at one time.(Refer to P.35C-182.)

Pre-removal operation	Post-installation operation
• Brake fluid draining • Air cleaner body assembly removal (Refer to GROUP 15 – Air Cleaner <4A9>, <4J1>, <4N1>).	• Air cleaner body assembly installation (Refer to GROUP 15 – Air Cleaner <4A9>, <4J1>, <4N1>). • Brake fluid refilling and air bleeding (Refer to GROUP 35A – On-vehicle Service, Basic Brake System Bleeding). • Hydraulic unit check (Refer to).

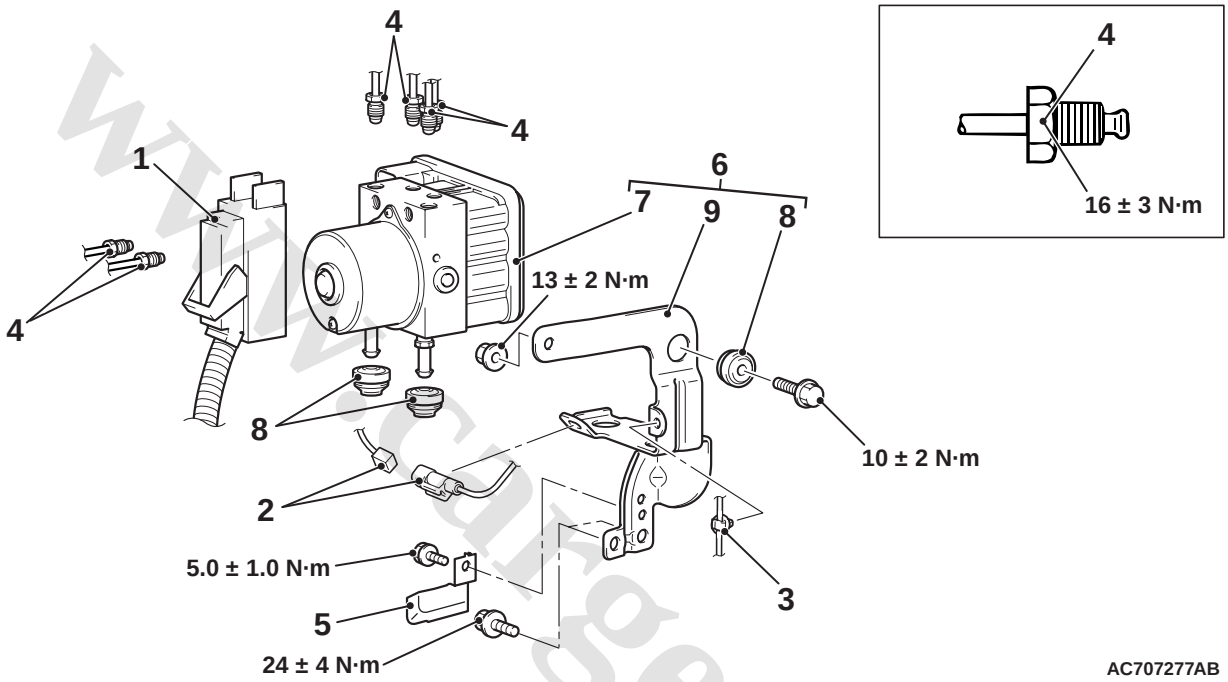

Removal steps

<<A>>
1. ASC-ECU harness connector
2. Front wheel speed sensor harness (LH) connector
3. Front wheel speed sensor harness (LH) clip

>>A<<
4. Brake tube connection

Removal steps (Continued)

5. Protector
6. Hydraulic unit (ASC-ECU) and hydraulic unit bracket

<<B>>
7. Hydraulic unit (ASC-ECU)
4. Hydraulic unit bracket insulator
6. Hydraulic unit bracket

www.cargeek.ir

www.CarGeek.ir

REMOVAL SERVICE POINTS

<<A>> ASC-ECU HARNESS CONNECTOR DISCONNECTION

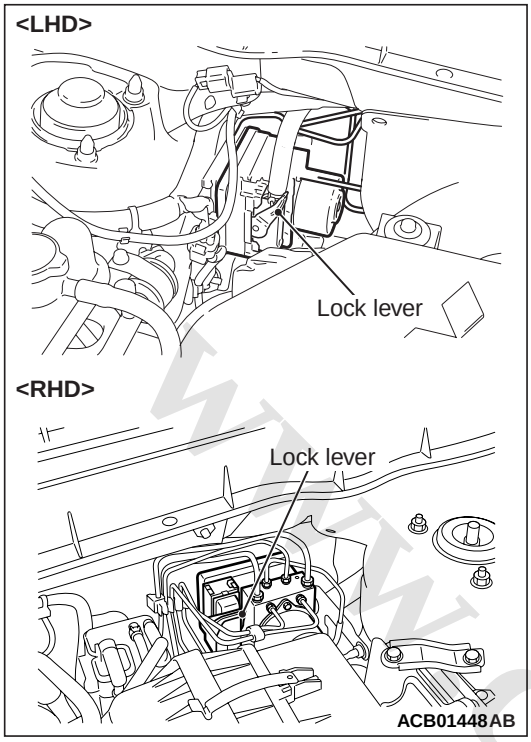

Operate the lock lever to disconnect the ASC-ECU harness connector as shown in the figure.

<<B>> HYDRAULIC UNIT (ASC-ECU) REMOVAL

⚠ CAUTION

- **Be careful when removing the hydraulic unit because it is heavy.**
- **Never loosen the nuts and the bolts because the hydraulic unit cannot be disassembled.**
- **Do not drop or shock the hydraulic unit.**
- **Do not turn the hydraulic unit upside down or lay down the unit because the inner air becomes difficult to be bled.**

INSTALLATION SERVICE POINT

>>A<< BRAKE TUBE CONNECTION

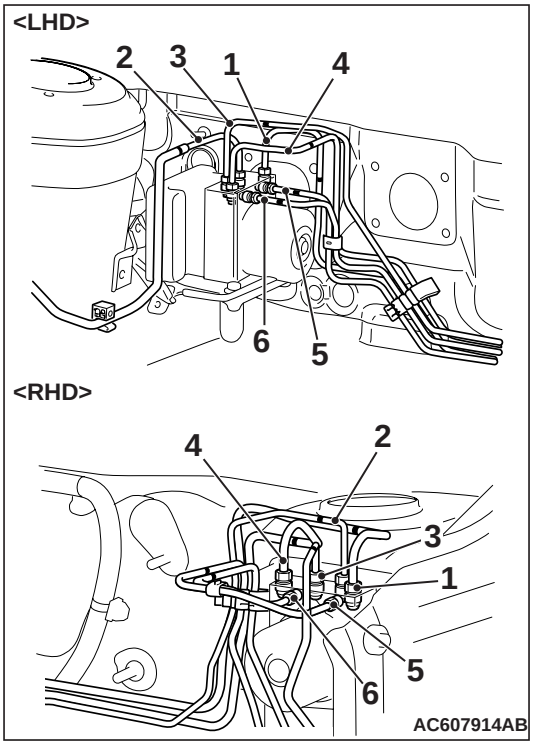

Install the brake pipe to the hydraulic unit as shown in the figure.

1. From master cylinder (primary) <Marking colour: Blue>
2. To front brake (RH) <Marking colour: Orange>
3. To front brake (LH) <Marking colour: Red>
4. From master cylinder (secondary) <Marking colour: Yellow>
5. To rear brake (LH) <Marking colour: Pink>
6. To rear brake (RH) <Marking colour: White>

WHEEL SPEED SENSOR

REMOVAL AND INSTALLATION

M1355005300151

Refer to GROUP 35B, Wheel speed sensor removal and installation .

INSPECTION

M1352008400761

Refer to GROUP 35B, Wheel speed sensor inspection .

www.cargeek.ir

www.CarGeek.ir

G AND YAW RATE SENSOR

REMOVAL AND INSTALLATION

M1355004500420

⚠ CAUTION

- **Do not use impact wrench.**
- **Do not drop or shock the G and yaw rate sensor.**
- **When the G and yaw rate sensor is replaced or installed, always carry out calibration to make ASC-ECU learn the neutral point (Refer to P.35C-182).**

Pre-removal and post-installation steps
Instrument panel console cover removal and installation
(Refer to GROUP 52A – Instrument panel assembly).

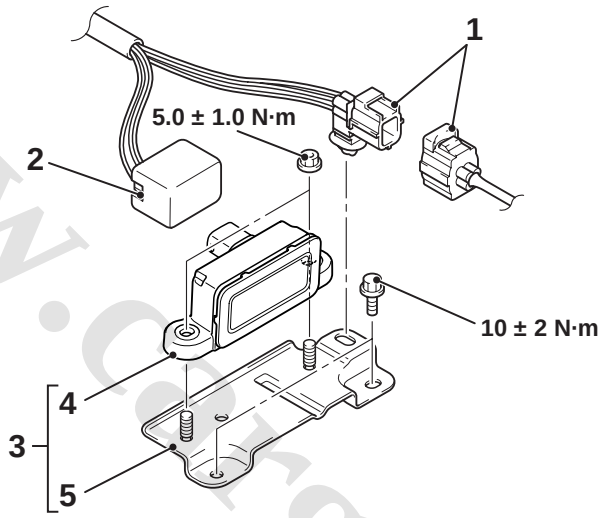

AC904848 AB

Removal steps
1. Oxygen sensor (front) connector
2. G and yaw rate sensor harness connector

Removal steps (Continued)
3. G and yaw rate sensor and G and yaw rate sensor bracket
4. G and yaw rate sensor
5. G and yaw rate sensor bracket

www.cargeek.ir

www.CarGeek.ir

STEERING WHEEL SENSOR

REMOVAL AND INSTALLATION

M1355005100704

⚠ CAUTION

- **Be sure to remove the clock spring from the column switch and centre the clock spring to prevent the damage of steering wheel sensor.**
- **If the centre of the clock spring is not correctly aligned, the steering wheel may not be turned fully or the cable inside the clock spring may be broken, causing the SRS air bag to be inoperative or operated incorrectly.**
- **Before removing the steering wheel/air bag module assembly, refer to GROUP 52B – Service Precautions and Driver's Air Bag Module Clock Spring .**
- **When the steering wheel sensor is replaced or installed, always carry out calibration to make ASC-ECU learn the neutral point (Refer to P.35C-183).**

Pre-removal operation	Post-installation operation
• Driver's airbag module assembly and steering wheel assembly removal (Refer to GROUP 37A – Steering Wheel <hydraulic power steering> or GROUP 37B – Steering Wheel <electrical power steering>).	• Driver's airbag module assembly and steering wheel assembly installation (Refer to GROUP 37A – Steering Wheel <hydraulic power steering> or GROUP 37B – Steering Wheel <electrical power steering>). • Perform steering wheel calibration (Refer to P.35C-183).

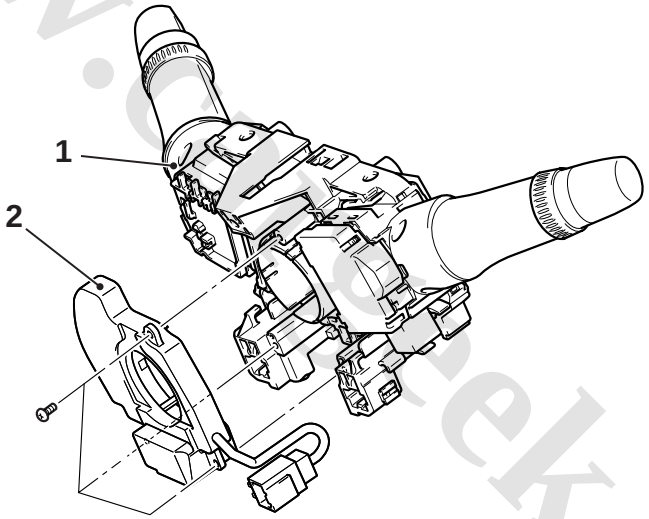

ACA02951AG

Removal steps

- Position the front wheels in a straight ahead direction.

1. Clock spring/column switch assembly (Refer to GROUP 54A – Column Switch).

<<A>> 2. Steering wheel sensor

REMOVAL SERVICE POINT

<<A>> STEERING WHEEL SENSOR REMOVAL

⚠ CAUTION

After removing the steering wheel sensor, do not rotate the sensor rotating part.

www.cargeek.ir

www.CarGeek.ir

GROUP 54

CHASSIS ELECTRICAL

CONTENTS

CHASSIS ELECTRICAL 54A

LOCAL INTERCONNECT NETWORK (LIN) 54B

CONTROLLER AREA NETWORK (CAN) 54C

www.cargeek.ir

www.cargeek.ir

www.CarGeek.ir

GROUP 54A

CHASSIS ELECTRICAL

CONTENTS

BATTERY 54A-11

SERVICE SPECIFICATION(S) 54A-11
ON-VEHICLE SERVICE 54A-11
FLUID LEVEL AND SPECIFIC GRAVITY INSPECTION 54A-11
BATTERY CHARGING 54A-12
BATTERY TEST 54A-12
BATTERY REMOVAL AND INSTALLATION 54A-14
INSPECTION 54A-16
BATTERY CURRENT SENSOR CHECK <VEHICLES FOR EUR (EXCEPT 4AT)> 54A-16

IGNITION SWITCH 54A-17

SPECIAL TOOL(S) 54A-17
TROUBLESHOOTING 54A-20
STANDARD FLOW OF DIAGNOSTIC TROUBLE SHOOTING 54A-20
SYMPTOM CHART 54A-20
SYMPTOM PROCEDURES 54A-21
IGNITION KEY CYLINDER ILLUMINATION LAMP DOES NOT ILLUMINATE/EXTINGUISH NORMALLY. <VEHICLES WITH WCM> 54A-21
MALFUNCTION OF THE IGNITION SWITCH POWER SUPPLY SYSTEM 54A-23
ON-VEHICLE SERVICE 54A-25
INSPECTION 54A-25
IGNITION SWITCH REMOVAL AND INSTALLATION 54A-26
INSPECTION 54A-28
IGNITION SWITCH INSPECTION 54A-28
KEY REMINDER SWITCH INSPECTION . . 54A-28

COMBINATION METER 54A-29

SERVICE SPECIFICATION(S) 54A-29
SPECIAL TOOL(S) 54A-31
TROUBLESHOOTING 54A-33
STANDARD FLOW OF DIAGNOSTIC TROUBLESHOOTING 54A-33
DIAGNOSIS FUNCTION 54A-33
DIAGNOSIS CODE CHART 54A-34
DIAGNOSIS CODE PROCEDURES 54A-35
CODE NO.B1200 ODOMETER FAILURE . . 54A-35
CODE NO.B1201 FUEL INFORMATION ERROR 54A-35
CODE No.B1209 TEST MODE 54A-37
CODE No.B2203 CHASSIS NO. NOT PROGRAMMED 54A-37
CODE No.B2463 RHEOSTAT SWITCH SEIZURE 54A-38
CODE No.B2464 METER INFORMATION SWITCH SEIZURE 54A-39
CODE No.B2465 IGNITION SWITCH SIGNAL ERROR 54A-40
CODE No.U0019 BUS OFF 54A-41
CODE No.U0100 TIME-OUT DURING CAN COMMUNICATION WITH ENGINE-ECU . . 54A-41
CODE No.U0141 TIME-OUT DURING CAN COMMUNICATION WITH ETACS-ECU . . . 54A-42
CODE No.U0151 TIME-OUT DURING CAN COMMUNICATION WITH SRS-ECU 54A-43
CODE No.U0164 TIME-OUT DURING CAN COMMUNICATION WITH A/C-ECU 54A-44
CODE No.U0168 TIME-OUT DURING CAN COMMUNICATION WITH WCM 54A-45
CODE No.U0184 TIME-OUT DURING CAN COMMUNICATION WITH AUDIO UNIT . . . 54A-46
CODE No.U0245 TIME-OUT DURING CAN COMMUNICATION WITH AUDIO VISUAL NAVIGATION UNIT 54A-47
CODE No.U1415 CODING DATA NOT WRITTEN

www.cargeek.ir

www.CarGeek.ir

. . . . . 54A-48
SYMPTOM CHART. 54A-49
SYMPTOM PROCEDURES 54A-50
POWER SUPPLY CIRCUIT 54A-50
THE SPEEDOMETER DOES NOT WORK (BUT THE OTHER METERS WORK). 54A-53
TACHOMETER DOES NOT WORK (BUT THE OTHER METERS WORK).. . . . . 54A-54
BUZZER DOES NOT WORK.. . . . . 54A-55
THE COMBINATION METER LIGHT DOES NOT ILLUMINATE NORMALLY OR THE MULTI INFORMATION DISPLAY IS NOT DISPLAYED NORMALLY. 54A-56
THE MULTI INFORMATION DISPLAY SCREEN CANNOT BE CHANGED WITH THE OPERATION OF THE METER INFORMATION SWITCH. . . . 54A-58
FUEL GAUGE DOES NOT WORK (BUT THE OTHER METERS WORK).. . . . . 54A-59
THE SEAT BELT INDICATOR LAMP DO NOT ILLUMINATE OR FLASH 54A-60
DATA LIST REFERENCE TABLE 54A-61
ACTUATOR TEST REFERENCE TABLE. . 54A-64
INSPECTION PROCEDURE FOR EACH MULTI INFORMATION DISPLAY SCREEN. 54A-64
CHECK AT ECU TERMINAL 54A-74
ON-VEHICLE SERVICE 54A-75
SPEEDOMETER CHECK. 54A-75
TACHOMETER CHECK 54A-75
FUEL GAUGE UNIT CHECK 54A-75
METER INFORMATION SWITCH CHECK. 54A-76
SETTING SERVICE REMINDER FUNCTION 54A-77
COMBINATION METER 54A-83
COMBINATION METER REMOVAL AND INSTALLATION. 54A-83
COMBINATION METER DISASSEMBLY AND REASSEMBLY 54A-84

HEADLAMP 54A-84
SERVICE SPECIFICATION(S). 54A-84
SPECIAL TOOL(S) 54A-85
SERVICE PRECAUTIONS <VEHICLES WITH DISCHARGE TYPE HEADLAMP> <vehicles with discharge type headlamp> 54A-87
TROUBLESHOOTING 54A-90
DIAGNOSIS TROUBLESHOOTING FLOW 54A-90
DIAGNOSIS FUNCTION. 54A-90
DIAGNOSIS CODE CHART 54A-90
DIAGNOSIS CODE PROCEDURES 54A-91
CODE NO. B16A2 BLOWN TURN-SIGNAL LAMP (LH) BULB 54A-91
CODE NO. B16A3 TURN-SIGNAL LAMP (LH) SHORT CIRCUIT 54A-93
CODE NO. B16A4 BLOWN TURN-SIGNAL LAMP (RH) BULB 54A-95
CODE NO. B16A5 TURN-SIGNAL LAMP (RH) SHORT CIRCUIT 54A-96
Code No. L0432 RLS RS adaptation error . 54A-98
Code No. L0434 RLS Rain sensor error . . . 54A-98
Code No. B2358 AFS OFF SW short circuit 54A-99
Code No. B2507 Steering wheel sensor error 54A-99
Code No. B2509 Steering wheel sensor not initialized 54A-100
Code No. B2511 ECU internal error (ROM) 54A-101
Code No. B2512 ECU internal error (EEPROM) 54A-102
Code No. U0001 Bus off (CAN-C). 54A-102
Code No. U0100 Engine CAN time-out 54A-103
Code No. U0121 ABS/ASC CAN time-out. . 54A-104
Code No. U0126 Steering wheel sensor CAN time-out 54A-105
Code No. U0141 ETACS CAN time-out . . . 54A-106
Code No. U1415 Coding not completed/failed 54A-107
Code No. U1417 Coding data error. 54A-107
SYMPTOM CHART 54A-108
SYMPTOM PROCEDURES 54A-109
HEADLAMPS (LOW-BEAM) DO NOT ILLUMINATE. 54A-109
HEADLAMPS (HIGH-BEAM) DO NOT ILLUMINATE. 54A-111
THE LOW-BEAM HEADLAMPS ILLUMINATE WHEN THE LIGHTING SWITCH IS AT ANY POSITIONS OTHER THAN OFF. 54A-113
HEADLAMPS DO NOT ILLUMINATE WHEN THE PASSING SWITCH IS TURNED ON. 54A-114
THE RIGHT OR LEFT HEADLAMP DOES NOT ILLUMINATE. 54A-115
HIGH-BEAM INDICATOR LAMP DOES NOT ILLUMINATE NORMALLY. 54A-116
HEADLAMP AUTOMATIC SHOUTDOWN FUNCTION DOES NOT WORK NORMALLY. 54A-117
AUTOMATIC LIGHTING FUNCTION DOES NOT WORK NORMALLY. 54A-118
ONE OF THE TAIL LAMP OR THE LICENCE PLATE LAMP DOES NOT ILLUMINATE. 54A-119
TURN-SIGNAL LAMPS DO NOT FLASH.. . 54A-121
THE COMFORT FLASHING FUNCTION DOES NOT WORK NORMALLY. 54A-122
TURN-SIGNAL LAMP INDICATOR DOES NOT

www.cargeek.ir

www.CarGeek.ir

ILLUMINATE/GO OUT NORMALLY. 54A-123
One of the bending lamps does not illuminate. 54A-123
The bending lamp illumination timing by the steering operation is failed. 54A-126
THE WELCOME LIGHT DOES NOT WORK NORMALLY. 54A-127
THE COMING-HOME LIGHT DOES NOT WORK NORMALLY. 54A-128
DATA LIST REFERENCE TABLE 54A-128
ACTUATOR TEST REFERENCE TABLE. . 54A-130
ON-VEHICLE SERVICE 54A-130
HEADLAMP AIMING. 54A-130
LUMINOUS INTENSITY MEASUREMENT 54A-132
REPLACEMENT OF REPLACEABLE BULB 54A-132
HEADLAMP AUTOMATIC-SHUTDOWN FUNCTION CHECK 54A-133
HEADLAMP AUTO LAMP FUNCTION CHECK 54A-133
AFS OPERATION TEST. 54A-133
WELCOME LIGHT FUNCTION CHECK. . . 54A-133
COMING-HOME LIGHT FUNCTION CHECK 54A-133
ADJUSTMENT FUNCTION 54A-133
HEADLAMP REMOVAL AND INSTALLATION 54A-135
HEADLAMP LEVELLING SWITCH REMOVAL AND INSTALLATION. 54A-137
LIGHTING CONTROL SENSOR REMOVAL AND INSTALLATION. 54A-138
INSPECTION 54A-139
HEADLAMP RELAY CHECK 54A-139
HEADLAMP LEVELLING SWITCH CHECK 54A-140
LIGHTING CONTROL SENSOR CHECK. . 54A-140
BRACKET REPAIR OF HEADLAMP ASSEMBLY 54A-140

HEADLAMP AUTOMATIC LEVELLING SYSTEM. 54A-143

SPECIAL TOOL(S) 54A-143
TROUBLESHOOTING 54A-145
DIAGNOSIS TROUBLESHOOTING FLOW 54A-145
DIAGNOSIS FUNCTION. 54A-145
DIAGNOSIS CODE CHART 54A-145
DIAGNOSIS CODE PROCEDURES 54A-146
Code No. B2510 Auto-levelling not initialized 54A-146
Code No. B2513 Levelling actuator output error 54A-147
Code No. B2514 Height sensor power supply error 54A-148
Code No. B2516 Rear height sensor signal error 54A-151
SYMPTOM CHART 54A-153
SYMPTOM PROCEDURES 54A-153
POWER SUPPLY CIRCUIT IS FAILED. . . . 54A-153
NEITHER RIGHT NOR LEFT AUTOMATIC LEVELLING OPERATES. 54A-154
EITHER AUTOMATIC LEVELLING DOES NOT OPERATE. 54A-155
DATA LIST REFERENCE TABLE. 54A-157
ACTUATOR TEST REFERENCE TABLE . . 54A-159
CHECK AT HEADLAMP AUTOMATIC LEVELLING-ECU TERMINAL 54A-160
ON-VEHICLE SERVICE 54A-161
HEADLAMP AUTOMATIC LEVELLING-ECU INITIALIZATION 54A-161
HEADLAMP AUTOMATIC LEVELLING OPERATION CHECK 54A-161
HEADLAMP AUTOMATIC LEVELLING MOTOR DRIVE TEST 54A-162
HEADLAMP AUTOMATIC LEVELLING-ECU REMOVAL AND INSTALLATION 54A-162
HEIGHT SENSOR REMOVAL AND INSTALLATION 54A-163
INSPECTION. 54A-164
HEIGHT SENSOR CHECK 54A-164

REAR COMBINATION LAMP 54A-165

SPECIAL TOOL(S) 54A-165
TROUBLESHOOTING 54A-168
DIAGNOSIS TROUBLESHOOTING FLOW 54A-168
DIAGNOSIS FUNCTION. 54A-168
DIAGNOSIS CODE CHART 54A-168
DIAGNOSIS CODE PROCEDURES. 54A-168
CODE NO.B16A7 TAIL LAMP (RH) CIRCUIT SHORT 54A-168
CODE NO.B16A8 TAIL LAMP (LH) CIRCUIT SHORT 54A-170
SYMPTOM CHART 54A-172
SYMPTOM PROCEDURES 54A-172
TAIL LAMPS DO NOT ILLUMINATE. 54A-172
ON-VEHICLE SERVICE 54A-173
REPLACEMENT OF REPLACEABLE BULB <LANCER SPORTBACK> 54A-173
REAR COMBINATION LAMP REMOVAL AND INSTALLATION 54A-174
TAILLAMP REMOVAL AND INSTALLATION 54A-176

www.cargeek.ir

www.CarGeek.ir

FOG LAMP 54A-177
SERVICE SPECIFICATION(S) 54A-177
SPECIAL TOOL(S) 54A-178
TROUBLESHOOTING 54A-181
DIAGNOSIS TROUBLESHOOTING FLOW 54A-181
SYMPTOM CHART 54A-181
SYMPTOM PROCEDURES 54A-182
FRONT FOG LAMPS DO NOT ILLUMINATE NORMALLY 54A-182
THE RIGHT OR LEFT FOG LAMP DOES NOT ILLUMINATE 54A-186
FOG LAMP INDICATOR DOES NOT ILLUMINATE/GO OUT NORMALLY 54A-188
REAR FOG LAMPS DO NOT ILLUMINATE NORMALLY 54A-189
REAR FOG LAMP INDICATOR DOES NOT ILLUMINATE/GO OUT NORMALLY 54A-191
ON-VEHICLE SERVICE 54A-192
FRONT FOG LAMP AIMING 54A-192
REPLACEMENT OF REPLACEABLE BULB 54A-192
FRONT FOG LAMP REMOVAL AND INSTALLATION 54A-193
REAR FOG LAMP REMOVAL AND INSTALLATION 54A-195
INSPECTION 54A-196
FRONT FOG LAMP RELAY CHECK 54A-196

SIDE TURN-SIGNAL LAMP 54A-197
SIDE TURN-SIGNAL LAMP REMOVAL AND INSTALLATION 54A-197

INTERIOR LAMP 54A-199
SPECIAL TOOL(S) 54A-199
TROUBLESHOOTING 54A-201
DIAGNOSIS TROUBLESHOOTING FLOW 54A-201
SYMPTOM CHART 54A-201
SYMPTOM PROCEDURES 54A-202
FRONT ROOM LAMP DOES NOT ILLUMINATE NORMALLY 54A-202
REAR ROOM LAMP DOES NOT ILLUMINATE NORMALLY 54A-205
LUGGAGE COMPARTMENT LAMP DOES NOT ILLUMINATE NORMALLY 54A-206
THE ROOM LAMP AUTO-CUT FUNCTION DOES NOT OPERATE CORRECTLY 54A-208
ON-VEHICLE SERVICE 54A-209
ADJUSTMENT FUNCTION 54A-209
ROOM LAMP REMOVAL AND INSTALLATION 54A-210
LUGGAGE COMPARTMENT LAMP REMOVAL AND INSTALLATION 54A-211

HIGH-MOUNTED STOP LAMP 54A-213
HIGH-MOUNTED STOP LAMP REMOVAL AND INSTALLATION 54A-213

LICENCE PLATE LAMP 54A-214
LICENCE PLATE LAMP REMOVAL AND INSTALLATION 54A-214

HAZARD WARNING LAMP SWITCH 54A-216
SPECIAL TOOL(S) 54A-216
TROUBLESHOOTING 54A-218
DIAGNOSIS TROUBLESHOOTING FLOW 54A-218
DIAGNOSIS FUNCTION 54A-218
DIAGNOSIS CODE CHART 54A-218
DIAGNOSIS CODE PROCEDURES 54A-218
CODE NO.B16A6 BLOWN HAZARD WARNING LAMP FUSE 54A-218
SYMPTOM CHART 54A-219
SYMPTOM PROCEDURES 54A-219
HAZARD WARNING LAMPS DO NOT FLASH. 54A-219
THE ESS FUNCTION DOES NOT WORK NORMALLY 54A-219
HAZARD WARNING LAMP SWITCH REMOVAL AND INSTALLATION 54A-220
INSPECTION 54A-220
HAZARD WARNING LAMP SWITCH CHECK 54A-220

HORN 54A-220
HORN REMOVAL AND INSTALLATION . . 54A-220
INSPECTION 54A-221
HORN RELAY CHECK 54A-221

REVERSING SENSOR SYSTEM 54A-222
SPECIAL TOOL(S) 54A-222
TROUBLESHOOTING 54A-224
DIAGNOSIS TROUBLESHOOTING FLOW 54A-224
DIAGNOSIS FUNCTION 54A-224
DIAGNOSIS CODE CHART 54A-224
DIAGNOSIS CODE PROCEDURES 54A-225
CODE No. B252E Sensor wire disconnection 54A-225
CODE No. B252F Sensor error 54A-228
CODE No. U0001 Bus off (CAN-C) 54A-230
CODE No. U0100 ENGINE-ECU TIMEOUT 54A-231

www.cargeek.ir

www.CarGeek.ir

CODE No. U0121 ABS/ASC-ECU TIMEOUT 54A-232
CODE No. U0141 ETACS-ECU TIMEOUT. 54A-233
SYMPTOM CHART. 54A-234
SYMPTOM PROCEDURES 54A-235
THE REVERSING SENSOR SYSTEM DOES NOT OPERATE. 54A-235
SYSTEM CANNOT BE ACTIVATED OR DEACTIVATED EVEN IF CORNER SENSOR SWITCH IS PRESSED. 54A-237
THE REVERSING SENSOR OFF INDICATOR LAMP DOES NOT ILLUMINATE. 54A-239
EITHER OF REVERSING SENSOR (CORNER SENSOR AND BACK SENSOR) DOES NOT DETECT THE OBSTACLE. 54A-240
OBSTACLE IS NOT DETECTED EVEN WHEN THE SELECTOR LEVER IS SHIFTED TO "R"(REVERSE) POSITION. 54A-241
CHECK AT CORNER SENSOR ECU TERMINAL 54A-243
CORNER SENSOR REMOVAL AND INSTALLATION 54A-245
CORNER SENSOR SWITCH REMOVAL AND INSTALLATION. 54A-247
CORNER SENSOR ECU REMOVAL AND INSTALLATION. 54A-247
INSPECTION 54A-248
CORNER SENSOR SWITCH INSPECTION 54A-248

REAR VIEW CAMERA. 54A-248
GENERAL INFORMATION. 54A-248
SPECIAL TOOL(S) 54A-250
TROUBLESHOOTING 54A-252
DIAGNOSIS TROUBLESHOOTING FLOW 54A-252
SYMPTOM CHART. 54A-252
SYMPTOM PROCEDURES 54A-253
REAR VIEW CAMERA IMAGE IS NOT CORRECTLY DISPLAYED. <VEHICLES WITH MMCS> . 54A-253
REAR VIEW CAMERA IMAGE IS NOT CORRECTLY DISPLAYED. <VEHICLES WITHOUT MMCS> 54A-260
ON-VEHICLE SERVICE 54A-267
CAMERA SETTING 54A-267
REAR VIEW CAMERA REMOVAL AND INSTALLATION. 54A-267

ACCESSORY SOCKET AND CIGARETTE LIGHTER 54A-269
SPECIAL TOOLS 54A-269
TROUBLESHOOTING 54A-271
DIAGNOSIS TROUBLESHOOTING FLOW 54A-271
SYMPTOM CHART 54A-271
SYMPTOM PROCEDURES 54A-272
THE ACCESSORY SOCKET DOES NOT OPERATE. 54A-272
THE CIGARETTE LIGHTER DOES NOT OPERATE 54A-275
ACCESSORY SOCKET AND CIGARETTE LIGHTER REMOVAL AND INSTALLATION 54A-277
INSPECTION <VEHICLES WITH CIGAR LIGHTER> 54A-279

COLUMN SWITCH 54A-280
SPECIAL TOOL(S) 54A-280
TROUBLESHOOTING 54A-282
DIAGNOSIS TROUBLESHOOTING FLOW 54A-282
DIAGNOSIS FUNCTION 54A-282
DIAGNOSIS CODE CHART 54A-282
DIAGNOSIS CODE PROCEDURES. 54A-282
CODE NO.B2350 MALFUNCTION OF THE LIGHTING SWITCH 54A-282
COLUMN SWITCH REMOVAL AND INSTALLATION 54A-283
INSPECTION. 54A-285
WIPER SWITCH CONTINUITY CHECK <LANCER> 54A-285
WIPER SWITCH CONTINUITY CHECK <LANCER SPORTBACK> 54A-285
COLUMN SWITCH (SWITCH BODY) CONTINUITY CHECK 54A-286

RADIO AND CD PLAYER 54A-287
SPECIAL TOOL(S) 54A-287
TROUBLESHOOTING 54A-289
AUDIO ERROR CODE 54A-289
TROUBLESHOOTING STRATEGY 54A-290
DIAGNOSIS FUNCTION 54A-290
DIAGNOSIS CODE CHART 54A-291
DIAGNOSIS CODE PROCEDURES. 54A-291
CODE No.U0019 BUS OFF (CAN-B) 54A-291
CODE No.U0141 ETACS-ECU CAN TIMEOUT 54A-292
CODE No.U0151 SRS-ECU CAN TIMEOUT 54A-293
CODE No.U0155 COMBINATION METER CAN TIMEOUT 54A-294
CODE No.U0164 A/C-ECU CAN TIMEOUT 54A-295
CODE No.U0168 WCM OR KOS-ECU CAN TIMEOUT 54A-296
CODE NO.U1415 CODING NOT COMPLETED/DATA

www.cargeek.ir

www.CarGeek.ir

FAIL 54A-297
CODE NO.B2420 MALFUNCTION OF THE POWER SUPPLY CIRCUIT 54A-298
CODE NO.B2421 MALFUNCTION OF THE RADIO TUNER 54A-298
CODE No.B2423 6CD PLAYER ERROR . . 54A-299
CODE No.B2424 CD PLAYER ERROR . . . 54A-300
CODE NO.B2450 COMMUNICATION ERROR OF THE SWITCH PANEL. 54A-300
CODE NO.B2451 PANEL TYPE ERROR. . 54A-301
SYMPTOM CHART. 54A-302
SYMPTOM PROCEDURES 54A-303
WHEN POWER SWITCH IS TURNED "ON," NO POWER IS AVAILABLE <Vehicles without Auto Stop & Go System> 54A-303
WHEN POWER SWITCH IS TURNED "ON," NO POWER IS AVAILABLE <Vehicles with Auto Stop & Go System> 54A-306
NO SOUND. <vehicles without audio amplifier> 54A-310
NO SOUND. <vehicles with audio amplifier> 54A-313
NO SOUND FROM ONE SPEAKER. <vehicles without audio amplifier>. 54A-319
NO SOUND FROM ONE SPEAKER. <vehicles with audio amplifier>. 54A-322
THE AUDIO DOES NOT OPERATE NORMALLY BY OPERATING THE AUDIO CONTROL UNIT OF THE CENTRE PANEL UNIT. <Vehicles without Auto Stop & Go (AS) System> 54A-327
THE AUDIO DOES NOT OPERATE NORMALLY BY OPERATING THE AUDIO CONTROL UNIT OF THE CENTRE PANEL UNIT. <Vehicles with Auto Stop & Go (AS) System> 54A-331
AUDIO ILLUMINATION DOES NOT WORK NORMALLY. 54A-335
THE SOUND OF EXTERNAL INPUT IS NOT PLAYED. 54A-338
TROUBLESHOOTING FOR NOISE 54A-340
ON-VEHICLE SERVICE 54A-341
ADJUSTMENT OF VOLUME AND SOUND QUALITY AUTOMATIC CORRECTION FUNCTION <VEHICLES WITHOUT RADIO AND TAPE PLAYER>. . 54A-341
DATA LIST REFERENCE TABLE 54A-342
RADIO WITH CD PLAYER REMOVAL AND INSTALLATION. 54A-343
INSPECTION 54A-344
AUDIO ADAPTER INSPECTION 54A-344

MITSUBISHI MULTI COMMUNICATION SYSTEM (MMCS). 54A-345

SPECIAL TOOL(S) 54A-345
TROUBLESHOOTING 54A-347
TROUBLESHOOTING STRATEGY 54A-347
DIAGNOSIS FUNCTION <VEHICLES FOR RUSSIA> 54A-347
PRECAUTIONS DURING MMCS SERVICE 54A-347
ERROR MESSAGE. 54A-348
SERVICE MODE 54A-352
DIAGNOSIS CODE CHART <VEHICLES FOR RUSSIA> 54A-363
DIAGNOSIS CODE PROCEDURES <VEHICLES FOR RUSSIA> 54A-363
CODE No.B2226 NAVIGATION UNIT SERVICE DATA 54A-363
CODE No.B2240 COMMUNICATION ERROR BETWEEN CAN BOX AND NAVIGATION UNIT 54A-364
CODE No.B2477 VIN WRITING HAS NEVER BEEN COMPLETED. 54A-366
CODE No.U0019 BUS OFF 54A-366
CODE No.U0141 TIME-OUT DURING CAN COMMUNICATION WITH ETACS-ECU . . . 54A-367
CODE No.U0151 TIME-OUT DURING CAN COMMUNICATION WITH SRS-ECU 54A-368
CODE No.U0155 TIME-OUT DURING CAN COMMUNICATION WITH COMBINATION METER 54A-369
CODE No.U0164 TIME-OUT DURING CAN COMMUNICATION WITH A/C-ECU 54A-370
CODE No.U0168 TIME-OUT DURING CAN COMMUNICATION WITH WCM 54A-371
CODE No.U1415 CODING DATA NOT WRITTEN 54A-372
CODE No.U1417 IMPLAUSIBLE CODING DATA 54A-372
SYMPTOM CHART 54A-373
SYMPTOM PROCEDURES 54A-374
THE NAVIGATION SCREEN IS NOT DISPLAYED AT ALL. <VEHICLES WITHOUT AUTO STOP & GO SYSTEM> 54A-374
THE NAVIGATION SCREEN IS NOT DISPLAYED AT ALL. <VEHICLES WITH AUTO STOP & GO SYSTEM> 54A-377
NO SOUND IS HEARD. <vehicles without audio amplifier> 54A-380
NO SOUND IS HEARD. <vehicles with audio amplifier> 54A-383
NO SOUND IS HEARD FROM ONE OF THE SPEAKERS. <Except vehicles for RUSSIA (without amplifier)> 54A-388
NO SOUND IS HEARD FROM ONE OF THE SPEAKERS. <Vehicles for RUSSIA (without amplifier)>

www.cargeek.ir

www.CarGeek.ir

. . . . . 54A-390

NO SOUND IS HEARD FROM ONE OF THE SPEAKERS. <Except vehicles for RUSSIA (with amplifier)> 54A-393

NO SOUND IS HEARD FROM ONE OF THE SPEAKERS. <Vehicles for RUSSIA (with amplifier)> 54A-397

THE MENU OPERATION IS POSSIBLE EVEN DURING DRIVING. 54A-401

THE SCREEN IS NOT NORMAL IN THE NAVIGATION MODE. <EXCEPT VEHICLES FOR RUSSIA> 54A-403

THE SCREEN IS NOT NORMAL IN THE NAVIGATION MODE. <VEHICLES FOR RUSSIA> 54A-405

POOR RECEPTION. 54A-408

GPS CANNOT BE RECEIVED. <EXCEPT VEHICLES FOR RUSSIA> 54A-409

GPS CANNOT BE RECEIVED. <VEHICLES FOR RUSSIA>. 54A-410

DVD (VIDEO DISK) CANNOT BE PLAYED. 54A-411

IMAGE OF A DVD (VIDEO DISK) IS PLAYED, BUT NO SOUND IS PLAYED. 54A-413

SOUND OF A DVD (VIDEO DISK) CAN BE PLAYED, BUT NO IMAGE IS PLAYED. 54A-414

THE PICTURE AND SOUND OF EXTERNAL INPUT ARE NOT PLAYED. 54A-415

CHECK THE CAN BOX UNIT POWER SUPPLY CIRCUIT. <VEHICLES FOR RUSSIA>. . . . 54A-416

ETACS CUSTOMISATION FUNCTION <VEHICLES FOR RUSSIA> 54A-418

MAIN UNIT TERMINAL VOLTAGE. 54A-421

MITSUBISHI MULTI COMMUNICATION SYSTEM (MMCS) REMOVAL AND INSTALLATION. 54A-423

INSPECTION 54A-425

AUDIO AND VIDEO ADAPTER 54A-425

STEERING WHEEL AUDIO REMOTE CONTROL SWITCH. 54A-426

SPECIAL TOOL(S) 54A-426

TROUBLESHOOTING 54A-289

TROUBLESHOOTING STRATEGY 54A-428

SYMPTOM CHART. 54A-428

SYMPTOM PROCEDURES 54A-303

STEERING WHEEL AUDIO REMOTE CONTROL SWITCH DOES NOT FUNCTION. <VEHICELES WITH RADIO AND CD PLAYER>. 54A-429

STEERING WHEEL AUDIO REMOTE CONTROL SWITCH DOES NOT FUNCTION. <VEHICLES WITH MMCS> 54A-432

STEERING WHEEL AUDIO REMOTE CONTROL SWITCH ILLUMINATION DOES NOT COME ON. 54A-434

DATA LIST REFERENCE TABLE. 54A-436

STEERING WHEEL AUDIO REMOTE CONTROL SWITCH REMOVAL AND INSTALLATION. 54A-436

STEERING WHEEL AUDIO REMOTE CONTROL SWITCH INSPECTION 54A-437

USB BOX 54A-438

SPECIAL TOOL(S) 54A-438

TROUBLESHOOTING 54A-438

DIAGNOSIS TROUBLESHOOTING FLOW 54A-438

DIAGNOSIS MODE <VEHICLES WITH RADIO AND CD PLAYER> 54A-438

DIAGNOSIS MODE <VEHICLES WITH MMCS> 54A-440

CHECK CHART FOR TROUBLE SYMPTOMS 54A-440

SYMPTOM PROCEDURES 54A-441

THE USB ADAPTER DATA CONNOT BE REPLAYED. <VEHICLES WITH RADIO AND CD PLAYER> 54A-441

THE USB ADAPTER DATA CONNOT BE REPLAYED. <VEHICLES WITH MMCS> 54A-443

USB ADAPTER REMOVAL AND INSTALLATION 54A-445

USB BOX REMOVAL AND INSTALLATION 54A-445

USB ADAPTER INSPECTION 54A-445

HANDS FREE ECU. 54A-447

SPECIAL TOOL(S) 54A-447

TROUBLESHOOTING 54A-449

INTRODUCTION. 54A-449

STANDARD FLOW OF DIAGNOSTIC TROUBLESHOOTING 54A-451

DIAGNOSIS MODE <VEHICLES WITH RADIO AND CD PLAYER> 54A-451

DIAGNOSIS MODE <VEHICLES WITH MMCS> 54A-453

SYMPTOM CHART 54A-456

SYMPTOM PROCEDURES 54A-457

CHECK THE HANDS-FREE-ECU POWER SUPPLY CIRCUIT. <VEHICLES WITH RADIO AND CD PLAYER WITHOUT AS>. 54A-457

CHECK THE HANDS-FREE-ECU POWER SUPPLY CIRCUIT. <VEHICLES WITH MMCS> 54A-459

USB ADAPTER DATA CANNOT BE REPLAYED. <VEHICLES WITH RADIO AND CD PLYER> 54A-461

USB ADAPTER DATA CANNOT BE REPLAYED. <VEHICLES WITH MMCS> 54A-462

www.cargeek.ir

www.CarGeek.ir

WHEN THE SPEECH SWITCH IS PRESSED, THE VOICE INFORMATION IS OUTPUT, BUT THE VOICE RECOGNITION IS NOT PERFORMED. . . . 54A-464
WHEN THE SPEECH SWITCH ISPRESSED, THE VOICE INFORMATION ISNOT OUTPUT. <VEHICLES WITH RADIO AND CD PLAYER> 54A-466
WHEN THE SPEECH SWITCH ISPRESSED, THE VOICE INFORMATION ISNOT OUTPUT. <VEHICLES WITH MMCS>. 54A-469
DIAGNOSIS MODE CANNOT BE MADE AN ENTRY. <VEHICLES WITH RADIO AND CD PLAYER> 54A-471
DIAGNOSIS MODE CANNOT BE MADE AN ENTRY. <VEHICLES WITH MMCS> 54A-473
STEERING WHEEL VOICE-CONTROL SWITCH ILLUMINATION DOES NOT COME ON. . . 54A-475
VOICE GUIDE "Unable to obtain vehicle speed. Please try again or contact your dealer for service" IS SENT FROM THE SPEAKER. <VEHICLES WITH RADIO AND CD PLAYER>. 54A-477
VOICE GUIDE "Unable to obtain vehicle speed. Please try again or contact your dealer for service" IS SENT FROM THE SPEAKER. <VEHICLES WITH MMCS> 54A-478
ON-VEHICLE SERVICE 54A-478
PAIRING THE BLUETOOTH DEVICE 54A-478
PAIRING THE BLUETOOTH DEVICE <VEHICLES WITH MMCS AND EXCEPT VEHICLES FOR RUSSIA>. 54A-480
PAIRING THE BLUETOOTH DEVICE <VEHICLES WITH MMCS VEHICLES FOR RUSSIA> . . 54A-482
ERASE THE PASSWORD 54A-486
HANDS FREE ECU REMOVAL AND INSTALLATION 54A-486
MICROPHONE UNIT REMOVAL AND INSTALLATION 54A-486
STEERING WHEEL VOICE CONTROL SWITCH REMOVAL AND INSTALLATION 54A-487
USB ADAPTER REMOVAL AND INSTALLATION 54A-487
INSPECTION 54A-488
STEERING WHEEL VOICE CONTROL SWITCH INSPECTION 54A-488
USB ADAPTER INSPECTION 54A-488

AMPLIFIER 54A-490
AMPLIFIER REMOVAL AND INSTALLATION 54A-490

SPEAKER 54A-490
ON-VEHICLE SERVICE 54A-490
SPEAKER TEST <vehicles with radio and CD player> 54A-490
SPEAKER TEST <Vehicles with MMCS> . . 54A-491
SPEAKER REMOVAL AND INSTALLATION 54A-492

ANTENNA 54A-496
ANTENNA REMOVAL AND INSTALLATION 54A-496

DC/DC CONVERTER <VEHICLES WITH AUTO STOP & GO (AS&G) SYSTEM>. 54A-498
SPECIAL TOOL(S) 54A-498
TROUBLESHOOTING 54A-500
DIAGNOSIS TROUBLESHOOTING FLOW 54A-500
SYMPTOM CHART 54A-500
SYMPTOM PROCEDURES 54A-500
CHECK THE DC/DC CONVERTER POWER SUPPLY CIRCUIT. 54A-500
AUDIO EQUIPMENT IS RESET OR SOUND JUMP OCCURS AT AUTO START. 54A-502
DC/DC CONVERTER REMOVAL AND INSTALLATION 54A-503
INSPECTION. 54A-503
DC/DC CONVERTER INSPECTION. 54A-503

DEFOGGER 54A-505
SPECIAL TOOL(S) 54A-505
TROUBLESHOOTING 54A-507
DIAGNOSIS TROUBLESHOOTING FLOW 54A-507
SYMPTOM CHART 54A-507
SYMPTOM PROCEDURES 54A-508
REAR WINDOW DEFOGGER DOES NOT OPERATE 54A-508
DEFOGGER SWITCH REMOVAL AND INSTALLATION 54A-513
ON-VEHICLE SERVICE 54A-513
PRINTED-HEATER LINE CHECK. 54A-513
DEFOGGER RELAY CHECK 54A-514

ETACS 54A-515
SPECIAL TOOL(S) 54A-515
TROUBLESHOOTING 54A-517
DIAGNOSIS TROUBLESHOOTING FLOW 54A-517
DIAGNOSIS FUNCTION 54A-517
DIAGNOSIS CODE CHART 54A-518
DIAGNOSIS CODE PROCEDURES. 54A-520
CODE No.U0019, U0001 BUS OFF 54A-520
CODE No.U0100 ENGINE-ECU TIMEOUT 54A-520
CODE No.U0101 CVT-ECU TIMEOUT. . . . 54A-521

www.cargeek.ir

www.CarGeek.ir

CODE No.U0121 ABS/ASC-ECU TIMEOUT 54A-522
CODE No.U0126 SAS TIMEOUT 54A-523
CODE No.U0131 EPS-ECU TIMEOUT . . . 54A-524
CODE No.U0151 SRS-ECU TIMEOUT . . . 54A-525
CODE No.U0155 COMBINATION METER TIMEOUT 54A-526
CODE No.U0164 A/C-ECU TIMEOUT 54A-527
CODE No.U0168 WCM TIMEOUT 54A-528
CODE No. U0181 HEADLAMP AUTOMATIC LEVELLING-ECU TIMEOUT. 54A-529
CODE No.U0184 AUDIO UNIT TIMEOUT . 54A-530
CODE No.U0245 AUDIO VISUAL NAVIGATION TIMEOUT 54A-531
CODE NO.U0331 ECU INTERNAL ERROR 54A-532
CODE No. U1004 AS TIMEOUT. 54A-533
CODE No. U1005 CORNER SENEOR-ECU TIMEOUT 54A-534
CODE No.U1108 ADDITIONAL CAN-B ECU DETECTED. 54A-535
CODE No.U1120, U1121 BUS LINE (CAN-C) LOW OR HIGH INPUT 54A-535
CODE NO.B1761 CHASSIS NO. NOT PROGRAMMED 54A-536
CODE No.B210A, B210B +B POWER SUPPLY (LOW), (HIGH). 54A-536
CODE NO.B2206 CHASSIS NO. MISMATCH 54A-538
CODE NO.B2215 ECU INTERNAL ERROR 54A-539
CODE NO.B222C CODING NOT COMPLETED 54A-539
CODE No.B2353, B2354 IG1 POWER SUPPLY (LOW), (HIGH) 54A-540
DATA LIST REFERENCE TABLE 54A-541
SYMPTOM CHART. 54A-548
SYMPTOM PROCEDURES 54A-548
CHECK THE CIRCUIT (POWER SUPPLY LINE) FROM BATTERY 54A-548
INPUT SIGNAL CHART 54A-550
INPUT SIGNAL PROCEDURES. 54A-551
THE IGNITION SWITCH (ACC) SIGNAL IS NOT SENT TO THE ETACS-ECU. 54A-551
THE IGNITION SWTICH (IG1) SIGNAL IS NOT SENT TO THE ETACS-ECU. 54A-552
THE KEY REMINDER SWITCH SIGNAL IS NOT SENT TO THE ETACS-ECU. 54A-554
THE DRIVER'S DOOR LOCK ACTUATOR SWITCH SIGNAL IS NOT SENT TO THE ETACS-ECU. <LH DRIVE VEHICLES> 54A-556
THE DRIVER'S DOOR LOCK ACTUATOR SWITCH SIGNAL IS NOT SENT TO THE ETACS-ECU. <RH DRIVE VEHICLES>. 54A-558
THE FRONT DOOR SWITCH (LH) SIGNAL IS NOT SENT TO THE ETACS-ECU. 54A-560
THE FRONT DOOR SWITCH (RH) SIGNAL IS NOT SENT TO THE ETACS-ECU. 54A-562
THE REAR DOOR SWITCH (RH) SIGNAL IS NOT SENT TO THE ETACS-ECU. 54A-564
THE REAR DOOR SWITCH (LH) SIGNAL IS NOT SENT TO THE ETACS-ECU. 54A-566
THE TRUNK LID ACTUATOR AND SWITCH SIGNAL IS NOT SENT TO THE ETACS-ECU. <LANCER> 54A-568
THE TALE GATE LATCH SWITCH SIGNAL IS NOT SENT TO THE ETACS-ECU. <LANCER SPORTBACK> 54A-570
THE HAZARD WARNING LAMP SWITCH SIGNAL IS NOT SENT TO THE ETACS-ECU. 54A-572
THE COLUMN SWITCH SIGNAL IS NOT SENT TO THE ETACS-ECU.. . . . . 54A-574
THE HOOD LATCH SWITCH SIGNAL IS NOT SENT TO THE ETACS-ECU.. . . . . 54A-574
THE STOP LAMP SWITCH SIGNAL IS NOT SENT TO THE ETACS-ECU.. . . . . 54A-576
CHECK AT ECU TERMINAL. 54A-577
ON-VEHICLE SERVICE 54A-583
ADJUSTMENT FUNCTION. 54A-583
ETACS-ECU 54A-588
ETACS-ECU REMOVAL AND INSTALLATION 54A-588

SECURITY ALARM 54A-590

SPECIAL TOOL(S) 54A-590
TROUBLESHOOTING 54A-593
DIAGNOSIS TROUBLESHOOTING FLOW 54A-593
DIAGNOSIS FUNCTION 54A-593
DIAGNOSIS CODE CHART 54A-593
DIAGNOSIS CODE PROCEDURES. 54A-593
DIAGNOSIS CODE NO.B120A Security alarm siren error 54A-593
DIAGNOSIS CODE NO.B120B Security alarm sensor error 54A-594
DIAGNOSIS CODE NO.B120C Security alarm siren Flat Battery 54A-595
SYMPTOM CHART 54A-596
SYMPTOM PROCEDURES 54A-597
SECURITY-ALARM SYSTEM IS NOT ARMED (SECURITY-ALARM INDICATOR LIGHT DOES NOT ILLUMINATE). 54A-597
THE INTERIOR ALARM DOES NOT WORK WHILE

www.cargeek.ir

www.CarGeek.ir

THE SECURITY-ALARM SYSTEM IS TRIGGERED. 54A-600
THE HAZARD WARNING LAMPS DO NOT FLASH WHILE THE SECURITY-ALARM SYSTEM IS TRIGGERED. 54A-601
THE HORNS DO NOT SOUND WHEN THE SECURITY-ALARM SYSTEM IS TRIGGERED. 54A-602
THE ACTIVATED SECURITY ALARM SIREN SOUNDS EVEN THOUGH NO FAULTY OPERATION IS MADE. 54A-605
SECURITY ALARM SIREN DOES NOT SOUND. 54A-607
ON-VEHICLE SERVICE 54A-607
ADJUSTMENT FUNCTION. 54A-607
LIN CUTOFF CONTROL UNIT REMOVAL AND INSTALLATION 54A-608
SECURITY ALARM SENSOR REMOVAL AND INSTALLATION 54A-609
SECURITY ALARM SIREN REMOVAL AND INSTALLATION 54A-610
INSPECTION. 54A-611
LIN CUTOFF CONTROL UNIT INSPECTION 54A-611
THEFT ALARM INDICATOR INSPECTION 54A-611

www.cargeek.ir

www.cargeek.ir

www.CarGeek.ir

BATTERY

SERVICE SPECIFICATIONS

M1541000300919

Item	Standard value	
Battery electrolyte specific gravity	1.220 – 1.290 (electrolyte temperature 20°C)	
Battery current sensor resistance	Current sensor resistance value	between terminal No.1 – 3: 3 – 10 kΩ
		between terminal No.1 – 4: less than 0.5 kΩ
		between terminal No.3 – 4: 3 – 10 kΩ
	Temperature sensor resistance value	4.5 – 7.2 kΩ (when 0 °C)
		1.6 – 2.5 kΩ (when 25 °C)
		0.96 – 1.40 kΩ (when 40 °C)

ON-VEHICLE SERVICE

FLUID LEVEL AND SPECIFIC GRAVITY CHECK

M1541000900427

⚠ CAUTION

- **If the battery is used with the electrolyte level below the LOWER LEVEL indicator, there is the danger that explosions may occur, so add water to the battery until the electrolyte level is between the LOWER LEVEL and UPPER LEVEL indications.**
- **If too much water is added to make the level rise above the UPPER LEVEL indication, the electrolyte may leak out, so adjust so that the electrolyte level is between the LOWER LEVEL and UPPER LEVEL indications.**

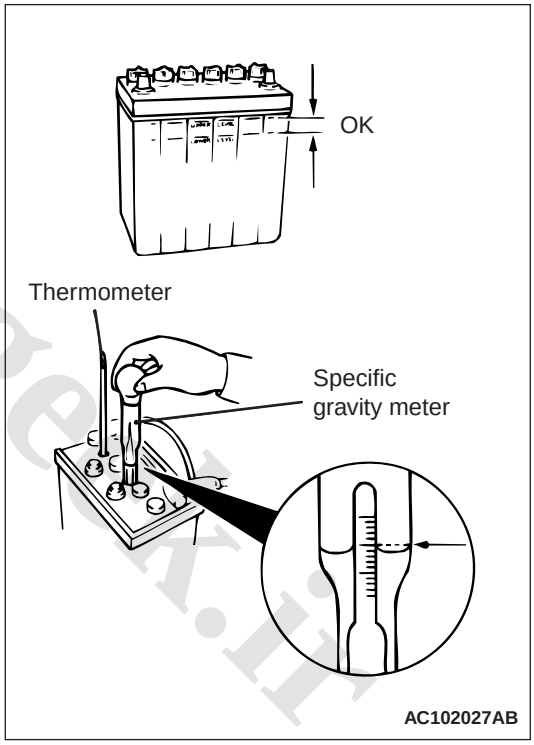

1. Check that the battery electrolyte level is between the UPPER LEVEL and LOWER LEVEL indications.
2. Use a specific gravity meter and a thermometer to measure the specific gravity.

   Standard value: 1.220 – 1.290 (electrolyte temperature 20°C)

www.cargeek.ir

www.CarGeek.ir

The specific gravity of the battery electrolyte changes according to the temperature, so the specific gravity when the electrolyte is at a temperature of 20°C can be calculated using the following formula. Use the converted value to judge whether the electrolyte is okay or not.

D_{20} = (t − 20) × 0.0007 + Dt

D_{20}: Specific gravity converted to a value for electrolyte temperature of 20°C

t: Electrolyte temperature at the time of measurement

Dt: Actual specific gravity

CHARGING

M1541001102130

⚠ CAUTION

- **The battery plugs should be removed during charging.**
- **The battery electrolyte level may rise and overflow from the battery during charging.**
- **Explosions may occur if the battery is brought close to naked flames during charging.**
- **Be careful to avoid tasks that might produce sparks or other danger while the battery is charging.**
- **After charging is complete, reinstall the battery plugs, pour water over the battery to rinse away any sulphuric acid, and let the battery stand to dry.**
- **Charge the battery in a well-ventilated location.**
- **Do not let the battery electrolyte temperature rise above approximately 45°C (approximately 55°C during rapid charging).**

Remove the battery from the vehicle.

1. The normal charging current is a value in amperes which is 1/10th of the battery capacity. If the battery needs to be charged rapidly because of reasons such as time limitations, the maximum charging current for rapid charging is the battery capacity expressed as an ampere value.

Battery type	Capacity (5-hour rate)	Normal charging current	Rapid charging current
75D23L	53 Ah	5.3 A	53 A
55D23L	50 Ah	5.0 A	50 A
Q-85	55 Ah	5.5 A	55 A
T-105	73 Ah	7.3 A	73 A

Determine when charging is finished.
When the specific gravity of the battery electrolyte is constantly within 1.220 – 1.290 for a continuous period of one hour or more.

BATTERY TEST

M1541001202256

TEST STEPS

STEP 1. Battery no-load voltage check
(1) Illuminate the headlamp for 15 seconds.
(2) Turn off the headlamp and then leave it for about 2 minutes to stabilise the battery voltage.
(3) Remove the battery cable.
(4) Measure the battery no-load voltage.

OK: 12.4 V or more (Specific gravity 1.240)

Q: Does the measured voltage correspond with this range?
YES : Go to Step 3.
NO : Go to Step 2.

STEP 2. Battery charging
Recharge the battery at 5A (constant-current charging). (Refer to Table 1.)

Q: Is the battery no-load voltage normal value (12.4 V or more)?
YES : Go to Step 3.
NO : Replace the battery.

STEP 3. Load test check
(1) Connect the battery tester to battery.
(2) Feed a load current through the battery. (Refer to Table 1).
(3) Measure the battery voltage after 15 seconds and then eliminate a load current.
(4) Compare the measured voltage to the specified lowest voltage. (Refer to Table 2).

Q: Is the measured voltage higher than the lowest voltage?
YES : The battery is normal.
NO : Replace the battery.

www.cargeek.ir

www.CarGeek.ir

(TABLE 1)

Battery type	**Charging time when fully discharged [5A constant current charging] (H)**	**Load current (A)**
55D23L	12	200
75D23L	13	270
Q-85	14	310
T-105	18	410

(TABLE 2)

Outside air temperature (°C)	21 or more	16 to 20	10 to 15	4 to 9	–1 to 3	–7 to –2	–12 to –8	–18 to –13
Minimum voltage (V)	9.6	9.5	9.4	9.3	9.1	8.9	8.7	8.5

www.cargeek.ir

www.cargeek.ir

www.CarGeek.ir

REMOVAL AND INSTALLATION

M1541001301506

<1600, 1800-PETROL, 2000>

⚠ CAUTION

If the battery current sensor or engine-ECU is replaced, make the battery current sensor learn the zero point. (Refer to GROUP 00, Precautions Before Service – Battery Current Sensor Calibration.) <Low CO_2 specification, FFV>

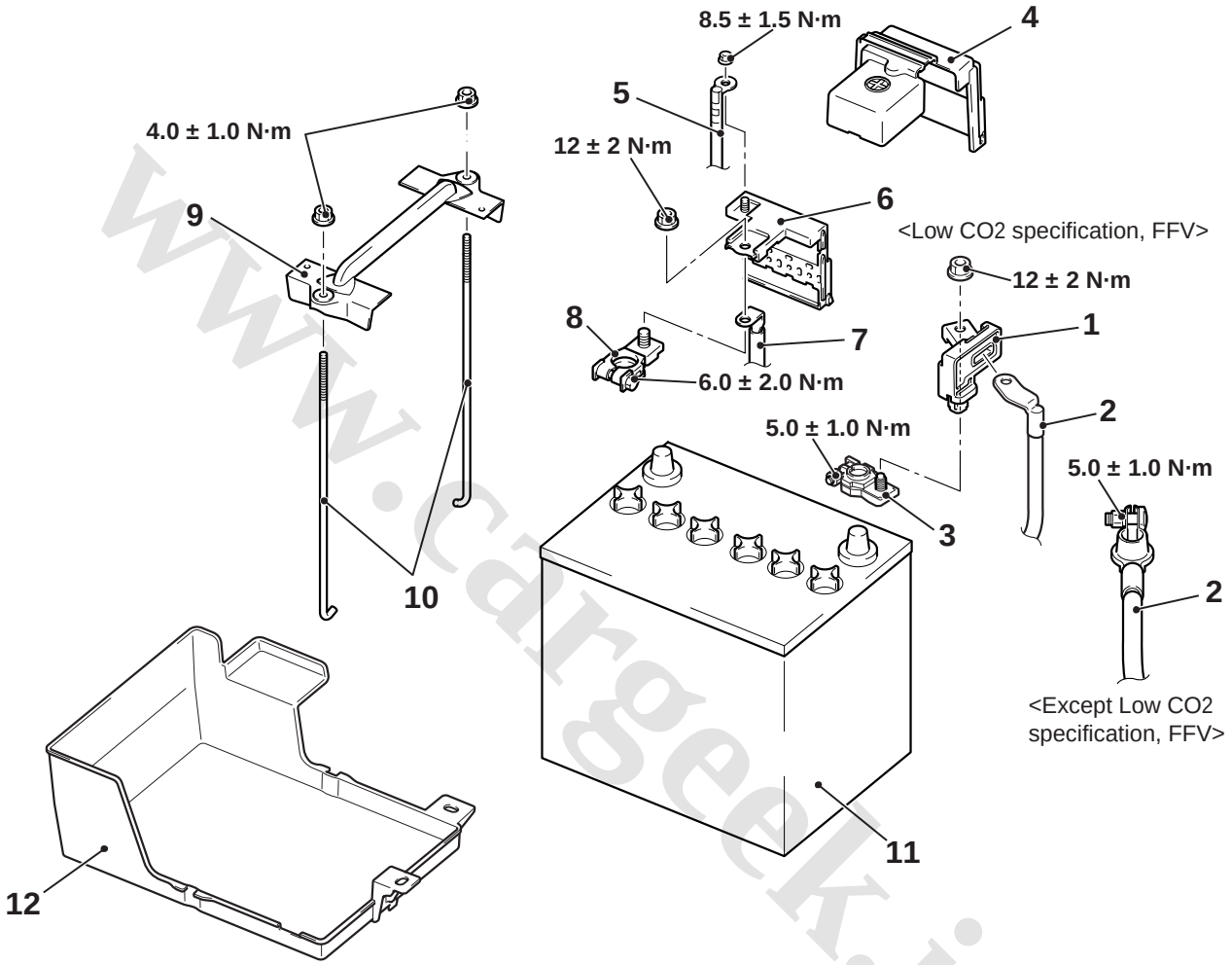

ACB01849AB

Removal steps

1. Battery current sensor <Low CO_2 specification, FFV>
2. Connection of the battery harness [negative battery terminal]
3. Battery terminal assembly [negative battery terminal] <Low CO_2 specification, FFV>
- Air cleaner intake duct (Refer to GROUP 15 – Air Cleaner <1800-PETROL, 2000> or <1600>).
4. Fusible link box cover

Removal steps (Continued)

5. Connection of the battery harness [positive battery terminal]
6. Connection of the fusible link box
7. Connection of the battery harness [positive battery terminal]
8. Battery terminal assembly [positive battery terminal]
9. Battery holder
10. Battery bolt
11. Battery
12. Battery tray

www.cargeek.ir

www.CarGeek.ir

<DIESEL>

⚠ CAUTION

If the battery current sensor or engine-ECU is replaced, make the battery current sensor learn the zero point. (Refer to GROUP 00, Precautions Before Service – Battery Current Sensor Calibration.)

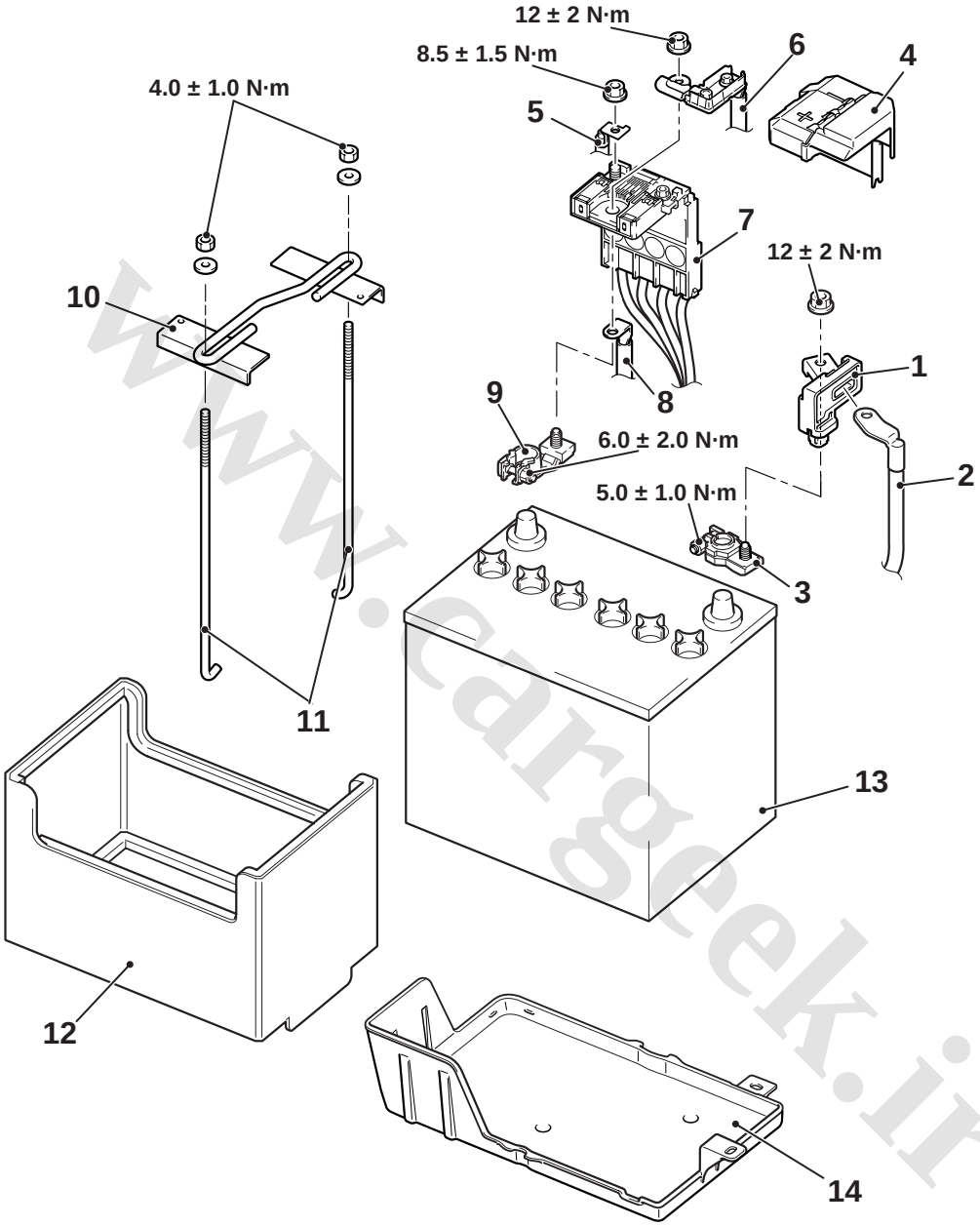

ACB01840AB

Removal steps

1. Battery current sensor
2. Connection of the battery harness [negative battery terminal]
3. Battery terminal assembly [negative battery terminal]
- Air cleaner intake duct (Refer to GROUP 15 –).
4. Fusible link box cover
5. Connection of the battery harness [positive battery terminal]
6. Connection of fusible link box 1P assembly

Removal steps (Continued)

7. Connection of fusible link box 6P assembly
8. Connection of the battery harness [positive battery terminal]
9. Battery terminal assembly [positive battery terminal]
10. Battery holder
11. Battery bolt
12. Battery cover
13. Battery
14. Battery tray

www.cargeek.ir

www.CarGeek.ir

INSPECTION

BATTERY CURRENT SENSOR CHECK <VEHICLES FOR EUR (EXCEPT 4AT)>

M1541002100405

CURRENT SENSOR RESISTANCE VALUE

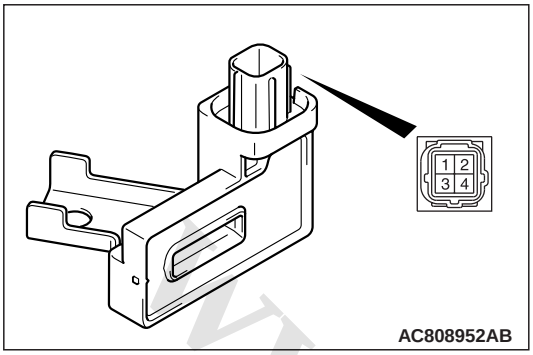

Use the circuit tester to measure the resistance value between battery current sensor connector terminals.

Standard value:

Terminal No. (positive terminal – negative terminal)	Resistance (kΩ)
1 – 3	3 – 10
1 – 4	Less than 0.5
3 – 4	3 – 10

TEMPERATURE SENSOR RESISTANCE VALUE

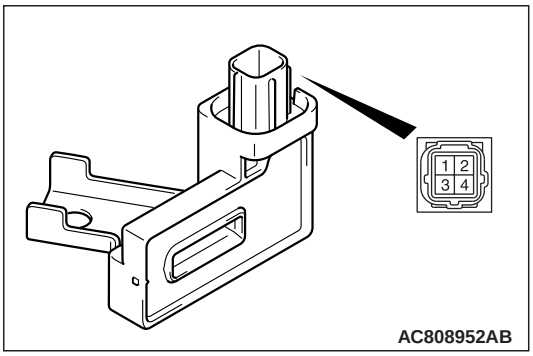

Using the circuit tester, measure the resistance value between the battery current sensor connector terminal No. 2 and No. 3.

Standard value:

Temperature (°C)	Resistance (kΩ)
0	4.5 – 7.2
25	1.6 – 2.5
40	0.96 – 1.40

www.cargeek.ir

www.CarGeek.ir

IGNITION SWITCH

SPECIAL TOOLS

M1541200600163

www.cargeek.ir

www.cargeek.ir

www.CarGeek.ir

Tool	Number	Name	Use
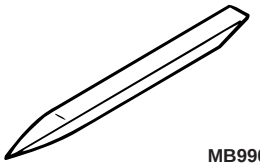 MB990784	MB990784	Ornament remover	Steering column cover removal

www.cargeek.ir

www.cargeek.ir

www.CarGeek.ir

Tool	Number	Name	Use
a 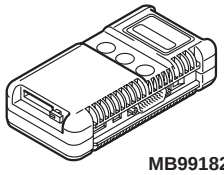 MB991824 b 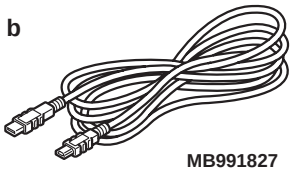 MB991827 c 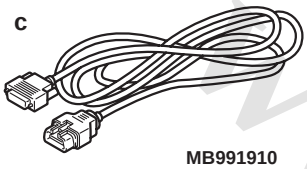 MB991910 d 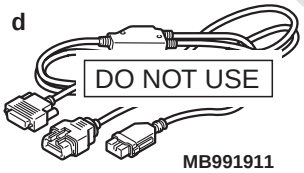 DO NOT USE MB991911 e 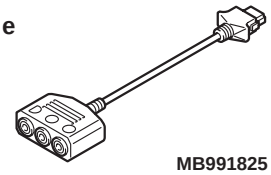 MB991825 f 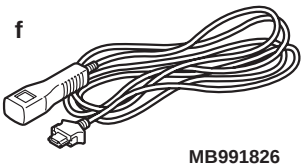 MB991826 MB991955	MB991955 a. MB991824 b. MB991827 c. MB991910 d. MB991911 e. MB991825 f. MB991826	M.U.T.-III sub-assembly a. Vehicle Communication Interface (V.C.I.) b. M.U.T.-III USB cable c. M.U.T.-III Main harness A (Vehicles with CAN communication system) d. M.U.T.-III Main harness B (Vehicles without CAN communication system) e. M.U.T.-III Measurement adapter f. M.U.T.-III Trigger harness	⚠ CAUTION **For vehicles with CAN communication, use M.U.T.-III main harness A to send simulated vehicle speed. If you connect M.U.T.-III main harness B instead, the CAN communication does not function correctly.** Diagnosis code, Data list and Actuator test check
a 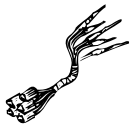 b 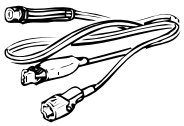 c 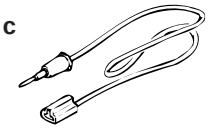 d DO NOT USE MB991223	MB991223 a. MB991219 b. MB991220 c. MB991221 d. MB991222	Harness set a. Test harness b. LED harness c. LED harness adapter d. Probe	Making voltage and resistance measurements during troubleshooting a. For checking connector pin contact pressure b. For checking power supply circuit c. For checking power supply circuit d. For connecting a locally sourced tester

www.cargeek.ir

www.CarGeek.ir

Tool	Number	Name	Use
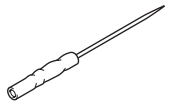 MB992006	MB992006	Extra fine probe	Continuity check and voltage measurement at harness wire or connector

TROUBLESHOOTING

STANDARD FLOW OF DIAGNOSTIC TROUBLE SHOOTING

M1541201400140

Refer to Group 00 – Contents of troubleshooting .

⚠ CAUTION

During diagnosis, a diagnosis code associated with other system may be set when the ignition switch is turned on with connector(s) disconnected. On completion, confirm all systems for diagnosis code(s). If diagnosis code(s) are set, erase them all.

TROUBLE SYMPTOM CHART

M1541201100354

Trouble symptom	Inspection procedure No.	Reference page
The ignition key cylinder illumination lamp does not illuminate/ extinguish normally. <vehicles with WCM>	1	
Malfunction of the ignition switch power supply system	2	

www.cargeek.ir

www.CarGeek.ir

SYMPTOM PROCEDURES

Inspection Procedure 1: Ignition key cylinder illumination lamp does not illuminate/extinguish normally. <vehicles with WCM>

⚠ CAUTION

Whenever the ECU is replaced, ensure that the input and output signal circuits are normal.

Ignition Key Cylinder Illumination Lamp Circuit

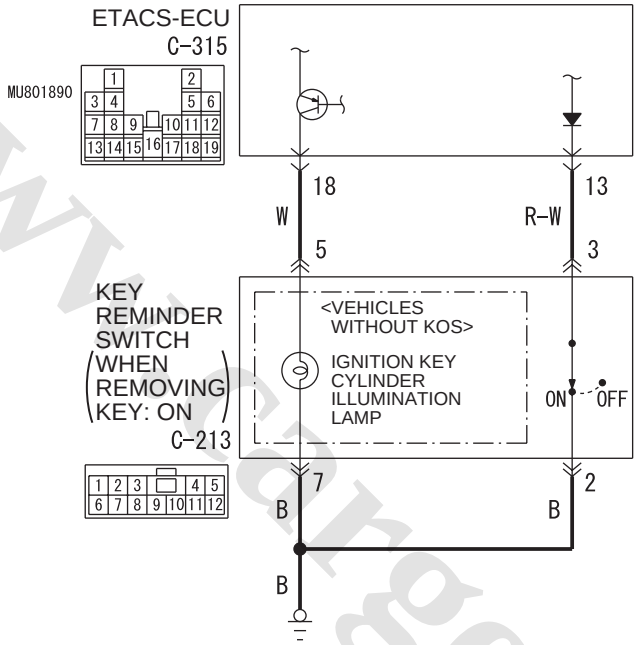

Wire colour code
B : Black LG : Light green G : Green L : Blue W : White Y : Yellow SB : Sky blue
BR : Brown O : Orange GR : Grey R : Red P : Pink V : Violet PU : Purple SI : Silver

W8G54X050A

Connector: C-213 <LHD>

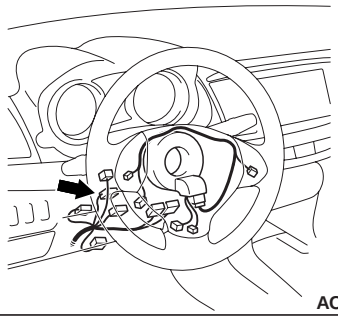

AC612708AU

Connector: C-213 <RHD>

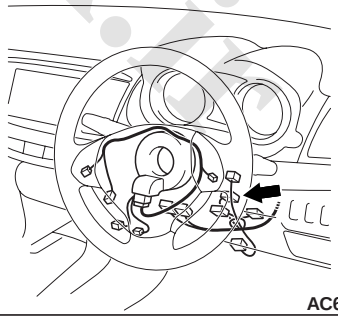

AC612716AL

www.cargeek.ir

www.CarGeek.ir

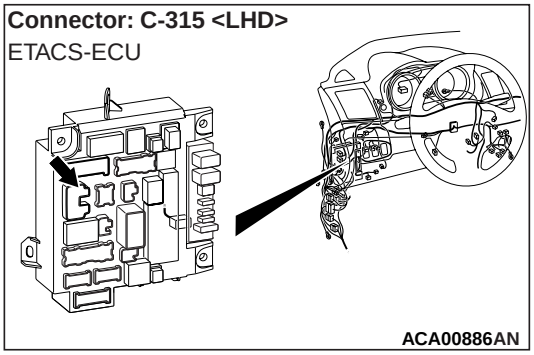

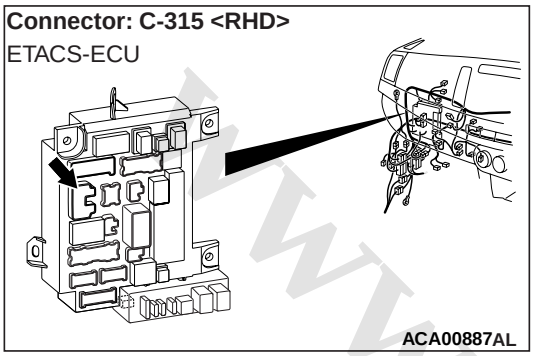

OPERATION
The ETACS-ECU operates this function in accordance with the input signals below.
- Ignition switch (IG1)
- Key reminder switch
- Driver's door switch
- Driver's door lock actuator

COMMENTS ON TROUBLE SYMPTOM
If this function does not work normally, these input signal circuit(s), the ignition key cylinder illumination lamp or the ETACS-ECU may be defective.

PROBABLE CAUSES
- Malfunction of the key reminder switch
- Malfunction of the driver's door switch
- Malfunction of the driver's door lock actuator
- Malfunction of the ignition key cylinder illumination lamp bulb
- Malfunction of the ETACS-ECU
- Damaged harness wires and connectors

DIAGNOSIS PROCEDURE

STEP 1. M.U.T.-III diagnosis code
Check if diagnosis code is set to the ETACS-ECU.

Q: Is the diagnosis code set?
YES : Troubleshoot the ETACS-ECU. Refer to .
NO : Go to Step 2.

STEP 2. M.U.T.-III data list
Check the signal related to the operation of ignition key cylinder illumination lamp.
- Turn the ignition switch to the LOCK (OFF) position.
- Remove the ignition key from the ignition key cylinder.
- Open the driver's door.

Item No.	Item name	Normal condition
Item 228	Dr door unlock	ON
Item 254	IG voltage	0 V
Item 256	Dr door ajar switch	OPEN
Item 264	Handle lock switch	Key in → Key out
Item 270	Dr door lock switch	Not lock
Item 271	Dr door unlock switch	Unlock

OK: Normal conditions are displayed for all the items.

Q: Is the check result normal?
Normal conditions are displayed for all the items. : Go to Step 3.
Normal condition is not displayed for item No. 228. : Troubleshoot the ETACS-ECU. Refer to Inspection Procedure 4 "The front door lock actuator (driver's side) signal is not received." <LH drive vehicles>, <RH drive vehicles>.
Normal condition is not displayed for item No. 254. : Troubleshoot the ETACS-ECU. Refer to Inspection Procedure 2 "The ignition switch (IG1) signal is not received." .
Normal condition is not displayed for item No. 256. : Troubleshoot the ETACS-ECU. Refer to Inspection Procedure 5 "The front door switch (driver's side) signal is not received." .
Normal condition is not displayed for item No. 264. : Troubleshoot the ETACS-ECU. Refer to Inspection Procedure 3 "The key reminder switch signal is not received." .
Normal condition is not displayed for item No. 270, 271. : Troubleshoot the ETACS-ECU. Refer to Inspection Procedure 4 "The front door lock actuator (driver's side) signal is not received." <LH drive vehicles>, <RH drive vehicles>.

www.cargeek.ir

www.CarGeek.ir

STEP 3. Connector check: C-213 key reminder switch connector, C-315 ETACS-ECU connector

Q: Is the check result normal?
YES : Go to Step 4.
NO : Repair the defective connector.

STEP 4. Wiring harness check between the C-213 key reminder switch connector terminal No. 5 and the C-315 ETACS-ECU connector terminal No. 18

- Check the input/output line for open circuit.

Q: Is the check result normal?
YES : Go to Step 5.
NO : Repair the wiring harness.

STEP 5. Check of ignition key cylinder illumination lamp bulb

Check that the ignition key cylinder illumination lamp bulb is normal.

Q: Is the check result normal?
YES : Go to Step 6.
NO : Replace the bulb of the ignition key cylinder illumination lamp.

STEP 6. Wiring harness check between the C-213 key reminder switch connector terminal No. 7 and the body earth

Q: Is the check result normal?
YES : Go to Step 7.
NO : Repair the wiring harness.

STEP 7. Retest the system

Check that the ignition key cylinder illumination lamp illuminates/extinguishes normally.

Q: Is the check result normal?
YES : The trouble can be an intermittent malfunction (Refer to GROUP 00 – How to use Troubleshooting/inspection Service Points – How to Cope with Intermittent Malfunction).
NO : Replace the ETACS-ECU.

Inspection Procedure 2: Malfunction of the ignition switch power supply system

⚠ CAUTION
Whenever the ECU is replaced, ensure that the input and output signal circuits are normal.

Ignition Switch Power Source Circuit

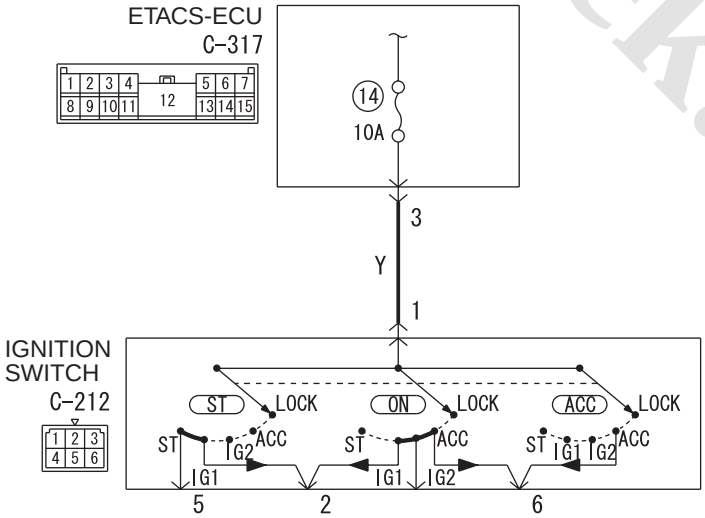

Wire colour code
B : Black LG : Light green G : Green L : Blue W : White Y : Yellow SB : Sky blue
BR : Brown O : Orange GR : Grey R : Red P : Pink V : Violet PU : Purple SI : Silver WAS54E036A

www.cargeek.ir

www.CarGeek.ir

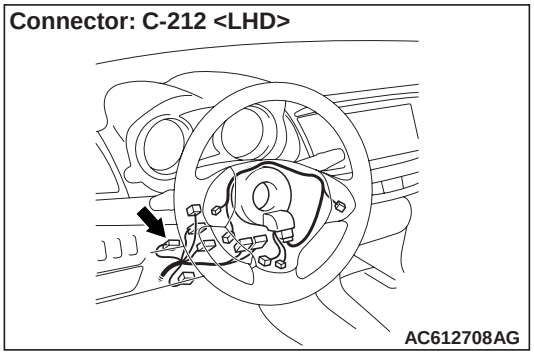

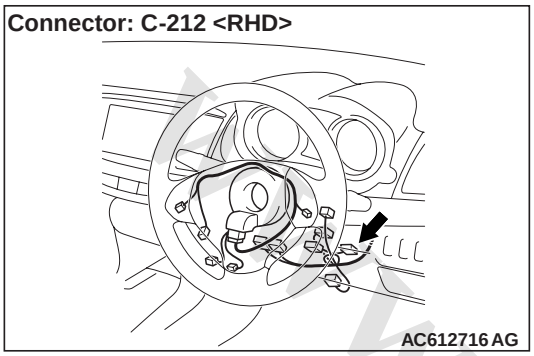

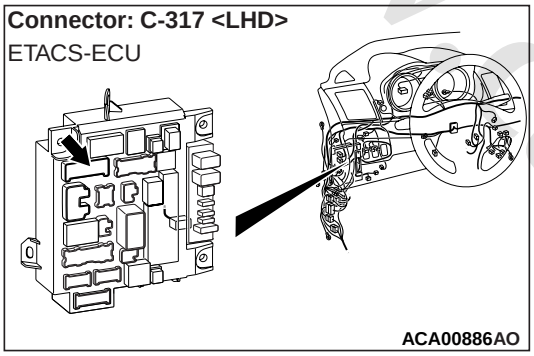

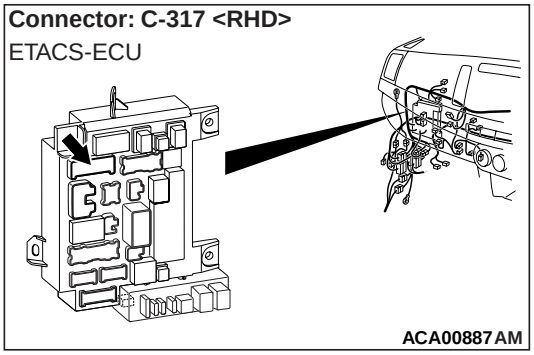

COMMENTS ON TROUBLE SYMPTOM

When the power supply system of ignition switch has a problem, none of the equipment and system connected to the ignition switch works even if the ignition switch is operated.

POSSIBLE CAUSES

- Malfunction of the ignition switch
- Malfunction of the fuse No.14
- Malfunction of the ETACS-ECU
- Damaged harness wires and connectors

DIAGNOSIS PROCEDURE

STEP 1. Connector check: C-204 ignition switch connector

Q: Is the check result normal?
YES : Go to Step 2.
NO : Repair the defective connector.

STEP 2. Voltage measurement at ignition switch connector C-204 in order to check the battery circuit of power supply system to the ignition switch.

(1) Disconnect the ignition connector C-204 and measure the voltage at ignition switch connector C-204 harness side.
(2) Measure the voltage between terminal 1 and earth.

OK: System voltage

Q: Is the check result normal?
YES : Go to Step 6.
NO : Go to Step 3.

STEP 3. Check the fuse No.14.

Q: Is the check result normal?
YES : Go to Step 4.
NO : Replace the fuse No.14. (Check that there is not a short to earth in the circuit of lower reaches before replacing. If there are any problems, replace the fuse after the circuit of lower reaches is repaired.)

STEP 4. Connector check: C-316 ETACS-ECU connector

Q: Is the check result normal?
YES : Go to Step 5.
NO : Repair the defective connector.

STEP 5. Check the wiring harness from ignition switch connector C-204 (terminal No.1) and ETACS-ECU connector C-316 (terminal No.3).

- Check the battery power supply line for open circuit.

Q: Is the check result normal?
YES : Go to Step 7.
NO : Repair the wiring harness.

STEP 6. Check the ignition switch.

Refer to .

Q: Is the ignition switch in good condition?

www.cargeek.ir

YES : Go to Step 7.
NO : Replace the ignition switch.

STEP 7. Retest the system.

Q: Do the device and the system work normally when the ignition switch is operated?
YES : The trouble can be an intermittent malfunction (Refer to GROUP 00 – How to Cope with Intermittent Malfunction).
NO : Replace the ETACS-ECU.

ON-VEHICLE SERVICE

Keyless operation key return reminder buzzer check <Vehicles with KOS>

M1541200700201

1. Release the steering wheel lock with the driver's door closed, and turn the IG knob to the position other than the LOCK (OFF) position.
2. Change the driver's door state from closed to open.
3. Check that the buzzer sounds normally.
4. If a malfunction is found, carry out the trouble-shooting (Refer to).

www.cargeek.ir

www.CarGeek.ir

REMOVAL AND INSTALLATION

M1541200300838

⚠ CAUTION

- **Before removing the steering wheel and driver's air bag module assembly, refer to GROUP 52B – Service Precautions and Driver's Air Bag Module and Clock Spring . <Vehicles with WCM>**
- **After the installation, perform a calibration for the ASC-ECU to learn the steering wheel sensor neutral point (Refer to GROUP 35C, On-vehicle Service – Steering Wheel Sensor Calibration). <Vehicles with both WCM and ASC or vehicles with both WCM and AFS>**

Pre-removal Operation	Post-installation Operation
• Check of steering wheel straight-ahead position <Vehicles with WCM> • Removal of steering wheel assembly (Refer to GROUP 37A – Steering Wheel <Power Steering> or GROUP 37B – Steering Wheel <Electrical Power Steering>). <Vehicles with WCM>	• Installation of steering wheel assembly (Refer to GROUP 37A – Steering Wheel <Power Steering> or GROUP 37B – Steering Wheel <Electrical Power Steering>). <Vehicles with WCM> • Check of steering wheel straight-ahead position <Vehicles with WCM>

www.cargeek.ir

www.cargeek.ir

www.CarGeek.ir

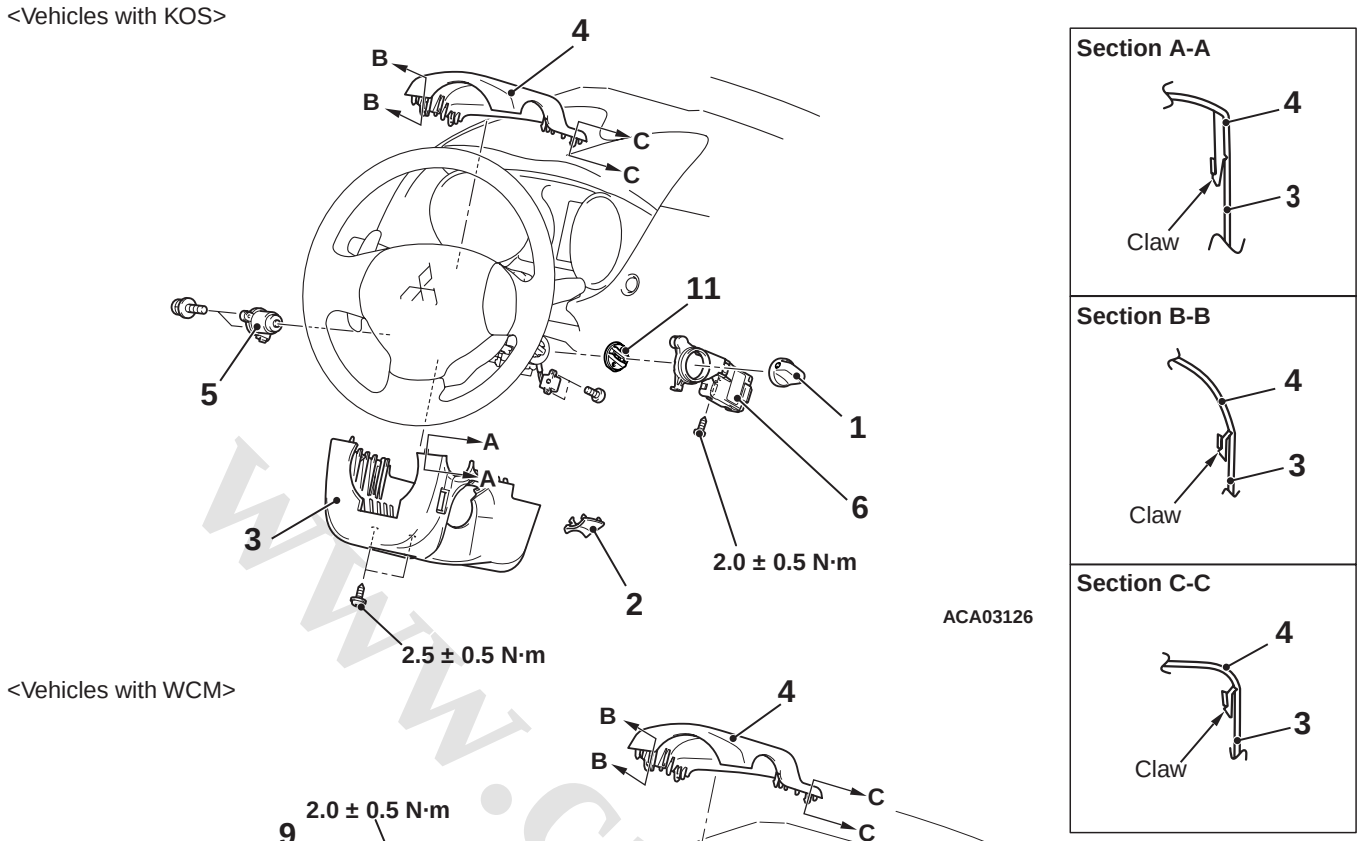

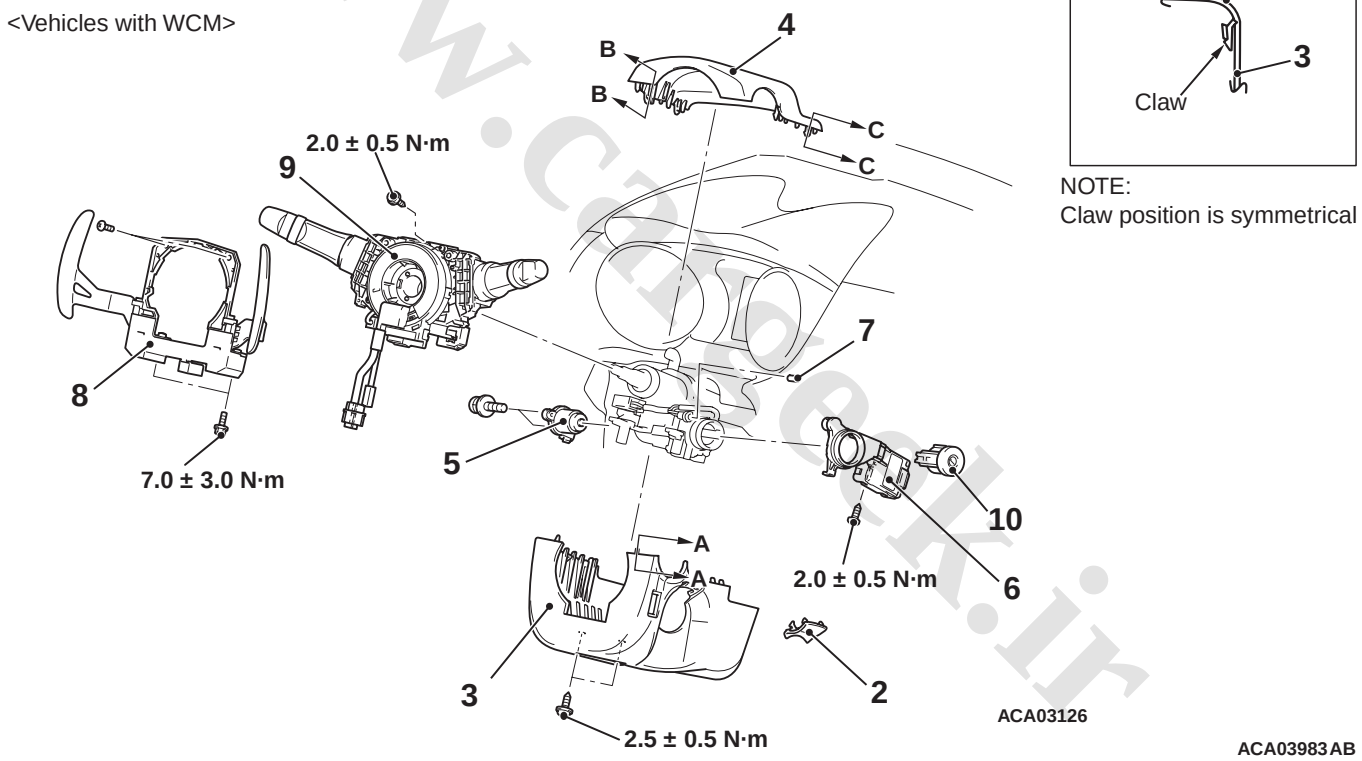

Removal Steps

1. IG knob cap <Vehicles with KOS>
2. Ignition key cover
3. Steering column cover lower
4. Steering column cover upper
5. Ignition switch

>>**A**<< 6. WCM <Vehicles with WCM>/ receiver antenna module <Vehicles with KOS>

7. Key illumination bulb <Vehicles with WCM and paddle shift>
8. Paddle shift assembly <Vehicles with WCM and paddle shift>

Removal Steps (Continued)

9. Column switch assembly <Vehicles with WCM>

<<**A**>> 10. Steering lock cylinder <Vehicles with WCM>

<<B>> 11. IG knob <Vehicles with KOS>

REMOVAL SERVICE POINTS

<<A>> STEERING LOCK CYLINDER REMOVAL <VEHICLES WITH WCM>

1. Insert the key into the steering lock cylinder, and turn the ignition key to the ACC position.

www.cargeek.ir

www.CarGeek.ir

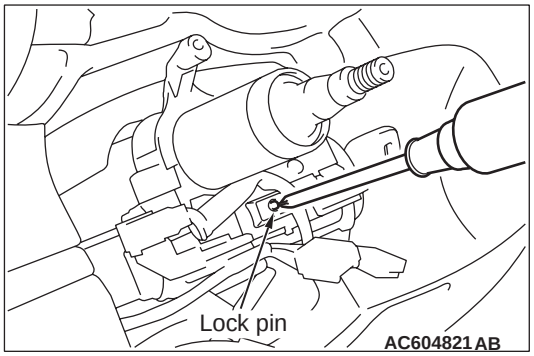

2. With using a cross-headed screw driver (small) or similar items to press in the lock pin, remove the ignition key, and then remove the steering lock cylinder.

<<B>> IG KNOB REMOVAL <VEHICLES WITH KOS>

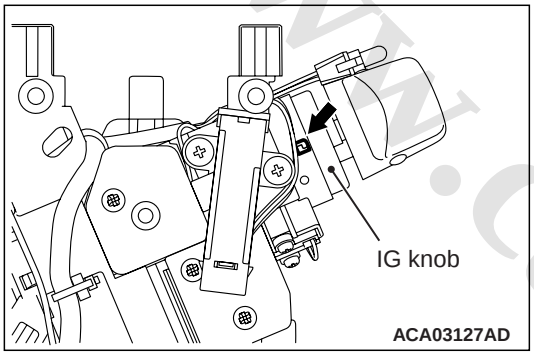

Insert a flat-tipped screwdriver into the concave portion as shown to pull out the IG knob.

INSTALLATION SERVICE POINT

>>A<< WIRELESS CONTROL MODULE <VEHICLES WITH WCM>/RECEIVER ANTENNA MODULE <VEHICLES WITH KOS> INSTALLATION

Check that the top claw of receiver antenna module is fixed securely to the boss of steering lock and the antenna is not floated on the key cylinder.

INSPECTION

IGNITION SWITCH CONTINUITY CHECK

M1541200400170

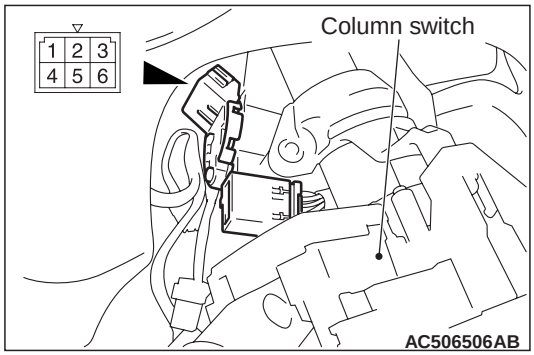

With the ignition switch mounted to the vehicle, disconnect and check the ignition switch connection connector.

Ignition key position	Terminal number	Normal condition
LOCK	1 – 2, 1 – 4, 1 – 5, 1 – 6	No continuity
ACC	1 – 6	Continuity exists (2 Ω or less)
ON	1 – 2 – 4 – 6	Continuity exists (2 Ω or less)
START	1 – 2 – 5	Continuity exists (2 Ω or less)

KEY REMINDER SWITCH INSPECTION

M1541200500166

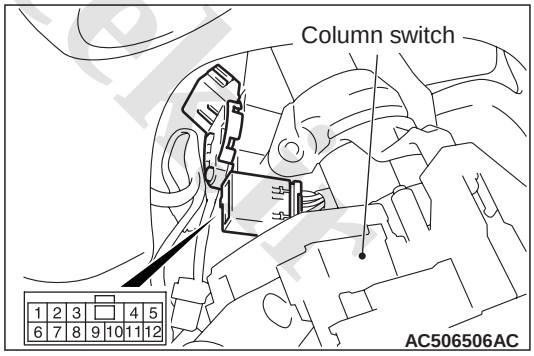

With the key reminder switch mounted to the vehicle, disconnect the key reminder switch connection connector, and then perform the continuity check.

Key status	Terminal number	Normal condition
Key removed	2 – 3	Continuity exists (2 Ω or less)
Key inserted	2 – 3	No continuity

www.cargeek.ir

COMBINATION METER

SERVICE SPECIFICATIONS

M1540200200731

Item				Standard value	Limit value
Speedometer indication range		km/h	at 20 km/h	20.0 – 24.0	–
			at 40 km/h	40.0 – 44.0	–
			at 80 km/h	80.5 – 85.5	–
			at 120 km/h	121.5 – 127.5	–
			at 160 km/h	162.5 – 169.5	–
			at 200 km/h	203.5 – 211.5	–
			at 240 km/h	244.5 – 254.5	–
		mph	at 10 mph	10.0 – 12.5	–
			at 25 mph	25.0 – 27.5	–
			at 50 mph	50.3 – 53.5	–
			at 75 mph	76.0 – 80.0	–
			at 100 mph	101.5 – 106.0	–
			at 125 mph	127.2 – 132.2	–
			at 150 mph	152.8 – 159.1	–
Speedometer needle fluctuation km/h (Vehicle speed: 35 km/h or more)				–	± 3
Tachometer indicating tolerance r/min Items in ( ) indicates the reference value.			Engine speed at 600 r/min	± 50	–
			(Engine speed at 2,000 r/min)	(± 50)	–
			Engine speed at 3,000 r/min	± 50	–
			(Engine speed at 4,000 r/min)	(± 50)	–
			Engine speed at 5,000 r/min	± 50	–
			Engine speed at 6,000 r/min	± 50	–
			(Engine speed at 7,000 r/min) <petrol engine>	(± 50)	–
			(Engine speed at 8,000 r/min) <petrol engine>	(± 50)	–
2WD	Nominal resistance of the fuel gauge unit Ω		Stopper position "F"	13.0 ± 1.0	–
			Stopper position "E"	120.0 ± 1.0	–
	Fuel gauge unit float height mm	Petrol engine	Stopper position "F"	181.5 ± 4.0	–
			Stopper position "E"	26.7 ± 4.0	–
		Diesel engine	Stopper position "F"	185.1	–
			Stopper position "E"	29.8	–

www.cargeek.ir

www.CarGeek.ir

Item				Standard value	Limit value
4WD	Nominal resistance of the fuel gauge unit Ω	main	Stopper position "F"	6.5 ± 1.0	–
			Stopper position "E"	41.9 ± 1.0	–
		sub	Stopper position "F"	6.5 ± 1.0	–
			Stopper position "E"	78.1 ± 1.0	–
	Fuel gauge unit float height mm	main	Stopper position "F"	140.9 ± 4.0	–
			Stopper position "E"	39.1 ± 4.0	–
		sub	Stopper position "F"	14.2 ± 3.0	–
			Stopper position "E"	179.3 ± 3.0	–

www.cargeek.ir

www.cargeek.ir

www.CarGeek.ir

SPECIAL TOOLS

M1540200300192

www.cargeek.ir

www.cargeek.ir

www.CarGeek.ir

Tool	Number	Name	Use
a 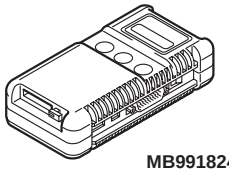 MB991824 b 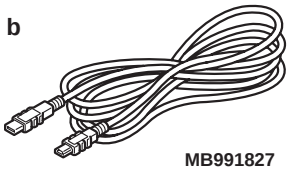 MB991827 c 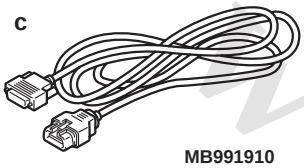 MB991910 d 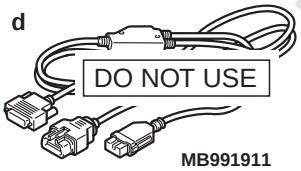 DO NOT USE MB991911 e 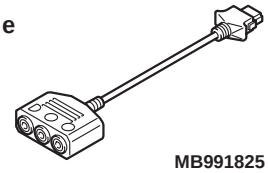 MB991825 f 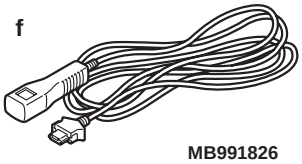 MB991826 MB991955	MB991955 a. MB991824 b. MB991827 c. MB991910 d. MB991911 e. MB991825 f. MB991826	M.U.T.-III sub-assembly a. Vehicle Communication Interface (V.C.I.) b. M.U.T.-III USB cable c. M.U.T.-III main harness A (Vehicles with CAN communication system) d. M.U.T.-III main harness B (Vehicles without CAN communication system) e. M.U.T.-III measure adapter f. M.U.T.-III trigger harness	⚠ CAUTION **For vehicles with CAN communication, use M.U.T.-III main harness A to send simulated vehicle speed. If you connect M.U.T.-III main harness B instead, the CAN communication does not function correctly.** Combination meter check (Diagnosis code, service data, actuator test)

www.cargeek.ir
www.cargeek.ir

www.CarGeek.ir

Tool	Number	Name	Use
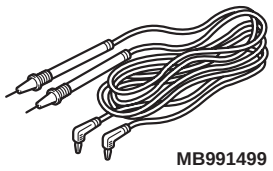 MB991499	MB991499	Measurement probe	Measurements of voltage and resistance value *NOTE: M.U.T.-II attached probe (Commercial probes can also be used.)*
a 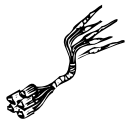 b 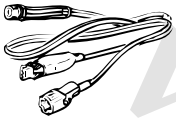 c 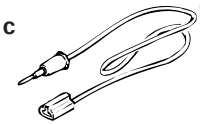 d DO NOT USE MB991223	MB991223 a. MB991219 b. MB991220 c. MB991221 d. MB991222	Harness set a. Check harness b. LED harness c. LED harness adapter d. Probe	Continuity check and voltage measurement at harness wire or connector a. For checking connector pin contact pressure b. For checking power supply circuit c. For checking power supply circuit d. For connecting a locally sourced tester
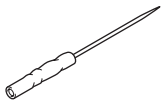 MB992006	MB992006	Extra fine probe	Continuity check and voltage measurement at harness wire or connector

TROUBLESHOOTING

STANDARD FLOW OF DIAGNOSTIC TROUBLESHOOTING

M1540203800204

Refer to GROUP 00 – Contents of troubleshooting .

DIAGNOSIS FUNCTION

M1540200500129

HOW TO READ DIAGNOSIS CODE

Refer to GROUP 00 – Diagnosis function .

HOW TO ERASE DIAGNOSIS CODE

Refer to GROUP 00 – Diagnosis function .

CHECK OF FREEZE FRAME DATA

The freeze frame data can be checked by using the M.U.T.-III.

When detecting fault and storing the diagnosis code, the ECU connected to CAN bus line obtains the data before the determination of the diagnosis code and the data when the diagnosis code is determined, and then stores the ECU status of that time. By analysing each data from M.U.T.-III, the troubleshooting can be performed more efficiently. The displayed items are as the table below.

www.cargeek.ir

www.CarGeek.ir

Display item list

Item No.	Item name	Data item	Unit
1	Odometer	Total driving distance after the diagnosis code is generated	km
2	Ignition cycle	Number of times the ignition switch is turned "ON" or "LOCK (OFF)" after the past failure transition	Number of counts is displayed.
4	Current trouble accumulative time	Cumulative time for current malfunction of diagnosis code	min

DIAGNOSIS CODE CHART

M1540200600535

⚠ CAUTION

- **During diagnosis, a diagnosis code associated with other system may be set when the ignition switch is turned on with connector(s) disconnected. On completion, confirm all systems for diagnosis code(s). If diagnosis code(s) are set, erase them all.**
- **If the combination meter needs to be replaced as a result of troubleshooting, the current driving distance and elapsed days must be entered into the meter after the replacement in order to be used for service reminder function. Therefore, read "Integrated mileage for reminder," "Integrated days for reminder," "Mileage until Extra reminder," "Months until Extra reminder," and "Current schedule" from the meter before the replacement using the special function of M.U.T.-III, and note them. For the operation method of M.U.T.-III, refer to . If "Integrated mileage for reminder" or "Integrated days for reminder" cannot be read from the meter using M.U.T.-III, use the following method.**
  a. **As for the driving distance for check warning, use the driving distance displayed on the multi information display.**
  b. **As for the elapsed days for check warning, calculate the number of elapsed days from the delivery date to the customer (service reminder function start date) and current date.**

Diagnosis code No.	Diagnostic item	Reference page
B1200	Malfunction of odometer	
B1201	Fuel information error	
B1209	Test mode	
B2203	Chassis No. not programmed	
B2463	Rheostat switch seizure	
B2464	Meter information switch seizure	
B2465	Ignition switch signal error	
U0019	Bus off (CAN-B)	
U0100	Engine ECU CAN timeout	
U0141	ETACS-ECU CAN timeout	
U0151	SRS-ECU CAN timeout	
U0164	A/C/Heater control unit CAN timeout	
U0168	KOS/WCM CAN timeout	
U0184	Audio CAN timeout	
U0245	Audio visual navigation unit CAN timeout	
U1415	Coding not completed/Data fail	

www.cargeek.ir

www.CarGeek.ir

DIAGNOSIS CODE PROCEDURES

Code No.B1200 Malfunction of odometer

TROUBLE JUDGMENT
If the odometer information, which is stored in the combination meter, is abnormal with the ignition switch at the ON position and the system voltage at 10 –16 V (data from ETACS-ECU), the diagnosis code No. B1200 is stored.

PROBABLE CAUSES
Malfunction of combination meter

DIAGNOSIS PROCEDURE

STEP 1. M.U.T.-III diagnosis code
Check if diagnosis code is set to the combination meter.
(1) Erase the diagnosis code.
(2) Turn the ignition switch from "LOCK" (OFF) position to "ON" position.
(3) Check if diagnosis code is set.

Q: Is the diagnosis code set?
YES : Replace the combination meter, and then go to Step 2.
NO : The trouble can be an intermittent malfunction (Refer to GROUP 00 – How to use Troubleshooting/Inspection Service Points – How to Cope with Intermittent Malfunction).

STEP 2. Check whether the diagnosis code is reset.
Check if diagnosis code is set to the combination meter.
(1) Erase the diagnosis code.
(2) Turn the ignition switch from "LOCK" (OFF) position to "ON" position.
(3) Check if diagnosis code is set.

Q: Is the diagnosis code set?
YES : Go to Step 1.
NO : The diagnosis is complete.

Code No.B1201: Fuel information error

⚠ CAUTION
Whenever the ECU is replaced, ensure that the communication circuit is normal.

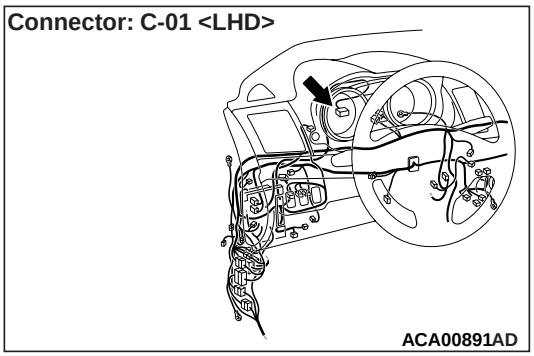

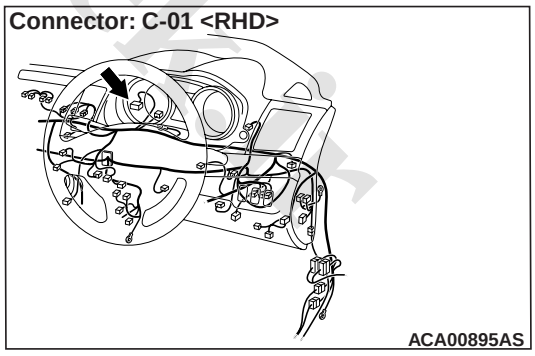

www.cargeek.ir

www.CarGeek.ir

Connector: D-19 <LANCER >

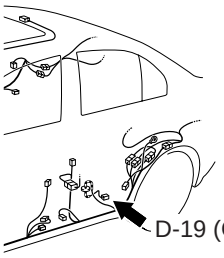

ACB02657AB

Connector: D-19 <LANCER SPORTBACK>

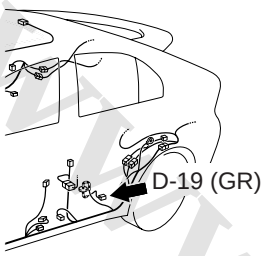

ACB02662AB

TROUBLE JUDGEMENT

With the ignition switch at the ON position and the system voltage at 10 –16 V (data from ETACS-ECU), if the combination meter detects the abnormal resistance of fuel level sensor circuit for 64 seconds continuously, the diagnosis code No. B1201 is stored.

PROBABLE CAUSES

- Damaged harness wires and connectors
- Malfunction of fuel pump and gauge assembly
- Malfunction of combination meter

DIAGNOSIS PROCEDURE

STEP 1. Connector check: D-19 fuel pump and gauge unit connector

Q: Is the check result normal?
YES : Go to Step 2.
NO : Repair the connector, and then go to Step 9.

STEP 2. Check of fuel pump and gauge unit circuit

(1) Disconnect the D-19 fuel pump and gauge unit connector.
(2) Use the special tool Check harness (MB991219) to connect a test lamp (12 V - 3.4 W) between the wiring harness connector terminals 1 and 2.
(3) Turn the ignition switch to the ON position.
(4) Check if the test lamp illuminates.

OK: Illuminates

Q: Is the check result normal?
YES : Go to Step 8.
NO : Go to Step 3.

STEP 3. Fuel pump and gauge unit and fuel gauge unit check

Check the fuel pump and gauge unit and fuel gauge unit. Refer to .

Q: Is the check result normal?
YES : Go to Step 4.
NO : Replace the fuel pump and gauge unit and fuel gauge unit.

STEP 4. Resistance measurement at the D-19 fuel pump and gauge unit connector

(1) Disconnect the fuel pump and gauge unit connector, the measure at the harness side.
(2) Measure the resistance between the D-19 fuel pump and gauge unit connector terminal No. 1 and the body earth.

OK: Continuity exists (2 Ω or less)

Q: Is the check result normal?
YES : Go to Step 6.
NO : Go to Step 5.

STEP 5. Check the wiring harness between the D-19 fuel pump and gauge unit connector terminal No. 1 and the body earth.

Check the earth wires for open circuit.

Q: Is the check result normal?
YES : Go to Step 9.
NO : Repair the wiring harness, and then go to Step 9.

STEP 6. Connector check: C-01 combination meter connector

Q: Is the check result normal?
YES : Go to Step 7.
NO : Repair the connector, and then go to Step 9.

STEP 7. Check the wiring harness between the C-01 combination meter connector terminal No. 18 and the D-19 fuel pump and gauge unit connector terminal No. 2

Check the output lines for open circuit.

NOTE: Before the wiring harness check, check the intermediate connectors C-16 and D-09, and repair them if necessary.

Q: Is the check result normal?

www.cargeek.ir

www.CarGeek.ir

YES : Go to Step 8.
NO : Repair the wiring harness, and then go to Step 9.

STEP 8. M.U.T.-III actuator test

- Item 03: Fuel gauge (target value): 0 →100%

OK: The fuel gauge operates.

Q: Is the check result normal?
YES : Go to Step 9.
NO : Replace the combination meter.

STEP 9. Check whether the diagnosis code is reset.

Check again if the diagnosis code is set to the combination meter.
(1) Erase the diagnosis code.
(2) Turn the ignition switch from "LOCK" (OFF) position to "ON" position.
(3) Check if diagnosis code is set.

Q: Is the diagnosis code set?
YES : Replace the combination meter.
NO : The diagnosis is complete.

Code No.B1209 Test mode

TROUBLE JUDGMENT

When the mode is changed to the meter test mode (supplier mode), the combination meter stores the diagnosis code No. B1209.

PROBABLE CAUSES

Malfunction of combination meter

DIAGNOSIS PROCEDURE

Replace the combination meter.

Code No.B2203 Chassis No. not programmed

TROUBLE JUDGMENT

With the ignition switch at the ON position, if the chassis number code is not written to the combination meter, diagnosis code No. B2203 is stored.

PROBABLE CAUSES

- Malfunction of CAN bus line
- Malfunction of the ETACS-ECU
- Malfunction of combination meter

DIAGNOSIS PROCEDURE

STEP 1. M.U.T.-III CAN bus diagnostics

Use the M.U.T.-III to diagnose the CAN bus lines.

Q: Is the check result normal?
YES : Go to Step 2.
NO : Repair the CAN bus line (Refer to GROUP 54C – Troubleshooting).

STEP 2. M.U.T.-III other system diagnosis code

Check again if the diagnosis code is set to the ETACS-ECU.

Q: Is the diagnosis code set?
YES : Troubleshoot the ETACS-ECU. Refer to ETACS-ECU – Diagnosis code chart .
NO : Go to Step 3.

STEP 3. Check whether the diagnosis code is reset.

Check again if the diagnosis code is set to the combination meter.
(1) Erase the diagnosis code.
(2) Turn the ignition switch from "LOCK" (OFF) position to "ON" position.
(3) Check if diagnosis code is set.

Q: Is the diagnosis code set?
YES : Replace the combination meter.
NO : The trouble can be an intermittent malfunction (Refer to GROUP 00 – How to use Troubleshooting/Inspection Service Points – How to Cope with Intermittent Malfunction).

www.cargeek.ir

www.CarGeek.ir

Code No.B2463 Rheostat switch seizure

TROUBLE JUDGMENT

If the combination meter detects the rheostat switch pressed state for 60 seconds or more continuously, the diagnosis code No. B2463 is stored.

PROBABLE CAUSES

- Malfunction of combination meter
- Malfunction of meter hood assembly (rheostat switch knob)

DIAGNOSIS PROCEDURE

STEP 1. Rheostat switch check

Check whether an abnormality is present to the combination meter and the rheostat switch knob attached to the meter hood assembly.

Q: Is the check result normal?

YES : Go to Step 2.

NO : Replace the combination meter or meter hood assembly, and then go to Step 2.

STEP 2. M.U.T.-III diagnosis code

Check again if the diagnosis code is set to the combination meter.

(1) Erase the diagnosis code.
(2) Turn the ignition switch from "LOCK" (OFF) position to "ON" position.
(3) Check if diagnosis code is set.

Q: Is the diagnosis code set?

YES : Replace the combination meter, and then go to Step 3.

NO : The diagnosis is complete.

STEP 3. Check whether the diagnosis code is reset.

Check again if the diagnosis code is set to the combination meter.

(1) Erase the diagnosis code.
(2) Turn the ignition switch from "LOCK" (OFF) position to "ON" position.
(3) Check if diagnosis code is set.

Q: Is the diagnosis code set?

YES : Go to Step 1.

NO : The diagnosis is complete.

www.cargeek.ir

www.cargeek.ir

www.CarGeek.ir

Code No.B2464 Meter information switch seizure

⚠ CAUTION
Whenever the ECU is replaced, ensure that the communication circuit is normal.

Meter Information Switch Circuit

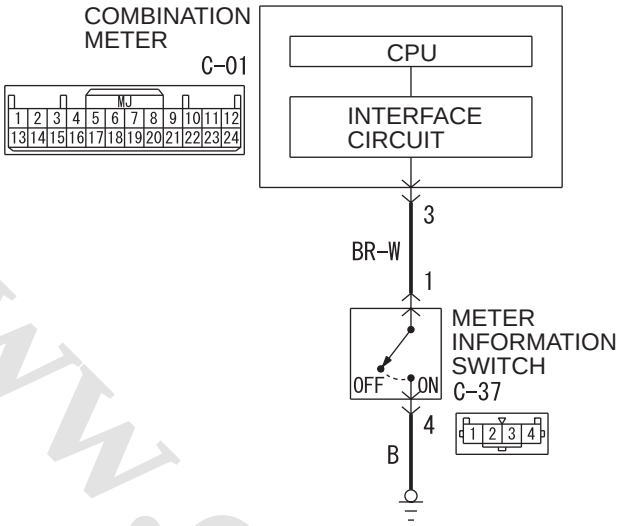

Wire colour code
B : Black LG : Light green G : Green L : Blue W : White Y : Yellow SB : Sky blue
BR : Brown O : Orange GR : Grey R : Red P : Pink V : Violet PU : Purple SI : Silver

W8G54X055A

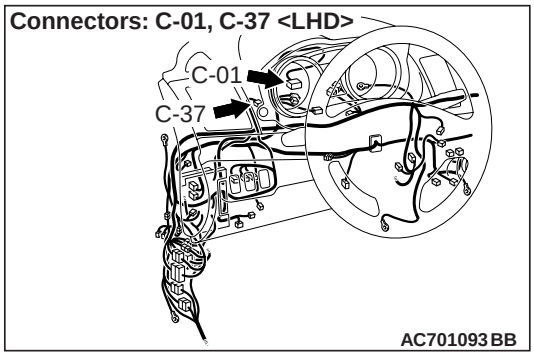

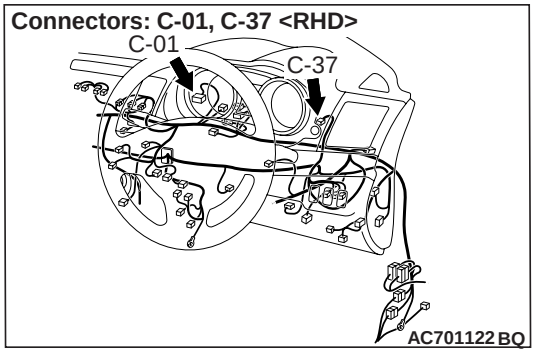

TROUBLE JUDGEMENT

If the combination meter detects the meter information switch pressed state for 60 seconds or more continuously, the diagnosis code No. B2464 is stored.

PROBABLE CAUSES

- Damaged harness wires and connectors
- Malfunction of meter information switch
- Malfunction of combination meter

DIAGNOSIS PROCEDURE

STEP 1. Connector check: C-37 meter information switch connector

Q: Is the check result normal?
YES : Go to Step 2.
NO : Repair the connector.

STEP 2. Meter information switch check

Check the meter information switch. Refer to .

Q: Is the check result normal?
YES : Go to Step 3.
NO : Replace the meter information switch.

STEP 3. Resistance measurement at the C-37 meter information switch connector

(1) Disconnect the meter information switch connector, and then measure at the wiring harness side.
(2) Measure the resistance from C-37 meter

www.cargeek.ir

www.CarGeek.ir

information switch connector terminal No. 4 to body earth.

OK: Continuity exists (2 Ω or less)

Q: Is the check result normal?
YES : Go to Step 5.
NO : Go to Step 4.

STEP 4. Check the wiring harness between the C-37 meter information switch connector terminal No. 4 and the body earth.
Check the earth wires for open circuit.

Q: Is the check result normal?
YES : Go to Step 7.
NO : Repair the wiring harness.

STEP 5. Connector check: C-01 combination meter connector

Q: Is the check result normal?
YES : Go to Step 6.
NO : Repair the connector.

STEP 6. Check the wiring harness between the C-01 combination meter connector terminal No. 3 and the C-37 meter information switch terminal No. 1.
Check the output lines for open circuit.

Q: Is the check result normal?
YES : Go to Step 7.
NO : Repair the wiring harness.

STEP 7. Check whether the diagnosis code is reset.
Check again if the diagnosis code is set to the combination meter.
(1) Erase the diagnosis code.
(2) Turn the ignition switch from "LOCK" (OFF) position to "ON" position.
(3) Check if diagnosis code is set.

Q: Is the diagnosis code set?
YES : Go to Step 1.
NO : The diagnosis is complete.

Code No.B2465 Ignition switch signal error

TROUBLE JUDGMENT
If 5 seconds or more elapses with the ignition switch state and the data from the CAN communication contradicted, the combination meter stores the diagnosis code No. B2465.

PROBABLE CAUSES
- Malfunction of CAN bus line
- Malfunction of the ETACS-ECU
- Malfunction of combination meter

DIAGNOSIS PROCEDURE

STEP 1. M.U.T.-III other system diagnosis code
Check again if the diagnosis code is set to the ETACS-ECU.

Q: Is the diagnosis code set?
YES : Troubleshoot the ETACS-ECU. Refer to ETACS-ECU – Diagnosis code chart .
NO : Go to Step 2.

STEP 2. M.U.T.-III CAN bus diagnostics
Use the M.U.T.-III to diagnose the CAN bus lines.

Q: Is the check result normal?
YES : Go to Step 3.
NO : Repair the CAN bus line (Refer to GROUP 54C – Troubleshooting).

STEP 3. Combination meter operation check
Check that the combination meter works normally.

Q: Is the check result normal?
YES : Go to Step 4.
NO : Check the power supply circuit of combination meter. Refer to .

STEP 4. Check whether the diagnosis code is reset.
Check again if the diagnosis code is set to the combination meter.
(1) Erase the diagnosis code.
(2) Turn the ignition switch from "LOCK" (OFF) position to "ON" position.
(3) Check again if the diagnosis code is set to the combination meter.

Q: Is the diagnosis code set?

www.cargeek.ir

YES : Replace the combination meter.
NO : The trouble can be an intermittent malfunction (Refer to GROUP 00 – How to use Troubleshooting/Inspection Service Points – How to Cope with Intermittent Malfunction).

Code No.U0019 Bus off (CAN-B)

⚠ CAUTION

- **If diagnosis code No. U0019 is set, be sure to diagnose the CAN bus line.**
- **When replacing the ECU, always check that the communication circuit is normal.**

DIAGNOSTIC FUNCTION

If the CAN-B circuit malfunction occurs, the combination meter sets the diagnosis code No. U0019.

JUDGMENT CRITERIA

With the ignition switch at the ON position and the system voltage at 10 – 16 V (data from ETACS-ECU), if the combination meter becomes unable to transmit data normally due to the CAN-B bus circuit malfunction, the combination meter determines that a problem has occurred.

PROBABLE CAUSES

- Malfunction of CAN bus line
- Malfunction of the combination meter
- Malfunction of wiring harness or connector

DIAGNOSIS PROCEDURE

STEP 1. M.U.T.-III CAN bus diagnostics

Use the M.U.T.-III to diagnose the CAN bus lines.

Q: Is the check result normal?

YES : Go to Step 2.
NO : Repair the CAN bus line (Refer to GROUP 54C – Troubleshooting).

STEP 2. Check whether the diagnosis code is reset.

Check again if the diagnosis code is set to the KOS-ECU.

(1) Erase the diagnosis code.
(2) Turn the ignition switch from "LOCK" (OFF) position to "ON" position.
(3) Check if diagnosis code is set.

Q: Is the diagnosis code set?

YES : Replace combination meter.
NO : The trouble can be an intermittent malfunction (Refer to GROUP 00 – How to use Troubleshooting/inspection Service Points – How to Cope with Intermittent Malfunction).

Code No.U0100 Engine CAN timeout

⚠ CAUTION

- **If the diagnosis code No. U0100 is set, be sure to diagnose the CAN bus line.**
- **When replacing the ECU, always check that the communication circuit is normal.**

DIAGNOSTIC FUNCTION

The combination meter sets diagnosis code No.U0100 when it cannot receive signals from the engine ECU.

JUDGEMENT CRITERIA

With the statuses that the ignition switch is at ON position, system voltage is 10–16 V (data from ETACS-ECU), and there is no malfunction to the power supply fuse (IOD fuse), or odometer value is 80.5 km or more, if the communication with engine ECU cannot be established for 600 ms or more, the combination meter determines that a problem has occurred.

PROBABLE CAUSES

- Malfunction of CAN bus line
- Malfunction of engine ECU
- Malfunction of combination meter

www.cargeek.ir

www.CarGeek.ir

DIAGNOSIS PROCEDURE

STEP 1. M.U.T.-III CAN bus diagnostics
Use the M.U.T.-III to diagnose the CAN bus lines.

Q: Is the check result normal?
YES : Go to Step 2.
NO : Repair the CAN bus line (Refer to GROUP 54C – Troubleshooting).

STEP 2. M.U.T.-III other system diagnosis code
Check if diagnosis code is set to the engine-ECU.

Q: Is the diagnosis code set?
YES : Troubleshoot the engine (Refer to GROUP 13A – Troubleshooting <1600> or GROUP 13B – Troubleshooting <1800-Petrol-DOHC, 2000> or GROUP 13C – Troubleshooting <1800-Diesel> or GROUP 13F – Troubleshooting <1800-Petrol-SOHC>).
NO : Go to Step 3.

STEP 3. Check the M.U.T.-III Diagnosis code for other systems
Check if the diagnosis code No. U0100 is set to ETACS-ECU.

Q: Is the diagnosis code set?
YES : Go to Step 4.
NO : Go to Step 5.

STEP 4. Diagnosis code recheck
Check again if the diagnosis code is set to the combination meter.
(1) Erase the diagnosis code.
(2) Turn the ignition switch from the LOCK (OFF) position to the ON position.
(3) Check if the diagnosis code is set.

Q: Is the diagnosis code set?
YES : Replace the engine-ECU.
NO : A poor connection, open circuit, or other intermittent malfunction in the CAN bus line between the combination meter and the engine-ECU. (Refer to GROUP 00 – How to Use Troubleshooting/Inspection Service Points - How to Cope with Intermittent Malfunction .)

STEP 5. Diagnosis code recheck
Check again if the diagnosis code is set to the combination meter.
(1) Erase the diagnosis code.
(2) Turn the ignition switch from the LOCK (OFF) position to the ON position.
(3) Check if the diagnosis code is set.

Q: Is the diagnosis code set?
YES : Replace the combination meter.
NO : A poor connection, open circuit, or other intermittent malfunction in the CAN bus line between the combination meter and the engine-ECU. (Refer to GROUP 00 – How to Use Troubleshooting/Inspection Service Points - How to Cope with Intermittent Malfunction .)

Code No.U0141 ETACS-ECU CAN timeout

⚠ CAUTION
- **If the diagnosis code No. U0141 is set, be sure to diagnose the CAN bus line.**
- **When replacing the ECU, always check that the communication circuit is normal.**

DIAGNOSTIC FUNCTION
If the signal from ETACS-ECU cannot be received, the combination meter sets the diagnosis code No. U0141.

JUDGMENT CRITERIA
With the statuses that the ignition switch is at ON position, system voltage is 10 – 16 V (data from ETACS-ECU), and there is no malfunction to the power supply fuse (IOD fuse), or odometer value is 80.5 km or more, if the communication with ETACS-ECU cannot be established for 2,500 ms or more, the combination meter determines that a problem has occurred.

PROBABLE CAUSES
- Malfunction of CAN bus line
- Malfunction of combination meter
- Malfunction of the ETACS-ECU

www.cargeek.ir

DIAGNOSIS PROCEDURE

STEP 1. M.U.T.-III CAN bus diagnostics
Use M.U.T.-III to diagnose the CAN bus lines.

Q: Is the check result normal?
YES : Go to Step 2.
NO : Repair the CAN bus lines. (Refer to GROUP 54C – Troubleshooting .)

STEP 2. M.U.T.-III diagnosis code for other systems
Check again if the diagnosis code is set to the ETACS-ECU.

Q: Is the diagnosis code set?
YES : Troubleshoot the ETACS-ECU. (Refer to GROUP 54A – ETACS-ECU – Troubleshooting .)
NO : Go to Step 3.

STEP 3. Check the M.U.T.-III Diagnosis code for other systems
Check if the diagnosis code No. U0141 is set to SRS-ECU.

Q: Is the diagnosis code set?
YES : Go to Step 4.
NO : Go to Step 5.

STEP 4. Diagnosis code recheck
Check again if the diagnosis code is set to the combination meter.
(1) Erase the diagnosis code.
(2) Turn the ignition switch from the LOCK (OFF) position to the ON position.
(3) Check if the diagnosis code is set.

Q: Is the diagnosis code set?
YES : Replace the ETACS-ECU.
NO : A poor connection, open circuit or other intermittent malfunction in the CAN bus line between the combination meter and the ETACS-ECU. (Refer to GROUP 00 – How to Use Troubleshooting/Inspection Service Points - How to Cope with Intermittent Malfunction .)

STEP 5. Diagnosis code recheck
Check again if the diagnosis code is set to the combination meter.
(1) Erase the diagnosis code.
(2) Turn the ignition switch from the LOCK (OFF) position to the ON position.
(3) Check if the diagnosis code is set.

Q: Is the diagnosis code set?
YES : Replace the combination meter.
NO : A poor connection, open circuit or other intermittent malfunction in the CAN bus line between the combination meter and the ETACS-ECU. (Refer to GROUP 00 – How to Use Troubleshooting/Inspection Service Points - How to Cope with Intermittent Malfunction .)

Code No.U0151 SRS-ECU CAN timeout

⚠ CAUTION
- **If the diagnosis code No. U0151 is set, be sure to diagnose the CAN bus line.**
- **When replacing the ECU, always check that the communication circuit is normal.**

DIAGNOSTIC FUNCTION
If the signal from SRS-ECU cannot be received, the combination meter sets the diagnosis code No. U0151.

JUDGMENT CRITERIA
With the statuses that the ignition switch is at ON position, system voltage is 10–16 V (data from ETACS-ECU), and there is no malfunction to the power supply fuse (IOD fuse), or odometer value is 80.5 km or more, if the communication with SRS-ECU cannot be established for 2,500 ms or more, the combination meter determines that a problem has occurred.

PROBABLE CAUSES
- Malfunction of CAN bus line
- Malfunction of the SRS-ECU
- Malfunction of combination meter

www.cargeek.ir

www.CarGeek.ir

DIAGNOSIS PROCEDURE

STEP 1. M.U.T.-III CAN bus diagnostics
Use the M.U.T.-III to diagnose the CAN bus lines.

Q: Is the check result normal?
YES : Go to Step 2.
NO : Repair the CAN bus line (Refer to GROUP 54C – Troubleshooting).

STEP 2. M.U.T.-III other system diagnosis code
Check again if the diagnosis code is set to the SRS-ECU.

Q: Is the diagnosis code set?
YES : Troubleshoot the SRS-ECU (Refer to GROUP 52B – Troubleshooting).
NO : Go to Step 3.

STEP 3. Check the M.U.T.-III Diagnosis code for other systems
Check if the diagnosis code No. U0151 is set to ETACS-ECU.

Q: Is the diagnosis code set?
YES : Go to Step 4.
NO : Go to Step 5.

STEP 4. Diagnosis code recheck
Check again if the diagnosis code is set to the combination meter.
(1) Erase the diagnosis code.
(2) Turn the ignition switch from the LOCK (OFF) position to the ON position.
(3) Check if the diagnosis code is set.

Q: Is the diagnosis code set?
YES : Replace SRS-ECU.
NO : A poor connection, open circuit, or other intermittent malfunction in the CAN bus line between the combination meter and SRS-ECU. (Refer to GROUP 00 – How to Use Troubleshooting/Inspection Service Points - How to Cope with Intermittent Malfunction .)

STEP 5. Diagnosis code recheck
Check again if the diagnosis code is set to the combination meter.
(1) Erase the diagnosis code.
(2) Turn the ignition switch from the LOCK (OFF) position to the ON position.
(3) Check if the diagnosis code is set.

Q: Is the diagnosis code set?
YES : Replace the combination meter.
NO : A poor connection, open circuit, or other intermittent malfunction in the CAN bus line between the combination meter and SRS-ECU. (Refer to GROUP 00 – How to Use Troubleshooting/Inspection Service Points - How to Cope with Intermittent Malfunction .)

Code No.U0164 A/C/Heater control unit CAN timeout

⚠ CAUTION
- **If the diagnosis code No. U0164 is set, be sure to diagnose the CAN bus line.**
- **When replacing the ECU, always check that the communication circuit is normal.**

DIAGNOSTIC FUNCTION
If the signal from A/C-ECU cannot be received, the combination meter sets the diagnosis code No. U0164.

JUDGMENT CRITERIA
With the statuses that the ignition switch is at ON position, system voltage is 10–16 V (data from ETACS-ECU), and there is no malfunction to the power supply fuse (IOD fuse), or odometer value is 80.5 km or more, if the communication with A/C-ECU cannot be established for 2,500 ms or more, the combination meter determines that a problem has occurred.

PROBABLE CAUSES
- Malfunction of CAN bus line
- Malfunction of the A/C-ECU
- Malfunction of combination meter

www.cargeek.ir

www.CarGeek.ir

DIAGNOSIS PROCEDURE

STEP 1. M.U.T.-III CAN bus diagnostics
Use the M.U.T.-III to diagnose the CAN bus lines.

Q: Is the check result normal?
YES : Go to Step 2.
NO : Repair the CAN bus line (Refer to GROUP 54C – Troubleshooting).

STEP 2. M.U.T.-III other system diagnosis code
Check if diagnosis code is set to the A/C-ECU.

Q: Is the diagnosis code set?
YES : Troubleshoot the A/C-ECU (Refer to GROUP 55A – Troubleshooting).
NO : Go to Step 3.

STEP 3. Check the M.U.T.-III Diagnosis code for other systems
Check if the diagnosis code No. U0164 is set to ETACS-ECU.

Q: Is the diagnosis code set?
YES : Go to Step 4.
NO : Go to Step 5.

STEP 4. Diagnosis code recheck
Check again if the diagnosis code is set to the combination meter.
(1) Erase the diagnosis code.
(2) Turn the ignition switch from the LOCK (OFF) position to the ON position.
(3) Check if the diagnosis code is set.

Q: Is the diagnosis code set?
YES : Replace the A/C-ECU.
NO : A poor connection, open circuit, or other intermittent malfunction in the CAN bus line between the combination meter and A/C-ECU. (Refer to GROUP 00 – How to Use Troubleshooting/Inspection Service Points - How to Cope with Intermittent Malfunction .)

STEP 5. Diagnosis code recheck
Check again if the diagnosis code is set to the combination meter.
(1) Erase the diagnosis code.
(2) Turn the ignition switch from the LOCK (OFF) position to the ON position.
(3) Check if the diagnosis code is set.

Q: Is the diagnosis code set?
YES : Replace the combination meter.
NO : A poor connection, open circuit, or other intermittent malfunction in the CAN bus line between the combination meter and A/C-ECU. (Refer to GROUP 00 – How to Use Troubleshooting/Inspection Service Points - How to Cope with Intermittent Malfunction .)

Code No.U0168 KOS/WCM CAN timeout

⚠ CAUTION
- **If diagnosis code No. U0168 is set, be sure to diagnose the CAN bus line.**
- **When replacing the ECU, always check that the communication circuit is normal.**

DIAGNOSTIC FUNCTION
If the signal from KOS-ECU or WCM cannot be received, the combination meter sets the diagnosis code No. U0168.

JUDGMENT CRITERIA
With the statuses that the ignition switch is at ON position, system voltage is 10 – 16 V (data from ETACS-ECU), and there is no malfunction to the power supply fuse (IOD fuse), or odometer value is 80.5 km or more, if the communication with KOS-ECU or WCM cannot be established for 2,500 ms or more, the combination meter determines that a problem has occurred.

PROBABLE CAUSES
- Malfunction of CAN bus line
- Malfunction of the KOS-ECU
- Malfunction of the WCM
- Malfunction of combination meter

www.cargeek.ir

www.CarGeek.ir

DIAGNOSIS PROCEDURE

STEP 1. M.U.T.-III CAN bus diagnostics
Use the M.U.T.-III to diagnose the CAN bus lines.

Q: Is the check result normal?
YES : Go to Step 2.
NO : Repair the CAN bus line (Refer to GROUP 54C – Troubleshooting).

STEP 2. M.U.T.-III other system diagnosis code
Check again if the diagnosis code is set to the KOS-ECU <vehicles with KOS> or WCM <vehicles with WCM>.

Q: Is the diagnosis code set?
Set to the KOS-ECU. : Troubleshoot the KOS. Refer to GROUP 42B – Diagnosis Code Chart .
Set to the WCM. : Troubleshoot the WCM. Refer to GROUP 42C – Diagnosis Code Chart .
The diagnosis code is not set. : Go to Step 3.

STEP 3. Check the M.U.T.-III Diagnosis code for other systems
Check if the diagnosis code No. U0168 is set to ETACS-ECU.

Q: Is the diagnosis code set?
YES : Go to Step 4.
NO : Go to Step 5.

STEP 4. Diagnosis code recheck
Check again if the diagnosis code is set to the combination meter.
(1) Erase the diagnosis code.
(2) Turn the ignition switch from the LOCK (OFF) position to the ON position.
(3) Check if the diagnosis code is set.

Q: Is the diagnosis code set?
YES : Replace KOS-ECU or WCM.
NO : A poor connection, open circuit, or other intermittent malfunction in the CAN bus line between the combination meter and KOS-ECU or WCM. (Refer to GROUP 00 – How to Use Troubleshooting/Inspection Service Points - How to Cope with Intermittent Malfunction .)

STEP 5. Diagnosis code recheck
Check again if the diagnosis code is set to the combination meter.
(1) Erase the diagnosis code.
(2) Turn the ignition switch from the LOCK (OFF) position to the ON position.
(3) Check if the diagnosis code is set.

Q: Is the diagnosis code set?
YES : Replace the combination meter.
NO : A poor connection, open circuit, or other intermittent malfunction in the CAN bus line between the combination meter and KOS-ECU or WCM. (Refer to GROUP 00 – How to Use Troubleshooting/Inspection Service Points - How to Cope with Intermittent Malfunction .)

Code No.U0184 Audio CAN timeout

⚠ CAUTION
- **If the diagnosis code No. U0184 is set, be sure to diagnose the CAN bus line.**
- **When replacing the ECU, always check that the communication circuit is normal.**

DIAGNOSTIC FUNCTION
When the signals from radio and CD player cannot be received, the combination meter sets the diagnosis code No. U0184.

JUDGMENT CRITERIA
With the statuses that the ignition switch is at ON position, system voltage is 10 – 16 V (data from ETACS-ECU), and there is no malfunction to the power supply fuse (IOD fuse), or odometer value is 80.5 km or more, if the communications with radio and CD player cannot be established for 2,500 ms or more, the combination meter determines that a problem has occurred.

PROBABLE CAUSES
- Malfunction of CAN bus line
- Malfunction of combination meter
- Malfunctions of radio and CD player

www.cargeek.ir

www.CarGeek.ir

DIAGNOSIS PROCEDURE

STEP 1. M.U.T.-III CAN bus diagnostics
Use the M.U.T.-III to diagnose the CAN bus lines.

Q: Is the check result normal?
YES : Go to Step 2.
NO : Repair the CAN bus line (Refer to GROUP 54C – Troubleshooting).

STEP 2. M.U.T.-III other system diagnosis code
Check again if the diagnosis code is set to the radio and CD player.

Q: Is the diagnosis code set?
YES : Troubleshoot the radio and CD player. Refer to .
NO : Go to Step 3.

STEP 3. Check the M.U.T.-III Diagnosis code for other systems
Check if the diagnosis code No. U0184 is set to ETACS-ECU.

Q: Is the diagnosis code set?
YES : Go to Step 4.
NO : Go to Step 5.

STEP 4. Diagnosis code recheck
Check again if the diagnosis code is set to the combination meter.
(1) Erase the diagnosis code.
(2) Turn the ignition switch from the LOCK (OFF) position to the ON position.
(3) Check if the diagnosis code is set.

Q: Is the diagnosis code set?
YES : Replace the radio and CD player.
NO : A poor connection, open circuit, or other intermittent malfunction in the CAN bus line between the combination meter and radio and CD player. (Refer to GROUP 00 – How to Use Troubleshooting/Inspection Service Points - How to Cope with Intermittent Malfunction .)

STEP 5. Diagnosis code recheck
Check again if the diagnosis code is set to the combination meter.
(1) Erase the diagnosis code.
(2) Turn the ignition switch from the LOCK (OFF) position to the ON position.
(3) Check if the diagnosis code is set.

Q: Is the diagnosis code set?
YES : Replace the combination meter.
NO : A poor connection, open circuit, or other intermittent malfunction in the CAN bus line between the combination meter and radio and CD player. (Refer to GROUP 00 – How to Use Troubleshooting/Inspection Service Points - How to Cope with Intermittent Malfunction .)

Code No.U0245 Audio visual navigation unit CAN timeout

⚠ CAUTION
- **If the diagnosis code No. U0245 is set, be sure to diagnose the CAN bus line.**
- **When replacing the ECU, always check that the communication circuit is normal.**

DIAGNOSTIC FUNCTION
When the signals from CAN box unit cannot be received, the combination meter sets the diagnosis code No. U0245.

JUDGMENT CRITERIA
With the statuses that the ignition switch is at ON position, system voltage is 10 – 16 V (data from ETACS-ECU), and there is no malfunction to the power supply fuse (IOD fuse), or odometer value is 80.5 km or more, if the communications with CAN box unit cannot be established for 2,500 ms or more, the combination meter determines that a problem has occurred.

PROBABLE CAUSES
- Malfunction of CAN bus line
- Malfunction of combination meter
- Malfunctions of CAN box unit

www.cargeek.ir

www.CarGeek.ir

DIAGNOSIS PROCEDURE

STEP 1. M.U.T.-III CAN bus diagnostics
Use the M.U.T.-III to diagnose the CAN bus lines.

Q: Is the check result normal?
YES : Go to Step 2.
NO : Repair the CAN bus line (Refer to GROUP 54C – Troubleshooting).

STEP 2. M.U.T.-III other system diagnosis code
Check again if the diagnosis code is set to the CAN box unit.

Q: Is the diagnosis code set?
YES : Perform the diagnosis code troubleshooting to the CAN box unit. Refer to .
NO : Go to Step 3.

STEP 3. Check the M.U.T.-III Diagnosis code for other systems
Check if the diagnosis code No. U0245 is set to ETACS-ECU.

Q: Is the diagnosis code set?
YES : Go to Step 4.
NO : Go to Step 5.

STEP 4. Diagnosis code recheck
Check again if the diagnosis code is set to the combination meter.
(1) Erase the diagnosis code.
(2) Turn the ignition switch from the LOCK (OFF) position to the ON position.
(3) Check if the diagnosis code is set.

Q: Is the diagnosis code set?
YES : Replace the CAN box unit.
NO : A poor connection, open circuit, or other intermittent malfunction in the CAN bus line between the combination meter and the CAN box unit. (Refer to GROUP 00 – How to Use Troubleshooting/Inspection Service Points - How to Cope with Intermittent Malfunction .)

STEP 5. Diagnosis code recheck
Check again if the diagnosis code is set to the combination meter.
(1) Erase the diagnosis code.
(2) Turn the ignition switch from the LOCK (OFF) position to the ON position.
(3) Check if the diagnosis code is set.

Q: Is the diagnosis code set?
YES : Replace the combination meter.
NO : A poor connection, open circuit, or other intermittent malfunction in the CAN bus line between the combination meter and the CAN box unit. (Refer to GROUP 00 – How to Use Troubleshooting/Inspection Service Points - How to Cope with Intermittent Malfunction .)

Code No.U1415 Coding not completed/Data fail

⚠ CAUTION
- **If the diagnosis code No. U1415 is set, diagnose the CAN bus lines.**
- **When replacing the ECU, always check that the communication circuit is normal.**

DIAGNOSTIC FUNCTION
If the vehicle information data is not registered to the combination meter, the combination meter sets the diagnosis code No. U1415.

JUDGMENT CRITERIA
With the global coding counter value "0," if all the global coding data (vehicle information) are not stored, the combination meter determines that a problem has occurred.

PROBABLE CAUSES
- Malfunction of CAN bus line
- Malfunction of combination meter
- Malfunction of the ETACS-ECU

DIAGNOSIS PROCEDURE

STEP 1. M.U.T.-III CAN bus diagnostics
Use the M.U.T.-III to diagnose the CAN bus lines.

Q: Is the check result normal?
YES : Go to Step 2.
NO : Repair the CAN bus line (Refer to GROUP 54C – Troubleshooting).

STEP 2. M.U.T.-III other system diagnosis code
Check if diagnosis code is set to the ETACS-ECU.

Q: Is the diagnosis code set?

www.cargeek.ir

YES : Troubleshoot the ETACS-ECU. Refer to .
NO : Go to Step 3.

STEP 3. Check whether the diagnosis code is reset.

Check again if the diagnosis code is set to the combination meter.

(1) Erase the diagnosis code.
(2) Turn the ignition switch from "LOCK" (OFF) position to "ON" position.
(3) Check if diagnosis code is set.

Q: Is the diagnosis code set?
YES : Replace the combination meter.
NO : The trouble can be an intermittent malfunction (Refer to GROUP 00 – How to use Troubleshooting/Inspection Service Points – How to Cope with Intermittent Malfunction).

TROUBLE SYMPTOM CHART

M1540200800692

⚠ CAUTION

- **During diagnosis, a diagnosis code associated with other system may be set when the ignition switch is turned on with connector(s) disconnected. On completion, confirm all systems for diagnosis code(s). If diagnosis code(s) are set, erase them all.**
- **If the combination meter needs to be replaced as a result of troubleshooting, the current driving distance and elapsed days must be entered into the meter after the replacement in order to be used for service reminder function. Therefore, read "Integrated mileage for reminder," "Integrated days for reminder," "Mileage until Extra reminder," "Months until Extra reminder," and "Current schedule" from the meter before the replacement using the special function of M.U.T.-III, and note them. For the operation method of M.U.T.-III, refer to . If "Integrated mileage for reminder" or "Integrated days for reminder" cannot be read from the meter using M.U.T.-III, use the following method.**
  a. **As for the driving distance for check warning, use the driving distance displayed on the multi information display.**
  b. **As for the elapsed days for check warning, calculate the number of elapsed days from the delivery date to the customer (service reminder function start date) and current date.**

Trouble symptom	Inspection Procedure No.	Reference page
Power supply circuit check	1	
The odometer and the trip meter are not displayed.	2	
No needle meters work.	3	
If the ignition switch is turned to the ON position, the indicator and warning lamps do not illuminate normally.	4	
The speedometer does not work (the other meters work).	5	
The tachometer does not work (the other meters work).	6	
Buzzers do not sound normally.	7	
The combination meter warning display does not illuminate normally or the multi information display is not displayed normally.	8	
The multi information display screen cannot be changed with the operation of the meter information switch.	9	
Fuel gauge does not work (other meters work)	10	
Seat belt reminder function does not work normally.	11	

www.cargeek.ir

www.CarGeek.ir

SYMPTOM PROCEDURES

Inspection Procedure 1: Power supply circuit check
Inspection Procedure 2: The odometer and the trip meter are not displayed.
Inspection Procedure 3: No needle meters work.
Inspection Procedure 4: If the ignition switch is turned to the ON position, the indicator and warning lamps do not illuminate normally.

www.cargeek.ir

www.cargeek.ir

Combination Meter Power Source Circuit

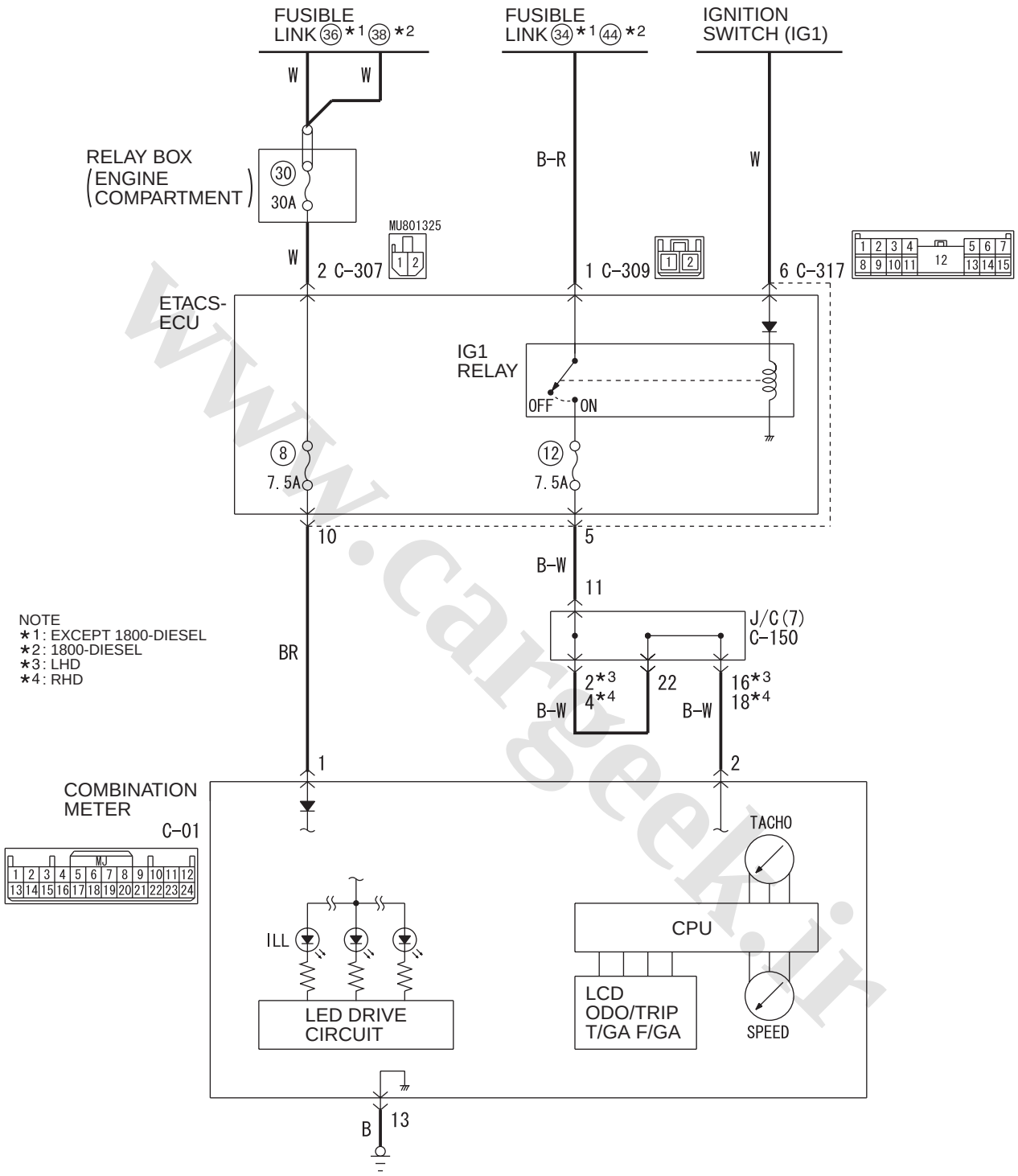

Wire colour code
B : Black LG : Light green G : Green L : Blue W : White Y : Yellow SB : Sky blue
BR : Brown O : Orange GR : Grey R : Red P : Pink V : Violet PU : Purple SI : Silver

WBH54E054A

www.cargeek.ir

www.CarGeek.ir

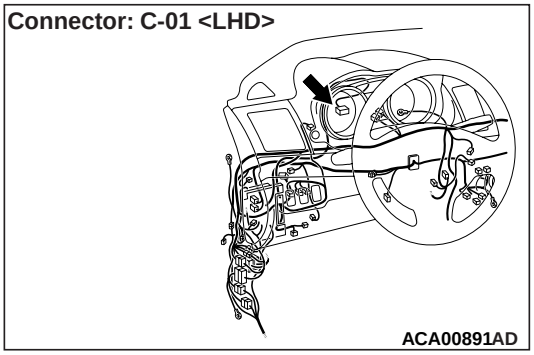

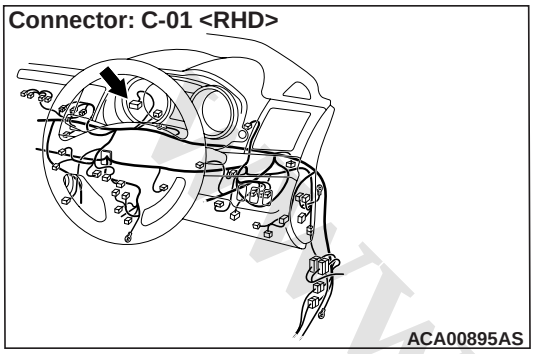

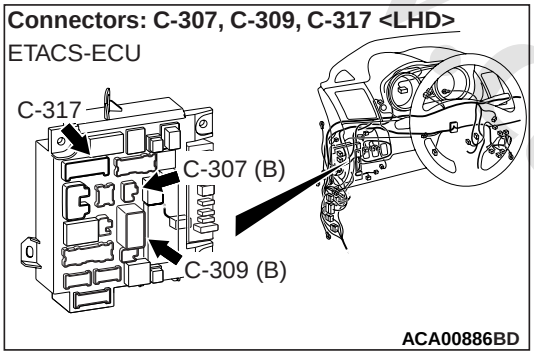

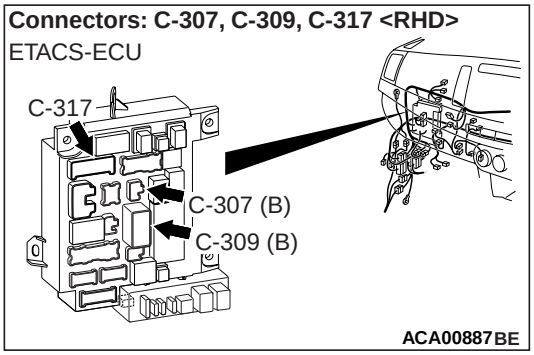

COMMENTS ON TROUBLE SYMPTOM

If the odometer and trip meter is not displayed or no needle meters work, power supply to the combination meter, or the combination meter itself may have a problem.

PROBABLE CAUSES

- Damaged harness wires and connectors
- Malfunction of combination meter

DIAGNOSIS PROCEDURE

STEP 1. M.U.T.-III diagnosis code

Check if diagnosis code is set to the combination meter.

Q: Is the diagnosis code set?

YES : Troubleshoot the combination meter. Refer to .

NO : Go to Step 2.

STEP 2. Connector check: C-01 combination meter connector

Q: Is the check result normal?

YES : Go to Step 3.

NO : Repair the defective connector.

STEP 3. Voltage measurement at the C-01 combination meter connector

(1) Disconnect the connector, and measure at the wiring harness side.
(2) Turn the ignition switch to the LOCK (OFF) position.
(3) Measure the voltage between the C-01 combination meter connector terminal No. 1 and the body earth.

OK: System voltage

Q: Is the check result normal?

YES : Go to Step 5.

NO : Go to Step 4.

STEP 4. Check the wiring harness between the fusible link No. (36) <Except 1800-Diesel> or (38) <1800-Diesel> and the C-01 combination meter connector terminal No. 1.

Check the power supply line for open circuit.

NOTE: Before the wiring harness check, check the ETACS-ECU connectors C-307 and C-317, and repair them if necessary.

Q: Is the check result normal?

YES : The trouble can be an intermittent malfunction (Refer to GROUP 00 – How to Cope with Intermittent Malfunction).

NO : Repair the wiring harness.

STEP 5. Voltage measurement at the C-01 combination meter connector

(1) Disconnect the connector, and measure at the wiring harness side.
(2) Turn the ignition switch to the ON position.
(3) Measure the voltage between the C-01

www.cargeek.ir

combination meter connector terminal No. 2 and the body earth.

OK: System voltage

Q: Is the check result normal?
YES : Go to Step 8.
NO : Go to Step 6.

STEP 6. M.U.T.-III other system service data
Check the input signal from the ignition switch (IG1) in the ETACS-ECU.
- Turn the ignition switch to the ON position.

Item No.	Item name	Normal condition
Item 254	IG voltage	System voltage

OK: Normal condition is displayed.

Q: Is the check result normal?
YES : Go to Step 7.
NO : Troubleshoot the ETACS-ECU. Refer to Inspection Procedure 2 "The ignition switch (IG1) signal is not received." .

STEP 7. Check the wiring harness between the fusible link No. (34) <Except 1800-Diesel> or (44) <1800-Diesel> and the C-01 combination meter connector terminal No. 2.
Check the power supply line for open circuit.

NOTE: Before the wiring harness check, check the ETACS-ECU connectors C-309, C-317 and joint connector C-150, and repair them if necessary.

Q: Is the check result normal?
YES : The trouble can be an intermittent malfunction (Refer to GROUP 00 – How to use Troubleshooting/Inspection Service Points – How to Cope with Intermittent Malfunction).
NO : Repair the wiring harness.

STEP 8. Resistance measurement at the C-01 combination meter connector
(1) Disconnect the connector, and measure at the wiring harness side.
(2) Measure the resistance between the C-01 combination meter connector terminal No. 13 and the body earth.

OK: Continuity exists (2 Ω or less)

Q: Is the check result normal?
YES : Go to Step 10.
NO : Go to Step 9.

STEP 9. Wiring harness check between the C-01 combination meter connector terminal No. 13 and the body earth
Check the earth wires for open circuit.

Q: Is the check result normal?
YES : The trouble can be an intermittent malfunction (Refer to GROUP 00 – How to use Troubleshooting/Inspection Service Points – How to Cope with Intermittent Malfunction).
NO : Repair the wiring harness.

STEP 10. Retest the system

Q: Is the check result normal?
YES : The trouble can be an intermittent malfunction (Refer to GROUP 00 – How to use Troubleshooting/Inspection Service Points – How to Cope with Intermittent Malfunction).
NO : Replace the combination meter.

Inspection Procedure 5: The speedometer does not work (the other meters work).

COMMENTS ON TROUBLE SYMPTOM
If only the speedometer does not operate, the ABS <vehicles with ABS> or ASC <vehicles with ASC> system and combination meter may have a problem.

PROBABLE CAUSES
- Malfunction of ABS-ECU <vehicles with ABS>
- Malfunction of ASC-ECU <vehicles with ASC>
- Malfunction of combination meter

DIAGNOSIS PROCEDURE

STEP 1. M.U.T.-III CAN bus diagnostics
Use the M.U.T.-III to diagnose the CAN bus lines.

Q: Is the check result normal?
YES : Go to Step 2.
NO : Repair the CAN bus line (Refer to GROUP 54C – Troubleshooting). Complete the CAN troubleshooting, and then go to Step 6.

www.cargeek.ir

www.CarGeek.ir

STEP 2. M.U.T.-III diagnosis code
Check if diagnosis code is set to the combination meter.

Q: Is the diagnosis code set?
YES : Troubleshoot the combination meter. Refer to . Complete the combination meter troubleshooting, then go to Step 6.
NO : Go to Step 3.

STEP 3. M.U.T.-III other system diagnosis code
Check if diagnosis code is set to the ABS <vehicles with ABS> or ASC <vehicles with ASC>.

Q: Is the diagnosis code set to the any of the above?
Set to the ABS-ECU. : Troubleshoot the ABS. Refer to GROUP 35B – Troubleshooting .
Set to the ASC-ECU. : Troubleshoot the ASC. Refer to GROUP 35C – Troubleshooting .
The diagnosis code is not set. : Go to Step 4.

STEP 4. M.U.T.-III data list
- Item 80: Speedometer (Refer to).

Q: Is the check result normal?
YES : Go to Step 5.
NO : Replace the combination meter, and then go to Step 6.

STEP 5. M.U.T.-III actuator test
- Item 1: Speedometer (Refer to).

OK: The speedometer operates up to the set position.

Q: Is the check result normal?
YES : Go to Step 6.
NO : Replace the combination meter, and then go to Step 6.

STEP 6. Retest the system
Check that the speedometer works normally.

Q: Is the check result normal?
YES : The procedure is complete.
NO : Go to Step 1.

Inspection Procedure 6: The tachometer does not work (the other meters work).

COMMENTS ON TROUBLE SYMPTOM
If only the tachometer does not operate, the ignition signal from the engine-ECU may not be received or the combination meter may have a problem.

PROBABLE CAUSES
- Malfunction of combination meter
- Malfunction of engine-ECU

DIAGNOSIS PROCEDURE

STEP 1. M.U.T.-III CAN bus diagnostics
Use the M.U.T.-III to diagnose the CAN bus lines.

Q: Is the check result normal?
YES : Go to Step 2.
NO : Repair the CAN bus line (Refer to GROUP 54C – Troubleshooting). Complete the CAN troubleshooting, and then go to Step 6.

STEP 2. M.U.T.-III diagnosis code
Check if diagnosis code is set to the combination meter.

Q: Is the diagnosis code set?
YES : Troubleshoot the combination meter. Refer to . Complete the combination meter troubleshooting, then go to Step 6.
NO : Go to Step 3.

STEP 3. M.U.T.-III other system diagnosis code
Check if diagnosis code is set to the engine-ECU.

Q: Is the diagnosis code set?
YES : Troubleshoot the engine (Refer to GROUP 13A – Troubleshooting <1600> or GROUP 13B – Troubleshooting <1800-Petrol-DOHC, 2000> or GROUP 13C – Troubleshooting <1800-Diesel> or GROUP 13F – Troubleshooting <1800-Petrol-SOHC>). Complete the engine troubleshooting, and then go to Step 6.
NO : Go to Step 4.

STEP 4. M.U.T.-III data list
- Item 87: Tachometer (Refer to).

Q: Is the check result normal?
YES : Go to Step 5.
NO : Replace the combination meter, and then go to Step 6.

www.cargeek.ir

STEP 5. M.U.T.-III actuator test

- Item 2: Tachometer (Refer to).

  OK: The tachometer operates up to the set position.

Q: Is the check result normal?

YES : Go to Step 6.

NO : Replace the combination meter, and then go to Step 6.

STEP 6. Retest the system

Check that the tachometer works normally.

Q: Is the check result normal?

YES : The procedure is complete.

NO : Go to Step 1.

Inspection Procedure 7: Buzzers do not sound normally.

⚠ CAUTION

Before replacing the combination meter, be sure to check that the power supply circuit, earth circuit, and communication circuit are normal.

COMMENTS ON TROUBLE SYMPTOM

When the following signals are received via the CAN communication or signal line, the combination meter sounds the incorporated buzzer according to the each pattern.

Seat belt reminder function

- Ignition switch ON signal
- Driver's seat belt switch signal
- Passenger's seat belt switch signal
- Vehicles speed signal

Lamp reminder buzzer function

- Ignition switch OFF signal
- Lighting switch ON signal
- Driver's door switch ON signal

Door-ajar warning buzzer function

- Ignition switch ON signal
- Any door switch or tailgate switch ON signal
- Vehicles speed signal

Freeze warning buzzer function

- Ignition switch ON signal
- Ambient temperature signal

Parking brake reminder buzzer function

- Ignition switch ON signal
- Parking brake switch
- Vehicles speed signal

Multi information display interrupt display buzzer

- Display condition signal of information display from each warning (When there is a fixed buzzer sounding pattern for each warning, that pattern has the priority.)

Meter information switch operation buzzer

- ON signal for meter information switch

Turn-signal lamp buzzer function

- Turn-signal lamp switch ON signal

A/T shift cancel buzzer, paddle shift cancel prohibition buzzer, rest reminder buzzer, ETACS-ECU function customise buzzer, sunroof buzzer function, A/C operation buzzer, audio operation buzzer

- Sounding request signal from the ETACS-ECU

If the buzzer does not sound normally, the connector(s) and wiring harness in the CAN bus lines, or the ETACS-ECU or the combination meter may have a problem.

PROBABLE CAUSES

- Malfunction of combination meter
- Damaged harness wires and connectors

DIAGNOSIS PROCEDURE

STEP 1. M.U.T.-III CAN bus diagnostics

Use the M.U.T.-III to diagnose the CAN bus lines.

Q: Is the check result normal?

YES : Go to Step 2.

NO : Repair the CAN bus line (Refer to GROUP 54C – Troubleshooting).

STEP 2. M.U.T.-III diagnosis code

Check if diagnosis code is set to the combination meter.

Q: Is the diagnosis code set?

YES : Refer to .

NO : Go to Step 3.

STEP 3. M.U.T.-III other system diagnosis code

Check if diagnosis code is set to the engine-ECU, CVT-ECU, A/T-ECU, ABS-ECU, ASC-ECU, audio, ETACS-ECU or A/C-ECU or heater control unit.

Q: Is the diagnosis code set to the any of the above?

www.cargeek.ir

www.CarGeek.ir

Set to the engine-ECU. : Troubleshoot the engine (Refer to GROUP 13A – Troubleshooting <1600> or GROUP 13B – Troubleshooting <1800-Petrol-DOHC, 2000> or GROUP 13C – Troubleshooting <1800-Diesel> or GROUP 13F – Troubleshooting <1800-Petrol-SOHC>).

Set to the CVT-ECU. : Troubleshoot the CVT. Refer to GROUP 23A – Diagnosis code chart .

Set to the A/T-ECU. : Troubleshoot the A/T. Refer to GROUP 23C – Diagnosis code chart .

Set to the ABS-ECU. : Troubleshoot the ABS. Refer to GROUP 35B – Troubleshooting .

Set to the ASC-ECU. : Troubleshoot the ASC. Refer to GROUP 35C – Troubleshooting .

Set to the audio. : Troubleshoot the audio. Refer to .

Set to the ETACS-ECU. : Troubleshoot the ETACS. Refer to .

Set to the A/C-ECU/Heater control unit. : Troubleshoot the A/C-ECU/Heater control unit. Refer to GROUP 55A – Troubleshooting .

The diagnosis code is not set. : Go to Step 4.

STEP 4. Check by M.U.T.-III "Special Function"

Using M.U.T.-III, select "Test" from the special function of the combination meter. Execute the following item to check the buzzer.

- Item 3: Buzzer(AUTO)

Q: Is the check result normal?

YES : Go to Step 5.

NO : Replace the combination meter.

STEP 5. Retest the system

Check that the buzzers sound normally.

Q: Is the check result normal?

YES : The trouble can be an intermittent malfunction (Refer to GROUP 00 – How to use Troubleshooting/Inspection Service Points – How to Cope with Intermittent Malfunction).

NO : Replace the combination meter.

Inspection Procedure 8: The combination meter warning display does not illuminate normally or the multi information display is not displayed normally.

⚠ CAUTION

Before replacing the combination meter, be sure to check that the power supply circuit, earth circuit, and communication circuit are normal.

COMMENTS ON TROUBLE SYMPTOM

When the signal from each ECU is received via the CAN communication, the combination meter illuminates the corresponding display lamp or warning lamp, or has the multi information display to display corresponding information.

If the lamps do not illuminate or the multi information display does not display normally, the wiring harness and connector(s) in the CAN bus lines, or the ETACS-ECU or the combination meter may have a problem.

PROBABLE CAUSES

- Malfunction of combination meter
- Damaged harness wires and connectors

DIAGNOSIS PROCEDURE

STEP 1. M.U.T.-III CAN bus diagnostics

Use the M.U.T.-III to diagnose the CAN bus lines.

Q: Is the check result normal?

YES : Go to Step 2.

NO : Repair the CAN bus line (Refer to GROUP 54C – Troubleshooting).

STEP 2. M.U.T.-III diagnosis code

Check again if the diagnosis code is set to the combination meter.

Q: Is the diagnosis code set?

YES : Refer to .

NO : Go to Step 3.

STEP 3. M.U.T.-III other system diagnosis code

Check again if the diagnosis code is set to the engine-ECU, CVT-ECU, A/T-ECU, ABS-ECU, ASC-ECU, EPS-ECU, KOS-ECU, SRS-ECU, headlamp automatic levelling-ECU, ETACS-ECU and A/C-ECU or heater control unit.

Q: Is the diagnosis code set to the any of the above?

www.cargeek.ir

www.CarGeek.ir

Set to the engine-ECU. : Troubleshoot the engine (Refer to GROUP 13A – Troubleshooting <1600> or GROUP 13B – Troubleshooting <1800-Petrol-DOHC, 2000> or GROUP 13C – Troubleshooting <1800-Diesel> or GROUP 13F – Troubleshooting <1800-Petrol-SOHC>).

Set to the CVT-ECU. : Troubleshoot the CVT. Refer to GROUP 23A – Diagnosis code chart .

Set to the A/T-ECU. : Troubleshoot the A/T. Refer to GROUP 23C – Diagnosis code chart .

Set to the ABS-ECU. : Troubleshoot the ABS. Refer to GROUP 35B – Troubleshooting .

Set to the ASC-ECU. : Troubleshoot the ASC. Refer to GROUP 35C – Troubleshooting .

Set to the EPS-ECU. : Troubleshoot the EPS. Refer to GROUP 37B – Troubleshooting .

Set to the KOS-ECU. : Troubleshoot the KOS. Refer to GROUP 42B – Troubleshooting .

Set to the SRS-ECU. : Troubleshoot the SRS. Refer to GROUP 52B – Troubleshooting .

Set to the headlamp automatic levelling-ECU. : Troubleshoot the AFS. Refer to .

Set to the ETACS-ECU. : Troubleshoot the ETACS. Refer to .

Set to the A/C-ECU/Heater control unit. : Troubleshoot the A/C-ECU/Heater control unit. Refer to GROUP 55A – Troubleshooting .

The diagnosis code is not set. : Go to Step 4.

STEP 4. M.U.T.-III actuator test

Perform the actuator test, and check that warning lamps are illuminated normally.

- Item 7: Indicator1
- Item 8: Indicator2
- Item 9: Indicator3
- Item 10: Indicator4

Q: Is the check result normal?

YES : Go to Step 5.

NO : Replace the combination meter.

STEP 5. Check by M.U.T.-III "Special Function"

Using M.U.T.-III, select "Test" from the special function of the combination meter. Execute the following item to check the liquid crystal display.

- Item 2: LCD(AUTO)

Q: Is the check result normal?

YES : Go to Step 6.

NO : Replace the combination meter.

STEP 6. Retest the system

Check that display lamps or warning lamps are illuminated normally, or multi information display is displayed normally.

Q: Is the check result normal?

YES : The trouble can be an intermittent malfunction (Refer to GROUP 00 – How to use Troubleshooting/Inspection Service Points – How to Cope with Intermittent Malfunction).

NO : Replace the combination meter.

www.cargeek.ir

www.CarGeek.ir

Inspection Procedure 9: The multi information display screen cannot be changed with the operation of the meter information switch.

⚠ CAUTION

Before replacing the combination meter, be sure to check that the power supply circuit, earth circuit, and communication circuit are normal.

Meter Information Switch Circuit

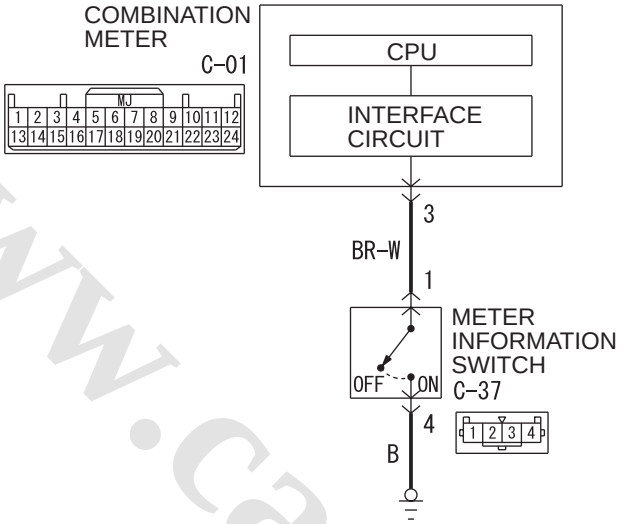

Wire colour code
B : Black LG : Light green G : Green L : Blue W : White Y : Yellow SB : Sky blue
BR : Brown O : Orange GR : Grey R : Red P : Pink V : Violet PU : Purple SI : Silver

W8G54X055A

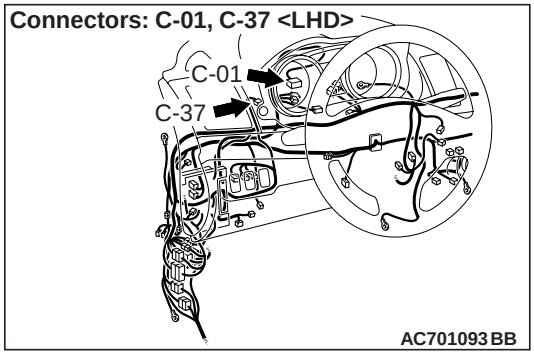

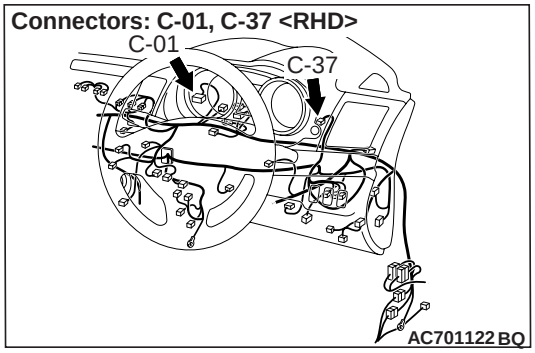

COMMENTS ON TROUBLE SYMPTOM

When the signal from the meter information switch is received, the combination meter switches the multi information display screen. If the multi information display screen does not switch normally, the meter information switch, wiring harness, connector(s), or combination meter may have a problem.

PROBABLE CAUSES

- Malfunction of meter information switch
- Malfunction of combination meter
- Damaged harness wires and connectors

DIAGNOSIS PROCEDURE

STEP 1. M.U.T.-III diagnosis code

Check if diagnosis code is set to the combination meter.

Q: Is the diagnosis code set?

YES : Refer to .

NO : Go to Step 2.

www.cargeek.ir

STEP 2. Connector check: C-37 meter information switch connector

Q: Is the check result normal?
YES : Go to Step 3.
NO : Repair the connector.

STEP 3. Meter information switch check
Check the meter information switch. Refer to .

Q: Is the check result normal?
YES : Go to Step 4.
NO : Replace the meter information switch.

STEP 4. Resistance measurement at the C-37 meter information switch connector
(1) Disconnect the meter information switch connector, and then measure at the wiring harness side.
(2) Measure the resistance from C-37 meter information switch connector terminal No. 4 to body earth.

OK: Continuity exists (2 Ω or less)

Q: Is the check result normal?
YES : Go to Step 6.
NO : Go to Step 5.

STEP 5. Check the wiring harness between the C-37 meter information switch connector terminal No. 4 and the body earth.
Check the earth wires for open circuit.

Q: Is the check result normal?
YES : Go to Step 8.
NO : Repair the wiring harness.

STEP 6. Connector check: C-01 combination meter connector

Q: Is the check result normal?
YES : Go to Step 7.
NO : Repair the connector.

STEP 7. Check the wiring harness between the C-01 combination meter connector terminal No. 3 and the C-37 meter information switch terminal No. 1.
Check the output lines for open circuit and short circuit.

Q: Is the check result normal?
YES : Go to Step 8.
NO : Repair the wiring harness.

STEP 8. Retest the system
Check that the multi information display screen switches normally when the meter information switch is operated.

Q: Is the check result normal?
YES : The trouble can be an intermittent malfunction (Refer to GROUP 00 – How to use Troubleshooting/Inspection Service Points – How to Cope with Intermittent Malfunction).
NO : Replace the combination meter.

Inspection Procedure 10: Fuel Gauge does not work (other meters work).

COMMENTS ON TROUBLE SYMPTOM
If only the fuel gauge does not operate, the fuel pump and gauge assembly, the fuel gauge unit (sub) or the combination meter may be defective.

PROBABLE CAUSES
- Malfunction of fuel pump and gauge assembly
- Malfunction of the fuel gauge unit (sub)
- Malfunction of combination meter

DIAGNOSIS PROCEDURE

STEP 1. Check the diagnosis code.
Check if diagnosis code No. B1201 is set.

Q: Is the diagnosis code No. B1201 set?
YES : Perform the troubleshooting of when the diagnosis code is set (Refer to).
NO : Go to Step 2.

STEP 2. fuel pump and gauge assembly and fuel gauge unit check
Check the fuel pump and gauge assembly and fuel gauge unit. Refer to .

Q: Is the check result normal?
YES : Go to Step 3.
NO : Replace the fuel pump and gauge assembly and fuel gauge unit.

www.cargeek.ir

www.CarGeek.ir

STEP 3. Retest the system.
Check that the fuel gauge works normally.

Q: Is the check result normal?

YES : The procedure is complete.
NO : Replace the combination meter.

Inspection Procedure 11: Seat belt reminder function does not work normally.

⚠ CAUTION
Whenever the ECU is replaced, ensure that the input and output signal circuits are normal.

Connector: C-01 <LHD>

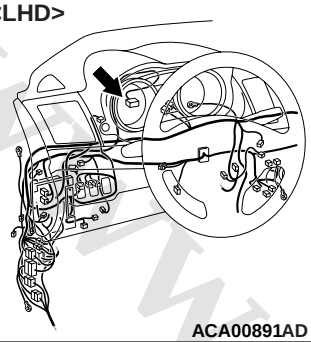

ACA00891AD

Connector: C-01 <RHD>

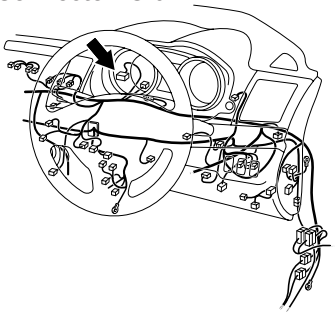

ACA00895AS

Connector: C-10 <LHD>

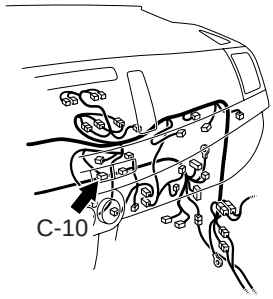

ACA00892AC

Connector: C-10 <RHD>

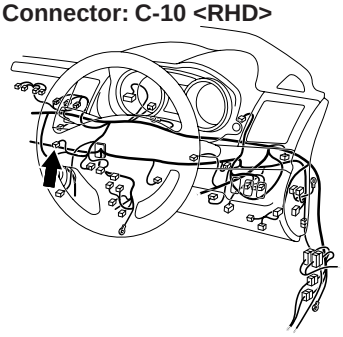

ACA00895AD

Connectors: D-29, D-33 <LHD>

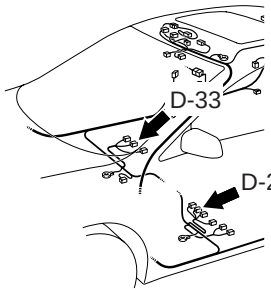

ACB02656AB

Connectors: D-29, D-33 <RHD>

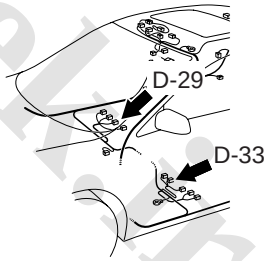

ACB02658AB

COMMENTS ON TROUBLE SYMPTOM
If the seat belt reminder function does not work normally, the seat belt switch input circuit, the combination meter or centre panel unit may be defective.

PROBABLE CAUSES
- Malfunction of the seat belt switch (driver's side)
- Malfunction of the seat belt switch (passenger's side)
- Malfunction of the combination meter
- Malfunction of the centre panel unit
- Damaged harness wires and connectors

www.cargeek.ir

www.CarGeek.ir

DIAGNOSIS PROCEDURE

STEP 1. Connector check: D-29 seat belt switch (driver's side) connector, D-33 seat belt switch (passenger's side) connector

Q: Is the check result normal?
YES : Go to Step 2.
NO : Repair the defective connector.

STEP 2. Check the seat belt switch.
Refer to GROUP 52A – Front Seat Belt .

Q: Is the check result normal?
YES : Go to Step 3.
NO : Replace the seat belt switch.

STEP 3. Resistance measurement at the D-29 seat belt switch (driver's side) connector, D-33 seat belt switch (passenger's side) connector
(1) Disconnect the connector, and measure at the wiring harness side.
(2) Measure the resistance between the seat belt switch connector terminal No. 2 and the body earth.

OK: Continuity exists (2 Ω or less)

Q: Is the check result normal?
YES : Go to Step 5.
NO : Go to Step 4.

STEP 4. Wiring harness check from D-29 seat belt switch (driver's side) connector, D-33 seat belt switch (passenger's side) connector terminal No. 2 to body earth.
NOTE: Prior to the wiring harness inspection, check joint connector D-47, and repair if necessary.
- Check the earth wires for open circuit.

Q: Is the check result normal?
YES : The trouble can be an intermittent malfunction (Refer to GROUP 00 – How to use Troubleshooting/inspection Service Points – How to Cope with Intermittent Malfunction).
NO : Repair the wiring harness.

STEP 5. Connector check: C-01 combination meter connector

Q: Is the check result normal?
YES : Go to Step 6.
NO : Repair the defective connector.

STEP 6. Check the wiring harness from C-01 combination meter connector terminal No.5 <driver's side> or 16 <passenger's side> to D-29 seat belt switch (driver's side) connector, D-33 seat belt switch (passenger's side) connector terminal No. 1.
NOTE: Prior to the wiring harness inspection, check intermediate connector C-27, and repair if necessary.
- Check the input line for open and short circuit.

Q: Is the check result normal?
YES : Go to Step 7.
NO : Repair the wiring harness.

STEP 7. Connector check: C-10 centre panel unit connector

Q: Is the check result normal?
YES : Go to Step 8.
NO : Repair the defective connector.

STEP 8. Check the wiring harness from C-10 centre panel unit connector terminal No.3 to C-01 combination meter connector terminal No.19.
- Check the input line for open and short circuit.

Q: Is the check result normal?
YES : Go to Step 9.
NO : Repair the wiring harness.

STEP 9. Retest the system.
The seat belt reminder function should work normally.

Q: Is the check result normal?
YES <The seat belt reminder function works normally.> : The trouble can be an intermittent malfunction (Refer to GROUP 00 – How to use Troubleshooting/inspection Service Points – How to Cope with Intermittent Malfunction).
NO <Buzzers do not sound.> : Replace the combination meter.
NO <The indicator (driver's side) does not illuminate.> : Replace the combination meter.
NO <The indicator (passenger's side) does not illuminate.> : Replace the centre panel unit.

SERVICE DATA

M1540201000871

NOTE: Some items are not displayed on M.U.T.-III according to the information in the ECU.

www.cargeek.ir

www.CarGeek.ir

Item No.	Check item	Check condition	Normal condition
01	Illumination	Tail lamp: Illuminates	ON
		Tail lamp: OFF	OFF
80	Speed meter	Speedometer displayed value and M.U.T.-III displayed value agree with each other.	
87	Tachometer	Tachometer displayed value and M.U.T.-III displayed value agree with each other.	
89	Fuel gauge	Fuel gauge unit resistance value and M.U.T.-III displayed value agree with each other. (Tolerance is ±2 Ω)	
8A	Fuel gauge(Target)	Fuel gauge and M.U.T.-III displayed values agree with each other.	
90	Odometer	Odometer displayed value and M.U.T.-III displayed value agree with each other.	
91	Rheostat	Lighting change by rheostat switch operation and M.U.T.-III displayed change agree with each other.	
92	Trip meter A	Tripmeter displayed value and M.U.T.-III displayed value agree with each other.	
93	Trip meter B		
94	Power source voltage	Always	5 – 20 V
A1	SRS indicator	Indicator illuminates	ON
		Indicator is extinguished	OFF
A2	ABS indicator	Indicator illuminates	ON
		Indicator is extinguished	OFF
A4	Charge indicator	Indicator illuminates	ON
		Indicator is extinguished	OFF
A5	Check Engine indicator	Indicator illuminates	ON
		Indicator is extinguished	OFF
A7	Brake indicator	Indicator illuminates	ON
		Indicator is extinguished	OFF
A8	Driver seatbelt indicator	Indicator illuminates	ON
		Indicator is extinguished	OFF
AA	ASC/TCL Operation indicator	Indicator illuminates	ON
		Indicator is extinguished	OFF
AB	ASC/TCL OFF indicator	Indicator illuminates <Vehicles without colour liquid crystal display>	ON
		Indicator is extinguished <Vehicles without colour liquid crystal display>	OFF
		Always <Vehicles with colour liquid crystal display>	OFF
AD	ECO indicator	Indicator illuminates	ON
		Indicator is extinguished	OFF
B1	Turn signal indicator(Right)	Turn-signal lamp (RH): Illuminates	ON
		Turn-signal lamp (RH): OFF	OFF

www.cargeek.ir

Item No.	Check item	Check condition	Normal condition
B2	Turn signal indicator(Left)	Turn-signal lamp (LH): Illuminates	ON
		Turn-signal lamp (LH): OFF	OFF
B3	Front fog lamp indicator	1. Tail lamp: Illuminates 2. Fog lamp switch: ON	ON
		Fog lamp is not illuminated	OFF
B4	High beam indicator	Dimmer switch: ON	ON
		Fog lamp is not illuminated	OFF
BA	Positionlamp indicator	Tail lamp switch: ON	ON
		Tail lamp switch: OFF	OFF
D6	Head lamp auto levelling warning	Indicator illuminates	ON
		Indicator is extinguished	OFF
E1	Tyre Pressure indicator	Always	OFF
F2	FL corner sensor indicator	Always	OFF
F3	FR corner sensor indicator	Always	OFF
F4	RL corner sensor indicator	Indicator illuminates	ON
		Indicator is extinguished	OFF
F5	RR corner sensor indicator	Indicator illuminates	ON
		Indicator is extinguished	OFF
F6	Back corner sensor	Indicator illuminates	ON
		Indicator is extinguished	OFF
F7	Cruise control indicator	Indicator illuminates	ON
		Indicator is extinguished	OFF
F8	Rear fog lamp indicator	1. Front fog lamp: Illuminates 2. Fog lamp switch: ON	ON
		Fog lamp is not illuminated	OFF
F10	Diesel GLOW indicator	Indicator illuminates	ON
		Indicator is extinguished	OFF
F17	AFS OFF indicator	Always	OFF
F27	Passenger seatbelt indicator	Always	OFF
F29	Inter cooler spray indicator	Always	OFF
F30	AS&G indicator	Indicator illuminates	ON
		Indicator is extinguished	OFF
F31	AS&G OFF indicator	Indicator illuminates	ON
		Indicator is extinguished	OFF

www.cargeek.ir

www.CarGeek.ir

ACTUATOR TEST TABLE

M1540201100834

ACTUATOR TEST

Item No.	Item name	Test item	Driven content
1*	Speedometer	Pointer setting (–)	Value that is set with M.U.T.-III is shown on the combination meter.
2	Tachometer	Pointer setting (r/min)	
3	Fuel gauge	Status setting (ohm)	
5	Meter illumination	Status setting (%)	
7	Indicator1	By turning ON/OFF the item values, indicators can be illuminated/extinguished and buzzers can be sounded.	ON (illuminated)/ OFF (extinguished)
8	Indicator2		
9	Indicator3		
10	Indicator4		

*NOTE: *: Depending on the main scale of the speedometer, the unit that can be tested changes. Unit is displayed as "–" on the M.U.T.-III MB991958 screen.*

TEST (SPECIAL FUNCTION)

Item No.	Item name	Test content
2	LCD(AUTO)	The multi information display screen changes by looping in the following order. **<Vehicles with colour liquid crystal display>** 1. A black full screen is displayed. 2. The version information is displayed. 3. A white full screen is displayed. 4. A screen with black and white gradation is displayed. **<Vehicles without colour liquid crystal display>** 1. All display items are turned off. 2. All display items are turned on. 3. The check pattern is displayed. 4. The check pattern (reversed) is displayed.
3	Buzzer(AUTO)	The buzzer sounds.

CHECK PROCEDURE FOR EACH MULTI INFORMATION DISPLAY SCREEN

M1540201901219

⚠ CAUTION

When there are TV towers, substations, or broadcasting stations which emit strong radio waves in proximity, on rare occasions, a warning is displayed on the multi information screen for a few seconds. This is caused by the reception of strong radio waves, and there is no functional problem.

WARNING SCREEN

When malfunctions occur to the vehicle, the following warning screens are displayed. If these screens are not displayed normally or if they continue to be displayed even after the factor is eliminated, take measures according to the action procedure.

www.cargeek.ir

www.CarGeek.ir

Display content			Factor	Action procedure
Vehicles without colour liquid crystal display	Vehicles with colour liquid crystal display			
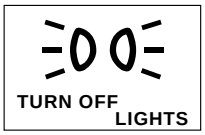 AC509826	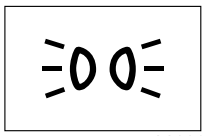 AC809612	TURN OFF LIGHTS	Displayed with the sounding of buzzer when the driver's door is opened with the ignition switch at the LOCK (OFF) or ACC position and the lighting switch at the tail or head position.	If the lighting monitor warning buzzer is not being sounded, perform the troubleshooting for the lighting monitor warning buzzer. Refer to .
AC505679	AC505679	ALARM ACTIVATIN G	Displayed while the security alarm is in operation.	If the warning screen is not displayed normally or if the screen continues to be displayed, carry out the troubleshooting for the security alarm (Refer to).

www.cargeek.ir

www.cargeek.ir

www.CarGeek.ir

Display content			Factor	Action procedure
Vehicles without colour liquid crystal display	Vehicles with colour liquid crystal display			
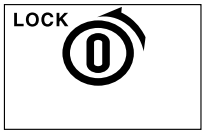 ACA00967	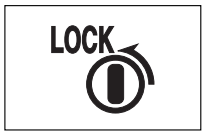 AC900961	–	Displayed when the following operations are carried out with the ignition switch at positions other than the LOCK (PUSH OFF) position after the engine is stopped. • When the driver's door is opened • When the doors are closed and locked	If the warning screen is not displayed normally or if the screen continues to be displayed, perform the troubleshooting for the KOS. Refer to GROUP 42B – Diagnosis code chart .
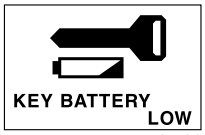 ACA00968	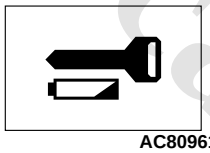 AC809614	KEY BATTERY LOW	Displayed when the KOS key battery is running low.	
ACA00969	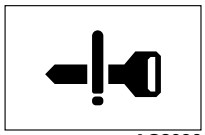 AC809615	KEY NOT DETECTED	Displayed if carrying a KOS key with different ID code or the KOS key is outside the operative range.	
ACA00970	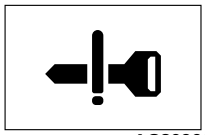 AC809615	KEY STILL IN VEHICLE	Displayed when the KOS key take-out monitoring function or KOS key confinement prevention function is in operation.	
ACA00971	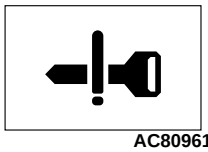 AC809615	CHECK DOORS	Displayed when the door ajar prevention function is in operation.	
		KEYLESS OPERATIO	Displayed when there is a	

www.cargeek.ir

www.CarGeek.ir

Display content			Factor	Action procedure
Vehicles without colour liquid crystal display	Vehicles with colour liquid crystal display			
AC613203	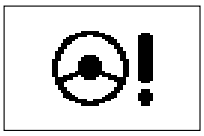 AC809616	POWER STEERING SERVICE REQUIRED	Displayed when there is a malfunction to the EPS.	If the warning screen is not displayed normally or if the screen continues to be displayed, perform the troubleshooting for the EPS. Refer to GROUP 37B – Trouble symptom chart .
AC509829	AC809617	BRAKE SYSTEM SERVICE REQUIRED	Displayed when the brake fluid amount is insufficient or a malfunction occurs to the brake device.	If the warning screen is not displayed normally or if the screen continues to be displayed, check the brake fluid or brake device. Refer to GROUP 35A – On-vehicle Service .
AC509830	AC809617	RELEASE PARKING BRAKE	Displayed if vehicle is driven with the parking brake engaged.	If the warning screen is not displayed normally or if the screen continues to be displayed, check the parking brake. Refer to GROUP 36 – On-vehicle Service .
AC509831	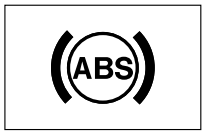 AC809618	ABS SERVICE REQUIRED	Displayed when a malfunction occurs to the anti-skid braking system (ABS).	If the warning screen is not displayed normally or if the screen continues to be displayed, perform the troubleshooting for the ABS or ASC. Refer to GROUP 35B – Trouble Symptom Chart <ABS> or GROUP 35C – Trouble Symptom Chart <ASC>.

www.cargeek.ir

www.CarGeek.ir

Display content			Factor	Action procedure
Vehicles without colour liquid crystal display	Vehicles with colour liquid crystal display			
AC505684AB	AC900086	–	If any of the doors or tailgate is not closed completely, the location of the ajar door is displayed with the sounding of buzzer.	If the door ajar warning buzzer does not sound, perform the troubleshooting for the door ajar warning buzzer. Refer to .
AC905322	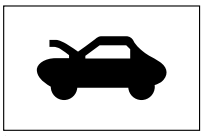 AC809641	CLOSE HOOD	Displayed when the hood is open.	If the warning screen is not displayed normally or if the screen continues to be displayed, check the hood latch switch input signal. Refer to .
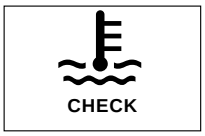 AC509834	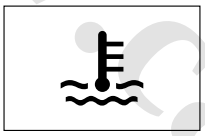 AC809619	ENGINE OVERHEATING STOP SAFELY	Displayed when overheated.	If the warning screen is not displayed normally or if the screen continues to be displayed, perform the troubleshooting for the engine. Refer to GROUP 13A – Trouble Symptom Chart <1600> or GROUP 13B – Trouble Symptom Chart <1800-Petrol-DOHC, 2000> or GROUP 13C – Trouble Symptom Chart <1800-Diesel> or GROUP 13F – Trouble Symptom Chart <1800-Petrol-SOHC>.

www.cargeek.ir

www.CarGeek.ir

Display content			Factor	Action procedure
Vehicles without colour liquid crystal display	Vehicles with colour liquid crystal display			
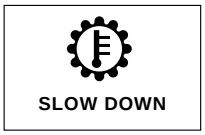 AC509835	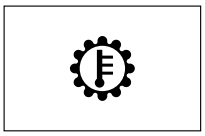 AC809620	TRANSMISSION OVERHEATING SLOW DOWN	Displayed when the transmission oil temperature becomes high.	If the warning screen is not displayed normally or if the screen continues to be displayed, check the CVT or A/T diagnosis code. Refer to GROUP 23A – Diagnosis Code Chart <CVT> or GROUP 23C – Diagnosis Code Chart <A/T>.
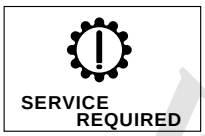 AC509836	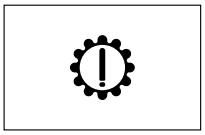 AC809621	TRANSMISSION SERVICE REQUIRED	Displayed when there is a malfunction to the CVT or A/T.	
AC509837	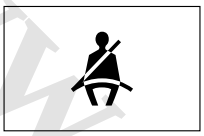 AC809622	FASTEN SEAT BELT	Displayed when the ignition switch is turned ON without the driver's seat belt fastened.	If the warning screen is not displayed normally or if the screen continues to be displayed, perform the troubleshooting for the seat belt reminder warning lamp. Refer to .
AC509838	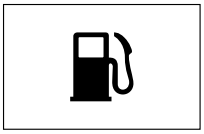 AC809623	FUEL SYSTEM SERVICE REQUIRED	Displayed when there is a malfunction to the fuel system.	If the warning screen is not displayed normally or if the screen continues to be displayed, check the combination meter diagnosis code. Refer to .
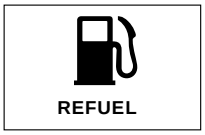 AC509839	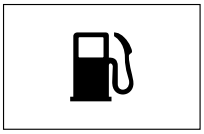 AC809623	REFUEL	Displayed when the remaining fuel amount is small.	If the warning screen is not displayed normally or if the screen continues to be displayed, refuel immediately.

www.cargeek.ir

www.CarGeek.ir

Display content			Factor	Action procedure
Vehicles without colour liquid crystal display	Vehicles with colour liquid crystal display			
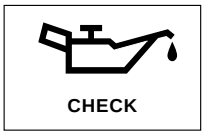 AC509840	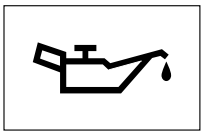 AC809624	LOW OIL PRESSURE	Displayed when there is a malfunction to the engine oil circulation system.	If the warning screen is not displayed normally or if the screen continues to be displayed, check the oil pressure. (Refer to GROUP 12 – On-vehicle Service .) Then if the oil pressure is normal, perform the troubleshooting for the engine. (Refer to GROUP 13A – Trouble Symptom Chart <1600> or GROUP 13B – Trouble Symptom Chart <1800-Petrol-DOHC, 2000> or GROUP 13C – Trouble Symptom Chart <1800-Diesel> or GROUP 13F – Trouble Symptom Chart <1800-Petrol-SOHC>.)
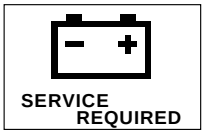 AC509841	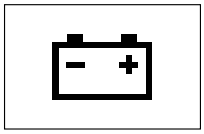 AC809625	CHARGING SYSTEM SERVICE REQUIRED	Displayed when there is a malfunction to the charging system.	If the warning screen is not displayed normally or if the screen continues to be displayed, check the charging system. Refer to GROUP 16 – On-vehicle service – Output current test and Regulated voltage test .

www.cargeek.ir

www.CarGeek.ir

Display content			Factor	Action procedure
Vehicles without colour liquid crystal display	Vehicles with colour liquid crystal display			
AC509842	AC809626	AIRBAG SYSTEM SERVICE REQUIRED	Displayed when there is a malfunction to the SRS air bag or to the pre-tensioner mechanism.	If the warning screen is not displayed normally or if the screen continues to be displayed, perform the troubleshooting for the SRS air bag/pre-tensioner mechanism warning lamp. Refer to GROUP 52B – Trouble symptom chart .
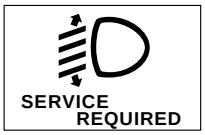 AC509843	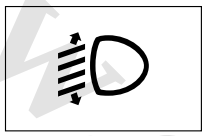 AC809628	HEADLAMP LEVELLING SERVICE REQUIRED	Displayed when there is a malfunction to the headlamp automatic levelling function.	If the warning screen is not displayed normally or if the screen continues to be displayed, perform the troubleshooting for the headlamp automatic levelling function. Refer to .
AC613202	AC809629	ADAPTIVE FRONT LIGHTING SERVICE REQUIRED	Displayed when there is a malfunction to the AFS.	If the warning screen is not displayed normally or if the screen continues to be displayed, perform the troubleshooting for the AFS. Refer to .
AC509844	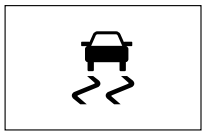 AC809630	ASC SYSTEM SERVICE REQUIRED	Displayed when there is a malfunction to the ASC.	If the warning screen is not displayed normally or if the screen continues to be displayed, perform the troubleshooting for the ASC. Refer to GROUP 35C – Trouble symptom chart .

www.cargeek.ir
www.cargeek.ir

www.CarGeek.ir

Display content			Factor	Action procedure
Vehicles without colour liquid crystal display	Vehicles with colour liquid crystal display			
AC509845	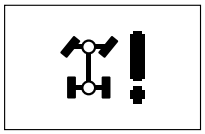 AC809631	4WD SYSTEM SERVICE REQUIRED	Displayed when there is a malfunction to the electronically-controlled 4WD system.	If the warning screen is not displayed normally or if the screen continues to be displayed, perform the troubleshooting for the electronically-controlled 4WD system. Refer to GROUP 27C – Trouble symptom chart .
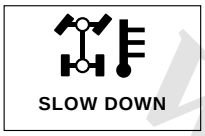 AC509846	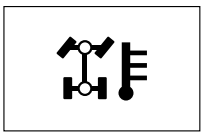 AC809642	4WD SYSTEM OVERHEATING SLOW DOWN	Displayed when there is a malfunction to the electronically-controlled 4WD differential temperature is high.	
AC509848	AC809632	POSSIBLE ICY ROADS	Displayed with the sounding of buzzer when the ambient temperature is 3 °C or less.	If the warning buzzer does not sound when the combination meter displays 3 °C, perform the troubleshooting for the freeze warning buzzer. Refer to .
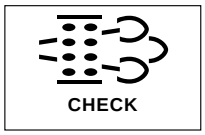 AC612476	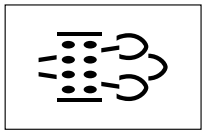 AC809633	CHECK DPF SYSTEM	Displayed when the excessive diesel particulates are accumulated.	If the warning screen is not displayed normally or if the screen continues to be displayed, check the diesel particulate filter system (DPF).
AC612468	AC809639	CHECK ENGINE OIL LEVEL	Displayed when the engine oil level has increased excessively. <1800-diesel>	If the warning screen is not displayed normally or if the screen continues to be displayed, check the diesel engine diagnosis code. Refer to GROUP 13C – Diagnosis Code Chart .

OTHER SCREENS

The screen displays the operation state of each system, periodic checkup timing, or timing for taking a rest during driving. If the screen display differs from the actual system operation state or if the screen is not displayed at the set timing, take measures according to the action procedure.

www.cargeek.ir

www.CarGeek.ir

Display content			System operation state	Action procedure
Vehicles without colour liquid crystal display	**Vehicles with colour liquid crystal display**			
a 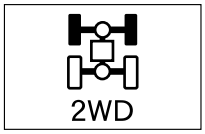 AC505707	a 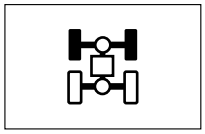 AC809644	–	Displayed in accordance with operation state of the 4WD selector switch. a. "2WD" mode is selected. b. "4WD" mode is selected. c. "4WD LOCK" mode is selected.	If the 4WD selector switch position and screen do not agree with each other, perform the troubleshooting for the 4WD. Refer to GROUP 27C – Trouble symptom chart .
b 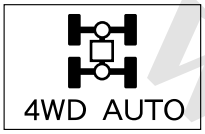 AC505708	b 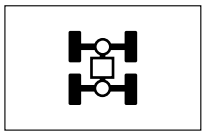 AC809645	4WD AUTO		
c 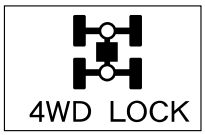 AC505709	c 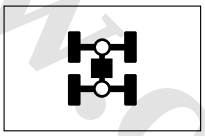 AC809646	4WD LOCK		
AC809636	AC809636	–	Displayed when the ASC is in operation.	If the warning screen is not displayed normally or if the screen continues to be displayed, perform the troubleshooting for the ASC. Refer to GROUP 35C – Trouble symptom chart .
AC509849	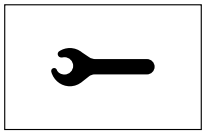 AC809637	ROUTINE MAINTENANCE REQUIRED	Displayed when the set period elapses.	–
AC613245	AC809638	REST REMINDER	Displayed when the set time elapses.	–

www.cargeek.ir

www.CarGeek.ir

CHECK AT ECU TERMINALS

M1540201200336

Connector: C-01

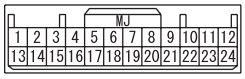

AC606907AE

Terminal No.	Check item	Check condition	Normal condition
1	ECU power supply (battery)	Always	System voltage
2	ECU power supply (Ignition switch: IG1)	Ignition switch: ON	System voltage
		Ignition switch: OFF	1 V or less
3	Multi information meter switch input	Multi information meter switch: ON	1 V or less
		Multi information meter switch: OFF	System voltage
4	Parking brake switch input	Parking brake switch: ON	1 V or less
		Parking brake switch: OFF	System voltage
5	Seat belt switch (driver's side) input	Seat belt switch (driver's side): ON	1 V or less
		Seat belt switch (driver's side): OFF	System voltage
6	Headlamp levelling	During headlamp levelling warning display	1.2 V or less
		Without headlamp levelling warning display	System voltage
7 to 12	–	–	–
13	Earth (sensor)	Always	1 V or less
14, 15	–	–	–
16	Seat belt switch (passenger's side) input	Seat belt switch (passenger's side): ON	1 V or less
		Seat belt switch (passenger's side): OFF	System voltage
17	–	–	–
18	Input of fuel gauge	Fuel: FULL	Approximately 2 V
		Fuel: EMPTY	Approximately 8 V
19	–	–	–
20	Vehicle speed signal output	Vehicle speed: Approximately 40 km/h	Approximately 28 Hz
		Vehicle speed change	In accordance with the vehicle speed, a pulse is generated.
21	Earth (ECU)	Always	1 V or less
22	Illumination (–) output	Lighting switch: OFF	1 V or less
		Lighting switch: TAIL position	In accordance with the rheostat switch operation, a pulse is generated.
23	Illumination (+) output	Lighting switch: TAIL position	System voltage
24	Illumination (power supply)	Always	System voltage

www.cargeek.ir

ON-VEHICLE SERVICE

SPEEDOMETER CHECK

M1540201400460

⚠ CAUTION

- **If the speedometer is checked using the speedometer tester, the diagnosis code may be stored in the ABS-ECU or ASC-ECU. Therefore, after the check is finished, erase the diagnosis code stored in the ABS-ECU or ASC-ECU.**
- **Do not accelerate or decelerate suddenly during servicing work.**

1. Check that the current tyre inflation pressures meet the inflation pressure label.
2. <Vehicles with ASC> Press the ASC OFF switch for 3 seconds or more to stop the ASC operation.

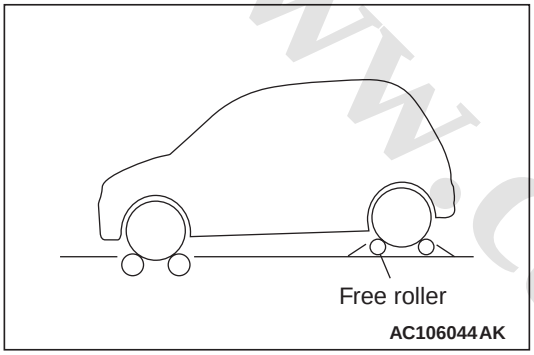

3. Set the vehicle on the speedometer tester.
   NOTE: Set to the 2WD state.

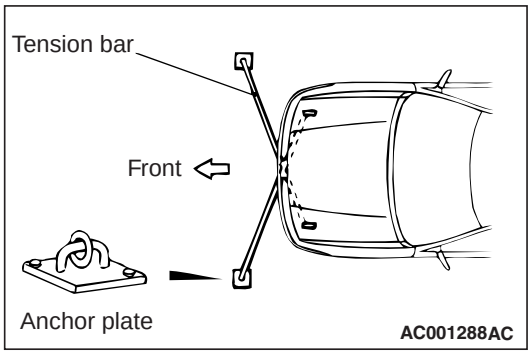

4. For prevention of front wheel lateral runout, install extension fittings on front towing eye and tie down hook, and install both ends of anchor plate.
5. For prevention of vehicle from starting out, install chain or wire (the other end of which is tightly fixed on rear towing eye) on the vehicle.
6. Check that the speedometer indicating range is within the standard value and the needle fluctuation is within the limit value.

   Standard value:

Standard indicator km/h (mph)	Allowance range km/h (mph)
20 (10)	20.0 – 24.0 (10.0 – 12.5)
40 (25)	40.0 – 44.0 (25.0 – 27.5)
80 (50)	80.5 – 85.5 (50.3 – 53.5)
120 (75)	121.5 – 127.5 (76.0 – 80.0)
160 (100)	162.5 – 169.5 (101.5 – 106.0)
200 (125)	203.5 – 211.5 (127.2 – 132.2)
240 (150)	244.5 – 254.5 (152.8 – 159.1)

   Limit: Indicator deflection (vehicle speed is 35 km/h or more) ±3 km/h

TACHOMETER CHECK

M1540201500326

When the actuator tests (item No. 2) are performed using M.U.T.-III, check that the tachometer indication tolerance is within the standard value.

NOTE: Values in ( ) indicates the reference value.

Standard value:

Engine speed (r/min)	Tachometer indicating tolerance (r/min)
600	± 50
(2,000)	(± 50)
3,000	± 50
(4,000)	(± 50)
5,000	± 50
6,000	± 50
(7,000) <petrol engine>	(± 50)
(8,000) <petrol engine>	(± 50)

FUEL GAUGE UNIT CHECK

M1540201600884

NOMINAL RESISTANCE OF THE FUEL GAUGE UNIT

1. Remove the fuel tank pump and gauge assembly (Refer to GROUP 13D – On-vehicle service <1600, 1800-petrol, 2000> or <1800-diesel>).

www.cargeek.ir

www.CarGeek.ir

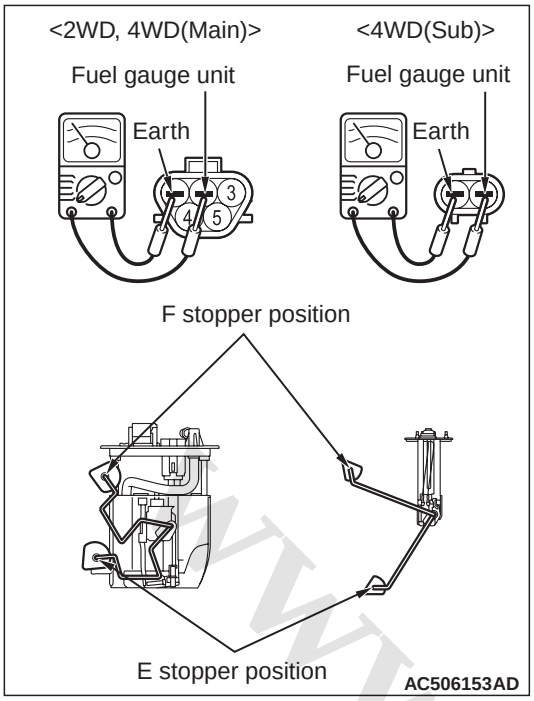

2. When float of the fuel gauge unit is in stopper positions F and E, ensure that resistance between the fuel gauge unit terminal and earth terminal is within the standard value.

Standard value <2WD>:

Float position	Gauge resistance value (Ω)
Stopper position "F"	13.0 ± 1.0
Stopper position "E"	120.0 ± 1.0

Standard value <4WD>:

Float position	Gauge resistance value (Ω)	
	Main	Sub
Stopper position "F"	6.5 ± 1.0	6.5 ± 1.0
Stopper position "E"	41.9 ± 1.0	78.1 ± 1.0

3. When the float is moved slowly between stopper positions "F" and "E", ensure that the resistance is smoothly changing.

FUEL GAUGE UNIT FLOAT HEIGHT

1. Remove the fuel tank pump and gauge assembly (Refer to GROUP 13D – On-vehicle service <1600, 1800-petrol, 2000> or <1800-diesel>).

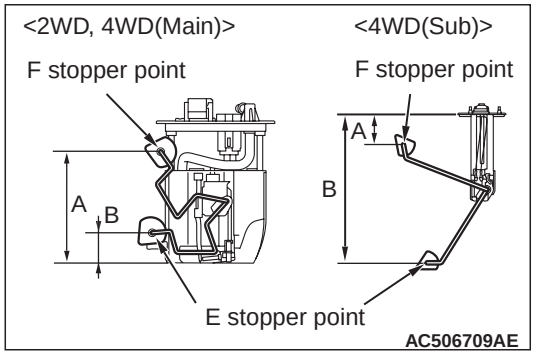

2. When float is moved to contact the float arm on the stopper, ensure that stopper positions "F" and "E" are within the standard value.

Standard value <2WD-Petrol engine>:

Float position	Float height (mm)
Stopper position "F" (height A)	181.5 ± 4.0
Stopper position "E" (height B)	26.7 ± 4.0

Standard value <2WD-Diesel engine>:

Float position	Float height (mm)
Stopper position "F" (height A)	185.1
Stopper position "E" (height B)	29.8

Standard value <4WD>:

Float position	Float height (mm)	
	Main	Sub
Stopper position "F" (height A)	140.9 ± 4.0	14.2 ± 3.0
Stopper position "E" (height B)	39.1 ± 4.0	179.3 ± 3.0

METER INFORMATION SWITCH CHECK

M1540202000108

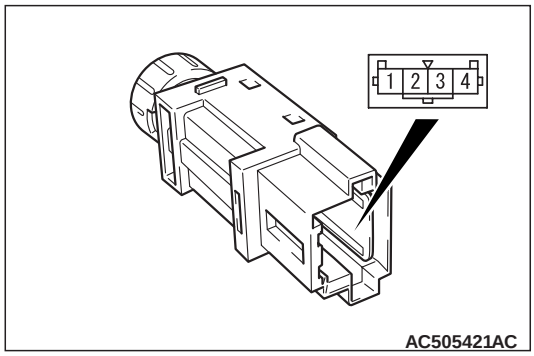

www.cargeek.ir

Check conditions	Terminal number	Normal condition
OFF	1 – 4	No continuity
ON		Continuity exists (2 Ω or less)

SERVICE REMINDER FUNCTION SET

M1540208200694

HOW TO SET BY OPERATING M.U.T.-III

⚠ CAUTION

- **If the combination meter needs to be replaced, the current driving distance and elapsed days must be entered into the meter after the replacement in order to be used for service reminder function. Therefore, read "Integrated mileage for reminder," "Integrated days for reminder," "Mileage until Extra reminder," "Months until Extra reminder," and "Current schedule" from the meter before the replacement using the special function of M.U.T.-III, and note them. If "Integrated mileage for reminder" or "Integrated days for reminder" cannot be read from the meter using M.U.T.-III, use the following method.**
  a. **As for the driving distance for check warning, use the driving distance displayed on the multi information display.**
  b. **As for the elapsed days for check warning, calculate the number of elapsed days from the delivery date to the customer (service reminder function start date) and current date.**
- **After the service reminder function has started, when the elapsed days for check warning is reset for the vehicle whose battery is removed for a long period (15 days or more), calculate the elapsed days from the delivery date to the customer (service reminder function start date) and the current date, and then input it.**

Using M.U.T.-III, the following service reminder functions can be set. Before setting, check the current status (schedule, elapsed distance and elapsed days).

1. Reminder reset (Indicator off)
2. Next schedule reminder cancel
3. Extra reminder setting
4. Extra reminder cancel
5. Periodic reminder schedule set
6. Integrated value adjustment
7. Optional INT schedule setting

HOW TO OPERATE M.U.T.-III

⚠ CAUTION

Before setting, if the combination meter does not start measuring the elapsed time, turn the ignition switch to the ON position while pressing the meter information switch to start a measurement.

1. Connect M.U.T.-III to the diagnosis connector (16 pin).
2. Start the M.U.T.-III system on the PC and turn the ignition switch to the "ON" position.
3. Select "Meter" on the "System Select" screen, and press the "OK" button.
4. Select "Special Function" on the next screen.
5. Select "Service Reminder" on the "Special function" screen.

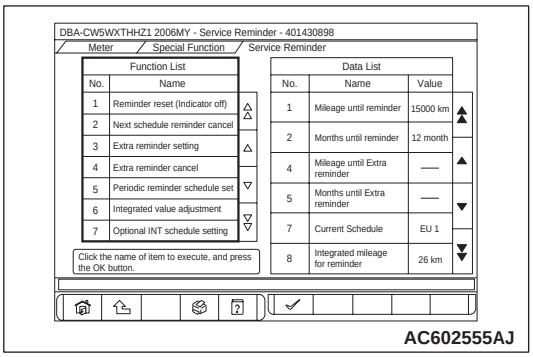

6. Select the function to be executed from "Function List."
   - 1 Reminder reset (Indicator off) (Refer to .)
   - 2 Next schedule reminder cancel (Refer to .)
   - 3 Extra reminder setting (Refer to .)
   - 4 Extra reminder cancel (Refer to .)
   - 5 Periodic reminder schedule set (Refer to .)
   - 6 Integrated value adjustment (Refer to .)
   - 7 Optional INT schedule setting (Refer to .)

1. REMINDER RESET (INDICATOR OFF)

⚠ CAUTION

- **Be careful not to execute "1 Reminder reset (Indicator off)" again after erasing the service reminder warning indicator which is currently output, because the next warning period will be cancelled.**
- **If the next warning period is cancelled by mistake, the cancelled warning period can be restored by executing "5 Periodic reminder schedule set" to set a schedule different from the current one once, and then returning it to the previous schedule.**

The service reminder warning indicator which is currently output can be cancelled.

www.cargeek.ir

www.CarGeek.ir

NOTE: In addition to the operation of M.U.T.-III, the service reminder warning indicator can be cancelled by operating the meter information switch on the combination meter. Refer to .

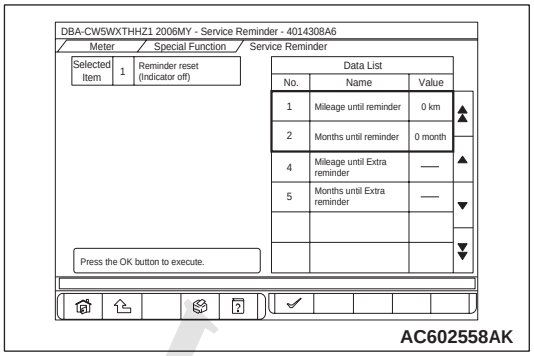

1. On the "Service Reminder" screen, select "1 Reminder reset (Indicator off)."

   NOTE: The screen indicates that the warning period (Nos. 1 and 2 in the data list) is "0 km" and "0 month."

2. Press the "OK" button.

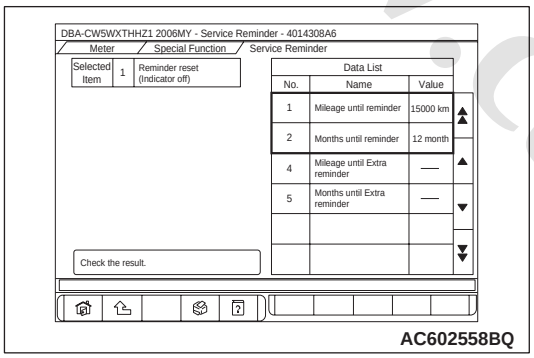

3. The current warning indicator is cancelled, and the next warning period is displayed.

   NOTE: The screen indicates that the warning period (Nos. 1 and 2 in the data list) is "15000 km" and "12 month."

2. NEXT SCHEDULE REMINDER CANCEL

⚠ CAUTION

- **If the next warning period is cancelled by mistake, the cancelled warning period can be restored by executing "5 Periodic reminder schedule set" to set a schedule different from the current one once, and then returning it to the previous schedule.**
- **Only the next schedule can be deleted by executing "2. Next schedule reminder cancel". Schedules cannot be deleted one after another.**

The next warning period is cancelled, and its following warning period can be set.

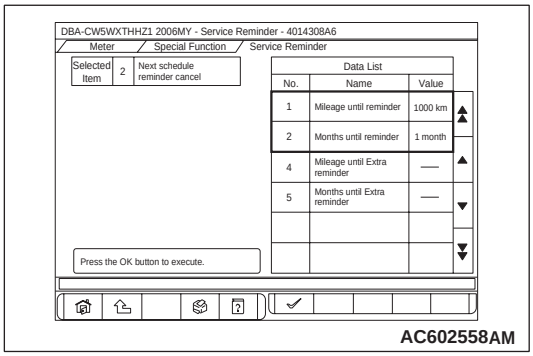

1. On the "Service Reminder" screen, select "2 Next schedule reminder cancel."

   NOTE: The screen indicates that the warning period (Nos. 1 and 2 in the data list) is "1000 km" and "1 month."

2. Press the "OK" button.

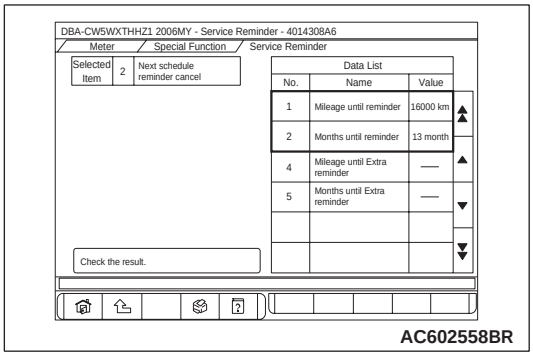

3. The next warning period is reset, and its following warning period is set.

   NOTE: The screen indicates that the warning period (Nos. 1 and 2 in the data list) is changed to "16000 km" and "13 month."

3. EXTRA REMINDER SETTING

In addition to the current warning period, the temporary service reminder warning period can be set.

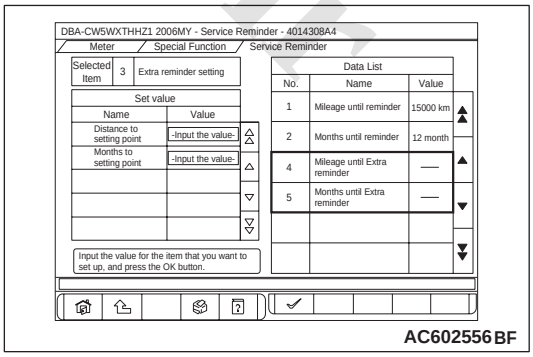

1. On the "Service Reminder" screen, select "3 Extra reminder setting."

   NOTE: The screen indicates that the temporary warning period (Nos. 4 and 5 in the data list) has not been set.

www.cargeek.ir

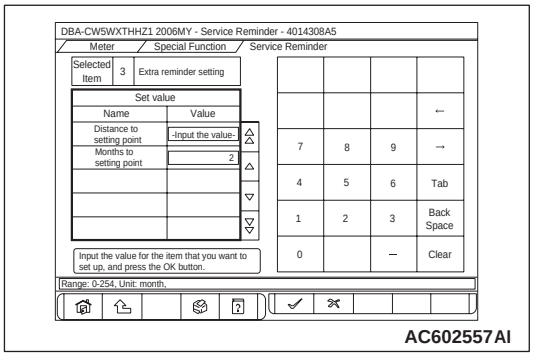

AC602557AI

2. Set the temporary warning period (distance or month) of the "Set value."

   NOTE: Either input of distance or month can execute the setting.

3. Press the "OK" button.

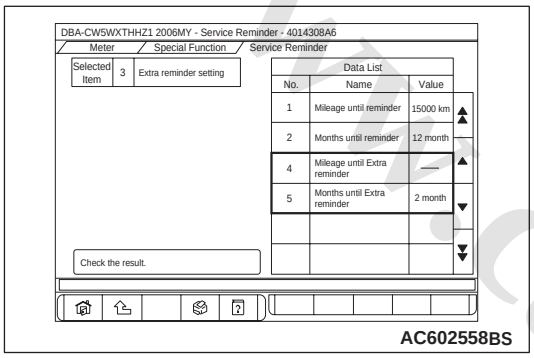

AC602558BS

4. The temporary warning period is set.

   NOTE: The screen indicates that "2 month" has been added to the temporary warning period (No. 5 in the data list). (The distance of No. 4 in the data list has not been set.)

4. EXTRA REMINDER CANCEL

The temporary service reminder warning period which has been set can be cancelled.

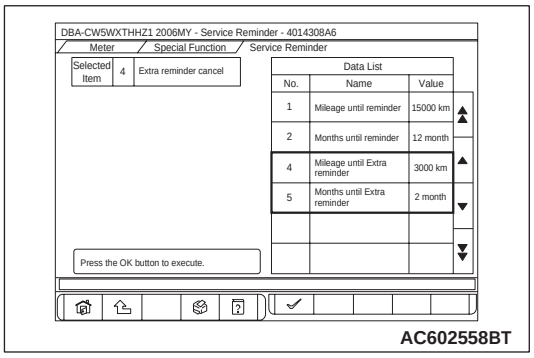

AC602558BT

1. On the "Service Reminder" screen, select "4 Extra reminder cancel."

   NOTE: The screen indicates that "3000 km" and "2 month" have been set to the temporary warning period (Nos. 4 and 5 in the data list).

2. Press the "OK" button.

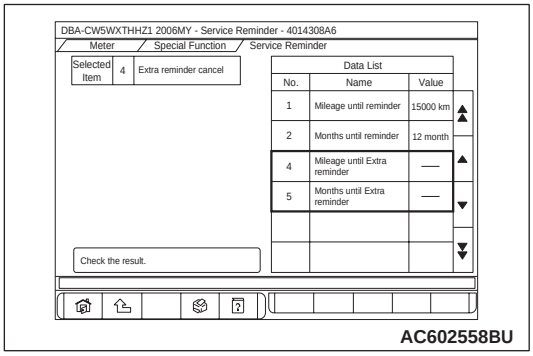

AC602558BU

3. The temporary warning period is cancelled.

   NOTE: The screen indicates that the temporary warning period (Nos. 4 and 5 in the data list) has been cancelled.

5. PERIODIC REMINDER SCHEDULE SET

The service reminder schedule can be changed.

NOTE: In addition to the operation of M.U.T.-III, the schedule can be changed by operating the meter information switch on the combination meter. Refer to .

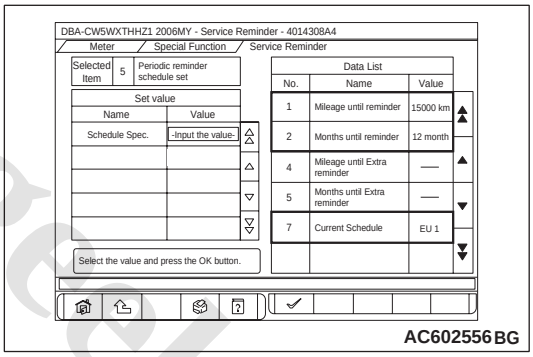

AC602556BG

1. On the "Service Reminder" screen, select "5 Periodic reminder schedule set."

   NOTE: The screen indicates that the current schedule (No. 7 in the data list) has been set to "EU 1."

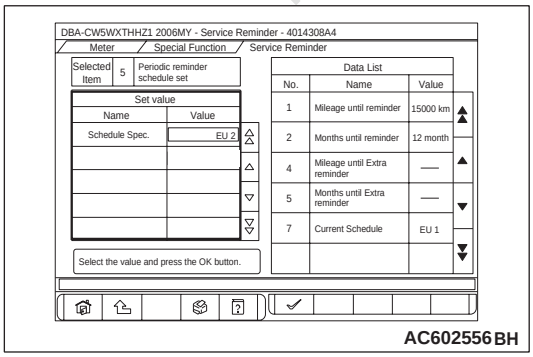

AC602556BH

2. Set the schedule to be changed from "Set value."
3. Press the "OK" button.

www.cargeek.ir

www.CarGeek.ir

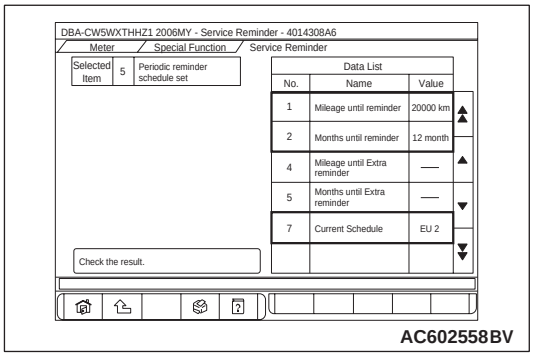

AC602558BV

4. The schedule is changed.

   NOTE: The screen indicates that the current schedule (No. 7 in the data list) has been changed to "EU 2."

6. INTEGRATED VALUE ADJUSTMENT

At the combination meter replacement or for the vehicle with its battery being removed for a long period (15 days or more), this adjustment is used to reset the mileage and elapsed days for check warning.

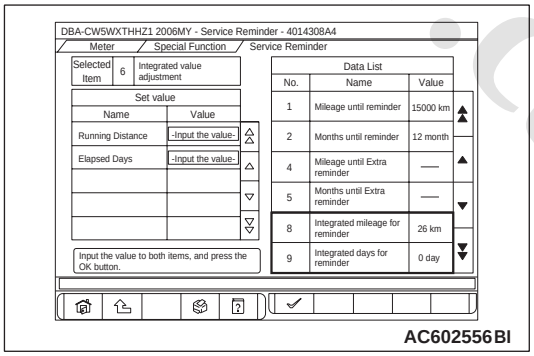

AC602556BI

1. On the "Service Reminder" screen, select "6 Integrated value adjustment."

   NOTE: The screen indicates that the current mileage and elapsed days (Nos. 8 and 9 in the data list) are "26 km" and "0 day."

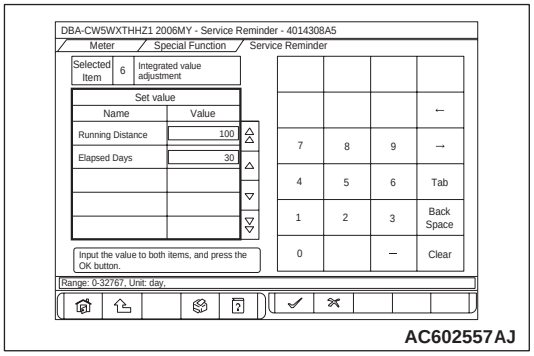

AC602557AJ

2. To "Set value," input the mileage and elapsed days to be reset.

   NOTE: Always input both the mileage and elapsed days.

3. Press the "OK" button.

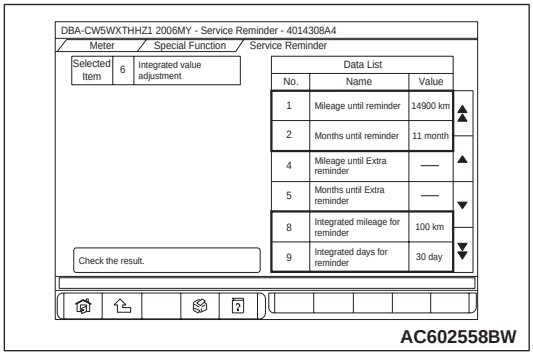

AC602558BW

4. The mileage and elapsed days are changed. The combination meter automatically recalculates the distance and days to the nearest next check from the settings of mileage and elapsed days for check warning, and then displays them in "Data List."

   NOTE:
   - *The screen indicates that the current mileage and elapsed days (Nos. 8 and 9 in the data list) have been changed to "100 km" and "30 day."*
   - *Set the elapsed days for check warning to "0 day" by the above resetting method, thereby the timer is reset indirectly.*

7. OPTIONAL INT SCHEDULE SETTING

⚠ CAUTION

If the current schedule is set to the "Optional INT" by executing "5. Periodic reminder schedule set," the "set value" cannot be input. Therefore, set it to the schedule other than the "Optional INT" once, and then execute "7. Optional INT schedule setting."

In addition to the existing schedule, the optional service reminder schedule can be set.

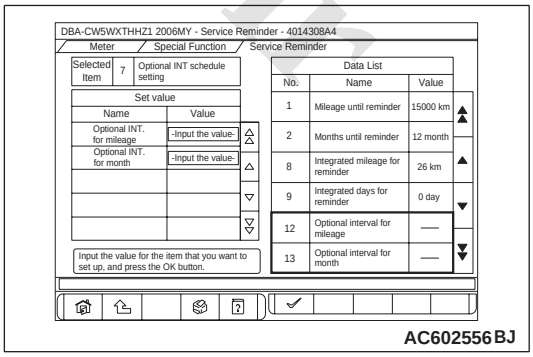

AC602556BJ

1. On the "Service Reminder" screen, select "7 Optional INT schedule setting."

   NOTE: The screen indicates that the optional schedule (Nos. 12 and 13 in the data list) has not been set.

www.cargeek.ir

www.CarGeek.ir

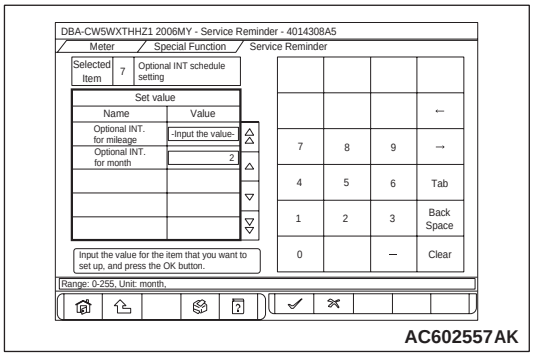

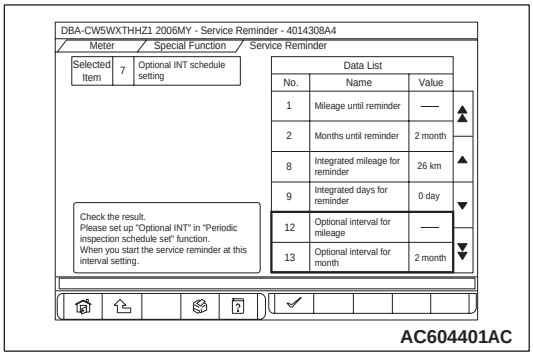

2. Set the optional schedule (distance or month) of the "Set value."

   NOTE: Either input of distance or month can execute the setting.
3. Press the "OK" button.
4. The optional schedule is set. The set schedule becomes effective by executing "5 Periodic reminder schedule set" and setting the schedule to "Optional INT."

   NOTE: The screen indicates that "2 month" has been added to the optional schedule (No. 13 in the data list). (The distance of No. 12 in the data list has not been set.)

Relationship between the elapsed months and the elapsed days which are used by the service reminder function

Number of months	Number of days	Number of months	Number of days	Number of months	Number of days	Number of months	Number of days
1	30 – 60	13	396 – 425	25	761 – 790	37	1 126 – 1 156
2	61 – 90	14	426 – 456	26	791 – 821	38	1 157 – 1 186
3	91 – 121	15	457 – 486	27	822 – 851	39	1 187 – 1 217
4	122 – 151	16	487 – 516	28	852 – 882	40	1 218 – 1 247
5	152 – 182	17	517 – 547	29	883 – 912	41	1 248 – 1 277
6	183 – 212	18	548 – 577	30	913 – 943	42	1 278 – 1 308
7	213 – 243	19	578 – 608	31	944 – 973	43	1 309 – 1 338
8	244 – 273	20	609 – 638	32	974 – 1 003	44	1 339 – 1 369
9	274 – 303	21	639 – 669	33	1 004 – 1 034	45	1 370 – 1 399
10	304 – 334	22	670 – 699	34	1 035 – 1 064	46	1 400 – 1 430
11	335 – 364	23	700 – 730	35	1 065 – 1 095	47	1 431 – 1 460
12	365 – 395	24	731 – 760	36	1 096 – 1 125	48	1 461 – 1 491

NOTE:
- *When the number of elapsed days is 0 to 29, the number of elapsed months is 0.*
- *The combination meter performs calculation using 365.25 days for one year and 30.4375 days for one month.*

HOW TO SET BY SPECIAL OPERATION OF SWITCH

By operating the meter information switch of the combination meter, the service reminder warning cancellation and the schedule setting can be performed.

www.cargeek.ir

www.CarGeek.ir

HOW TO CANCEL THE SERVICE REMINDER WARNING

⚠ CAUTION

- **Be careful not to execute the service reminder warning cancellation by operating the switch again after erasing the service reminder warning indicator which is currently output, because the next warning period will be cancelled.**
- **If the next warning period is cancelled by mistake, the cancelled warning period can be restored by setting a schedule different from the current one once, and then returning it to the previous schedule.**

1. Turn the ignition switch to the "OFF" position.
2. By operating the meter information switch, the warning period is displayed on the odometer.
3. Press the meter information switch once for 1.2 seconds or longer.
4. The service reminder indicator flashes.
5. While the service reminder indicator flashes, press the meter information switch once for less than 1.2 seconds.
6. The service reminder indicator is turned ON, and "CLEAR" is displayed on the odometer display for 3 seconds.
7. After "CLEAR" is displayed for 3 seconds, the warning period to the next time is displayed.

HOW TO SET THE SCHEDULE

1. Turn the ignition switch to the "OFF" position.
2. By operating the meter information switch, the warning period is displayed on the odometer.
3. Press the meter information switch once for 1.2 seconds or longer.
4. The service reminder indicator flashes.
5. While the service reminder indicator flashes, press the meter information switch for 1.2 seconds or longer and 3 times consecutively.
6. The service reminder indicator is turned ON, and the current schedule is displayed on the odometer display.
7. While the current schedule is displayed, press the meter information switch for less than 1.2 seconds and 3 times consecutively.
8. The odometer display is shifted to the schedule selection mode.
9. When the meter information switch is pressed for less than 1.2 seconds, the schedule is shifted, and when the switch is pressed for 1.2 seconds or longer, the displayed schedule is set.

   NOTE: For schedule, "JPN", "NAS", "GCC (GCC/EXP)" and "AUS (MMAL)" can also be selected. However, the using shall be for "EU" only.
10. The schedule set in Step 9 is displayed for 3 seconds, and the warning period to the next time is displayed.

SCHEDULE TABLE

Schedule	Warning type	Warning criteria
EU 1 (initial condition)	Elapsed time (month)	Every 12 elapsed month
	Driving distance (miles)	Every 9,000 miles of driving distance
	Driving distance (km)	Every 15,000 km of driving distance
EU 2	Elapsed time (month)	Every 12 elapsed month
	Driving distance (miles)	Every 12,500 miles of driving distance
	Driving distance (km)	Every 20,000 km of driving distance
OFF Display	Without function. "OFF" is displayed on the odometer/tripmeter.	
Function OFF	Without function (Only M.U.T.-III can be set.)	

NOTE:

- *For schedule, "JPN", "NAS", "GCC (GCC/EXP)" and "AUS (MMAL)" can also be selected. However, the using shall be for "EU" only.*
- **: The optional schedule can be set. (Only M.U.T.-III can be set.)*

HOW TO INACTIVATE THE SERVICE REMINDER FUNCTION

By setting to "OFF Display" or "Function OFF" when the schedule is set, the service reminder function can be inactivated.

When "OFF Display" is selected

- Even if the service reminder screen is displayed by operating the meter information switch, "OFF" is displayed.

www.cargeek.ir

www.CarGeek.ir

When "Function OFF" is selected

- Even when the check warning period is reached, the service reminder display is not displayed.
- Even with the meter information switch operation, the service reminder screen is not displayed.

COMBINATION METER

REMOVAL AND INSTALLATION

M1540201700319

⚠ CAUTION

If the combination meter needs to be replaced, the current driving distance and elapsed days must be entered into the meter after the replacement in order to be used for service reminder function. Therefore, read "Integrated mileage for reminder," "Integrated days for reminder," "Mileage until Extra reminder," "Months until Extra reminder," and "Current schedule" from the meter before the replacement using the special function of M.U.T.-III, and note them. For the operation method of M.U.T.-III, refer to On-vehicle service . If "Integrated mileage for reminder" or "Integrated days for reminder" cannot be read from the meter using M.U.T.-III, use the following method.

- **As for the driving distance for check warning, use the driving distance displayed on the multi information display.**
- **As for the elapsed days for check warning, calculate the number of elapsed days from the delivery date to the customer (service reminder function start date) and current date.**

Pre-removal and Post-installation Operation

- Glove box side panel (Refer to GROUP 52A, Glove box).
- Instrument centre panel (Refer to GROUP 52A, Instrument Centre Panel).
- Instrument panel air outlet garnish lower (LH) <LH drive vehicles> or (RH) <RH drive vehicles> (Refer to GROUP 52A, Instrument lower Panel).

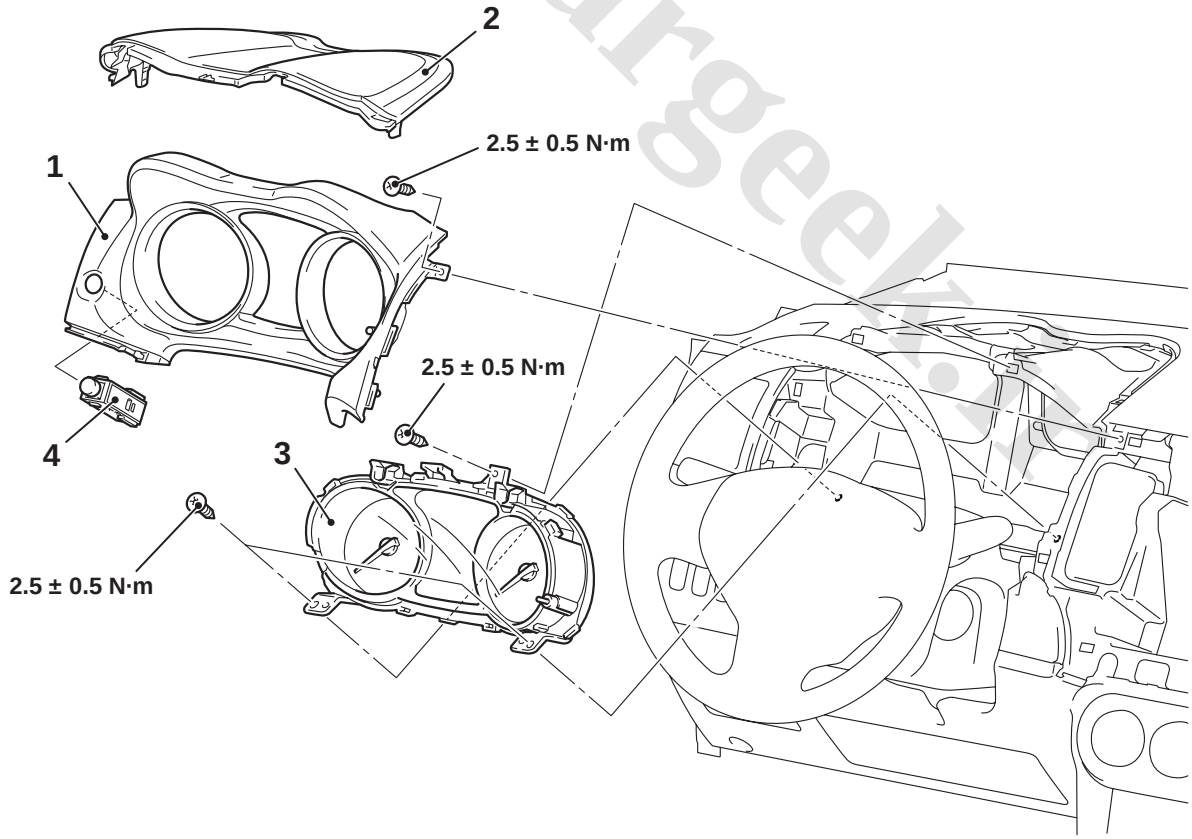

AC609711AD

www.cargeek.ir

www.CarGeek.ir

DISASSEMBLY AND ASSEMBLY

M1540201800167

Removal Steps

1. Combination meter bezel
2. Instrument meter cluster panel
3. Combination meter assembly
4. Meter information switch

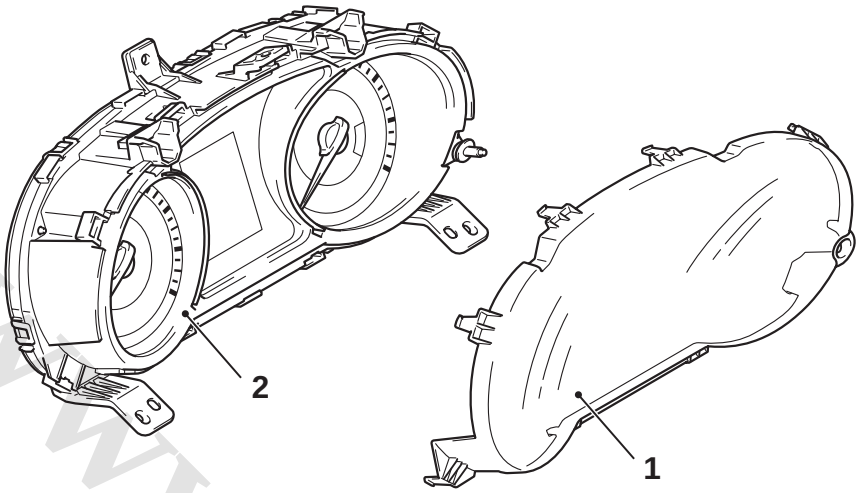

AC506448AB

Disassembly steps

1. Combination meter glass
2. Combination meter

HEADLAMP

SERVICE SPECIFICATIONS

M1540100200273

Item			Standard value	Limit
Headlamp aiming	Low-beam	Vertical direction	36 mm (0.69°) below horizontal (H)	±15 mm (±0.29°) from the horizontal cut-off line
		Horizontal direction	Elbow point intersects the vertical line (V)	± 26 mm (± 0.5°) from the vertical line (V)
Headlamp luminous intensity measurement cd (When a screen is set 25 m ahead of the vehicle)			–	30,000 cd or more

PRECAUTIONS ON HOW TO USE THE HEADLAMP ASSEMBLY

Be careful with the following items as resin lenses are used in the headlamp assembly.

- Don't illuminate the headlamp for three minutes or more when the headlamp is covered with scratch protector.
- Don't tape the outer lens.
- Don't scratch the outer lens surface with a sharp edged special tool.
- Use the specified genuine bulb.

www.cargeek.ir

www.CarGeek.ir

SPECIAL TOOLS

M1540104400194

www.cargeek.ir

www.cargeek.ir

www.CarGeek.ir

Tool	Number	Name	Use
a 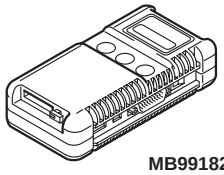 MB991824 b 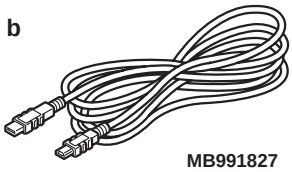 MB991827 c 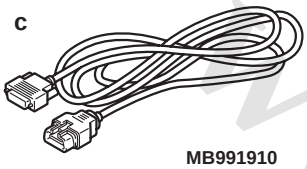 MB991910 d 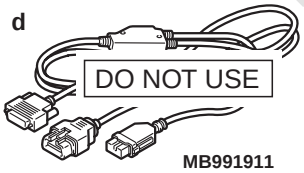 DO NOT USE MB991911 e 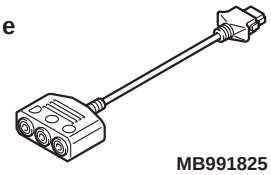 MB991825 f 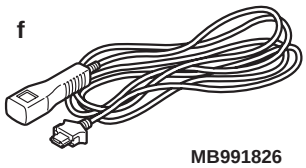 MB991826 MB991955	MB991955 a. MB991824 b. MB991827 c. MB991910 d. MB991911 e. MB991825 f. MB991826	M.U.T.-III sub-assembly a. Vehicle Communication Interface (V.C.I.) b. M.U.T.-III USB cable c. M.U.T.-III main harness A (Vehicles with CAN communication system) d. M.U.T.-III main harness B (Vehicles without CAN communication system) e. M.U.T.-III measure adapter f. M.U.T.-III trigger harness	⚠ CAUTION **For vehicles with CAN communication, use M.U.T.-III main harness A to send simulated vehicle speed. If you connect M.U.T.-III main harness B instead, the CAN communication does not function correctly.** Diagnosis code, service data and actuator test check.
a 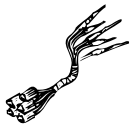 b 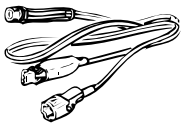 c 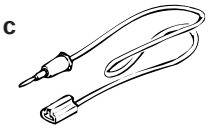 d DO NOT USE MB991223	MB991223 a. MB991219 b. MB991220 c. MB991221 d. MB991222	Harness set a. Check harness b. LED harness c. LED harness adapter d. Probe	Continuity check and voltage measurement at harness wire or connector a. For checking connector pin contact pressure b. For checking power supply circuit c. For checking power supply circuit d. For connecting a locally sourced tester

www.cargeek.ir

www.CarGeek.ir

Tool	Number	Name	Use
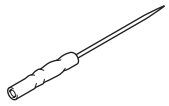 MB992006	MB992006	Extra fine probe	Continuity check and voltage measurement at harness wire or connector

SERVICE PRECAUTIONS <DISCHARGE HEADLAMP>

M1540100300151

Before checking the discharge headlamp related parts, be sure to read the following warnings and precautions carefully, and then perform necessary operations.

www.cargeek.ir

www.cargeek.ir

www.CarGeek.ir

⚠ DANGER

- ***Do not touch the socket and the connector while the headlamps are on. High voltage is applied to the bulb socket and connector during headlamp operation. The operator may be burnt or dead due to an electric shock by high voltage.***
- ***Do not attempt to use a tester to check them. If the bulb socket and connectors should be inspected using a tester, the operator may be burnt or dead due to an electric shock by high voltage.***
- ***Do not turn ON the headlamps while the controller or the bulb is removed. If the headlamps are turned ON with the controller or bulb removed, the operator may get burned by the bulb of a high temperature. The operator may be burnt or dead due to an electric shock by high voltage.***
- ***Before service work, turn the lighting switch OFF and disconnect the battery terminal and the controller connector in a dry place. Do not touch the components with wet hands. If you work on the components with wet hands or in wet conditions, the operator may be burnt or dead due to an electric shock by high voltage.***

⚠ WARNING

Do not illuminate the bare headlamp bulb. (Do not illuminate the headlamp using other than the vehicle power supply.) If the headlamp bulb illuminates without fitting it in the headlamp unit, it may burst due to rise in its internal pressure.

⚠ CAUTION

When reusing the controller with the discharge headlamp damaged, observe the inspection procedures for the related parts of the discharge headlamp before determining the reusability of the controller. If you fail to observe "How to check discharge headlamp components," the vehicle may be damaged.

1. CHECKING PROCEDURE FOR DISCHARGE HEADLAMP RELATED PARTS (INSPECTION PROCEDURE WHEN REUSING THE CONTROLLER)

1 – 1 VISUAL CHECK OF CONTROLLER (CASE)

If any of the check items below are found, replace the controller.

www.cargeek.ir

www.CarGeek.ir

Items to be checked	Why the controller should be replaced
Obvious deformation (warping, twisting, dents, nicks, chipped edges) of controller case	The printed circuit board or the element(s) may be cracked
Damaged connector (chipped or cracked plastics, or deformed terminal)	The damaged part(s) may cause poor connection or short circuit.

1 – 2 CHECK OF WIRING HARNESS BETWEEN CONTROLLER AND BULB

If any of the check items below are found, replace the wiring harness between the controller and the bulb.

⚠ ***DANGER***

If the wiring harness between the controller and the bulb is damaged, always replace it. Attempting to repair the wiring harness may cause a melted harness wire, or may result in a burn or death due to an electric shock by high voltage.

Items to be checked	Why the controller should be replaced
Wiring harness shield damaged	Abnormal noise may cause.
Damaged connector (chipped or cracked plastics, or deformed terminal)	The damaged part(s) may cause poor connection or short circuit.

1 – 3 CHECK OF CONTROLLER OPERATION

If any of the abnormalities below are found, replace the controller.

NOTE: Ensure that the headlamp control system and its circuit (power supply control at engine start and during steady illumination, high-voltage generating circuit, etc.) are working normally. Then, check whether any internal breakage has occurred in the controller. However, some internal breakage may not be found.

Check item (Check of illumination operation)
With the headlamp bulb in the cold state (with the lamp turned off for 10 minutes or more) and in warm state (after the lamp is illuminated for 15 minutes or more, it is turned off for 1 minute), turn ON and OFF the headlamp several times, and then check that the headlamp illuminates without fail.
Observe the headlamps until they illuminate steadily (approximately 5 minutes after switching on them). Check that the headlamps do not flash or flicker.
Turn on the headlamps for 30 minutes. Check that the brightness is the same between right and left lamps.
Turn on the headlamps for 30 minutes. Check that the headlamps do not flash or flicker for 30 minutes.

2. Troubleshooting procedure for discharge headlamp (diagnostic procedure for malfunctions)

1. Check that the connectors are connected securely and the fuse has not been blown.
2. Before troubleshooting, read through the "Symptom chart" to understand what and how you should do. Follow all the procedures carefully.
3. The components should be checked with their connectors disconnected.

www.cargeek.ir

www.CarGeek.ir

SYMPTOM CHART

Item to be checked	Trouble symptom		
	The headlamps do not illuminate.	The headlamps flicker.	The headlamps are dim.
Fuse	1	–	–
Wiring harness and connector	2	1	–
Column switch	3	–	–
Bulb	4	2	1
Controller	5	3	2
ETACS-ECU	6	4	–

NOTE:

1. *The numbers indicate the sequence in which the component is checked.*
2. *For the troubleshooting of other than the above, refer to Trouble Symptom Chart .*
3. *If ETACS-ECU fails, only the low-beam headlamps will illuminate as a fail-safe measure.*

TROUBLESHOOTING

STANDARD FLOW OF DIAGNOSTIC TROUBLESHOOTING

M1540104200305

Refer to GROUP 00 – Contents of troubleshooting .

DIAGNOSIS FUNCTION

M1540104300380

HOW TO READ DIAGNOSIS CODE

Refer to GROUP 00 – Diagnosis function .

HOW TO ERASE DIAGNOSIS CODE

Refer to GROUP 00 – Diagnosis function .

AFS WARNING LAMP AND AFS WARNING DISPLAY

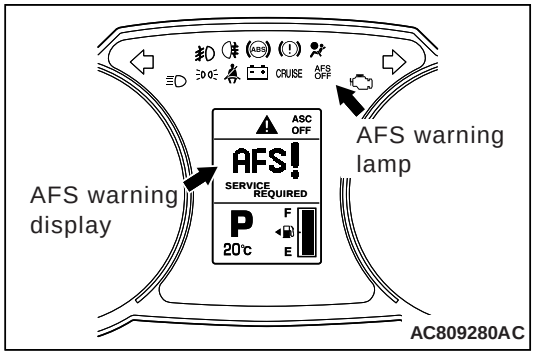

Parts name	Functional description
Combination meter (AFS warning lamp)	When an AFS abnormality occurs, the AFS warning lamp flashes to inform the driver of the AFS abnormality.
Combination meter (AFS warning display)	When an AFS abnormality occurs, indicates the warnings on the multi-information display of combination meter to inform the driver of the AFS abnormality.

DIAGNOSIS CODE CHART

M1540101400548

⚠ CAUTION

On troubleshooting, if the ignition switch is turned ON while disconnecting connector(s), diagnosis code(s) associated with other system may be set. On completion, confirm all systems for diagnosis code(s). If diagnosis code(s) are set, erase them all.

ETACS-ECU

Diagnosis code No.	Diagnostic item	Reference page
B16A2	Blown turn-signal lamp (LH) bulb	

www.cargeek.ir

www.CarGeek.ir

Diagnosis code No.	Diagnostic item	Reference page
B16A3	Turn-signal lamp (LH) short circuit	
B16A4	Blown turn-signal lamp (RH) bulb	
B16A5	Turn-signal lamp (RH) short circuit	

LIN <VEHICLES WITH LIGHTING CONTROL SENSOR>

Diagnosis code No.	Diagnostic item	Reference page
L0432	RLS* RS adaptation error	
L0434	RLS* light sensor error	
L0436	RLS* rain sensor error	

*NOTE: *: Rain light sensor (Lighting control sensor)*

HEADLAMP AUTOMATIC LEVELLING-ECU

Diagnosis code No.	Diagnostic item	Reference page
B2358	AFS OFF SW short circuit	
B2507	Steering wheel sensor error	
B2509	Steering wheel sensor not initialized	
B2511	ECU internal error (ROM)	
B2512	ECU internal error (EEPROM)	
U0001	Bus-off (CAN-C)	
U0100	Engine CAN time-out	
U0121	ASC/ABS CAN time-out	
U0126	Steering wheel sensor CAN time-out	
U0141	ETACS CAN time-out	
U1415	Coding not completed/failed	
U1417	Abnormality in coding data	

DIAGNOSIS CODE PROCEDURES

Code No.B16A2 Blown turn-signal lamp (LH) bulb

⚠ CAUTION

Before replacing the ECU, ensure that the power supply circuit, the earth circuit and the communication circuit are normal.

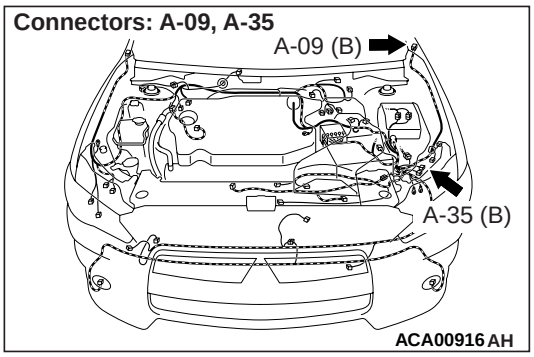

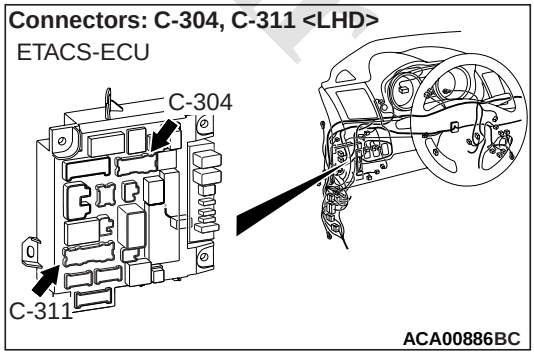

www.cargeek.ir

www.CarGeek.ir

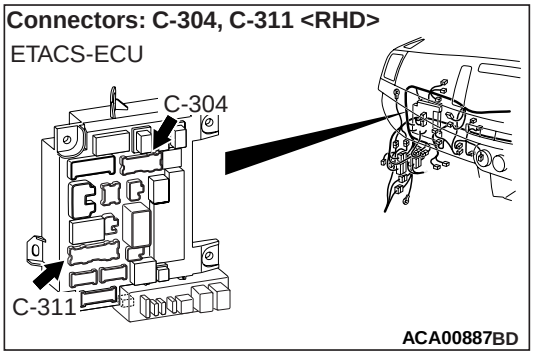

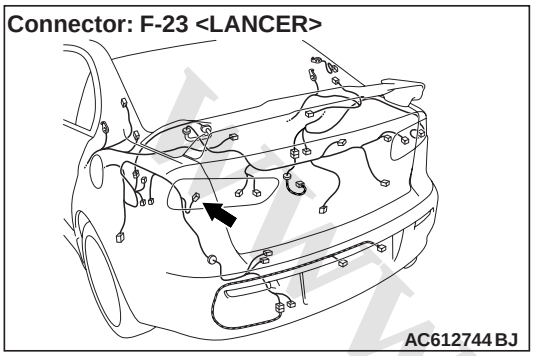

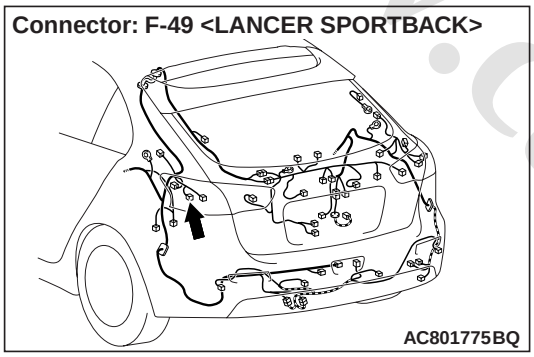

DIAGNOSTIC FUNCTION

When the left bulb of turn-signal lamp is blown, the ETACS-ECU sets diagnosis code No. B16A2.

JUDGEMENT CRITERIA

The ETACS-ECU sets diagnosis code No. B16A2 under the following conditions.

i. With the diagnosis code not set, if there is a malfunction to the left turn-signal lamp bulb, the blown left bulb counter counts once when the illumination of hazard or turn-signal lamp (left side) is attempted.
ii. If the blown left bulb counter reaches "3," diagnosis code No. B16A2 is set.

PROBABLE CAUSES

- Malfunction of turn-signal lamp bulb (left)
- Damaged harness wires and connectors
- Malfunction of the ETACS-ECU

DIAGNOSIS PROCEDURE

STEP 1. Bulb check

Check whether the bulb of turn-signal lamp which does not illuminate is normal.

Q: Is the check result normal?
YES : Go to Step 2.
NO : Replace the bulb of turn-signal lamp which does not illuminate.

STEP 2. Connector check: A-35 headlamp assembly (LH) connector, A-09 side turn-signal lamp (LH) connector and F-23 <LANCER> or F-49 <LANCER SPORTBACK> rear turn-signal lamp (LH) connector

Q: Is the check result normal?
YES : Go to Step 3.
NO : Repair the defective connector.

STEP 3. Resistance measurement at the A-35 front combination lamp (LH) connector, A-09 side turn-signal lamp (LH) connector and F-23 <LANCER> or F-49 <LANCER SPORTBACK> rear turn-signal lamp (LH) connector

(1) Disconnect the connector, and measure at the wiring harness side.
(2) Measure the resistance between the connector terminal of lamp which does not illuminate and the body earth.
- Measure the resistance between the A-35 headlamp assembly (LH) connector terminal No. 6 and the body earth.
- Measure the resistance between the A-09 side turn-signal lamp (LH) connector terminal No. 1 and the body earth.
- Measure the resistance between the F-23 <LANCER> or F-49 <LANCER SPORTBACK> rear turn-signal lamp (LH) connector terminal No. 1 and the body earth.

OK: Continuity exists (2 Ω or less)

Q: Is the check result normal?
YES : Go to Step 5.
NO : Go to Step 4.

www.cargeek.ir

STEP 4. Wiring harness check between A-35 headlamp assembly (LH) connector terminal No. 6, A-09 side turn-signal lamp (LH) connector terminal No. 1 or F-23 <LANCER> or F-49 <LANCER SPORTBACK> rear turn-signal lamp (LH) connector terminal No. 1 and the body earth

- Check the earth wires for open circuit.

Q: Is the check result normal?
YES : Go to Step 7.
NO : Repair the wiring harness.

STEP 5. Connector check: C-304 and C-311 ETACS-ECU connectors

Q: Is the check result normal?
YES : Go to Step 6.
NO : Repair the defective connector.

STEP 6. Wiring harnesses check between A-35 headlamp assembly (LH) connector terminal No. 3, A-09 side turn-signal lamp (LH) connector terminal No. 2 or F-23 <LANCER> or F-49 <LANCER SPORTBACK> rear turn-signal lamp (LH) connector terminal No. 2 and C-304 ETACS-ECU connector terminal No. 9 or C-311 ETACS-ECU connector terminal No. 18

NOTE: Before the wiring harness check, check the intermittent connector D-16, and then repair that if necessary.

- Check the output lines for open circuit.

Q: Is the check result normal?
YES : Go to Step 7.
NO : Repair the wiring harness.

STEP 7. Check whether the diagnosis code is reset.

(1) Erase the diagnosis code.
(2) Turn the ignition switch from "LOCK" (OFF) position to "ON" position.
(3) Check if diagnosis code is set.

Q: Is the diagnosis code set?
YES : Replace the ETACS-ECU.
NO : The trouble can be an intermittent malfunction (Refer to GROUP 00 – How to use Troubleshooting/inspection Service Points – How to Cope with Intermittent Malfunction).

Code No.B16A3 Turn-signal lamp (LH) short circuit

⚠ CAUTION
Before replacing the ECU, ensure that the power supply circuit, the earth circuit and the communication circuit are normal.

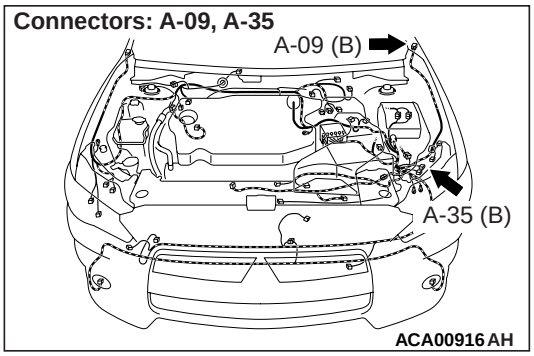

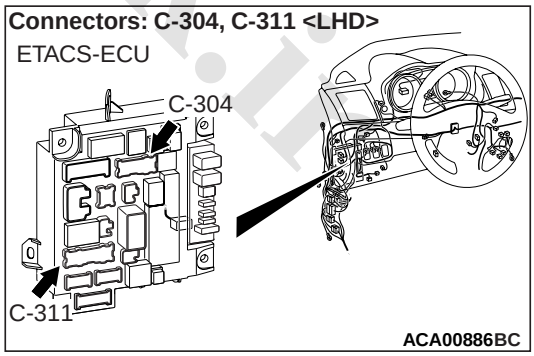

www.cargeek.ir

www.CarGeek.ir

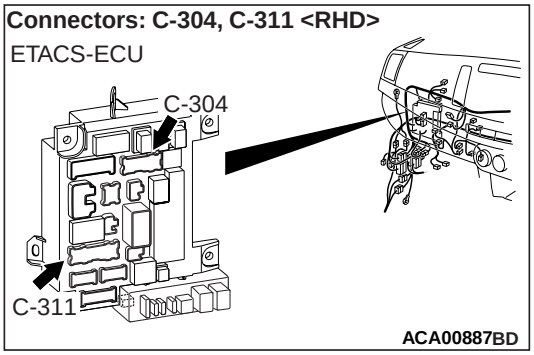

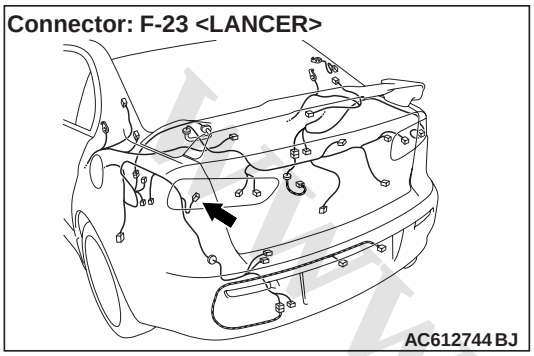

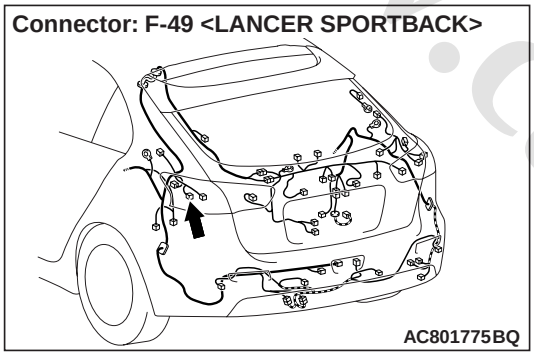

DIAGNOSTIC FUNCTION

When the left wiring harness of turn-signal lamp is short circuited, the ETACS-ECU sets diagnosis code No. B16A3.

JUDGEMENT CRITERIA

With the diagnosis code not set, when the short circuit is detected three times consecutively, the ETACS-ECU sets the diagnosis code No. B16A3.

PROBABLE CAUSES

- Damaged harness wires and connectors
- Malfunction of the ETACS-ECU

DIAGNOSIS PROCEDURE

STEP 1. Connector check: A-35 headlamp assembly (LH) connector, A-09 side turn-signal lamp (LH) connector and F-23 <LANCER> or F-49 <LANCER SPORTBACK> rear turn-signal lamp (LH) connector

Q: Is the check result normal?
YES : Go to Step 2.
NO : Repair the defective connector.

STEP 2. Connector check: C-304 and C-311 ETACS-ECU connectors

Q: Is the check result normal?
YES : Go to Step 3.
NO : Repair the defective connector.

STEP 3. Wiring harnesses check between A-35 headlamp assembly (LH) connector terminal No. 3, A-09 side turn-signal lamp (LH) connector terminal No. 2 or F-23 <LANCER> or F-49 <LANCER SPORTBACK> rear turn-signal lamp (LH) connector terminal No. 2 and C-304 ETACS-ECU connector terminal No. 9 or C-311 ETACS-ECU connector terminal No. 18

NOTE: Before the wiring harness check, check the intermittent connector D-16, and then repair that if necessary.

- Check the output lines for short circuit.

Q: Is the check result normal?
YES : Go to Step 4.
NO : Repair the wiring harness.

STEP 4. Check whether the diagnosis code is reset.

(1) Erase the diagnosis code.
(2) Turn the ignition switch from "LOCK" (OFF) position to "ON" position.
(3) Check if diagnosis code is set.

Q: Is the diagnosis code set?
YES : Replace the ETACS-ECU.
NO : The trouble can be an intermittent malfunction (Refer to GROUP 00 – How to use Troubleshooting/inspection Service Points – How to Cope with Intermittent Malfunction).

www.cargeek.ir

www.CarGeek.ir

Code No.B16A4 Blown turn-signal lamp (RH) bulb

⚠ CAUTION

Before replacing the ECU, ensure that the power supply circuit, the earth circuit and the communication circuit are normal.

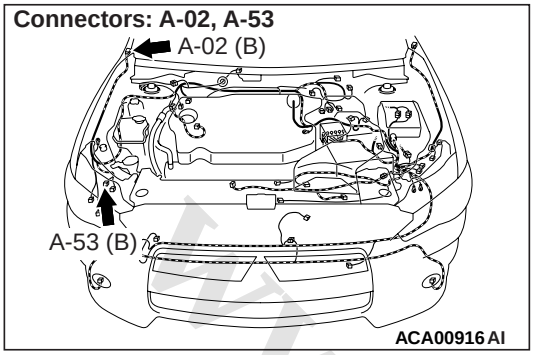

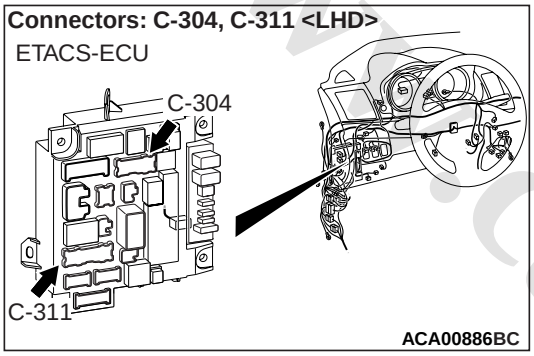

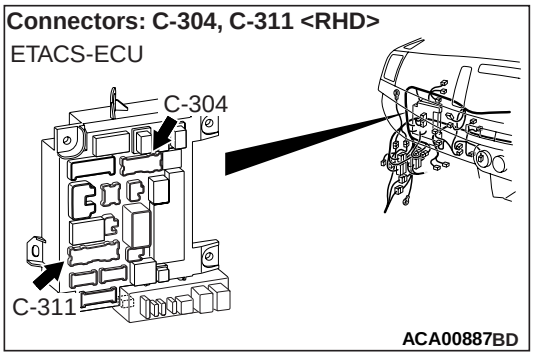

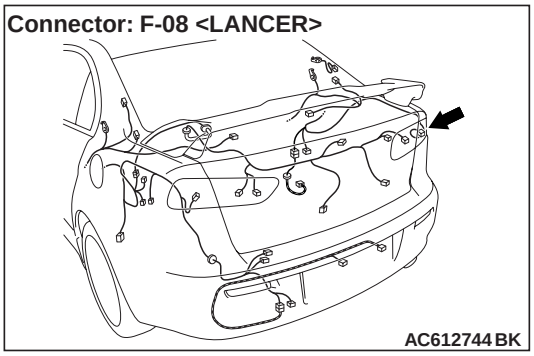

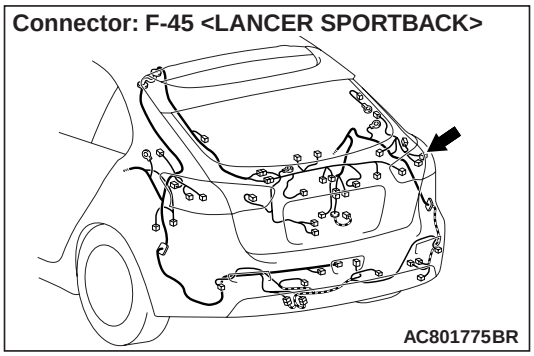

DIAGNOSTIC FUNCTION

When the right bulb of turn-signal lamp is blown, the ETACS-ECU sets diagnosis code No. B16A4.

JUDGEMENT CRITERIA

The ETACS-ECU sets diagnosis code No. B16A4 under the following conditions.

i. With the diagnosis code not set, if there is a malfunction to the right turn-signal lamp bulb, the blown right bulb counter counts once when the illumination of hazard or turn-signal lamp (right side) is attempted.
ii. If the blown right bulb counter reaches "3," the diagnosis code No. B16A4 is set.

PROBABLE CAUSES

- Malfunction of turn-signal lamp bulb (right side)
- Damaged harness wires and connectors
- Malfunction of the ETACS-ECU

DIAGNOSIS PROCEDURE

STEP 1. Bulb check

Check whether the bulb of turn-signal lamp which does not illuminate is normal.

Q: Is the check result normal?
YES : Go to Step 2.
NO : Replace the bulb of turn-signal lamp which does not illuminate.

STEP 2. Connector check: A-53 headlamp assembly (RH) connector, A-02 side turn-signal lamp (RH) connector and F-08 <LANCER> or F-45 <LANCER SPORTBACK> rear turn-signal lamp (RH) connector

Q: Is the check result normal?
YES : Go to Step 3.
NO : Repair the defective connector.

www.cargeek.ir

www.CarGeek.ir

STEP 3. Resistance measurement at the A-53 headlamp assembly (RH) connector, A-02 side turn-signal lamp (RH) connector and F-08 <LANCER> or F-45 <LANCER SPORTBACK> rear turn-signal lamp (RH) connector

(1) Disconnect the connector, and measure at the wiring harness side.
(2) Measure the resistance between the connector terminal of lamp which does not illuminate and the body earth.
- Measure the resistance between the A-53 headlamp assembly (RH) connector terminal No. 6 and the body earth.
- Measure the resistance between the A-02 side turn-signal lamp (RH) connector terminal No. 1 and the body earth.
- Measure the resistance between the F-08 <LANCER> or F-45 <LANCER SPORTBACK> rear turn-signal lamp (RH) connector terminal No. 1 and the body earth.

OK: Continuity exists (2 Ω or less)

Q: Is the check result normal?
YES : Go to Step 5.
NO : Go to Step 4.

STEP 4. Check the wiring harness between A-53 headlamp assembly (RH) connector terminal No. 6, A-02 side turn-signal lamp (RH) connector terminal No. 1 or F-08 <LANCER> or F-45 <LANCER SPORTBACK> rear turn-signal lamp (RH) connector terminal No. 1 and the body earth.
- Check the earth wires for open circuit.

Q: Is the check result normal?
YES : Go to Step 7.
NO : Repair the wiring harness.

STEP 5. Connector check: C-304 and C-311 ETACS-ECU connectors

Q: Is the check result normal?
YES : Go to Step 6.
NO : Repair the defective connector.

STEP 6. Check the wiring harness between A-53 headlamp assembly (RH) connector terminal No. 3, A-02 side turn-signal lamp (RH) connector terminal No. 2 or F-08 <LANCER> or F-45 <LANCER SPORTBACK> rear turn-signal lamp (RH) connector terminal No. 2 and C-304 ETACS-ECU connector terminal No. 16 or C-311 ETACS-ECU connector terminal No. 19.

NOTE: Before the wiring harness check, check the intermittent connector D-12, and repair them if necessary.
- Check the output lines for open circuit.

Q: Is the check result normal?
YES : Go to Step 7.
NO : Repair the wiring harness.

STEP 7. Check whether the diagnosis code is reset.

(1) Erase the diagnosis code.
(2) Turn the ignition switch from "LOCK" (OFF) position to "ON" position.
(3) Check if diagnosis code is set.

Q: Is the diagnosis code set?
YES : Replace the ETACS-ECU.
NO : The trouble can be an intermittent malfunction (Refer to GROUP 00 – How to use Troubleshooting/inspection Service Points – How to Cope with Intermittent Malfunction).

Code No.B16A5 Turn-signal lamp (RH) short circuit

⚠ CAUTION
Before replacing the ECU, ensure that the power supply circuit, the earth circuit and the communication circuit are normal.

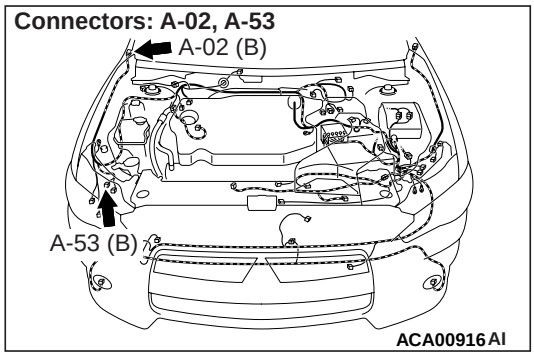

www.cargeek.ir

www.CarGeek.ir

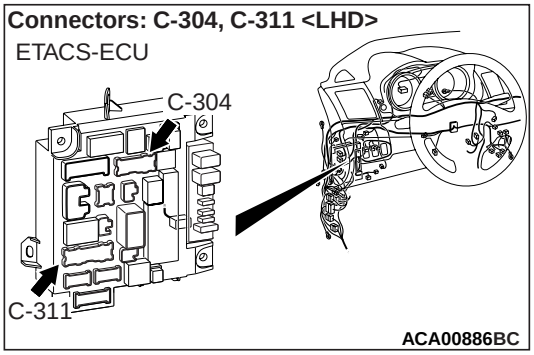

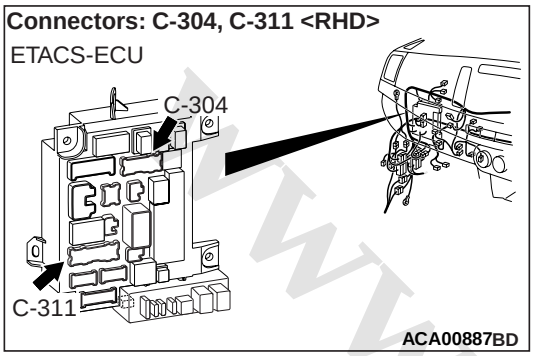

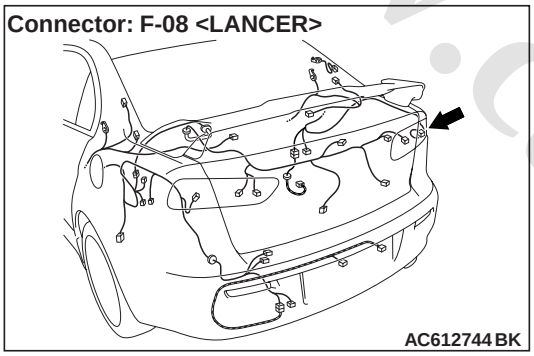

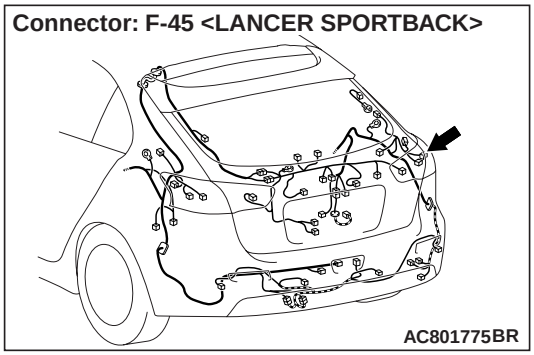

DIAGNOSTIC FUNCTION

When the right wiring harness of turn-signal lamp is short circuited, the ETACS-ECU sets the diagnosis code No. B16A5.

JUDGEMENT CRITERIA

With the diagnosis code not set, when the short circuit is detected three times consecutively, the ETACS-ECU sets the diagnosis code No. B16A5.

PROBABLE CAUSES

- Damaged harness wires and connectors
- Malfunction of the ETACS-ECU

DIAGNOSIS PROCEDURE

STEP 1. Connector check: A-53 headlamp assembly (RH) connector, A-02 side turn-signal lamp (RH) connector and F-08 <LANCER> or F-45 <LANCER SPORTBACK> rear turn-signal lamp (RH) connector

Q: Is the check result normal?
YES : Go to Step 2.
NO : Repair the defective connector.

STEP 2. Connector check: C-304 and C-311 ETACS-ECU connectors

Q: Is the check result normal?
YES : Go to Step 3.
NO : Repair the defective connector.

STEP 3. Check the wiring harness between A-53 headlamp assembly (RH) connector terminal No. 3, A-02 side turn-signal lamp (RH) connector terminal No. 2 or F-08 <LANCER> or F-45 <LANCER SPORTBACK> rear turn-signal lamp (RH) connector terminal No. 2 and C-304 ETACS-ECU connector terminal No. 16 or C-311 ETACS-ECU connector terminal No. 19.

NOTE: Before the wiring harness check, check the intermittent connector D-12, and repair them if necessary.

- Check the output lines for short circuit.

Q: Is the check result normal?
YES : Go to Step 4.
NO : Repair the wiring harness.

STEP 4. Check whether the diagnosis code is reset.

(1) Erase the diagnosis code.
(2) Turn the ignition switch from "LOCK" (OFF) position to "ON" position.
(3) Check if diagnosis code is set.

Q: Is the diagnosis code set?
YES : Replace the ETACS-ECU.
NO : The trouble can be an intermittent malfunction (Refer to GROUP 00 – How to use Troubleshooting/inspection Service Points – How to Cope with Intermittent Malfunction).

www.cargeek.ir

www.CarGeek.ir

Code No.L0432 RLS RS adaptation error

DIAGNOSTIC FUNCTION
When the lighting control sensor is installed with the wrong procedure, code No. L0432 is stored by LIN.

COMMENTS ON TROUBLE SYMPTOM
The lighting control sensor may have been installed with the wrong procedure.
- Incorrect installation procedure: Connect the connector before mounting the lighting control sensor onto the optical coupler of the windshield.
- Correct installation procedure: Mount the lighting control sensor onto the optical coupler of the windshield. Wipe the windshield surface thoroughly, and check that the surface is dry. Then, connect the connector.

PROBABLE CAUSES
- Lighting control sensor improperly installed
- Lighting control sensor (rain sensor) abnormal operation

DIAGNOSIS PROCEDURE

STEP 1. Check whether the diagnosis code is reset.
Disconnect the connector from the lighting control sensor, and connect the connector to the lighting control sensor again. Then, check again if the diagnosis code is set to LIN.
(1) Disconnect the connector of lighting control sensor, and connect it again.
NOTE: When connecting the connector, follow the correct installation procedure.
(2) Turn the ignition switch from "LOCK" (OFF) position to "ON" position.
(3) Check if diagnosis code is set.

Q: Is the diagnosis code set?
YES : Go to Step 2.
NO : The lighting control sensor is installed with the wrong procedure.

STEP 2. Lighting control sensor installation surface check
Visually check the presence of scratches or air bubbles (diameter of 5 mm or more) on the windshield to which the lighting control sensor is installed. In addition, visually check that the optical coupler is not broken and that the lighting control sensor can be installed.

Q: Is the check result normal?
YES : Go to Step 3.
NO : Replace the windshield (Refer to GROUP 42A – Windshield)

STEP 3. Check whether the diagnosis code is reset.
Check again if the diagnosis code is set to LIN.
(1) Wipe the windshield surface of the lighting control sensor section thoroughly, and check that the surface is dry. Then, perform the lighting control sensor (rain sensor) adaptation. <Refer to GROUP 51 – Lighting Control Sensor (Rain Sensor) Adaptation >.
(2) Turn the ignition switch from "LOCK" (OFF) position to "ON" position.
(3) Check if diagnosis code is set.

Q: Is the diagnosis code set?
YES : Replace the lighting control sensor.
NO : The trouble can be an intermittent malfunction (Refer to GROUP 00 – How to use Troubleshooting/inspection Service Points – How to Cope with Intermittent Malfunction).

Code No.L0434 RLS light sensor error
Code No.L0436 RLS rain sensor error

DIAGNOSTIC FUNCTION
If a trouble occurs in the lighting control sensor, code Nos. L0434 and L0436 are stored to LIN.

PROBABLE CAUSE
Malfunction of the lighting control sensor

DIAGNOSIS PROCEDURE

Check whether the diagnosis code is reset.
Check again if the diagnosis code is set to LIN.
(1) Erase the diagnosis code.
(2) Turn the ignition switch from "LOCK" (OFF) position to "ON" position.

www.cargeek.ir

www.CarGeek.ir

(3) Check if diagnosis code is set.

Q: Is the diagnosis code set?

YES : Replace the lighting control sensor.
NO : The trouble can be an intermittent malfunction (Refer to GROUP 00 – How to use Troubleshooting/inspection Service Points – How to Cope with Intermittent Malfunction).

Code No. B2358 AFS OFF SW short circuit

⚠ CAUTION
Before replacing the ECU, ensure that the power supply circuit, the earth circuit and the communication circuit are normal.

DIAGNOSTIC FUNCTION
If a trouble occurs in headlamp automatic levelling-ECU, AFS warnings are displayed on the multi information display and code No. B2358 is stored.

JUDGEMENT CRITERIA
The headlamp automatic levelling-ECU detects an internal circuit error.

PROBABLE CAUSE
Malfunction of the headlamp automatic levelling-ECU

DIAGNOSIS PROCEDURE

Check whether the diagnosis code is reset.
Check again if the diagnosis code is set to headlamp automatic levelling-ECU.
(1) Erase the diagnosis code.
(2) Turn the ignition switch from "LOCK" (OFF) position to "ON" position.
(3) Check if diagnosis code is set after 60 seconds.

Q: Is the diagnosis code set?
YES : Replace the headlamp automatic levelling-ECU.
NO : The trouble can be an intermittent malfunction (Refer to GROUP 00 – How to use Troubleshooting/inspection Service Points – How to Cope with Intermittent Malfunction).

Code No. B2507 Steering wheel sensor error

⚠ CAUTION
- **If there is any problem in the CAN bus lines, an incorrect diagnosis code may be set. Prior to this diagnosis, always diagnose the CAN bus lines.**
- **Before replacing the ECU, ensure that the power supply circuit, the earth circuit and the communication circuit are normal.**

DIAGNOSTIC FUNCTION
If a trouble of the steering wheel sensor occurs or the neutral position is not learned, AFS warnings are displayed on the multi information display and the code No. B2507 is stored.

JUDGEMENT CRITERIA
The internal error or the neutral position not learned signal is received from the steering wheel sensor for 2 seconds continuously.

PROBABLE CAUSES
- Malfunction of the steering wheel sensor
- Steering wheel sensor neutral position not learned
- Malfunction of the headlamp automatic levelling-ECU.

DIAGNOSIS PROCEDURE

STEP 1. M.U.T.-III CAN bus diagnostics
Use the M.U.T.-III to diagnose the CAN bus lines.

Q: Is the check result normal?
YES (vehicles with ASC) : Go to Step 2.
YES (vehicles without ASC) : Go to Step 3.
NO : Repair the CAN bus line (Refer to GROUP 54C – Troubleshooting).

STEP 2. M.U.T.-III other system diagnosis code
Check if diagnosis code is set to the steering wheel sensor.

Q: Is the diagnosis code set?

www.cargeek.ir

www.CarGeek.ir

YES : Troubleshoot the steering wheel sensor. Refer to GROUP 35C – Troubleshooting .
NO : Go to Step 5.

STEP 3. Check whether the diagnosis code is reset.

When the steering wheel sensor neutral position has been learned, check if the diagnosis code is set to headlamp automatic levelling-ECU.

(1) When the steering wheel sensor neutral position has been initialised, make the sensor learn the neutral point. Refer to GROUP 35C – On-vehicle service .
(2) Erase the diagnosis code.
(3) Turn the ignition switch from "LOCK" (OFF) position to "ON" position.
(4) Check if diagnosis code is set.

Q: Is the diagnosis code set?
YES : Go to Step 4.
NO : The diagnosis is complete.

STEP 4. M.U.T.-III data list

Turn the steering wheel.

Item No.	Item name	Normal condition
Item 5	Steering angle (CAN input)	The display on M.U.T.-III changes together with the steering wheel operation.
Item 7	SAS status (CAN input)	Normal

OK: Normal condition is displayed.

Q: Is the check result normal?
YES : Go to Step 5.
NO : Replace the steering wheel sensor.

STEP 5. Check whether the diagnosis code is reset.

Check again if the diagnosis code is set to headlamp automatic levelling-ECU.

(1) Erase the diagnosis code.
(2) Turn the ignition switch from "LOCK" (OFF) position to "ON" position.
(3) Check if diagnosis code is set.

Q: Is the diagnosis code set?
YES : Replace the headlamp automatic levelling-ECU.
NO : The trouble can be an intermittent malfunction (Refer to GROUP 00 – How to use Troubleshooting/inspection Service Points – How to Cope with Intermittent Malfunction).

Code No. B2509 Steering wheel sensor not initialized

⚠ CAUTION

- **If there is any problem in the CAN bus lines, an incorrect diagnosis code may be set. Prior to this diagnosis, always diagnose the CAN bus lines.**
- **Before replacing the ECU, ensure that the power supply circuit, the earth circuit and the communication circuit are normal.**

DIAGNOSTIC FUNCTION

If a trouble of the steering wheel sensor occurs or the neutral position is not learned, AFS warnings are displayed on the multi information display and the code No. B2509 is stored. When the neutral position of the steering wheel sensor is learned, the code No. B2509 is cleared automatically.

JUDGEMENT CRITERIA

The neutral position not learned signal is received from the steering wheel sensor for 2 seconds continuously.

PROBABLE CAUSES

- Malfunction of the steering wheel sensor
- Steering wheel sensor neutral position not learned

www.cargeek.ir

- Malfunction of the headlamp automatic levelling-ECU

DIAGNOSIS PROCEDURE

STEP 1. M.U.T.-III CAN bus diagnostics
Use the M.U.T.-III to diagnose the CAN bus lines.

Q: Is the check result normal?
YES : Go to Step 2.
NO : Repair the CAN bus line (Refer to GROUP 54C – Troubleshooting).

STEP 2. Check whether the diagnosis code is reset.
When the steering wheel sensor neutral position has been learned, check if the diagnosis code is set to headlamp automatic levelling-ECU.
(1) When the steering wheel sensor neutral position has been initialised, make the sensor learn the neutral point. Refer to GROUP 35C – On-vehicle service .
(2) Erase the diagnosis code.
(3) Turn the ignition switch from "LOCK" (OFF) position to "ON" position.
(4) Check if diagnosis code is set.

Q: Is the diagnosis code set?
YES : Go to Step 3.
NO : The diagnosis is complete.

STEP 3. M.U.T.-III data list
Turn the steering wheel.

Item No.	Item name	Normal condition
Item 7	SAS status (CAN input)	Normal

OK: Normal condition is displayed.

Q: Is the check result normal?
YES : Go to Step 4.
NO : Replace the steering wheel sensor.

STEP 4. Check whether the diagnosis code is reset.
Check again if the diagnosis code is set to headlamp automatic levelling-ECU.
(1) Turn the ignition switch from "LOCK" (OFF) position to "ON" position.
(2) Check if diagnosis code is set.

Q: Is the diagnosis code set?
YES : Replace the headlamp automatic levelling-ECU.
NO : The trouble can be an intermittent malfunction (Refer to GROUP 00 – How to use Troubleshooting/inspection Service Points – How to Cope with Intermittent Malfunction).

Code No. B2511 ECU internal error (ROM)

⚠ CAUTION
Before replacing the ECU, ensure that the power supply circuit, the earth circuit and the communication circuit are normal.

DIAGNOSTIC FUNCTION
If a trouble occurs in headlamp automatic levelling-ECU, AFS or headlamp automatic levelling system warnings are displayed on the multi information display and code No. B2511 is stored.

JUDGEMENT CRITERIA
The headlamp automatic levelling-ECU detects a ROM data error.

PROBABLE CAUSE
Malfunction of the headlamp automatic levelling-ECU

DIAGNOSIS PROCEDURE

Check whether the diagnosis code is reset.
Check again if the diagnosis code is set to headlamp automatic levelling-ECU.
(1) Erase the diagnosis code.
(2) Turn the ignition switch from "LOCK" (OFF) position to "ON" position.
(3) Check if diagnosis code is set.

Q: Is the diagnosis code set?
YES : Replace the headlamp automatic levelling-ECU.
NO : The trouble can be an intermittent malfunction (Refer to GROUP 00 – How to use Troubleshooting/inspection Service Points – How to Cope with Intermittent Malfunction).

www.cargeek.ir

www.CarGeek.ir

Code No. B2512 ECU internal error (EEPROM)

⚠ CAUTION

Before replacing the ECU, ensure that the power supply circuit, the earth circuit and the communication circuit are normal.

DIAGNOSTIC FUNCTION

If a trouble occurs in headlamp automatic levelling-ECU, AFS or headlamp automatic levelling system warnings are displayed on the multi information display and code No. B2512 is stored.

JUDGEMENT CRITERIA

The headlamp automatic levelling-ECU detects the data error at EEPROM reading or writing.

PROBABLE CAUSE

Malfunction of the headlamp automatic levelling-ECU

DIAGNOSIS PROCEDURE

Check whether the diagnosis code is reset.

Check again if the diagnosis code is set to headlamp automatic levelling-ECU.

(1) Erase the diagnosis code.
(2) Turn the ignition switch from "LOCK" (OFF) position to "ON" position.
(3) Check if diagnosis code is set.

Q: Is the diagnosis code set?

YES : Replace the headlamp automatic levelling-ECU.

NO : The trouble can be an intermittent malfunction (Refer to GROUP 00 – How to use Troubleshooting/inspection Service Points – How to Cope with Intermittent Malfunction).

Code No.U0001 Bus off (CAN-C)

⚠ CAUTION

- **If there is any problem in the CAN bus lines, an incorrect diagnosis code may be set. Prior to this diagnosis, always diagnose the CAN bus lines.**
- **Before replacing the ECU, ensure that the power supply circuit, the earth circuit and the communication circuit are normal.**

DIAGNOSTIC FUNCTION

When headlamp automatic levelling-ECU is returned from the bus-off state or when the bus-off error is indicated to the headlamp automatic levelling-ECU state, AFS warnings are displayed on the multi information display and code No. U0001 (CAN-C) is stored.

JUDGEMENT CRITERIA

The headlamp automatic levelling-ECU judges the bus-off error.

PROBABLE CAUSES

- Malfunction of the headlamp automatic levelling-ECU
- Malfunction of wiring harness or connector

DIAGNOSIS PROCEDURE

STEP 1. M.U.T.-III CAN bus diagnostics

Use the M.U.T.-III to diagnose the CAN bus lines.

Q: Is the check result normal?

YES : Go to Step 2.

NO : Repair the CAN bus line (Refer to GROUP 54C – Troubleshooting).

STEP 2. Check whether the diagnosis code is reset.

Check again if the diagnosis code is set to the headlamp automatic levelling-ECU.

(1) Erase the diagnosis code.
(2) Turn the ignition switch from "LOCK" (OFF) position to "ON" position.
(3) Check if diagnosis code is set.

Q: Is the diagnosis code set?

YES : Replace the headlamp automatic levelling-ECU.

NO : The trouble can be an intermittent malfunction (Refer to GROUP 00 – How to use Troubleshooting/inspection Service Points – How to Cope with Intermittent Malfunction).

www.cargeek.ir

Code No. U0100 Engine CAN time-out

⚠ CAUTION
- **If the diagnosis code No. U0100 is set, be sure to diagnose the CAN bus line.**
- **Before replacing the ECU, ensure that the power supply circuit, the earth circuit and the communication circuit are normal.**

DIAGNOSTIC FUNCTION
The headlamp automatic levelling-ECU sets diagnosis code No.U0100 when it cannot receive signals from the engine ECU.

JUDGEMENT CRITERIA
The headlamp automatic levelling-ECU cannot receive the signal from the engine-ECU via the CAN bus line.

PROBABLE CAUSES
- Malfunction of CAN bus line
- Malfunction of engine-ECU
- Malfunction of headlamp automatic levelling-ECU

DIAGNOSIS PROCEDURE

STEP 1. M.U.T.-III CAN bus diagnostics
Use the M.U.T.-III to diagnose the CAN bus lines.

Q: Is the check result normal?
YES : Go to Step 2.
NO : Repair the CAN bus line (Refer to GROUP 54C – Troubleshooting).

STEP 2. M.U.T.-III other system diagnosis code
Check if diagnosis code is set to the engine-ECU.

Q: Is the diagnosis code set?
YES : Troubleshoot the engine (Refer to GROUP 13A – Troubleshooting).
NO : Go to Step 3.

STEP 3. Check the M.U.T.-III Diagnosis code for other systems
Check if the diagnosis code No. U0100 is set to ETACS-ECU.

Q: Is the diagnosis code set?
YES : Go to Step 4.
NO : Go to Step 5.

STEP 4. Diagnosis code recheck
Check again if the diagnosis code is set to the headlamp automatic levelling-ECU.
(1) Erase the diagnosis code.
(2) Turn the ignition switch from the LOCK (OFF) position to the ON position.
(3) Check if the diagnosis code is set.

Q: Is the diagnosis code set?
YES : Replace the engine-ECU.
NO : A poor connection, open circuit, or other intermittent malfunction in the CAN bus line between the headlamp automatic levelling-ECU and the engine-ECU. (Refer to GROUP 00 – How to Use Troubleshooting/ Inspection Service Points - How to Cope with Intermittent Malfunction .)

STEP 5. Diagnosis code recheck
Check again if the diagnosis code is set to the headlamp automatic levelling-ECU.
(1) Erase the diagnosis code.
(2) Turn the ignition switch from the LOCK (OFF) position to the ON position.
(3) Check if the diagnosis code is set.

Q: Is the diagnosis code set?
YES : Replace the headlamp automatic levelling-ECU.
NO : A poor connection, open circuit, or other intermittent malfunction in the CAN bus line between the headlamp automatic levelling-ECU and the engine-ECU. (Refer to GROUP 00 – How to Use Troubleshooting/ Inspection Service Points - How to Cope with Intermittent Malfunction .)

www.cargeek.ir

www.CarGeek.ir

Code No.U0121 ASC/ABS CAN time-out

⚠ CAUTION
- **If the diagnosis code No. U0121 is set, be sure to diagnose the CAN bus line.**
- **Before replacing the ECU, ensure that the power supply circuit, the earth circuit and the communication circuit are normal.**

DIAGNOSTIC FUNCTION
The headlamp automatic levelling-ECU sets diagnosis code No.U0121 when it cannot receive signals from the ABS-ECU or ASC-ECU. In addition, the AFS or headlamp automatic levelling system warning is displayed on the multi information display.

JUDGEMENT CRITERIA
The headlamp automatic levelling-ECU cannot receive the signal from the ABS-ECU or ASC-ECU via the CAN bus line.

PROBABLE CAUSES
- Malfunction of CAN bus line
- Malfunction of ABS-ECU or ASC-ECU
- Malfunction of headlamp automatic levelling-ECU

DIAGNOSIS PROCEDURE

STEP 1. M.U.T.-III CAN bus diagnostics
Use the M.U.T.-III to diagnose the CAN bus lines.

Q: Is the check result normal?
YES : Go to Step 2.
NO : Repair the CAN bus line (Refer to GROUP 54C – Troubleshooting).

STEP 2. M.U.T.-III other system diagnosis code
Check if diagnosis code is set to the ABS-ECU or ASC-ECU.

Q: Is the diagnosis code set to the any of the above?
Set to the ABS-ECU. : Troubleshoot the ABS. Refer to GROUP 35B – Troubleshooting .
Set to the ASC-ECU. : Troubleshoot the ASC. Refer to GROUP 35C – Troubleshooting .
NO : Go to Step 3.

STEP 3. Check the M.U.T.-III Diagnosis code for other systems
Check if the diagnosis code No. U0121 is set to ETACS-ECU.

Q: Is the diagnosis code set?
YES : Go to Step 4.
NO : Go to Step 5.

STEP 4. Diagnosis code recheck
Check again if the diagnosis code is set to the headlamp automatic levelling-ECU.
(1) Erase the diagnosis code.
(2) Turn the ignition switch from the LOCK (OFF) position to the ON position.
(3) Check if the diagnosis code is set.

Q: Is the diagnosis code set?
YES : Replace the ABS-ECU or ASC-ECU.
NO : A poor connection, open circuit, or other intermittent malfunction in the CAN bus line between the headlamp automatic levelling-ECU and the ABS-ECU or ASC-ECU. (Refer to GROUP 00 – How to Use Troubleshooting/Inspection Service Points - How to Cope with Intermittent Malfunction .)

STEP 5. Diagnosis code recheck
Check again if the diagnosis code is set to the headlamp automatic levelling-ECU.
(1) Erase the diagnosis code.
(2) Turn the ignition switch from the LOCK (OFF) position to the ON position.
(3) Check if the diagnosis code is set.

Q: Is the diagnosis code set?
YES : Replace the headlamp automatic levelling-ECU.
NO : A poor connection, open circuit, or other intermittent malfunction in the CAN bus line between the headlamp automatic levelling-ECU and the ABS-ECU or ASC-ECU. (Refer to GROUP 00 – How to Use Troubleshooting/Inspection Service Points - How to Cope with Intermittent Malfunction .)

www.cargeek.ir

www.CarGeek.ir

Code No. U0126 Steering wheel sensor CAN time-out

⚠ CAUTION
- **If the diagnosis code No. U0126 is set, be sure to diagnose the CAN bus line.**
- **Before replacing the ECU, ensure that the power supply circuit, the earth circuit and the communication circuit are normal.**

DIAGNOSTIC FUNCTION
The headlamp automatic levelling-ECU sets diagnosis code No. U0126 when it cannot receive signals from the steering wheel sensor. In addition, the AFS warning is displayed on the multi information display.

JUDGEMENT CRITERIA
The headlamp automatic levelling-ECU cannot receive the signal from the steering wheel sensor via the CAN bus line.

PROBABLE CAUSES
- Malfunction of CAN bus line
- Malfunction of steering wheel sensor
- Malfunction of headlamp automatic levelling-ECU

DIAGNOSIS PROCEDURE

STEP 1. M.U.T.-III CAN bus diagnostics
Use the M.U.T.-III to diagnose the CAN bus lines.

Q: Is the check result normal?
YES : Go to Step 2.
NO : Repair the CAN bus line (Refer to GROUP 54C – Troubleshooting).

STEP 2. M.U.T.-III other system diagnosis code
Check if diagnosis code is set to the steering wheel sensor.

Q: Is the diagnosis code set?
YES : Troubleshoot the steering wheel sensor. Refer to GROUP 35C – Troubleshooting .
NO : Go to Step 3.

STEP 3. Check the M.U.T.-III Diagnosis code for other systems
Check if the diagnosis code No. U0126 is set to ETACS-ECU.

Q: Is the diagnosis code set?
YES : Go to Step 4.
NO : Go to Step 5.

STEP 4. Diagnosis code recheck
Check again if the diagnosis code is set to the headlamp automatic levelling-ECU.
(1) Erase the diagnosis code.
(2) Turn the ignition switch from the LOCK (OFF) position to the ON position.
(3) Check if the diagnosis code is set.

Q: Is the diagnosis code set?
YES : Replace the steering wheel sensor.
NO : A poor connection, open circuit, or other intermittent malfunction in the CAN bus line between the headlamp automatic levelling-ECU and the steering wheel sensor. (Refer to GROUP 00 – How to Use Troubleshooting/Inspection Service Points - How to Cope with Intermittent Malfunction .)

STEP 5. Diagnosis code recheck
Check again if the diagnosis code is set to the headlamp automatic levelling-ECU.
(1) Erase the diagnosis code.
(2) Turn the ignition switch from the LOCK (OFF) position to the ON position.
(3) Check if the diagnosis code is set.

Q: Is the diagnosis code set?
YES : Replace the headlamp automatic levelling-ECU.
NO : A poor connection, open circuit, or other intermittent malfunction in the CAN bus line between the headlamp automatic levelling-ECU and the steering wheel sensor. (Refer to GROUP 00 – How to Use Troubleshooting/Inspection Service Points - How to Cope with Intermittent Malfunction .)

www.cargeek.ir

www.CarGeek.ir

Code No. U0141 ETACS CAN Time-out

⚠ CAUTION
- **If the diagnosis code No. U0141 is set, be sure to diagnose the CAN bus line.**
- **Before replacing the ECU, ensure that the power supply circuit, the earth circuit and the communication circuit are normal.**

DIAGNOSTIC FUNCTION
The headlamp automatic levelling-ECU sets diagnosis code No.U0141 when it cannot receive signals from the ETACS-ECU.

JUDGEMENT CRITERIA
The headlamp automatic levelling-ECU cannot receive the signal from the ETACS-ECU via the CAN bus line.

PROBABLE CAUSES
- Malfunction of CAN bus line
- Malfunction of ETACS-ECU
- Malfunction of headlamp automatic levelling-ECU

DIAGNOSIS PROCEDURE

STEP 1. M.U.T.-III CAN bus diagnostics
Use the M.U.T.-III to diagnose the CAN bus lines.

Q: Is the check result normal?
YES : Go to Step 2.
NO : Repair the CAN bus line (Refer to GROUP 54C – Troubleshooting).

STEP 2. M.U.T.-III other system diagnosis code
Check again if the diagnosis code is set to the ETACS-ECU.

Q: Is the diagnosis code set?
YES : Troubleshoot the ETACS-ECU. (Refer to GROUP 54A – ETACS-ECU – Troubleshooting .)
NO : Go to Step 3.

STEP 3. Check the M.U.T.-III Diagnosis code for other systems
Check if the diagnosis code No. U0141 is set to engine-ECU.

Q: Is the diagnosis code set?
YES : Go to Step 4.
NO : Go to Step 5.

STEP 4. Diagnosis code recheck
Check again if the diagnosis code is set to the headlamp automatic levelling-ECU.
(1) Erase the diagnosis code.
(2) Turn the ignition switch from the LOCK (OFF) position to the ON position.
(3) Check if the diagnosis code is set.

Q: Is the diagnosis code set?
YES : Replace the ETACS-ECU.
NO : A poor connection, open circuit, or other intermittent malfunction in the CAN bus line between the headlamp automatic levelling-ECU and the ETACS-ECU. (Refer to GROUP 00 – How to Use Troubleshooting/ Inspection Service Points - How to Cope with Intermittent Malfunction .)

STEP 5. Diagnosis code recheck
Check again if the diagnosis code is set to the headlamp automatic levelling-ECU.
(1) Erase the diagnosis code.
(2) Turn the ignition switch from the LOCK (OFF) position to the ON position.
(3) Check if the diagnosis code is set.

Q: Is the diagnosis code set?
YES : Replace the headlamp automatic levelling-ECU.
NO : A poor connection, open circuit, or other intermittent malfunction in the CAN bus line between the headlamp automatic levelling-ECU and the ETACS-ECU. (Refer to GROUP 00 – How to Use Troubleshooting/ Inspection Service Points - How to Cope with Intermittent Malfunction .)

www.cargeek.ir

www.CarGeek.ir

Code No. U1415 Coding not completed/failed

⚠ CAUTION
- **If there is any problem in the CAN bus lines, an incorrect diagnosis code may be set. Prior to this diagnosis, always diagnose the CAN bus lines.**
- **Before replacing the ECU, ensure that the power supply circuit, the earth circuit and the communication circuit are normal.**

DIAGNOSTIC FUNCTION
When the variant coding for ETACS-ECU has not been implemented, AFS or headlamp automatic levelling system warnings are displayed on the multi information display and code No. U1415 is stored.

JUDGEMENT CRITERIA
The ETACS-ECU variant coding is not completed.

PROBABLE CAUSES
- Variant coding for ETACS-ECU has not been implemented.
- Malfunction of the ETACS-ECU
- Malfunction of the headlamp automatic levelling-ECU

DIAGNOSIS PROCEDURE

STEP 1. M.U.T.-III CAN bus diagnostics
Use the M.U.T.-III to diagnose the CAN bus lines.

Q: Is the check result normal?
YES : Go to Step 2.
NO : Repair the CAN bus line (Refer to GROUP 54C – Troubleshooting).

STEP 2. M.U.T.-III other system diagnosis code
Check if the diagnosis code relating to the coding error is set to the ETACS-ECU.

Q: Is the diagnosis code set?
YES : Troubleshoot the ETACS (Refer to).
NO : Go to Step 3.

STEP 3. Check whether the diagnosis code is reset.
Check again if the diagnosis code is set to headlamp automatic levelling-ECU.
(1) Erase the diagnosis code.
(2) Turn the ignition switch from "LOCK" (OFF) position to "ON" position.
(3) Check if diagnosis code is set.

Q: Is the diagnosis code set?
YES : Replace the headlamp automatic levelling-ECU.
NO : The trouble can be an intermittent malfunction (Refer to GROUP 00 – How to use Troubleshooting/inspection Service Points – How to Cope with Intermittent Malfunction).

Code No. U1417 Abnormality in coding data

⚠ CAUTION
- **If there is any problem in the CAN bus lines, an incorrect diagnosis code may be set. Prior to this diagnosis, always diagnose the CAN bus lines.**
- **Before replacing the ECU, ensure that the power supply circuit, the earth circuit and the communication circuit are normal.**

DIAGNOSTIC FUNCTION
Headlamp automatic levelling-ECU communicates with ETACS-ECU via CAN bus lines. When the vehicle information received from ETACS-ECU is invalid, AFS or headlamp automatic levelling system warnings are displayed on the multi information display and code No. U1417 is stored.

JUDGEMENT CRITERIA
The vehicle information received from ETACS-ECU at coding is not valid.

PROBABLE CAUSES
- Coding information input mistake
- ETACS-ECU failure or improper assembly
- Malfunction of the headlamp automatic levelling-ECU

DIAGNOSIS PROCEDURE

STEP 1. M.U.T.-III CAN bus diagnostics
Use the M.U.T.-III to diagnose the CAN bus lines.

Q: Is the check result normal?

www.cargeek.ir

www.CarGeek.ir

YES : Go to Step 2.
NO : Repair the CAN bus line (Refer to GROUP 54C – Troubleshooting).

STEP 2. M.U.T.-III other system diagnosis code
Check if the diagnosis code relating to the coding error is set to the ETACS-ECU.

Q: Is the diagnosis code set?
YES : Troubleshoot the ETACS (Refer to).
NO : Go to Step 3.

STEP 3. Check whether the diagnosis code is reset.
Check again if the diagnosis code is set to headlamp automatic levelling-ECU.
(1) Erase the diagnosis code.
(2) Turn the ignition switch from "LOCK" (OFF) position to "ON" position.
(3) Check if diagnosis code is set.

Q: Is the diagnosis code set?
YES : Replace the headlamp automatic levelling-ECU.
NO : The trouble can be an intermittent malfunction (Refer to GROUP 00 – How to use Troubleshooting/inspection Service Points – How to Cope with Intermittent Malfunction).

TROUBLE SYMPTOM CHART

M1540102101082

Trouble symptom		Inspection Procedure No.	Reference page
Headlamp and tail lamp	None of the low-beam headlamps illuminate.	1	
	None of the high-beam headlamps illuminate.	2	
	The headlamps (low-beam) illuminate regardless of the lighting switch positions. (High-beam does not illuminate)	3	
	The headlamps do not illuminate when the passing switch is turned ON.	4	
	One of the headlamp(s) does not illuminate.	5	
	The high-beam indicator lamp does not illuminate.	6	
	The headlamp automatic shutdown function does not work normally.	7	
	The auto lamp function does not work normally.	8	
	One of the position lamps, the licence plate lamps or the tail lamps does not illuminate.	9	
Turn-signal lamp	None of the turn-signal lamps illuminate.	10	
	The comfort flashing function does not work normally.	11	
	The turn-signal indicator lamps do not illuminate.	12	
AFS	One of the bending lamps does not illuminate.	13	
	The bending lamp illumination timing by the steering operation is failed.	14	
The welcome light function does not work normally.		15	
The coming home light function does not work normally.		16	

www.cargeek.ir

www.CarGeek.ir

SYMPTOM PROCEDURES

Inspection Procedure 1: None of the low-beam headlamps illuminate.

⚠ CAUTION

Whenever the ECU is replaced, ensure that the power supply circuit, the earth circuit and the communication circuit are normal.

Headlamp Relay (Low-Beam) Circuit

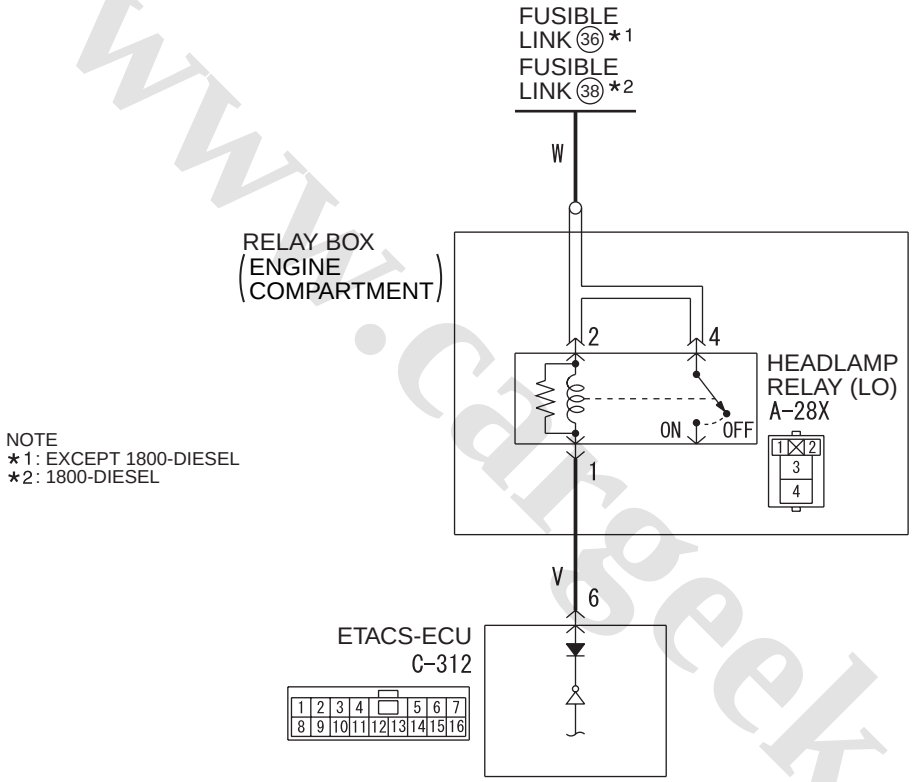

Wire colour code
B : Black LG : Light green G : Green L : Blue W : White Y : Yellow SB : Sky blue
BR : Brown O : Orange GR : Grey R : Red P : Pink V : Violet PU : Purple SI : Silver WBH54E061A

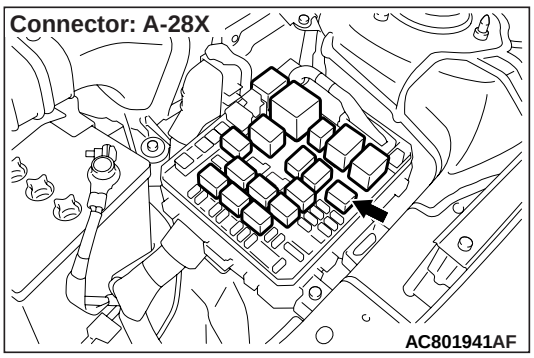

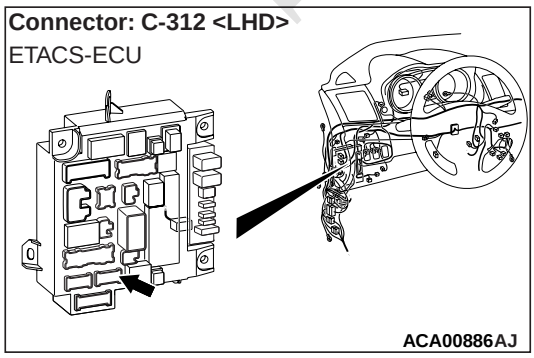

www.cargeek.ir

www.CarGeek.ir

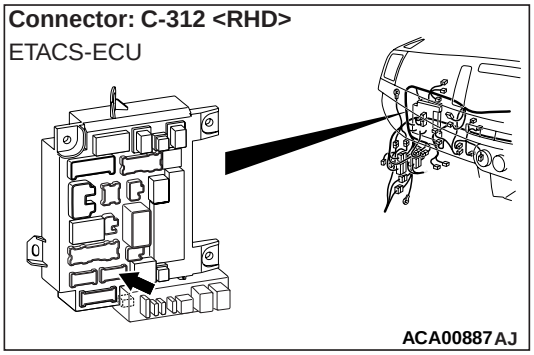

COMMENTS ON TROUBLE SYMPTOM
If both headlamps (low-beam) do not illuminate normally, the headlamp switch input circuit, headlamp relay (LO), or ETACS-ECU may have a problem.

PROBABLE CAUSES
- Malfunction of column switch
- Malfunction of headlamp relay (LO)
- Malfunction of the ETACS-ECU
- Damaged harness wires and connectors

DIAGNOSIS PROCEDURE

STEP 1. M.U.T.-III diagnosis code
Check if diagnosis code is set to the ETACS-ECU.

Q: Is the diagnosis code set?
YES : Troubleshoot the ETACS-ECU. Refer to .
NO : Go to Step 2.

STEP 2. M.U.T.-III data list
Use the ETACS-ECU service data to check the signal related to the operation of headlamp function.
- Headlamp switch to ON.

Item No.	Item name	Normal condition
Item 341	Head lamp switch	ON

OK: Normal condition is displayed.

Q: Is the check result normal?
YES : Go to Step 3.
NO : Troubleshoot the ETACS-ECU. Refer to Inspection Procedure 11 "The column switch signal is not received" .

STEP 3. Connector check: A-28X Headlamp relay (LO) connector

Q: Is the check result normal?
YES : Go to Step 4.
NO : Repair the defective connector.

STEP 4. Headlamp relay (LO) check
Refer to .

Q: Is the check result normal?
YES : Go to Step 5.
NO : Replace the headlamp relay (LO).

STEP 5. Voltage measurement at the A-28X headlamp relay (LO) connector
(1) Remove the headlamp relay (LO), and measure at the relay box side.
(2) Measure the voltage between headlamp relay (LO) connector terminal No. 2/4 and the body earth.

OK: System voltage

Q: Is the check result normal?
YES : Go to Step 6.
NO : Go to Step 8.

STEP 6. Connector check: C-312 ETACS-ECU connector

Q: Is the check result normal?
YES : Go to Step 7.
NO : Repair the defective connector.

STEP 7. Wiring harness check between the A-28X headlamp relay (LO) connector terminal No. 1 and the C-312 ETACS-ECU connector terminal No. 6
- Check the output lines for open circuit or short circuit.

Q: Is the check result normal?
YES : Go to Step 9.
NO : Repair the wiring harness.

STEP 8. Wiring harness check between the A-28X headlamp relay (LO) connector terminal No. 2/4 and the fusible link (36) <Except 1800-DIESEL> or (38) <1800-DIESEL>
- Check the output lines for open circuit or short circuit.

Q: Is the check result normal?
YES : Go to Step 9.
NO : Repair the wiring harness.

STEP 9. Retest the system
Check that the headlamps (low-beam) illuminate normally.

Q: Is the check result normal?

www.cargeek.ir

www.CarGeek.ir

YES : The trouble can be an intermittent malfunction (Refer to GROUP 00 – How to use Troubleshooting/inspection Service Points – How to Cope with Intermittent Malfunction).

NO : Replace the ETACS-ECU.

Inspection Procedure 2: None of the high-beam headlamps illuminate.

⚠ CAUTION

Whenever the ECU is replaced, ensure that the power source circuit, the earth circuit and the communication circuit are normal.

Headlamp Relay (High-Beam) Circuit

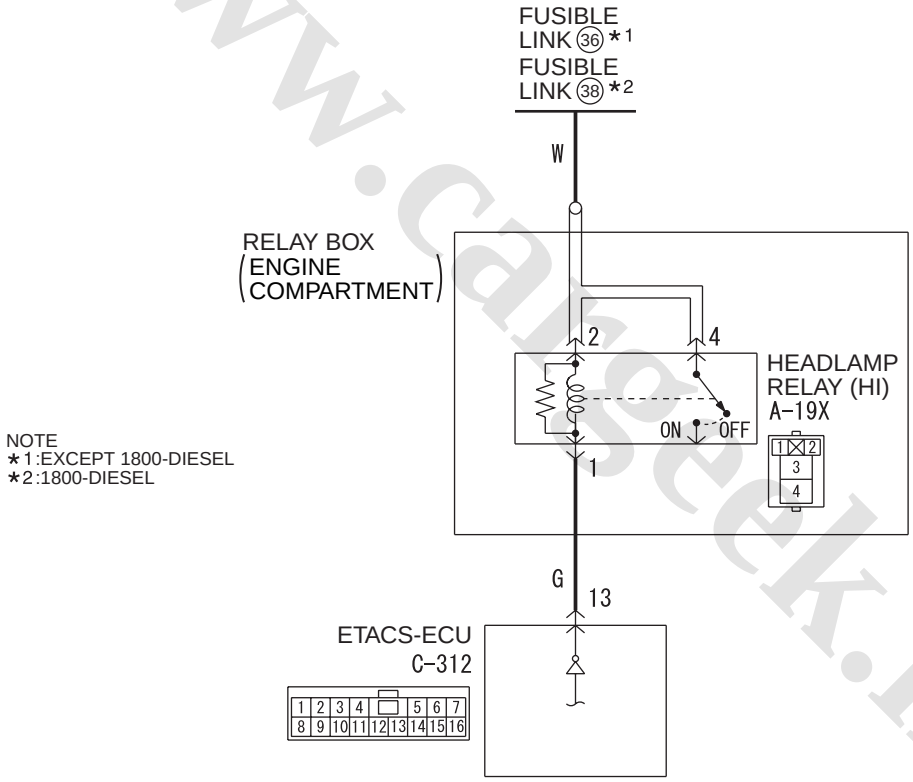

Wire colour code
B : Black LG : Light green G : Green L : Blue W : White Y : Yellow SB : Sky blue
BR : Brown O : Orange GR : Grey R : Red P : Pink V : Violet PU : Purple SI : Silver WBH54E062A

www.cargeek.ir

www.CarGeek.ir

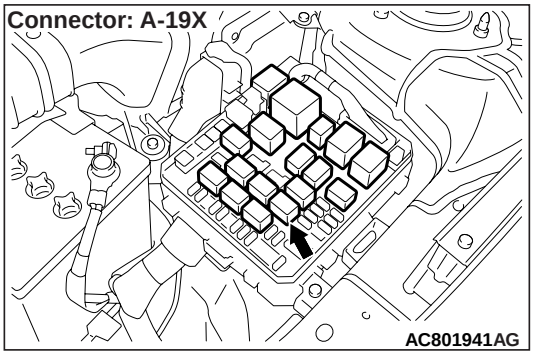

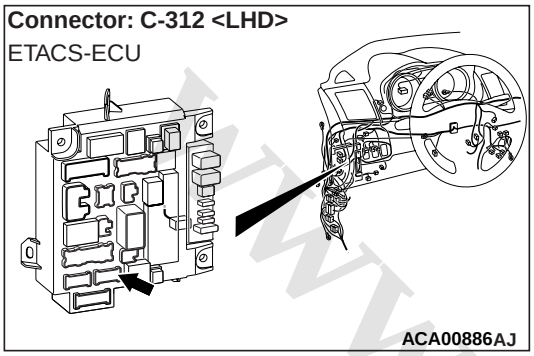

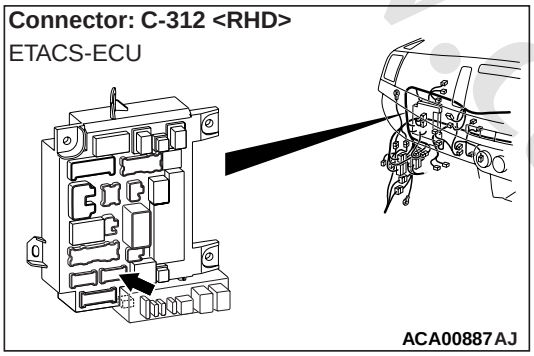

COMMENTS ON TROUBLE SYMPTOM

If both headlamps (high-beam) do not illuminate normally, the headlamp switch input circuit, headlamp relay (HI), or ETACS-ECU may have a problem.

PROBABLE CAUSES

- Malfunction of column switch
- Malfunction of headlamp relay (HI)
- Malfunction of the ETACS-ECU
- Damaged harness wires and connectors

DIAGNOSIS PROCEDURE

STEP 1. M.U.T.-III diagnosis code

Check if diagnosis code is set to the ETACS-ECU.

Q: Is the diagnosis code set?

YES : Troubleshoot the ETACS-ECU. Refer to .
NO : Go to Step 2.

STEP 2. M.U.T.-III data list

Use the ETACS-ECU service data to check the signal related to the operation of headlamp function.

- Headlamp switch to ON.

Item No.	Item name	Normal condition
Item 341	Head lamp switch	ON

OK: Normal condition is displayed.

Q: Is the check result normal?

YES : Go to Step 3.
NO : Troubleshoot the ETACS-ECU. Refer to Inspection Procedure 11 "The column switch signal is not received" .

STEP 3. Connector check: A-19X headlamp relay (HI) connector

Q: Is the check result normal?

YES : Go to Step 4.
NO : Repair the defective connector.

STEP 4. Headlamp relay (HI) check

Refer to .

Q: Is the check result normal?

YES : Go to Step 5.
NO : Replace the headlamp relay (HI).

STEP 5. Voltage measurement at the A-19X headlamp relay (HI) connector

(1) Remove the headlamp relay (HI), and measure at the relay box side.
(2) Measure the voltage between headlamp relay (HI) connector terminal No. 2/4 and the body earth.

OK: System voltage

Q: Is the check result normal?

YES : Go to Step 6.
NO : Go to Step 8.

STEP 6. Connector check: C-312 ETACS-ECU connector

Q: Is the check result normal?

YES : Go to Step 7.
NO : Repair the defective connector.

www.cargeek.ir

www.CarGeek.ir

STEP 7. Wiring harness check between the A-19X headlamp relay (HI) connector terminal No. 1 and the C-312 ETACS-ECU connector terminal No. 13

- Check the output lines for open circuit or short circuit.

Q: Is the check result normal?
YES : Go to Step 9.
NO : Repair the wiring harness.

STEP 8. Wiring harness check between the A-19X headlamp relay (HI) connector terminal No. 2/4 and the fusible link (36) <Except 1800-DIESEL> or (38) <1800-DIESEL>

- Check the power source line for open circuit or short circuit.

Q: Is the check result normal?
YES : Go to Step 9.
NO : Repair the wiring harness.

STEP 9. Retest the system
Check that the headlamps (high-beam) illuminate normally.

Q: Is the check result normal?
YES : The trouble can be an intermittent malfunction (Refer to GROUP 00 – How to use Troubleshooting/inspection Service Points – How to Cope with Intermittent Malfunction).
NO : Replace the ETACS-ECU.

Inspection Procedure 3: The headlamps (low-beam) illuminate regardless of the lighting switch positions. (High-beam does not illuminate)

⚠ CAUTION
Whenever the ECU is replaced, ensure that the power supply circuit, the earth circuit and the communication circuit are normal.

COMMENTS ON TROUBLE SYMPTOM
If the headlamps illuminate only at low-beam regardless of the lighting switch position, the headlamp fail-safe function may be active.

PROBABLE CAUSES
- Malfunction of column switch
- Malfunction of the lighting control sensor <Vehicles with auto lamp function>
- Malfunction of the ETACS-ECU
- Damaged harness wires and connectors

DIAGNOSIS PROCEDURE

STEP 1. M.U.T.-III diagnosis code
Check if diagnosis code is set to the ETACS-ECU.

Q: Is the diagnosis code set?
YES : Troubleshoot the ETACS-ECU. Refer to .
NO : Go to Step 2.

STEP 2. M.U.T.-III other system diagnosis code
Check if diagnosis code is set to the LIN.

Q: Is the diagnosis code set?
YES : Refer to diagnosis code chart .
NO : Go to Step 3.

STEP 3. M.U.T.-III data list
Use the ETACS-ECU service data to check the signals related to the operation of auto lamp function.

- Headlamp switch to ON.

Item No.	Item name	Normal condition
Item 341	Head lamp switch	ON

- Turn the lighting switch to the "AUTO" position <Vehicles with auto lamp function>.

Item No.	Item name	Normal condition
Item 348	Head lamp switch (auto)	ON

OK: Normal condition is displayed.

Q: Is the check result normal?
YES <Vehicles without auto lamp function> : Go to Step 5.
YES <Vehicles with auto lamp function> : Go to Step 4.
NO : Troubleshoot the ETACS-ECU. Refer to Inspection Procedure 11 "The column switch signal is not received" .

STEP 4. Check that the auto lamp function.
Check that the auto lamp function normally (Refer to).

Q: Is the check result normal?

www.cargeek.ir

www.CarGeek.ir

YES : Go to Step 5.
NO : Refer to Inspection Procedure 8 "The auto lamp function does not work normally." .

STEP 5. Retest the system
Check that the headlamps illuminate normally.

Q: Is the check result normal?

YES : The trouble can be an intermittent malfunction (Refer to GROUP 00 – How to use Troubleshooting/inspection Service Points – How to Cope with Intermittent Malfunction).
NO : Replace the ETACS-ECU.

Inspection Procedure 4: The headlamps do not illuminate when the passing switch is turned ON.

⚠ **CAUTION**
Whenever the ECU is replaced, ensure that the power supply circuit, the earth circuit and the communication circuit are normal.

COMMENTS ON TROUBLE SYMPTOM
If both headlamps (low-beam and high-beam) do not illuminate, the passing switch input circuit or ETACS-ECU may have a problem.

PROBABLE CAUSES
- Malfunction of column switch
- Malfunction of the ETACS-ECU
- Damaged harness wires and connectors

DIAGNOSIS PROCEDURE

STEP 1. Check the operation of the headlamps.
Check that the low-beam and high-beam headlamps illuminate normally.

Q: Is the check result normal?

YES : Go to Step 2.
NO : Refer to Inspection Procedure 1 "None of the low-beam headlamps illuminate." and Inspection Procedure 2 "None of the high-beam headlamps illuminate." .

STEP 2. M.U.T.-III diagnosis code
Check if diagnosis code is set to the ETACS-ECU.

Q: Is the diagnosis code set?
YES : Troubleshoot the ETACS-ECU. Refer to .
NO : Go to Step 3.

STEP 3. Retest the system
Check that the headlamps (low-beam and high-beam) illuminates normally when turning ON the passing switch.

Q: Is the check result normal?
YES : The trouble can be an intermittent malfunction (Refer to GROUP 00 – How to use Troubleshooting/inspection Service Points – How to Cope with Intermittent Malfunction).
NO : Replace the ETACS-ECU.

www.cargeek.ir

www.CarGeek.ir

Inspection Procedure 5: One of the headlamp(s) does not illuminate.

⚠ CAUTION

If the discharge type headlamps do not illuminate, fully understand the precautions in "Service precautions for discharge headlamp" before proceeding with the troubleshooting. Refer to .

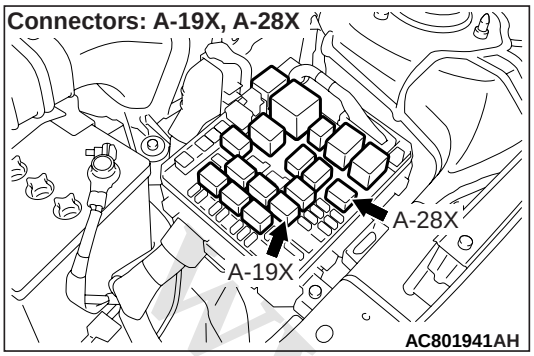

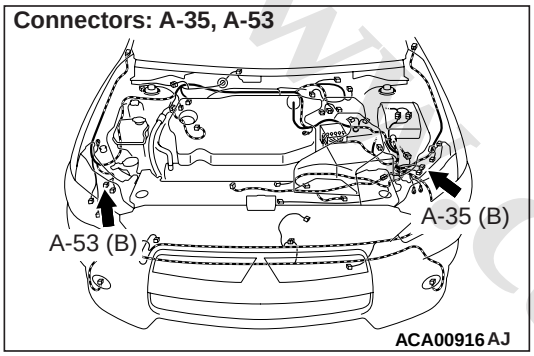

COMMENTS ON TROUBLE SYMPTOM

When one of the headlamps does not illuminate, the wiring harness, connector(s), or the bulb may have a problem, or the fuse may be burned out.

PROBABLE CAUSES

- Malfunction of the headlamp bulbs
- Malfunction of the headlamp assembly
- Damaged harness wires and connectors

DIAGNOSIS PROCEDURE

STEP 1. Connector check: A-35 (LH) and A-53 (RH) headlamp assembly connector

Q: Is the check result normal?

YES : Go to Step 2.

NO : Repair the defective connector.

STEP 2. Bulb check

Check the bulb(s) of headlamp that does not illuminate.

NOTE: If discharge-type low-beam headlamps do not illuminate, their bulbs cannot be inspected. In this case, assume the bulbs to be normal and proceed with steps.

Q: Is the check result normal?

YES : Go to Step 3.

NO : Replace the bulb(s) of the lamp that does not illuminate.

STEP 3. Resistance measurement at the A-35 (LH) and A-53 (RH) headlamp assembly connector

(1) Disconnect the connector, and measure at the wiring harness side.

(2) Measure the resistance between the connector of lamp which does not illuminate and the body earth.

- Measure the resistance between the A-35 (LH), A-53 (RH) headlamp assembly connector terminal No. 6 <Vehicles without discharge headlamp> or terminal No. 5 <Vehicles with discharge headlamp> and the body earth.

OK: Continuity exists (2 Ω or less)

Q: Is the check result normal?

YES : Go to Step 5.

NO : Go to Step 4.

STEP 4. Wiring harnesses check between the A-35 (LH) and A-53 (RH) headlamp assembly connector terminal No. 6 <Vehicles without discharge headlamp> or terminal No. 5 <Vehicles with discharge headlamp> and the body earth

- Check the earth wires for open circuit.

Q: Is the check result normal?

YES : The trouble can be an intermittent malfunction (Refer to GROUP 00 – How to use Troubleshooting/inspection Service Points – How to Cope with Intermittent Malfunction).

NO : Repair the wiring harness.

STEP 5. Wiring harnesses check between A-35 (LH) and A-53 (RH) headlamp assembly connector terminal No. 2 <Vehicles without discharge headlamp LO> / terminal No. 12 <Vehicles with discharge headlamp LO>, or terminal No. 1 <HI> and the A-28X <LO> or A-19X <HI> headlamp relay connector terminal No. 3

- Check the power supply line for open circuit.

Q: Is the check result normal?

www.cargeek.ir

www.CarGeek.ir

YES : Replace the headlamp assembly that does not illuminate.
NO : Repair the wiring harness.

Inspection Procedure 6: The high-beam indicator lamp does not illuminate.

⚠ CAUTION
Whenever the ECU is replaced, ensure that the power supply circuit, the earth circuit and the communication circuit are normal.

High-Beam Indicator Lamp Circuit

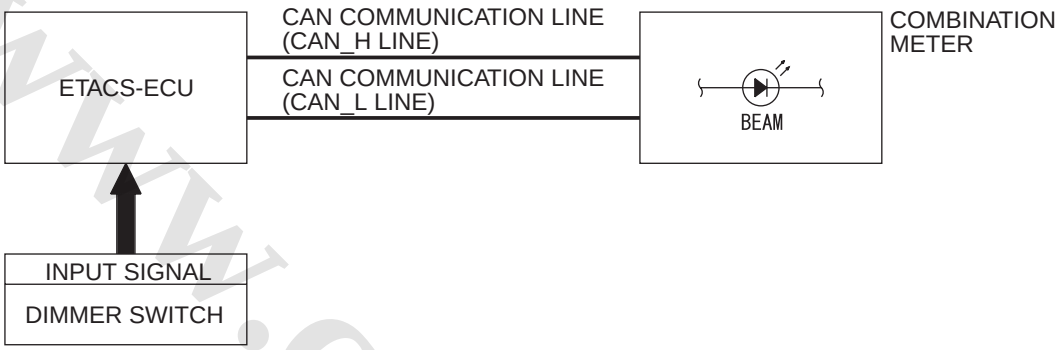

W4X54E031A

COMMENTS ON TROUBLE SYMPTOM
If the high-beam indicator does not illuminate normally, the harness in the CAN bus lines, connector(s), ETACS-ECU, or combination meter may have a problem.

PROBABLE CAUSES
- Malfunction of the ETACS-ECU
- Malfunction of combination meter
- Damaged harness wires and connectors

DIAGNOSIS PROCEDURE

STEP 1. Headlamp (high-beam) check
Check that the headlamps (high-beam) illuminate/extinguish normally when the lighting switch is operated.

Q: Is the check result normal?
YES : Go to Step 2.
NO : Refer to Inspection Procedure 2 "None of the high-beam headlamps illuminate." .

STEP 2. M.U.T.-III CAN bus diagnostics
Use the M.U.T.-III to diagnose the CAN bus lines.

Q: Is the check result normal?
YES : Go to Step 3.
NO : Repair the CAN bus line (Refer to GROUP 54C – Troubleshooting).

STEP 3. M.U.T.-III diagnosis code
Check if diagnosis code is set to the ETACS-ECU.

Q: Is the diagnosis code set?
YES : Troubleshoot the ETACS-ECU. Refer to .
NO : Go to Step 4.

STEP 4. M.U.T.-III other system actuator test
Perform the actuator test for the combination meter, and check that the high beam indicator illuminates (Refer to Combination Meter).

Q: Is the check result normal?
YES : Replace the ETACS-ECU.
NO : Replace the combination meter.

www.cargeek.ir

Inspection Procedure 7: The headlamp automatic shutdown function does not work normally.

⚠ CAUTION

Whenever the ECU is replaced, ensure that the power supply circuit, the earth circuit and the communication circuit are normal.

OPERATION

The ETACS-ECU operates this function in accordance with the input signals from column switch (lighting switch), ignition switch (IG1), and driver's door switch.

COMMENTS ON TROUBLE SYMPTOM

If the headlamp automatic shutdown function does not work normally, the above described input circuits or ETACS-ECU may have a problem. Also, it may be possible that the headlamp automatic shutdown function is set to "Disable" through customisation.

PROBABLE CAUSES

- Malfunction of driver's door switch
- Malfunction of the ETACS-ECU
- Damaged harness wires and connectors

DIAGNOSIS PROCEDURE

STEP 1. Customise function check

Use the ETACS-ECU customise function to check that the "Head lamp auto cut customize" is set to "B-spec."

Q: Is the check result normal?

YES : Go to Step 2.

NO : Use the ETACS-ECU customise function to set the "Head lamp auto cut customize" to "B-spec." (Refer to).

STEP 2. M.U.T.-III diagnosis code

Check if diagnosis code is set to the ETACS-ECU.

Q: Is the diagnosis code set?

YES : Troubleshoot the ETACS-ECU. Refer to .

NO : Go to Step 3.

YES : The trouble can be an intermittent malfunction (Refer to GROUP 00 – How to use Troubleshooting/inspection Service Points – How to Cope with Intermittent Malfunction).

STEP 3. M.U.T.-III data list

Use the ETACS-ECU service data to check the signals related to the operation of headlamp automatic shutdown function.

- Turn the ignition switch to the LOCK (OFF) position.
- Turn the lighting switch to the "TAIL" position.

Item No.	Item name	Normal condition
Item 254	IG voltage	1 V or less
Item 340	Head lamp switch (tail)	ON

- Turn the lighting switch to the "HEAD" position.

Item No.	Item name	Normal condition
Item 341	Head lamp switch	ON

- Open the driver's door.

Item No.	Item name	Normal condition
Item 256	Dr door ajar switch	Open

OK: Normal conditions are displayed for all the items.

Q: Is the check result normal?

Normal conditions are displayed for all the items. : Go to Step 4.

Normal condition is not displayed for item No. 254. : Troubleshoot the ETACS-ECU. Refer to Inspection Procedure 2 "The ignition switch (IG1) signal is not received" .

Normal condition is not displayed for item No. 340 or 341. : Troubleshoot the ETACS-ECU. Refer to Inspection Procedure 11 "The column switch signal is not received" .

Normal condition is not displayed for item No. 256. : Troubleshoot the ETACS-ECU. Refer to Inspection Procedure 5 "The front door switch (driver's side) signal is not received" .

STEP 4. Retest the system

Check that the headlamp automatic shutdown function works normally.

Q: Is the check result normal?

NO : Replace the ETACS-ECU.

www.cargeek.ir

www.CarGeek.ir

Inspection Procedure 8: The auto lamp function does not work normally.

⚠ CAUTION

Whenever the ECU is replaced, ensure that the power supply circuit, the earth circuit and the communication circuit are normal.

OPERATION

The ETACS-ECU operates this function in accordance with the input signals from driving distance, lighting control sensor, and column switch (auto lamp switch). Also, when the column switch (lighting switch) is in the "AUTO" position, and when an abnormality is present to the auto lamp circuit, the fail-safe function is activated and the low beam is turned ON at all times regardless of the brightness around the vehicle.

COMMENTS ON TROUBLE SYMPTOM

If the auto lamp function does not work normally, the above input signal circuit(s) or the ETACS-ECU may have a problem.

PROBABLE CAUSES

- Malfunction of the lighting control sensor
- Malfunction of the column switch
- Malfunction of the ETACS-ECU
- Damaged harness wires and connectors

DIAGNOSIS PROCEDURE

STEP 1. M.U.T.-III CAN bus diagnostics

Use the M.U.T.-III to diagnose the CAN bus lines.

Q: Is the check result normal?

YES : Go to Step 2.

NO : Repair the CAN bus line (Refer to GROUP 54C – Troubleshooting).

STEP 2. M.U.T.-III diagnosis code

Check if diagnosis code is set to the LIN.

Q: Is the diagnosis code set?

YES : Refer to diagnosis code chart .

NO : Go to Step 3.

STEP 3. M.U.T.-III other system diagnosis code

Check if diagnosis code is set to the ETACS-ECU.

Q: Is the diagnosis code set?

YES : Troubleshoot the ETACS-ECU (Refer to).

NO : Go to Step 4.

STEP 4. Check that the headlamps operate.

Check that the headlamps (low-beam) illuminate normally.

Q: Is the check result normal?

YES : Go to Step 5.

NO : Refer to Inspection Procedure 1 "None of the low-beam headlamps illuminate." .

STEP 5. M.U.T.-III data list

Use the ETACS-ECU service data to check the signals related to the operation of auto lamp function.

- Turn the lighting switch to the "AUTO" position.

Item No.	Item name	Normal condition
Item 348	Headlamp switch (auto)	ON

OK: Normal condition is displayed.

Q: Is the check result normal?

YES : Go to Step 6.

NO : Troubleshoot the ETACS-ECU. Refer to Inspection Procedure 11 "The column switch signal is not received" .

STEP 6. Lighting control sensor check

Check the lighting control sensor. Refer to .

Q: Is the check result normal?

YES : Go to Step 7.

NO : Replace the lighting control sensor.

STEP 7. Retest the system

Check that the auto lamp function works normally.

Q: Is the check result normal?

YES : The trouble can be an intermittent malfunction (Refer to GROUP 00 – How to use Troubleshooting/inspection Service Points – How to Cope with Intermittent Malfunction).

NO : Replace the ETACS-ECU.

www.cargeek.ir

www.CarGeek.ir

Inspection Procedure 9: One of the position lamps, the licence plate lamps or the tail lamps does not illuminate.

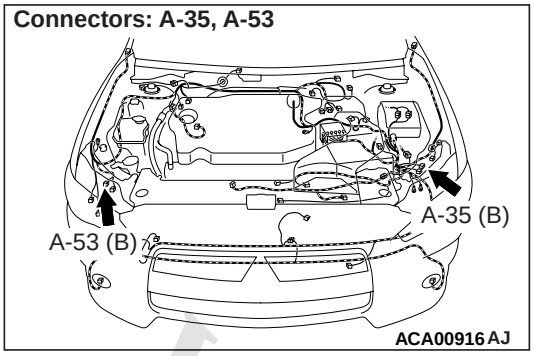

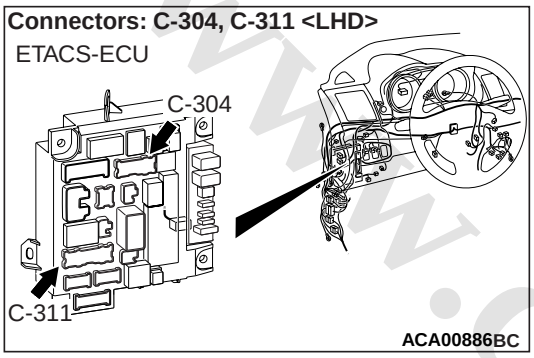

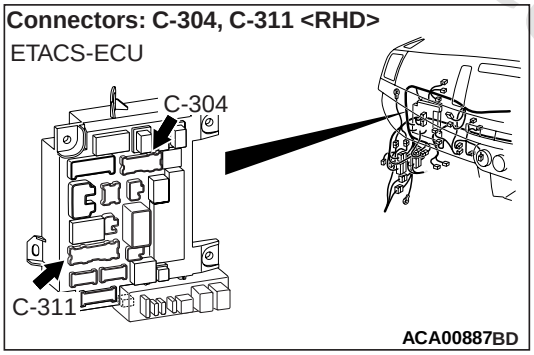

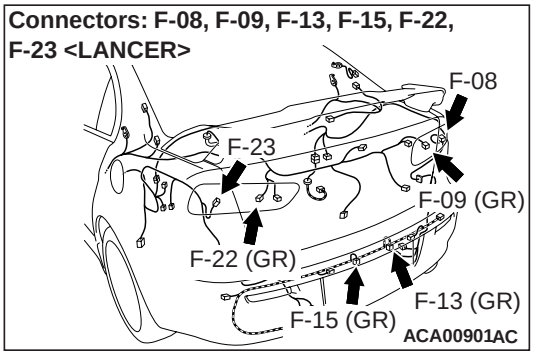

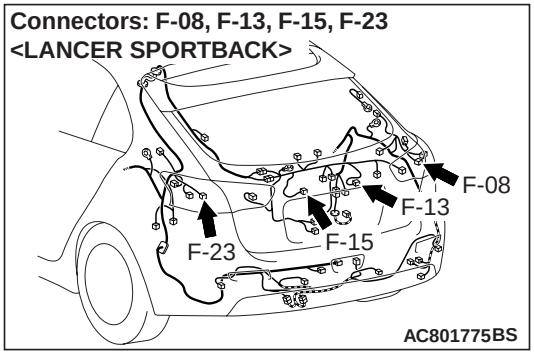

COMMENTS ON TROUBLE SYMPTOM

If one of the position lamps, the licence plate lamps or tail lamps does not illuminate normally, the harness, connector(s), or bulb(s) may have a problem, or the fuse may be burned out.

PROBABLE CAUSES

- Malfunction of bulbs
- Damaged harness wires and connectors

DIAGNOSIS PROCEDURE

STEP 1. Connector check: A-35 (position lamp LH) or A-53 (position lamp RH) headlamp assembly connector, F-23 (LH) or F-08 (RH) rear combination lamp connector, F-22 (LH) or F-09 (RH) tail lamp <LANCER> connector and F-15 (LH) or F-13 (RH) licence plate lamp connector

Q: Is the check result normal?

YES : Go to Step 2.
NO : Repair the defective connector.

STEP 2. Bulb check

Check the bulb(s) of the lamp that does not illuminate.

Q: Is the check result normal?

YES <LANCER> : Go to Step 3.
YES <LANCER SPORTBACK> : Go to Step 8.
NO : Replace the bulb(s) of the lamp that does not illuminate.

www.cargeek.ir

www.CarGeek.ir

STEP 3. Resistance measurement at the A-35 (position lamp LH) or A-53 (position lamp RH) headlamp assembly connector, F-23 (LH) or F-08 (RH) rear combination lamp connector, F-22 (LH) or F-09 (RH) tail lamp <LANCER> connector and F-15 (LH) or F-13 (RH) licence plate lamp connector

(1) Disconnect the connector, and measure at the wiring harness side.
(2) Measure the resistance between the connector of lamp which does not illuminate and the body earth.
- Measure the resistance between the A-35 (LH), A-53 (RH) headlamp assembly connector terminal No. 6 and the body earth. <Position lamp>
- Measure the resistance between the F-23 (LH) and F-08 (RH) rear combination lamp connector terminal No. 1 and the body earth.
- Measure the resistance between the F-22 (LH), F-09 (RH) tail lamp <LANCER> connector terminal No. 1 and the body earth.
- Measure the resistance between the F-15 (LH), F-13 (RH) licence plate lamp connector terminal No. 1 and the body earth.

OK: Continuity exists (2 Ω or less)

Q: Is the check result normal?
YES : Go to Step 5.
NO : Go to Step 4.

STEP 4. Wiring harness check between the A-35 (position lamp LH) or A-53 (position lamp RH) headlamp assembly connector terminal No. 6, F-23 (LH) or F-08 (RH) rear combination lamp connector terminal No. 1, F-22 (LH) or F-09 (RH) tail lamp <LANCER> connector terminal No. 1 or F-15 (LH) or F-13 (RH) licence plate lamp connector terminal No. 1 and the body earth

NOTE: Before the wiring harness check, check the intermittent connector F-28 or F-19, and repair that if necessary.
- Check the earth wires for open circuit.

Q: Is the check result normal?
YES : Go to Step 7.
NO : Repair the wiring harness.

STEP 5. Connector check: C-304 (position lamp), C-311 (tail lamp or licence plate lamp) ETACS-ECU connector

Q: Is the check result normal?
YES : Go to Step 6.
NO : Repair the defective connector.

STEP 6. Wiring harness check between the A-35 (position lamp LH) or A-53 (position lamp RH) headlamp assembly connector terminal No. 4 and C-304 ETACS-ECU connector terminal No. 3 (LH) or terminal No. 7 (RH) and between F-23 (LH) or F-08 (RH) rear combination lamp connector terminal No. 3, F-22 (LH) or F-09 (RH) tail lamp <LANCER> connector terminal No. 2 or F-15 (LH) or F-13 (RH) licence lamp connector terminal No. 2 and C-311 ETACS-ECU connector terminal No. 10 (tail lamp LH or licence plate lamp) or terminal No. 13 (tail lamp RH)

NOTE: Before the wiring harness check, check the intermittent connector D-12, D-16, F-19 and F-28, and repair that if necessary.
- Check the output lines for open circuit.

Q: Is the check result normal?
YES : Go to Step 7.
NO : Repair the wiring harness.

STEP 7. Retest the system

Check that the position lamp and licence plate lamp illuminate normally.

Q: Is the check result normal?
The lamps illuminate normally at both high and low beams. : The trouble can be an intermittent malfunction (Refer to GROUP 00 – How to use Troubleshooting/inspection Service Points – How to Cope with Intermittent Malfunction).
When the position lamps do not illuminate : Replace the position lamp socket.
When the tail lamps do not illuminate : Replace the rear combination lamp socket or the tail lamp socket.
When the licence plate lamps do not illuminate : Replace the licence plate lamp socket.

STEP 8. Resistance measurement at the A-35 (position lamp LH) or A-53 (position lamp RH) headlamp assembly connector, F-23 (LH) or F-08 (RH) rear combination lamp connector, and F-15 (LH) or F-13 (RH) licence plate lamp connector

(1) Disconnect the connector, and measure at the wiring harness side.
(2) Measure the resistance between the connector of lamp which does not illuminate and the body

www.cargeek.ir

www.CarGeek.ir

earth.
- Measure the resistance between the A-35 (LH), A-53 (RH) headlamp assembly connector terminal No. 6 and the body earth. <Position lamp>
- Measure the resistance between the F-23 (LH) and F-08 (RH) rear combination lamp connector terminal No. 3 and the body earth.
- Measure the resistance between the F-15 (LH), F-13 (RH) licence plate lamp connector terminal No. 1 and the body earth.

OK: Continuity exists (2 Ω or less)

Q: Is the check result normal?
YES : Go to Step 10.
NO : Go to Step 9.

STEP 9. Wiring harness check between the A-35 (position lamp LH) or A-53 (position lamp RH) headlamp assembly connector terminal No. 6, F-23 (LH) or F-08 (RH) rear combination lamp connector terminal No. 3 or F-15 (LH) or F-13 (RH) licence plate lamp connector terminal No. 1 and the body earth
- Check the earth wires for open circuit.

Q: Is the check result normal?
YES : Go to Step 12.
NO : Repair the wiring harness.

STEP 10. Connector check: C-304 (position lamp), C-311 (tail lamp or licence plate lamp) ETACS-ECU connector

Q: Is the check result normal?
YES : Go to Step 11.
NO : Repair the defective connector.

STEP 11. Wiring harness check between the A-35 (position lamp LH) or A-53 (position lamp RH) headlamp assembly connector terminal No. 4 and C-304 ETACS-ECU connector terminal No. 3 (LH) or terminal No. 7 (RH), F-23 (LH) or F-08 (RH) rear combination lamp connector terminal No. 2 or F-15 (LH) or F-13 (RH) licence plate lamp connector terminal No. 2 and C-311 ETACS-ECU connector terminal No. 10 (tail lamp LH or licence plate lamp) or terminal No. 13 (tail lamp RH)

NOTE: Before the wiring harness check, check the intermittent connector D-12, D-16 and F-39, and repair that if necessary.
- Check the output lines for open circuit.

Q: Is the check result normal?
YES : Go to Step 12.
NO : Repair the wiring harness.

STEP 12. Retest the system
Check that the position lamp and licence plate lamp illuminate normally.

Q: Is the check result normal?
The lamps illuminate normally at both high and low beams. : The trouble can be an intermittent malfunction (Refer to GROUP 00 – How to use Troubleshooting/inspection Service Points – How to Cope with Intermittent Malfunction).
When the position lamps do not illuminate : Replace the position lamp socket.
When the tail lamps do not illuminate : Replace the rear combination lamp socket or the tail lamp socket.
When the licence plate lamps do not illuminate : Replace the licence plate lamp socket.

Inspection Procedure 10: None of the turn-signal lamps illuminate.

⚠ CAUTION
Whenever the ECU is replaced, ensure that the power supply circuit, the earth circuit and the communication circuit are normal.

COMMENTS ON TROUBLE SYMPTOM
If all the turn-signal lamps do not illuminate, the ignition switch (IG1), the turn-signal lamp switch input circuit or the ETACS-ECU may have a problem.

PROBABLE CAUSES
- Malfunction of column switch
- Malfunction of the ETACS-ECU
- Damaged harness wires and connectors

DIAGNOSIS PROCEDURE

STEP 1. M.U.T.-III diagnosis code
Check if diagnosis code is set to the ETACS-ECU.

Q: Is the diagnosis code set?
YES : Troubleshoot the ETACS-ECU. Refer to .
NO : Go to Step 2.

www.cargeek.ir

www.CarGeek.ir

STEP 2. M.U.T.-III data list
Using the ETACS-ECU service data, check the signals related to the illumination of turn-signal lamp.
- Turn the ignition switch to the ON position.
- Turn the turn-signal lamp switch to the left position.

Item No.	Item name	Normal condition
Item 254	IG voltage	System voltage
Item 343	Turn switch left	ON

- Turn the turn-signal lamp switch to the right position.

Item No.	Item name	Normal condition
Item 344	Turn switch right	ON

OK: Normal conditions are displayed for all the items.

Q: Is the check result normal?

Normal conditions are displayed for all the items. : Go to Step 3.

Normal condition is not displayed for item No. 254. : Troubleshoot the ETACS-ECU. Refer to Inspection Procedure 2 "The ignition switch (IG1) signal is not received" .

Normal condition is not displayed for item No. 343 or 344. : Troubleshoot the ETACS-ECU. Refer to Inspection Procedure 11 "The column switch signal is not received" .

STEP 3. Retest the system
Check that the turn-signal lamps illuminate.

Q: Is the check result normal?
YES : The trouble can be an intermittent malfunction (Refer to GROUP 00 – How to use Troubleshooting/inspection Service Points – How to Cope with Intermittent Malfunction).
NO : Replace the ETACS-ECU.

Inspection Procedure 11: The comfort flashing function does not work normally.

⚠ CAUTION
Whenever the ECU is replaced, ensure that the power supply circuit, the earth circuit and the communication circuit are normal.

COMMENTS ON TROUBLE SYMPTOM
If the comfort flashing function does not work normally, the turn-signal lamp switch input circuit(s) and ETACS-ECU may have a problem.

PROBABLE CAUSES
- Malfunction of column switch
- Malfunction of the ETACS-ECU
- Damaged harness wires and connectors

DIAGNOSIS PROCEDURE

STEP 1. ETACS-ECU customise function check
Use the ETACS-ECU customise function to check that the "Comfort flasher" is set to "Enable."

Q: Is the check result normal?
YES : Go to Step 2.
NO : Use the ETACS-ECU customise function to set the "Comfort flasher" to "Enable" (Refer to).

STEP 2. M.U.T.-III diagnosis code
Check if diagnosis code is set to the ETACS-ECU.

Q: Is the diagnosis code set?
YES : Troubleshoot the ETACS-ECU. Refer to .
NO : Go to Step 3.

STEP 3. Check that the turn-signal lamps operate.
Check that the turn-signal lamps work normally when the ignition switch is in the ON position.

Q: Is the check result normal?
YES : Go to Step 4.
NO : Refer to Inspection Procedure 10 "None of the turn-signal lamps illuminate" .

STEP 4. Retest the system
Check that the comfort flashing function works normally.

Q: Is the check result normal?
YES : The trouble can be an intermittent malfunction (Refer to GROUP 00 – How to use Troubleshooting/inspection Service Points – How to Cope with Intermittent Malfunction).
NO : Replace the ETACS-ECU.

www.cargeek.ir

www.CarGeek.ir

Inspection Procedure 12: The turn-signal indicator lamps do not illuminate.

⚠ CAUTION

Whenever the ECU is replaced, ensure that the power supply circuit, the earth circuit and the communication circuit are normal.

COMMENTS ON TROUBLE SYMPTOM

If the turn-signal lamp indicator does not illuminate normally, the harness in the CAN bus lines, connector(s), ETACS-ECU, or combination meter may have a problem.

PROBABLE CAUSES

- Malfunction of the ETACS-ECU
- Malfunction of combination meter
- Damaged harness wires and connectors

DIAGNOSIS PROCEDURE

STEP 1. Turn-signal lamp check

Check that the turn-signal lamp flashes normally when the turn-signal switch is operated.

Q: Is the check result normal?

YES : Go to Step 2.

NO : Refer to Inspection Procedure 10 "None of the turn-signal lamps illuminate" .

STEP 2. M.U.T.-III CAN bus diagnostics

Use the M.U.T.-III to diagnose the CAN bus lines.

Q: Is the check result normal?

YES : Go to Step 3.

NO : Repair the CAN bus line (Refer to GROUP 54C – Troubleshooting).

STEP 3. M.U.T.-III diagnosis code

Check if diagnosis code is set to the ETACS-ECU.

Q: Is the diagnosis code set?

YES : Troubleshoot the ETACS-ECU. Refer to .

NO : Go to Step 4.

STEP 4. M.U.T.-III actuator test

Perform the actuator test for the combination meter, and check that the turn-signal lamp indicator illuminates (Refer to Combination meter).

Q: Is the check result normal?

YES : Replace the ETACS-ECU.

NO : Replace the combination meter.

Inspection Procedure 13: One of the bending lamps does not illuminate.

⚠ CAUTION

Whenever the ECU is replaced, ensure that the power supply circuit, the earth circuit and the communication circuit are normal.

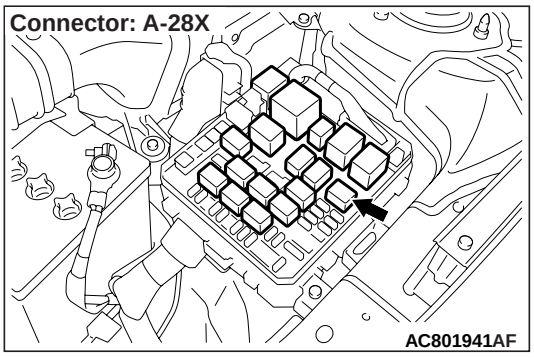

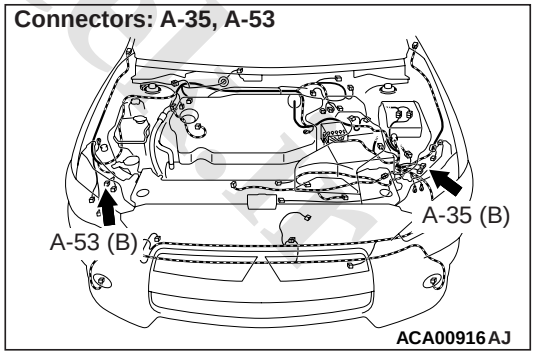

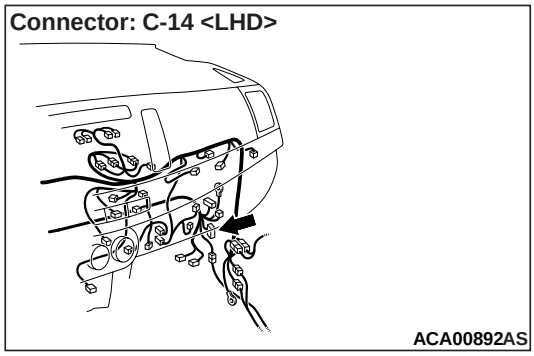

www.cargeek.ir

www.CarGeek.ir

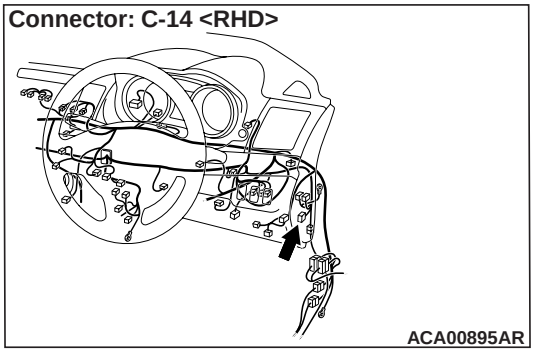

COMMENTS ON TROUBLE SYMPTOM

When one of the bending lamps is not turned ON, the harness, connector, bulb, or headlamp automatic levelling-ECU may be defective.

PROBABLE CAUSES

- Malfunction of the bending lamp bulbs
- Malfunction of the headlamp automatic levelling-ECU
- Damaged harness wires and connectors

DIAGNOSIS PROCEDURE

STEP 1. Check a trouble spot.

Q: Which bending lamp does not illuminate?
The LH-side does not illuminate. : Go to Step 2
The RH-side does not illuminate. : Go to Step 11

STEP 2. Connector check: A-35 headlamp assembly (LH) connector

Q: Is the check result normal?
YES : Go to Step 3.
NO : Repair the defective connector.

STEP 3. Bulb check

Check the bulb(s) of headlamp that does not illuminate.

Q: Is the check result normal?
YES : Go to Step 4.
NO : Replace the bulb(s) of the lamp that does not illuminate.

STEP 4. Connector check: C-14 headlamp automatic levelling-ECU connector

Q: Is the check result normal?
YES : Go to Step 5.
NO : Repair the defective connector.

STEP 5. Voltage measurement at C-14 headlamp automatic levelling-ECU connector

(1) Disconnect the connector, and measure at the wiring harness side.
(2) Turn the ignition switch to the ON position.
(3) Turn the lighting switch to the HEAD position.
(4) Turn the steering wheel anticlockwise for 104° or more.
(5) Measure the voltage between C-14 headlamp automatic levelling-ECU connector terminal No. 3 and the body earth.

OK: System voltage

Q: Is the check result normal?
YES : Go to Step 8.
NO : Go to Step 6.

STEP 6. Connector check: A-28X headlamp relay (LO) connector

Q: Is the check result normal?
YES : Go to Step 7.
NO : Repair the defective connector.

STEP 7. Wiring harness check between C-14 headlamp automatic levelling-ECU connector terminal No. 10 and A-28X headlamp relay (LO) connector terminal No. 3.

- Check the power supply line for open circuit and short circuit.

Q: Is the check result normal?
YES : The trouble can be an intermittent malfunction (Refer to GROUP 00 – How to use Troubleshooting/inspection Service Points – How to Cope with Intermittent Malfunction).
NO : Repair the wiring harness.

STEP 8. Resistance measurement at A-35 headlamp assembly (LH) connector

(1) Disconnect the connector, and measure at the wiring harness side.
(2) Measure the resistance between A-35 headlamp assembly (LH) connector terminal No. 8 and the body earth.

OK: Continuity exists (2 Ω or less)

Q: Is the check result normal?
YES : Go to Step 10.
NO : Go to Step 9.

www.cargeek.ir

STEP 9. Wiring harness check between A-35 headlamp assembly (LH) connector terminal No. 8 and body earth

- Check the earth wires for open circuit.

Q: Is the check result normal?
YES : The trouble can be an intermittent malfunction (Refer to GROUP 00 – How to use Troubleshooting/inspection Service Points – How to Cope with Intermittent Malfunction).
NO : Repair the wiring harness.

STEP 10. Wiring harness check between C-14 headlamp automatic levelling-ECU connector terminal No. 3 and A-35 headlamp assembly (LH) connector terminal No. 7.

- Check the signal line for open circuit and short circuit.

Q: Is the check result normal?
YES : Go to Step 20.
NO : Repair the wiring harness.

STEP 11. Connector check: A-53 headlamp assembly (RH) connector

Q: Is the check result normal?
YES : Go to Step 12.
NO : Repair the defective connector.

STEP 12. Bulb check

Check the bulb(s) of headlamp that does not illuminate.

Q: Is the check result normal?
YES : Go to Step 13.
NO : Replace the bulb(s) of the lamp that does not illuminate.

STEP 13. Connector check: C-14 headlamp automatic levelling-ECU connector

Q: Is the check result normal?
YES : Go to Step 14.
NO : Repair the defective connector.

STEP 14. Voltage measurement at C-14 headlamp automatic levelling-ECU connector

(1) Disconnect the connector, and measure at the wiring harness side.
(2) Turn the ignition switch to the ON position.
(3) Turn the lighting switch to the HEAD position.
(4) Turn the steering wheel clockwise for 104° or more.
(5) Measure the voltage between C-14 headlamp automatic levelling-ECU connector terminal No. 1 and the body earth.

OK: System voltage

Q: Is the check result normal?
YES : Go to Step 17.
NO : Go to Step 15.

STEP 15. Connector check: A-28X headlamp relay (LO) connector

Q: Is the check result normal?
YES : Go to Step 16.
NO : Repair the defective connector.

STEP 16. Wiring harness check between C-14 headlamp automatic levelling-ECU connector terminal No. 11 and A-28X headlamp relay (LO) connector terminal No. 3.

- Check the power supply line for open circuit and short circuit.

Q: Is the check result normal?
YES : The trouble can be an intermittent malfunction (Refer to GROUP 00 – How to use Troubleshooting/inspection Service Points – How to Cope with Intermittent Malfunction).
NO : Repair the wiring harness.

STEP 17. Resistance measurement at A-53 headlamp assembly (RH) connector

(1) Disconnect the connector, and measure at the wiring harness side.
(2) Measure the resistance between A-53 headlamp assembly (RH) connector terminal No. 8 and the body earth.

OK: Continuity exists (2 Ω or less)

Q: Is the check result normal?
YES : Go to Step 19.
NO : Go to Step 18.

STEP 18. Wiring harness check between A-53 headlamp assembly (RH) connector terminal No. 8 and body earth

- Check the earth wires for open circuit.

Q: Is the check result normal?
YES : The trouble can be an intermittent malfunction (Refer to GROUP 00 – How to use Troubleshooting/inspection Service Points – How to Cope with Intermittent Malfunction).
NO : Repair the wiring harness.

www.cargeek.ir

www.CarGeek.ir

STEP 19. Wiring harness check between C-14 headlamp automatic levelling-ECU connector terminal No. 1 and A-53 headlamp assembly (RH) connector terminal No. 7.

- Check the signal line for open circuit and short circuit.

Q: Is the check result normal?
YES : Go to Step 20.
NO : Repair the wiring harness.

STEP 20. M.U.T.-III data list
Check the headlamp automatic levelling-ECU service data.
(1) Turn the ignition switch to the ON position.
(2) Turn the lighting switch to the HEAD position.
(3) Turn the steering wheel anticlockwise for 104° or more.

Item No.	Item name	Normal condition
Item 50	Bending lamp LH (CAN output)	System voltage

(4) Turn the steering wheel clockwise for 104° or more.

Item No.	Item name	Normal condition
Item 51	Bending lamp RH (CAN output)	System voltage

OK: Normal conditions is displayed.

Q: Is the check result normal?
YES : Go to Step 21.
NO : Replace the headlamp automatic levelling-ECU.

STEP 21. Retest the system
Check that the AFS works normally.

Q: Is the check result normal?
YES : The trouble can be an intermittent malfunction (Refer to GROUP 00 – How to use Troubleshooting/inspection Service Points – How to Cope with Intermittent Malfunction).
NO : Replace the headlamp automatic levelling-ECU.

Inspection Procedure 14: The bending lamp illumination timing by the steering operation is failed.

⚠ CAUTION
Before replacing the ECU, ensure that the power supply circuit, the earth circuit and the communication circuit are normal.

COMMENTS ON TROUBLE SYMPTOM
headlamp automatic levelling-ECU turns ON the bending lamp when the rotation angle of the steering wheel for the speed exceeds the angle indicated in the Table 1. If it is not turned ON with the normal timing, the input signal system for the rotation angle of the steering wheel or the headlamp automatic levelling-ECU may be defective.

TABLE 1

Vehicle speed (km/h)	Rotation angle from neutral position of steering wheel (°)
0	104

PROBABLE CAUSES
- Malfunction of the steering wheel sensor
- Malfunction of the headlamp automatic levelling-ECU

DIAGNOSIS PROCEDURE

STEP 1. M.U.T.-III data list
Check the headlamp automatic levelling-ECU service data below.
- Turn the steering wheel.

Item No.	Item name	Normal condition
Item 10	SAS (Steering angle) (CAN input)	The display on M.U.T.-III changes together with the steering wheel operation.
Item 12	SAS status (CAN input)	Normal

OK: Normal condition is displayed.

Q: Is the check result normal?
YES : Go to Step 3.
NO : Go to Step 2.

www.cargeek.ir

www.CarGeek.ir

STEP 2. Steering wheel sensor check
Perform the steering wheel sensor neutral position learning (Refer to GROUP 35C – Steering Wheel Sensor Calibration), and then check the trouble symptom again.

Q: Is the check result normal?
YES : The diagnosis is complete.
NO : Replace the steering wheel sensor, and then go to Step 3.

STEP 3. Retest the system
Check that the bending lamps illuminate and go out normally.

Q: Is the check result normal?
YES : The trouble can be an intermittent malfunction (Refer to GROUP 00 – How to use Troubleshooting/inspection Service Points – How to Cope with Intermittent Malfunction).
NO : Replace the headlamp automatic levelling-ECU.

Inspection Procedure 15: The welcome light function does not work normally.

⚠ CAUTION
Whenever the ECU is replaced, ensure that the power supply circuit, the earth circuit and the communication circuit are normal.

COMMENTS ON TROUBLE SYMPTOM
When the welcome light function does not operate normally, the keyless entry system or the ETACS-ECU may have a problem. Or, the welcome light function may have been set to disabled using the customisation function.

PROBABLE CAUSES
- Malfunction of the keyless entry system
- Malfunction of the ETACS-ECU

DIAGNOSIS PROCEDURE

STEP 1. ETACS-ECU customise function check.
Check that any one of the followings other than "Disabled" is set for "Welcome light" with a customisation function.
- Small lamp
- Head lamp

Q: Is it set to other than "Disabled"?
YES : Go to Step 2.
NO : Set "Welcome light" to any one other than "Disabled" with a customise function (Refer to).

STEP 2. M.U.T.-III diagnosis code
Check if diagnosis code is set to the ETACS-ECU.

Q: Is the diagnosis code set?
YES : Troubleshoot the ETACS-ECU. Refer to .
NO : Go to Step 3.

STEP 3. Check the keyless entry system operation
Check that the keyless entry system operation normally.

Q: Is the check result normal?
YES : Go to Step 4.
NO : Troubleshoot the keyless entry system. Refer to GROUP 42B – Troubleshooting <KOS> or GROUP 42C – Troubleshooting <WCM>.

STEP 4. Check the tail lamps and headlamps.
When the lighting switch is operated, check that the tail lamps and headlamps illuminate/go off normally.

Q: Is the check result normal?
YES : Go to Step 5.
NO : Troubleshoot the tail lamps and headlamps. Refer to trouble symptom chart .

STEP 5. Retest the system.
The welcome light should work normally.

Q: Is the check result normal?
YES : The trouble can be an intermittent malfunction (Refer to GROUP 00 – How to use Troubleshooting/inspection Service Points – How to Cope with Intermittent Malfunction).
NO : Replace the ETACS-ECU.

www.cargeek.ir

www.CarGeek.ir

Inspection Procedure 16: The coming home light function does not work normally.

⚠ CAUTION
Whenever the ECU is replaced, ensure that the power supply circuit, the earth circuit and the communication circuit are normal.

COMMENTS ON TROUBLE SYMPTOM
When the coming home light function does not operate normally, the keyless entry system or the ETACS-ECU may have a problem. Or, the coming home light function may have been set to disabled using the customisation function.

PROBABLE CAUSES
- Malfunction of the keyless entry system
- Malfunction of the ETACS-ECU

DIAGNOSIS PROCEDURE

STEP 1. ETACS-ECU customise function check.
Check that any one of the followings other than "Disabled" is set for "Coming home light" with a customisation function.
- 15 sec
- 30 sec
- 60 sec
- 180 sec

Q: Is it set to other than "Disabled"?
YES : Go to Step 2.
NO : Set "Coming home light" to any one other than "Disabled" with a customise function (Refer to).

STEP 2. M.U.T.-III diagnosis code
Check if diagnosis code is set to the ETACS-ECU.

Q: Is the diagnosis code set?
YES : Troubleshoot the ETACS-ECU. Refer to .
NO : Go to Step 3.

STEP 3. M.U.T.-III data list
Using the ETACS-ECU service data, check the ignition switch signal.
- Turn the ignition switch to the LOCK (OFF) position.

Item No.	Item name	Normal condition
Item 254	IG voltage	1 V or less

OK: Normal condition is displayed.

Q: Is the check result normal?
YES : Go to Step 4.
NO : Troubleshoot the ETACS-ECU. Refer to Inspection Procedure 2 "The ignition switch (IG1) signal is not received" .

STEP 4. Check the headlamps.
When the lighting switch is operated, check that the headlamps illuminate/go off normally.

Q: Is the check result normal?
YES : Go to Step 5.
NO : Troubleshoot the headlamps. Refer to trouble symptom chart .

STEP 5. Retest the system.
The coming home light function should work normally.

Q: Is the check result normal?
YES : The trouble can be an intermittent malfunction (Refer to GROUP 00 – How to use Troubleshooting/inspection Service Points – How to Cope with Intermittent Malfunction).
NO : Replace the ETACS-ECU.

DATA LIST REFERENCE TABLE

M1540103800401

AFS <HEADLAMP AUTOMATIC LEVELLING-ECU>

Refer to Headlamp automatic levelling system .

www.cargeek.ir

LIN <LIGHTING CONTROL SENSOR (LAMP SENSOR)>

Item No.	M.U.T.-III display	Condition	Normal condition
7001	RLS IG1	When the ignition switch is turned to the LOCK or ACC position.	OFF
		When the ignition switch is turned to the ON or START position.	ON
7002	RLS Lamp sensor sensitivity	When the customise value of the lighting control sensor sensitivity is set to level 1 (quick).	Level 1 bright
		When the customise value of the lighting control sensor sensitivity is set to level 2 (slightly quick).	Level 2 bright
		When the customise value of the lighting control sensor sensitivity is set to level 3 (normal).	Level 3
		When the customise value of the lighting control sensor sensitivity is set to level 4 (slightly slow).	Level 4 dark
		When the customise value of the lighting control sensor sensitivity is set to level 5 (slow).	Level 5 dark
7004	RLS Radio ACC	When the ignition switch is turned to the LOCK or START position.	OFF
		When the ignition switch is turned to the ACC or ON position.	ON
7007	RLS Vehicle speed	Perform a test run of the vehicle.	The values displayed on the speedometer and M.U.T.-III are almost the same.
7009	RLS Low beam "ON" request	When the area around the lighting control sensor is bright.	OFF
		When the area around the lighting control sensor is dark.	ON
7010	RLS Judgement illuminance output	When the area around the lighting control sensor has become bright from dark	The value displayed on the M.U.T.-III becomes large.
		When the area around the lighting control sensor has become dark from bright.	The value displayed on the M.U.T.-III becomes small.
7011	RLS Tail lamp "ON" request	When the area around the lighting control sensor is bright.	OFF
		When the area around the lighting control sensor is dark.	ON
7012	RLS Tunnel detect output	When the area around the lighting control sensor is bright.	OFF
		When the area around the lighting control sensor is dark.	ON

www.cargeek.ir

www.CarGeek.ir

Item No.	M.U.T.-III display	Condition	Normal condition
7014	RLS Specification	–	EU
7015	RLS ECU Diagnostic version	–	–
7016	RLS ECU Hardware version	–	–
7017	RLS ECU Software version	–	–
7018	RLS ECU Part number	–	8634A052
7019	RLS ECU Serial number	–	–

ACTUATOR TEST TABLE

M1540103900066

AFS

Item No.	Item name	Test item	Driven content
1	Bending lamp LH	Bending lamp LH	The LH-side bending lamp illuminates for 10 seconds.
2	Bending lamp RH	Bending lamp RH	The RH-side bending lamp illuminates for 10 seconds.
4	Simulated speed	Bending lamp LH/RH	The simulated vehicle speed of 30 km/h is input to the headlamp automatic levelling-ECU, and the bending lamp to which the steering wheel is turned illuminates. The bending lamp illumination duration can be selected from 1 minute, 5 minutes or 10 minutes.

ON-VEHICLE SERVICE

HEADLAMP AIMING

M1540100500337

<USING A BEAM SETTING EQUIPMENT>

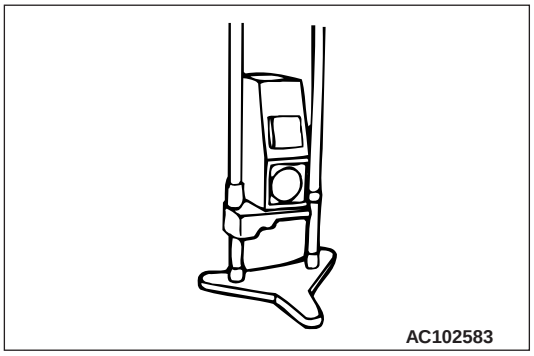

1. The headlamps should be aimed with the proper beam setting equipment, and in accordance with the equipment manufacture's instructions.
2. Alternately turn the adjusting screw to adjust the headlamp aiming.

<USING A SCREEN> (LOW-BEAM)

PRE-AIMING INSTRUCTION

1. Inspect for badly rusted or faulty headlamp assemblies.
2. These conditions must be corrected before a satisfactory adjustment can be made.
3. Inspect tyre inflation, and adjust if it is necessary.
4. If the fuel tank is not filled up, put weight in the luggage compartment to make up for the fuel shortage so that the weight will become 90% of full-state weight or heavier. (0.8 kg per litter)
5. There should be no other load in the vehicle other than driver or substituted weight of approximately 75 kg placed in driver's position.
6. Turn the headlamp levelling switch to the switch position "0." <Vehicles with headlamp manual levelling system>
7. Change the vehicle posture, and then operate the actuator of headlamp levelling unit once. <Vehicles with headlamp automatic levelling system>
8. Thoroughly clean the headlamp lenses.

www.cargeek.ir

www.CarGeek.ir

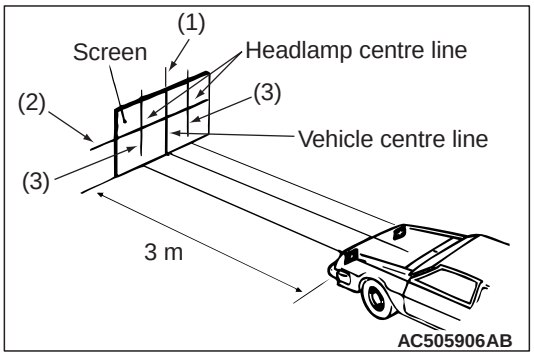

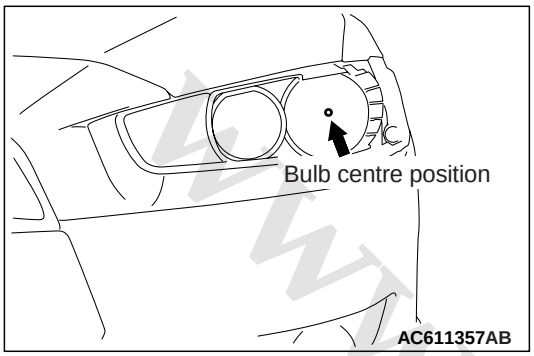

9. Place the vehicle on a level floor, perpendicular to a flat screen 3 m away from the bulb centre position of the low-beam.
10. Rock vehicle sideways to allow vehicle to assume its normal position.
11. To correct for distortion of the suspension, rock the bumpers on the front/rear side of the vehicle up and down three times alternately.
12. Run the engine at a speed of 2,000 r/min to charge the battery.
13. Four lines of adhesive tape (or equivalent markings) are required on screen or wall:
    (1) Position a vertical tape or mark so that it is aligned with the vehicle centre line.
    (2) Measure the distance from the bulb centre position to the floor. Transfer the measurement to the screen. Horizontal tape or mark on the screen is for reference of vertical adjustment.

    NOTE: Height from the floor to the centre of the headlamps (Reference value): 680 mm

    (3) Measure the distance from the centre line of the vehicle to the centre of each headlamp. Transfer the measurement to the screen. Vertical tape or mark on the screen with reference to the centre line of each headlamp bulb.

Horizontal direction; ± 26 mm (± 0.5°) from

HEADLAMP ADJUSTMENT

⚠ CAUTION

- **Do not cover a headlamp for more than three minutes to prevent the plastic headlamp lens deformation.**
- **Be sure to adjust the aiming adjustment screw in the tightening direction.**

1. The low-beam headlamp should project on the screen upper edge of the beam (cut-off).

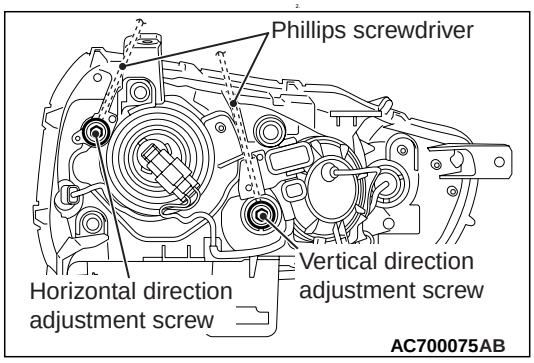

If not the case, turn the adjusting screws to achieve the specified low-beam cut-off location on the aiming screen.

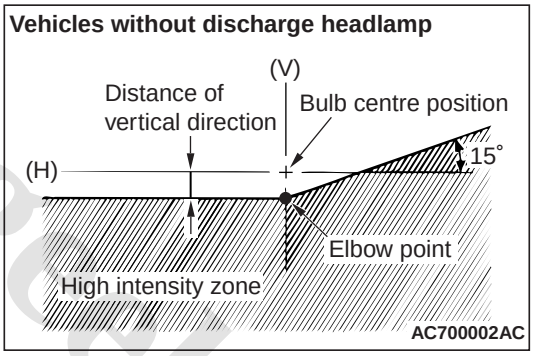

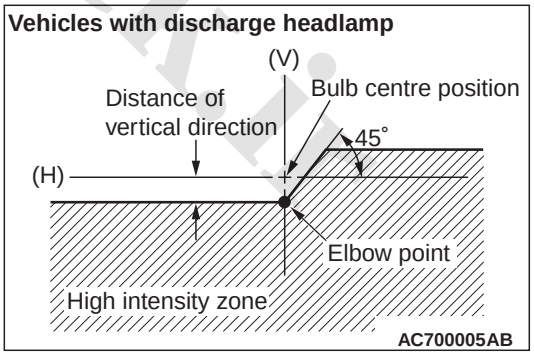

Standard value:
Vertical direction; 36 mm (0.69°) below horizontal (H)
Horizontal direction; Elbow point intersects the vertical line (V)

Limit:
Vertical direction; ±15 mm (±0.29°) from the horizontal cut-off line
the vertical line (V)

www.cargeek.ir

www.CarGeek.ir

LUMINOUS INTENSITY MEASUREMENT

M1540100600163

Using a photometer, and following its manufacture's instruction manual, measure the headlamp intensity and check to be sure that the limit value is satisfied.

Limit: 30,000 cd or more (When a screen is set 25m ahead of the vehicle)

NOTE:

1. *When measuring the intensity, maintain an engine speed of 2,000 r/min, with the battery in the charging condition.*
2. *There may be special local regulations pertaining to headlamp intensity, be sure to make any adjustments necessary to satisfy such regulations.*
3. *Check that the headlamp intensity of the high-beam satisfies the limit value.*
4. *If an illuminometer is used to make the measurements, convert its values to photometer values by using the following formula.*

   $I = Er^2$:

   I=intensity (cd)
   E=illumination (lux)
   r=distance (m) from headlamps to illuminometer

REPLACE THE BULB

M1540100700212

HEADLAMP BULB (LOW-BEAM) REPLACEMENT <VEHICLES WITHOUT DISCHARGE HEADLAMP>

⚠ CAUTION

Do not touch the bulb surface with bare hands or dirty gloves. If the bulb surface (glass part) gets dirty, immediately clean it with alcohol or thinner. After drying completely, install the bulb.

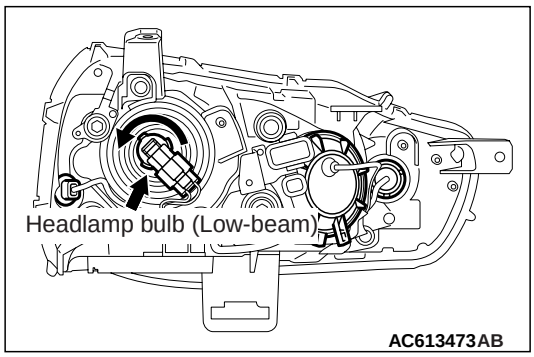

Disconnect the connector, and twist the headlamp bulb (low-beam) to remove.

HEADLAMP BULB (HIGH-BEAM) REPLACEMENT <VEHICLES WITHOUT DISCHARGE HEADLAMP> OR BENDING LAMP BULB REPLACEMENT<VEHICLES WITH DISCHARGE HEADLAMP>

⚠ CAUTION

Do not touch the bulb surface with bare hands or dirty gloves. If the bulb surface (glass part) gets dirty, immediately clean it with alcohol or thinner. After drying completely, install the bulb.

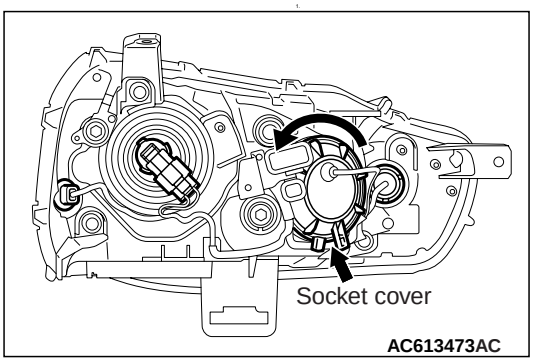

Twist the socket cover to remove.

2. Disconnect the connector, and twist the bulb to remove.

POSITION LAMP BULB REPLACEMENT

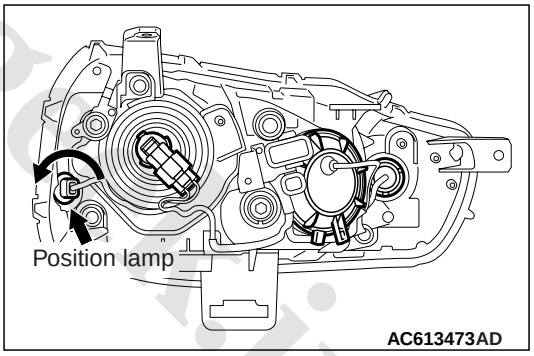

Disconnect the connector, and twist the position lamp socket to remove it.

FRONT TURN-SIGNAL LAMP BULB REPLACEMENT

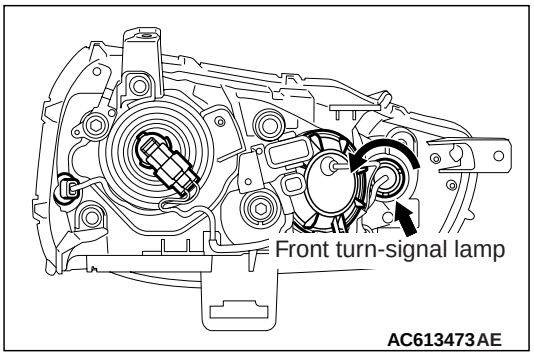

www.cargeek.ir

www.CarGeek.ir

Disconnect the connector, and twist the front turn-signal lamp socket to remove it.

HEADLAMP AUTOMATIC SHUTDOWN FUNCTION CHECK

M1540100800145

Confirm that the headlamps turn OFF in one second if the ignition key is pulled out and the driver's door is opened when the ignition switch is ON and the lighting switch is ON (HEAD position). If there is a malfunction, perform the troubleshooting (Refer to).

HEADLAMP AUTO LAMP FUNCTION CHECK

M1540100900186

Verify that the headlamps will illuminate when placing a hand over the light receiver of the lighting control sensor under direct sunlight with the ignition switch in the "ON" position and the lighting switch in the "AUTO" position. If there is a malfunction, perform the troubleshooting (Refer to).

NOTE: When covering the lighting control sensor receiver, be careful not to touch the windshield surface (where the lighting control sensor receiver is mounted). (The lighting control sensor receiver has limited resistance to oil.)

AFS OPERATION TEST

M1540108700302

PRECONDITIONS BEFORE THE OPERATION TEST

When all the conditions below are satisfied, AFS operation test can be performed.

- Stop the vehicle.
- Pull the parking brake lever. (The parking brake switch is in the ON state.)
- Set the shift lever <M/T> or selector lever <A/T and CVT> to the position other than the reverse position.
- Perform the operation test within 15 minutes after turning the ignition switch from OFF to ON.
- Turn the lighting switch to the HEAD or AUTO position. (The headlamp relay LO is ON.)
- The rotation angle of the steering wheel is 25° or less from the neutral position.

OPERATION TEST

1. When the steering wheel is turned toward either right or left to 45° or more from the neutral position, check if the bending lamp of the relevant side is turned ON.
2. When the rotation angle of steering wheel from the neutral position is returned to 25° or less, check that the bending lamp is turned OFF.

PROHIBITION CONDITIONS OF OPERATION TEST

If any of the conditions below are satisfied, AFS operation test will be prohibited.

- After the ignition switch is turned ON from OFF, 15 minutes or more has been elapsed.
- The vehicle is running.
- Set the shift lever <M/T> or selector lever <A/T and CVT> to the reverse position.
- A trouble occurs in AFS.

WELCOME LIGHT FUNCTION CHECK

M1540112700015

When the lighting switch is in the OFF or AUTO position, unlock the door by the keyless entry system and check that the tail lamps or headlamps turn on. If there is a malfunction, perform the troubleshooting (Refer to).

NOTE: As for the vehicles with lighting control sensor, carry out the inspection in the dark place.

COMING HOME LIGHT FUNCTION CHECK

M1540112800012

After turning the ignition switch to the LOCK (OFF) position, check that passing operation lights up the headlamps. If there is a malfunction, perform the troubleshooting (Refer to).

CUSTOMISE FUNCTION

M1540103701203

By operating the M.U.T.-III ETACS system or MMCS <Vehicles for Russia>, the following functions can be customised. The programmed information is held even when the battery is disconnected.

Adjustment item (M.U.T.-III display)	Adjustment item	Adjusting content (M.U.T.-III display)	Adjusting content
Turn power source	Adjustment of turn-signal lamp operation condition	ACC or IG1	Operable with ACC or ON position
		IG1	Operable with ON position (initial condition)

www.cargeek.ir

www.CarGeek.ir

Adjustment item (M.U.T.-III display)	Adjustment item	Adjusting content (M.U.T.-III display)	Adjusting content
Comfort flasher	With/without comfort flasher function	Disable	No function
		Enable	With function (initial condition)
Comfort flasher switch time	Switch operation time to activate the comfort flasher function	Normal	0.4 second (initial condition)
		Long	0.8 second
Hazard answer back	Adjustment of the number of keyless hazard warning lamp answer back flashes	Lock:1, Unlock:2	LOCK: Flashes once, UNLOCK: Flashes twice (initial condition)
		Lock:1, Unlock:0	LOCK: Flashes once, UNLOCK: No flash
		Lock:0, Unlock:2	LOCK: No flash, UNLOCK: Flash twice
		Lock:2, Unlock:1	LOCK: Flash twice, UNLOCK: Flash once
		Lock:2, Unlock:0	LOCK: Flash twice, UNLOCK: No flash
		Lock:0, Unlock:1	LOCK: No flash, UNLOCK: Flash once
		Lock:0, Unlock:0	No function
Sensitivity for auto lamp	Lighting control sensor sensitivity (illumination intensity) <vehicles with auto lamp>	Level 1 bright	High-high ambient brightness
		Level 2 bright	High ambient brightness
		Level 3	Standard ambient brightness (initial condition)
		Level 4 dark	Low ambient brightness
		Level 5 dark	Low-low ambient brightness
Head lamp auto cut customise	Adjustment of headlamp automatic shutdown function	Disable	No function
		Enable (B-spec.)	With function (initial condition)
Coming home light	Disabling or enabling coming home light function	Disabled	No function
		15 sec	The headlamps illuminate for 15 seconds.
		30sec	The headlamps illuminate for 30 seconds. (initial condition)
		60 sec	The headlamps illuminate for 60 seconds.
		180 sec	The headlamps illuminate for 180 seconds.
Welcome light	Disabling or enabling welcome light function	Disabled	No function <Initial condition (vehicles for RUSSIA)>
		Small	The tail lamp illuminates. <Initial condition (except vehicles for RUSSIA)>
		Head	The headlamps illuminate.

www.cargeek.ir

www.CarGeek.ir

HEADLAMP REMOVAL AND INSTALLATION

M1540101000506

Post-installation operation
Check the beam direction of the headlamp (Refer to Headlamp Aiming).

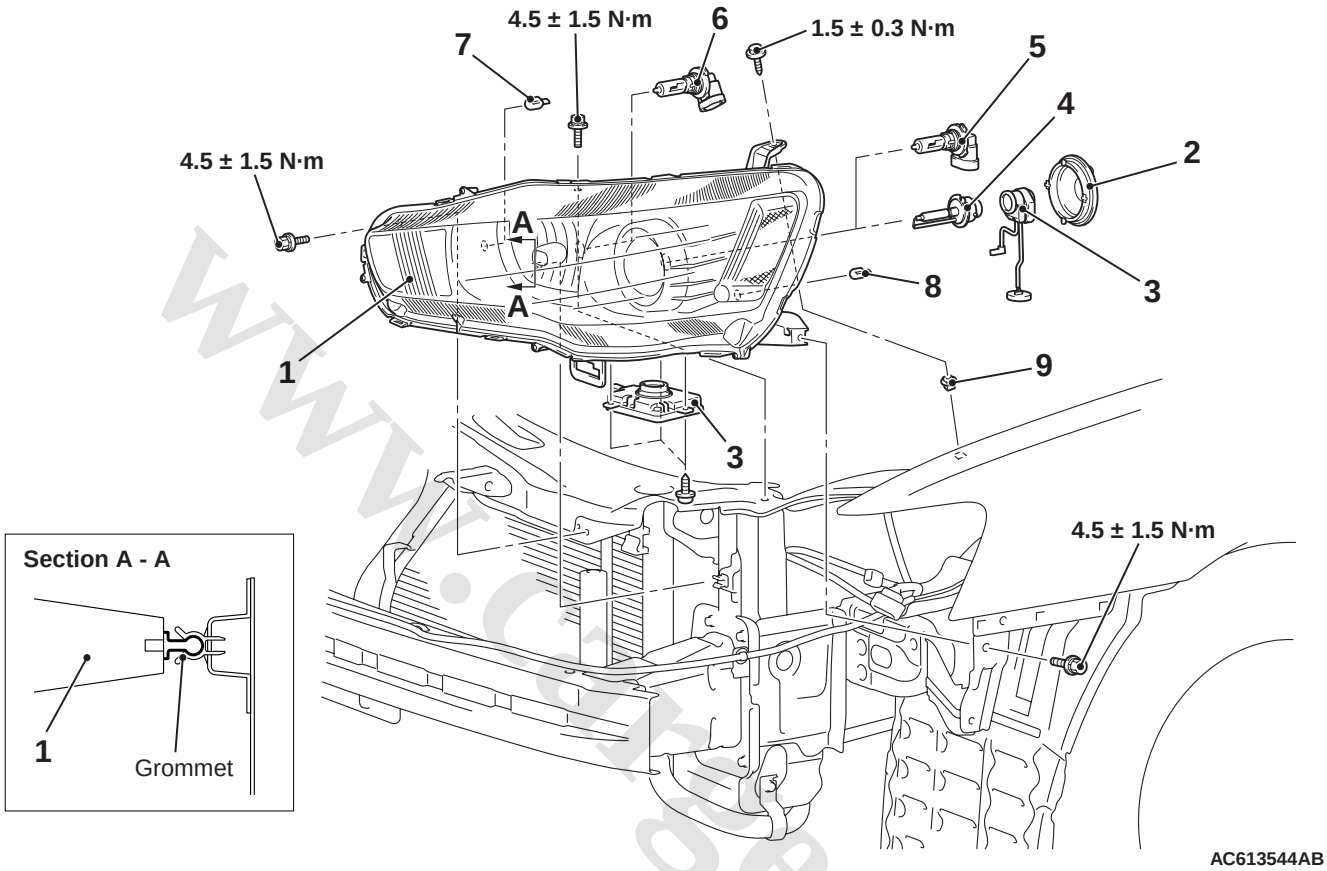

Removal Steps

- Front bumper and radiator grille assembly (Refer to GROUP 51 - Front Bumper Assembly and Radiator Grille).

1. Headlamp assembly
2. Headlamp bulb socket cover <Vehicles with discharge headlamp>

<<A>> >>A<< 3. Headlamp control unit <Vehicles with discharge headlamp>

<<B>> 4. Headlamp bulb <Vehicles with discharge headlamp>

5. Headlamp bulb (low-beam) <Vehicles without discharge headlamp>
6. Headlamp bulb (high-beam) <Vehicles without discharge headlamp> or bending lamp <Vehicles with discharge headlamp>
7. Front turn-signal lamp bulb
8. Position lamp bulb
9. Grommet

REMOVAL SERVICE POINTS

<<A>> HEADLAMP CONTROL UNIT (HARNESS) REMOVAL <VEHICLES WITH DISCHARGE HEADLAMP>

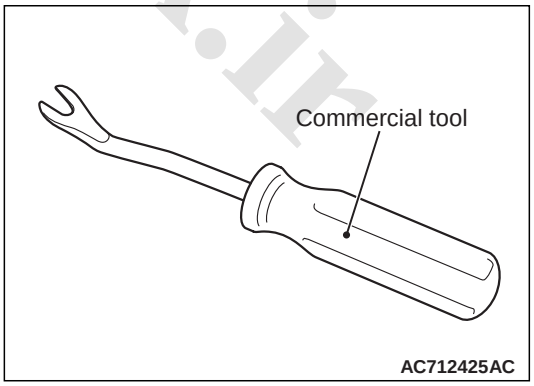

1. As shown in the figure, use the commercial tool to remove it.

www.cargeek.ir

www.CarGeek.ir

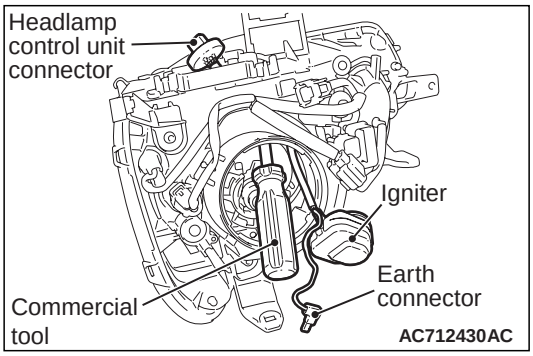

2. To insert the tool available in the market into the headlamp assembly from the opening at the igniter side, firstly remove the headlamp control unit, the socket cover, the igniter and the earth connector.

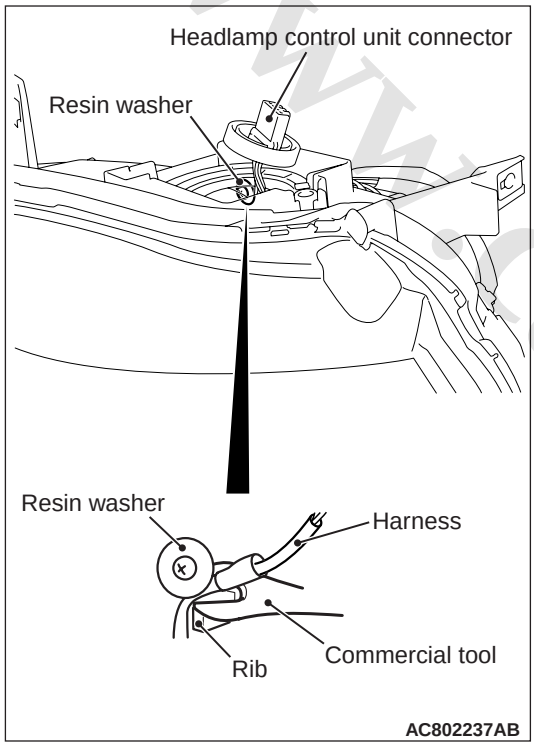

3. Using the commercial tool, make the resin washer sag to push up the harness above the resin washer.
4. Pull out the harness from the headlamp assembly.

<<B>> HEADLAMP BULB REMOVAL <VEHICLES WITH DISCHARGE HEADLAMP>

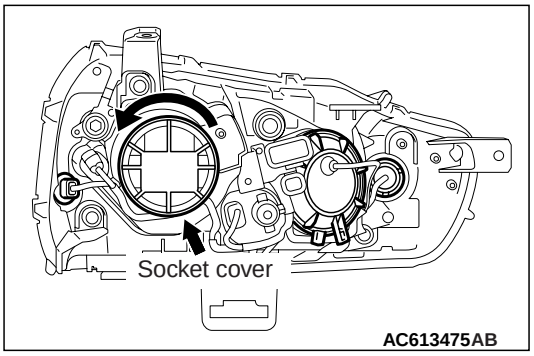

⚠ CAUTION

Do not touch the bulb surface with bare hands or dirty gloves. If the bulb surface (glass part) gets dirty, immediately clean it with alcohol or thinner. After drying completely, install the bulb.

1. Twist the socket cover to remove.

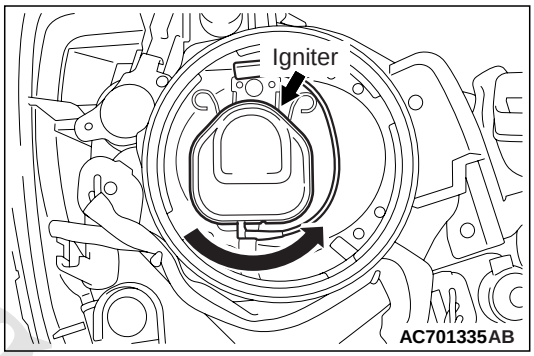

2. Disconnect the igniter.

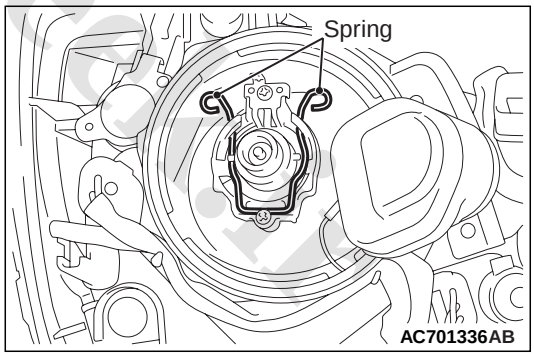

3. Release the bulb securing spring, and remove the bulb.

www.cargeek.ir

www.CarGeek.ir

INSTALLATION SERVICE POINT

>>A<< HEADLAMP CONTROL UNIT INSTALLATION <VEHICLES WITH DISCHARGE HEADLAMP>

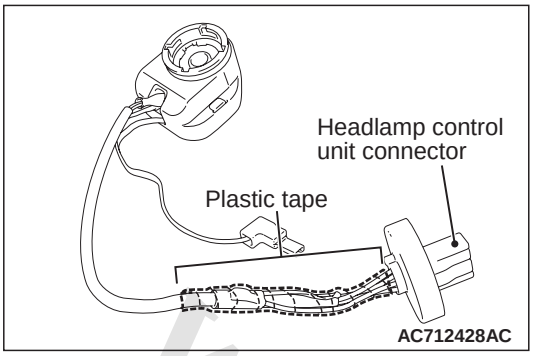

1. As shown in the figure, doubly wrap the portion in the vinyl tape, from the headlamp control unit connector root to the point where the harness separation is hidden.

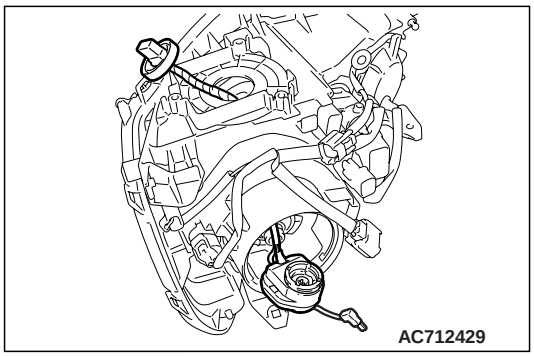

2. Install the harness to the headlamp assembly. At that time, fitting the harness into the resin washer is unnecessary.

HEADLAMP LEVELLING SWITCH REMOVAL AND INSTALLATION

M1540105200148

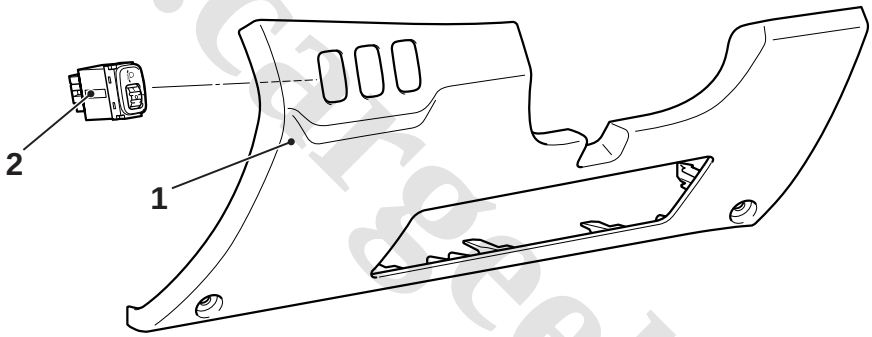

Removal Steps

1. Instrument lower panel (Refer to GROUP 52A – Instrument Lower Panel).
2. Headlamp levelling switch

www.cargeek.ir

www.CarGeek.ir

LIGHTING CONTROL SENSOR REMOVAL AND INSTALLATION

M1540108500148

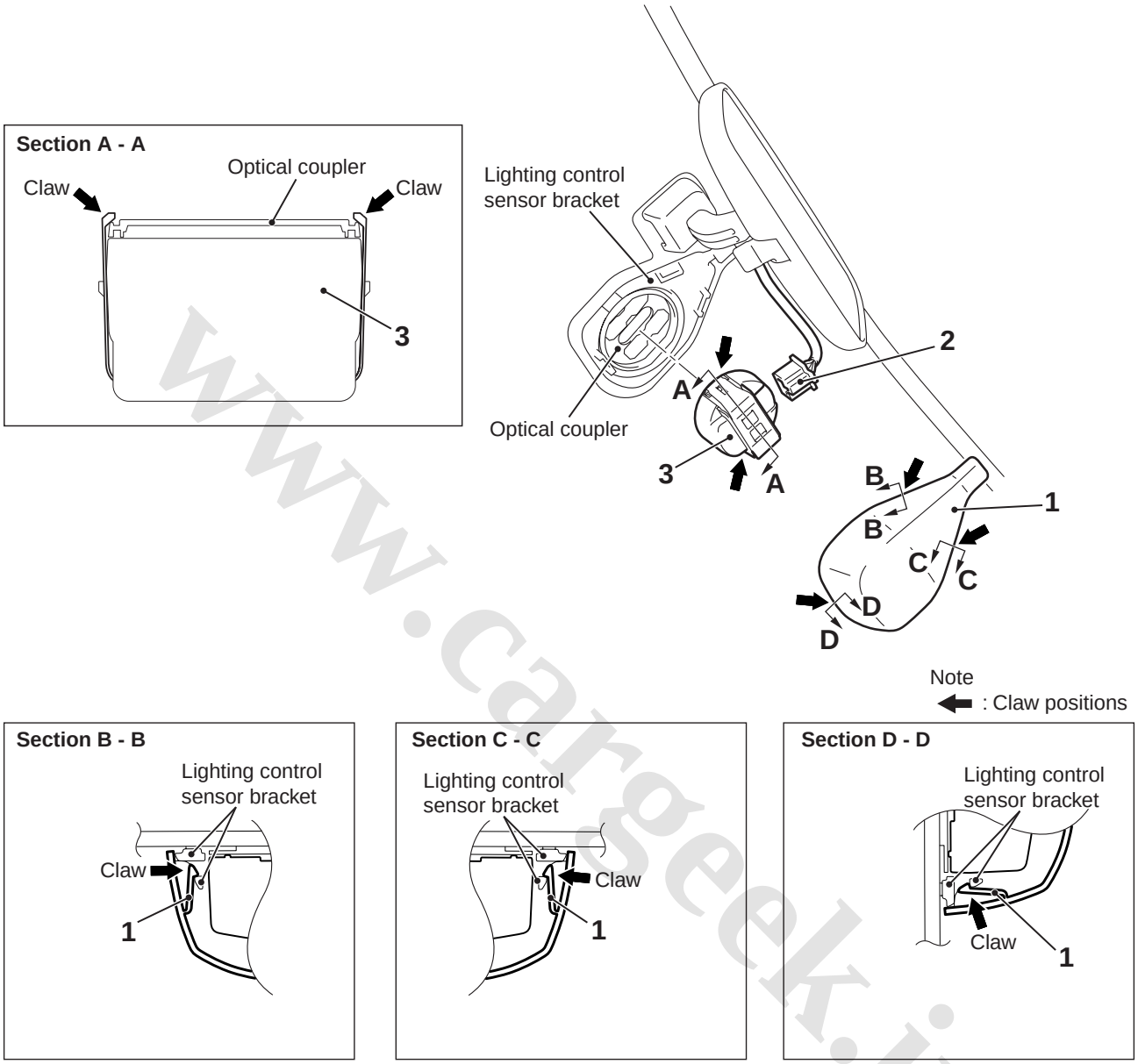

AC709856AB

Removal Steps

1. Lighting control sensor cover
2. Connector

<<A>> >>A<< 3. Lighting control sensor

REMOVAL SERVICE POINT

<<A>> LIGHTING CONTROL SENSOR REMOVAL

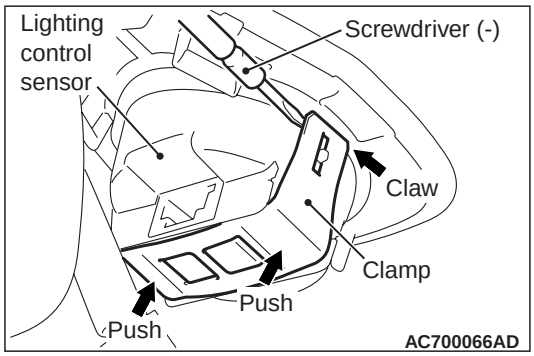

While pushing the clamp to the windshield side, pry up the clamp to disengage the right and left claws using the screwdriver (–), and then remove the lighting control sensor.

www.cargeek.ir

www.CarGeek.ir

INSTALLATION SERVICE POINT

>>A<< LIGHTING CONTROL SENSOR INSTALLATION

⚠ CAUTION

After executing the lighting control sensor (rain sensor) adaptation, do not touch the lighting control sensor (or do not move it from the fixed position).

- Mount the lighting control sensor onto the optical coupler, and then connect the connector.
- When reusing the lighting control sensor or when the lighting control sensor is pushed to check the installation condition, install the connector and the lighting control sensor cover and wipe the windshield thoroughly. When the windshield is dry, execute the lighting control sensor (rain sensor) adaptation. <Refer to GROUP 51 – Lighting Control Sensor (Rain Sensor) Adaptation >.

NOTE: Be careful not to touch the lighting control sensor receiver. (The lighting control sensor receiver has limited resistance to oil.)

INSPECTION

HEADLAMP RELAY CHECK

M1540104000185

HEADLAMP RELAY (LO) CHECK

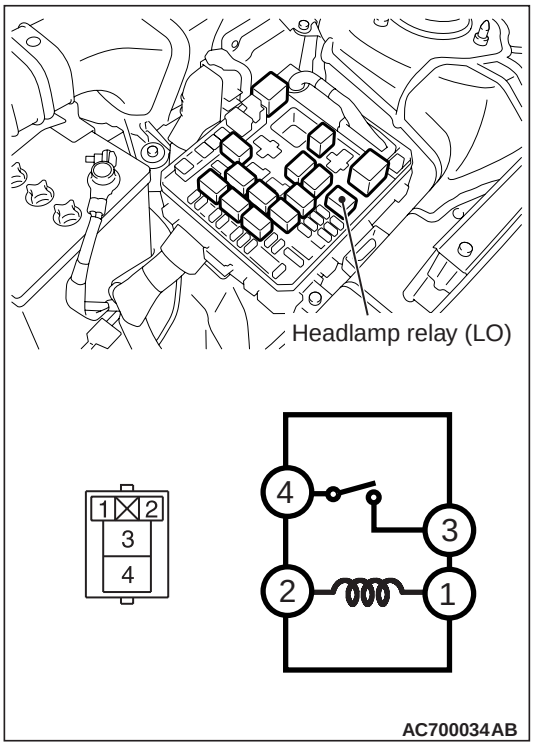

Battery voltage	Terminal number	Normal condition
At no energisation	3 – 4	No continuity
With current supply [terminal 2 (+), terminal 1 (–)]		Continuity exists (2 Ω or less)

HEADLAMP RELAY (HI) CHECK

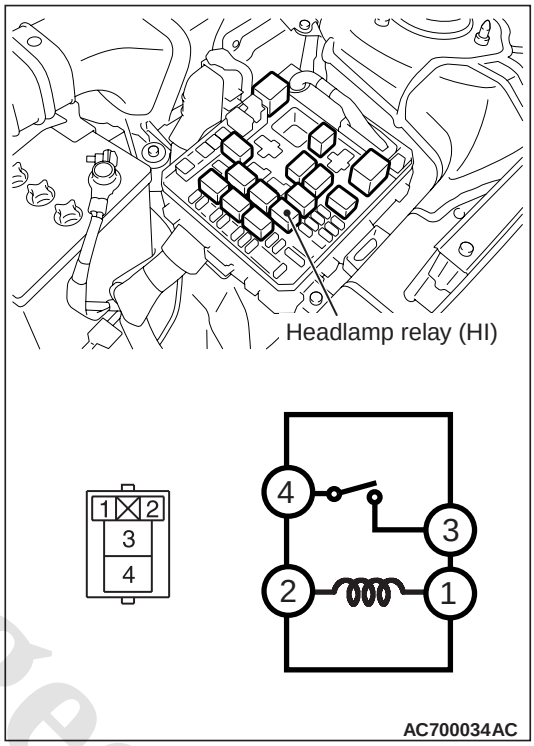

Battery voltage	Terminal number	Normal condition
At no energisation	3 – 4	No continuity
With current supply [terminal 2 (+), terminal 1 (–)]		Continuity exists (2 Ω or less)

www.cargeek.ir

www.CarGeek.ir

HEADLAMP LEVELLING SWITCH CHECK <VEHICLES WITH HEADLAMP MANUAL LEVELLING SYSTEM>

M1540101300187

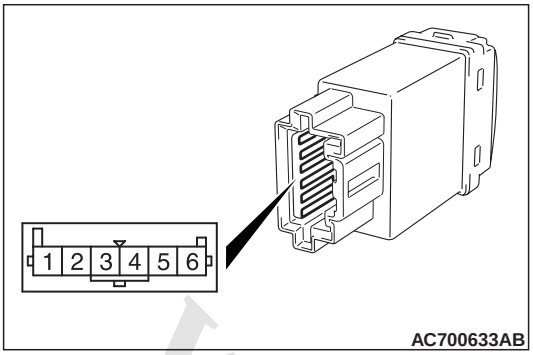

Measured terminals	Switch position	Resistance value Ω
4 – 6	0	750
	1	1,110
	2	1,470
	3	1,830
	4	2,190
5 – 6	0, 1, 2, 3, 4	2,810

LIGHTING CONTROL SENSOR (LAMP SENSOR) CHECK

M1540109000146

Use M.U.T.-III to check the LIN data list as follows.

1. Under the direct sunlight, turn the ignition switch to the ON position, and turn the lighting switch to the auto lamp position.
2. When the lighting control sensor receiver is covered to be darkened, it is judged normal if the items of No. 7009: RLS Low beam "ON" request and 7011: RLS Taillamp "ON" request change from OFF to ON.

NOTE:

- *When covering the lighting control sensor receiver, be careful not to touch the windshield surface (where the lighting control sensor receiver is mounted). (The lighting control sensor receiver has limited resistance to oil.)*
- *Before checking the data list by using M.U.T.-III, wipe the windshield thoroughly and visually check if there are foreign materials on the windshield to which the lighting control sensor is installed.*

BRACKET REPAIR OF HEADLAMP ASSEMBLY

M1540104500102

⚠ CAUTION

- **If damage is present to locations other than the repairable bracket, replace the assembly.**
- **Apply a tape to the area around the damaged bracket to prevent damage.**
- **During repair work, be careful not to damage the repair bracket installation bosses.**

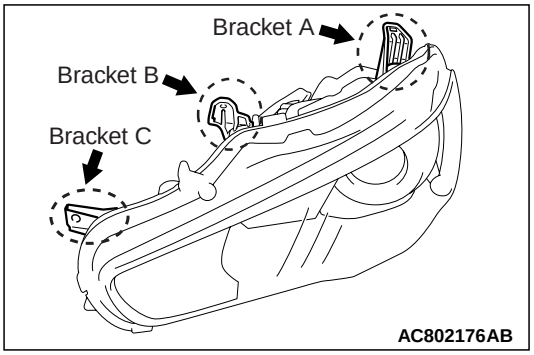

When brackets A, B and C shown in the figure are damaged, a low-cost repair can be performed by mounting a repair bracket.

OPERATIONS BEFORE REPAIRING BRACKET

Remove the headlamp assembly.

REPAIR PROCEDURE OF BRACKET A

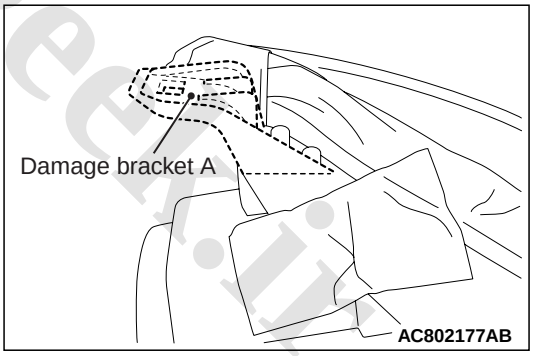

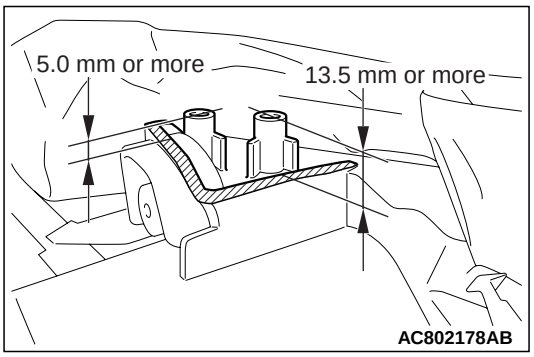

1. Cut the damaged bracket A so that it has the larger dimension than the dimension shown in the figure from the mounting boss seating face.

www.cargeek.ir

2. Smoothen the bracket cut surface using the sandpaper.

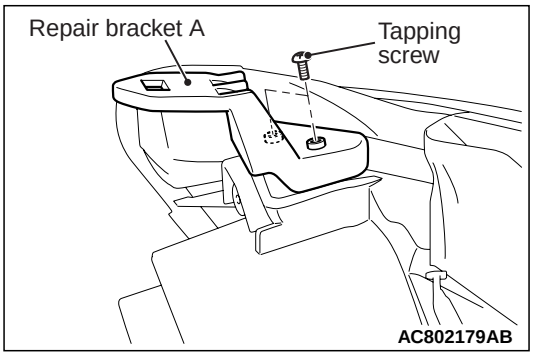

3. Fix the repair bracket A to the headlamp assembly using the tapping screw.

REPAIR PROCEDURE OF BRACKET B

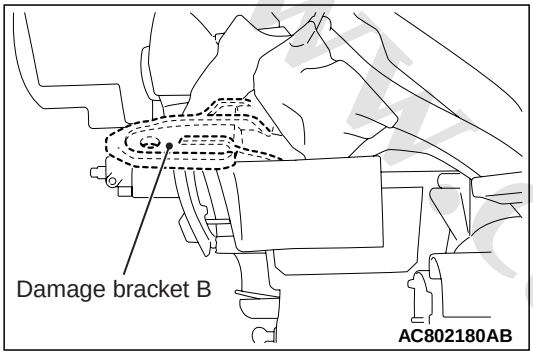

1. Cut off the damaged bracket B.

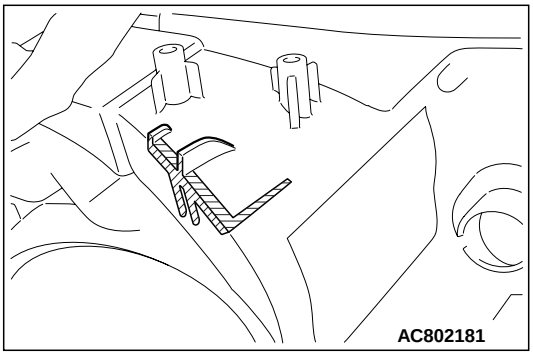

2. Remove the remaining bracket cut surface using the sandpaper.

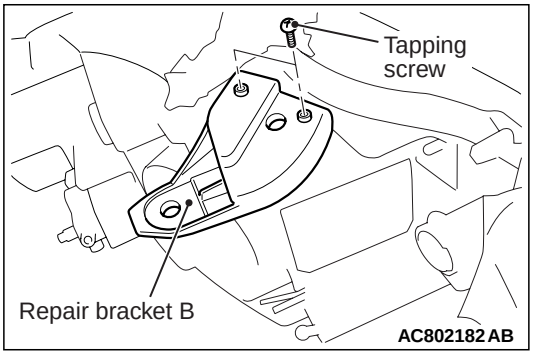

3. Fix the repair bracket B to the headlamp assembly using the tapping screw.

REPAIR PROCEDURE OF BRACKET C

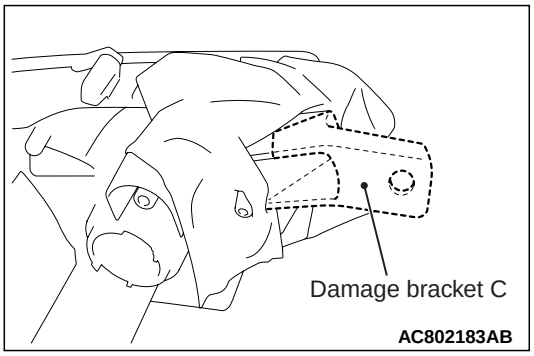

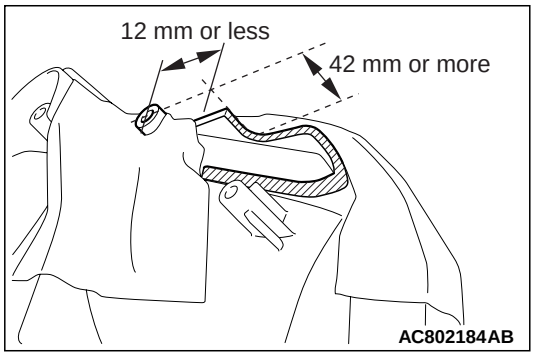

1. Cut the damaged bracket C so that it has the dimension shown in the figure.
2. Smoothen the bracket cut surface using the sandpaper.

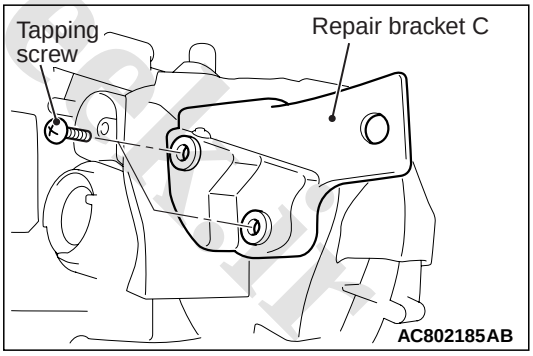

3. Fix the repair bracket C to the headlamp assembly using the tapping screw.

OPERATIONS AFTER REPAIRING BRACKET

1. Mount the headlamp assembly to the vehicle.
2. Check that the headlamp assembly does not vibrate during driving.
3. Check whether each lamp built in the headlamp assembly and the headlamp levelling system are properly operated.

www.cargeek.ir

www.CarGeek.ir

4. Perform the headlamp aiming adjustment and light intensity measurement.

REPAIR BRACKET PART NUMBER

Part name	Part number
Headlamp (LH) bracket kit	8301B173
Headlamp (RH) bracket kit	8301B174

www.cargeek.ir

www.cargeek.ir

www.CarGeek.ir

HEADLAMP AUTOMATIC LEVELLING SYSTEM

SPECIAL TOOLS

M1540300200147

www.cargeek.ir

www.cargeek.ir

www.CarGeek.ir

Tool	Number	Name	Use
a 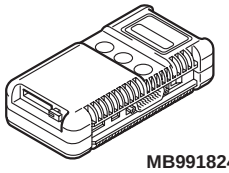 MB991824 b 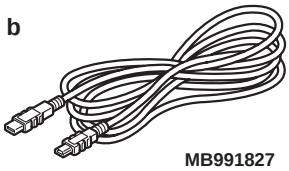 MB991827 c 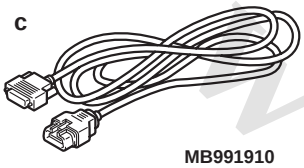 MB991910 d 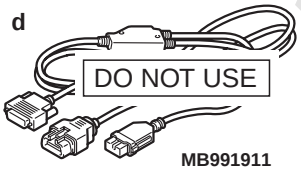 DO NOT USE MB991911 e 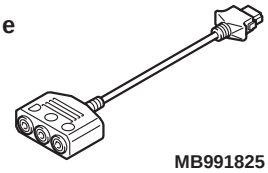 MB991825 f 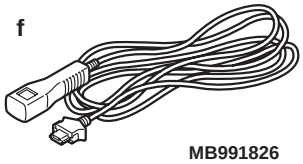 MB991826 MB991955	MB991955 a. MB991824 b. MB991827 c. MB991910 d. MB991911 e. MB991825 f. MB991826	M.U.T.-III sub-assembly a. Vehicle Communication Interface (V.C.I.) b. M.U.T.-III USB cable c. M.U.T.-III main harness A (Vehicles with CAN communication system) d. M.U.T.-III main harness B (Vehicles without CAN communication system) e. M.U.T.-III measure adapter f. M.U.T.-III trigger harness	⚠ CAUTION **For vehicles with CAN communication, use M.U.T.-III main harness A to send simulated vehicle speed. If you connect M.U.T.-III main harness B instead, the CAN communication does not function correctly.** Diagnosis code check.
a 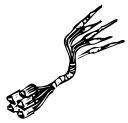 b 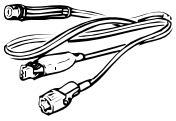 c 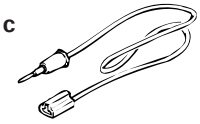 d DO NOT USE MB991223	MB991223 a. MB991219 b. MB991220 c. MB991221 d. MB991222	Harness set a. Check harness b. LED harness c. LED harness adapter d. Probe	Continuity check and voltage measurement at harness wire or connector a. For checking connector pin contact pressure b. For checking power supply circuit c. For checking power supply circuit d. For connecting a locally sourced tester

www.cargeek.ir

www.CarGeek.ir

Tool	Number	Name	Use
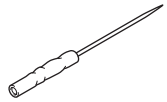 MB992006	MB992006	Extra fine probe	Continuity check and voltage measurement at harness wire or connector
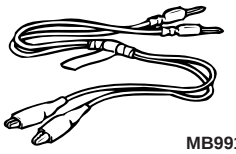 MB991529	MB991529	Diagnosis code check harness	Levelling motor drive test
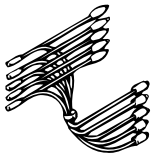 MB991658	MB991658	Test harness	Height sensor check

TROUBLESHOOTING

STANDARD FLOW OF DIAGNOSTIC TROUBLESHOOTING

M1540302800101

Refer to GROUP 00 – Contents of Troubleshooting .

DIAGNOSIS FUNCTION

M1540300400282

HOW TO READ DIAGNOSIS CODE

Refer to GROUP 00 – Diagnosis function .

HOW TO ERASE DIAGNOSIS CODE

Refer to GROUP 00 – Diagnosis function .

DIAGNOSIS CODE CHART

M1540300500386

⚠ CAUTION

- **On troubleshooting, if the ignition switch is turned ON while disconnecting connector(s), diagnosis code(s) associated with other system may be set. On completion, confirm all systems for diagnosis code(s). If diagnosis code(s) are set, erase them all.**
- **Before or after the troubleshooting, check the operation of the headlamp automatic levelling system. Refer to .**

Diagnosis code No.	Diagnostic item	Reference page
B2510	Auto levelling initialization not completed	
B2511	ECU internal error (ROM)	
B2512	ECU internal error (EEPROM)	
B2513	Levelling actuator output error	
B2514	Height sensor power supply error	
B2516	Rear height sensor signal error	
U0001	Bus-off (CAN-C)	
U0100	Engine CAN time-out	
U0121	ASC/ABS CAN time-out	

www.cargeek.ir

www.CarGeek.ir

Diagnosis code No.	Diagnostic item	Reference page
U0141	ETACS CAN time-out	
U1415	Coding not completed/failed	
U1417	Abnormality in coding data	

DIAGNOSIS CODE PROCEDURES

Code No. B2510 Auto levelling initialization not completed

⚠ CAUTION

- **If there is any problem in the CAN bus lines, an incorrect diagnosis code may be set. Prior to this diagnosis, always diagnose the CAN bus lines.**
- **Before replacing the ECU, ensure that the power supply circuit, the earth circuit and the communication circuit are normal.**

DIAGNOSTIC FUNCTION

When the headlamp automatic levelling system initialization * is not implemented, the headlamp automatic levelling system warning is displayed on the multi information display and the code No. B2510 is stored. When the headlamp automatic levelling system initialization is completed, the code No. B2510 is cleared automatically.

*NOTE: *: When the height sensor related diagnosis code (B2514 or B2516) or headlamp automatic levelling-ECU related diagnosis code (B2511 or B2512) is set, initialization of the headlamp automatic levelling system is impossible, therefore perform the troubleshooting for the diagnosis code that has been set previously.*

JUDGEMENT CRITERIA

Initialization of the headlamp automatic levelling system is not completed.

PROBABLE CAUSES

- Headlamp automatic levelling system initialization not completed
- Malfunction of the headlamp automatic levelling-ECU

DIAGNOSIS PROCEDURE

STEP 1. M.U.T.-III CAN bus diagnostics

Use the M.U.T.-III to diagnose the CAN bus lines.

Q: Is the check result normal?

YES : Go to Step 2.

NO : Repair the CAN bus line (Refer to GROUP 54C – Troubleshooting).

STEP 2. M.U.T.-III diagnosis code

Check if the height sensor related diagnosis code (B2514 or B2516) or the headlamp automatic levelling-ECU related diagnosis code (B2511 or B2512) is set.

Q: Is the diagnosis code set?

YES : Perform the troubleshooting of the diagnosis code that has been set previously.

NO : Go to Step 3.

STEP 3. Check whether the diagnosis code is reset.

Initialize the headlamp automatic levelling system and check the diagnosis code of the headlamp automatic levelling-ECU.

(1) Initialize the headlamp automatic levelling system. Refer to .

(2) Turn the ignition switch from "LOCK" (OFF) position to "ON" position.

(3) Check if diagnosis code is set.

Q: Is the diagnosis code set?

YES : Replace the headlamp automatic levelling-ECU.

NO : The trouble can be an intermittent malfunction (Refer to GROUP 00 – How to use Troubleshooting/inspection Service Points – How to Cope with Intermittent Malfunction).

www.cargeek.ir

www.CarGeek.ir

Code No. B2513 Levelling actuator output error

⚠ CAUTION

Before replacing the ECU, ensure that the power supply circuit, the earth circuit and the communication circuit are normal.

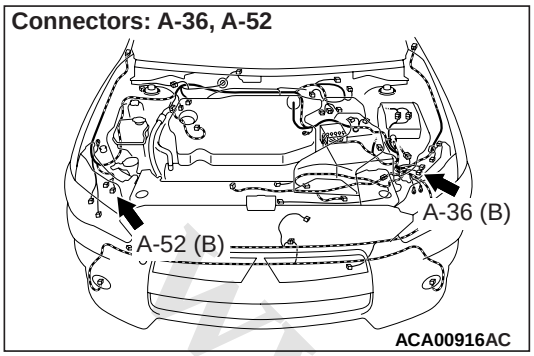

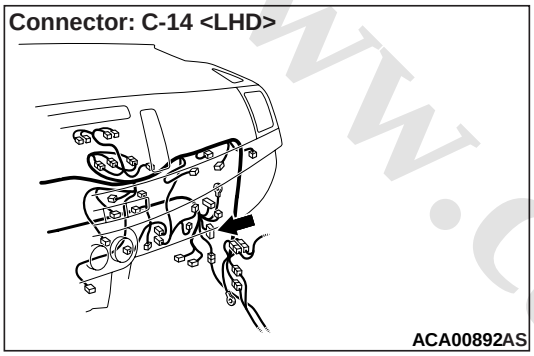

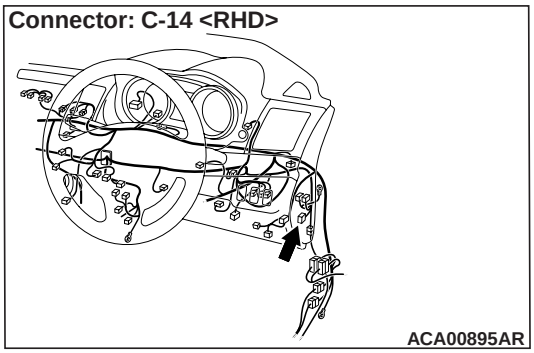

DIAGNOSTIC FUNCTION

If a trouble occurs in headlamp assembly (headlamp levelling unit), headlamp automatic levelling system warnings are displayed on the multi information display and code No. B2513 is stored.

JUDGEMENT CRITERIA

The headlamp automatic levelling-ECU detects the short-circuit of the signal line to the headlamp levelling unit for 1 second or longer continuously.

PROBABLE CAUSES

- Malfunction of headlamp assembly (headlamp levelling unit)
- Malfunction of the headlamp automatic levelling-ECU
- Damaged harness wires and connectors

DIAGNOSIS PROCEDURE

STEP 1. Connector check: A-36 headlamp assembly (LH) connector, C-14 headlamp automatic levelling-ECU connector

Q: Is the check result normal?
YES : Go to Step 2.
NO : Repair the defective connector.

STEP 2. Wiring harness check between the A-36 headlamp assembly (LH) connector terminal No. 6 and the C-14 headlamp automatic levelling-ECU connector terminal No. 14

- Check the signal lines for short circuit.

Q: Is the check result normal?
YES : Go to Step 3.
NO : Repair the wiring harness.

STEP 3. Check whether the diagnosis code is reset.

Q: Is diagnosis code No. B2513 set?
YES : Go to Step 4.
NO : The trouble can be an intermittent malfunction (Refer to GROUP 00 – How to use Troubleshooting/inspection Service Points – How to cope with Intermittent Malfunction).

STEP 4. Connector check: A-52 headlamp assembly (RH) connector

Q: Is the check result normal?
YES : Go to Step 5.
NO : Repair the defective connector.

STEP 5. Wiring harness check between the A-52 headlamp assembly (RH) connector terminal No. 6 and the C-14 headlamp automatic levelling-ECU connector terminal No. 13

- Check the signal lines for short circuit.

Q: Is the check result normal?
YES : Go to Step 6.
NO : Repair the wiring harness.

www.cargeek.ir

www.CarGeek.ir

STEP 6. Check whether the diagnosis code is reset.

Q: Is diagnosis code No. B2513 set?
YES : Go to Step 7.
NO : The trouble can be an intermittent malfunction (Refer to GROUP 00 – How to use Troubleshooting/inspection Service Points – How to cope with Intermittent Malfunction).

STEP 7. M.U.T.-III data list
(1) Disconnect the headlamp assembly (LH) and (RH) connector.
(2) Turn the ignition switch from "LOCK" (OFF) position to "ON" position.

Item No.	Item name	Normal condition
Item 68	A/L actuator output voltage	Indicates the voltage value of system voltage within the range of 20 to 80%.

OK: Normal condition is displayed.

Q: Is the check result normal?
YES : Go to Step 8.
NO : Replace the headlamp automatic levelling-ECU.

STEP 8. Check the headlamp assembly (LH).
Check the headlamp assembly (LH) for internal failure.
(1) Disconnect the headlamp assembly (RH) connector.
(2) Turn the ignition switch from "LOCK" (OFF) position to "ON" position.
(3) Perform the drive test using the M.U.T.-III. Refer to .

Q: Is the check result normal?
YES : Go to Step 9.
NO : Replace the headlamp assembly (LH).

STEP 9. Check the headlamp assembly (RH).
Check the headlamp assembly (RH) for internal failure.
(1) Disconnect the headlamp assembly (LH) connector.
(2) Turn the ignition switch from "LOCK" (OFF) position to "ON" position.
(3) Perform the drive test using the M.U.T.-III. Refer to .

Q: Is the check result normal?
YES : Replace the headlamp automatic levelling ECU.
NO : Replace the headlamp assembly (RH).

Code No. B2514 Height sensor power supply error

⚠ CAUTION
Before replacing the ECU, ensure that the power supply circuit, the earth circuit and the communication circuit are normal.

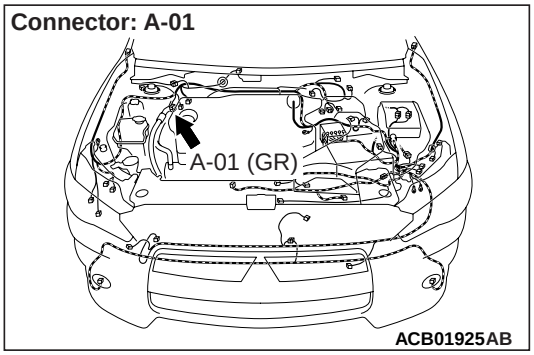

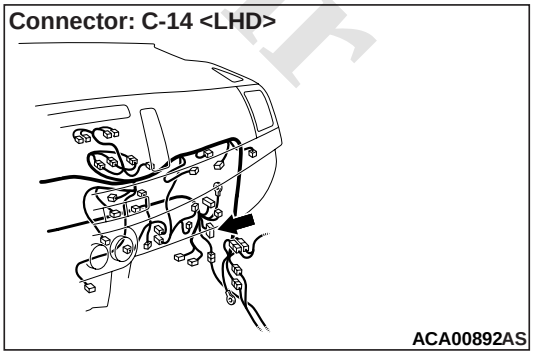

www.cargeek.ir

www.CarGeek.ir

Connector: C-14 <RHD>

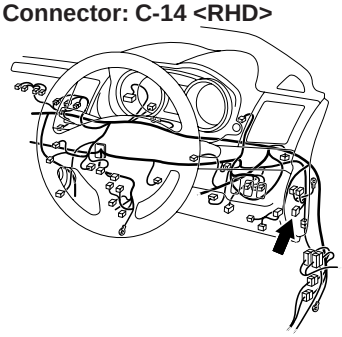

ACA00895AR

Connector: F-02 <LANCER SPORTBACK>

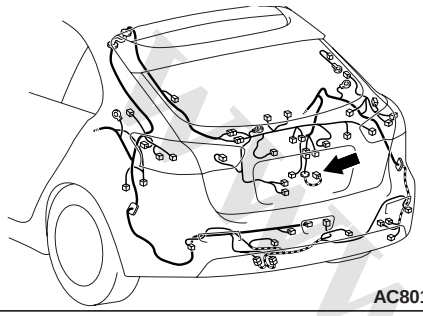

AC801775BU

Connector: F-02 <LANCER>

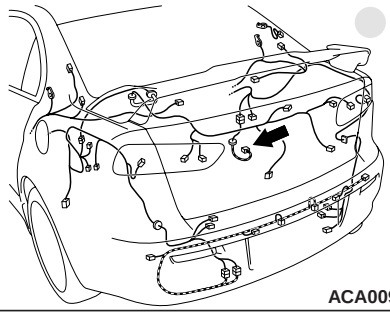

ACA00901AD

DIAGNOSTIC FUNCTION

If a trouble occurs in height sensor, headlamp automatic levelling system warnings are displayed on the multi information display and code No. B2514 is stored.

JUDGEMENT CRITERIA

The headlamp automatic levelling-ECU detects the power supply error of the height sensor (less than 4.2 V, or 5.8 V or more) for 1 second or longer continuously.

PROBABLE CAUSES

- Malfunction of the rear height sensor
- Malfunction of the headlamp automatic levelling-ECU
- Damaged harness wires and connectors

DIAGNOSIS PROCEDURE

STEP 1. Connector check: A-01 connector assembly connector, C-14 headlamp automatic levelling-ECU connector

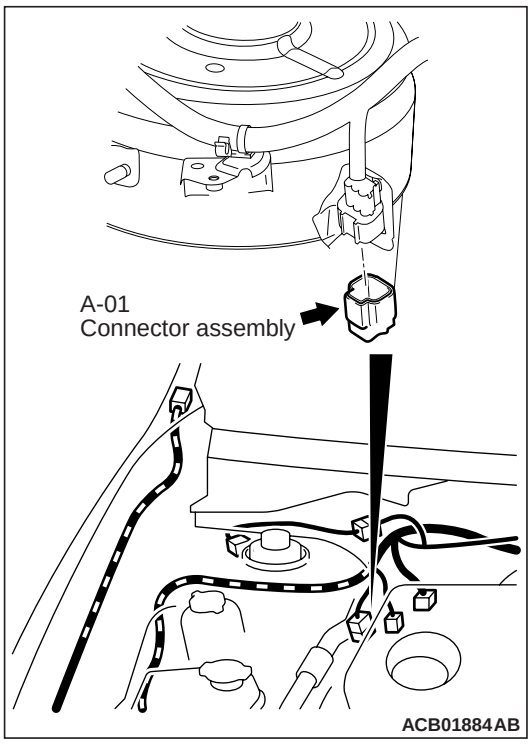

ACB01884AB

Q: Is the check result normal?
YES : Go to Step 2.
NO : Repair the defective connector.

STEP 2. Voltage measurement at the A-01 connector assembly connector.

(1) Disconnect the connector, and measure at the wiring harness-side connector.
(2) Turn the ignition switch to the ON position.
(3) Voltage between the A-01 connector assembly connector terminal No. 2 and the body earth

OK: 5 V

Q: Is the check result normal?
YES : Go to Step 4.
NO : Go to Step 3.

STEP 3. Wiring harness check between the A-01 connector assembly connector terminal No. 2 and the C-14 headlamp automatic levelling-ECU connector terminal No. 21.

- Check the power supply lines for short circuit.

Q: Is the check result normal?
YES : Go to Step 4.
NO : Repair the wiring harness.

www.cargeek.ir

www.CarGeek.ir

STEP 4. Check whether the diagnosis code is reset.

Q: Is diagnosis code No. B2514 set?
YES : Go to Step 5.
NO : The trouble can be an intermittent malfunction (Refer to GROUP 00 – How to use Troubleshooting/inspection Service Points – How to cope with Intermittent Malfunctions).

STEP 5. Connector check: F-02 rear height sensor connector, C-14 headlamp automatic levelling-ECU connector

Q: Is the check result normal?
YES : Go to Step 6.
NO : Repair the defective connector.

STEP 6. Voltage measurement at the F-02 rear height sensor connector.
(1) Disconnect the connector, and measure at the wiring harness-side connector.
(2) Turn the ignition switch to the ON position.
(3) Voltage between the F-02 rear height sensor connector terminal No. 1 and the body earth

OK: 5 V

Q: Is the check result normal?
YES : Go to Step 8.
NO : Go to Step 7.

STEP 7. Wiring harness check between the F-02 rear height sensor connector terminal No. 1 and the C-14 headlamp automatic levelling-ECU connector terminal No. 20.

NOTE: Before the wiring harness check, check the intermediate connectors C-67, D-12 and F-03, and then repair that if necessary.

- Check the power supply lines for short circuit.

Q: Is the check result normal?
YES : Go to Step 8.
NO : Repair the wiring harness.

STEP 8. Check whether the diagnosis code is reset.

Q: Is diagnosis code No. B2514 set?
YES : Go to Step 9.
NO : The trouble can be an intermittent malfunction (Refer to GROUP 00 – How to use Troubleshooting/inspection Service Points – How to cope with Intermittent Malfunctions).

STEP 9. M.U.T.-III data list
Disconnect the front and rear height sensor connector, and check the power supply voltage to the height sensor.

Item No.	Item name	Normal condition
Item 3	HS power supply voltage	5 V

OK: Normal condition is displayed.

Q: Is the check result normal?
YES : Go to Step 10.
NO : Replace the headlamp automatic levelling-ECU.

STEP 10. Rear height sensor check
Check the rear height sensor for the internal failure.

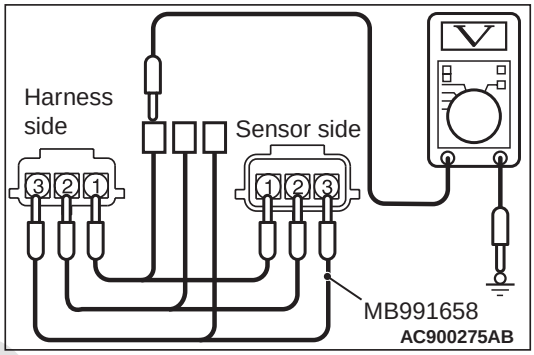

(1) Disconnect the rear height sensor connector and connect the special tool test harness (MB991658) as shown.
(2) Turn the ignition switch to the ON position.
(3) Measure the voltage of sensor connector terminal No. 1.

OK: 5 V

Q: Is the check result normal?
YES : Go to Step 11.
NO : Replace the rear height sensor.

STEP 11. Check whether the diagnosis code is reset.

Q: Is diagnosis code No. B2514 set?
YES : Replace the headlamp automatic levelling-ECU.
NO : The diagnosis is complete.

www.cargeek.ir

www.CarGeek.ir

Code No. B2516 Rear height sensor signal error

⚠ CAUTION

Before replacing the ECU, ensure that the power supply circuit, the earth circuit and the communication circuit are normal.

Connector: C-14 <LHD>

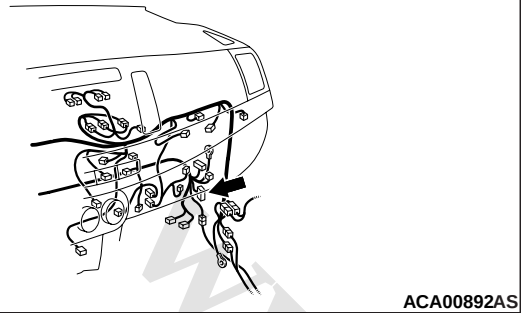

ACA00892AS

Connector: C-14 <RHD>

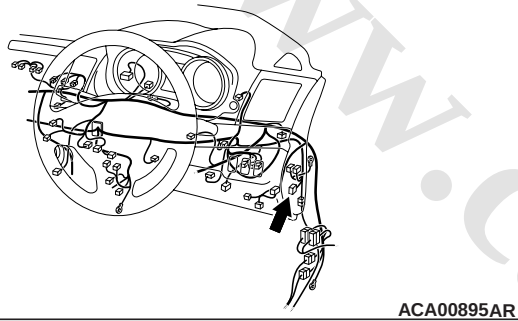

ACA00895AR

Connector: F-02 <LANCER SPORTBACK>

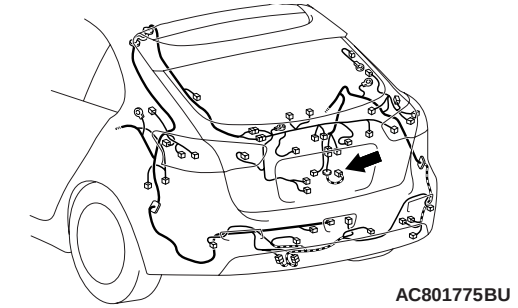

AC801775BU

Connector: F-02 <LANCER>

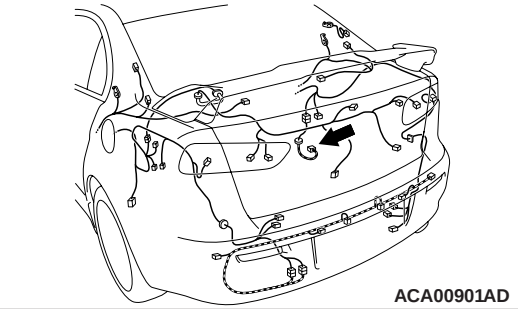

ACA00901AD

DIAGNOSTIC FUNCTION

If a trouble occurs in rear height sensor, headlamp automatic levelling system warnings are displayed on the multi information display and code No. B2516 is stored.

JUDGEMENT CRITERIA

The headlamp automatic levelling-ECU detects the error of the signal voltage from the rear height sensor (less than 0.7 V, or 4.2 V or more) or 1 second or longer continuously.

PROBABLE CAUSES

- Malfunction of the rear height sensor
- Malfunction of the rear height sensor installation
- Malfunction of the headlamp automatic levelling-ECU
- Damaged harness wires and connectors

DIAGNOSIS PROCEDURE

STEP 1. M.U.T.-III diagnosis code

Check if diagnosis code No. B2514 is set.

Q: Is diagnosis code No. B2514 set?

YES : Perform the troubleshooting of the diagnosis code No. B2514.

NO : Go to Step 2.

STEP 2. Rear height sensor installation status check

Check that the rear height sensor is installed properly.

Q: Is the check result normal?

YES : Go to Step 3.

NO : Install the rear height sensor properly.

STEP 3. Connector check: F-02 rear height sensor connector, C-14 headlamp automatic levelling-ECU connector

Q: Is the check result normal?

YES : Go to Step 4.

NO : Repair the defective connector.

STEP 4. Voltage measurement at the F-02 rear height sensor connector.

(1) Disconnect the connector, and measure at the wiring harness-side connector.
(2) Turn the ignition switch to the ON position.
(3) Voltage between the F-02 rear height sensor

www.cargeek.ir

www.CarGeek.ir

terminal No. 1 and the body earth

OK: 5 V

Q: Is the check result normal?
YES : Go to Step 6.
NO : Go to Step 5.

STEP 5. Wiring harness check between the F-02 rear height sensor connector terminal No. 1 and the C-14 headlamp automatic levelling-ECU connector terminal No. 20.

NOTE: Before the wiring harness check, check the intermediate connectors C-67, D-12 and F-03, and repair that if necessary.

- Check the power supply line for open circuit.

Q: Is the check result normal?
YES : Replace the headlamp automatic levelling-ECU
NO : Repair the wiring harness.

STEP 6. Resistance measurement at the F-02 rear height sensor connector.

(1) Disconnect the connector, and measure at the wiring harness side.
(2) Measure the resistance between the F-02 rear height sensor connector terminal No. 3 and the body earth.

OK: Continuity exists (2 Ω or less)

Q: Is the check result normal?
YES : Go to Step 8.
NO : Go to Step 7.

STEP 7. Wiring harness check between the F-02 rear height sensor connector terminal No. 3 and the C-14 headlamp automatic levelling-ECU connector terminal No. 16.

NOTE: Before the wiring harness check, check the intermediate connectors C-31, D-12 and F-03, and repair that if necessary.

- Check the earth line for open circuit.

Q: Is the check result normal?
YES : Replace the headlamp automatic levelling-ECU
NO : Repair the wiring harness.

STEP 8. Wiring harness check between the F-02 rear height sensor connector terminal No. 2 and the C-14 headlamp automatic levelling-ECU connector terminal No. 17.

NOTE: Before the wiring harness check, check the intermediate connectors C-31, D-12 and F-03, and repair that if necessary.

- Check the signal lines for open or short circuit.

Q: Is the check result normal?
YES : Go to Step 9.
NO : Repair the wiring harness.

STEP 9. rear height sensor check

Check that the rear height sensor is normal (Refer to).

Q: Is the check result normal?
YES : Go to Step 10.
NO : Replace the rear height sensor.

STEP 10. M.U.T.-III data list

Check the rear height sensor for the signal voltage.

Item No.	Item name	Normal condition
Item 5	Rear HS signal voltage	0.7 V – 4.1 V

OK: Normal condition is displayed.

Q: Is the check result normal?
YES : The trouble can be an intermittent malfunction (Refer to GROUP 00 – How to use Troubleshooting/inspection Service Points – How to cope with Intermittent Malfunctions).
NO : Replace the headlamp automatic levelling-ECU.

www.cargeek.ir

www.CarGeek.ir

TROUBLE SYMPTOM CHART

M1540301200300

⚠ CAUTION

Before or after the troubleshooting, check the operation of the headlamp automatic levelling system. Refer to .

Trouble symptom	Inspection Procedure No.	Reference page
Malfunction of the power supply circuit system of headlamp automatic levelling-ECU	1	
The both headlamp automatic levelling systems (right and left) do not work normally.	2	
One of the automatic levellings does not work.	3	

SYMPTOM PROCEDURES

Inspection Procedure 1: Malfunction of the power supply circuit system of headlamp automatic levelling-ECU

⚠ CAUTION

Whenever the ECU is replaced, ensure that the power supply circuit, the earth circuit and the communication circuit are normal.

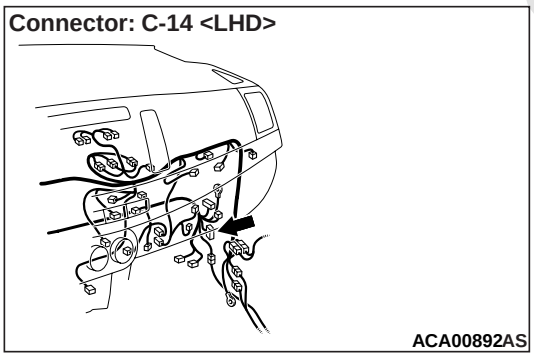

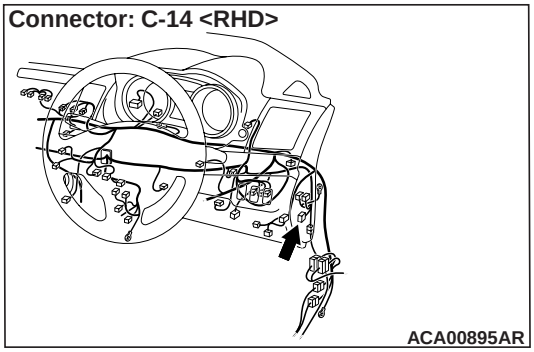

COMMENTS ON TROUBLE SYMPTOM

If the headlamp automatic levelling system or AFS functions do not work at all, the headlamp automatic levelling-ECU power supply system, earth system, or headlamp automatic levelling-ECU may have a problem.

PROBABLE CAUSES

- Malfunction of the headlamp automatic levelling-ECU
- Damaged harness wires and connectors

DIAGNOSIS PROCEDURE

STEP 1. Connector check: C-14 headlamp automatic levelling-ECU connector

Q: Is the check result normal?

YES : Go to Step 2.
NO : Repair the defective connector.

STEP 2. Resistance measurement at the C-14 headlamp automatic levelling-ECU connector

(1) Disconnect the connector, and measure at the wiring harness side.
(2) Measure the resistance between the C-14 headlamp automatic levelling-ECU connector terminal No. 2 and the body earth.

OK: Continuity exists (2 Ω or less)

Q: Is the check result normal?

YES : Go to Step 4.
NO : Go to Step 3.

STEP 3. Wiring harness check from C-14 headlamp automatic levelling-ECU connector terminal No. 2 to body earth

Check the earth wires for open circuit.

Q: Is the check result normal?

www.cargeek.ir

www.CarGeek.ir

YES : The trouble can be an intermittent malfunction (Refer to GROUP 00 – How to use Troubleshooting/inspection Service Points – How to Cope with Intermittent Malfunction).
NO : Repair the wiring harness.

STEP 4. Voltage measurement at the C-14 headlamp automatic levelling-ECU connector

(1) Disconnect the connector, and measure at the wiring harness side.
(2) Turn the ignition switch to the ON position.
(3) Measure the voltage between the C-14 headlamp automatic levelling-ECU connector terminal No. 12 and the body earth.

OK: System voltage

Q: Is the check result normal?
YES : Go to Step 7.
NO : Go to Step 5.

STEP 5. M.U.T.-III data list

Check the ETACS-ECU service data.

- Turn the ignition switch to the ON position.

Item No.	Item name	Normal condition
Item 254	IG voltage	System voltage

OK: Normal conditions is displayed.

Q: Is the check result normal?
YES : Go to Step 6.
NO : Troubleshoot the ETACS-ECU. Refer to Inspection Procedure 2 "The ignition switch (IG1) signal is not received" .

STEP 6. Wiring harness check between the C-14 headlamp automatic levelling-ECU connector terminal No. 12 and the fusible link (34) <except 1800-diesel> or (44) <1800-diesel>

NOTE: Prior to the wiring harness inspection, check ETACS-ECU connectors C-309, C-317, joint connector C-150 and intermediate connector C-128, and repair if necessary.

Q: Is the check result normal?
YES : The trouble can be an intermittent malfunction (Refer to GROUP 00 – How to use Troubleshooting/inspection Service Points – How to Cope with Intermittent Malfunction).
NO : Repair the wiring harness.

STEP 7. Retest the system

Check that the headlamp automatic levelling system or AFS functions works normally.

Q: Is the check result normal?
YES : The trouble can be an intermittent malfunction (Refer to GROUP 00 – How to use Troubleshooting/inspection Service Points – How to Cope with Intermittent Malfunction).
NO : Replace the headlamp automatic levelling-ECU.

Inspection Procedure 2: The both headlamp automatic levelling systems (right and left) do not work normally.

⚠ CAUTION

Before replacing the ECU, ensure that the power supply circuit, the earth circuit and the communication circuit are normal.

COMMENTS ON TROUBLE SYMPTOM

If the both headlamp automatic levelling systems (right and left) do not work normally, automatic levelling-ECU initialization, each rear height sensor, connector assembly or automatic levelling-ECU may be defective.

PROBABLE CAUSES

- Malfunction of headlamp automatic levelling-ECU initialization
- Rear height sensor improperly installed
- Malfunction of rear height sensor
- Malfunction of headlamp automatic levelling-ECU
- Connector assembly improperly installed
- Damaged connectors

www.cargeek.ir

www.CarGeek.ir

DIAGNOSIS PROCEDURE

STEP 1. Connector assembly installation status check

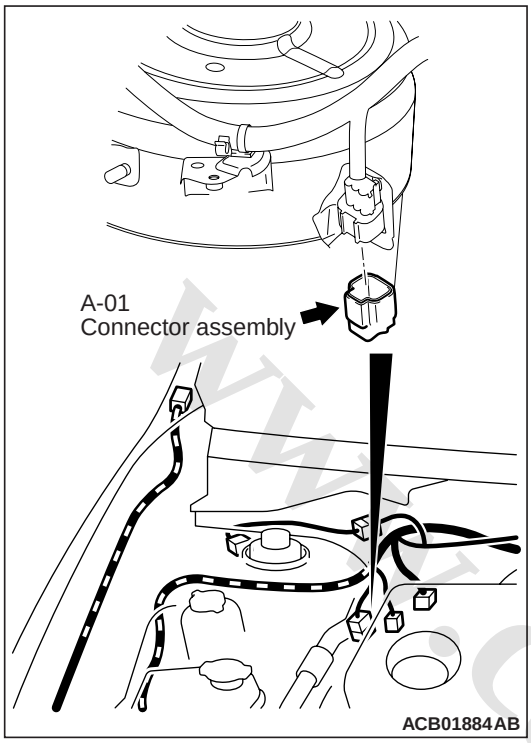

Check that the connector assembly is installed properly.

Q: Is the check result normal?
YES : Go to Step 2.
NO : Install the connector assembly properly.

STEP 2. Connector check: A-01 connector assembly connector, C-14 headlamp automatic levelling-ECU connector

Q: Is the check result normal?
YES : Go to Step 3.
NO : Repair the defective connector.

STEP 3. Rear height sensor installation status check

Check that the rear height sensor is installed properly.

Q: Is the check result normal?
YES : Go to Step 4.
NO : Install the rear height sensor properly.

STEP 4. Rear height sensor check

Check that the rear height sensor is normal (Refer to).

Q: Is the check result normal?
YES : Go to Step 5.
NO : Replace the rear height sensor.

STEP 5. Retest the system

Check that the automatic levelling operates normally.

Q: Is the check result normal?
YES : The trouble can be an intermittent malfunction (Refer to GROUP 00 – How to use Troubleshooting/inspection Service Points – How to Cope with Intermittent Malfunction).
NO : Replace the headlamp automatic levelling-ECU.

Inspection Procedure 3: One of the automatic levellings does not work.

⚠ CAUTION
Before replacing the ECU, ensure that the power supply circuit, the earth circuit and the communication circuit are normal.

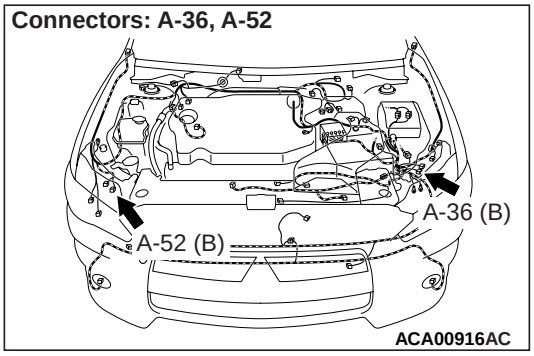

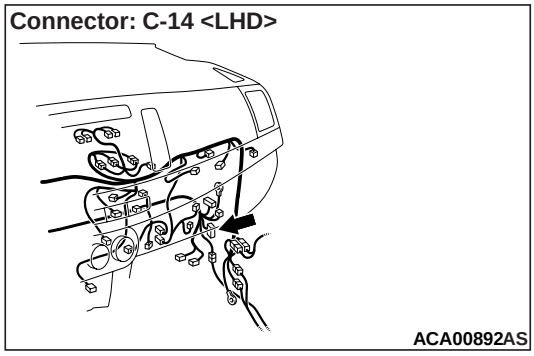

www.cargeek.ir

www.CarGeek.ir

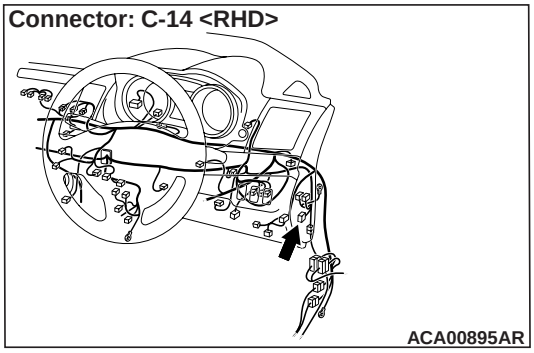

COMMENTS ON TROUBLE SYMPTOM

When one of the automatic levellings does not work, the wiring harness and connector(s) between the headlamp automatic levelling-ECU and the headlamp levelling unit, or the headlamp assembly (headlamp levelling unit) may have a problem.

PROBABLE CAUSES

- Malfunction of headlamp assembly (headlamp levelling unit)
- Malfunction of headlamp automatic levelling-ECU
- Damaged harness wires and connectors

DIAGNOSIS PROCEDURE

STEP 1. Headlamp levelling unit check

Perform a levelling motor drive test of the headlamp levelling unit to check that the motor is driven. Refer to .

Q: Is the check result normal?

YES : The trouble can be an intermittent malfunction (Refer to GROUP 00 – How to Use Troubleshooting/Inspection Service Points – How to Cope with Intermittent Malfunctions).

NO (The left levelling motor is not driven.) : Go to Step 2.

NO (The right levelling motor is not driven.) : Go to Step 6.

STEP 2. Connector check: C-14 Headlamp automatic levelling-ECU connector, A-36 headlamp assembly (LH) connector

Q: Is the check result normal?

YES : Go to Step 3.

NO : Repair the defective connector.

STEP 3. Wiring harness check between the C-14 headlamp automatic levelling-ECU connector terminal No. 7/14/26 and the A-36 headlamp assembly (LH) connector terminal No. 3/6/2

- Check the power supply lines, earth lines and signal lines for open circuit.

Q: Is the check result normal?

YES : Go to Step 4.

NO : Repair the wiring harness.

STEP 4. M.U.T.-III data list

(1) Disconnect the headlamp assembly (LH) and (RH) connector.

(2) Turn the ignition switch from "LOCK" (OFF) position to "ON" position.

Item No.	Item name	Normal condition
Item 68	A/L actuator output voltage	Indicates the voltage value of system voltage within the range of 20 to 80%.

OK: Normal condition is displayed.

Q: Is the check result normal?

YES : Go to Step 5.

NO : Replace the headlamp automatic levelling-ECU.

STEP 5. Check the headlamp assembly (LH).

Check the headlamp assembly (LH) for internal failure.

(1) Disconnect the headlamp assembly (RH) connector.

(2) Turn the ignition switch from "LOCK" (OFF) position to "ON" position.

(3) Perform the drive test using the M.U.T.-III. Refer to .

Q: Is the check result normal?

YES : Go to Step 10.

NO : Replace the headlamp assembly (LH).

STEP 6. Connector check: C-14 Headlamp automatic levelling-ECU connector, A-52 headlamp assembly (RH) connector

Q: Is the check result normal?

YES : Go to Step 7.

NO : Repair the defective connector.

www.cargeek.ir

www.CarGeek.ir

STEP 7. Wiring harness check between the C-14 headlamp automatic levelling-ECU connector terminal No. 6/13/25 and the A-52 headlamp assembly (RH) connector terminal No. 3/6/2

- Check the power supply lines, earth lines and signal lines for open circuit.

Q: Is the check result normal?
YES : Go to Step 8.
NO : Repair the wiring harness.

STEP 8. M.U.T.-III data list

(1) Disconnect the headlamp assembly (LH) and (RH) connector.
(2) Turn the ignition switch from "LOCK" (OFF) position to "ON" position.

Item No.	Item name	Normal condition
Item 68	A/L actuator output voltage	Indicates the voltage value of system voltage within the range of 20 to 80%.

OK: Normal condition is displayed.

Q: Is the check result normal?
YES : Go to Step 9.
NO : Replace the headlamp automatic levelling-ECU.

STEP 9. Check the headlamp assembly (RH).

Check the headlamp assembly (RH) for internal failure.

(1) Disconnect the headlamp assembly (LH) connector.
(2) Turn the ignition switch from "LOCK" (OFF) position to "ON" position.
(3) Perform the drive test using the M.U.T.-III. Refer to .

Q: Is the check result normal?
YES : Go to Step 10.
NO : Replace the headlamp assembly (RH).

STEP 10. Retest the system

Check that the automatic levelling of the right headlamp operates normally.

Q: Is the check result normal?
YES : The trouble can be an intermittent malfunction (Refer to GROUP 00 – How to Use Troubleshooting/Inspection Service Points – How to Cope with Intermittent Malfunction).
NO : Replace the headlamp automatic levelling-ECU.

DATA LIST REFERENCE TABLE

M1540305200272

Item No.	M.U.T.-III display	Condition	Normal condition
1	AFS/ACL:AFS OFF SW	–	OFF (Not present)
2	ECU power supply voltage	Ignition switch: ON position	System voltage
3	A/L:HS power supply voltage	Ignition switch: ON position	4.2 – 5.7 V
5	A/L:Rear HS signal voltage	Ignition switch: ON position	0.7 – 4.1 V
7	A/L:Rear HS initial position	Ignition switch: ON position	4.2 – 5.7 V
8	A/L:HS initialization status	The headlamp automatic levelling-ECU initialisation is not implemented.	Not run
		The headlamp automatic levelling-ECU initialisation is completed.	Completed
9	AFS/ACL:Vehicle speed(CAN input)	Perform a test run of the vehicle.	The values displayed on the speedometer and M.U.T.-III are almost the same.

www.cargeek.ir

www.CarGeek.ir

Item No.	M.U.T.-III display	Condition	Normal condition
10	AFS/ACL:SAS(CAN input)	Turn the steering wheel anticlockwise.	Displays nearly the same value as the steering wheel operation angle (0° to 720°).
		Turn the steering wheel clockwise.	Displays nearly the same value as the steering wheel operation angle (0° to –720°).
11	A/L:Hazard lamp SW (CAN input)	Hazard warning lamp switch: OFF	OFF
		Hazard warning lamp switch: ON	ON
12	AFS/ACL:SAS status (CAN input)	When the steering wheel neutral position is learned by the steering wheel sensor.	Normal
		When the steering wheel neutral position is not learned by the steering wheel sensor.	No initialize
		When the steering wheel sensor is defective.	Fail
			No ini. and Fail
22	A/L:Headlamp switch (Dimmer)	Lighting switch: High beam position	OFF
		Other than above	ON
24	AFS/ACL:Reverse gear (CAN input)	When the shift lever or the selector lever is in the position other than the reverse position.	OFF
		When the shift lever or the selector lever is in the reverse position.	ON
25	Headlamp SW position(CAN input)	When the column switch (lighting switch) is in the OFF position.	OFF
		When the column switch (lighting switch) is in the position lamp position.	Position lamp
		When the column switch (lighting switch) is in the headlamp position.	ON
		When the column switch (lighting switch) is in the auto lamp position.	AUTO
26	AFS/ACL:Turn SW LH(CAN input)	When the turn-signal lamp switch (LH) is in the OFF position.	OFF
		When the turn-signal lamp switch (LH) is in the ON position.	ON
27	AFS/ACL:Turn SW RH(CAN input)	When the turn-signal lamp switch (RH) is in the OFF position.	OFF
		When the turn-signal lamp switch (RH) is in the ON position.	ON
28	Head lamp LO (CAN input)	When the low-beam headlamps are OFF.	OFF
		When the low-beam headlamps are ON.	ON

www.cargeek.ir

www.CarGeek.ir

Item No.	M.U.T.-III display	Condition	Normal condition
29	AFS/ACL:Head lamp HI (CAN input	When the high-beam headlamps are OFF.	OFF
		When the high-beam headlamps are ON.	ON
30	A/L:H/L levelling system	–	Type 1
31	A/L:H/L levelling type	–	Static type (CAN)
32	AFS/ACL:AFS/ACL type (CAN input)	–	Fix bending lamp
33	AFS/ACL:Parking brake SW(CAN in)	When the parking brake lever is released. (parking brake switch: OFF)	OFF
		When the parking brake lever is pulled up. (parking brake switch: ON)	ON
34	AFS/ACL:AFS OFF SW (CAN output)	–	OFF (Not present)
35	AFS/ACL:Indicator (CAN output)	When the AFS warning is not displayed.	OFF
		When the AFS warning is displayed.	ON
50	AFS/ACL:Bending lamp LH(CAN out)	When the bending lamp (LH) is OFF.	OFF
		When the bending lamp (LH) is ON.	ON
51	AFS/ACL:Bending lamp RH(CAN out)	When the bending lamp (RH) is OFF.	OFF
		When the bending lamp (RH) is ON.	ON
52	A/L:Fail indicator (CAN output)	When the headlamp automatic levelling warning is not displayed.	OFF
		When the headlamp automatic levelling warning is displayed.	ON
56	A/L:Actuator output fail flag	When the output voltage to the headlamp automatic levelling motor is normal.	OFF
		When the output voltage to the headlamp automatic levelling motor is abnormal.	ON
57	A/L:HS power fail flag	When the output voltage to the height sensor is normal.	OFF
		When the output voltage to the height sensor is abnormal.	ON
59	A/L:Rear HS signal fail flag	When the signal voltage from the rear height sensor is normal.	OFF
		When the signal voltage from the rear height sensor is abnormal.	ON
67	A/L:Actuator line voltage	Ignition switch: ON position	System voltage
68	A/L:Actuator output voltage	Ignition switch: ON position	20% to 80% of system voltage
69	A/L:Indicating voltage ratio	Ignition switch: ON position	0 – 100 %

ACTUATOR TEST REFERENCE TABLE

M1540305300105

Item No.	Item name	Test item	Driven content
5	A/L:Actuator	Headlamp automatic levelling motor	The headlamp automatic levelling motor activates.

www.cargeek.ir

www.CarGeek.ir

HEADLAMP AUTOMATIC LEVELLING-ECU TERMINAL VOLTAGE

M1540301900677

Connector No. C-14

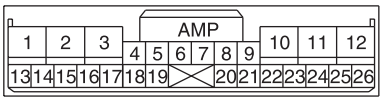

AC900372 AI

Terminal No.	Check items	Check condition		Normal condition
1	Bending lamp (RH) input	Headlamp switch: ON		System voltage
		Headlamp switch: OFF		1 V or less
2	Earth	Always		1 V or less
3	Bending lamp (LH) input	Headlamp switch: ON		System voltage
		Headlamp switch: OFF		1 V or less
4, 5	–	–		–
6	Headlamp levelling unit (RH) earth	Always		1 V or less
7	Headlamp levelling unit (LH) earth	Always		1 V or less
8, 9	–	–		–
10	Headlamp relay (LO) ON signal (LH)	Headlamp: ON		System voltage
11	Headlamp relay (LO) ON signal (RH)	Headlamp: ON		System voltage
12	ECU power supply (Ignition switch: IG1)	Ignition switch: ON		System voltage
		Ignition switch: OFF		1 V or less
13	Output to the headlamp levelling unit (RH)	Ignition switch: ON	When the levelling motor is stopped	1 V or less
			When the levelling motor is operating	16% to 84% of system voltage
14	Output to the headlamp levelling unit (LH)	Ignition switch: ON	When the levelling motor is stopped	1 V or less
			When the levelling motor is operating	16% to 84% of system voltage
15	–	–		–
16	Rear height sensor earth	Always		1 V or less
17	Input from the rear height sensor	Ignition switch: ON		0.5 to 4.5 V
18, 19	–	–		–
20	Rear height sensor power supply	Ignition switch: ON		5 V
21	–	Ignition switch: ON		5 V
22	CAN_L	–		–
23	CAN_H	–		–

www.cargeek.ir

www.CarGeek.ir

Terminal No.	Check items	Check condition	Normal condition
24	–	–	–
25	Headlamp levelling unit (RH) power supply	Ignition switch: ON	System voltage
26	Headlamp levelling unit (LH) power supply	Ignition switch: ON	System voltage

ON-VEHICLE SERVICE

INITIALISATION OF HEADLAMP AUTOMATIC LEVELLING-ECU

M1540303300176

After the operation below is completed, initialise the headlamp automatic levelling-ECU.

- The headlamp automatic levelling-ECU is replaced.
- The rear height sensor is replaced or removed/installed.
- The suspension related components are replaced or removed/installed.

INITIALISATION PROCEDURE

Before the initialisation operation, check that the diagnosis code No. B2511, B2512, B2514, B2516 is not set to the headlamp automatic levelling-ECU. If it is set, perform the troubleshooting before the initialisation. (Refer to .)

1. Park the vehicle on a level surface.
2. If the fuel tank is not filled up, put weight in the luggage compartment to make up for the fuel shortage so that the weight will become 90% of full-state weight or heavier. (0.8 kg per litter)
3. There should be no other load in the vehicle other than driver or substituted weight of approximately 75 kg placed in driver's position.

   NOTE: Remove any load from the vehicle (Vehicle tool kit and spare wheel should not be removed).
4. Connect the M.U.T.-III to the diagnosis connector (For how to connect the M.U.T.-III, refer to GROUP 00 – Diagnosis function).
5. Turn the ignition switch to "ON" position. (Do not start up the engine.)
6. Select the M.U.T.-III screen menu as follows.
   (1) Select "AFS" displayed on the "System selection" screen.
   (2) Select "Special function."
   (3) Select "HS initial position clear."
7. The headlamp automatic levelling warning is displayed on the multi information display in the combination meter.
8. Select the M.U.T.-III screen menu as follows.
   (1) Select "AFS" displayed on the "System selection" screen.
   (2) Select "Special function."
   (3) Select "HS initial position learning."
9. The headlamp automatic levelling warning on the multi information display in the combination meter is not displayed.
10. The headlamp automatic levelling-ECU initialisation is completed.
11. Perform the headlamp aiming (Refer to Headlamp Aiming .)

OPERATION CHECK OF HEADLAMP AUTOMATIC LEVELLING

M1540303400010

With this inspection, it is simply checked that the headlamp automatic levelling motor incorporated in the headlamp assembly moves in accordance with the vehicle posture.

INSPECTION PROCEDURE

1. Park the vehicle on a level surface.
2. Turn the ignition switch to "ON" position. (Do not start up the engine.)
3. At the front or rear jack up point, raise the front wheels or rear wheels off the earth.
4. Turn ON the headlamp switch.
5. When the front wheels are raised, the upward headlamp beam is controlled with the control value applicable to the present vehicle posture, and the headlamp beam moves downward.
6. When the rear wheels are raised, the downward headlamp beam is controlled with the control value applicable to the present vehicle posture, and the headlamp beam moves upward.

www.cargeek.ir

www.CarGeek.ir

HEADLAMP AUTOMATIC LEVELLING MOTOR DRIVE TEST

M1540302100306

With this inspection, the headlamp automatic levelling motor incorporated in the headlamp assembly is forcibly activated and checking the motor for normal operation is possible.

DRIVE TEST PROCEDURE (WHEN THE M.U.T.-III IS USED)

1. Connect the M.U.T.-III to the diagnosis connector (For how to connect the M.U.T.-III, refer to GROUP 00 – Diagnosis function).
2. Turn the ignition switch to "ON" position. (Do not start up the engine.)
3. Turn ON the headlamp switch.
4. Select the M.U.T.-III screen menu as follows.
   (1) Select "AFS" displayed on the "System selection" screen.
   (2) Select "Actuator test."
   (3) Select "Levelling actuator."
   (4) The headlamp beam moves downward if "20%" is set for the "Vehicle select" and upward if "80%" is set for the "Vehicle select".
5. The drive test is completed.

DRIVE TEST PROCEDURE (WHEN THE M.U.T.-III IS NOT USED)

1. Turn the hazard warning lamp switch to the ON position.
2. Within 10 seconds after turning the ignition switch from OFF to the ON position (do not start up the engine), turn the headlamp switch from OFF to ON 5 times repeatedly. When the operation is successfully completed, the headlamp automatic levelling warning is displayed on the multi information display in the combination meter. If not displayed, turn the ignition switch OFF and perform the operation again.
3. Within 30 seconds after the headlamp automatic levelling warning is displayed, turn the hazard warning lamp switch OFF.
4. The headlamp beam moves downward for approximately 3 seconds and upward for 3 seconds. Then the beam returns to the position applicable to the present vehicle posture.
5. The drive test is completed. (The headlamp automatic levelling warning is not displayed.)

HEADLAMP AUTOMATIC LEVELLING-ECU REMOVAL AND INSTALLATION

M1540302300236

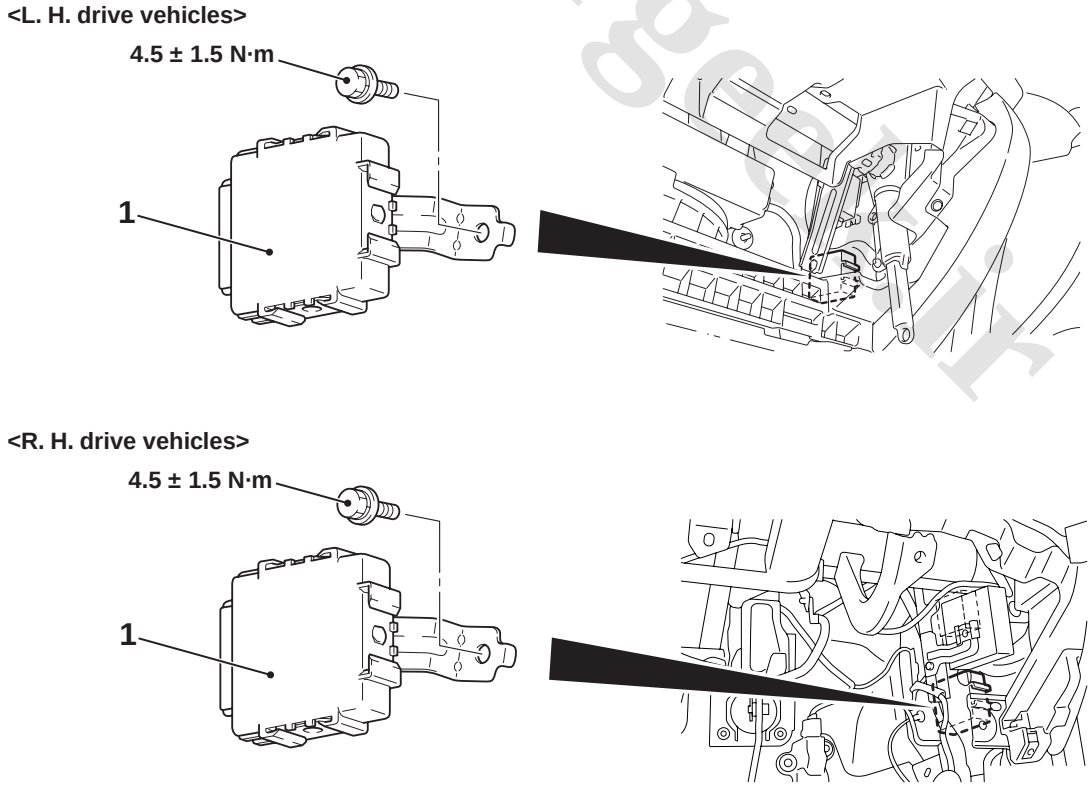

www.cargeek.ir

www.CarGeek.ir

Removal Steps

- Glove box (Refer to GROUP 52A – Glove Box) <L. H. drive vehicles> or Instrument lower panel (Refer to GROUP 52A – Instrument Lower Panel) <R. H. drive vehicles>

1. Headlamp automatic levelling-ECU

HEIGHT SENSOR REMOVAL AND INSTALLATION

M1540302700416

<LANCER>

Post-installation operation

- Initialisation of headlamp automatic levelling-ECU (Refer to .)
- Check the beam direction of the headlamp (Refer to Headlamp Aiming).

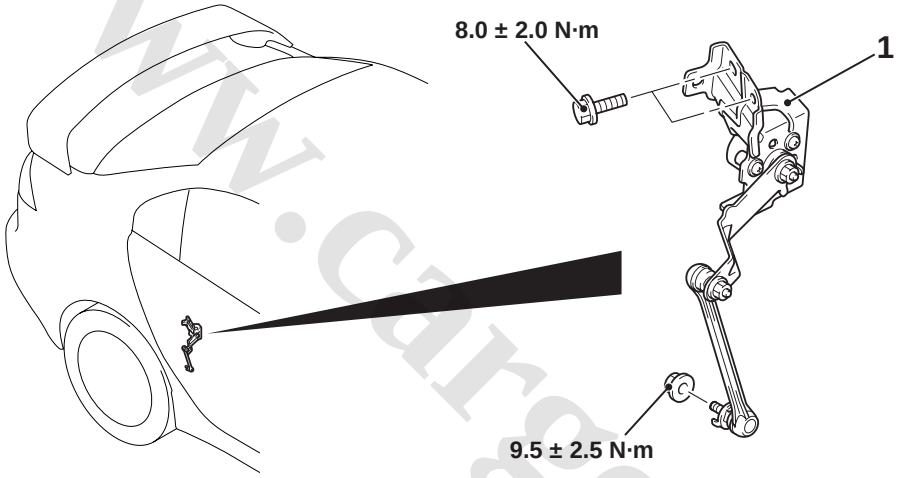

ACB01896AB

Removal

1. Rear height sensor

www.cargeek.ir

www.CarGeek.ir

<LANCER SPORTBACK>

Post-installation operation
- Initialisation of headlamp automatic levelling-ECU (Refer to .)
- Check the beam direction of the headlamp (Refer to Headlamp Aiming).

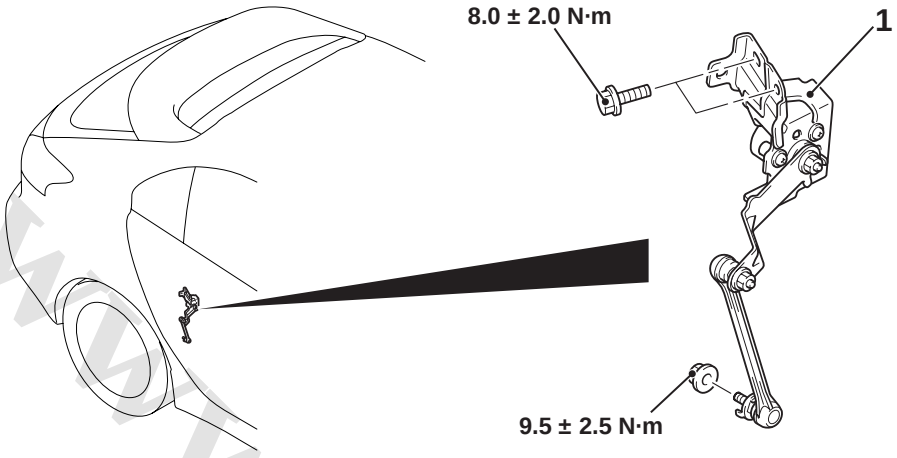

ACB01897AB

Removal

1. Rear height sensor

INSPECTION

HEIGHT SENSOR CHECK

M1540302600312

REAR HEIGHT SENSOR CHECK

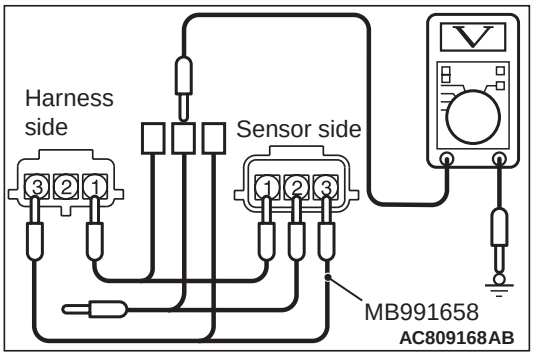

1. Disconnect the sensor connector and connect the special tool test harness (MB991658) as shown.
2. Turn the ignition switch to the ON position.
3. Measure the voltage of sensor connector terminal No. 2.

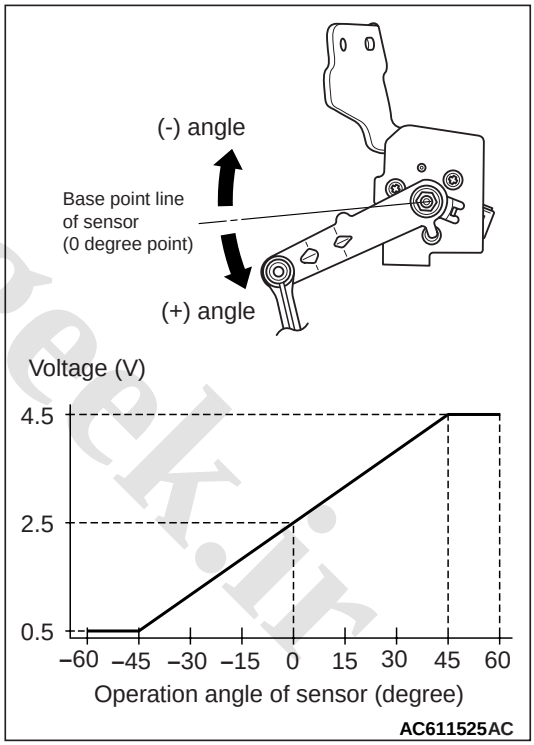

4. Check that voltages show the values described in the graph according to the sensor operation angle.

www.cargeek.ir

www.CarGeek.ir

REAR COMBINATION LAMP

SPECIAL TOOLS

M1541400100269

www.cargeek.ir

www.cargeek.ir

www.CarGeek.ir

Tool	Number	Name	Use
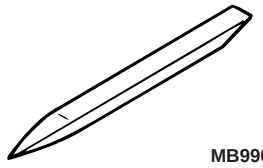 MB990784	MB990784	Ornament remover	Removal of rear combination lamp assembly and tail lamp assembly

www.cargeek.ir

www.cargeek.ir

www.CarGeek.ir

Tool	Number	Name	Use
a 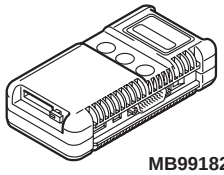 MB991824 b 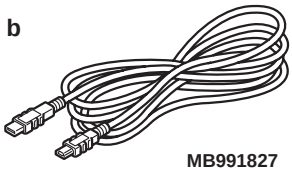 MB991827 c 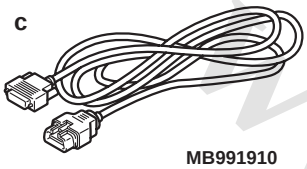 MB991910 d 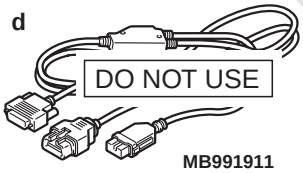 DO NOT USE MB991911 e 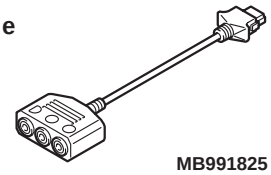 MB991825 f 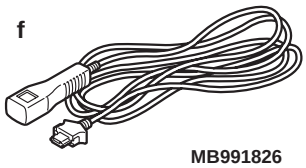 MB991826 MB991955	MB991955 a. MB991824 b. MB991827 c. MB991910 d. MB991911 e. MB991825 f. MB991826	M.U.T.-III sub-assembly a. Vehicle Communication Interface (V.C.I.) b. M.U.T.-III USB cable c. M.U.T.-III main harness A (Vehicles with CAN communication system) d. M.U.T.-III main harness B (Vehicles without CAN communication system) e. M.U.T.-III measure adapter f. M.U.T.-III trigger harness	⚠ CAUTION **For vehicles with CAN communication, use M.U.T.-III main harness A to send simulated vehicle speed. If you connect M.U.T.-III main harness B instead, the CAN communication does not function correctly.** Diagnosis code, service data and actuator test check.
a 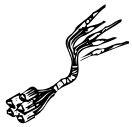 b 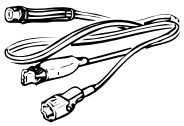 c 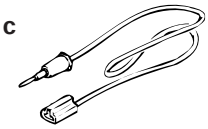 d DO NOT USE MB991223	MB991223 a. MB991219 b. MB991220 c. MB991221 d. MB991222	Harness set a. Check harness b. LED harness c. LED harness adapter d. Probe	Continuity check and voltage measurement at harness wire or connector a. For checking connector pin contact pressure b. For checking power supply circuit c. For checking power supply circuit d. For connecting a locally sourced tester

www.cargeek.ir

www.CarGeek.ir

Tool	Number	Name	Use
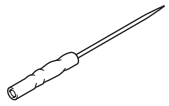 MB992006	MB992006	Extra fine probe	Continuity check and voltage measurement at harness wire or connector

TROUBLESHOOTING

STANDARD FLOW OF DIAGNOSTIC TROUBLESHOOTING

M1541402500133

Refer to GROUP 00 – Contents of troubleshooting .

DIAGNOSIS FUNCTION

M1541400900083

HOW TO READ DIAGNOSIS CODE

Refer to GROUP 00 – Diagnosis function .

HOW TO ERASE DIAGNOSIS CODE

Refer to GROUP 00 – Diagnosis function .

DIAGNOSIS CODE CHART

M1541400200192

⚠ CAUTION

On troubleshooting, if the ignition switch is turned ON while disconnecting connector(s), diagnosis code(s) associated with other system may be set. On completion, confirm all systems for diagnosis code(s). If diagnosis code(s) are set, erase them all.

Diagnosis code No.	Diagnostic item	Reference page
B16A7	Tail lamp (RH) circuit short <Short circuit in the position lamp (RH) circuit or the tail lamp (RH) circuit>	
B16A8	Tail lamp (LH) circuit short <Short circuit in the position lamp (LH) circuit, tail lamp (LH) circuit or the licence plate lamp circuit>	

DIAGNOSIS CODE PROCEDURES

Code No.B16A7 Tail lamp (RH) circuit short <Short circuit in the position lamp (RH) circuit or the tail lamp (RH) circuit>

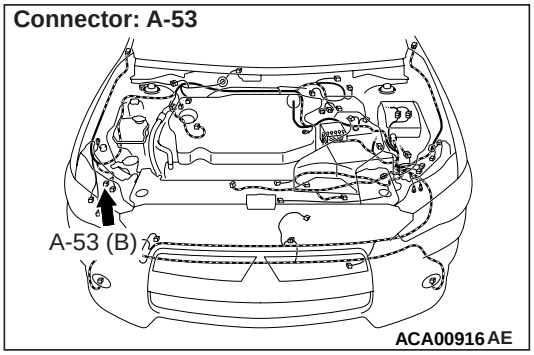

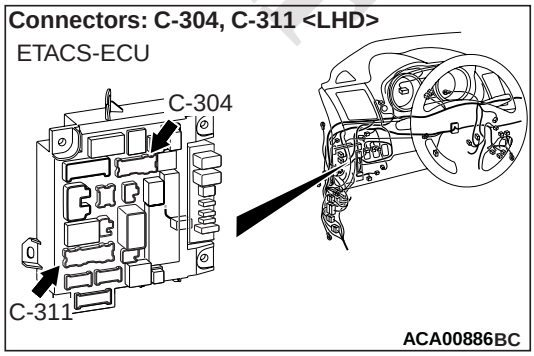

www.cargeek.ir

www.CarGeek.ir

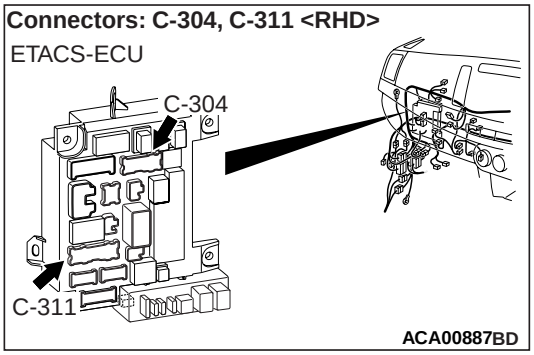

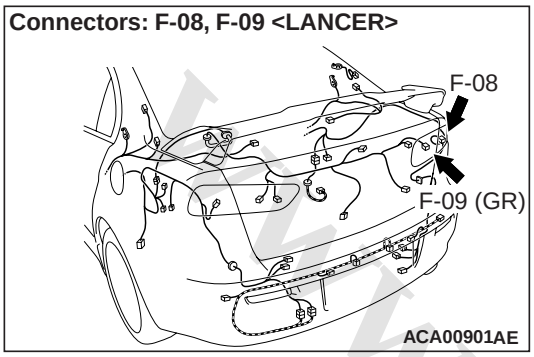

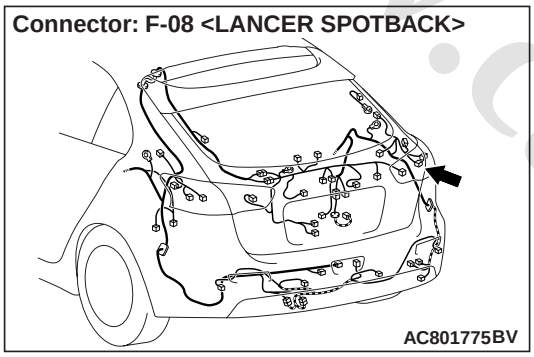

DIAGNOSTIC FUNCTION

When a short circuit is detected in the position lamp circuit or the tail lamp circuit, the ETACS-ECU sets the diagnosis code No. B16A7.

JUDGEMENT CRITERIA

The problem detection of tail lamp is made based on the digital feed back signal (input signal to ETACS-ECU) which operates the tail lamp. When the ignition switch is ON, the ETACS-ECU determines the tail lamp circuit state from the load placed on the line. After 100 ms has elapsed since the start of the check, the ETACS-ECU performs a sampling with each 10 ms. If an abnormality is detected, it increases the counter by 2, and when no abnormality is detected, it decreases the counter by 1. Once the counter reaches "10," the ETACS-ECU sets the diagnosis code No. B16A7 if no load is detected.

PROBABLE CAUSES

- Malfunction of bulbs
- Damaged harness wires and connectors
- Malfunction of the ETACS-ECU

DIAGNOSIS PROCEDURE

STEP 1. Bulb check

Check the bulb(s) of the lamp that does not illuminate.

Q: Is the check result normal?
YES : Go to Step 2.
NO : Replace the bulb(s) of the lamp that does not illuminate.

STEP 2. Connector check: A-53 headlamp assembly (RH) connector, F-08 rear combination lamp (RH) connector and F-09 tail lamp (RH) <LANCER> connector

Q: Is the check result normal?
YES : Go to Step 3.
NO : Repair the defective connector.

STEP 3. Resistance measurement at the A-53 headlamp assembly (RH) connector, F-08 rear combination lamp (RH) connector and F-09 tail lamp (RH) <LANCER> connector

(1) Disconnect the connector, and measure at the wiring harness side.
(2) Measure the resistance between the connector terminal of lamp which does not illuminate and the body earth.
- Measure the resistance between the A-53 headlamp assembly (RH) connector terminal No. 6 and the body earth.
- Measure the resistance between the F-08 rear combination lamp (RH) connector terminal No. 1 and the body earth.
- Measure the resistance between the F-09 tail lamp (RH) connector terminal No. 1 and the body earth. <LANCER>

OK: Continuity exists (2 Ω or less)

Q: Is the check result normal?
YES : Go to Step 5.
NO : Go to Step 4.

www.cargeek.ir

www.CarGeek.ir

STEP 4. Wiring harness check between the A-53 headlamp assembly (RH) connector terminal No. 6, F-08 rear combination lamp (RH) connector terminal No. 1 or F-09 tail lamp (RH) <LANCER> connector terminal No. 1 and the body earth

NOTE: Prior to the wiring harness inspection, check intermediate connector F-28, and repair if necessary.

- Check the earth wires for open circuit.

Q: Is the check result normal?
YES : Go to Step 7.
NO : Repair the wiring harness.

STEP 5. Connector check: C-304 and C-311 ETACS-ECU connector

Q: Is the check result normal?
YES : Go to Step 6.
NO : Repair the defective connector.

STEP 6. Wiring harness check between the A-53 headlamp assembly (RH) connector terminal No. 4, F-08 rear combination lamp (RH) connector terminal No. 3 or F-09 tail lamp (RH) <LANCER> connector terminal No. 2 and C-304 ETACS-ECU connector terminal No. 7 or C-311 ETACS-ECU connector terminal No. 13

NOTE: Prior to the wiring harness inspection, check intermediate connector D-12, D-16 and F-28, and repair if necessary.

- Check the power supply lines for open circuit and short circuit.

Q: Is the check result normal?
YES : Go to Step 7.
NO : Repair the wiring harness.

STEP 7. Check whether the diagnosis code is reset.

(1) Erase the diagnosis code.
(2) Turn the ignition switch from "LOCK" (OFF) position to "ON" position.
(3) Check if diagnosis code is set.

Q: Is the diagnosis code set?
YES : Replace the ETACS-ECU.
NO : The diagnosis is complete.

Code No.B16A8 Tail lamp (LH) circuit short <Short circuit in the position lamp (LH) circuit, tail lamp (LH) circuit or the licence plate lamp circuit>

Connector: A-35

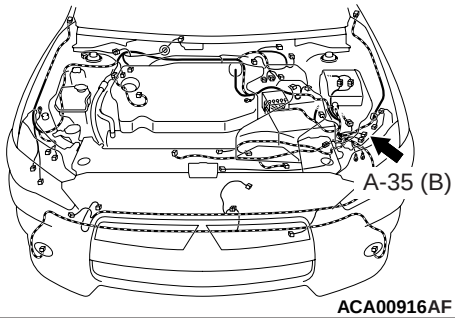

ACA00916AF

Connectors: C-304, C-311 <RHD>

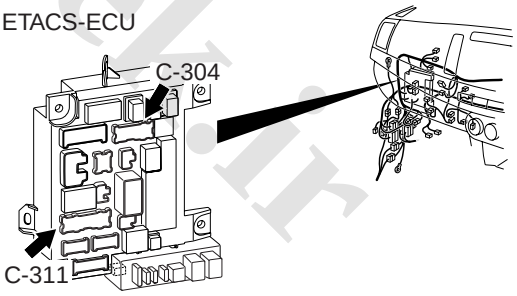

ACA00887BD

Connectors: C-304, C-311 <LHD>

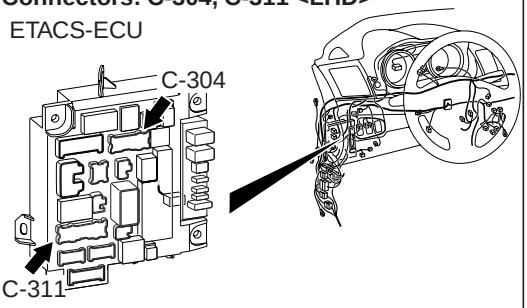

ACA00886BC

Connectors: F-13, F-15, F-22, F-23 <LANCER>

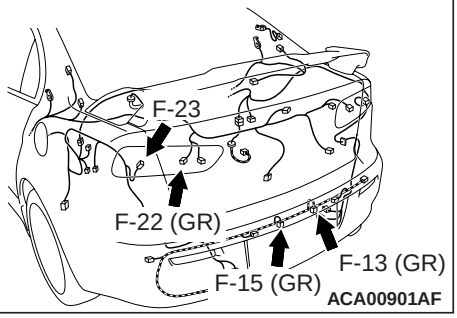

ACA00901AF

www.cargeek.ir

www.CarGeek.ir

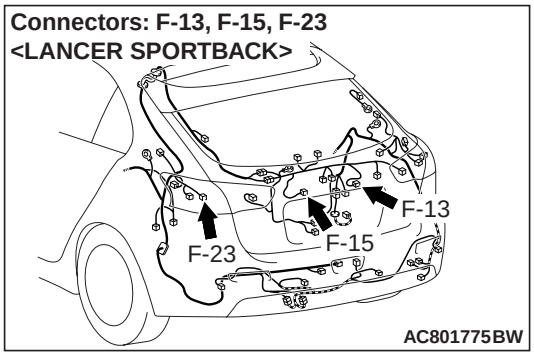

DIAGNOSTIC FUNCTION

When a short circuit is detected in the position lamp circuit, the tail lamp circuit or the licence plate lamp circuit, the ETACS-ECU sets the diagnosis code No. B16A8.

JUDGEMENT CRITERIA

The problem detection of tail lamp is made based on the digital feed back signal (input signal to ETACS-ECU) which operates the tail lamp. When the ignition switch is ON, the ETACS-ECU determines the tail lamp circuit state from the load placed on the line. After 100 ms has elapsed since the start of the check, the ETACS-ECU performs a sampling with each 10 ms. If an abnormality is detected, it increases the counter by 2, and when no abnormality is detected, it decreases the counter by 1. Once the counter reaches "10," the ETACS-ECU sets the diagnosis code No. B16A8 if no load is detected.

PROBABLE CAUSES

- Malfunction of bulbs
- Damaged harness wires and connectors
- Malfunction of the ETACS-ECU

DIAGNOSIS PROCEDURE

STEP 1. Bulb check

Check the bulb(s) of the lamp that does not illuminate.

Q: Is the check result normal?

YES : Go to Step 2.
NO : Replace the bulb(s) of the lamp that does not illuminate.

STEP 2. Connector check: A-35 headlamp assembly (LH) connector, F-23 rear combination lamp (LH) connector, F-22 tail lamp (LH) <LANCER> connector, F-15 licence plate lamp (LH) connector and F-13 licence plate lamp (RH) connector

Q: Is the check result normal?

YES : Go to Step 3.
NO : Repair the defective connector.

STEP 3. Resistance measurement at the A-35 headlamp assembly (LH) connector, F-23 rear combination lamp (LH) connector, F-22 <LANCER> tail lamp (LH) connector, F-15 licence plate lamp (LH) connector and F-13 licence plate lamp (RH) connector

(1) Disconnect the connector, and measure at the wiring harness side.
(2) Measure the resistance between the connector terminal of lamp which does not illuminate and the body earth.
- Measure the resistance between the A-35 headlamp assembly (LH) connector terminal No. 6 and the body earth.
- Measure the resistance between the F-23 rear combination lamp (LH) connector terminal No. 1 and the body earth.
- Measure the resistance between the F-22 tail lamp (LH) connector terminal No. 1 and the body earth. <LANCER>
- Measure the resistance between the F-15 licence plate lamp (LH) connector terminal No. 1 and the body earth.
- Measure the resistance between the F-13 licence plate lamp (RH) connector terminal No. 1 and the body earth.

OK: Continuity exists (2 Ω or less)

Q: Is the check result normal?

YES : Go to Step 5.
NO : Go to Step 4.

STEP 4. Wiring harness check between the A-35 headlamp assembly (LH) connector terminal No. 6, F-23 rear combination lamp (LH) connector terminal No. 1, F-22 tail lamp (LH) <LANCER> connector terminal No. 1, F-15 licence plate lamp (LH) connector terminal No. 1 or F-13 licence plate lamp (RH) connector terminal No. 1 and the body earth

NOTE: Prior to the wiring harness inspection, check intermediate connector F-19 and F-28, and repair if necessary.

- Check the earth wires for open circuit.

Q: Is the check result normal?

YES : Go to Step 7.
NO : Repair the wiring harness.

www.cargeek.ir

www.CarGeek.ir

STEP 5. Connector check: C-304 and C-311 ETACS-ECU connector

Q: Is the check result normal?
YES : Go to Step 6.
NO : Repair the defective connector.

STEP 6. Wiring harness check between the A-35 headlamp assembly (LH) connector terminal No. 4, F-23 rear combination lamp (LH) connector terminal No. 3, F-22 tail lamp (LH) <LANCER> connector terminal No. 2, F-15 licence plate lamp (LH) connector terminal No. 2 or F-13 licence plate lamp (RH) connector terminal No. 2 and C-304 ETACS-ECU connector terminal No. 3 or C-311 ETACS-ECU connector terminal No. 10

NOTE: Prior to the wiring harness inspection, check intermediate connector D-16, F-19, F-28 and F-39, and repair if necessary.

- Check the power supply lines for open circuit and short circuit.

Q: Is the check result normal?
YES : Go to Step 7.
NO : Repair the wiring harness.

STEP 7. Check whether the diagnosis code is reset.

(1) Erase the diagnosis code.
(2) Turn the ignition switch from "LOCK" (OFF) position to "ON" position.
(3) Check if diagnosis code is set.

Q: Is the diagnosis code set?
YES : Replace the ETACS-ECU.
NO : The diagnosis is complete.

TROUBLE SYMPTOM CHART

M1541401000254

Trouble symptom	Inspection Procedure No.	Reference page
None of the tail lamps illuminate.	1	

SYMPTOM PROCEDURES

Inspection Procedure 1: None of the tail lamps illuminate.

⚠ CAUTION
Before replacing the ECU, ensure that the power supply circuit, the earth circuit and the communication circuit are normal.

COMMENTS ON TROUBLE SYMPTOM
If all the tail lamps do not illuminate normally, the tail lamp switch input circuit or ETACS-ECU may have a problem.

PROBABLE CAUSES
- Malfunction of column switch
- Malfunction of the ETACS-ECU
- Damaged harness wires and connectors

DIAGNOSIS PROCEDURE

STEP 1. M.U.T.-III diagnosis code
Check if diagnosis code is set to the ETACS-ECU.

Q: Is the diagnosis code set?
YES : Troubleshoot the ETACS-ECU. Refer to .
NO : Go to Step 2.

STEP 2. M.U.T.-III data list
Use the ETACS-ECU service data to check the signals related to the tail lamp illumination.
- Turn the lighting switch to the "TAIL" position.

Item No.	Item name	Normal condition
Item 340	Head lamp switch (tail)	ON

OK: Normal condition is displayed.

Q: Is the check result normal?
YES : Go to Step 3.
NO : Troubleshoot the ETACS-ECU. Refer to Inspection Procedure 11 "The column switch signal is not received" .

www.cargeek.ir

www.CarGeek.ir

STEP 3. Retest the system

Check that the tail lamp illuminates normally.

Q: Is the check result normal?

YES : The trouble can be an intermittent malfunction (Refer to GROUP 00 – How to use Troubleshooting/inspection Service Points – How to Cope with Intermittent Malfunction).

NO : Replace the ETACS-ECU.

ON-VEHICLE SERVICE

REPLACE THE BULB <LANCER SPORTBACK>

M1541402100050

STOP/TAIL LAMP BULB REPLACEMENT

1. Remove the rear combination lamp lid.

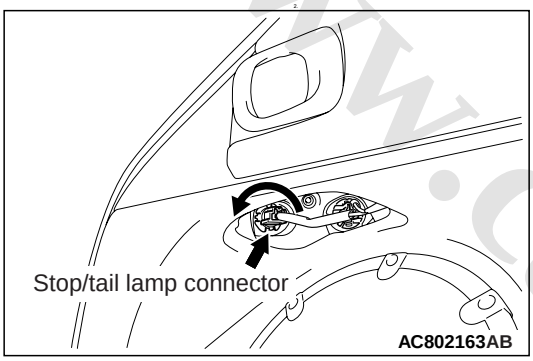

Remove the connector. Turn and remove the stop/tail lamp connector.

3. Remove the bulb from the stop/tail lamp connector.

REAR TURN-SIGNAL LAMP BULB REPLACEMENT

1. Remove the rear combination lamp lid.

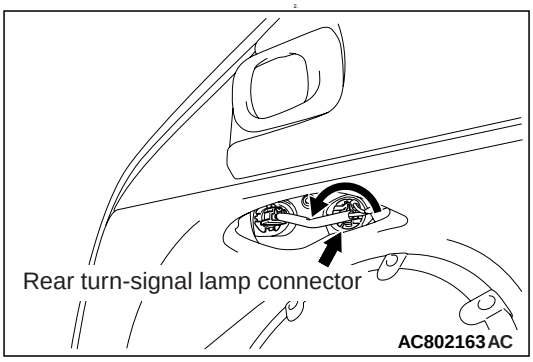

Remove the connector. Turn and remove the rear turn-signal lamp connector.

3. Remove the bulb from the rear turn-signal lamp connector.

BACK-UP LAMP BULB REPLACEMENT

1. Remove the tailgate lower trim lid. (Refer to GROUP 52A – Tailgate Trim .)

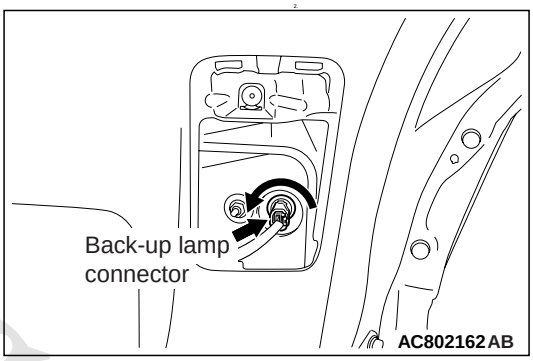

Remove the connector. Turn and remove the back-up lamp connector.

3. Remove the bulb from the back-up lamp connector.

www.cargeek.ir

www.CarGeek.ir

REAR COMBINATION LAMP REMOVAL AND INSTALLATION

M1541402200433

<LANCER>

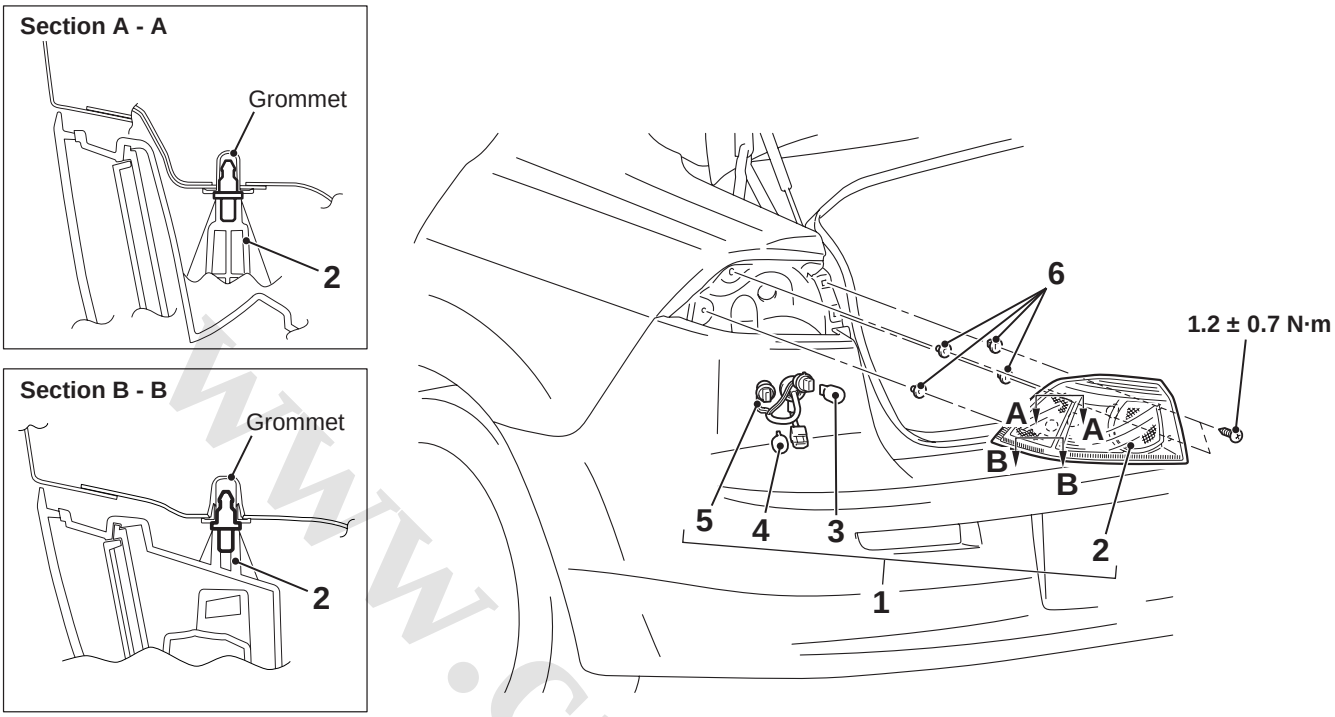

Removal Steps

1. Rear combination lamp assembly
2. Rear combination lamp unit
3. Stop/tail lamp bulb

Removal Steps (Continued)

4. Rear turn-signal lamp bulb
5. Socket
6. Grommet

www.cargeek.ir

www.cargeek.ir

www.CarGeek.ir

<LANCER SPORTBACK>

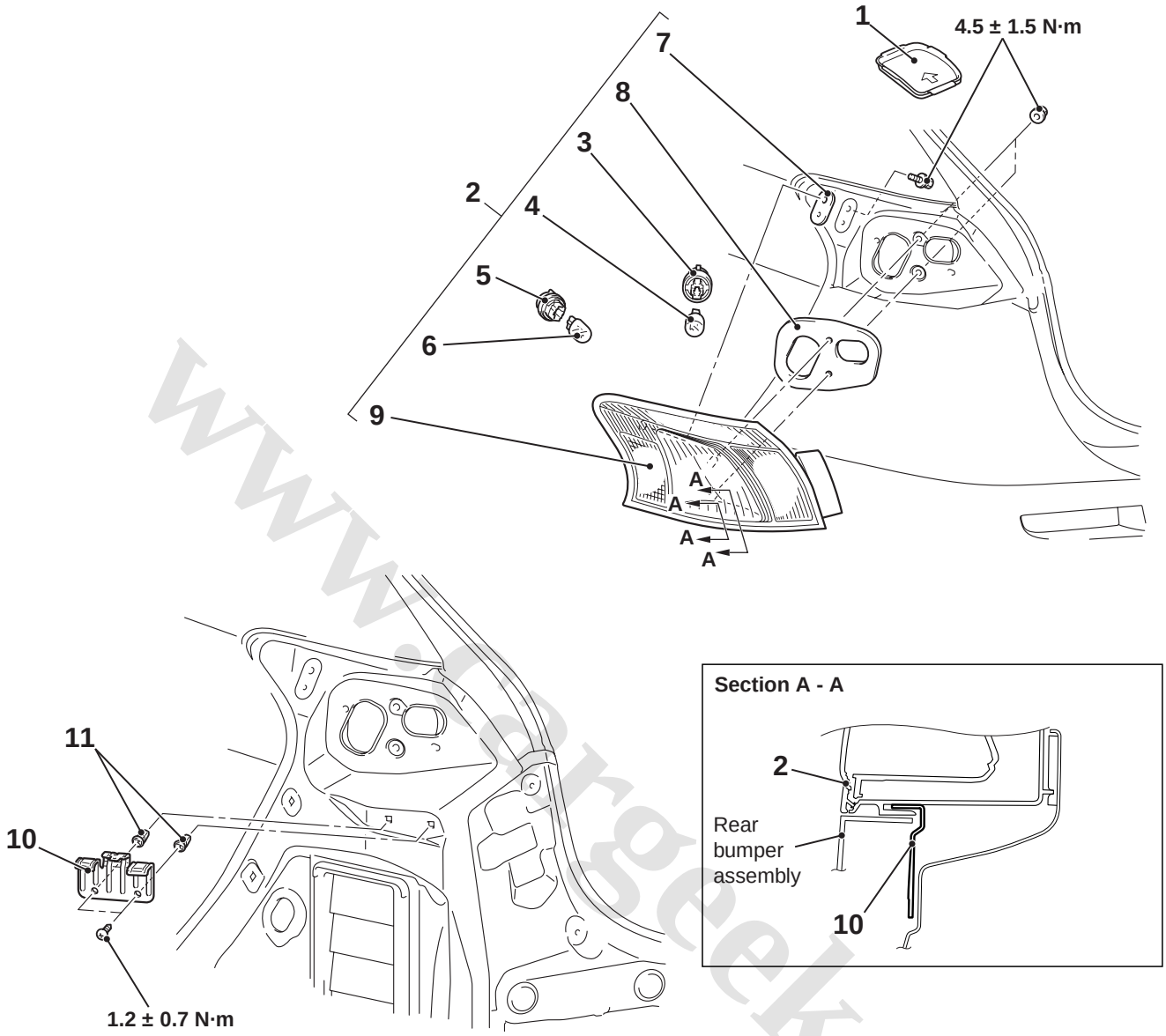

AC802344AB

Rear combination lamp removal steps

1. Rear combination lamp lid
- Stop/tail lamp connector and rear turn-signal lamp connector connection

<<A>> 2. Rear combination lamp assembly
3. Socket (stop/tail lamp)
4. Bulb (stop/tail lamp)
5. Socket (rear turn-signal lamp)
6. Bulb (rear turn-signal lamp)
7. Gasket

Rear combination lamp removal steps (Continued)

8. Gasket
9. Rear combination lamp unit

Rear combination lamp bracket removal steps

- Rear bumper assembly (Refer to GROUP 51, Rear bumper assembly).

>>A<< 10. Rear combination lamp bracket
11. Grommet

www.cargeek.ir

www.CarGeek.ir

REMOVAL SERVICE POINT

<<A>> REAR COMBINATION LAMP ASSEMBLY REMOVAL

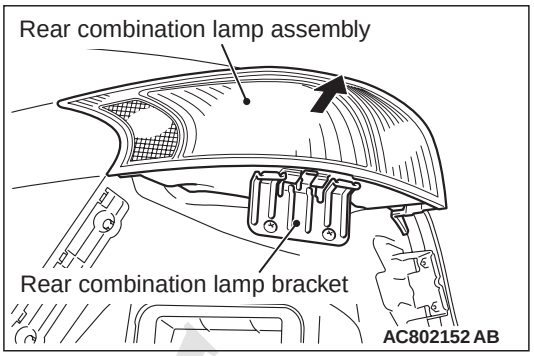

Remove the rear combination lamp assembly by pulling it toward a diagonal rear direction.

INSTALLATION SERVICE POINT

>>A<< REAR COMBINATION LAMP BRACKET INSTALLATION

1. Temporarily fix the rear combination lamp bracket.
2. Install the rear combination lamp assembly to the specified torque.
3. Install the rear combination lamp bracket to the specified torque.

TAIL LAMP REMOVAL AND INSTALLATION

M1541402600226

<LANCER>

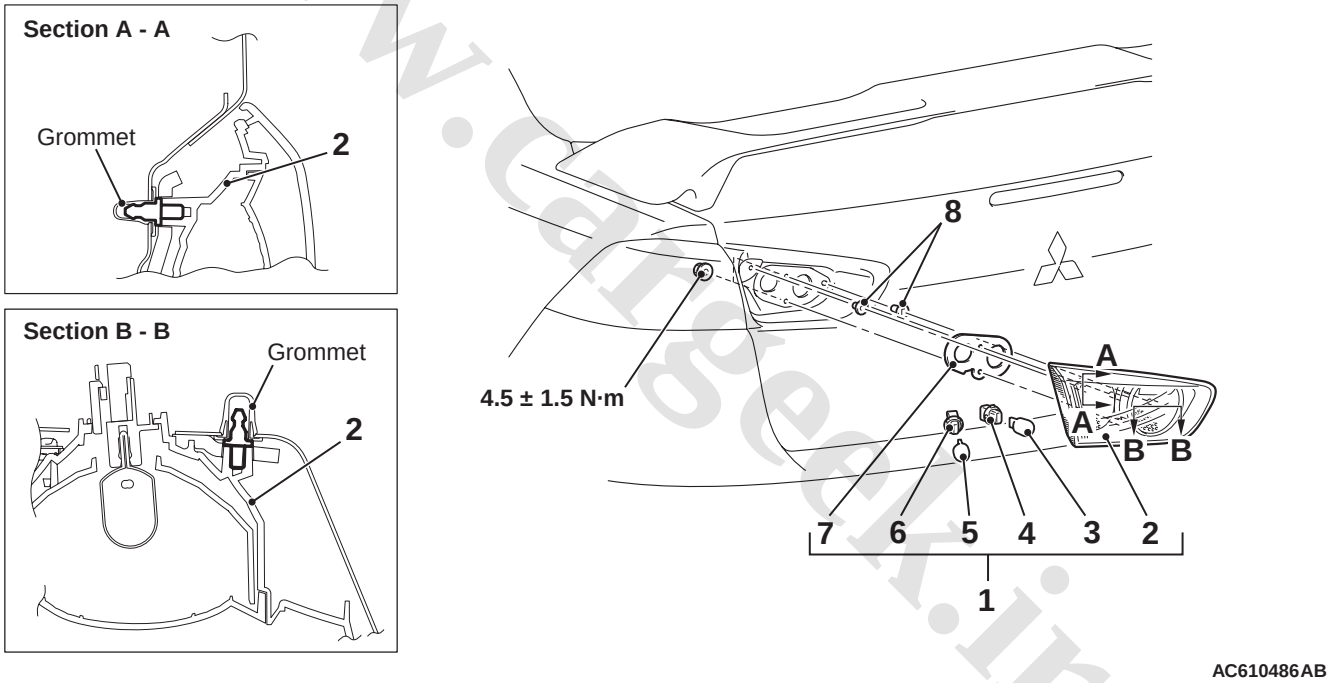

Removal Steps

- Trunk lid trim
1. Tail lamp assembly
2. Tail lamp unit
3. Back-up lamp bulb (Passenger's side tail lamp assembly) or rear fog lamp (Driver's side tail lamp assembly)

Removal Steps (Continued)

4. Socket
5. Tail lamp bulb
6. Socket
7. Gasket
8. Grommet

www.cargeek.ir

www.CarGeek.ir

<LANCER SPORTBACK>

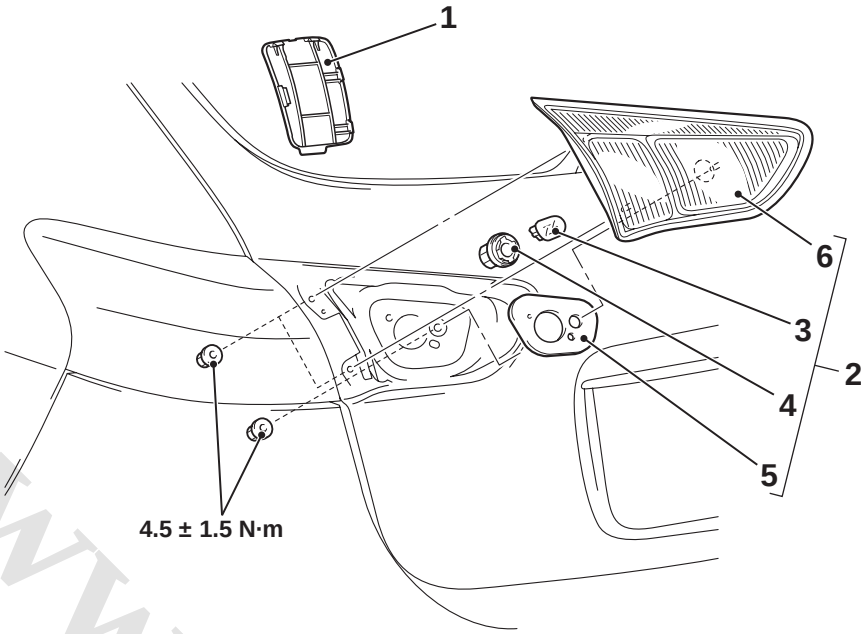

AC904107AC

Removal Steps
1. Tailgate lower trim lid (Refer to GROUP 52A, Tailgate Trim).
2. Tail lamp assembly
3. Bulb (back-up lamp)

Removal Steps (Continued)
4. Socket
5. Gasket
6. Tail lamp unit

FOG LAMP

SERVICE SPECIFICATION

M1540400900176

Item		Standard value	Limit
Front fog lamp aiming	Vertical direction	60 mm (1.15°) below horizontal (H)	39 mm (0.75°) to 89 mm (1.7°) below the horizontal (H)

www.cargeek.ir

www.CarGeek.ir

SPECIAL TOOLS

M1540401800172

www.cargeek.ir

www.cargeek.ir

www.CarGeek.ir

Tool	Number	Name	Use
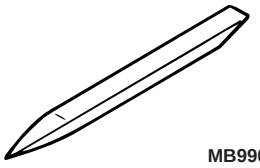 MB990784	MB990784	Ornament remover	Removal of front fog lamp bezel

www.cargeek.ir

www.cargeek.ir

www.CarGeek.ir

Tool	Number	Name	Use
a 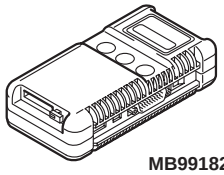 MB991824 b 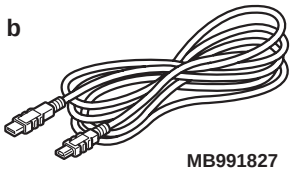 MB991827 c 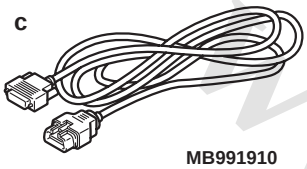 MB991910 d 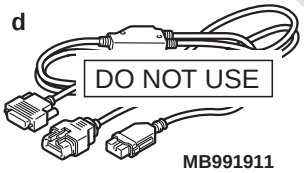 DO NOT USE MB991911 e 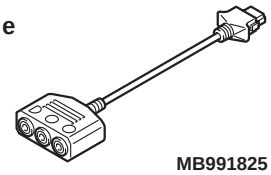 MB991825 f 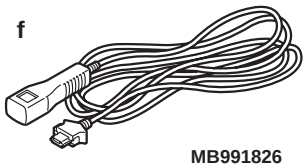 MB991826 MB991955	MB991955 a. MB991824 b. MB991827 c. MB991910 d. MB991911 e. MB991825 f. MB991826	M.U.T.-III sub-assembly a. Vehicle Communication Interface (V.C.I.) b. M.U.T.-III USB cable c. M.U.T.-III main harness A (Vehicles with CAN communication system) d. M.U.T.-III main harness B (Vehicles without CAN communication system) e. M.U.T.-III measure adapter f. M.U.T.-III trigger harness	⚠ CAUTION **For vehicles with CAN communication, use M.U.T.-III main harness A to send simulated vehicle speed. If you connect M.U.T.-III main harness B instead, the CAN communication does not function correctly.** Diagnosis code, service data and actuator test check.
a 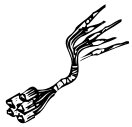 b 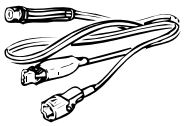 c 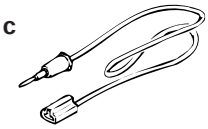 d DO NOT USE MB991223	MB991223 a. MB991219 b. MB991220 c. MB991221 d. MB991222	Harness set a. Check harness b. LED harness c. LED harness adapter d. Probe	Continuity check and voltage measurement at harness wire or connector a. For checking connector pin contact pressure b. For checking power supply circuit c. For checking power supply circuit d. For connecting a locally sourced tester

www.cargeek.ir

www.CarGeek.ir

Tool	Number	Name	Use
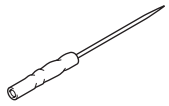 MB992006	MB992006	Extra fine probe	Continuity check and voltage measurement at harness wire or connector

TROUBLESHOOTING

STANDARD FLOW OF DIAGNOSTIC TROUBLESHOOTING

M1540401700142

Refer to GROUP 00 – Contents of troubleshooting .

TROUBLE SYMPTOM CHART

M1540401000239

Trouble symptom	Inspection Procedure No.	Reference page
The front fog lamps do not illuminate normally.	1	
One of the front fog lamps does not illuminate.	2	
The front fog lamp indicator does not illuminate normally.	3	
The rear fog lamp do not illuminate normally.	4	
The rear fog lamp indicator does not illuminate normally.	5	

www.cargeek.ir

www.CarGeek.ir

SYMPTOM PROCEDURES

Inspection Procedure 1: The front fog lamps do not illuminate normally.

⚠ CAUTION
Whenever the ECU is replaced, ensure that the power supply circuit, the earth circuit and the communication circuit are normal.

www.cargeek.ir

www.cargeek.ir

www.CarGeek.ir

Front Fog Lamp And ETACS-ECU Communication Circuit

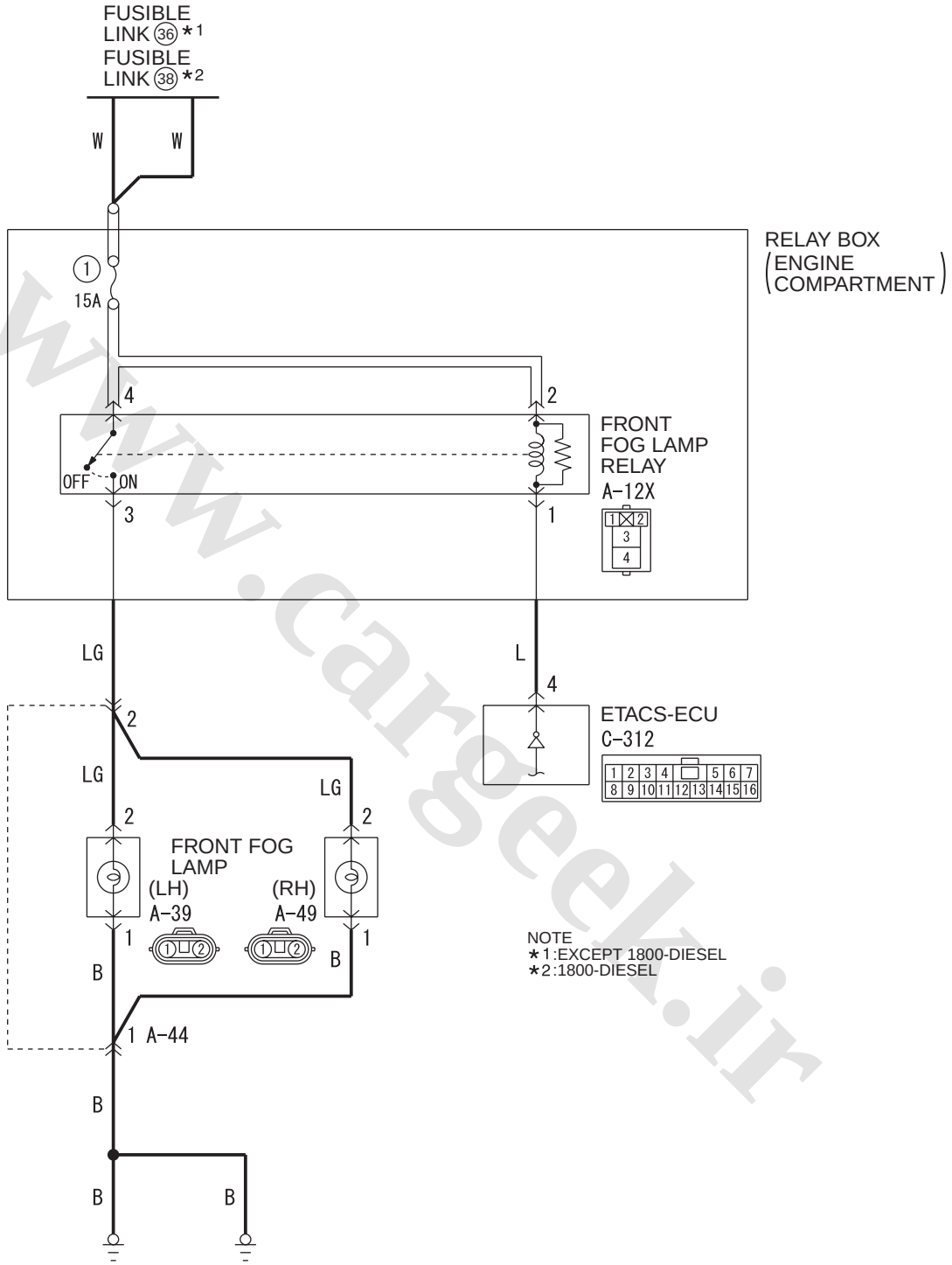

Wire colour code
B : Black LG : Light green G : Green L : Blue W : White Y : Yellow SB : Sky blue
BR : Brown O : Orange GR : Grey R : Red P : Pink V : Violet PU : Purple SI : Silver

WBH54E078A

www.cargeek.ir

www.CarGeek.ir

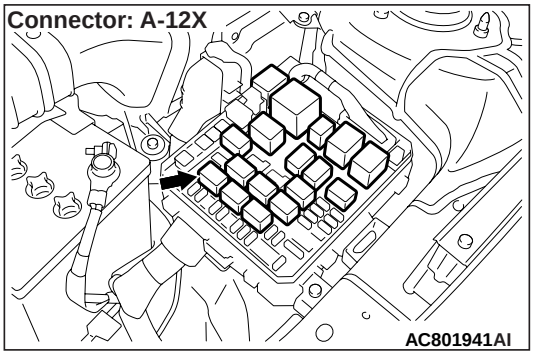

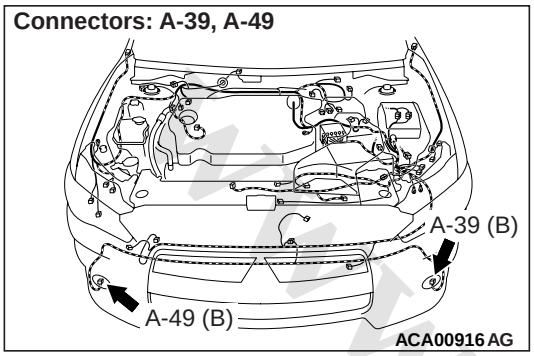

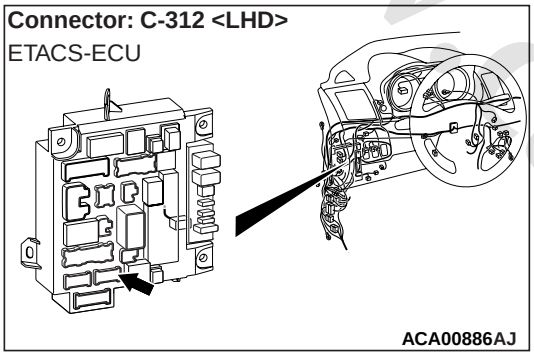

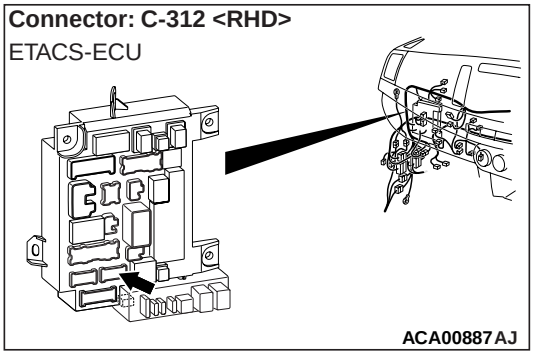

CIRCUIT OPERATION

If the front fog lamps do not illuminate normally, the input signal circuit(s) below or the ETACS-ECU may be defective.

- Tail lamp switch
- Headlamp switch
- Fog lamp switch
- Option coding information

COMMENTS ON TROUBLE SYMPTOM

When the front fog lamps do not illuminate normally, the mentioned input signal circuit(s) or ETACS-ECU may be defective.

PROBABLE CAUSES

- Malfunction of column switch
- Malfunction of the ETACS-ECU
- Damaged harness wires and connectors

DIAGNOSIS PROCEDURE

STEP 1. ETACS-ECU coding data check

(1) Operate the M.U.T.-III to read the ETACS-ECU option coding information (Refer to GROUP 00 – Coding Table).
(2) Check that the "Front fog lamp" is set to "Present."

Q: Is the check result normal?
YES : Go to Step 2.
NO : Operate the M.U.T.-III to set the option coding "Front fog lamp" to "Present," and check the trouble symptom.

STEP 2. Check the operation of the position lamps and the headlamps.

Check that the position lamps and the headlamps illuminate normally.

Q: Is the check result normal?
YES : Go to Step 3.
NO : Check the position lamps and the headlamps (Refer to trouble symptom chart).

STEP 3. M.U.T.-III diagnosis code

Check if diagnosis code is set to the ETACS-ECU.

Q: Is the diagnosis code set?
YES : Troubleshoot the ETACS-ECU. Refer to .
NO : Go to Step 4.

STEP 4. M.U.T.-III data list

Use the ETACS-ECU service data to check the signal related to the operation of front fog lamp function.

- Turn the fog lamp switch to ON.

Item No.	Item name	Normal condition
Item 345	Fog lamp ON	ON

OK: Normal condition is displayed.

Q: Is the check result normal?

www.cargeek.ir

www.CarGeek.ir

YES : Go to Step 5.
NO : Troubleshoot the ETACS-ECU. Refer to Inspection Procedure 11 "The column switch signal is not received" .

STEP 5. Connector check: A-12X front fog lamp relay connector

Q: Is the check result normal?
YES : Go to Step 6.
NO : Repair the defective connector.

STEP 6. Check the front fog lamp relay
Refer to .

Q: Is the check result normal?
YES : Go to Step 7.
NO : Replace the front fog lamp relay.

STEP 7. Voltage measurement at the A-12X front fog lamp relay connector
(1) Remove the front fog lamp relay, and measure at the relay box side.
(2) Measure the voltage between terminal 2 and the body earth, and between terminal 4 and body earth.

OK: System voltage

Q: Is the check result normal?
YES : Go to Step 9.
NO : Go to Step 8.

STEP 8. Wiring harness check between the A-12X front fog lamp relay connector terminal No. 2/4 and the fusible link (36) <except 1800-DIESEL> or (38) <1800-DIESEL>
- Check the output lines for open circuit.

Q: Is the check result normal?
YES : Go to Step 13.
NO : Repair the wiring harness.

STEP 9. Connector check: C-312 ETACS-ECU connector

Q: Is the check result normal?
YES : Go to Step 10.
NO : Repair the defective connector.

STEP 10. Wiring harness check between the A-12X front fog lamp relay connector terminal No. 1 and the C-312 ETACS-ECU connector terminal No. 4
- Check the output lines for open circuit.

Q: Is the check result normal?
YES : Go to Step 11.
NO : Repair the wiring harness.

STEP 11. Wiring harness check between the A-12X front fog lamp relay connector terminal No. 3 and the A-39 front fog lamp (LH) or A-49 front fog lamp (RH) connector terminal No. 2

NOTE: Before the wiring harness check, check the intermediate connector A-44, and then repair that if necessary.
- Check the output lines for open circuit.

Q: Is the check result normal?
YES : Go to Step 12.
NO : Repair the wiring harness.

STEP 12. Wiring harness check between the A-39 front fog lamp (LH) or A-49 front fog lamp (RH) connector terminal No. 1 and the body earth

NOTE: Before the wiring harness check, check the intermediate connector A-44, and then repair that if necessary.
- Check the earth lines for open circuit.

Q: Is the check result normal?
YES : Go to Step 13.
NO : Repair the wiring harness.

STEP 13. Retest the system
Check that the front fog lamps illuminate normally.

Q: Is the check result normal?
YES : The trouble can be an intermittent malfunction (Refer to GROUP 00 – How to use Troubleshooting/inspection Service Points – How to Cope with Intermittent Malfunction).
NO : Replace the ETACS-ECU.

www.cargeek.ir

www.CarGeek.ir

Inspection Procedure 2: One of the front fog lamps does not illuminate.

Front Fog Lamp Circuit

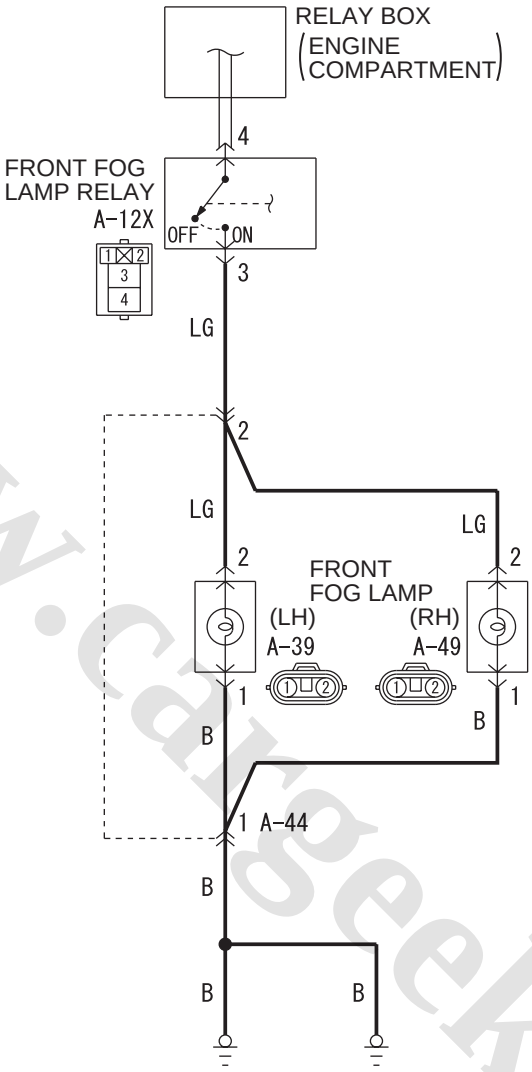

Wire colour code
B : Black LG : Light green G : Green L : Blue W : White Y : Yellow SB : Sky blue
BR : Brown O : Orange GR : Grey R : Red P : Pink V : Violet PU : Purple SI : Silver

W8G54X052A

Connector: A-12X

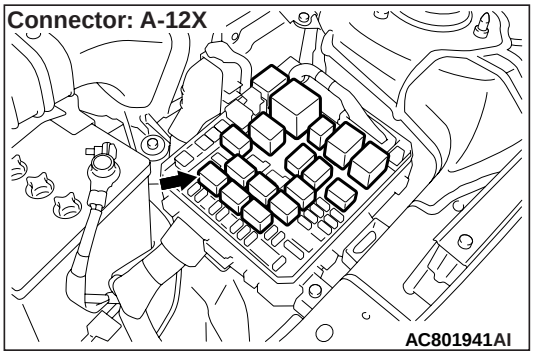

Connector: A-39

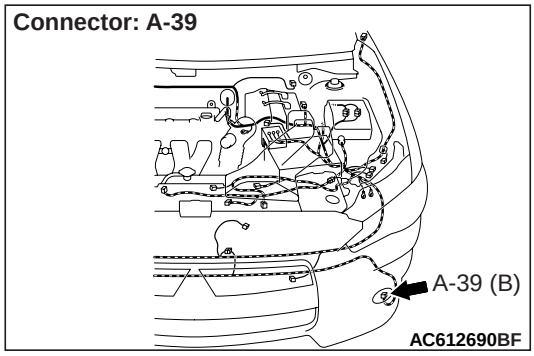

www.cargeek.ir

www.CarGeek.ir

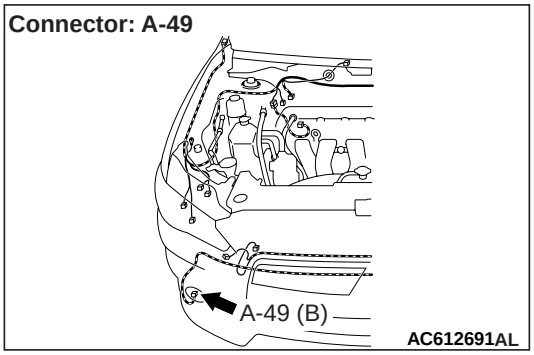

COMMENTS ON TROUBLE SYMPTOM
When one of the front fog lamps does not illuminate, the wiring harness, connector(s), or bulb(s) may have a problem, or the fuse may be burned out.

PROBABLE CAUSES
- Malfunction of bulbs
- Damaged harness wires and connectors

DIAGNOSIS PROCEDURE

STEP 1. Connector check: A-39 (LH) or A-49 (RH) front fog lamp connector

Q: Is the check result normal?
YES : Go to Step 2.
NO : Repair the defective connector.

STEP 2. Bulb check
Check the bulb(s) of the lamp that does not illuminate.

Q: Is the check result normal?
YES : Go to Step 3.
NO : Replace the bulb(s) of the lamp that does not illuminate.

STEP 3. Resistance measurement at the A-39 (LH) or A-49 (RH) front fog lamp connector
(1) Disconnect the connector, and measure at the wiring harness side.
(2) Measure the resistance between the connector of lamp which does not illuminate and the body earth.
- Measure the resistance between the A-39 (LH) front fog lamp connector terminal No. 1 and the body earth.
- Measure the resistance between the A-49 (RH) front fog lamp connector terminal No. 1 and the body earth.

OK: Continuity exists (2 Ω or less)

Q: Is the check result normal?
YES : Go to Step 5.
NO : Go to Step 4.

STEP 4. Wiring harness check between the A-39 (LH) or A-49 (RH) front fog lamp connector terminal No. 1 and body earth
NOTE: Before the wiring harness check, check the intermediate connector A-44, and then repair that if necessary.
- Check the earth wires for open circuit.

Q: Is the check result normal?
YES : Go to Step 7.
NO : Repair the wiring harness.

STEP 5. Connector check: A-12X front fog lamp relay connector

Q: Is the check result normal?
YES : Go to Step 6.
NO : Repair the defective connector.

STEP 6. Wiring harness check between the A-12X front fog lamp relay connector terminal No. 3 and the A-39 front fog lamp (LH) or A-49 front fog lamp (RH) connector terminal No. 2
NOTE: Before the wiring harness check, check the intermediate connector A-44, and then repair that if necessary.
- Check the output lines for open circuit.

Q: Is the check result normal?
YES : Go to Step 7.
NO : Repair the wiring harness.

STEP 7. Retest the system
Check that the front fog lamps illuminate normally.

Q: Is the check result normal?
YES : The trouble can be an intermittent malfunction (Refer to GROUP 00 – How to use Troubleshooting/inspection Service Points – How to Cope with Intermittent Malfunction).
NO : Go to Step 1.

www.cargeek.ir

www.CarGeek.ir

Inspection Procedure 3: The front fog lamp indicator does not illuminate normally.

⚠ CAUTION
Whenever the ECU is replaced, ensure that the power supply circuit, the earth circuit and the communication circuit are normal.

Front Fog Lamp Indicator Lamp Circuit

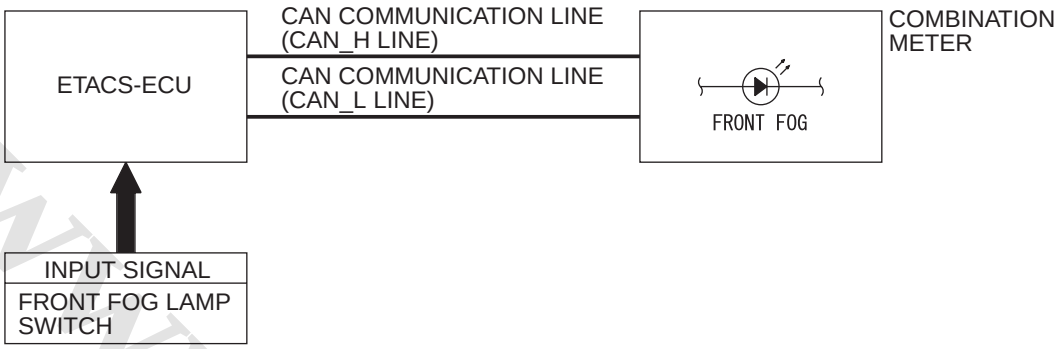

W4X54E035A

COMMENTS ON TROUBLE SYMPTOM
If the front fog lamp indicator does not illuminate normally, connector(s), wiring harness in the CAN bus lines, the ETACS-ECU or the combination meter may be defective.

PROBABLE CAUSES
- Malfunction of the ETACS-ECU
- Malfunction of the combination meter
- Damaged harness wires and connectors

DIAGNOSIS PROCEDURE

STEP 1. Check the front fog lamps
When the front fog lamp switch is operated, check that the front fog lamps illuminate/go off normally.

Q: Is the check result normal?
YES : Go to Step 2.
NO : First, repair the front fog lamps (Refer to trouble symptom chart).

STEP 2. M.U.T.-III CAN bus diagnostics
Use the M.U.T.-III to diagnose the CAN bus lines.

Q: Is the check result normal?
YES : Go to Step 3.
NO : Repair the CAN bus line (Refer to GROUP 54C – Troubleshooting).

STEP 3. M.U.T.-III diagnosis code
Check if diagnosis code is set to the ETACS-ECU.

Q: Is the diagnosis code set?
YES : Troubleshoot the ETACS-ECU. Refer to .
NO : Go to Step 4.

STEP 4. M.U.T.-III other system actuator test
Perform the actuator test for the combination meter, and check that the front fog lamp indicator illuminates (Refer to Combination Meter).

Q: Is the check result normal?
YES : Replace the ETACS-ECU.
NO : Replace the combination meter.

www.cargeek.ir

www.CarGeek.ir

Inspection Procedure 4: The rear fog lamp do not illuminate normally.

⚠ CAUTION
Whenever the ECU is replaced, ensure that the power supply circuit, the earth circuit and the communication circuit are normal.

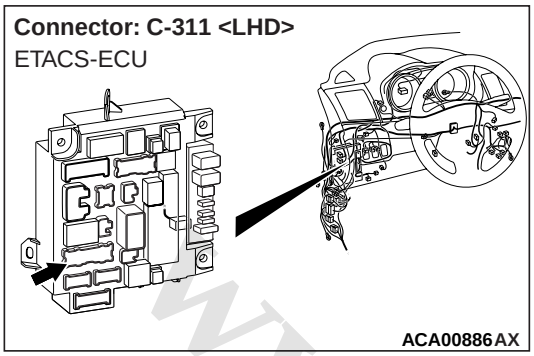

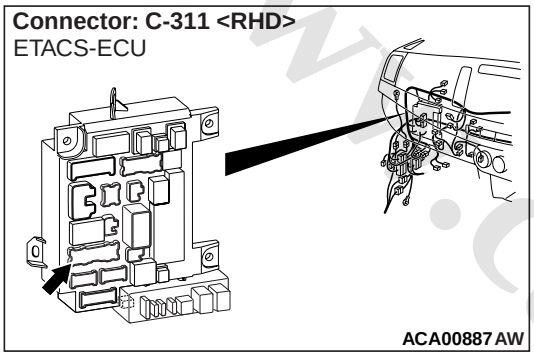

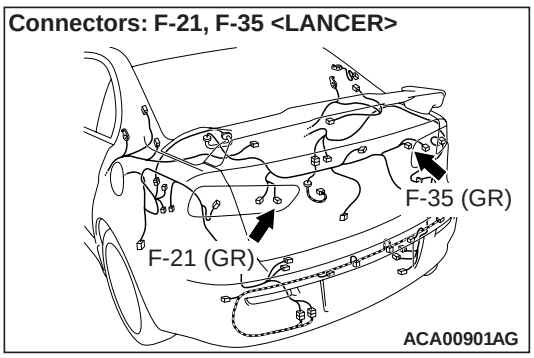

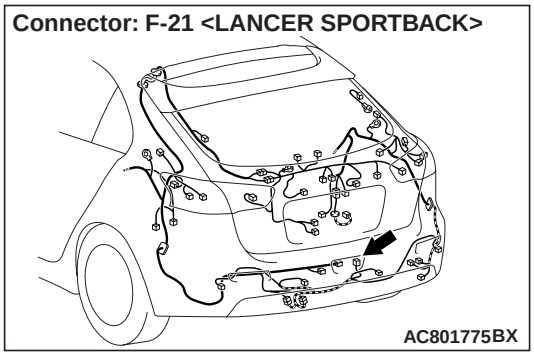

CIRCUIT OPERATION
If the rear fog lamps do not illuminate normally, the input signal circuit(s) below or the ETACS-ECU may be defective.

- Tail lamp switch
- Headlamp switch
- Fog lamp switch
- Option coding information

COMMENTS ON TROUBLE SYMPTOM
When the rear fog lamps do not illuminate normally, the mentioned input signal circuit(s) or ETACS-ECU may be defective.

PROBABLE CAUSES
- Malfunction of column switch
- Malfunction of the ETACS-ECU
- Damaged harness wires and connectors

DIAGNOSIS PROCEDURE

STEP 1. ETACS-ECU coding data check
(1) Operate the M.U.T.-III to read the ETACS-ECU option coding information (Refer to GROUP 00 – Coding List).
(2) Check that the "Rear fog lamp" is set to "Present."

Q: Is the check result normal?
YES : Go to Step 2.
NO : Operate the M.U.T.-III to set the option coding "Rear fog lamp" to "Present," and check the trouble symptom.

STEP 2. Check the operation of the position lamps and the headlamps.
Check that the position lamps and the headlamps illuminate normally.

Q: Is the check result normal?
YES : Go to Step 3.
NO : Check the position lamps and the headlamps (Refer to trouble symptom chart).

STEP 3. M.U.T.-III diagnosis code
Check if diagnosis code is set to the ETACS-ECU.

Q: Is the diagnosis code set?
YES : Troubleshoot the ETACS-ECU. Refer to .
NO : Go to Step 4.

www.cargeek.ir

www.CarGeek.ir

STEP 4. M.U.T.-III data list

Use the ETACS-ECU service data to check the signal related to the operation of rear fog lamp function.

- Turn the fog lamp switch to ON.

Item No.	Item name	Normal condition
Item 345	Fog lamp ON	ON

OK: Normal condition is displayed.

Q: Is the check result normal?
YES : Go to Step 5.
NO : Troubleshoot the ETACS-ECU. Refer to Inspection Procedure 11 "The column switch signal is not received" .

STEP 5. Connector check: F-21 <except LANCER (RHD)> or F-35 <LANCER (RHD)> rear fog lamp connector

Q: Is the check result normal?
YES : Go to Step 6.
NO : Repair the defective connector.

STEP 6. Check the bulb of the rear fog lamp

Check the bulb of the defective lamp.

Q: Is the check result normal?
YES : Go to Step 7.
NO : Replace the bulb of the defective lamp.

STEP 7. Resistance measurement at the F-21 <except LANCER (RHD)> or F-35 <LANCER (RHD)> rear fog lamp connector

(1) Disconnect the connector, and measure at the wiring harness side.
(2) Check the resistance between the lamp connector and body earth.
- Resistance between F-21 <except LANCER (RHD)> or F-35 <LANCER (RHD)> rear fog lamp connector terminal No. 2 and body earth

OK: Continuity exists (2 Ω or less)

Q: Is the check result normal?
YES : Go to Step 9.
NO : Go to Step 8.

STEP 8. Wiring harness check between the F-21 <except LANCER (RHD)> or F-35 <LANCER (RHD)> rear fog lamp connector terminal No. 2 and the body earth

NOTE: Before the wiring harness check, check the intermediate connector F-28 <LANCER> or F-19 <LANCER SPORTBACK>, and then repair that if necessary.

- Check the earth wires for open circuit.

Q: Is the check result normal?
YES : Go to Step 9.
NO : Repair the wiring harness.

STEP 9. Connector check: C-311 ETACS-ECU connector

Q: Is the check result normal?
YES : Go to Step 10.
NO : Repair the defective connector.

STEP 10. Wiring harness check between the F-21 <except LANCER (RHD)> or F-35 <LANCER (RHD)> rear fog lamp connector terminal No. 3 and the C-311 ETACS-ECU connector terminal No. 14

NOTE: Before the wiring harness check, check the intermediate connector F-28 <LANCER> or F-19 <LANCER SPORTBACK> and D-16, and then repair that if necessary.

- Check the output lines for open circuit.

Q: Is the check result normal?
YES : Go to Step 11.
NO : Repair the wiring harness.

STEP 11. Retest the system

Check that the rear fog lamp illuminate normally.

Q: Is the check result normal?
YES : The trouble can be an intermittent malfunction (Refer to GROUP 00 – How to use Troubleshooting/inspection Service Points – How to Cope with Intermittent Malfunction).
NO : Replace the ETACS-ECU.

www.cargeek.ir

www.CarGeek.ir

Inspection Procedure 5: The rear fog lamp indicator does not illuminate normally.

⚠ CAUTION
Whenever the ECU is replaced, ensure that the power supply circuit, the earth circuit and the communication circuit are normal.

Rear Fog Lamp Indicator Lamp Circuit

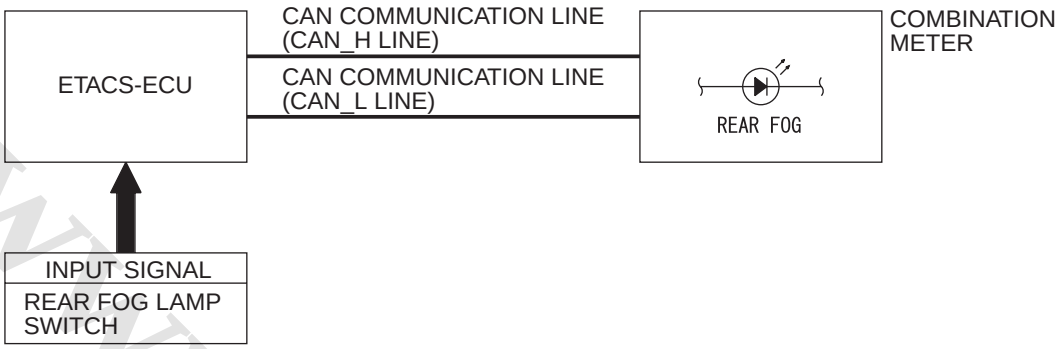

W4X54E186A

COMMENTS ON TROUBLE SYMPTOM
If the rear fog lamp indicator does not illuminate normally, connector(s), wiring harness in the CAN bus lines, the ETACS-ECU or the combination meter may be defective.

PROBABLE CAUSES
- Malfunction of the ETACS-ECU
- Malfunction of the combination meter
- Damaged harness wires and connectors

DIAGNOSIS PROCEDURE

STEP 1. Check the rear fog lamp
When the rear fog lamp switch is operated, check that the rear fog lamps illuminate/go off normally.

Q: Is the check result normal?
YES : Go to Step 2.
NO : First, repair the rear fog lamp (Refer to trouble symptom chart).

STEP 2. M.U.T.-III CAN bus diagnostics
Use the M.U.T.-III to diagnose the CAN bus lines.

Q: Is the check result normal?
YES : Go to Step 3.
NO : Repair the CAN bus line (Refer to GROUP 54C – Troubleshooting).

STEP 3. M.U.T.-III diagnosis code
Check if diagnosis code is set to the ETACS-ECU.

Q: Is the diagnosis code set?
YES : Troubleshoot the ETACS-ECU. Refer to .
NO : Go to Step 4.

STEP 4. M.U.T.-III other system actuator test
Perform the actuator test for the combination meter, and check that the rear fog lamp indicator illuminates (Refer to Combination Meter).

Q: Is the check result normal?
YES : Replace the ETACS-ECU.
NO : Replace the combination meter.

www.cargeek.ir

www.CarGeek.ir

ON-VEHICLE SERVICE

FRONT FOG LAMP AIMING

M1540400300776

⚠ CAUTION

When marking the aiming adjustment, be sure to mask those lamps which are not being adjusted.

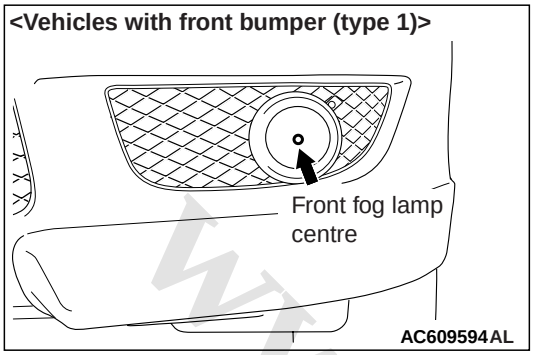

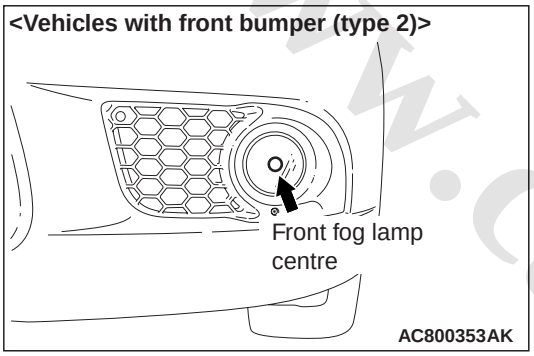

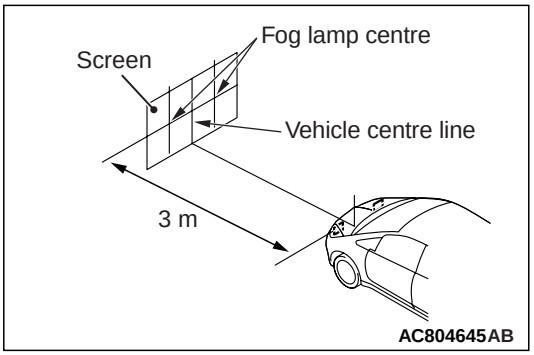

1. Set the distance between the screen and the centre of the front fog lamps as shown in the illustration.
2. Inflate the tyres to the specified pressures and there should be no other load in the vehicles other than driver or substituted weight of approximately 75 kg placed in the driver's position.
3. With the engine running at 2,000 r/min, aim the front fog lamp.
4. Insert a Phillips screwdriver into the service hole and place it on the adjusting screw.

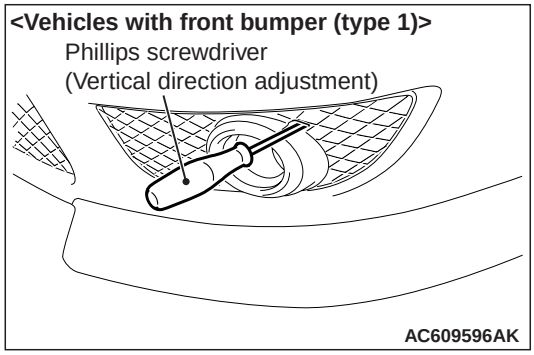

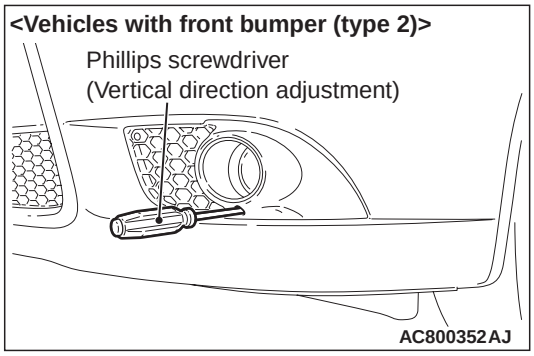

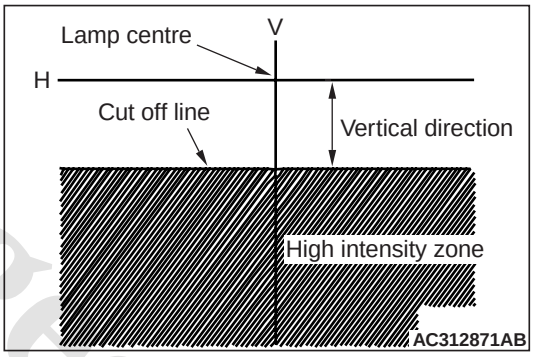

5. Adjust the cut off line (boundary between light and dark) position to the standard value with the adjusting screw.

   Standard value:
   Vertical direction; 60 mm (1.15°) below horizontal (H)

   Limit:
   Vertical direction; 39 mm (0.75°) to 89 mm (1.7°) below the horizontal (H)

NOTE: The horizontal direction is non-adjustable.

REPLACE THE FRONT FOG LAMP BULB

M1540400400762

⚠ CAUTION

Don't touch the bulb surface with bare hands or dirty gloves. If the bulb surface (glass part) gets dirty, clean it with alcohol or thinner immediately and dry well, and then install it.

1. Remove the front fog lamp bezel and the front fog lamp assembly. (Refer to .)

www.cargeek.ir

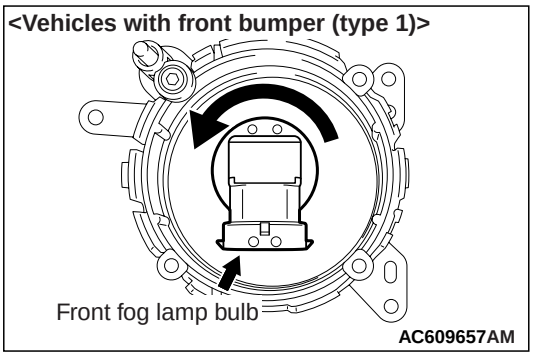

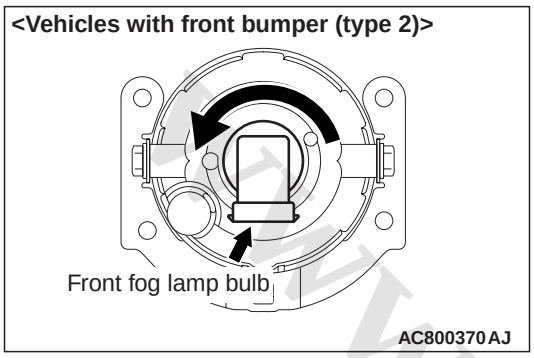

2. Disconnect the connector and withdraw the bulb.
3. After replacing the bulb, securely connect the connector, and install the front fog lamp assembly and the front fog lamp bezel.

FRONT FOG LAMP REMOVAL AND INSTALLATION

M1540402600513

<VEHICLES WITH FRONT BUMPER (TYPE 1)>

Post-installation operation
Check the beam direction of the front fog lamp (Refer to Front Fog Lamp Aiming).

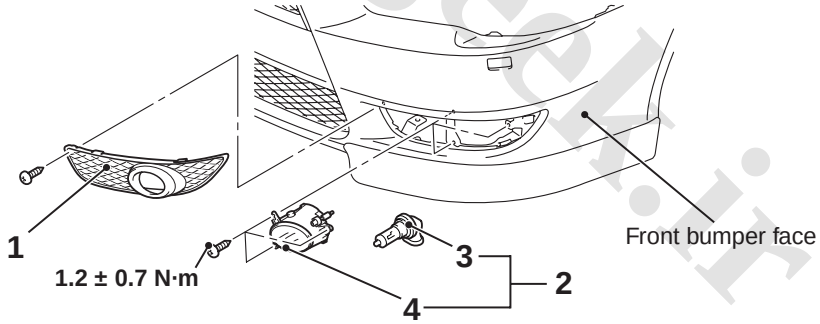

www.cargeek.ir

www.CarGeek.ir

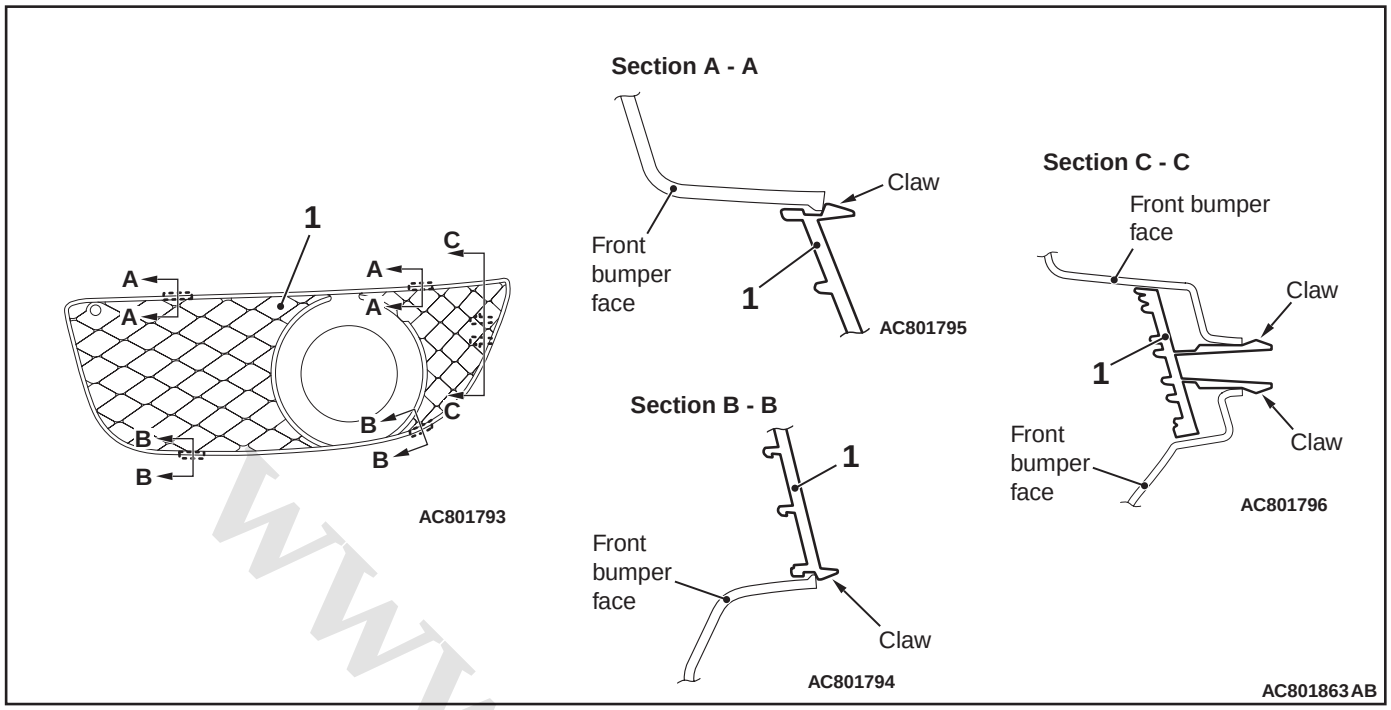

Removal steps

1. Fog lamp bezel
2. Fog lamp assembly

Removal steps (Continued)

3. Bulb
4. Fog lamp unit

<VEHICLES WITH FRONT BUMPER (TYPE 2)>

Post-installation operation
Check the beam direction of the front fog lamp (Refer to Front Fog Lamp Aiming).

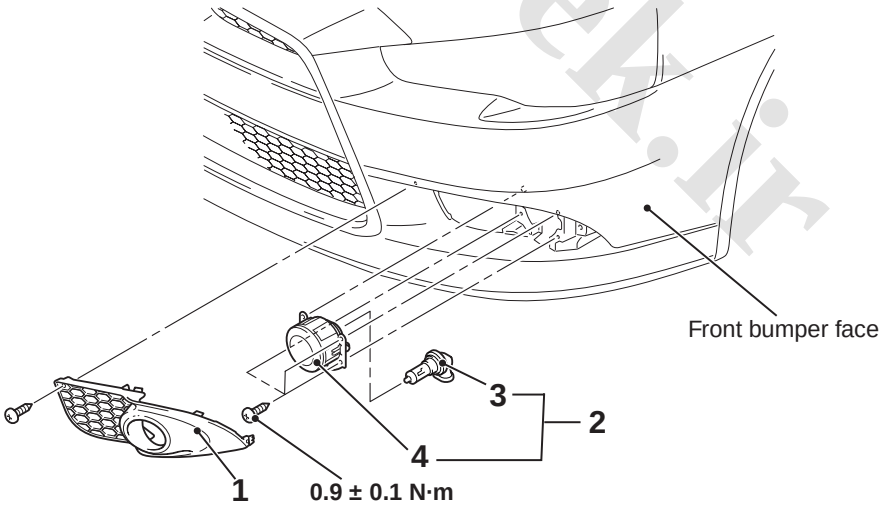

www.cargeek.ir

www.CarGeek.ir

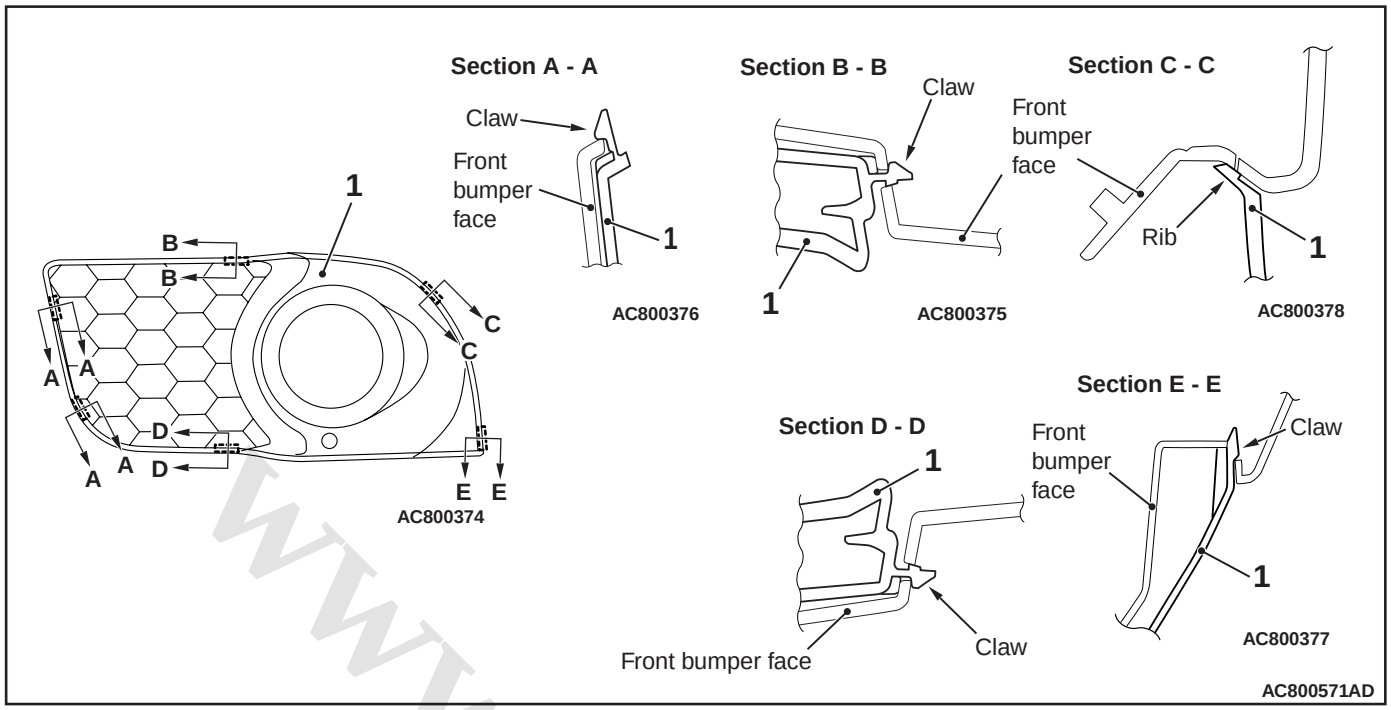

Removal steps

1. Fog lamp bezel
2. Fog lamp assembly

Removal steps (Continued)

3. Bulb
4. Fog lamp unit

REAR FOG LAMP REMOVAL AND INSTALLATION

M1542600300248

<LANCER>

Refer to tail lamp removal and installation .

<LANCER SPORTBACK>

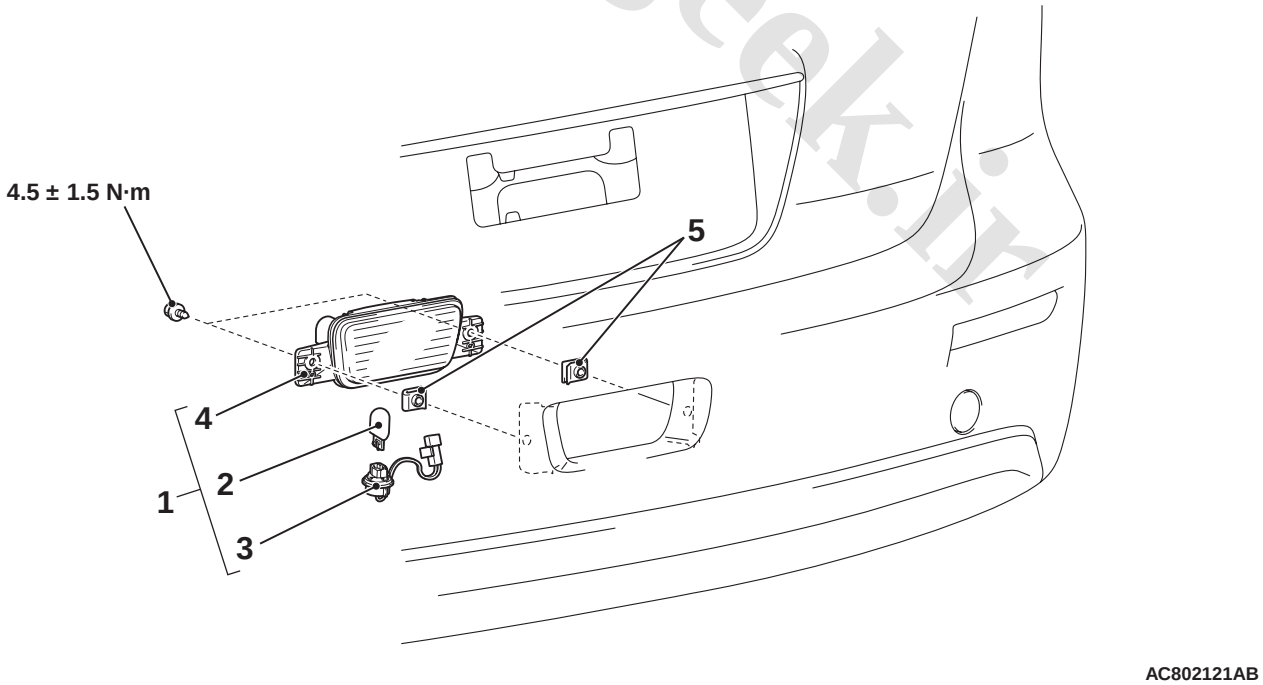

Removal steps

1. Rear fog lamp assembly
2. Bulb

Removal steps (Continued)

3. Socket

www.cargeek.ir

www.CarGeek.ir

Removal steps (Continued)

4. Rear fog lamp unit
5. Spring nut

INSPECTION

FRONT FOG LAMP RELAY CHECK

M1540402800108

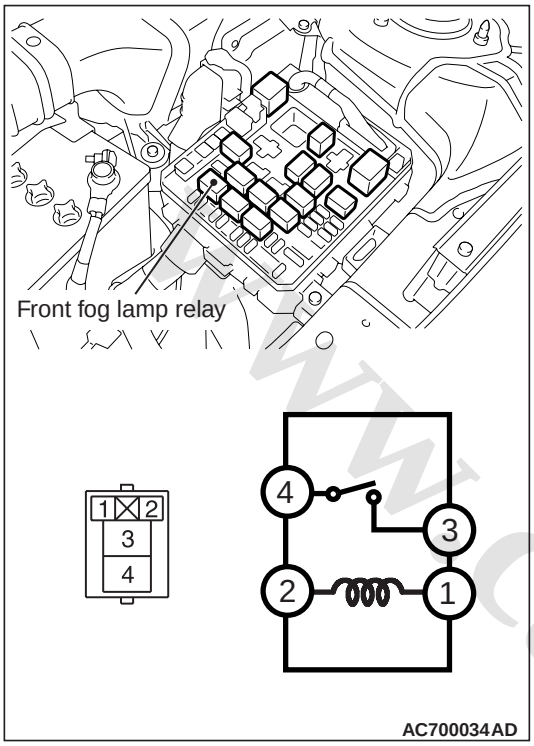

Battery voltage	Terminal number	Normal condition
At no energisation	3 – 4	No continuity
With current supply [terminal 2 (+), terminal 1 (–)]		Continuity exists (2 Ω or less)

www.cargeek.ir

www.CarGeek.ir

SIDE TURN-SIGNAL LAMP

REMOVAL AND INSTALLATION

M1541800200457

<LANCER>

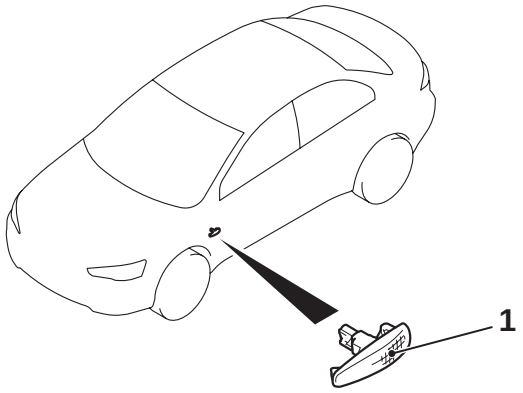

AC609819AB

Removal step

<<**A**>> >>**A**<< 1. Side turn-signal lamp assembly

<LANCER SPORTBACK>

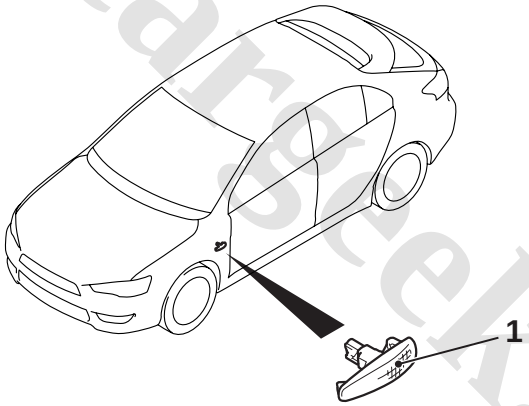

AC802267AB

Removal step

<<**A**>> >>**A**<< 1. Side turn-signal lamp assembly

REMOVAL SERVICE POINT

<<A>> SIDE TURN-SIGNAL LAMP REMOVAL

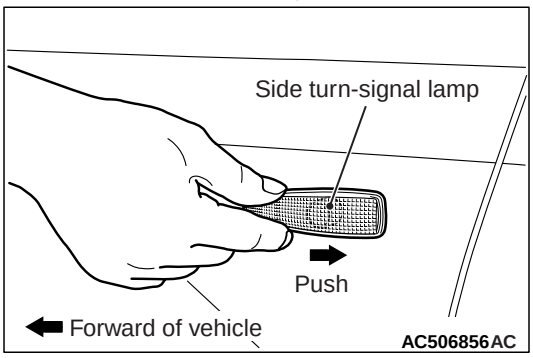

Push the side turn-signal lamp toward the vehicle rear to bend the hook, and then remove by disengaging the tab from the fender panel.

www.cargeek.ir

www.CarGeek.ir

INSTALLATION SERVICE POINT

>>A<< SIDE TURN-SIGNAL LAMP INSTALLATION

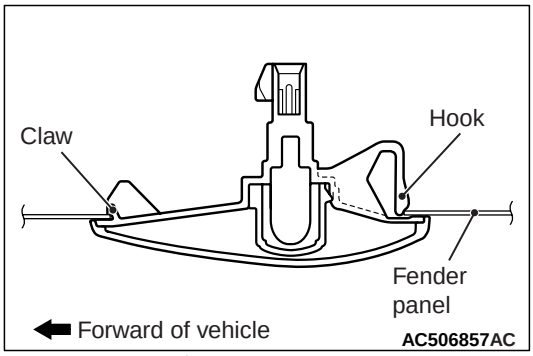

Engage the claw to the fender panel to install the side turn signal lamp.

www.cargeek.ir

www.cargeek.ir

www.CarGeek.ir

INTERIOR LAMP

SPECIAL TOOLS

M1541301600185

www.cargeek.ir

www.cargeek.ir

www.CarGeek.ir

Tool	Number	Name	Use
a 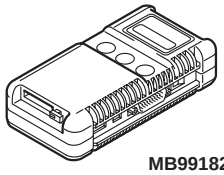 MB991824 b 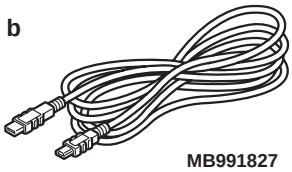 MB991827 c 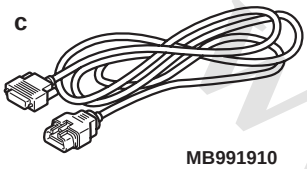 MB991910 d 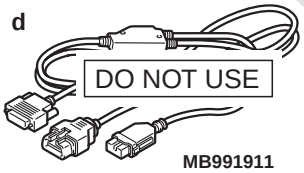 DO NOT USE MB991911 e 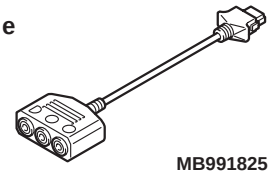 MB991825 f 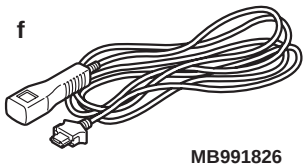 MB991826 MB991955	MB991955 a. MB991824 b. MB991827 c. MB991910 d. MB991911 e. MB991825 f. MB991826	M.U.T.-III sub-assembly a. Vehicle Communication Interface (V.C.I.) b. M.U.T.-III USB cable c. M.U.T.-III main harness A (Vehicles with CAN communication system) d. M.U.T.-III main harness B (Vehicles without CAN communication system) e. M.U.T.-III measure adapter f. M.U.T.-III trigger harness	⚠ CAUTION **For vehicles with CAN communication, use M.U.T.-III main harness A to send simulated vehicle speed. If you connect M.U.T.-III main harness B instead, the CAN communication does not function correctly.** Diagnosis code, service data and actuator test check.
a 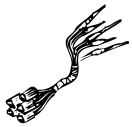 b 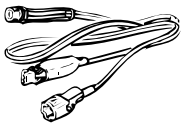 c 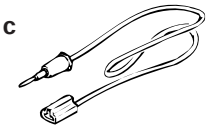 d DO NOT USE MB991223	MB991223 a. MB991219 b. MB991220 c. MB991221 d. MB991222	Harness set a. Check harness b. LED harness c. LED harness adapter d. Probe	Continuity check and voltage measurement at harness wire or connector a. For checking connector pin contact pressure b. For checking power supply circuit c. For checking power supply circuit d. For connecting a locally sourced tester

www.cargeek.ir

www.CarGeek.ir

Tool	Number	Name	Use
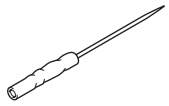 MB992006	MB992006	Extra fine probe	Continuity check and voltage measurement at harness wire or connector

TROUBLESHOOTING

STANDARD FLOW OF DIAGNOSTIC TROUBLESHOOTING

M1541301500166

Refer to GROUP 00 – Contents of troubleshooting .

TROUBLE SYMPTOM CHART

M1541300200258

Trouble symptom	Inspection Procedure No.	Reference page
The front room lamp does not illuminate normally.	1	
The rear room lamp does not illuminate normally.	2	
The luggage compartment lamp does not illuminate normally.	3	
The interior lamp automatic shutoff function does not work normally.	4	

www.cargeek.ir

www.CarGeek.ir

SYMPTOM PROCEDURES

Inspection Procedure 1: The front room lamp does not illuminate normally.

⚠ CAUTION

Whenever the ECU is replaced, ensure that the power supply circuit, the earth circuit and the communication circuit are normal.

Front Room Lamp Circuit

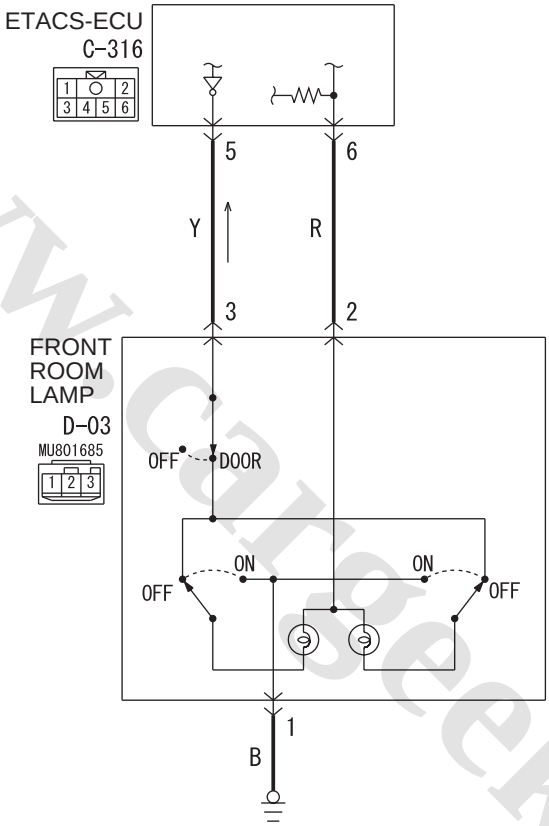

Wire colour code
B : Black LG : Light green G : Green L : Blue W : White Y : Yellow SB : Sky blue
BR : Brown O : Orange GR : Grey R : Red P : Pink V : Violet PU : Purple SI : Silver

W8G54X000A

Connector: C-316 <LHD>
ETACS-ECU

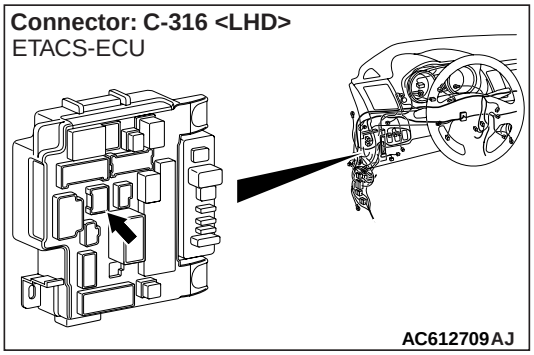

Connector: C-316 <RHD>
ETACS-ECU

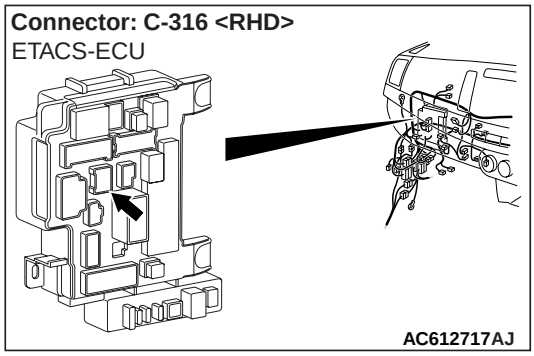

www.cargeek.ir

www.CarGeek.ir

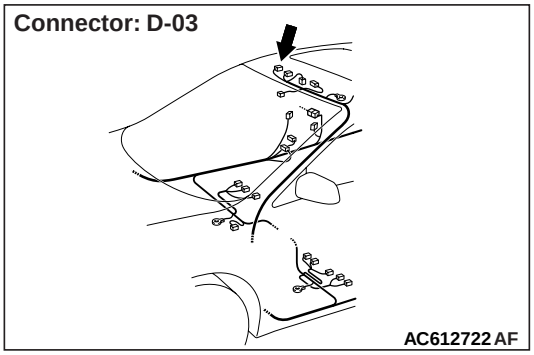

OPERATION

The ETACS-ECU illuminates and extinguishes the front room lamp in accordance with the input signals below.

- Ignition switch (IG1)
- Key reminder switch
- Door switches
- Front door lock actuator (driver's side)

COMMENTS ON TROUBLE SYMPTOM

If this does not work normally, the above switch input circuit(s), front room lamp, or ETACS-ECU may have a problem.

PROBABLE CAUSES

- Malfunction of the key reminder switch
- Malfunction of door switch
- Malfunction of the front door lock actuator (driver's side)
- Malfunction of front room lamp
- Malfunction of the ETACS-ECU
- Damaged harness wires and connectors

DIAGNOSIS PROCEDURE

STEP 1. Rear room lamp operation check

Check that the rear room lamp illuminates and extinguishes normally.

Q: Is the check result normal?

YES : Go to Step 4.
NO : Go to Step 2.

STEP 2. M.U.T.-III diagnosis code

Check if diagnosis code is set to the ETACS-ECU.

Q: Is the diagnosis code set?

YES : Troubleshoot the ETACS-ECU. Refer to .
NO : Go to Step 3.

STEP 3. M.U.T.-III data list

Use the ETACS-ECU service data to check the signals related to the operation of front room lamp.

- Turn the ignition switch to the LOCK (OFF) position.
- Remove the ignition key from the ignition key cylinder.
- Open each door.

Item No.	Item name	Normal condition
Item 228	Dr door unlock	ON
Item 254	IG voltage	1 V or less
Item 256	Dr door ajar switch	Open
Item 257	As door ajar switch	Open
Item 258	RR door ajar switch	Open
Item 259	RL door ajar switch	Open
Item 264	Handle lock switch	Key in → Key out

OK: Normal conditions are displayed for all the items.

Q: Is the check result normal?

www.cargeek.ir

www.CarGeek.ir

Normal conditions are displayed for all the items. : Replace the ETACS-ECU.

Normal condition is not displayed for item No. 228. : Troubleshoot the ETACS-ECU. Refer to Inspection Procedure 4 "The front door lock actuator (driver's side) signal is not received" <L.H. drive vehicles> or <R.H. drive vehicles>.

Normal condition is not displayed for item No. 254. : Troubleshoot the ETACS-ECU. Refer to Inspection Procedure 2 "The ignition switch (IG1) signal is not received" .

Normal condition is not displayed for item No. 256. : Troubleshoot the ETACS-ECU. Refer to Inspection Procedure 5 "The front door switch (driver's side) signal is not received" .

Normal condition is not displayed for item No. 257. : Troubleshoot the ETACS-ECU. Refer to Inspection Procedure 6 "The front door switch (passenger's side) signal is not received" .

Normal condition is not displayed for item No. 258. : Troubleshoot the ETACS-ECU. Refer to Inspection Procedure 7 "The rear door switch (RH) signal is not received" .

Normal condition is not displayed for item No. 259. : Troubleshoot the ETACS-ECU. Refer to Inspection Procedure 8 "The rear door switch (LH) signal is not received" .

Normal condition is not displayed for item No. 264. : Troubleshoot the ETACS-ECU. Refer to Inspection Procedure 3 "Key reminder switch signal is not received" .

STEP 4. Connector check: D-03 front room lamp connector

Q: Is the check result normal?
YES : Go to Step 5.
NO : Repair the defective connector.

STEP 5. Front room lamp bulb check

Check that the front room lamp bulb is normal.

Q: Is the check result normal?
YES : Go to Step 6.
NO : Replace the front room lamp bulb.

STEP 6. Connector check: C-316 ETACS-ECU connector

Q: Is the check result normal?
YES : Go to Step 7.
NO : Repair the defective connector.

STEP 7. Wiring harness check between the D-03 front room lamp connector terminal No. 2/3 and the C-316 ETACS-ECU connector terminal No. 6/5

- Check the input/output line for open circuit.

Q: Is the check result normal?
YES : Go to Step 8.
NO : Repair the wiring harness.

STEP 8. Connector check: D-03 front room lamp connector

Q: Is the check result normal?
YES : Go to Step 9.
NO : Repair the defective connector.

STEP 9. Wiring harness check between the D-03 front room lamp connector terminal No. 1 and the body earth

- Check the output lines for open circuit.

Q: Is the check result normal?
YES : Replace the front room lamp, and then go to Step 10.
NO : Repair the wiring harness.

STEP 10. Retest the system

Check that the front room lamp illuminates/extinguishes normally.

Q: Is the check result normal?
YES : The trouble can be an intermittent malfunction (Refer to GROUP 00 – How to use Troubleshooting/inspection Service Points – How to Cope with Intermittent Malfunction).
NO : Replace the front room lamp.

www.cargeek.ir

www.CarGeek.ir

Inspection Procedure 2: The rear room lamp does not illuminate normally.

⚠ CAUTION

Whenever the ECU is replaced, ensure that the power supply circuit, the earth circuit and the communication circuit are normal.

Rear Room Lamp Circuit

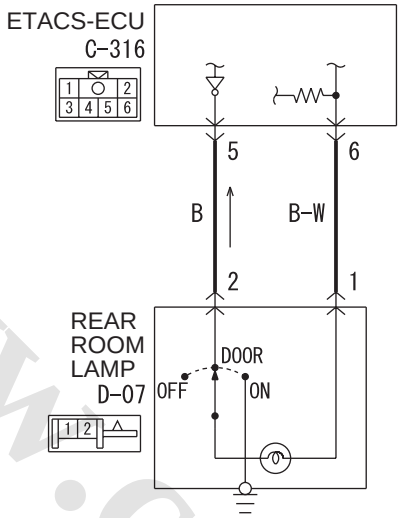

Wire colour code
B : Black LG : Light green G : Green L : Blue W : White Y : Yellow SB : Sky blue
BR : Brown O : Orange GR : Grey R : Red P : Pink V : Violet PU : Purple SI : Silver

W8G54X001A

Connector: C-316 <LHD>
ETACS-ECU

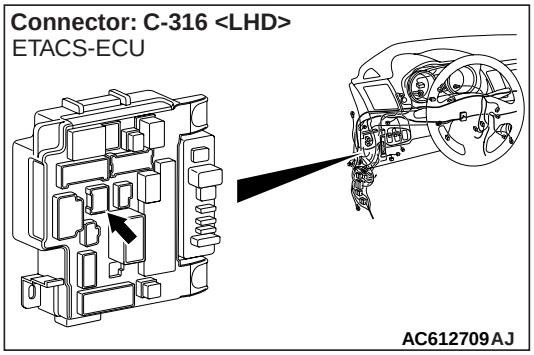

AC612709AJ

Connector: D-07

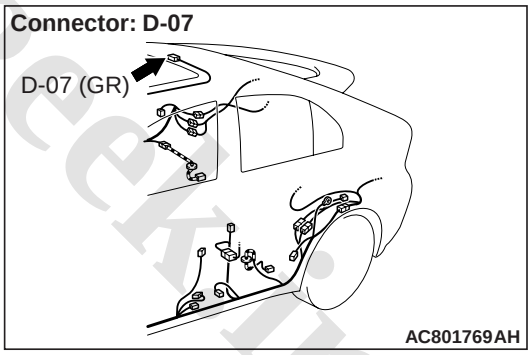

AC801769AH

Connector: C-316 <RHD>
ETACS-ECU

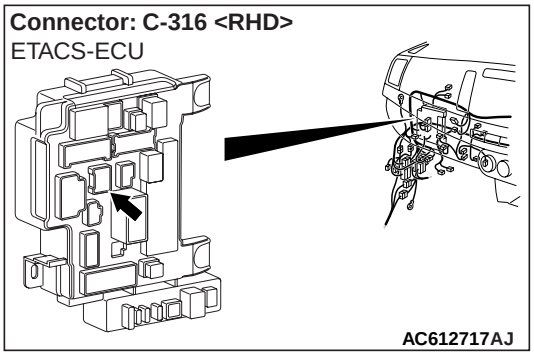

AC612717AJ

OPERATION

The ETACS-ECU illuminates and extinguishes the rear room lamp in accordance with the input signals below.

- Ignition switch (IG1)
- Key reminder switch
- Door switches
- Front door lock actuator (driver's side)

COMMENTS ON TROUBLE SYMPTOM

If this does not work normally, the above switch input circuit(s), rear room lamp, or ETACS-ECU may have a problem.

www.cargeek.ir

www.CarGeek.ir

PROBABLE CAUSES

- Malfunction of the key reminder switch
- Malfunction of door switch
- Malfunction of the front door lock actuator (driver's side)
- Malfunction of rear room lamp
- Malfunction of the ETACS-ECU
- Damaged harness wires and connectors

DIAGNOSIS PROCEDURE

STEP 1. Front room lamp operation check

Check that the front room lamp illuminates and extinguishes normally.

Q: Is the check result normal?

YES : Go to Step 2.
NO : Refer to Inspection Procedure 1 "The front room lamp does not illuminate normally." .

STEP 2. Connector check: D-07 rear room lamp connector

Q: Is the check result normal?

YES : Go to Step 3.
NO : Repair the defective connector.

STEP 3. Rear room lamp bulb check

Check that the rear room lamp bulb is normal.

Q: Is the check result normal?

YES : Go to Step 4.
NO : Replace the rear room lamp bulb.

STEP 4. Connector check: C-316 ETACS-ECU connector

Q: Is the check result normal?

YES : Go to Step 5.
NO : Repair the defective connector.

STEP 5. Wiring harness check between the D-07 rear room lamp connector terminal No. 1/2 and the C-316 ETACS-ECU connector terminal No. 6/5

- Check the input/output line for open circuit.

Q: Is the check result normal?

YES : Go to Step 6.
NO : Repair the wiring harness.

STEP 6. Retest the system

Check that the rear room lamp illuminates/extinguishes normally.

Q: Is the check result normal?

YES : The trouble can be an intermittent malfunction (Refer to GROUP 00 – How to use Troubleshooting/inspection Service Points – How to Cope with Intermittent Malfunction).
NO : Replace the rear room lamp.

Inspection Procedure 3: The luggage compartment lamp does not illuminate normally.

⚠ CAUTION

Whenever the ECU is replaced, ensure that the power supply circuit, the earth circuit and the communication circuit are normal.

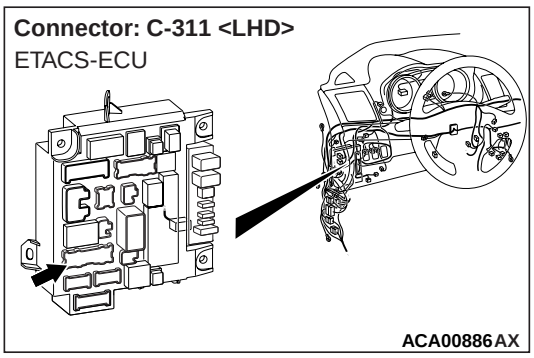

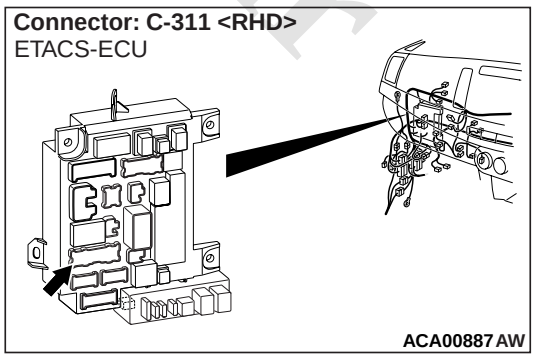

www.cargeek.ir

www.CarGeek.ir

Connector: F-01 <LANCER>

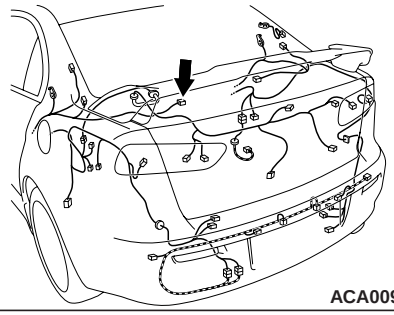

Connector: F-01 <LANCER SPORTBACK>

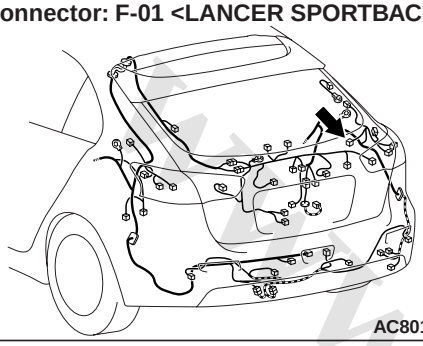

OPERATION

The ETACS-ECU illuminates and extinguishes the luggage compartment lamp in accordance with the input signals from trunk lid latch <LANCER> or tailgate switch <LANCER SPORTBACK>.

COMMENTS ON TROUBLE SYMPTOM

If this does not work normally, the trunk lid latch <LANCER> or tailgate switch <LANCER SPORTBACK> input circuit, luggage compartment lamp, or ETACS-ECU may have a problem.

PROBABLE CAUSES

- Malfunction of trunk lid latch <LANCER> or tailgate switch <LANCER SPORTBACK>
- Malfunction of luggage compartment lamp
- Malfunction of the ETACS-ECU
- Damaged harness wires and connectors

DIAGNOSIS PROCEDURE

STEP 1. M.U.T.-III diagnosis code

Check if diagnosis code is set to the ETACS-ECU.

Q: Is the diagnosis code set?

YES : Troubleshoot the ETACS-ECU. Refer to .
NO <LANCER> : Go to Step 2.
NO <LANCER SPORTBACK> : Go to Step 7.

STEP 2. M.U.T.-III data list

Use the ETACS-ECU service data to check the signals related to the operation of luggage compartment lamp.

- Open the trunk lid.

Item No.	Item name	Normal condition
Item 260	Trunk/gate trunk ajar switch	Open

OK: Normal condition is displayed.

Q: Is the check result normal?

YES : Go to Step 3.
NO : Troubleshoot the ETACS-ECU. Refer to Inspection Procedure 9 "The trunk lid latch signal is not received" .

STEP 3. Connector check: F-01 luggage compartment lamp connector

Q: Is the check result normal?

YES : Go to Step 4.
NO : Repair the defective connector.

STEP 4. Luggage compartment lamp bulb check

Check that the luggage compartment lamp bulb is normal.

Q: Is the check result normal?

YES : Go to Step 5.
NO : Replace the luggage compartment lamp bulb.

STEP 5. Connector check: C-311 ETACS-ECU connector

Q: Is the check result normal?

YES : Go to Step 6.
NO : Repair the defective connector.

STEP 6. Wiring harness check between the F-01 luggage compartment lamp connector terminal No. 1/2 and the C-311 ETACS-ECU connector terminal No. 17/3

NOTE: Before the wiring harness check, check the intermittent connector D-17, and repair that if necessary.

- Check the input/output line for open circuit.

Q: Is the check result normal?

YES : Go to Step 12.
NO : Repair the wiring harness.

www.cargeek.ir

www.CarGeek.ir

STEP 7. M.U.T.-III data list

Use the ETACS-ECU service data to check the signals related to the operation of luggage compartment lamp.

- Open the tailgate.

Item No.	Item name	Normal condition
Item 260	Trunk/gate trunk ajar switch	Open

OK: Normal condition is displayed.

Q: Is the check result normal?
YES : Go to Step 8.
NO : Troubleshoot the ETACS-ECU. Refer to Inspection Procedure 9 "The tailgate switch signal is not received" .

STEP 8. Connector check: F-01 luggage compartment lamp connector

Q: Is the check result normal?
YES : Go to Step 9.
NO : Repair the defective connector.

STEP 9. Luggage compartment lamp bulb check

Check that the luggage compartment lamp bulb is normal.

Q: Is the check result normal?
YES : Go to Step 10.
NO : Replace the luggage compartment lamp bulb.

STEP 10. Connector check: C-311 ETACS-ECU connector

Q: Is the check result normal?
YES : Go to Step 11.
NO : Repair the defective connector.

STEP 11. Wiring harness check between the F-01 luggage compartment lamp connector terminal No. 1/3 and the C-311 ETACS-ECU connector terminal No. 3/17

NOTE: Before the wiring harness check, check the intermittent connector D-12, and repair that if necessary.

- Check the input/output line for open circuit.

Q: Is the check result normal?
YES : Go to Step 12.
NO : Repair the wiring harness.

STEP 12. Retest the system

Check that the luggage compartment lamp illuminates and extinguishes normally.

Q: Is the check result normal?
YES : The trouble can be an intermittent malfunction (Refer to GROUP 00 – How to use Troubleshooting/inspection Service Points – How to Cope with Intermittent Malfunction).
NO : Replace the ETACS-ECU.

Inspection Procedure 4: The interior lamp automatic shutoff function does not work normally.

COMMENTS ON TROUBLE SYMPTOM

The ETACS-ECU operates the interior lamp automatic shutoff function in accordance with the input signals below.

- Ignition switch (ACC)
- Ignition switch (IG1)
- Door switches

If this function does not work normally, these input signal circuit(s) or the ETACS-ECU may have a problem. Also, "Interior lamp auto cut timer" may be set to "Disable" through customisation.

PROBABLE CAUSES

- Malfunction of door switch
- Malfunction of the room lamp
- Malfunction of the ETACS-ECU
- Damaged harness wires and connectors

DIAGNOSIS PROCEDURE

STEP 1. Customise function check

Use the ETACS-ECU customise function to check to see which of the followings other than "Disable" the "Interior lamp auto cut timer" is set.

- 3 minutes
- 30 minutes
- 60 minutes

Q: Is the check result normal?
YES : Go to Step 2.
NO : Use the ETACS-ECU customise function to set the "Interior lamp auto cut timer" to other than "Disable" (Refer to).

www.cargeek.ir

STEP 2. M.U.T.-III diagnosis code

Check if diagnosis code is set to the ETACS-ECU.

Q: Is the diagnosis code set?

YES : Troubleshoot the ETACS-ECU. Refer to .

NO : Go to Step 3.

STEP 3. M.U.T.-III data list

Use the ETACS-ECU service data to check the signals related to the interior lamp automatic shutoff function.

- Turn the ignition switch to the LOCK (OFF) position.
- Open each door.

Item No.	Item name	Normal condition
Item 254	IG voltage	1 V or less
Item 288	ACC switch	OFF
Item 256	Dr door ajar switch	Open
Item 257	As door ajar switch	Open
Item 258	RR door ajar switch	Open
Item 259	RL door ajar switch	Open

OK: Normal conditions are displayed for all the items.

Q: Is the check result normal?

Normal conditions are displayed for all the items. : Go to Step 4.

Normal condition is not displayed for item No. 254. : Troubleshoot the ETACS-ECU. Refer to Inspection Procedure 2 "The ignition switch (IG1) signal is not received" .

Normal condition is not displayed for item No. 288. : Troubleshoot the ETACS-ECU. Refer to Inspection Procedure 1 "The ignition switch (ACC) signal is not received" .

Normal condition is not displayed for item No. 256. : Troubleshoot the ETACS-ECU. Refer to Inspection Procedure 5 "The front door switch (driver's side) signal is not received" .

Normal condition is not displayed for item No. 257. : Troubleshoot the ETACS-ECU. Refer to Inspection Procedure 6 "The front door switch (passenger's side) signal is not received" .

Normal condition is not displayed for item No. 258. : Troubleshoot the ETACS-ECU. Refer to Inspection Procedure 7 "The rear door switch (RH) signal is not received" .

Normal condition is not displayed for item No. 259. : Troubleshoot the ETACS-ECU. Refer to Inspection Procedure 8 "The rear door switch (LH) signal is not received" .

STEP 4. Retest the system

Check that the interior lamp automatic shutoff function works normally.

Q: Is the check result normal?

YES : The trouble can be an intermittent malfunction (Refer to GROUP 00 – How to use Troubleshooting/inspection Service Points – How to Cope with Intermittent Malfunction).

NO : Replace the ETACS-ECU.

ON-VEHICLE SERVICE

CUSTOMISE FUNCTION

M1541301200552

By operating the M.U.T.-III ETACS system or MMCS <Vehicles for Russia>, the following functions can be customised. The programmed information is held even when the battery is disconnected.

www.cargeek.ir

www.CarGeek.ir

Adjustment item (M.U.T.-III display)	Adjustment item	Adjusting content (M.U.T.-III display)	Adjusting content
Room lamp delay timer with door	Adjustment of interior lamp delay shutdown time	0 sec	0 second (no delay shutdown time)
		7.5 sec	7.5 seconds
		15 sec	15 seconds (initial condition)
		30 sec	30 seconds
		60 sec	60 seconds
		120 sec	120 seconds
		180 sec	180 seconds
Interior lamp auto cut timer	Adjustment of interior lamp automatic shutdown function operation time	Disable	No function
		3 min	3 minutes
		30 min	30 minutes (initial condition)
		60 min	60 minutes

ROOM LAMP REMOVAL AND INSTALLATION

M1541302700196

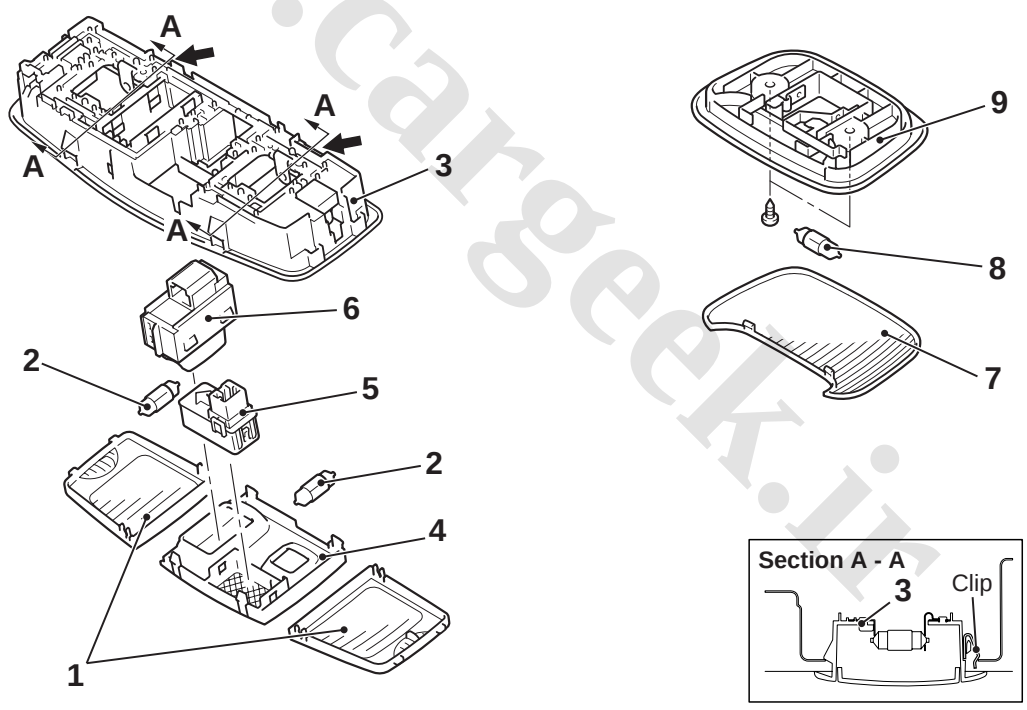

Note
: Clip positions

AC610643AB

Removal Steps

1. Front room lamp lens
2. Room lamp bulb

<<**A**>>

3. Front room lamp
4. Front room lamp cover
5. Microphone unit <Vehicles with hands free ECU>

Removal Steps (Continued)

6. Sunroof switch <Vehicles with sunroof>
7. Rear room lamp lens
8. Room lamp bulb
9. Rear room lamp

www.cargeek.ir

www.CarGeek.ir

REMOVAL SERVICE POINT

<<A>> FRONT ROOM LAMP REMOVAL

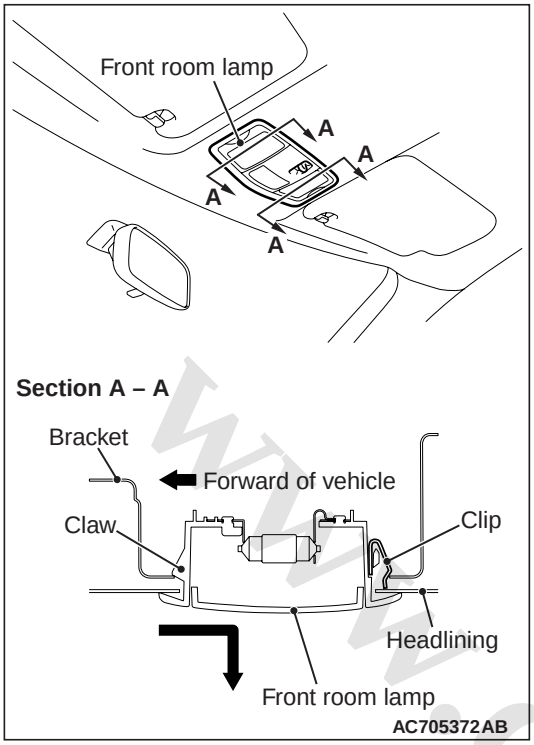

While pressing the front room lamp toward the rear of the vehicle, slide the front side of the front room lamp downward, and remove the front room lamp.

LUGGAGE COMPARTMENT LAMP REMOVAL AND INSTALLATION

M1541302600166

<LANCER>

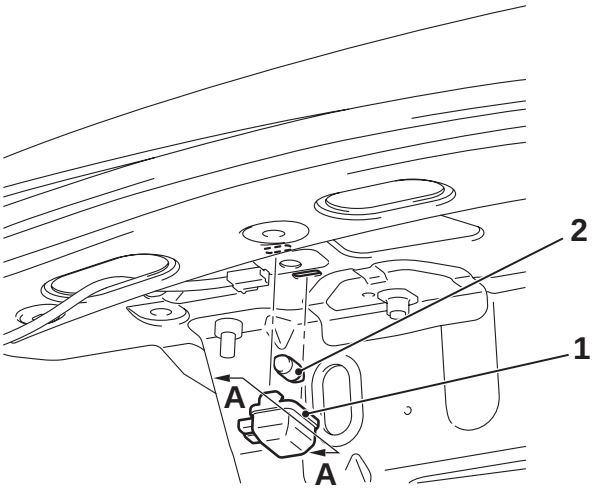

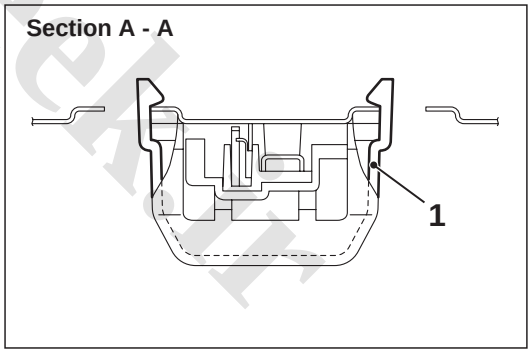

AC610327AB

Removal Steps

1. Luggage compartment lamp lens
2. Luggage compartment lamp bulb

www.cargeek.ir

www.CarGeek.ir

<LANCER SPORTBACK>

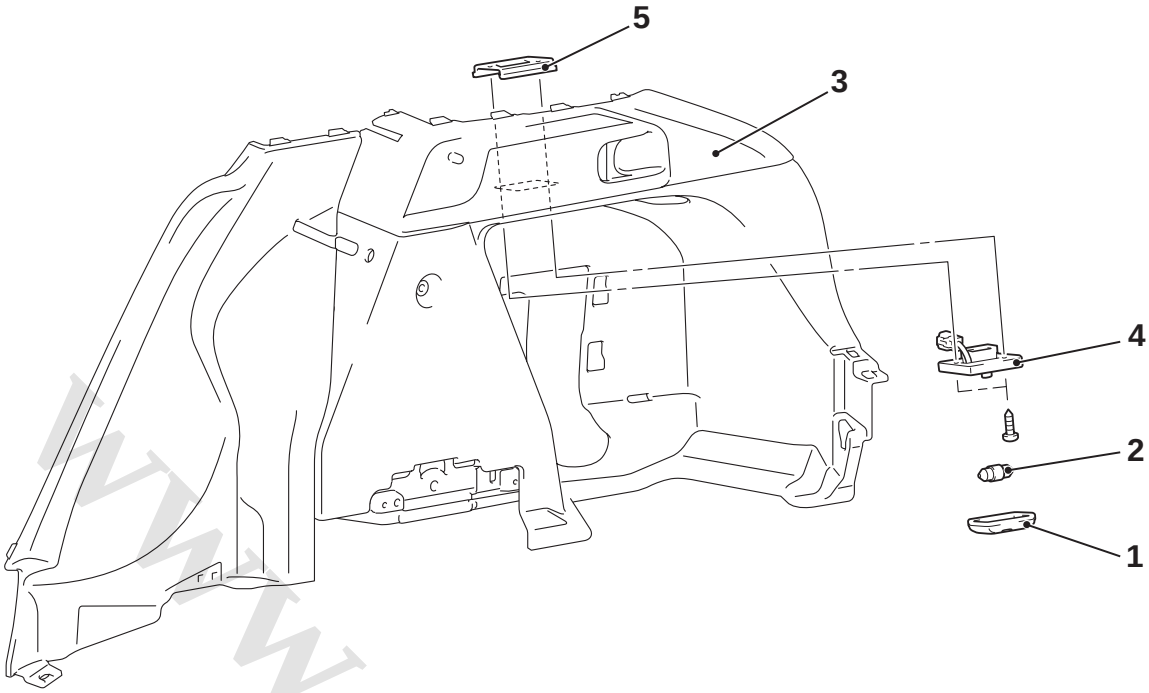

AC802120AB

Removal Steps

1. Cargo room lamp lens (luggage compartment lamp lens)
2. Cargo room lamp bulb (luggage compartment lamp bulb)
3. Quarter trim (Refer to GROUP 52A, Interior Trim).

Removal Steps (Continued)

4. Cargo room lamp (luggage compartment lamp)
5. Cargo room lamp bracket (luggage compartment lamp bracket)

www.cargeek.ir

www.CarGeek.ir

HIGH-MOUNTED STOP LAMP

REMOVAL AND INSTALLATION

M1541700200502

<LANCER>

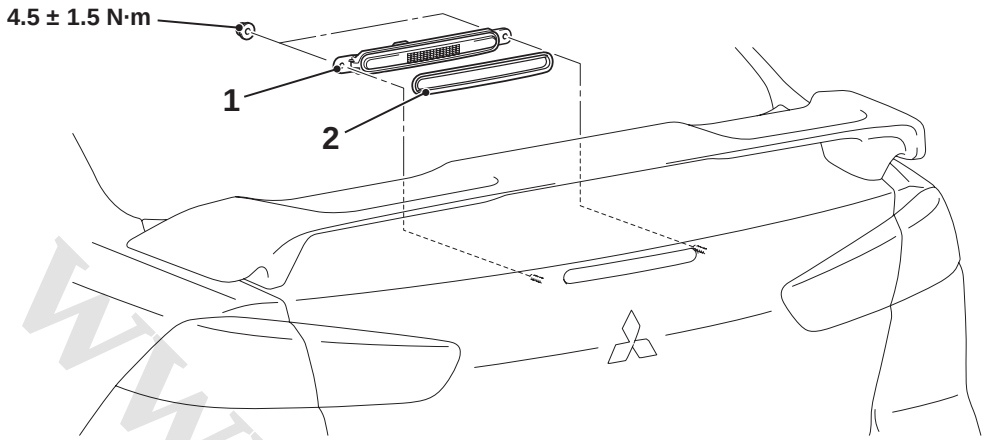

AC609978AB

Removal Steps

- Trunk lid trim
1. High-mounted stop lamp assembly
2. Gasket

<LANCER SPORTBACK>

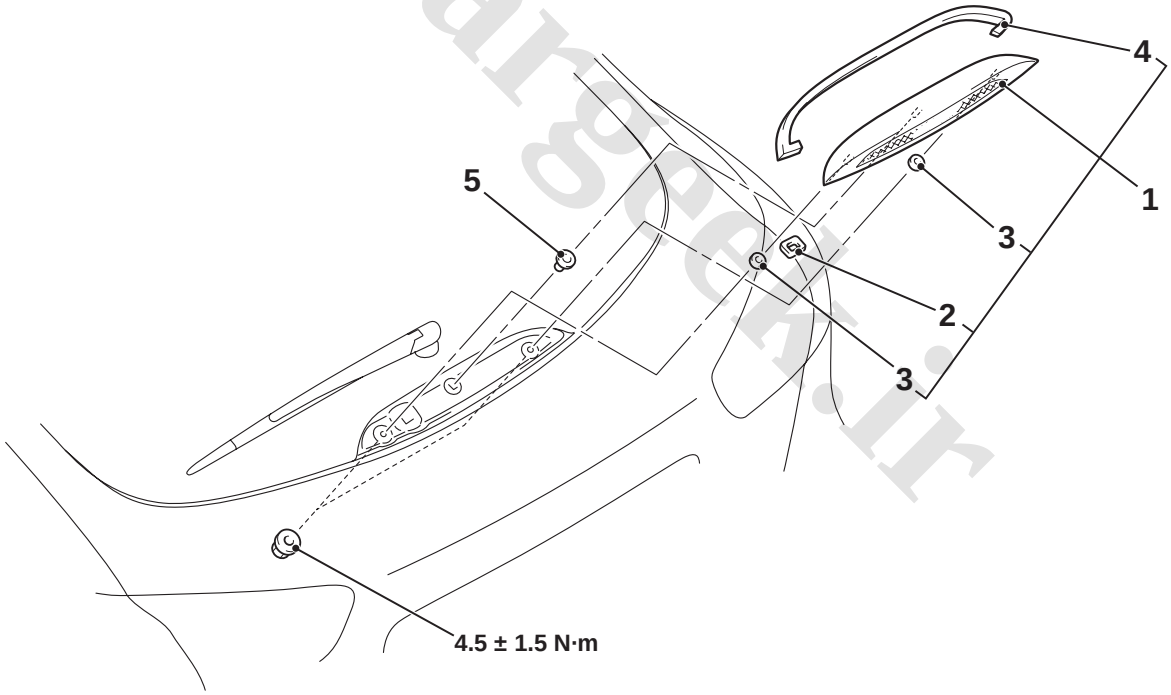

AC802360AB

Removal Steps

- Tailgate lower trim (Refer to GROUP 52A, Tailgate Trim).
1. High-mounted stop lamp assembly
2. Gasket

Removal Steps (Continued)

3. Gasket
4. Gasket
5. Grommet

www.cargeek.ir

www.CarGeek.ir

LICENCE PLATE LAMP

REMOVAL AND INSTALLATION

M1541900200432

<LANCER>

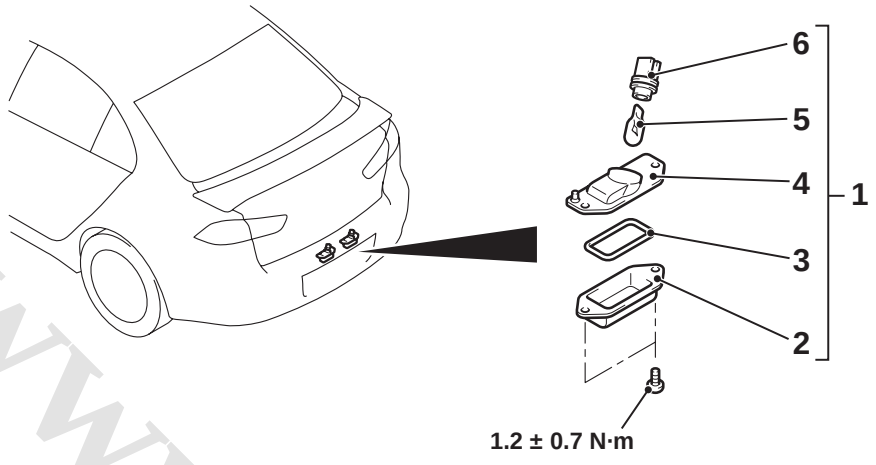

Removal Steps

1. Licence plate lamp assembly
2. Lens
3. Gasket
4. Body

Removal Steps (Continued)

5. Bulb
6. Socket

<LANCER SPORTBACK>

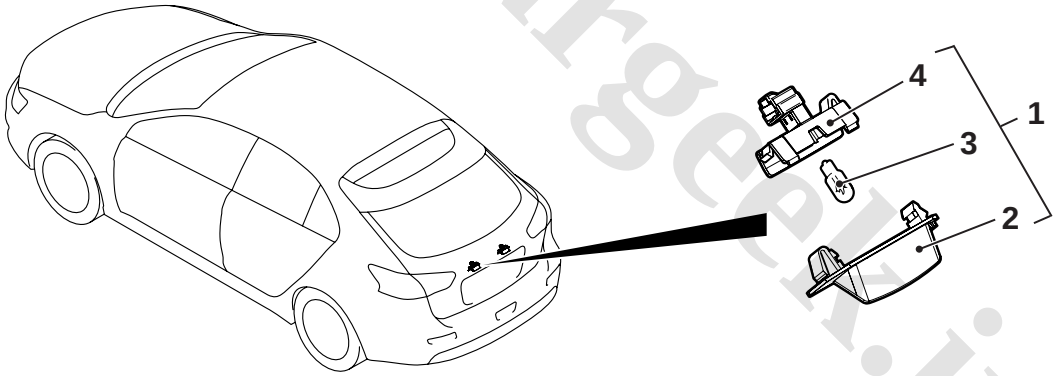

Removal Steps

<<A>>

1. Licence plate lamp assembly
2. Lens

Removal Steps (Continued)

3. Bulb
4. Socket

www.cargeek.ir

www.CarGeek.ir

REMOVAL SERVICE POINT

<<A>> LICENCE PLATE LAMP REMOVAL

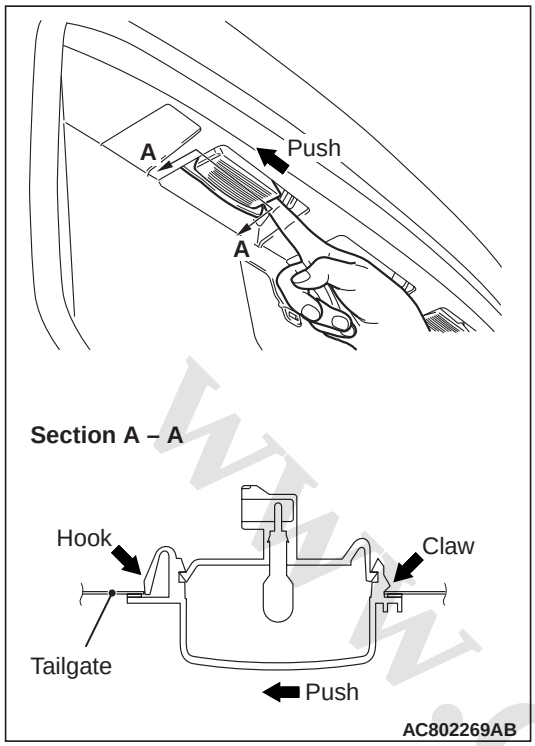

Push the licence plate lamp to the left to bend the hook, and then remove by disengaging the tab from the tailgate.

www.cargeek.ir

www.cargeek.ir

www.CarGeek.ir

HAZARD WARNING LAMP SWITCH

SPECIAL TOOLS

M1541500100170

www.cargeek.ir

www.cargeek.ir

www.CarGeek.ir

Tool	Number	Name	Use
a 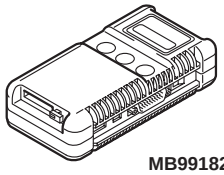 MB991824 b 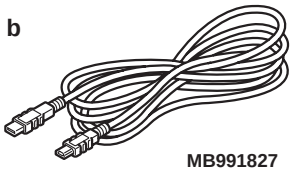 MB991827 c 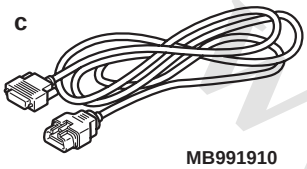 MB991910 d 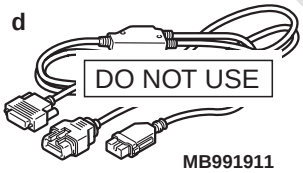 DO NOT USE MB991911 e 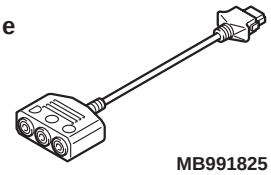 MB991825 f 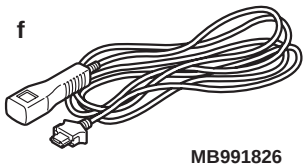 MB991826 MB991955	MB991955 a. MB991824 b. MB991827 c. MB991910 d. MB991911 e. MB991825 f. MB991826	M.U.T.-III sub-assembly a. Vehicle Communication Interface (V.C.I.) b. M.U.T.-III USB cable c. M.U.T.-III main harness A (Vehicles with CAN communication system) d. M.U.T.-III main harness B (Vehicles without CAN communication system) e. M.U.T.-III measure adapter f. M.U.T.-III trigger harness	⚠ CAUTION **For vehicles with CAN communication, use M.U.T.-III main harness A to send simulated vehicle speed. If you connect M.U.T.-III main harness B instead, the CAN communication does not function correctly.** Diagnosis code, service data and actuator test check.
a 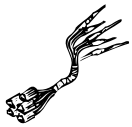 b 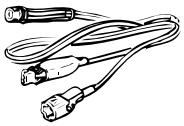 c 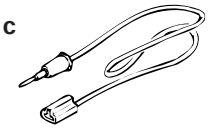 d DO NOT USE MB991223	MB991223 a. MB991219 b. MB991220 c. MB991221 d. MB991222	Harness set a. Check harness b. LED harness c. LED harness adapter d. Probe	Continuity check and voltage measurement at harness wire or connector a. For checking connector pin contact pressure b. For checking power supply circuit c. For checking power supply circuit d. For connecting a locally sourced tester

www.cargeek.ir

www.CarGeek.ir

Tool	Number	Name	Use
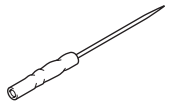 MB992006	MB992006	Extra fine probe	Continuity check and voltage measurement at harness wire or connector

TROUBLESHOOTING

STANDARD FLOW OF DIAGNOSTIC TROUBLESHOOTING

M1541501400141

Refer to GROUP 00 – Contents of troubleshooting .

DIAGNOSIS FUNCTION

M1541500600090

HOW TO READ DIAGNOSIS CODE

Refer to GROUP 00 – Diagnosis function .

HOW TO ERASE DIAGNOSIS CODE

Refer to GROUP 00 – Diagnosis function .

DIAGNOSIS CODE CHART

M1541500200081

⚠ CAUTION

On troubleshooting, if the ignition switch is turned ON while disconnecting connector(s), diagnosis code(s) associated with other system may be set. On completion, confirm all systems for diagnosis code(s). If diagnosis code(s) are set, erase them all.

Diagnosis code No.	Diagnostic item	Reference page
B16A6	Hazard warning lamp blown fuse	

DIAGNOSIS CODE PROCEDURES

Code No.B16A6 Hazard warning lamp blown fuse

DIAGNOSTIC FUNCTION

When the hazard warning lamp fuse is blown, the ETACS-ECU sets the diagnosis code No. B16A6.

JUDGEMENT CRITERIA

With the diagnosis code not set, when the blown fuse of hazard warning lamp is detected three times consecutively, the ETACS-ECU sets the diagnosis code No. B16A3.

PROBABLE CAUSES

- Damaged harness wires and connectors
- Malfunction of the ETACS-ECU

DIAGNOSIS PROCEDURE

STEP 1. Fuse check

Check if the turn-signal lamp fuse is normal.

Q: Is the check result normal?

YES : Go to Step 2.
NO : Replace the turn-signal lamp fuse.

STEP 2. Check whether the diagnosis code is reset.

(1) Erase the diagnosis code.
(2) Turn the ignition switch from "LOCK" (OFF) position to "ON" position.
(3) Check if diagnosis code is set.

Q: Is the diagnosis code set?

YES : Replace the ETACS-ECU.
NO : The diagnosis is complete.

www.cargeek.ir

www.CarGeek.ir

TROUBLE SYMPTOM CHART

M1541500700268

Trouble symptom	Inspection Procedure No.	Reference page
The hazard warning lamps do not illuminate.	1	
The ESS (Emergency Stop signal System) function does not work normally.	2	

SYMPTOM PROCEDURES

Inspection Procedure 1: The hazard warning lamps do not illuminate.

⚠ CAUTION

Before replacing the ECU, ensure that the power supply circuit, the earth circuit and the communication circuit are normal.

COMMENTS ON TROUBLE SYMPTOM

If the hazard warning lamps do not illuminate, the hazard warning lamp switch input circuit in centre panel unit or the ETACS-ECU may have a problem.

PROBABLE CAUSES

- Malfunction of centre panel unit
- Malfunction of the ETACS-ECU
- Damaged harness wires and connectors

DIAGNOSIS PROCEDURE

STEP 1. Check that the turn-signal lamps operate.

Check that the turn-signal lamps illuminate normally.

Q: Is the check result normal?

YES : Go to Step 2.

NO : Diagnose the headlamps. Refer to Inspection Procedure 10 "The turn-signal lamps do not illuminate" .

STEP 2. M.U.T.-III data list

Using the ETACS-ECU service data, check the hazard warning lamp signal.

- Turn ON the hazard lamp switch.

Item No.	Item name	Normal condition
Item 265	Hazard switch	ON

OK: Normal condition is displayed.

Q: Is the check result normal?

YES : Go to Step 3.

NO : Troubleshoot the ETACS-ECU. Refer to Inspection Procedure 10 "The hazard warning lamp switch signal is not received" .

STEP 3. Retest the system

Check that the hazard warning lamps illuminate normally.

Q: Is the check result normal?

YES : The trouble can be an intermittent malfunction (Refer to GROUP 00 – How to use Troubleshooting/inspection Service Points – How to Cope with Intermittent Malfunction).

NO : Replace the ETACS-ECU.

Inspection Procedure 2: The ESS (Emergency Stop signal System) function does not work normally.

⚠ CAUTION

Whenever the ECU is replaced, ensure that the power supply circuit, the earth circuit and the communication circuit are normal.

COMMENTS ON TROUBLE SYMPTOM

If the ESS (Emergency Stop signal System) function does not work normally, ETACS-ECU, ABS-ECU or ASC-ECU may be defective. Also, the ESS does not work when the hazard warning lamps illuminate.

PROBABLE CAUSES

- Malfunction of the ETACS-ECU
- Malfunction of the ABS-ECU
- Malfunction of the ASC-ECU

www.cargeek.ir

www.CarGeek.ir

DIAGNOSIS PROCEDURE

STEP 1. Check the hazard warning lamps.
Check that the hazard warning lamps illuminate when the hazard warning lamp switch is turned ON.

Q: Is the check result normal?
YES : Go to Step 2.
NO : Refer to Inspection Procedure 1 "The hazard warning lamps do not illuminate" .

STEP 2. M.U.T.-III other system diagnosis code
Check if diagnosis code is set to the ABS-ECU or ASC-ECU.

Q: Is the diagnosis code set to the any of the above?
Set to the ABS-ECU. : Troubleshoot the ABS. Refer to GROUP 35B – Troubleshooting .
Set to the ASC-ECU. : Troubleshoot the ASC. Refer to GROUP 35C – Troubleshooting .
The diagnosis code is not set. : Go to Step 3.

STEP 3. M.U.T.-III other system actuator test

ABS-ECU or ASC-ECU
- Item 10: ESS test mode (Refer to <ABS> or <ASC>).

OK: The ESS function operates.

Q: Is the check result normal?
YES : Go to Step 4.
NO : Replace the ABS-ECU or ASC-ECU.

STEP 4. Retest the system
Check that the ESS function works normally.

Q: Is the check result normal?
YES : The trouble can be an intermittent malfunction (Refer to GROUP 00 – How to use Troubleshooting/inspection Service Points – How to Cope with Intermittent Malfunction).
NO : Go to Step 1.

REMOVAL AND INSTALLATION

M1541501000198

Refer to GROUP 52A – Instrument Centre Panel .

INSPECTION

HAZARD WARNING LAMP SWITCH CHECK

M1541501100247

Using the M.U.T.-III, check the data list of ETACS. It is judged normal if the display turns ON when the hazard warning lamp switch is pressed, or OFF when not pressed for the item No. 265: Hazard switch.

HORN

REMOVAL AND INSTALLATION

M1542100201119

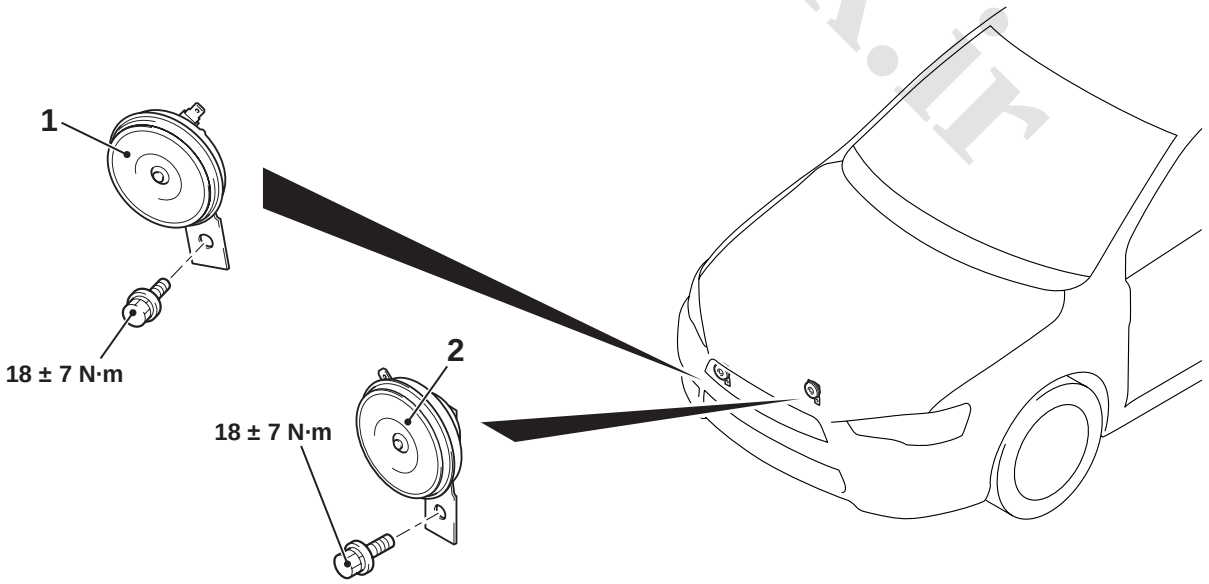

AC801676AB

www.cargeek.ir

www.CarGeek.ir

Removal Steps

- Front bumper and radiator grille assembly (Refer to GROUP 51 – Front Bumper Assembly and Radiator Grille).

>>**A**<< 1. Horn (HIGH)

>>**A**<< 2. Horn (LOW)

INSTALLATION SERVICE POINT

>>A<< HORN (LOW)/HORN (HIGH) INSTALLATION

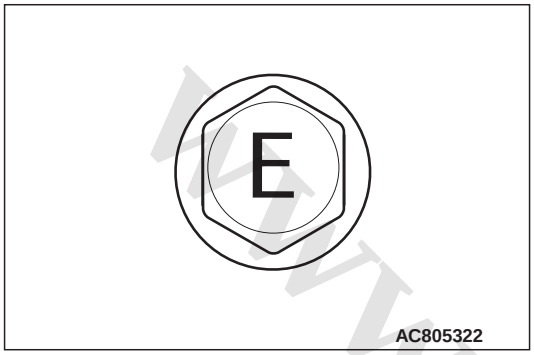

Use the earth bolts as the mounting bolts for horn (LOW) and horn (HIGH). The earth bolts have "E" mark on the bolt heads.

INSPECTION

HORN RELAY CHECK

M1542100400693

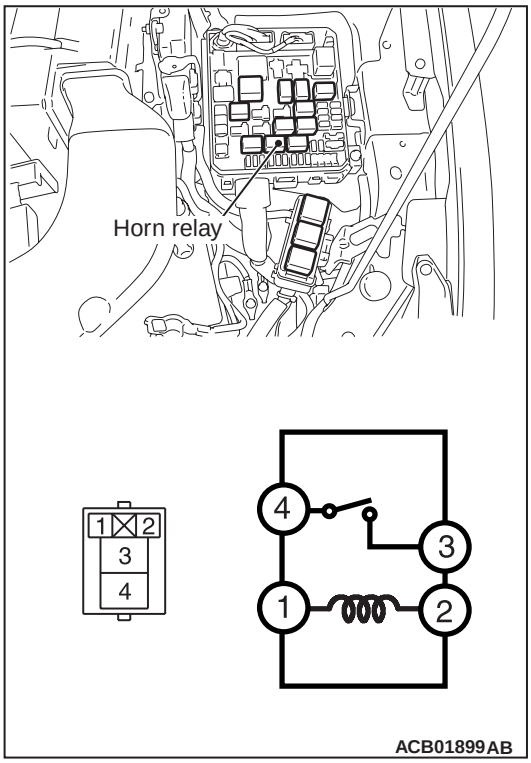

Battery voltage	Terminal number	Normal condition
At no energisation	3 – 4	No continuity
With current supply [terminal 1 (+), terminal 2 (–)]		Continuity exists (2 ohms or less)

www.cargeek.ir

www.CarGeek.ir

REVERSING SENSOR SYSTEM

SPECIAL TOOLS

M1540701900147

www.cargeek.ir

www.cargeek.ir

www.CarGeek.ir

Tool	Number	Name	Use
a 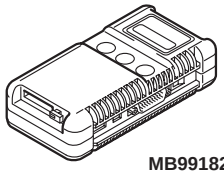 MB991824 b 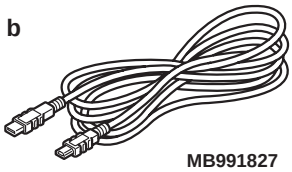 MB991827 c 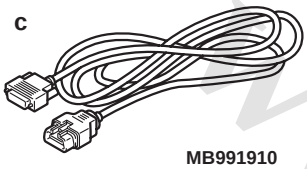 MB991910 d 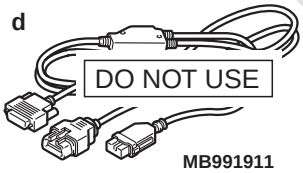 DO NOT USE MB991911 e 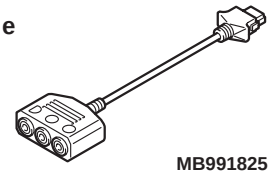 MB991825 f 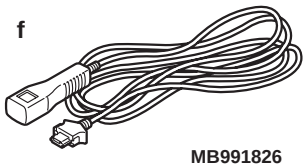 MB991826 MB991955	MB991955 a. MB991824 b. MB991827 c. MB991910 d. MB991911 e. MB991825 f. MB991826	M.U.T.-III sub-assembly a. Vehicle communication interface (V.C.I.) b. M.U.T.-III USB cable c. M.U.T.-III main harness A (for vehicles with CAN communication) d. M.U.T.-III main harness B (for vehicles without CAN communication) e. Measuring adapter harness f. M.U.T.-III trigger harness	⚠ CAUTION **For vehicles with CAN communication, use M.U.T.-III main harness A to send the simulated vehicle speed. If you connect M.U.T.-III main harness B instead, CAN communication does not function correctly.** M.U.T.-III diagnosis code display
a 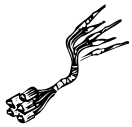 b 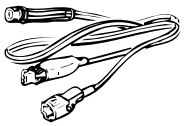 c 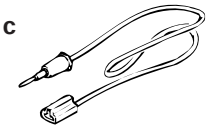 d DO NOT USE MB991223	MB991223 a. MB991219 b. MB991220 c. MB991221 d. MB991222	Harness set a. Check harness b. LED harness c. LED harness adapter d. Probe	Continuity check and voltage measurement at harness wire or connector a. For checking connector pin contact pressure b. For checking power supply circuit c. For checking power supply circuit d. For connecting a locally sourced tester

www.cargeek.ir

www.CarGeek.ir

Tool	Number	Name	Use
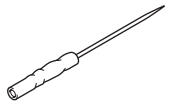 MB992006	MB992006	Extra fine probe	Continuity check and voltage measurement at harness wire or connector

TROUBLESHOOTING

STANDARD FLOW OF DIAGNOSTIC TROUBLESHOOTING

M1540700600079

Refer to GROUP 00 – Contents of troubleshooting .

DIAGNOSIS FUNCTION

M1540700500038

FAIL-SAFE FUNCTION

1. When the ultrasonic noise is received, the bass toned buzzer sound continuously. When the ultrasonic noise stops, the normal operation will be resumed immediately.
2. When the abnormality such as the open circuit of a sensor occurs, the sensor turns OFF and the high toned buzzer sounds for 5 seconds. When the normal signal is received, the normal state will be resumed.
3. When an abnormality occurs in the sensor, the reversing sensor indicator keeps flashing with 0.8-second interval until the system returns to the normal condition. However, if the system is turned OFF by using the switch, the indicator stops its flashing.

DIAGNOSIS CODE CHART

M1544300700014

⚠ CAUTION

During diagnosis, a diagnosis code associated with other system may be set when the ignition switch is turned on with connector(s) disconnected. On completion, confirm all systems for diagnosis code(s). If diagnosis code(s) are set, erase them all.

Diagnosis code No.	Diagnosis item	Reference page
B252E	Rear corner sensor (RH) wire disconnection	
B2530	Rear corner sensor (LH) wire disconnection	
B2532	Back sensor (RH) wire disconnection	
B2534	Back sensor (LH) wire disconnection	
B252F	Rear corner sensor (RH) error	
B2531	Rear corner sensor (LH) error	
B2533	Back sensor (RH) error	
B2535	Back sensor (LH) error	
U0001	Bus off (CAN-C)	
U0100*	Engine-ECU CAN timeout	
U0121*	ASC/ABS-ECU CAN timeout	
U0141*	ETACS-ECU CAN timeout	

NOTE: With the troubleshooting indicated with "", the ON/OFF switch indicator or buzzer sound will not be activated.*

www.cargeek.ir

www.CarGeek.ir

DIAGNOSIS CODE PROCEDURES

Code No. B252E Rear corner sensor (RH) wire disconnection
Code No. B2530 Rear corner sensor (LH) wire disconnection
Code No. B2532 Back sensor (RH) wire disconnection
Code No. B2534 Back sensor (LH) wire disconnection

⚠ CAUTION
Before replacing the ECU or sensor, ensure that the power supply circuit, the earth circuit and the communication circuit are normal.

Corner Sensor/Back Sensor Circuit

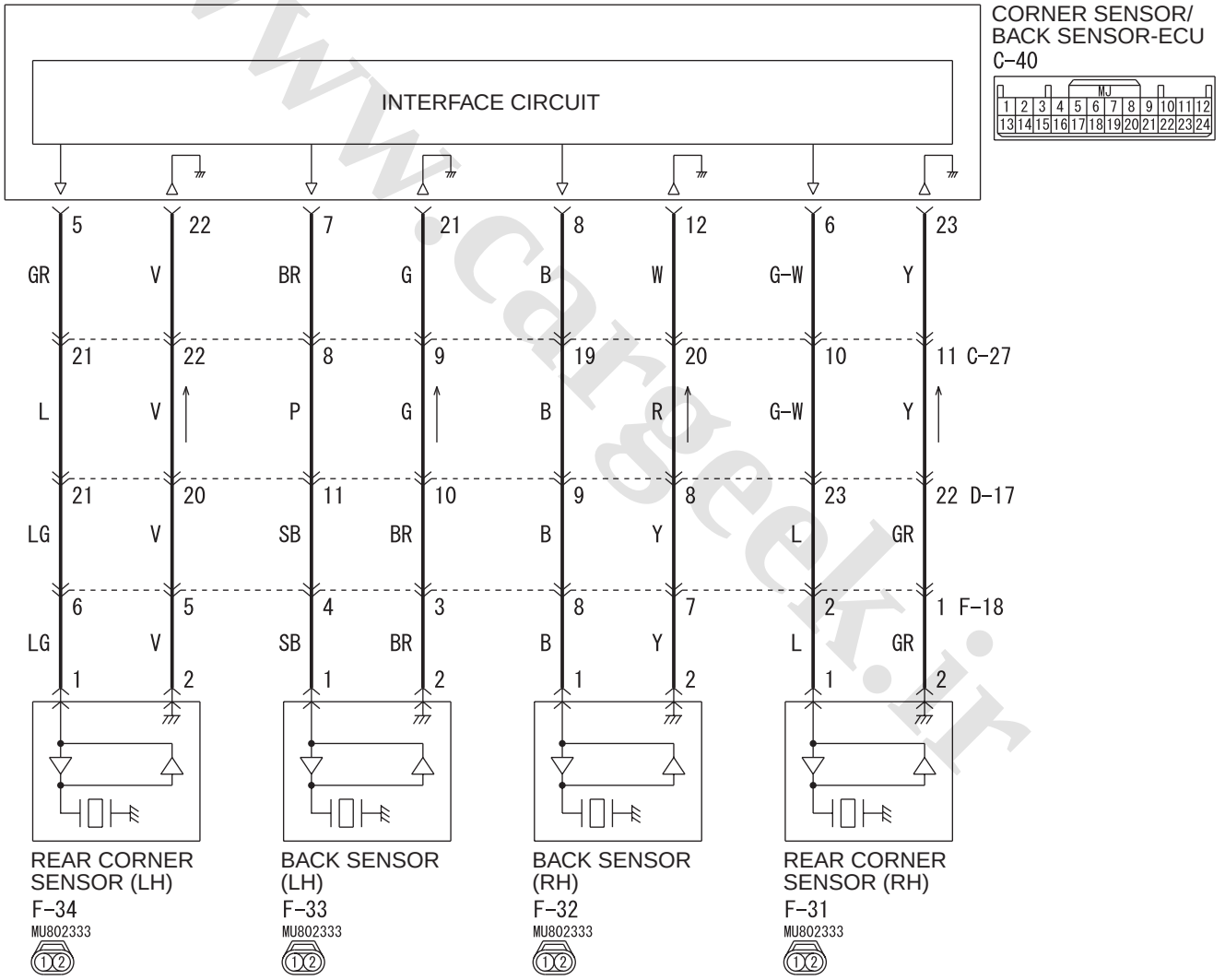

Wire colour code
B : Black LG : Light green G : Green L : Blue W : White Y : Yellow SB : Sky blue
BR : Brown O : Orange GR : Grey R : Red P : Pink V : Violet PU : Purple SI : Silver

WDH54E005A

www.cargeek.ir

www.CarGeek.ir

Connector: C-40

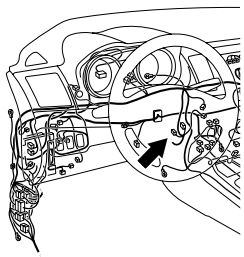

ACB02645AQ

Connectors: F-31, F-32, F-33, F-34 <LANCER>

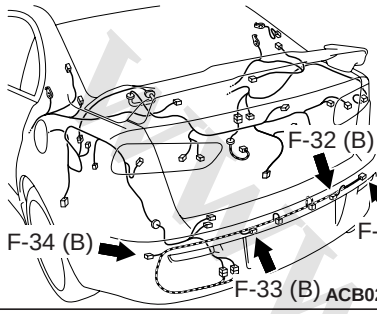

ACB02748AC

Connectors: F-31, F-32, F-33, F-34 <LANCER SPORTBACK>

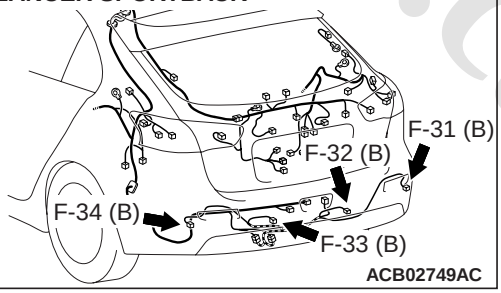

ACB02749AC

DIAGNOSTIC FUNCTION

- During the transmission/reception operation of each sensor, when the corner sensor/back sensor-ECU detects an open circuit abnormality between the sensor and corner sensor/back sensor-ECU, the ECU sets one of the diagnosis codes No. B252E, No. B2530, No. B2532, and No. 2534.

TROUBLESHOOTING HINT

- Damaged harness wires and connectors
- Sensor malfunction
- Malfunction of corner sensor/back sensor-ECU

DIAGNOSIS PROCEDURE

STEP 1. Check the following connectors.

Check the following connectors:

- F-31 Rear corner sensor (RH) connector
- F-34 Rear corner sensor (LH) connector
- F-32 Back sensor (RH) connector
- F-33 Back sensor (LH) connector
- C-40 corner sensor/back sensor-ECU connector

Q: Are all the connectors in good condition?
YES : Go to Step 2.
NO : Repair the defective connector.

STEP 2. Check the following wiring harness.

Check the wiring harness for open circuit between the following connectors:

- Wiring harness from F-31 Rear corner sensor (RH) connector terminal No. 1, 2 to C-40 corner sensor/back sensor-ECU connector terminal No. 6, 23.
- Wiring harness from F-34 Rear corner sensor (LH) connector terminal No. 1, 2 to C-40 corner sensor/back sensor-ECU connector terminal No. 5, 22.
- Wiring harness from F-32 Back sensor (RH) connector terminal No. 1, 2 to C-40 corner sensor/back sensor-ECU connector terminal No. 8, 12.
- Wiring harness from F-33 Back sensor (LH) connector terminal No. 1, 2 to C-40 corner sensor/back sensor-ECU connector terminal No. 7, 21.

NOTE: Prior to the wiring harness inspection, check intermediate connectors C-27, D-17, F-18, and repair if necessary.

Q: Are all the wiring harness wires in good condition?
YES : Go to Step 3.
NO : Repair the wiring harness.

STEP 3. Confirm which reversing sensor (corner sensor/back sensor) does not detect the obstacle.

Q: Which reversing sensor (corner sensor/back sensor) does not detect the obstacle?
Rear corner sensor (RH) : Go to Step 4.
Rear corner sensor (LH) : Go to Step 5.
Back sensor (RH) : Go to Step 6.
Back sensor (LH) : Go to Step 7.

STEP 4. Diagnosis code recheck

Temporarily replace the rear corner sensor (RH), and then check if the diagnosis code No. B252E is set.

Q: Is the diagnosis code set?

www.cargeek.ir

www.CarGeek.ir

YES : Replace the corner sensor/back sensor-ECU.
NO : Replace the rear corner sensor (RH).

STEP 5. Diagnosis code recheck
Temporarily replace the rear corner sensor (LH), and then check if the diagnosis code No. B2530 is set.

Q: Is the diagnosis code set?
YES : Replace the corner sensor/back sensor-ECU.
NO : Replace the rear corner sensor (LH).

STEP 6. Diagnosis code recheck
Temporarily replace the back sensor (RH), and then check if the diagnosis code No. B2532 is set.

Q: Is the diagnosis code set?
YES : Replace the corner sensor/back sensor-ECU.
NO : Replace the back sensor (RH).

STEP 7. Diagnosis code recheck
Temporarily replace the back sensor (LH), and then check if the diagnosis code No. B2534 is set.

Q: Is the diagnosis code set?
YES : Replace the corner sensor/back sensor-ECU.
NO : Replace the back sensor (LH).

www.cargeek.ir

www.cargeek.ir

www.CarGeek.ir

Code No. B252F Rear corner sensor (RH) error
Code No. B2531 Rear corner sensor (LH) error
Code No. B2533 Back sensor (RH) error
Code No. B2535 Back sensor (LH) error

⚠ CAUTION
Before replacing the ECU or sensor, ensure that the power supply circuit, the earth circuit and the communication circuit are normal.

Corner Sensor/Back Sensor Circuit

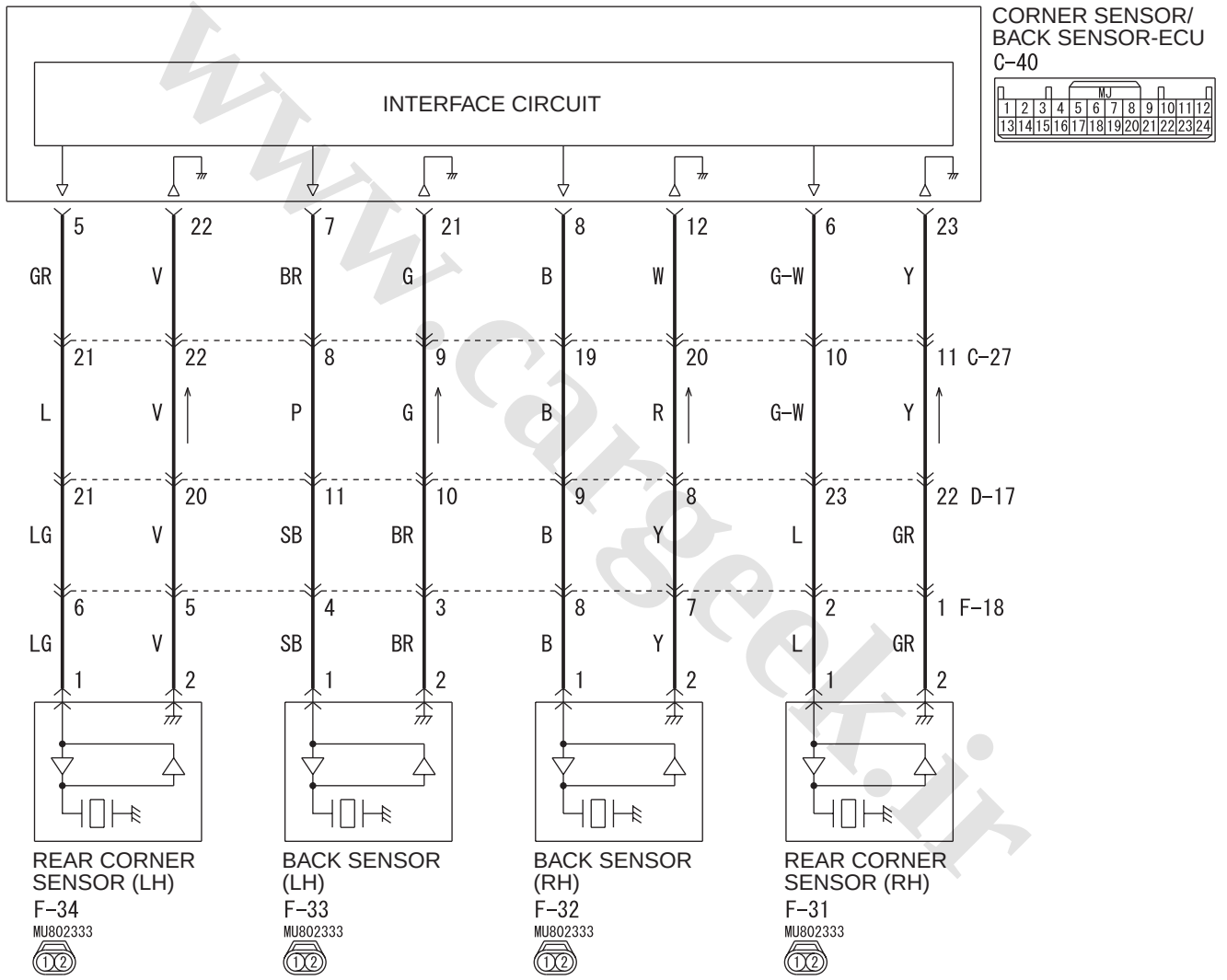

Wire colour code
B : Black LG : Light green G : Green L : Blue W : White Y : Yellow SB : Sky blue
BR : Brown O : Orange GR : Grey R : Red P : Pink V : Violet PU : Purple SI : Silver

WDH54E005A

www.cargeek.ir

www.CarGeek.ir

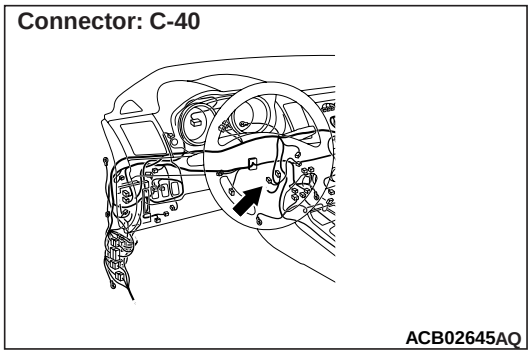

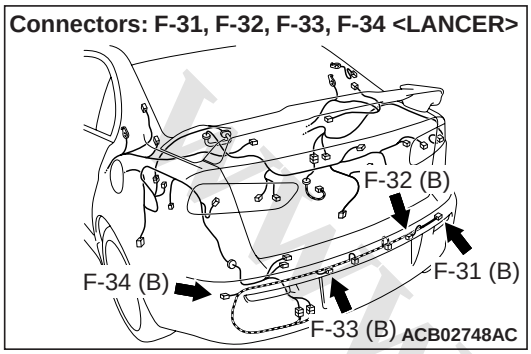

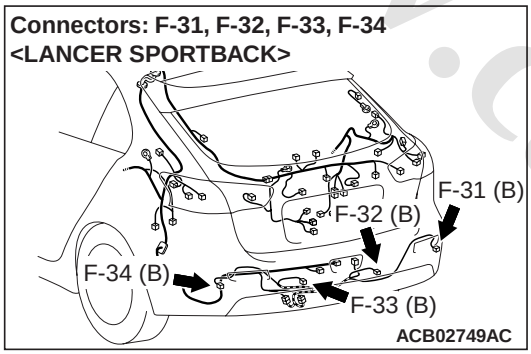

DIAGNOSTIC FUNCTION

- If any of the sensors has a malfunction, if there is a short circuit between the sensor and corner sensor/back sensor-ECU, or if there is an error with the corner sensor/back sensor-ECU internal monitor, the corner sensor/back sensor-ECU sets one of the diagnosis codes No. B252F, No. B2531, No. B2533, and No. 2535.

TROUBLESHOOTING HINT

- Damaged harness wires and connectors
- Sensor malfunction
- Internal monitor error of corner sensor/back sensor-ECU

DIAGNOSIS PROCEDURE

STEP 1. Check the following connectors.

Check the following connectors:

- F-31 Rear corner sensor (RH) connector
- F-34 Rear corner sensor (LH) connector
- F-32 Back sensor (RH) connector
- F-33 Back sensor (LH) connector
- C-40 corner sensor/back sensor-ECU connector

Q: Are all the connectors in good condition?
YES : Go to Step 2.
NO : Repair the defective connector.

STEP 2. Check the following wiring harness.

Check the wiring harness for short circuit between the following connectors:

- Wiring harness from F-31 Rear corner sensor (RH) connector terminal No. 1, 2 to C-40 corner sensor/back sensor-ECU connector terminal No. 6, 23.
- Wiring harness from F-34 Rear corner sensor (LH) connector terminal No. 1, 2 to C-40 corner sensor/back sensor-ECU connector terminal No. 5, 22.
- Wiring harness from F-32 Back sensor (RH) connector terminal No. 1, 2 to C-40 corner sensor/back sensor-ECU connector terminal No. 8, 12.
- Wiring harness from F-33 Back sensor (LH) connector terminal No. 1, 2 to C-40 corner sensor/back sensor-ECU connector terminal No. 7, 21.

NOTE: Prior to the wiring harness inspection, check intermediate connectors C-27, D-17, F-18, and repair if necessary.

Q: Are all the wiring harness wires in good condition?
YES : Go to Step 3.
NO : Repair the wiring harness.

STEP 3. Confirm which reversing sensor (corner sensor/back sensor) does not detect the obstacle.

Q: Which reversing sensor (corner sensor/back sensor) does not detect the obstacle?
Rear corner sensor (RH) : Go to Step 4.
Rear corner sensor (LH) : Go to Step 5.
Back sensor (RH) : Go to Step 6.
Back sensor (LH) : Go to Step 7.

STEP 4. Diagnosis code recheck

Temporarily replace the rear corner sensor (RH), and then check if the diagnosis code No. B252F is set.

Q: Is the diagnosis code set?

www.cargeek.ir

www.CarGeek.ir

YES : Replace the corner sensor/back sensor-ECU.
NO : Replace the rear corner sensor (RH).

STEP 5. Diagnosis code recheck
Temporarily replace the rear corner sensor (LH), and then check if the diagnosis code No. B2531 is set.

Q: Is the diagnosis code set?
YES : Replace the corner sensor/back sensor-ECU.
NO : Replace the rear corner sensor (LH).

STEP 6. Diagnosis code recheck
Temporarily replace the back sensor (RH), and then check if the diagnosis code No. B2533 is set.

Q: Is the diagnosis code set?
YES : Replace the corner sensor/back sensor-ECU.
NO : Replace the back sensor (RH).

STEP 7. Diagnosis code recheck
Temporarily replace the back sensor (LH), and then check if the diagnosis code No. B2535 is set.

Q: Is the diagnosis code set?
YES : Replace the corner sensor/back sensor-ECU.
NO : Replace the back sensor (LH).

Code No.U0001 Bus off (CAN-C)

⚠ CAUTION
- **If there is any problem in the CAN bus lines, an incorrect diagnosis code may be set. Prior to this diagnosis, always diagnose the CAN bus lines.**
- **Before replacing the ECU, ensure that the power supply circuit, the earth circuit and the communication circuit are normal.**

DIAGNOSTIC FUNCTION
This diagnosis code is set when corner sensor/back sensor-ECU has ceased the CAN communication (bus off).

JUDGEMENT CRITERIA
The corner sensor/back sensor-ECU judges the bus-off error.

PROBABLE CAUSES
- Malfunction of the corner sensor/back sensor-ECU
- Malfunction of wiring harness or connector

DIAGNOSIS PROCEDURE

STEP 1. M.U.T.-III CAN bus diagnostics
Use the M.U.T.-III to diagnose the CAN bus lines.

Q: Is the check result normal?
YES : Go to Step 2.
NO : Repair the CAN bus line (Refer to GROUP 54C – Troubleshooting).

STEP 2. Check whether the diagnosis code is reset.
Check again if the diagnosis code is set to the corner sensor/back sensor-ECU.
(1) Erase the diagnosis code.
(2) Turn the ignition switch from "LOCK" (OFF) position to "ON" position.
(3) Check if diagnosis code is set.

Q: Is the diagnosis code set?
YES : Replace corner sensor/back sensor-ECU.
NO : The trouble can be an intermittent malfunction (Refer to GROUP 00 – How to use Troubleshooting/inspection Service Points – How to Cope with Intermittent Malfunction).

www.cargeek.ir

www.CarGeek.ir

Code No. U0100 Engine-ECU CAN timeout

⚠ CAUTION
- **If the diagnosis code No. U0100 is set, be sure to diagnose the CAN bus line.**
- **Before replacing the ECU, ensure that the power supply circuit, the earth circuit and the communication circuit are normal.**

DIAGNOSTIC FUNCTION
The corner sensor/back sensor-ECU sets diagnosis code No.U0100 when it cannot receive signals from the engine ECU.

JUDGEMENT CRITERIA
The corner sensor/back sensor-ECU cannot receive the signal from the engine-ECU via the CAN bus line.

PROBABLE CAUSES
- Malfunction of CAN bus line
- Malfunction of engine-ECU
- Malfunction of corner sensor/back sensor-ECU

DIAGNOSIS PROCEDURE

STEP 1. M.U.T.-III CAN bus diagnostics
Use the M.U.T.-III to diagnose the CAN bus lines.

Q: Is the check result normal?
YES : Go to Step 2.
NO : Repair the CAN bus line (Refer to GROUP 54C – Troubleshooting).

STEP 2. M.U.T.-III other system diagnosis code
Check if diagnosis code is set to the engine-ECU.

Q: Is the diagnosis code set?
YES : Troubleshoot the engine (Refer to GROUP 13A – Diagnosis Code Chart <1600>, GROUP 13B – Diagnosis Code Chart <1800-PETROL-DOHC, 2000>, GROUP 13C – Diagnosis Code Chart <DIESEL> or GROUP 13F – Diagnosis Code Chart <1800-SOHC>).
NO : Go to Step 3.

STEP 3. Check the M.U.T.-III Diagnosis code for other systems
Check if the diagnosis code No. U0100 is set to ETACS-ECU.

Q: Is the diagnosis code set?
YES : Go to Step 4.
NO : Go to Step 5.

STEP 4. Diagnosis code recheck
Check again if the diagnosis code is set to the corner sensor/back sensor-ECU.
(1) Erase the diagnosis code.
(2) Turn the ignition switch from the LOCK (OFF) position to the ON position.
(3) Check if the diagnosis code is set.

Q: Is the diagnosis code set?
YES : Replace the engine-ECU.
NO : A poor connection, open circuit, or other intermittent malfunction in the CAN bus line between the corner sensor/back sensor-ECU and the engine-ECU. (Refer to GROUP 00 – How to Use Troubleshooting/ Inspection Service Points - How to Cope with Intermittent Malfunction .)

STEP 5. Diagnosis code recheck
Check again if the diagnosis code is set to the head-lamp automatic levelling-ECU.
(1) Erase the diagnosis code.
(2) Turn the ignition switch from the LOCK (OFF) position to the ON position.
(3) Check if the diagnosis code is set.

Q: Is the diagnosis code set?
YES : Replace the corner sensor/back sensor-ECU.
NO : A poor connection, open circuit, or other intermittent malfunction in the CAN bus line between the corner sensor/back sensor-ECU and the engine-ECU. (Refer to GROUP 00 – How to Use Troubleshooting/ Inspection Service Points - How to Cope with Intermittent Malfunction .)

www.cargeek.ir

www.CarGeek.ir

Code No.U0121 ASC/ABS-ECU CAN timeout

⚠ CAUTION

- **If the diagnosis code No. U0121 is set, be sure to diagnose the CAN bus line.**
- **Before replacing the ECU, ensure that the power supply circuit, the earth circuit and the communication circuit are normal.**

DIAGNOSTIC FUNCTION

The corner sensor/back sensor-ECU sets diagnosis code No.U0121 when it cannot receive signals from the ABS-ECU or ASC-ECU.

JUDGEMENT CRITERIA

The corner sensor/back sensor-ECU cannot receive the signal from the ABS-ECU or ASC-ECU via the CAN bus line.

PROBABLE CAUSES

- Malfunction of CAN bus line
- Malfunction of ABS-ECU or ASC-ECU
- Malfunction of corner sensor/back sensor-ECU

DIAGNOSIS PROCEDURE

STEP 1. M.U.T.-III CAN bus diagnostics

Use the M.U.T.-III to diagnose the CAN bus lines.

Q: Is the check result normal?

YES : Go to Step 2.
NO : Repair the CAN bus line (Refer to GROUP 54C – Troubleshooting).

STEP 2. M.U.T.-III other system diagnosis code

Check if diagnosis code is set to the ABS-ECU or ASC-ECU.

Q: Is the diagnosis code set to the any of the above?

Set to the ABS-ECU. : Troubleshoot the ABS. Refer to GROUP 35B – Troubleshooting .
Set to the ASC-ECU. : Troubleshoot the ASC. Refer to GROUP 35C – Troubleshooting .
NO : Go to Step 3.

STEP 3. Check the M.U.T.-III Diagnosis code for other systems

Check if the diagnosis code No. U0121 is set to ETACS-ECU.

Q: Is the diagnosis code set?

YES : Go to Step 4.
NO : Go to Step 5.

STEP 4. Diagnosis code recheck

Check again if the diagnosis code is set to the corner sensor/back sensor-ECU.

(1) Erase the diagnosis code.
(2) Turn the ignition switch from the LOCK (OFF) position to the ON position.
(3) Check if the diagnosis code is set.

Q: Is the diagnosis code set?

YES : Replace the ABS-ECU or ASC-ECU.
NO : A poor connection, open circuit, or other intermittent malfunction in the CAN bus line between the corner sensor/back sensor-ECU and the ABS-ECU or ASC-ECU. (Refer to GROUP 00 – How to Use Troubleshooting/Inspection Service Points - How to Cope with Intermittent Malfunction .)

STEP 5. Diagnosis code recheck

Check again if the diagnosis code is set to the corner sensor/back sensor-ECU.

(1) Erase the diagnosis code.
(2) Turn the ignition switch from the LOCK (OFF) position to the ON position.
(3) Check if the diagnosis code is set.

Q: Is the diagnosis code set?

YES : Replace the corner sensor/back sensor-ECU.
NO : A poor connection, open circuit, or other intermittent malfunction in the CAN bus line between the corner sensor/back sensor-ECU and the ABS-ECU or ASC-ECU. (Refer to GROUP 00 – How to Use Troubleshooting/Inspection Service Points - How to Cope with Intermittent Malfunction .)

www.cargeek.ir

www.CarGeek.ir

Code No. U0141 ETACS-ECU CAN timeout

⚠ CAUTION
- **If the diagnosis code No. U0141 is set, be sure to diagnose the CAN bus line.**
- **Before replacing the ECU, ensure that the power supply circuit, the earth circuit and the communication circuit are normal.**

DIAGNOSTIC FUNCTION
The corner sensor/back sensor-ECU sets diagnosis code No.U0141 when it cannot receive signals from the ETACS-ECU.

JUDGEMENT CRITERIA
The corner sensor/back sensor-ECU cannot receive the signal from the ETACS-ECU via the CAN bus line.

PROBABLE CAUSES
- Malfunction of CAN bus line
- Malfunction of ETACS-ECU
- Malfunction of corner sensor/back sensor-ECU

DIAGNOSIS PROCEDURE

STEP 1. M.U.T.-III CAN bus diagnostics
Use the M.U.T.-III to diagnose the CAN bus lines.

Q: Is the check result normal?
YES : Go to Step 2.
NO : Repair the CAN bus line (Refer to GROUP 54C – Troubleshooting).

STEP 2. M.U.T.-III other system diagnosis code
Check again if the diagnosis code is set to the ETACS-ECU.

Q: Is the diagnosis code set?
YES : Troubleshoot the ETACS-ECU. (Refer to GROUP 54A – ETACS-ECU – Troubleshooting .)
NO : Go to Step 3.

STEP 3. Check the M.U.T.-III Diagnosis code for other systems
Check if the diagnosis code No. U0141 is set to engine-ECU.

Q: Is the diagnosis code set?
YES : Go to Step 4.
NO : Go to Step 5.

STEP 4. Diagnosis code recheck
Check again if the diagnosis code is set to the corner sensor/back sensor-ECU.
(1) Erase the diagnosis code.
(2) Turn the ignition switch from the LOCK (OFF) position to the ON position.
(3) Check if the diagnosis code is set.

Q: Is the diagnosis code set?
YES : Replace the ETACS-ECU.
NO : A poor connection, open circuit, or other intermittent malfunction in the CAN bus line between the corner sensor/back sensor-ECU and the ETACS-ECU. (Refer to GROUP 00 – How to Use Troubleshooting/ Inspection Service Points - How to Cope with Intermittent Malfunction .)

STEP 5. Diagnosis code recheck
Check again if the diagnosis code is set to the corner sensor/back sensor-ECU.
(1) Erase the diagnosis code.
(2) Turn the ignition switch from the LOCK (OFF) position to the ON position.
(3) Check if the diagnosis code is set.

Q: Is the diagnosis code set?
YES : Replace the headlamp automatic levelling-ECU.
NO : A poor connection, open circuit, or other intermittent malfunction in the CAN bus line between the corner sensor/back sensor-ECU and the ETACS-ECU. (Refer to GROUP 00 – How to Use Troubleshooting/ Inspection Service Points - How to Cope with Intermittent Malfunction .)

www.cargeek.ir

www.CarGeek.ir

TROUBLE SYMPTOM CHART

M1547001501133

Trouble symptom	Inspection procedure number	Reference page
The reversing sensor system does not operate.	1	
The reversing sensor indicator does not illuminate.	2	
The system cannot be activated or deactivated even when the sonar switch is pressed.	3	
One or more of the reversing sensor (corner sensor/back sensor) does not detect the obstacle.	4	
The reversing sensor indicator keeps flashing.	5	
Obstacle is not detected even when the selector or shift lever is shifted to "R" (Reverse) position.	6	

www.cargeek.ir

www.cargeek.ir

www.CarGeek.ir

SYMPTOM PROCEDURES

Inspection Procedure 1: The reversing sensor system does not operate.

⚠ CAUTION

- **Whenever the ECU is replaced, ensure that the input signal circuit is normal.**
- **When the illuminated licence plate is installed, the sensors may not operate because of noise from the plate. (When the ultrasonic noise is received, the bass toned buzzer sound continuously. When the ultrasonic noise stops, the normal operation will be resumed immediately.)**

Reversing Sensor System Power Source Circuit

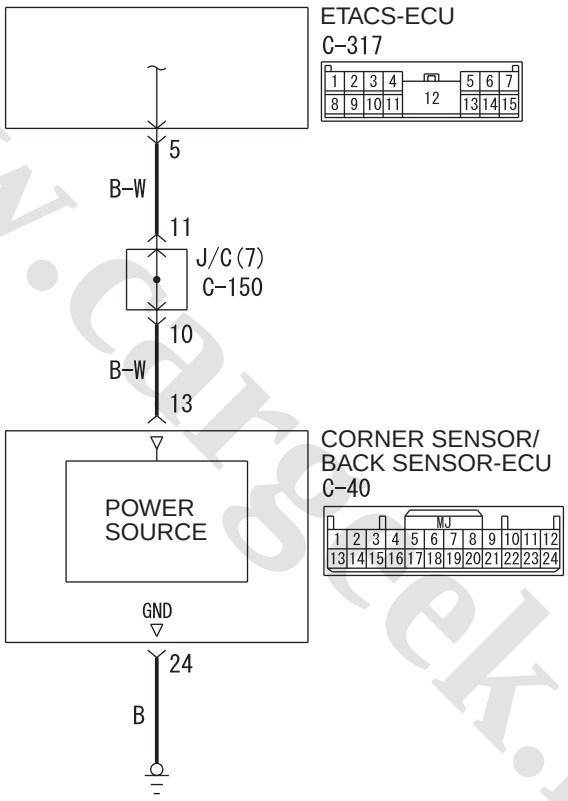

Wire colour code
B : Black LG : Light green G : Green L : Blue W : White Y : Yellow SB : Sky blue
BR : Brown O : Orange GR : Grey R : Red P : Pink V : Violet PU : Purple SI : Silver

WBH54E004A

Connector: C-40

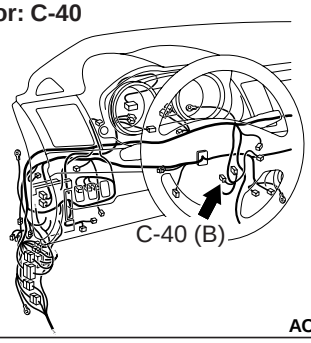

AC612705DQ

Connector: C-317
ETACS-ECU

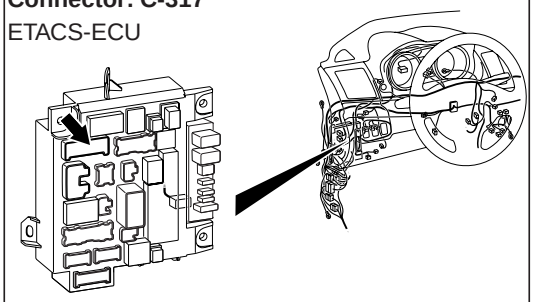

ACA00886AL

www.cargeek.ir

www.CarGeek.ir

COMMENTS ON TROUBLE SYMPTOM

If the Reversing sensor system does not work at all even when the ignition switch is turned "ON", the power supply system, corner sensor/back sensor-ECU or ETACS-ECU may have a problem.

PROBABLE CAUSES

- Malfunction of corner sensor/back sensor-ECU
- Malfunction of the ETACS-ECU
- Damaged harness wires and connectors

DIAGNOSIS PROCEDURE

STEP 1. Connector check: C-40 corner sensor/back sensor-ECU connector

Q: Is the check result normal?
YES : Go to Step 2.
NO : Repair the defective connector.

STEP 2. Voltage measurement at the C-40 corner sensor/back sensor-ECU connector

(1) Disconnect the connector, and measure at the wiring harness side.
(2) Turn the ignition switch to the "ON" position.
(3) Measure the voltage between the C-40 corner sensor/back sensor-ECU connector (terminal No. 13) and the body earth.

OK: System voltage

Q: Is the check result normal?
YES : Go to Step 5.
NO : Go to Step 3.

STEP 3. Connector check: C-317 ETACS-ECU connector

Q: Is the check result normal?
YES : Go to Step 4.
NO : Repair the defective connector.

STEP 4. Wiring harness check between the C-317 ETACS-ECU connector (terminal No. 5) and the C-40 corner sensor/back sensor-ECU connector (terminal No. 13)

- Check the power supply line for open circuit or short circuit.

NOTE: Before the wiring harness inspection, inspect joint connector C-150, and repair if necessary.

Q: Is the check result normal?
YES : Troubleshoot the ETACS-ECU. Refer to Inspection Procedure 2 "The ignition switch (IG1) signal is not received" .
NO : Repair the wiring harness.

STEP 5. Resistance measurement at the C-40 corner sensor/back sensor-ECU connector

(1) Disconnect the connector, and measure at the wiring harness side.
(2) Measure the resistance between the C-40 corner sensor/back sensor-ECU connector (terminal No. 24) and the body earth.

OK: Continuity exists (2 Ω or less)

Q: Is the check result normal?
YES : Go to Step 7.
NO : Go to Step 6.

STEP 6. Wiring harness check between the C-40 corner sensor/back sensor-ECU connector (terminal No. 24) and the body earth

- Check the earth wires for open circuit.

Q: Is the check result normal?
YES : Retest the system.
NO : Repair the wiring harness.

STEP 7. Replace the corner sensor/back sensor-ECU temporarily, and then check the trouble symptom.

Replace the corner sensor/back sensor-ECU temporarily, then check if the corner sensors operate.

Q: Is the check result normal?
YES : Replace the corner sensor/back sensor-ECU.
NO : Replace the ETACS-ECU.

www.cargeek.ir

www.CarGeek.ir

Inspection Procedure 2: The reversing sensor indicator does not illuminate.

⚠ CAUTION

- **Whenever the ECU is replaced, ensure that the input signal circuit is normal.**
- **When the illuminated licence plate is installed, the sensors may not operate because of noise from the plate. (When the ultrasonic noise is received, the bass toned buzzer sound continuously. When the ultrasonic noise stops, the normal operation will be resumed immediately.)**

Sonar Switch Indicator Circuit

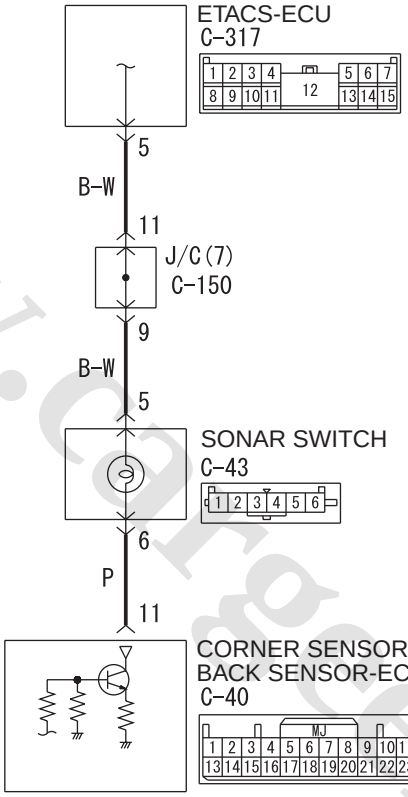

Wire colour code
B : Black LG : Light green G : Green L : Blue W : White Y : Yellow SB : Sky blue
BR : Brown O : Orange GR : Grey R : Red P : Pink V : Violet PU : Purple SI : Silver

WBH54E005A

Connector: C-40

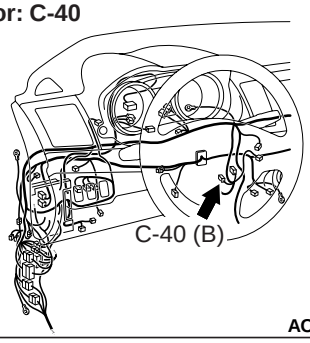

AC612705DQ

Connector: C-43

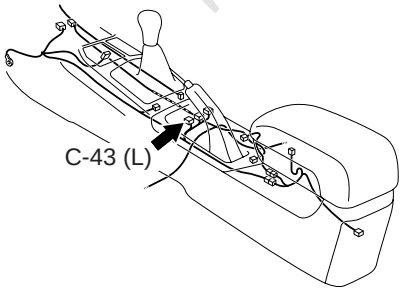

AC801266AJ

www.cargeek.ir

www.CarGeek.ir

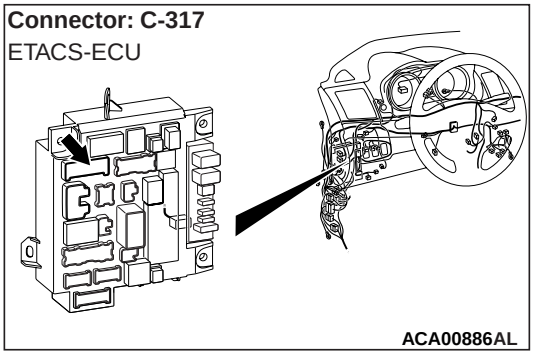

COMMENTS ON TROUBLE SYMPTOM

If the reversing indicator does not illuminate, the wiring harness, connectors, corner sensor/back sensor-ECU, or ETACS-ECU may be defective.

PROBABLE CAUSES

- Damaged harness wires and connectors
- Malfunction of corner sensor/back sensor-ECU
- Malfunction of the ETACS-ECU

DIAGNOSIS PROCEDURE

STEP 1. Connector check: C-43 sonar switch connector

Q: Is the check result normal?
YES : Go to Step 2.
NO : Repair the defective connector.

STEP 2. Sonar switch check

Check the indicator. (Refer to)

Q: Is the check result normal?
YES : Go to Step 3.
NO : Replace the sonar switch.

STEP 3. M.U.T.-III other system diagnosis code

Check if the diagnosis code is set to the ETACS-ECU.

Q: Is the check result normal?
YES : Troubleshoot the ETACS-ECU. Refer to ETACS-ECU – Troubleshooting .
NO : Go to Step 4.

STEP 4. Voltage measurement at the C-43 sonar switch connector

(1) Disconnect the connector, and measure at the wiring harness side.
(2) Turn the ignition switch to the "ON" position.
(3) Measure the voltage between the C-43 sonar switch connector (terminal No. 5) and the body earth.

OK: System voltage

Q: Is the check result normal?
YES : Go to Step 6.
NO : Go to Step 5.

STEP 5. Wiring harness check from C-317 ETACS-ECU connector (terminal No.5) to C-43 sonar switch connector (terminal No. 5)

- Check the communication line for open circuit or short circuit.

NOTE: Before the wiring harness inspection, inspect joint connector C-150, and repair if necessary.

Q: Is the check result normal?
YES : Troubleshoot the ETACS-ECU. Refer to Inspection Procedure 2 "The ignition switch (IG1) signal is not received" .
NO : Repair the wiring harness.

STEP 6. Connector check: C-40 corner sensor/back sensor-ECU connector

Q: Is the check result normal?
YES : Go to Step 7.
NO : Repair the defective connector.

STEP 7. Wiring harness check from C-43 sonar switch connector (terminal No. 6) to C-40 corner sensor/back sensor-ECU connector (terminal No. 11).

- Check the communication line for open circuit or short circuit.

Q: Is the check result normal?
YES : Go to Step 8.
NO : Repair the wiring harness.

STEP 8. Retest the system

Q: Is the check result normal?
YES : The diagnosis is complete.
NO : Replace the corner sensor/back sensor-ECU.

www.cargeek.ir

www.CarGeek.ir

Inspection Procedure 3: The system cannot be activated or deactivated even when the sonar switch is pressed.

⚠ CAUTION

- **Whenever the ECU is replaced, ensure that the input signal circuit is normal.**
- **When the illuminated licence plate is installed, the sensors may not operate because of noise from the plate. (When the ultrasonic noise is received, the bass toned buzzer sound continuously. When the ultrasonic noise stops, the normal operation will be resumed immediately.)**

Sonar Switch Circuit

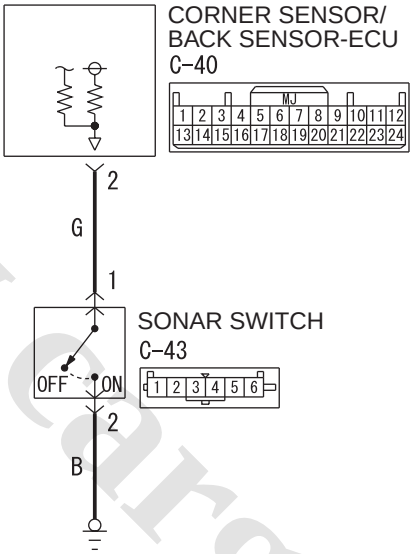

Wire colour code
B : Black LG : Light green G : Green L : Blue W : White Y : Yellow SB : Sky blue
BR : Brown O : Orange GR : Grey R : Red P : Pink V : Violet PU : Purple SI : Silver WDH54E006A

Connector: C-40

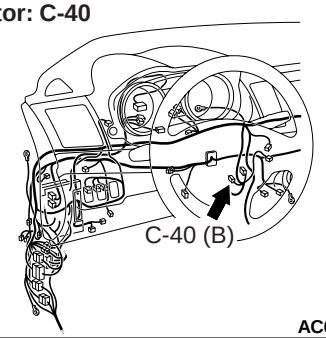

AC612705DQ

Connector: C-43

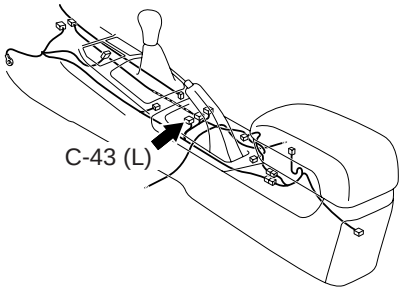

AC801266AJ

COMMENTS ON TROUBLE SYMPTOM

If the reversing sensor system ON/OFF cannot be switched even when the sonar switch is pressed, the harness, connector(s), sonar switch, or corner sensor/back sensor-ECU may have a problem.

PROBABLE CAUSES

- Damaged harness wires and connectors
- Malfunction of sonar switch
- Malfunction of corner sensor/back sensor-ECU

DIAGNOSIS PROCEDURE

STEP 1. Connector check: C-43 sonar switch connector

Q: Is the check result normal?

YES : Go to Step 2.
NO : Repair the defective connector.

www.cargeek.ir

www.CarGeek.ir

STEP 2. sonar switch check

Inspect the corner sensor switch for normal operation. (Refer to)

Q: Is the check result normal?
YES : Go to Step 3.
NO : Replace the sonar switch.

STEP 3. Resistance measurement at the C-43 sonar switch connector

(1) Disconnect the connector, and measure at the wiring harness side.
(2) Measure the resistance between the C-43 sonar switch connector (terminal No. 2) and the body earth.

OK: Continuity exists (2 Ω or less)

Q: Is the check result normal?
YES : Go to Step 5.
NO : Go to Step 4.

STEP 4. Wiring harness check between the C-43 sonar switch connector (terminal No. 2) and the body earth

- Check the earth wires for open circuit.

Q: Is the check result normal?
YES : Retest the system.
NO : Repair the wiring harness.

STEP 5. Connector check: C-40 corner sensor/ back sensor-ECU connector

Q: Is the check result normal?
YES : Go to Step 6.
NO : Repair the defective connector.

STEP 6. Wiring harness check between the C-43 sonar switch connector (terminal No. 1) and the C-40 corner sensor/back sensor-ECU connector (terminal No. 2)

- Check the communication line for open circuit or short circuit.

Q: Is the check result normal?
YES : Replace the corner sensor/back sensor-ECU.
NO : Repair the wiring harness.

Inspection Procedure 4: One or more of the reversing sensor (corner sensor/back sensor) does not detect the obstacle.
Inspection Procedure 5: The reversing sensor indicator keeps flashing.

⚠ CAUTION

- **Whenever the ECU is replaced, ensure that the input signal circuit is normal.**
- **When the illuminated licence plate is installed, the sensors may not operate because of noise from the plate. (When the ultrasonic noise is received, the bass toned buzzer sound continuously. When the ultrasonic noise stops, the normal operation will be resumed immediately.)**

COMMENTS ON TROUBLE SYMPTOM

If one or more of the reversing sensors (corner sensor/back sensor) cannot detect obstacles, the wires and connectors, reversing sensors (corner sensor/ back sensor), or the corner sensor/back sensor-ECU may have abnormalities. Also, if one or more of the sensors has an abnormality (open circuit, malfunction, etc.), the corner sensor/back sensor-ECU informs the abnormality by making the reversing sensor indicator flash.

NOTE:

- *If the corner sensor/back sensor-ECU detects an abnormality (open circuit, malfunction, etc.) with one or more of the sensors, it turns off the relevant sensor and sounds the high toned buzzer for 5 seconds. The reversing sensor indicator illuminates while the system is being operated until the relevant sensor returns to normal.*
- *If ultrasonic noise is received with one or more of the sensor, the corner sensor/back sensor-ECU sounds the low toned buzzer continuously. When the ultrasonic noise is stopped, the sensor returns to normal. (The reversing sensor indicator does not flash.)*

PROBABLE CAUSES

- Damaged harness wires and connectors
- Malfunction of reversing sensor (corner sensor/ back sensor)
- Malfunction of corner sensor/back sensor-ECU

www.cargeek.ir

www.CarGeek.ir

DIAGNOSIS PROCEDURE

STEP 1. Check the reversing sensor (corner sensor/back sensor) for interference.

Q: Are there anything that interferes with the communication (things that generate radio waves such as magnets and an air-cleaning device that has a power plug) near the reversing sensor (corner sensor/back sensor)?

YES : Move away or remove things that interfere with the communication (things that generate radio waves such as magnets and a air-cleaning device that has a power plug) near the reversing sensor (corner sensor/back sensor).

NO : Go to Step 2

STEP 2. M.U.T.-III diagnosis code

Check if diagnosis code is set to the reversing sensor (corner sensor/back sensor).

Q: Is the diagnosis code set?

YES : Refer to .

NO : Go to Step 3.

STEP 3. Trouble symptom recheck

Q: Is the check result normal?

YES : The trouble can be an intermittent malfunction (Refer to GROUP 00 – How to use Troubleshooting/inspection Service Points – How to Cope with Intermittent Malfunction).

NO : Replace the corner sensor/back sensor-ECU.

Inspection Procedure 6: Obstacle is not detected even when the selector or shift lever is shifted to "R" (Reverse) position.

⚠ CAUTION

- **Whenever the ECU is replaced, ensure that the input signal circuit is normal.**
- **When the illuminated licence plate is installed, the sensors may not operate because of noise from the plate. (When the ultrasonic noise is received, the bass toned buzzer sound continuously. When the ultrasonic noise stops, the normal operation will be resumed immediately.)**

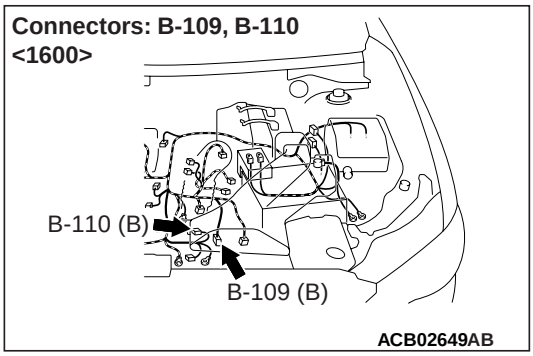

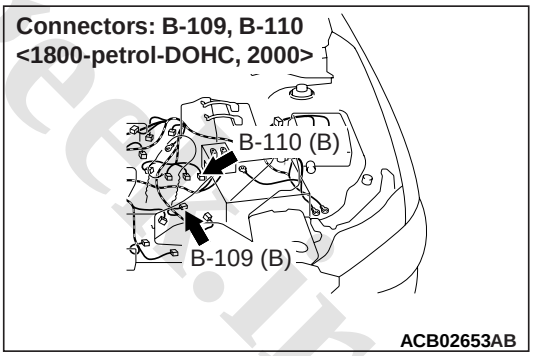

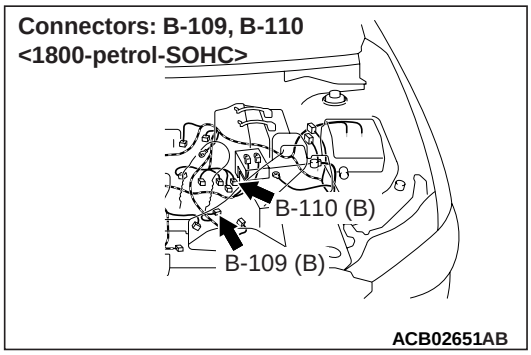

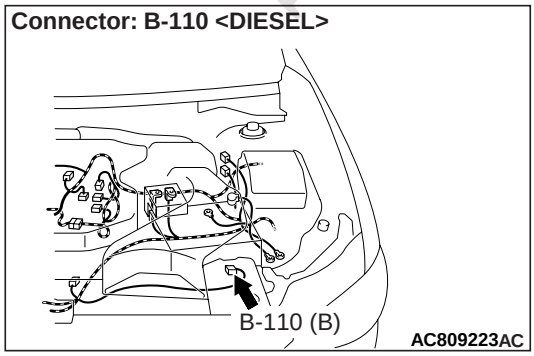

www.cargeek.ir

www.CarGeek.ir

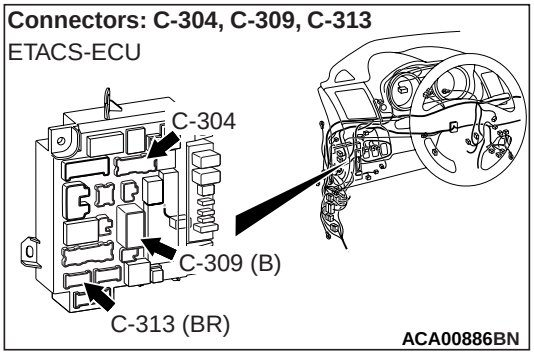

COMMENTS ON TROUBLE SYMPTOM

If obstacle is not detected even when the selector or shift lever is shifted to "R" (reverse) position, the wiring harness, connectors, inhibitor switch <CVT, A/T>, back-up lamp switch <M/T>, or corner sensor/back sensor-ECU may be defective. In addition, obstacle is not detected when the ultrasonic noise is received.

NOTE: If ultrasonic noise is received with the sensor, the corner sensor/bock sensor sounds the low toned buzzer continuously and turns off the system. When the ultrasonic noise is stopped, the sensor returns to normal.

PROBABLE CAUSES

- Damaged harness wires and connectors
- Malfunction of the inhibitor switch <CVT, A/T> or back-up lamp switch <M/T>
- Malfunction of corner sensor/back sensor-ECU

DIAGNOSIS PROCEDURE

STEP 1. M.U.T.-III CAN bus diagnostics

Use the M.U.T.-III to diagnose the CAN bus lines.

Q: Is the check result normal?

YES : Go to Step 2.

NO : Repair the CAN bus line (Refer to GROUP 54C – Troubleshooting).

STEP 2. M.U.T.-III other system diagnosis code

Check if the diagnosis code is set to the ETACS-ECU.

Q: Is the check result normal?

YES : Troubleshoot the ETACS-ECU. Refer to ETACS-ECU – Troubleshooting .

NO : Go to Step 3.

STEP 3. Check the reversing sensor (corner sensor/back sensor) for interference.

Q: Is there anything that interferes with the communication (things that generate radio waves such as magnets and an air-cleaning device that has a power plug) near the reversing sensor (corner sensor/back sensor)?

YES : Move away or remove things that interfere with the communication (things that generate radio waves such as magnets and a air-cleaning device that has a power plug) near the reversing sensor (corner sensor/back sensor).

NO : Go to Step 4.

STEP 4. Connector check: C-304 ETACS-ECU connector and B-109 inhibitor switch connector <CVT, A/T> or B-110 back-up lamp switch connector <M/T>.

Q: Is the check result normal?

YES : Go to Step 5

NO : Repair the defective connector.

STEP 5. Voltage measurement at C-304 ETACS-ECU connector.

(1) Disconnect C-304 ETACS-ECU connector, and measure at the wiring harness side.

(2) Turn the ignition switch to the "ON" position, and move the selector lever <CVT, A/T> or the shift lever <M/T> to the "R" position.

(3) Measure the voltage between terminal No. 2 and earth.

OK: System voltage

Q: Is the check result normal?

YES : Go to Step 11

NO : Go to Step 6

STEP 6. Check the wiring harness between B-109 inhibitor switch connector terminal (No. 7 <1600> or 9 <1800, 2000>) <CVT, A/T> or B-110 back-up lamp switch connector terminal No. 1 <M/T> and C-304 ETACS-ECU connector terminal No. 2.

- Check the communication line for open circuit or short circuit.

NOTE: Before the wiring harness inspection, inspect the intermediate connectors A-11 <PETROL> and A-60 <DIESEL>, and repair if necessary.

Q: Is the check result normal?

YES : Go to Step 7

NO : Repair the wiring harness.

STEP 7. Voltage measurement at B-109 inhibitor switch connector <CVT, A/T> or B-110 back-up lamp switch connector <M/T>.

(1) Disconnect B-109 inhibitor switch connector <CVT, A/T> or B-110 back-up lamp switch

www.cargeek.ir

connector <M/T>, and measure at the wiring harness side.
(2) Turn the ignition switch to "ON" position.
(3) Measure the voltage between or B-109 inhibitor switch connector <CVT, A/T> terminal (No. 8 <1600> or 3 (1800, 200)> or B-110 back-up lamp switch connector <M/T> terminal No. 2 and earth.

OK: System voltage

Q: Is the check result normal?
YES : Go to Step 10
NO : Go to Step 8

STEP 8. M.U.T.-III other system service data
Check the input signal from the ignition switch (IG1) in the ETACS-ECU.
- Turn the ignition switch to the ON position.

Item No.	Item name	Normal condition
Item 254	IG voltage	System voltage

OK: Normal condition is displayed.

Q: Is the check result normal?
YES : Go to Step 9.
NO : Troubleshoot the ETACS-ECU. Refer to Inspection Procedure 2 "The ignition switch (IG1) signal is not received." .

STEP 9. Check the wiring harness between B-109 inhibitor switch connector terminal (No. 8 <1600> or 3 <1800, 2000>) <CVT, A/T> or B-110 back-up lamp switch connector <M/T> terminal No. 2 and fusible link 34 <PETROL> or 44 <DIESEL>.
- Check the communication line for open circuit or short circuit.

NOTE: Before the wiring harness inspection, inspect the intermediate connectors A-11 <PETROL> or A-60 <DIESEL> and C-31, and ETACS-ECU connectors C-313 and C-309, and repair if necessary.

Q: Is the check result normal?
YES : The trouble can be an intermittent malfunction (Refer to GROUP 00 – How to use Troubleshooting/inspection Service Points – How to Cope with Intermittent Malfunction).
NO : Repair the wiring harness.

STEP 10. Check the inhibitor switch <CVT, A/T> or back-up lamp switch <M/T>.
Check the continuity of the inhibitor switch <A/T, CVT> or the back-up lamp switch <M/T>.(GROUP 23C – On-vehicle Service, Inhibitor Switch Continuity Check <A/T>, GROUP 23A – On-vehicle Service, Inhibitor Switch Continuity Check <CVT>, GROUP 22C – Transmission, Transmission Inspection <M/T>)

Q: Is the check result normal?
YES : The trouble can be an intermittent malfunction (Refer to GROUP 00 – How to use Troubleshooting/inspection Service Points – How to Cope with Intermittent Malfunction).
NO : Replace the inhibitor switch <CVT, A/T> or back-up lamp switch <M/T>.

STEP 11. Retest the system
Check if an obstacle is detected when the selector or shift lever is shifted to the "R" (Reverse) position.

Q: Is the check result normal?
YES : The trouble can be an intermittent malfunction (Refer to GROUP 00 – How to use Troubleshooting/inspection Service Points – How to Cope with Intermittent Malfunction).
NO : Replace the corner sensor/back sensor-ECU.

CHECK AT ECU TERMINALS

M1540701400443

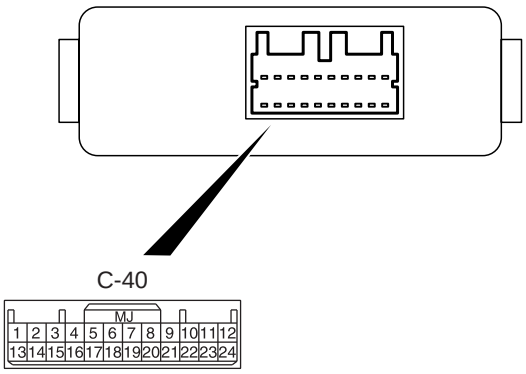

AC900564AE

www.cargeek.ir

www.CarGeek.ir

Terminal No.	Check item	Check conditions	Normal conditions
2	Sonar switch (System ON/OFF switch)	• Ignition switch: "ON" position • Sonar switch input: "OFF"	System voltage
		• Ignition switch: "ON" position • Sonar switch input: "ON"	1 V or less
5	Corner sensor (rear: LH)	• Ignition switch to "ON" position • Sonar switch: ON	0V – Approximately 8V (40 kHz pulse signal, emitted approx. every 125 ms)
6	Corner sensor (rear: RH)	• Ignition switch to "ON" position • Sonar switch: ON	0V – Approximately 8V (40 kHz pulse signal, emitted approx. every 125ms)
7	Back sensor (LH)	• Ignition switch to "ON" position • Sonar switch: ON	0V – Approximately 8V (40kHz pulse signal, emitted approx. every 125 ms)
8	Back sensor (RH)	• Ignition switch to "ON" position • Sonar switch: ON	0V – Approximately 8V (40 kHz pulse signal, emitted approx. every 125 ms)
11	Corner sensor OFF indicator lamp output (System ON/OFF indicator)	• Ignition switch: "ON" position • Sonar switch input: "OFF"	System voltage
		• Ignition switch: "ON" position • Sonar switch input: "ON"	1 V or less
12	Sensor earth 1	Always	1 V or less
13	Power supply to the ignition switch (IG2)	Ignition switch: "ON" position	System voltage
19	CAN-H	–	–
20	CAN-L	–	–
21	Sensor earth 2	Always	1 V or less
22	Sensor earth 3	Always	1 V or less
23	Sensor earth 4	Always	1 V or less
24	Earth	Always	1 V or less

www.cargeek.ir

www.CarGeek.ir

REMOVAL AND INSTALLATION

M1540701600395

CORNER SENSOR

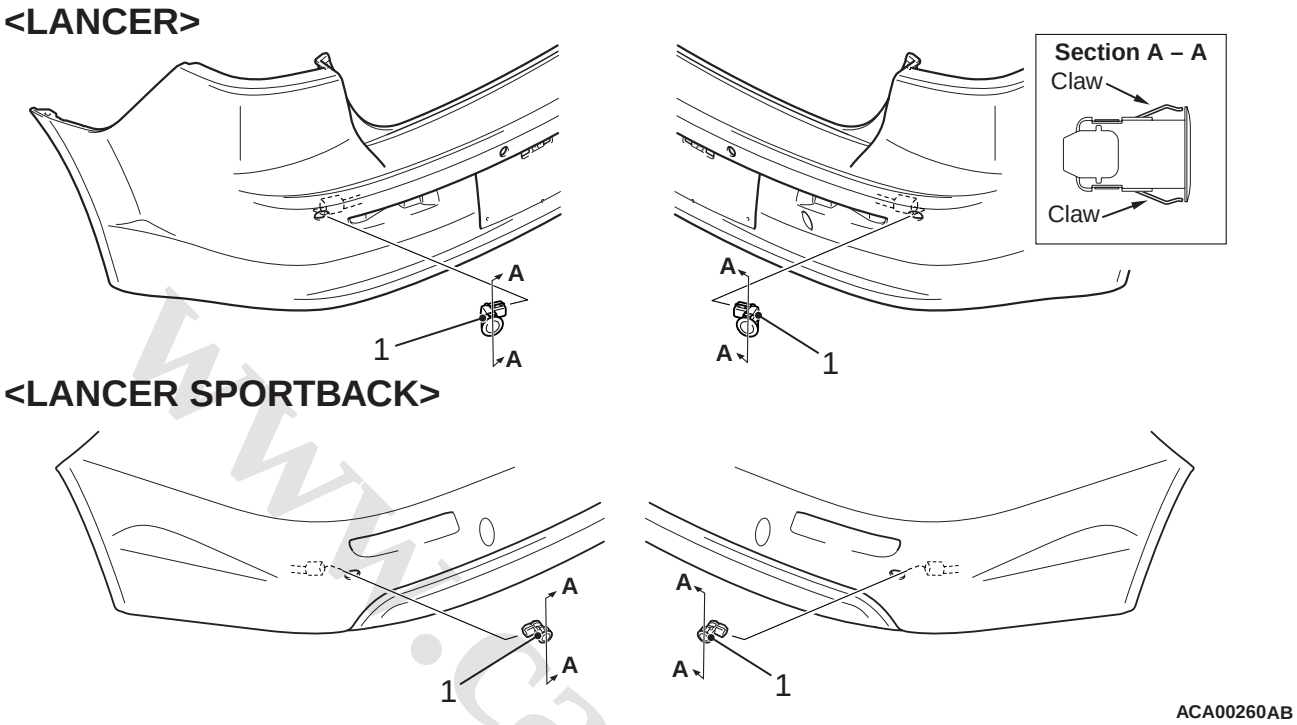

			Removal Step
<<A>>	>>A<<	1.	Corner sensor

www.cargeek.ir
www.cargeek.ir

www.CarGeek.ir

BACK SENSOR

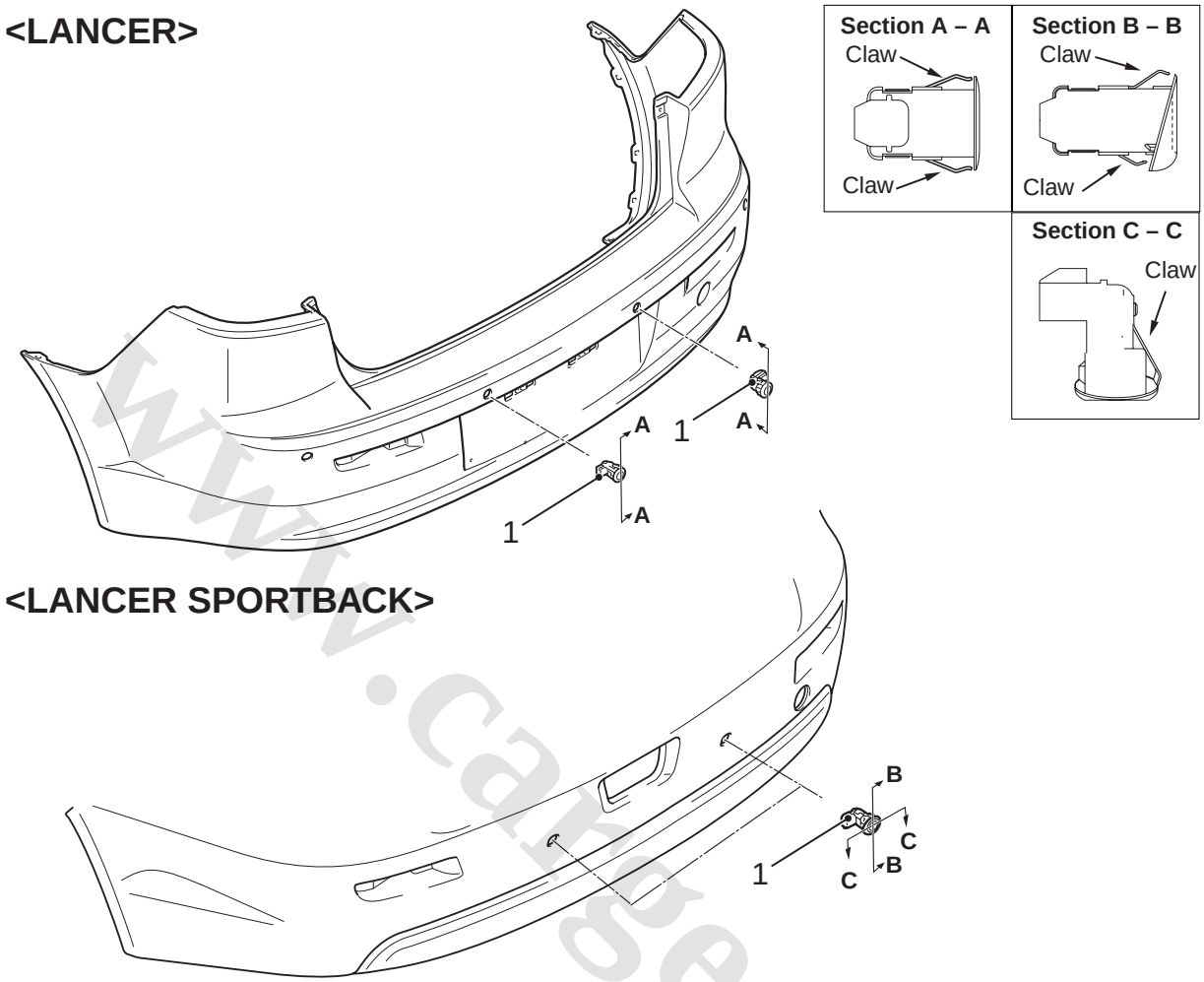

ACA00248AB

		Removal Step
<<A>>	>>B<<	1. Back sensor

REMOVAL SERVICE POINT

<<A>> CORNER SENSOR/BACK SENSOR REMOVAL

- First disconnect the connector joint, and then remove the sensor.

INSTALLATION SERVICE POINTS

>>A<< CORNER SENSOR <LANCER/LANCER SPORTBACK>/BACK SENSOR <LANCER> INSTALLATION

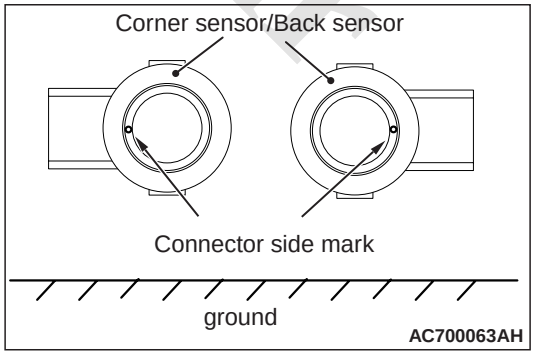

Install the sensor so that the sensor connector becomes horizontal to the earth (the connector side mark is in lateral direction).

www.cargeek.ir

www.CarGeek.ir

>>B<< BACK SENSOR <LANCER SPORTBACK>

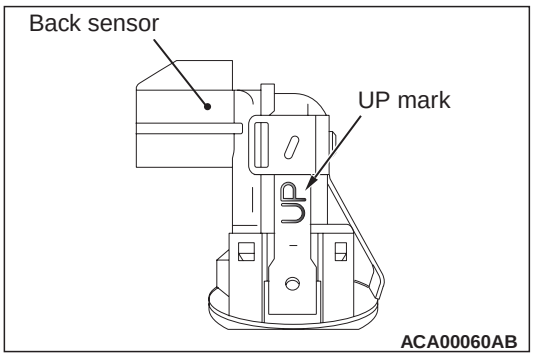

Install the back sensor so that the UP mark faces the top surface.

REMOVAL AND INSTALLATION

M1540701700068

Pre-removal operation	Post-installation operation
• Removal of floor console switch panel (Refer to GROUP 52A – Floor Console Assembly)	• Installation of floor console switch panel (Refer to GROUP 52A – Floor Console Assembly)

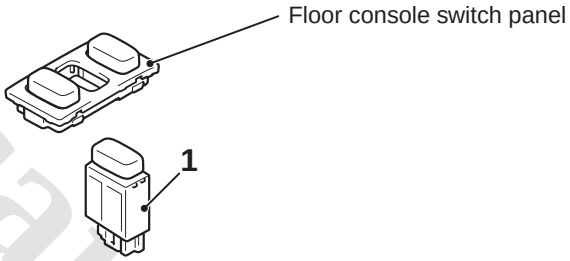

Removal Step

1. Sonar switch

REMOVAL AND INSTALLATION

M1540701500064

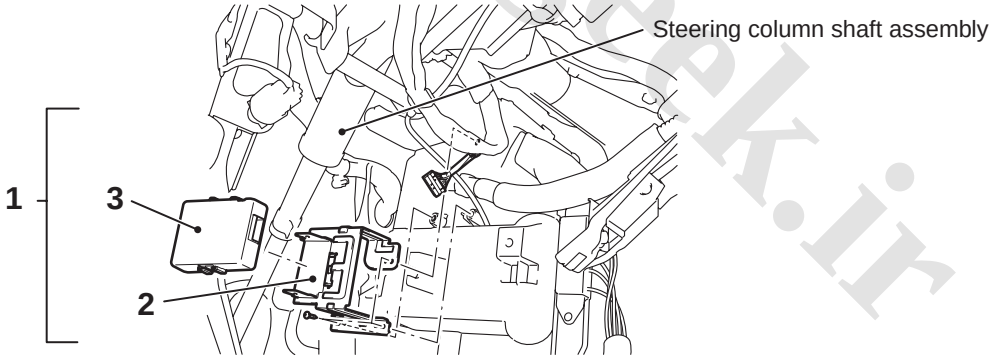

Removal Steps

1. Control unit bracket/Corner sensor/back sensor-ECU

Removal Steps (Continued)

2. Control unit bracket
3. Corner sensor/back sensor-ECU

www.cargeek.ir

www.CarGeek.ir

INSPECTION

SONAR SWITCH CHECK

M1540701800225

SWITCH ON/OFF CHECK

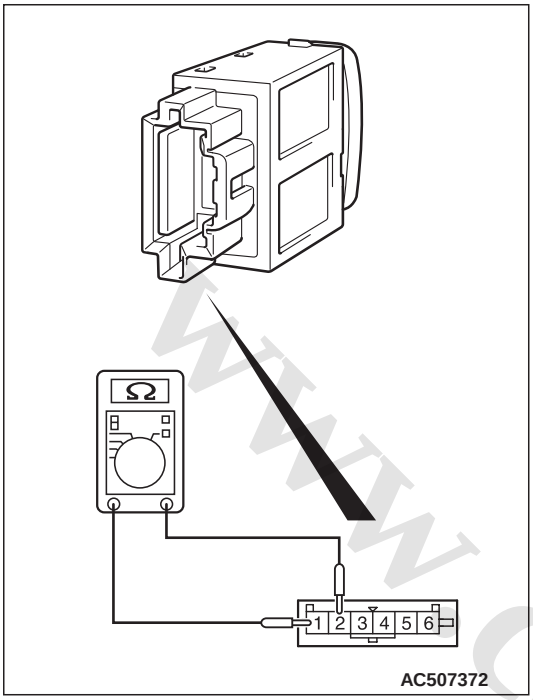

Switch position	Terminal number	Normal condition
ON (switch pushed)	1 – 2	Continuity exists (2 Ω or less)
OFF (switch released)		No continuity

REVERSING SENSOR INDICATOR CHECK

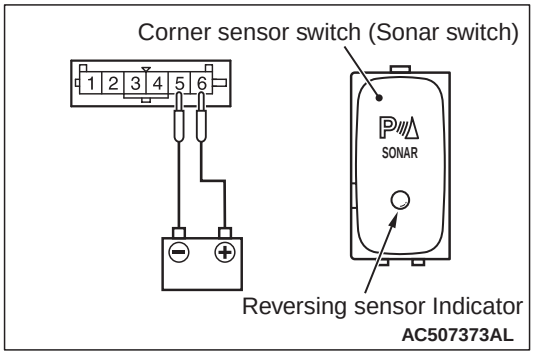

Apply the battery voltage of sonar switch connector terminal No. 5 and 6, and check if the reversing sensor indicator illuminates.

REAR VIEW CAMERA

GENERAL INFORMATION

M1540905600487

<VEHICLES WITH MMCS>

The rear view camera displays the rear view image of the vehicle on the multivision display for easy confirmation of safety when driving backward.

<VEHICLES WITHOUT MMCS>

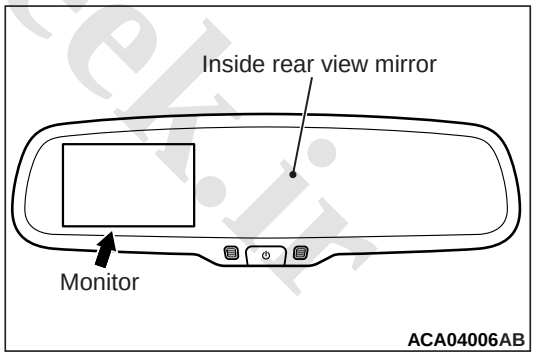

Since the monitor that displays the rear view camera image has been incorporated in the inside rear view mirror.

OPERATION

- When the shift lever <M/T> or selector lever <A/T, CVT> is moved to the R (Reverse) position with the ignition switch ON, the rear view monitor (integrated in inside-rear view mirror) displays the rear view via the rear-view camera automatically.

www.cargeek.ir

www.CarGeek.ir

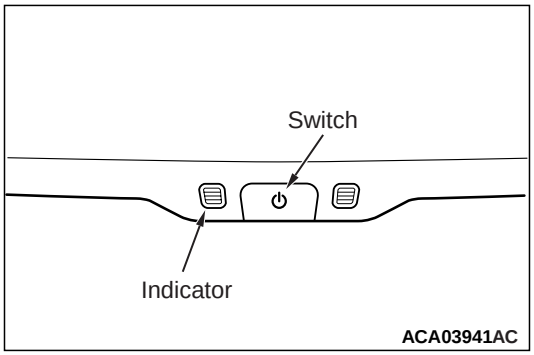

- The indicator illuminates green when the rear view monitor (integrated in inside-rear view mirror) displays the rear view.
- Functions can be changed over each time the switch is pressed.

SWITCH OPERATION AND SYSTEM OPERATION

Time for the switch to be pressed (second)	Operation
0 – 6	Monitor on and off. When the ignition switch is turned ON, the monitor will be switched on automatically. If the switch is pressed to switch the monitor off, the indicator illuminates orange.
6 – 12	Language selection for warning text on the monitor. Languages is changed over each time the switch is pressed. An applicable language will be memorized in five seconds after it is selected.
12 – 15	Setting the monitor to be always off. The indicator illuminates orange. When the ignition switch is turned ON at the next time, this monitor-OFF setting is memorized. If the switch is pressed, the monitor will be restored.

www.cargeek.ir
www.cargeek.ir

www.CarGeek.ir

SPECIAL TOOLS

M1540902100074

www.cargeek.ir

www.cargeek.ir

www.CarGeek.ir

Tool	Number	Name	Use
a 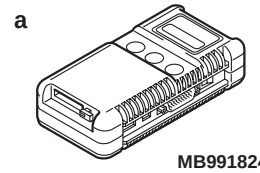 MB991824 b 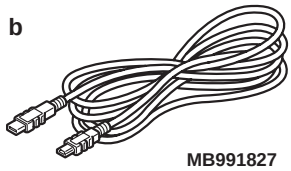 MB991827 c 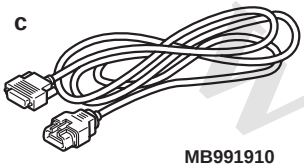 MB991910 d 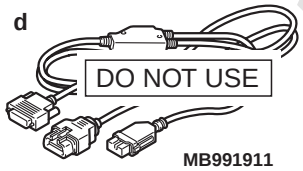 DO NOT USE MB991911 e 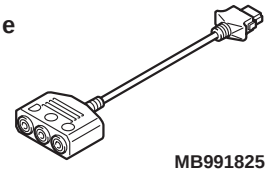 MB991825 f 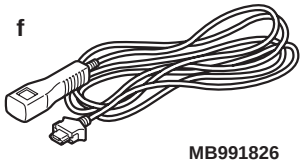 MB991826 MB991955	MB991955 a. MB991824 b. MB991827 c. MB991910 d. MB991911 e. MB991825 f. MB991826	M.U.T.-III sub-assembly a. Vehicle Communication Interface (V.C.I.) b. M.U.T.-III USB cable c. M.U.T.-III main harness A (Vehicles with CAN communication system) d. M.U.T.-III main harness B (Vehicles without CAN communication system) e. M.U.T.-III measure adapter f. M.U.T.-III trigger harness	⚠ CAUTION **For vehicles with CAN communication, use M.U.T.-III main harness A to send simulated vehicle speed. If you connect M.U.T.-III main harness B instead, the CAN communication does not function correctly.** CAN bus diagnostics or service data check.
a 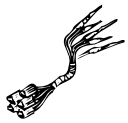 b 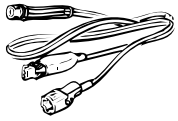 c 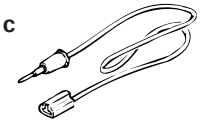 d DO NOT USE MB991223	MB991223 a. MB991219 b. MB991220 c. MB991221 d. MB991222	Harness set a. Check harness b. LED harness c. LED harness adapter d. Probe	Continuity check and voltage measurement at harness wire or connector a. For checking connector pin contact pressure b. For checking power supply circuit c. For checking power supply circuit d. For connecting a locally sourced tester

www.cargeek.ir

www.CarGeek.ir

Tool	Number	Name	Use
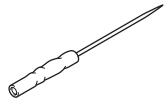 MB992006	MB992006	Extra fine probe	Continuity check and voltage measurement at harness wire or connector

TROUBLESHOOTING

STANDARD FLOW OF DIAGNOSTIC TROUBLESHOOTING

M1540902300067

Refer to GROUP 00 – Contents of troubleshooting .

TROUBLE SYMPTOM CHART

M1540900300458

Trouble symptom		Reference page
Rear view camera image is not correctly displayed.	<Vehicles with MMCS>	
	<Vehicles without MMCS>	

www.cargeek.ir

www.cargeek.ir

www.CarGeek.ir

SYMPTOM PROCEDURES

Rear view camera image is not correctly displayed. <Vehicles with MMCS>

⚠ CAUTION
Before replacing the multivision display, ensure that the power supply circuit, the earth circuit, and the communication circuit are normal. (Check that the voltage is 10 V or more.)

www.cargeek.ir

www.cargeek.ir

www.CarGeek.ir

Rear View Camera Circuit

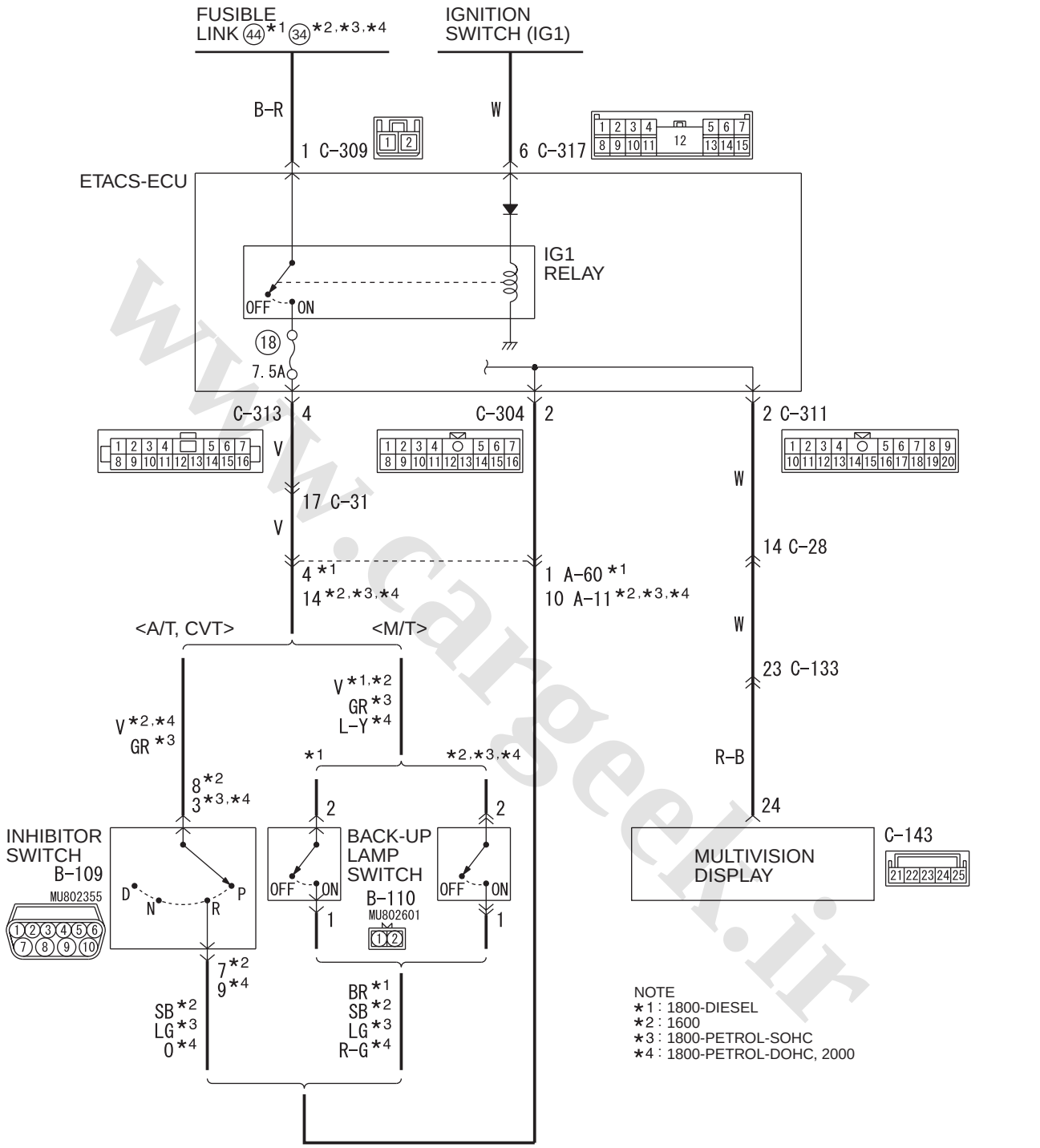

Wire colour code
B : Black LG : Light green G : Green L : Blue W : White Y : Yellow SB : Sky blue
BR : Brown O : Orange GR : Grey R : Red P : Pink V : Violet PU : Purple SI : Silver

WDH54E019A

www.cargeek.ir

www.CarGeek.ir

Rear View Camera Circuit

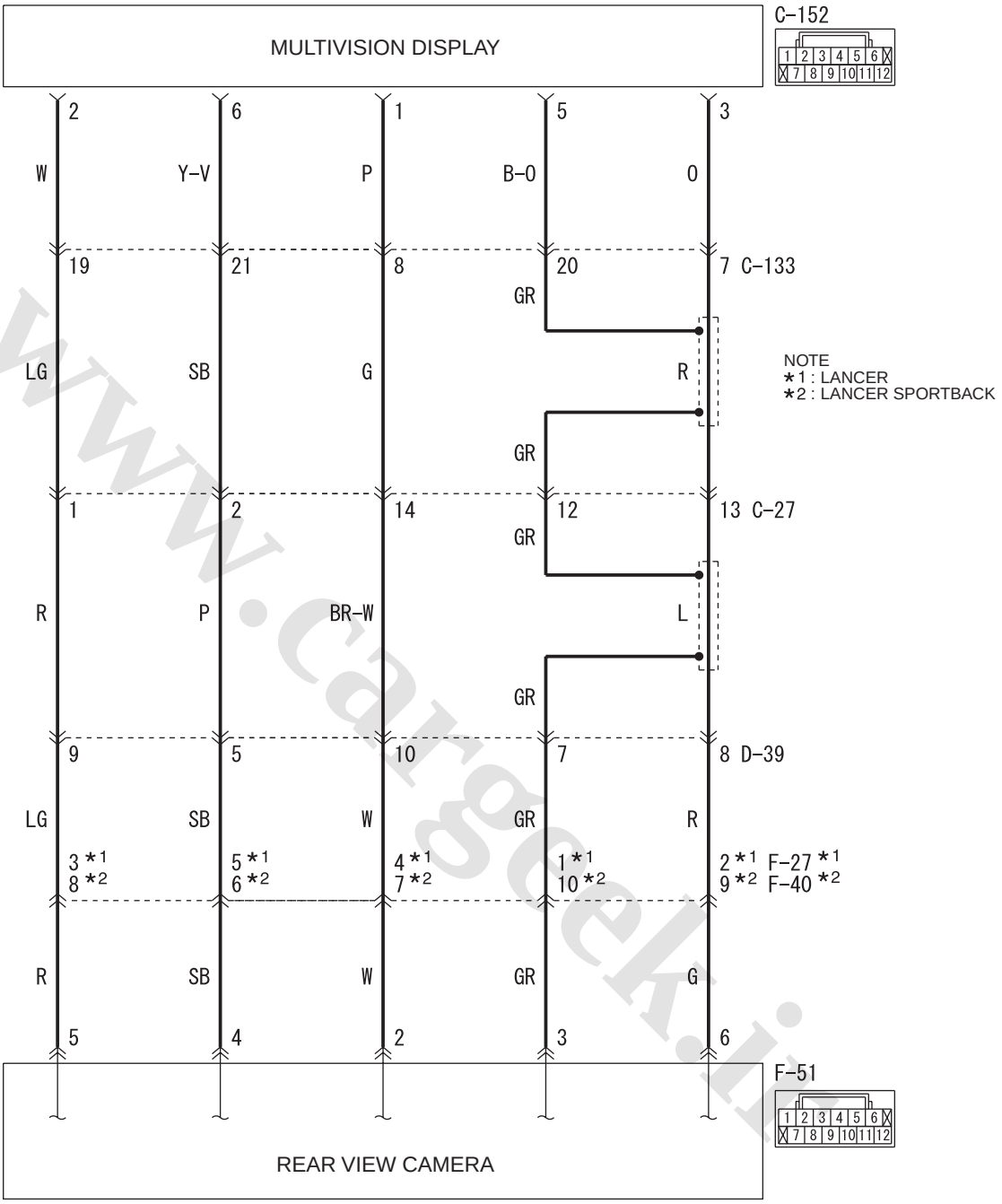

Wire colour code
B : Black LG : Light green G : Green L : Blue W : White Y : Yellow SB : Sky blue
BR : Brown O : Orange GR : Grey R : Red P : Pink V : Violet PU : Purple SI : Silver WDH54E020A

www.cargeek.ir

www.CarGeek.ir

Connector: B-110 <1800-DIESEL>

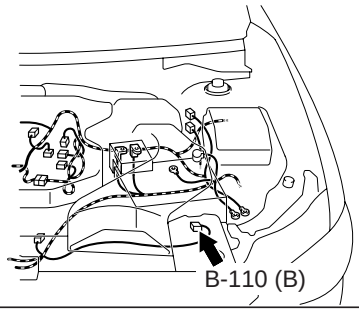

AC809223AB

Connectors: B-109, B-110 <1600>

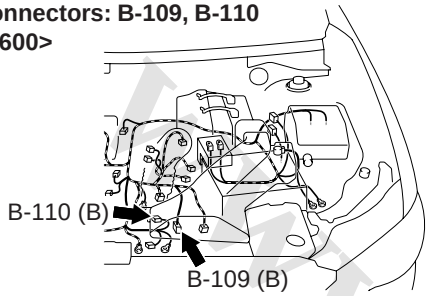

ACB02649AB

Connectors: B-109, B-110 <1800-petrol-SOHC>

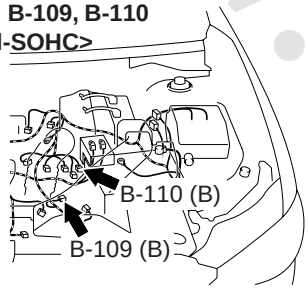

ACB02651AB

Connectors: B-109, B-110 <1800-petrol-DOHC, 2000>

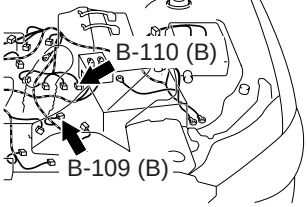

ACB02653AB

Connectors: C-143, C-152 <LHD>

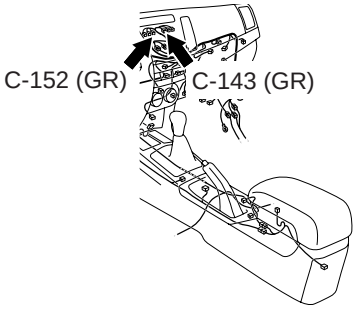

ACB02646AJ

Connectors: C-143, C-152 <RHD>

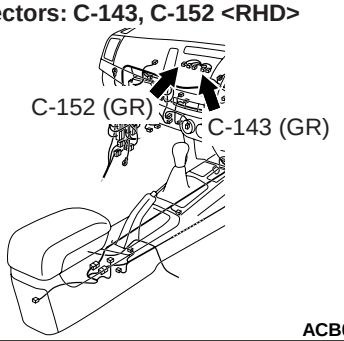

ACB02648AK

Connectors: C-304, C-311, C-313 <LHD>
ETACS-ECU

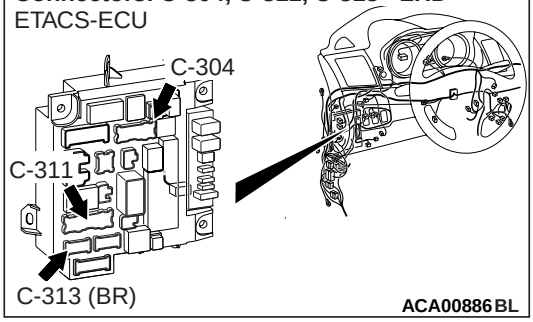

ACA00886BL

Connectors: C-304, C-311, C-313 <RHD>
ETACS-ECU

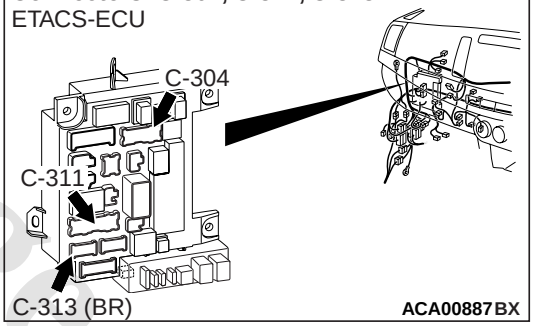

ACA00887BX

Connector: F-51 <LANCER>

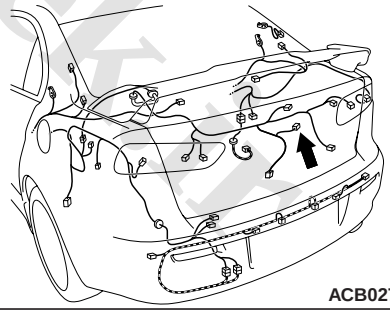

ACB02748AB

Connector: F-51 <LANCER SPORTBACK>

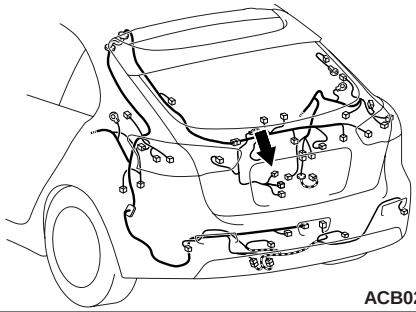

ACB02749AB

www.cargeek.ir

www.CarGeek.ir

COMMENTS ON TROUBLE SYMPTOM

When the screen of rear view camera is not shown even if the shift lever <M/T> or selector lever <CVT, A/T> is "R" (Reverse) position, the rear view camera, the wiring harness, connectors, back-up lamp switch or multivision display may be defective.

PROBABLE CAUSES

- Damaged harness wires and connectors
- Malfunction of the back-up lamp switch <M/T>
- Malfunction of the inhibitor switch <CVT, A/T>
- Malfunction of the rear view camera
- Malfunction of the multivision display

DIAGNOSIS PROCEDURE

STEP 1. M.U.T.-III other system diagnosis code

Check again if the diagnosis code is set to the ETACS-ECU.

Q: Is the diagnosis code set?

YES : Diagnose the ETACS-ECU (Refer to GROUP 54A – ETACS-ECU – Troubleshooting).

NO : Go to Step 2.

STEP 2. M.U.T.-III data list

Check if ETACS-ECU related signal is set.

- Turn the ignition switch to the ON position.

Item No.	Item name	Normal condition
254	IG voltage	System voltage

OK: Normal condition is displayed.

Q: Is the check result normal?

YES : Go to Step 3.

NO : Refer to ETACS – Inspection Procedure 2 "The ignition switch (IG1) signal is not received" .

STEP 3. M.U.T.-III data list

Check if ETACS-ECU related signal is set.

- Turn the ignition switch to the ON position.
- selector lever<CVT, A/T> or shift lever <M/T> is "R" (Reverse) position

Item No.	Item name	Normal condition
289	Backup lamp or shift reveres SW	ON

OK: Normal condition is displayed.

Q: Is the check result normal?

YES : Go to step 10.

NO : Go to step 4.

STEP 4. Connector check: C-313 ETACS-ECU connector and B-110 back-up lamp switch connector <M/T> or B-109 inhibitor switch connector <CVT, A/T>.

Q: Is the check result normal?

YES : Go to Step 5.

NO : Repair the defective connector.

STEP 5. Check the wiring harness between C-313 ETACS-ECU connector terminal No. 4 and B-08 back-up lamp switch connector terminal No. 2 <M/T> or B-121 inhibitor switch connector terminal No. 3 <CVT, A/T>.

- Check the communication lines for open circuit and short circuit.

NOTE: Before the wiring harness inspection, inspect the A-11 <4A9, 4J1, 4B1>, A-60 <4N1> and C-31 intermediate connectors, and repair if necessary.

Q: Is the check result normal?

YES : Go to Step 6.

NO : Repair the wiring harness.

STEP 6. Connector check: C-304 ETACS-ECU connector .

Q: Is the check result normal?

YES : Go to Step 7.

NO : Repair the defective connector.

STEP 7. Check the wiring harness between C-304 ETACS-ECU connector terminal No. 2 and B-110 back-up lamp switch <M/T> connector terminal No. 1 or B-109 inhibitor switch <CVT, A/T> connector terminal No. 9 <4J1, 4B1> or 7 <4A9>.

- Check the communication lines for open circuit and short circuit.

NOTE: Before the wiring harness inspection, inspect the A-11 <4A9, 4J1, 4B1> or A-60 <4N1> intermediate connectors, and repair if necessary.

Q: Is the check result normal?

YES <CVT, A/T> : Go to Step 8.

YES <M/T> : Go to Step 9.

NO : Repair the wiring harness.

www.cargeek.ir

www.CarGeek.ir

STEP 8. Check the inhibitor switch and the control cable.

Check that the inhibitor switch and the control cable are adjusted correctly. (GROUP 23A– On-vehicle Service, inhibitor switch and control cable adjustment <M/T> or GROUP 23C– On-vehicle Service, inhibitor switch and control cable adjustment <CVT, A/T>)

Q: Is the check result normal?
YES : Go to Step 9.
NO : Adjust the inhibitor switch and the control cable.

STEP 9. Check the back-up lamp switch <M/T> or inhibitor switch <CVT>.

- Check the continuity of the back-up lamp switch. <M/T> (Refer to GROUP 22B – Transmission, Transmission inspection)
- Check the continuity of the inhibitor switch. <CVT, A/T> (Refer to GROUP 23A – On-vehicle service, Inhibitor switch continuity check)

Q: Is the check result normal?
YES : The trouble can be an intermittent malfunction (Refer to GROUP 00 – How to use Troubleshooting/inspection Service Points – How to Cope with Intermittent Malfunction).
NO : Replace the back-up lamp switch <M/T> or inhibitor switch <CVT, A/T>

STEP 10. Confirmation in MMCS service mode.

(1) Display the VEHICLE SIGNAL CHECK screen. (Refer to .)
(2) Move the selector lever <CVT, A/T> or shift lever <M/T> to the R position and check whether "ON" is displayed.

Q: Is the check result normal?
YES : Go to Step 13.
NO : Go to Step 11.

STEP 11. Connector check: C-143 multivision display connector and C-311 ETACS-ECU connector.

Q: Is the check result normal?
YES : Go to Step 12.
NO : Repair the defective connector.

STEP 12. Check the wiring harness between C-311 ETACS-ECU connector terminal No. 2 and C-143 multivision display connector terminal No. 24.

- Check the communication lines for open circuit and short circuit.

NOTE: Before the wiring harness inspection, inspect the C-28 and C-133 intermediate connector ,and repair if necessary.

Q: Is the check result normal?
YES : Go to step 13.
NO : Repair the wiring harness.

STEP 13. Confirmation in MMCS service mode

Perform "Network/Connect Line Check" in the MMCS service mode to check that the communication and wire connection with the rear view camera are OK (Refer to).

NOTE: The rear view camera is shown as "rear camera" on the "Network/Connect Line Check" in the service mode of MMCS.

Q: Is the check result normal?
YES : Go to Step 16.
NO : Go to Step 14.

STEP 14. Connector check: F-51 rear view camera connector and C-152 multivision display connector.

Q: Is the check result normal?
YES : Go to Step 15.
NO : Repair the defective connector.

STEP 15. Check the wiring harness between F-51 rear view camera connector terminal No. 6, 2, 5, 4 and C-152 multivision display connector terminal No. 3, 1, 2, 6.

- Check the communication lines for open circuit and short circuit.

NOTE: Before the wiring harness inspection, inspect the C-27, C-133, D-39, F-27 <LANCER> and F-40 <LANCER SPORTBACK> intermediate connectors, and repair if necessary.

Q: Is the check result normal?
YES : Go to Step 16.
NO : Repair the wiring harness.

STEP 16. Confirmation in MMCS service mode.

(1) Display the VEHICLE SIGNAL CHECK screen. (Refer to .)
(2) Move the selector lever <CVT, A/T> or shift lever

www.cargeek.ir

www.CarGeek.ir

<M/T> to the R position and check whether "ON" is displayed.

Q: Is the check result normal?
YES : Go to Step 17.
NO : Replace the multivision display.

STEP 17. Trouble symptom recheck
Check that the display of rear view camera is shown normally.

Q: Is the check result normal?
YES : The trouble can be an intermittent malfunction (Refer to GROUP 00 – How to use Troubleshooting/inspection Service Points – How to Cope with Intermittent Malfunction).
NO : Replace the rear view camera temporarily and go to Step 18.

STEP 18. Trouble symptom recheck
Check that the display of rear view camera is shown normally.

Q: Is the check result normal?
YES : Replace the rear view camera.
NO : Replace the multivision display.

www.cargeek.ir
www.cargeek.ir

www.CarGeek.ir

Rear view camera image is not correctly displayed. <Vehicles without MMCS>

⚠ CAUTION

Before replacing the rear view camera or inside rear view mirror assembly, ensure that the power supply circuit, the earth circuit, and the communication circuit are normal.

www.cargeek.ir

www.cargeek.ir

www.CarGeek.ir

Rear View Camera Circuit

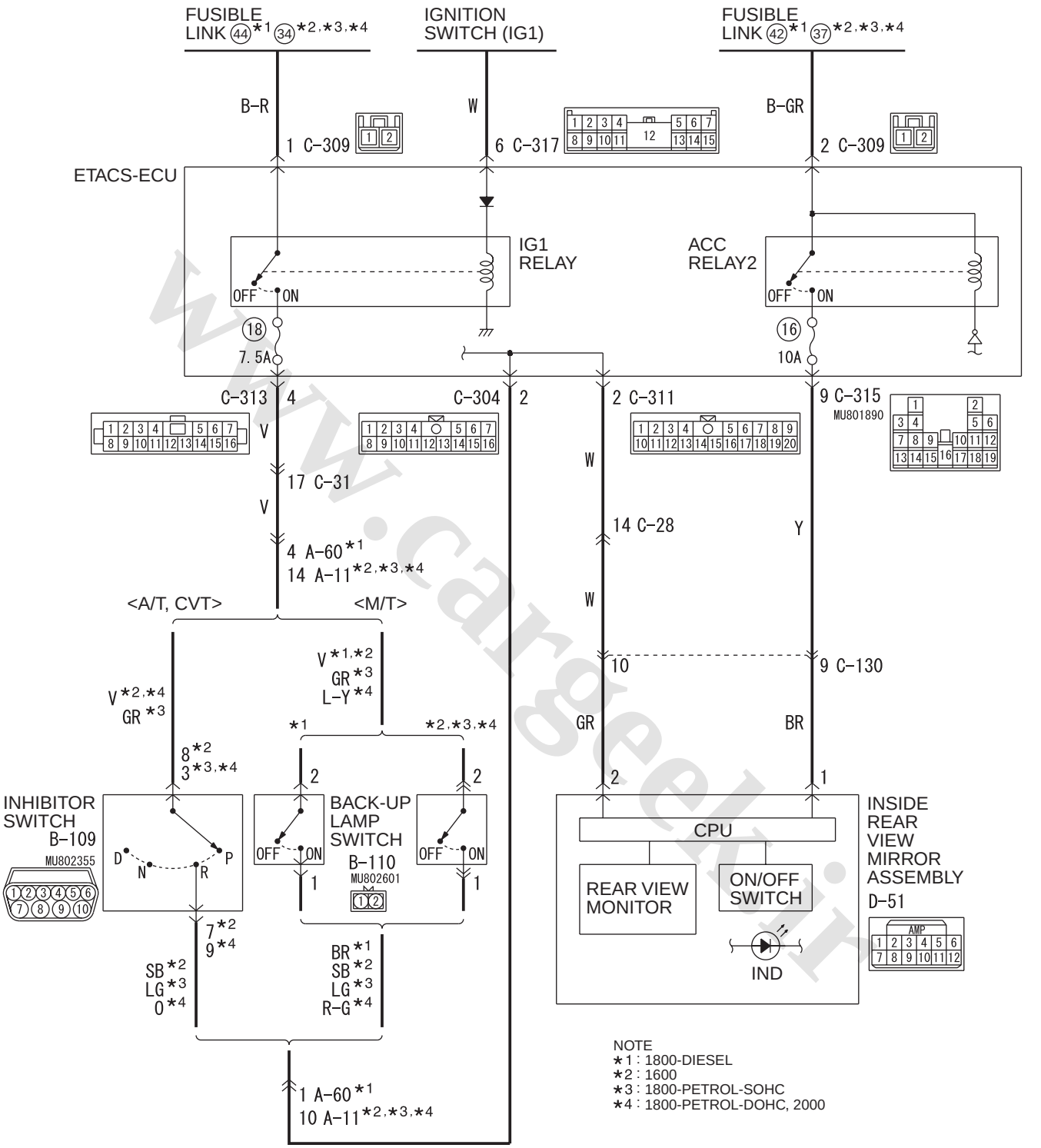

www.cargeek.ir

www.CarGeek.ir

Rear View Camera Circuit

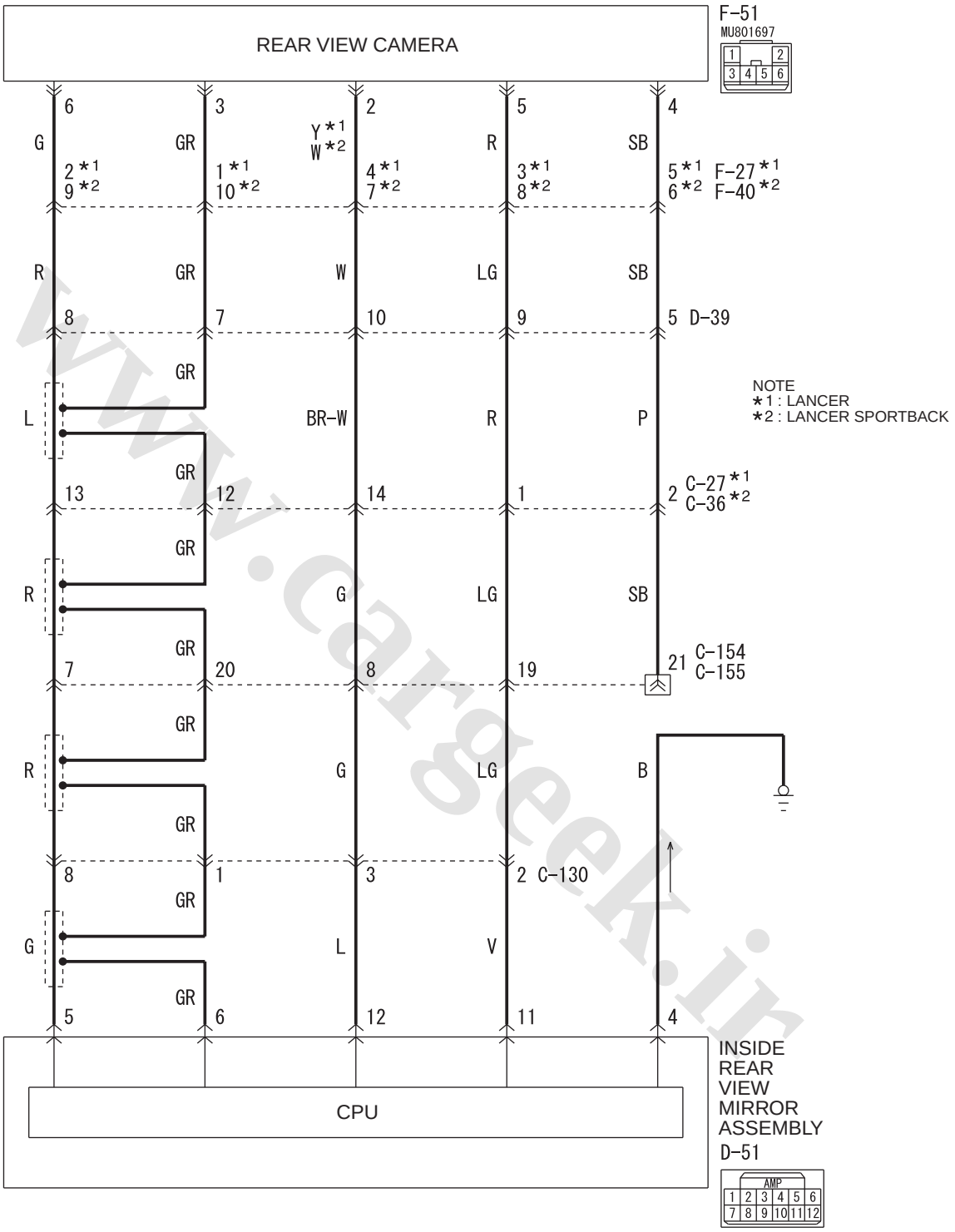

Wire colour code
B : Black LG : Light green G : Green L : Blue W : White Y : Yellow SB : Sky blue
BR : Brown O : Orange GR : Grey R : Red P : Pink V : Violet PU : Purple SI : Silver

WDH54E018A

www.cargeek.ir

www.CarGeek.ir

Connector: B-110 <1800-DIESEL>

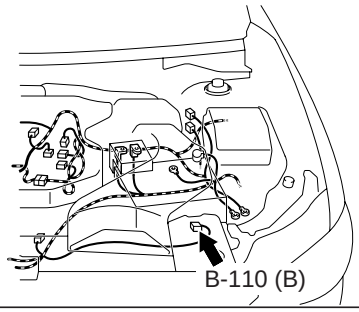

Connectors: B-109, B-110 <1600>

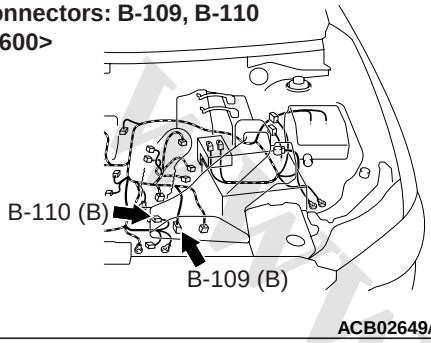

Connectors: B-109, B-110 <1800-petrol-SOHC>

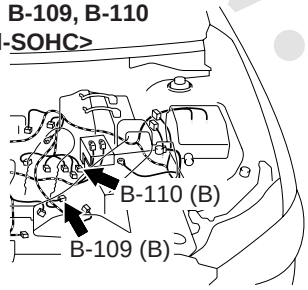

Connectors: B-109, B-110 <1800-petrol-DOHC, 2000>

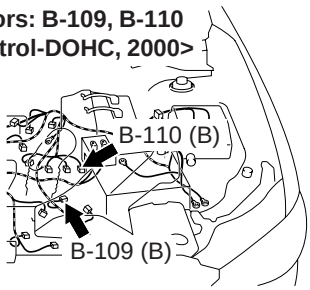

Connectors: C-304, C-311, C-313, C-315 <LHD>

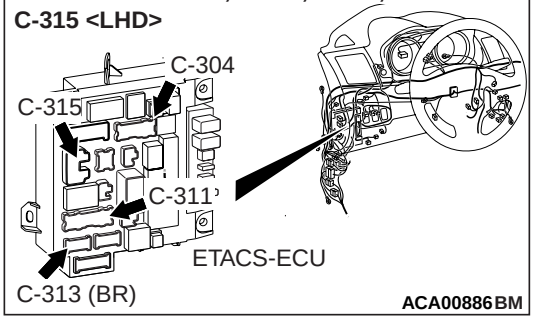

Connectors: C-304, C-311, C-313, C-315 <RHD>

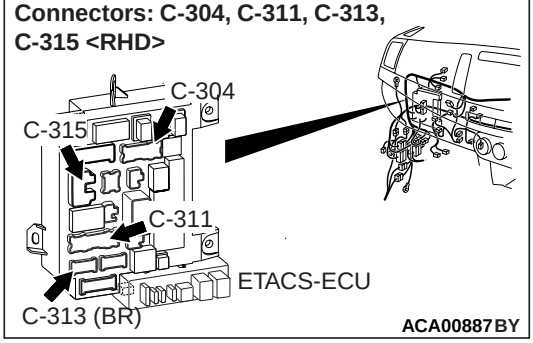

Connector: F-51 <LANCER>

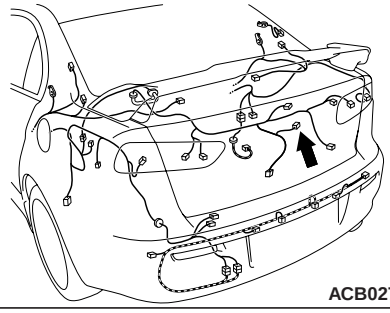

Connector: F-51 <LANCER SPORTBACK>

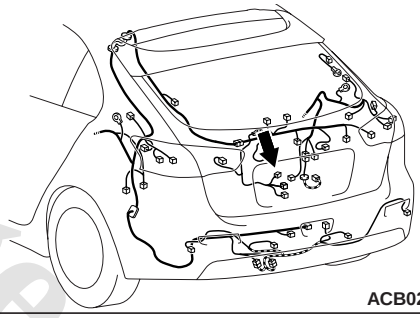

COMMENTS ON TROUBLE SYMPTOM

When the screen of rear view camera is not shown even if the selector lever <CVT, A/T> or shift lever <M/T> is "R" (Reverse) position, the rear view camera, the inside rear view mirror assembly, the wiring harness, connectors, back-up lamp switch <M/T> or inhibitor switch <CVT, A/T> may be defective.

NOTE: If the indicator on the inside rear view mirror assembly is illuminated in orange but the monitor is not displayed, this is not a malfunction as the monitor has been set to always stay OFF.

PROBABLE CAUSES

- Damaged harness wires and connectors
- Malfunction of the back-up lamp switch <M/T>
- Malfunction of the inhibitor switch <CVT, A/T>
- Malfunction of the rear view camera
- Malfunction of the inside rear view mirror assembly

www.cargeek.ir

www.CarGeek.ir

DIAGNOSIS PROCEDURE

STEP 1. Check the inside rear view mirror assembly.

Check the illumination condition of the indicator.
(1) Turn the ignition switch to the "ON" position.
(2) Move the selector lever <CVT, A/T> or shift lever <M/T> to the "R" (Reverse) position.
(3) Check that the indicator of the inside rear view mirror assembly illuminates.

Q: Is the check result normal?
YES : Go to Step 2.
NO : Go to Step 4.

STEP 2. Check the inside rear view mirror assembly.

Check the illumination condition of the indicator.
(1) Turn the ignition switch to the "ON" position.
(2) Move the selector lever <CVT, A/T> or shift lever <M/T> to the "R" (Reverse) position.
(3) Check that the indicator of the inside rear view mirror assembly illuminates in green.

Q: Is the check result normal?
YES : Go to Step 22.
NO : Go to Step 3.

STEP 3. Check the inside rear view mirror assembly.

Check that the rear view screen is displayed on the monitor of the inside rear view mirror assembly.
(1) Turn the ignition switch to the "ON" position.
(2) Move the selector lever <CVT, A/T> or shift lever <M/T> to the "R" (Reverse) position.
(3) Press the switch of the inside rear view mirror assembly and check that the rear view screen is displayed.

NOTE: The illumination colour of the indicator of the inside rear view mirror assembly changes from orange to green.

Q: Is the check result normal?
YES : Go to Step 22.
NO : Go to Step 4.

STEP 4. M.U.T.-III other system diagnosis code

Check again if the diagnosis code is set to the ETACS-ECU.

Q: Is the diagnosis code set?
YES : Diagnose the ETACS-ECU (Refer to GROUP 54A – ETACS-ECU – Troubleshooting).
NO : Go to Step 5.

STEP 5. M.U.T.-III other system data list

Check the input signal of ACC relay.
- Turn the ignition switch to the "ACC" position.

Item No.	Item name	Normal condition
Item 288	ACC switch	ON

OK: Normal condition is displayed.

Q: Is the check result normal?
YES : Go to Step 6.
NO : Refer to ETACS – Input Signal Procedure 1 "The ignition switch (ACC) signal is not sent to the ETACS-ECU" .

STEP 6. M.U.T.-III data list

Check if ETACS-ECU related signal is set.
- Turn the ignition switch to the "ON" position.

Item No.	Item name	Normal condition
254	IG voltage	System voltage

OK: Normal condition is displayed.

Q: Is the check result normal?
YES : Go to Step 7.
NO : Refer to ETACS – Inspection Procedure 2 "The ignition switch (IG1) signal is not received" .

STEP 7. M.U.T.-III data list

Check if ETACS-ECU related signal is set.
- Turn the ignition switch to the "ON" position.
- selector lever <CVT, A/T> or shift lever <M/T> is "R" (Reverse) position

Item No.	Item name	Normal condition
289	Backup lamp or shift reveres SW	ON

OK: Normal condition is displayed.

Q: Is the check result normal?
YES : Go to Step 8.
NO : Go to Step 14.

STEP 8. Connector check: D-46 inside rear view mirror assembly connector.

Q: Is the check result normal?
YES : Go to Step 9.
NO : Repair the defective connector.

www.cargeek.ir

www.CarGeek.ir

STEP 9. Voltage measurement at D-46 inside rear view mirror assembly connector.

(1) Disconnect the connector, and measure at the wiring harness-side connector.
(2) Turn the ignition switch to the "ACC" position.
(3) Voltage between D-46 inside rear view mirror assembly connector terminal No. 1 and the body earth

OK: System voltage

Q: Is the check result normal?
YES : Go to Step 11.
NO : Go to Step 10.

STEP 10. Check the wiring harness between D-46 inside rear view mirror assembly connector terminal No. 1 and C-315 ETACS-ECU connector terminal No. 9

- Check the power supply lines (battery power supply) for open circuit and short circuit.

NOTE: Before the wiring harness inspection, inspect the C-130 intermediate connector, and repair if necessary.

Q: Is the check result normal?
YES : The trouble can be an intermittent malfunction (Refer to GROUP 00 – How to use Troubleshooting/inspection Service Points – How to Cope with Intermittent Malfunction).
NO : Repair the wiring harness.

STEP 11. Resistance measurement at D-46 inside rear view mirror assembly connector.

(1) Disconnect D-46 inside rear view mirror assembly connector, and measure the resistance available at the wiring harness side of the connector.
(2) Check the continuity between terminal No. 4 and body earth.

OK: Continuity exists (2 Ω or less)

Q: Is the check result normal?
YES : Go to Step 13.
NO : Go to Step 12.

STEP 12. Check the wiring harness between D-46 inside rear view mirror assembly connector terminal No. 4 and body earth.

- Check the earth wires for open circuit.

Q: Is the check result normal?
YES : The trouble can be an intermittent malfunction (Refer to GROUP 00 – How to use Troubleshooting/inspection Service Points – How to Cope with Intermittent Malfunction).
NO : Repair the wiring harness.

STEP 13. Voltage measurement at D-46 inside rear view mirror assembly connector.

(1) Disconnect the connector, and measure at the wiring harness-side connector.
(2) Turn the ignition switch to the "ON" position.
(3) Move the selector lever <CVT, A/T> or shift lever <M/T> to the "R" (Reverse) position.
(4) Voltage between D-46 inside rear view mirror assembly connector terminal No. 2 and the body earth

OK: System voltage

Q: Is the check result normal?
YES : Go to Step 22.
NO : Go to Step 20.

STEP 14. Connector check: C-313 ETACS-ECU connector and B-110 back-up lamp switch connector <M/T> or B-109 inhibitor switch connector <CVT, A/T>.

Q: Is the check result normal?
YES : Go to Step 15.
NO : Repair the defective connector.

STEP 15. Check the wiring harness between C-313 ETACS-ECU connector terminal No. 4 and B-110 back-up lamp switch <M/T> connector terminal No. 2 or B-109 inhibitor switch <CVT, A/T> connector terminal No. 3 <4J1, 4B1> or 8 <4A9>.

- Check the communication lines for open circuit and short circuit.

NOTE: Before the wiring harness inspection, inspect the A-11 <4A9, 4J1, 4B1>, A-60 <4N1> and C-31 intermediate connectors, and repair if necessary.

Q: Is the check result normal?
YES : Go to Step 16.
NO : Repair the wiring harness.

STEP 16. Connector check: C-304 ETACS-ECU connector .

Q: Is the check result normal?
YES : Go to Step 17.
NO : Repair the defective connector.

www.cargeek.ir

www.CarGeek.ir

STEP 17. Check the wiring harness between C-304 ETACS-ECU connector terminal No. 2 and B-110 back-up lamp switch <M/T> connector terminal No. 1 or B-109 inhibitor switch <CVT, A/T> connector terminal No. 9 <4J1, 4B1> or 7 <4A9>.

- Check the communication lines for open circuit and short circuit.

NOTE: Before the wiring harness inspection, inspect the A-11 <4A9, 4J1, 4B1> or A-60 <4N1> intermediate connectors, and repair if necessary.

Q: Is the check result normal?
YES <CVT, A/T> : Go to Step 18.
YES <M/T> : Go to Step 19.
NO : Repair the wiring harness.

STEP 18. Check the inhibitor switch and the control cable.

Check that the inhibitor switch and the control cable are adjusted correctly. (GROUP 23A– On-vehicle Service, inhibitor switch and control cable adjustment <M/T> or GROUP 23C– On-vehicle Service, inhibitor switch and control cable adjustment <CVT, A/T>)

Q: Is the check result normal?
YES : Go to Step 19.
NO : Adjust the inhibitor switch and the control cable.

STEP 19. Check the back-up lamp switch <M/T> or inhibitor switch <CVT, A/T>.

- Check the continuity of the back-up lamp switch. <M/T> (Refer to GROUP 22B – Transmission, Transmission inspection).
- Check the continuity of the inhibitor switch. <CVT, A/T> (Refer to GROUP 23A – On-vehicle service, Inhibitor switch continuity check).

Q: Is the check result normal?
YES : The trouble can be an intermittent malfunction (Refer to GROUP 00 – How to use Troubleshooting/inspection Service Points – How to Cope with Intermittent Malfunction).
NO : Replace the back-up lamp switch <M/T> or inhibitor switch <CVT, A/T>

STEP 20. Connector check: C-311 ETACS-ECU connector.

Q: Is the check result normal?
YES : Go to Step 21.
NO : Repair the defective connector.

STEP 21. Check the wiring harness between C-311 ETACS-ECU connector terminal No. 2 and D-46 inside rear view mirror assembly connector terminal No. 2.

- Check the communication lines for open circuit and short circuit.

NOTE: Before the wiring harness inspection, inspect the C-28, C-130 intermediate connectors, and repair if necessary.

Q: Is the check result normal?
YES : Go to Step 22.
NO : Repair the wiring harness.

STEP 22. Connector check: F-51 rear view camera connector and D-46 inside rear view mirror assembly connector.

Q: Is the check result normal?
YES : Go to Step 23.
NO : Repair the defective connector.

STEP 23. Check the wiring harness between F-51 rear view camera connector terminal No. 2, 3, 5, 6 and D-46 inside rear view mirror assembly connector terminal No. 12, 6, 11, 5.

- Check the communication lines for open circuit and short circuit.

NOTE: Before the wiring harness inspection, inspect the C-27 <LANCER>, C-36 <LANCER SPORTBACK>, C-130, C-154, C-155, D-39, F-27 <LANCER> and F-40 <LANCER SPORTBACK> intermediate connectors, and repair if necessary.

Q: Is the check result normal?
YES : Go to Step 24.
NO : Repair the wiring harness.

STEP 24. Trouble symptom recheck

Check that the display of rear view camera is shown normally.

Q: Is the check result normal?
YES : The trouble can be an intermittent malfunction (Refer to GROUP 00 – How to use Troubleshooting/inspection Service Points – How to Cope with Intermittent Malfunction).
NO : Replace the rear view camera temporarily and go to Step 25.

www.cargeek.ir

www.CarGeek.ir

STEP 25. Trouble symptom recheck
Check that the display of rear view camera is shown normally.

Q: Is the check result normal?
YES : Replace the rear view camera.
NO : Replace the inside rear view mirror assembly.

ON-VEHICLE SERVICE

CAMERA SETTING

M1540905700086

Refer to MMCS – service mode .

REMOVAL AND INSTALLATION

M1540901800144

<LANCER>

Pre-removal operation	Post-installation operation
• Removal of trunk lid trim (Refer to GROUP 52A – Interior trim)	• Installation of trunk lid trim (Refer to GROUP 52A – Interior trim)

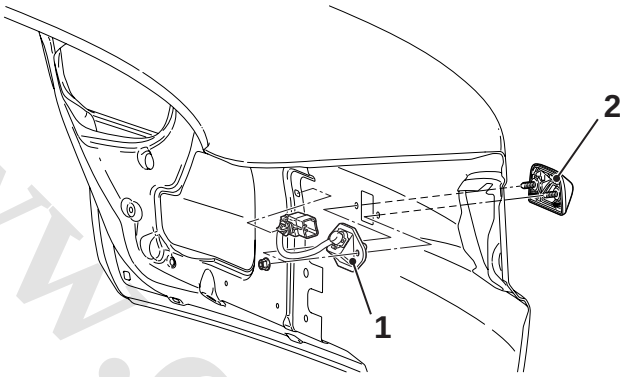

AC705028AD

Removal Steps
1. Rear view camera
2. Rear view camera cover

www.cargeek.ir
www.cargeek.ir

www.CarGeek.ir

<LANCER SPORTBACK>

Pre-removal operation	Post-installation operation
• Removal of tailgate lower trim (Refer to GROUP 52A – Tailgate trim)	• Installation of tailgate lower trim (Refer to GROUP 52A – Tailgate trim)

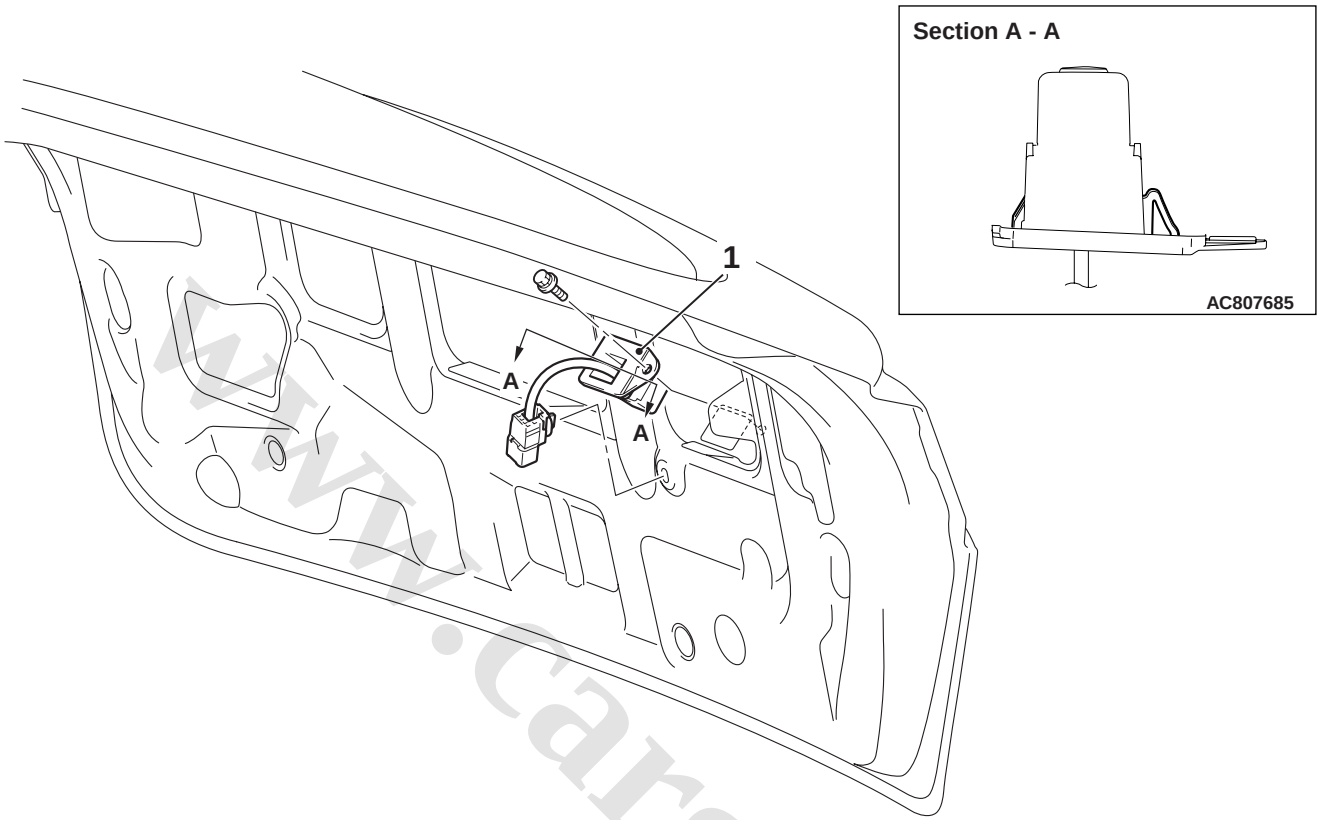

AC806135 AC

Removal Steps

<<**A**>> 1. Rear view camera

REMOVAL SERVICE POINT

<<A>>REAR VIEW CAMERA REMOVAL

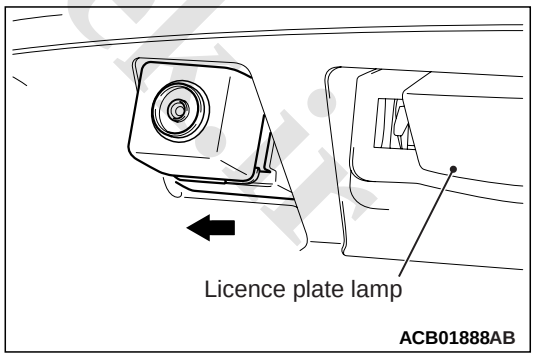

Wrap cloth or adhesive tape around a flat-tipped screwdriver. Then use the screwdriver to press the rear view camera to the left to remove it.

www.cargeek.ir

www.CarGeek.ir

ACCESSORY SOCKET AND CIGARETTE LIGHTER

SPECIAL TOOLS

M1542300700029

www.cargeek.ir

www.cargeek.ir

www.CarGeek.ir

Tool	Number	Name	Use
a 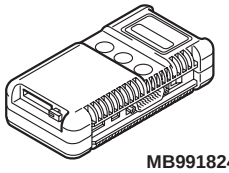 MB991824 b 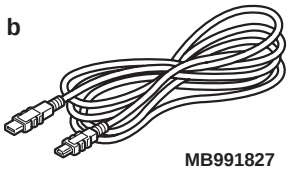 MB991827 c 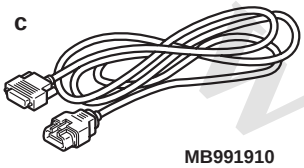 MB991910 d 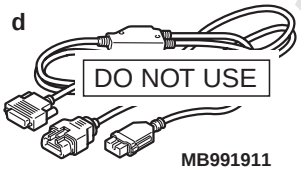 DO NOT USE MB991911 e 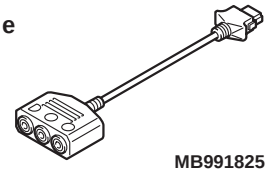 MB991825 f 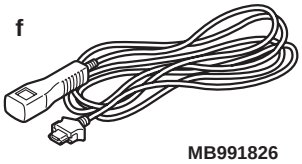 MB991826 MB991955	MB991955 a. MB991824 b. MB991827 c. MB991910 d. MB991911 e. MB991825 f. MB991826	M.U.T.-III sub-assembly a. Vehicle communication interface (V.C.I.) b. M.U.T.-III USB cable c. M.U.T.-III main harness A (for vehicles with CAN communication) d. M.U.T.-III main harness B (for vehicles without CAN communication) e. Measuring adapter harness f. M.U.T.-III trigger harness	⚠ CAUTION **For vehicles with CAN communication, use M.U.T.-III main harness A to send the simulated vehicle speed. If you connect M.U.T.-III main harness B instead, CAN communication does not function correctly.** M.U.T.-III diagnosis code display, service data display
a 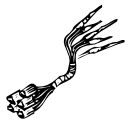 b 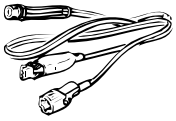 c 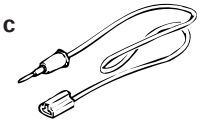 d DO NOT USE MB991223	MB991223 a. MB991219 b. MB991220 c. MB991221 d. MB991222	Wiring harness set a. Check harness b. LED harness c. LED harness adapter d. Probe	Continuity check and voltage measurement at wiring harness or connector a. For checking connector pin contact pressure b. For checking power supply circuit c. For checking power supply circuit d. For connecting a locally sourced tester

www.cargeek.ir

www.CarGeek.ir

Tool	Number	Name	Use
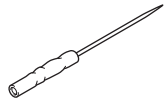 MB992006	MB992006	Extra fine probe	Continuity check and voltage measurement at wiring harness or connector

TROUBLESHOOTING

STANDARD FLOW OF DIAGNOSTIC TROUBLESHOOTING

M1542301100020

Refer to GROUP 00 – Contents of troubleshooting .

TROUBLE SYMPTOM CHART

M1542300800093

Trouble symptom	Inspection Procedure No.	Reference page
The accessory socket does not work. <Vehicles with accessory socket>	1	
The cigar lighter does not work.<Vehicles with cigar lighter>	2	

www.cargeek.ir
www.cargeek.ir

www.CarGeek.ir

SYMPTOM PROCEDURES

Inspection Procedure 1: The accessory socket does not work. <Vehicles with accessory socket>

⚠ CAUTION

Before replacing the ECU, ensure that the power supply circuit, the earth circuit and the communication circuit are normal.

Accessory Socket Circuit

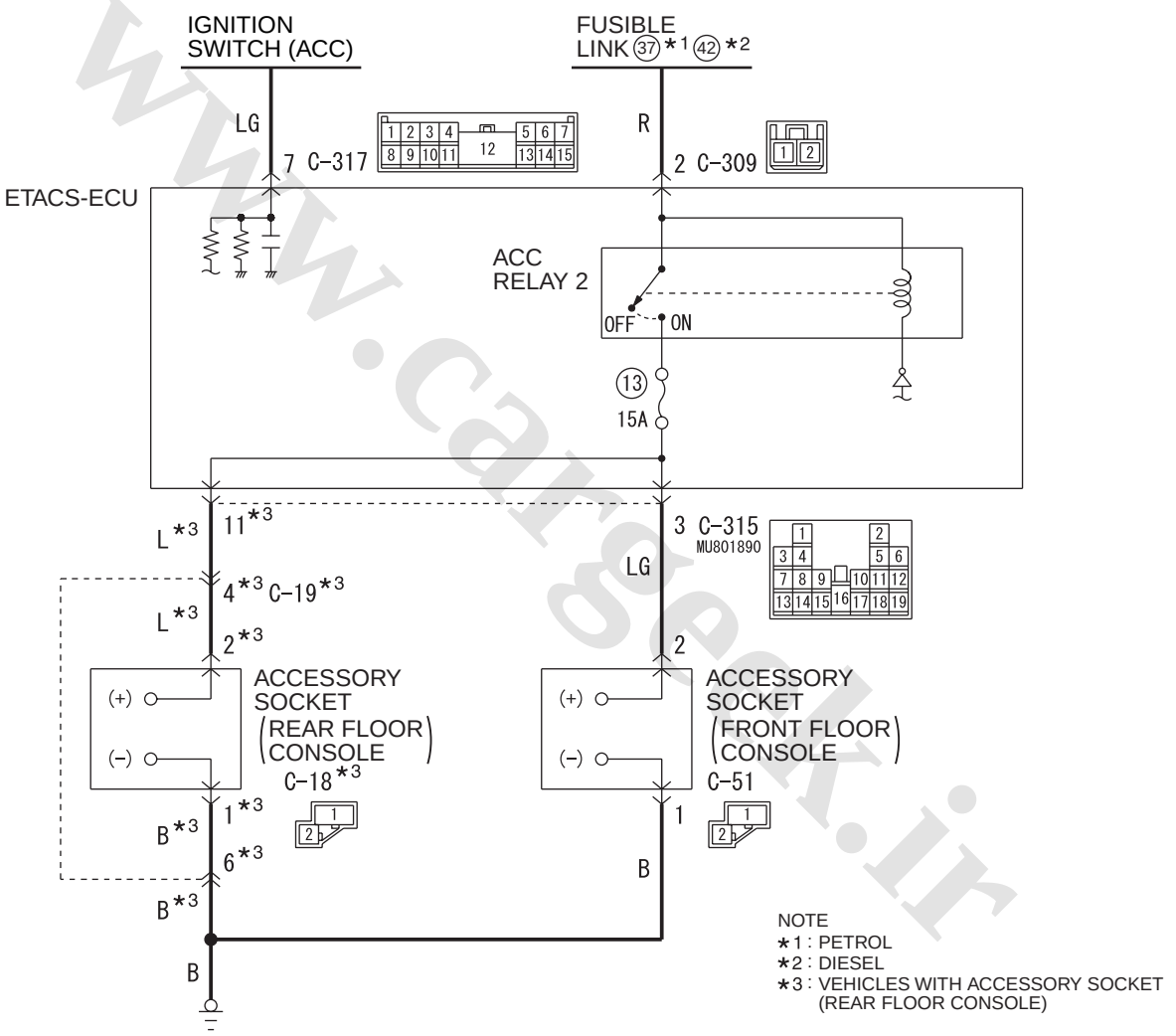

Wire colour code
B : Black LG : Light green G : Green L : Blue W : White Y : Yellow SB : Sky blue
BR : Brown O : Orange GR : Grey R : Red P : Pink V : Violet PU : Purple SI : Silver WAS54E000A

www.cargeek.ir

www.CarGeek.ir

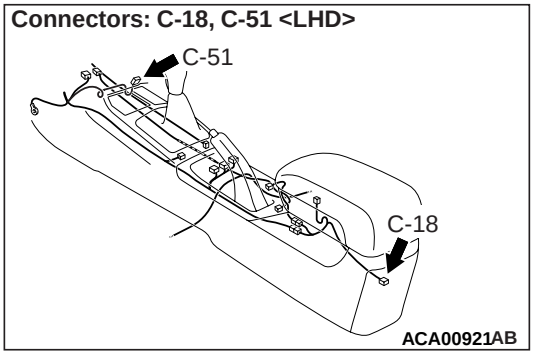

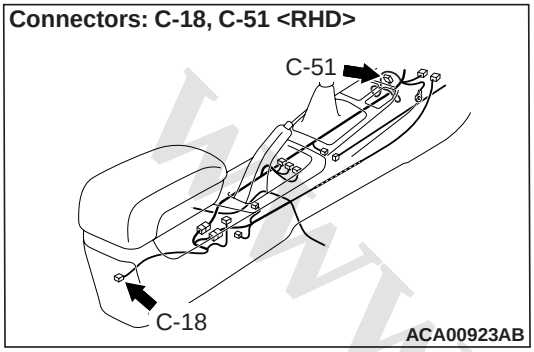

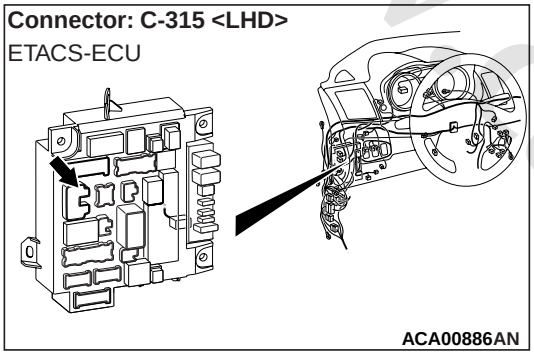

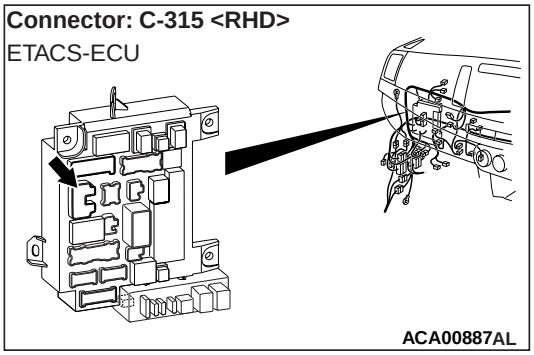

OPERATION

When the ignition switch is in the ON or ACC position, the accessory socket can be used.

NOTE: The maximum load of accessory socket is 120 W.

COMMENTS ON TROUBLE SYMPTOM

If the accessory socket cannot be used even when the ignition switch is in the ON or ACC position, ETACS-ECU, accessory socket itself, or accessory socket power supply circuit may have a problem.

PROBABLE CAUSES

- Malfunctions of accessory socket (front floor console)
- Malfunctions of accessory socket (rear floor console) <vehicles with accessory socket (rear floor console)>
- Malfunction of the ETACS-ECU
- Damaged harness wires and connectors

DIAGNOSIS PROCEDURE

STEP 1. M.U.T.-III other system diagnosis code

Check if the diagnosis code is set to the ETACS-ECU.

Q: Is the check result normal?

YES : Troubleshoot the ETACS-ECU. Refer to ETACS-ECU – Troubleshooting .

NO : Go to Step 2.

STEP 2. M.U.T.-III other system data list

Check the input signal of ACC relay. (ETACS-ECU)

- Turn the ignition switch to the ACC position.

Item No.	Item name	Normal condition
Item 288	ACC switch	ON

OK: Normal condition is displayed.

Q: Is the check result normal?

YES : Go to Step 3.

NO : Refer to ETACS – Input Signal Procedure 1 "The ignition switch (ACC) signal is not sent to the ETACS-ECU" .

STEP 3. Connector check: C-315 ETACS-ECU connector, C-51 accessory socket (front floor console) connector, C-18 accessory socket (rear floor console) connector <vehicles with accessory socket (rear console)>

Q: Is the check result normal?

YES : Go to Step 4.

NO : Repair the defective connector.

STEP 4. Voltage measurement at C-51 accessory socket (front floor console) connector and C-18 accessory socket (rear floor console) connector <vehicles with accessory socket (rear floor console)>.

(1) Disconnect the connector, and measure at the wiring harness-side connector.

(2) Turn the ignition switch to the "ACC" or "ON" position.

www.cargeek.ir

www.CarGeek.ir

(3) Voltage between C-51 accessory socket (front floor console) connector terminal No.2 and the body earth

OK: System voltage

(4) Voltage between C-18 accessory socket (rear floor console) connector terminal No.2 and the body earth <vehicles with accessory socket (rear floor console)>

OK: System voltage

Q: Is the check result normal?
YES : Go to Step 7.
NO <accessory socket (front floor console) side> : Go to Step 5.
NO <accessory socket (rear floor console) side> : Go to Step 6.

STEP 5. Check the wiring harness between C-51 accessory socket (front floor console) connector terminal No.2 and C-315 ETACS-ECU connector terminal No.3.

- Check the power supply lines (battery power supply) for open circuit and short circuit.

Q: Is the check result normal?
YES : Go to Step 7.
NO : Repair the wiring harness.

STEP 6. Check the wiring harness between C-18 accessory socket (rear floor console) connector terminal No.2 and C-315 ETACS-ECU connector terminal No.11.

- Check the power supply lines (battery power supply) for open circuit and short circuit.

NOTE: Check C-19 intermediate connector, and repair if necessary.

Q: Is the check result normal?
YES : Go to Step 7.
NO : Repair the wiring harness.

STEP 7. Resistance measurement at C-51 accessory socket (front floor console) connector and C-18 accessory socket (rear floor console) connector <vehicles with accessory socket (rear floor console)>.

(1) Disconnect the connector, and measure the resistance available at the wiring harness side of the connector.

(2) Check the continuity between C-51 accessory socket (front floor console) connector terminal No.1 and the body earth.

OK: Continuity exists (2 ohms or less)

(3) Check the continuity between C-18 accessory socket (rear floor console) connector terminal No.1 and the body earth. <vehicles with accessory socket (rear floor console)>

OK: Continuity exists (2 ohms or less)

Q: Is the check result normal?
YES : Go to Step 10.
NO <accessory socket (front floor console) side> : Go to Step 8.
NO <accessory socket (rear floor console) side> : Go to Step 9.

STEP 8. Check the wiring harness between C-51 accessory socket (front floor console) connector terminal No.1 and body earth.

- Check the body earth wires for open circuit.

Q: Is the check result normal?
YES : Go to Step 10.
NO : Repair the wiring harness.

STEP 9. Check the wiring harness between C-18 accessory socket (rear floor console) connector terminal No.1 and body earth.

- Check the body earth wires for open circuit.

NOTE: Check C-19 intermediate connector, and repair if necessary.

Q: Is the check result normal?
YES : Go to Step 10.
NO : Repair the wiring harness.

STEP 10. Retest the system

Check if the accessory socket power is turned ON.

Q: Is the check result normal?
YES : The trouble can be an intermittent malfunction (Refer to GROUP 00 – How to Use Troubleshooting/Inspection Service Points – How to Cope with Intermittent Malfunction).
NO : Replace the accessory socket.

www.cargeek.ir

www.CarGeek.ir

Inspection Procedure 2: The cigarette lighter does not work.<Vehicles with cigarette lighter>

⚠ CAUTION

Before replacing the ECU, ensure that the power supply circuit, the earth circuit and the communication circuit are normal.

Cigarette Lighter Circuit

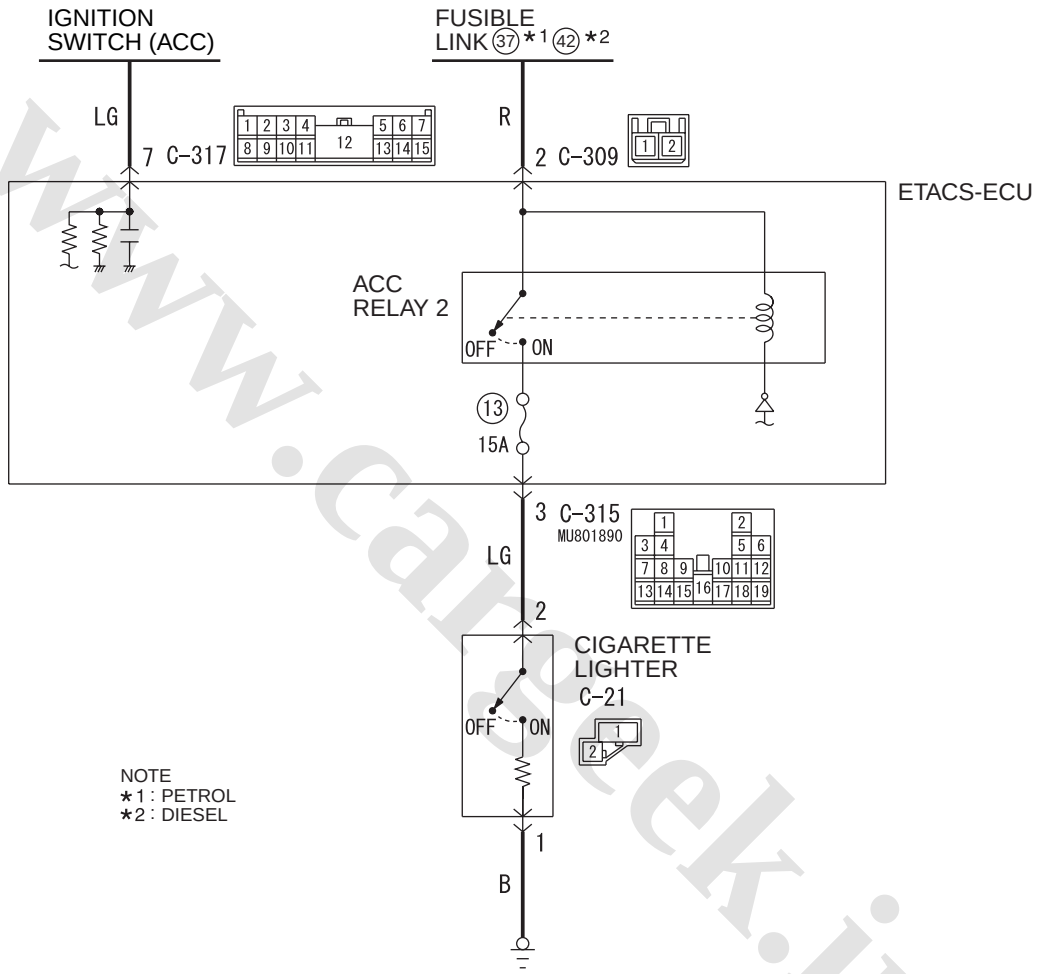

Wire colour code
B : Black LG : Light green G : Green L : Blue W : White Y : Yellow SB : Sky blue
BR : Brown O : Orange GR : Grey R : Red P : Pink V : Violet PU : Purple SI : Silver

WAS54E001A

Connector: C-21 <LHD>

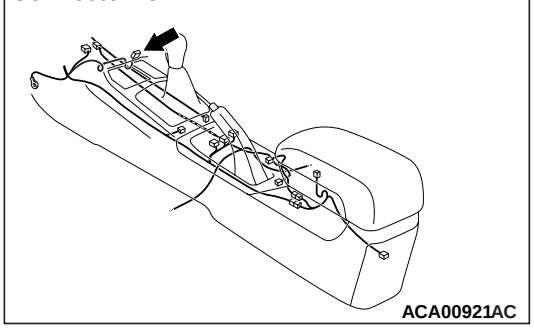

ACA00921AC

Connector: C-21 <RHD>

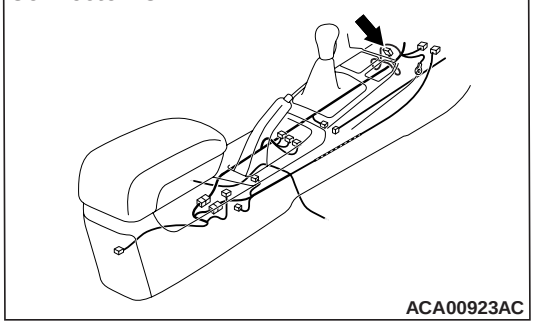

ACA00923AC

www.cargeek.ir

www.CarGeek.ir

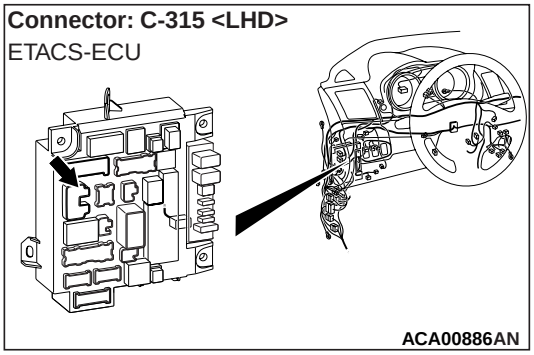

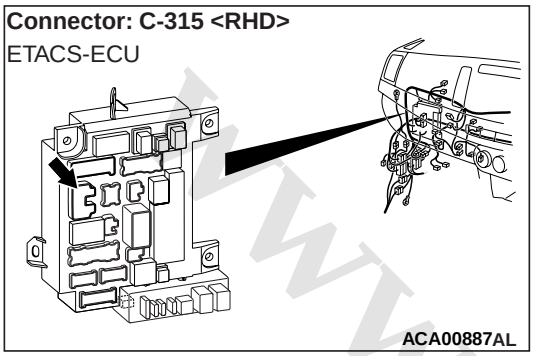

OPERATION

When the ignition switch is in the ON or ACC position, the cigarette lighter can be used.

COMMENTS ON TROUBLE SYMPTOM

If the cigarette lighter cannot be used even when the ignition switch is in the ON or ACC position, ETACS-ECU, cigarette lighter itself, or cigarette lighter power supply circuit may have a problem.

PROBABLE CAUSES

- Malfunctions of cigarette lighter
- Malfunction of the ETACS-ECU
- Damaged harness wires and connectors

DIAGNOSIS PROCEDURE

STEP 1. M.U.T.-III other system diagnosis code

Check if the diagnosis code is set to the ETACS-ECU.

Q: Is the check result normal?

YES : Troubleshoot the ETACS-ECU. Refer to ETACS-ECU – Troubleshooting .

NO : Go to Step 2.

STEP 2. M.U.T.-III other system data list

Check the input signal of ACC relay. (ETACS-ECU)

- Turn the ignition switch to the ACC position.

Item No.	Item name	Normal condition
Item 288	ACC switch	ON

OK: Normal condition is displayed.

Q: Is the check result normal?

YES : Go to Step 3.

NO : Refer to ETACS – Input Signal Procedure 1 "The ignition switch (ACC) signal is not sent to the ETACS-ECU" .

STEP 3. Cigarette lighter check

Refer to .

Q: Is the check result normal?

YES : Go to Step 4.

NO : Replace the cigarette lighter. Go to Step 4.

STEP 4. Connector check: C-315 ETACS-ECU connector, C-21 cigarette lighter connector

Q: Is the check result normal?

YES : Go to Step 5.

NO : Repair the defective connector.

STEP 5. Voltage measurement at C-21 cigarette lighter connector.

(1) Disconnect the connector, and measure at the wiring harness-side connector.
(2) Turn the ignition switch to the ACC position.
(3) Voltage between C-21 cigarette lighter connector terminal No.2 and the body earth

OK: System voltage

Q: Is the check result normal?

YES : Go to Step 7.

NO : Go to Step 6.

STEP 6. Check the wiring harness between C-21 cigarette lighter connector terminal No.2 and C-315 ETACS-ECU connector terminal No.3.

- Check the power supply lines (battery power supply) for open circuit and short circuit.

Q: Is the check result normal?

YES : Go to Step 7.

NO : Repair the wiring harness.

STEP 7. Resistance measurement at C-21 cigarette lighter connector.

(1) Disconnect the connector, and measure the

www.cargeek.ir

www.CarGeek.ir

resistance available at the wiring harness side of the connector.

(2) Check the continuity between terminal No.1 and body earth.

OK: Continuity exists (2 ohms or less)

Q: Is the check result normal?

YES : Go to Step 9.
NO : Go to Step 8.

STEP 8. Check the wiring harness between C-21 cigarette lighter connector terminal No.1 and body earth.

- Check the body earth wires for open circuit.

Q: Is the check result normal?

YES : Go to Step 9.
NO : Repair the wiring harness.

STEP 9. Retest the system

Check that the cigarette lighter operates normally.

Q: Is the check result normal?

YES : The trouble can be an intermittent malfunction (Refer to GROUP 00 – How to Use Troubleshooting/Inspection Service Points – How to Cope with Intermittent Malfunction).
NO : Replace the cigarette lighter.

REMOVAL AND INSTALLATION

M1542301400195

CIGAR LIGHTER <FLOOR CONSOLE PANEL ASSEMBLY>

Pre-removal operation	Post-installation operation
• Removal of floor console panel assembly (Refer to GROUP 52A – Floor Console Assembly)	• Installation of floor console panel assembly (Refer to GROUP 52A – Floor Console Assembly)

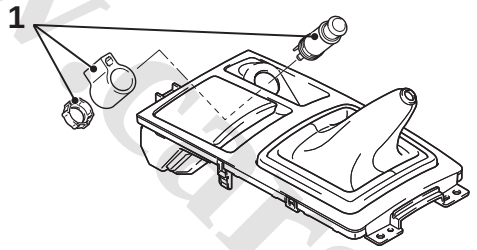

AC707557AB

Removal Steps

1. Cigar lighter

CIGAR LIGHTER <INSTRUMENT PANEL CENTRE LOWER ASSEMBLY>

Pre-removal operation	Post-installation operation
• Removal of Instrument panel centre lower (Refer to GROUP 52A – Instrument centre panel)	• Installation of Instrument panel centre lower (Refer to GROUP 52A – Instrument centre panel)

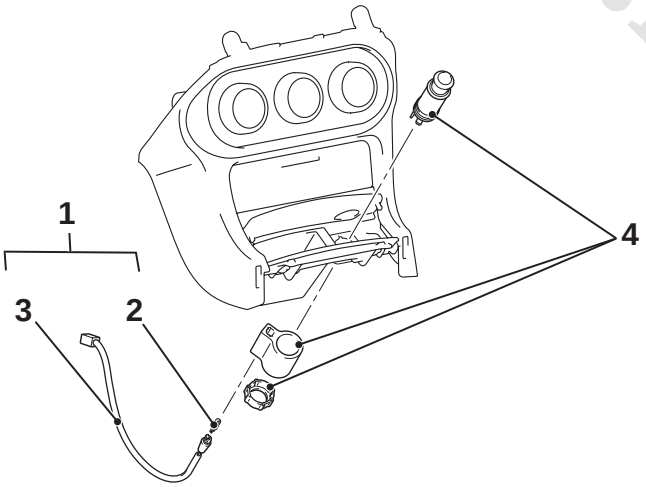

AC802457

www.cargeek.ir

www.CarGeek.ir

Removal Steps
1. Bulb/Harness (For illumination)
2. Bulb

Removal Steps (Continued)
3. Harness (For illumination)
4. Cigar lighter

ACCESSORY SOCKET <FLOOR CONSOLE PANEL ASSEMBLY>

Pre-removal operation	Post-installation operation
• Removal of floor console panel assembly (Refer to GROUP 52A – Floor Console Assembly)	• Installation of floor console panel assembly (Refer to GROUP 52A – Floor Console Assembly)

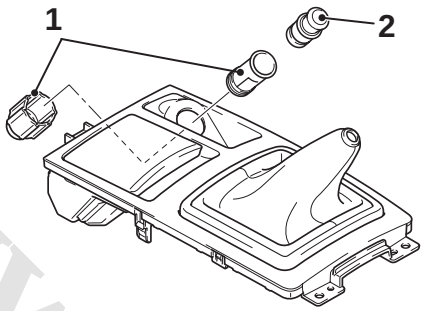

AC706787AB

Removal Steps
1. Accessory socket
2. Accessory socket cap

ACCESSORY SOCKET <INSTRUMENT PANEL CENTRE LOWER ASSEMBLY>

Pre-removal operation	Post-installation operation
• Removal of Instrument panel centre lower (Refer to GROUP 52A – Instrument centre panel)	• Installation of Instrument panel centre lower (Refer to GROUP 52A – Instrument centre panel)

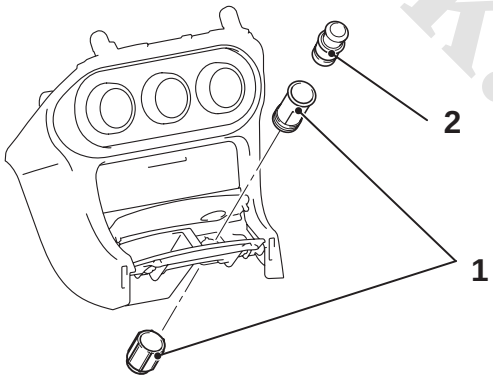

AC802078AB

Removal Steps
1. Accessory socket
2. Accessory socket cap

www.cargeek.ir

www.CarGeek.ir

ACCESSORY SOCKET <FLOOR CONSOLE ASSEMBLY>

Pre-removal operation	Post-installation operation
• Removal of Floor console assembly (Refer to GROUP 52A – Floor Console Assembly).	• Installation of Floor console assembly (Refer to GROUP 52A – Floor Console Assembly).

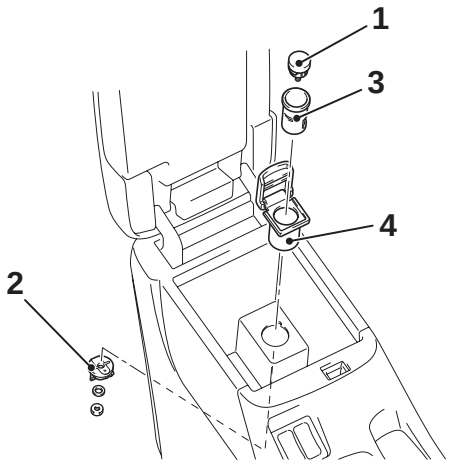

AC801717AB

Removal steps

<<**A**>>

1. Accessory socket (positive terminal assembly)
2. Accessory socket (negative terminal assembly)
3. Accessory socket (socket)
4. Accessory socket (cover)

REMOVAL SERVICE POINT

<<A>> REMOVAL OF ACCESSORY SOCKET <FLOOR CONSOLE ASSEMBLY>

Disassemble, and remove.

INSPECTION <VEHICLES WITH CIGAR LIGHTER>

M1542200200094

- Remove the plug and check the spot wear.
- Check if cigarette butts or foreign materials are deposited to the element.

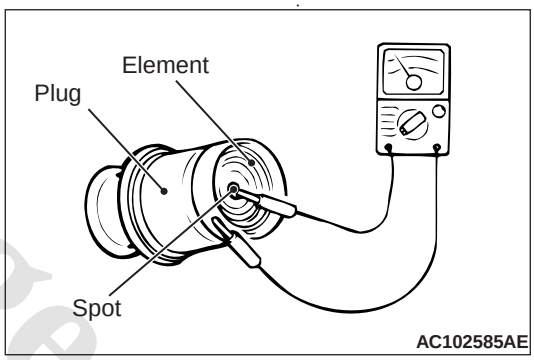

AC102585AE

Using an ohmmeter, check that the element resistance value is 1.7 Ω.

www.cargeek.ir

www.CarGeek.ir

COLUMN SWITCH

SPECIAL TOOLS

M1543100200261

www.cargeek.ir

www.cargeek.ir

www.CarGeek.ir

Tool	Number	Name	Use
a 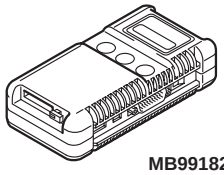 MB991824 b 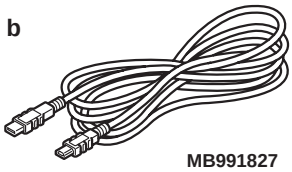 MB991827 c 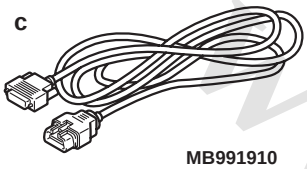 MB991910 d 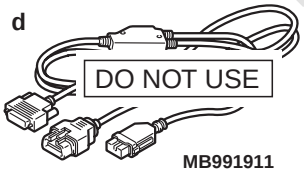 DO NOT USE MB991911 e 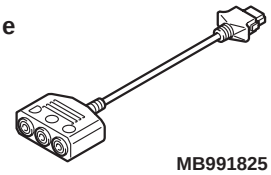 MB991825 f 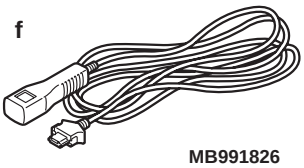 MB991826 MB991955	MB991955 a. MB991824 b. MB991827 c. MB991910 d. MB991911 e. MB991825 f. MB991826	M.U.T.-III sub-assembly a. Vehicle Communication Interface (V.C.I.) b. M.U.T.-III USB cable c. M.U.T.-III main harness A (Vehicles with CAN communication system) d. M.U.T.-III main harness B (Vehicles without CAN communication system) e. M.U.T.-III measure adapter f. M.U.T.-III trigger harness	⚠ CAUTION **For vehicles with CAN communication, use M.U.T.-III main harness A to send simulated vehicle speed. If you connect M.U.T.-III main harness B instead, the CAN communication does not function correctly.** Diagnosis code, service data and actuator test check.
a 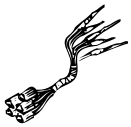 b 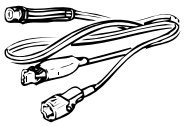 c 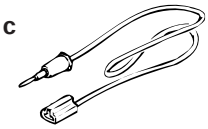 d DO NOT USE MB991223	MB991223 a. MB991219 b. MB991220 c. MB991221 d. MB991222	Harness set a. Check harness b. LED harness c. LED harness adapter d. Probe	Continuity check and voltage measurement at harness wire or connector a. For checking connector pin contact pressure b. For checking power supply circuit c. For checking power supply circuit d. For connecting a locally sourced tester

www.cargeek.ir

www.CarGeek.ir

Tool	Number	Name	Use
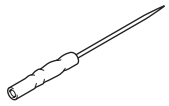 MB992006	MB992006	Extra fine probe	Continuity check and voltage measurement at harness wire or connector

TROUBLESHOOTING

STANDARD FLOW OF DIAGNOSTIC TROUBLESHOOTING

M1543101200145

Refer to GROUP 00 – Contents of troubleshooting .

DIAGNOSIS FUNCTION

M1543101300120

HOW TO READ DIAGNOSIS CODE

GROUP 00 – Diagnosis function .

HOW TO ERASE DIAGNOSIS CODE

GROUP 00 – Diagnosis function .

DIAGNOSIS CODE TABLE

M1543100300291

NOTE: The ETACS-ECU sets a diagnosis code.

Diagnosis code No.	Diagnostic item	Reference page
B2350	Lighting switch malfunction	
B2351	Wiper/washer switch malfunction	

DIAGNOSIS CODE PROCEDURES

Code No.B2350 Lighting switch malfunction
Code No.B2351 Wiper/washer switch malfunction

TROUBLE JUDGMENT

The ETACS-ECU receives the signals related to lighting and wiper/washer from the column switch. If the fail information data is included in the signal from column switch, the diagnosis code No. B2350 (lighting switch) or B2351 (wiper/washer switch) is stored.

COMMENTS ON TROUBLE SYMPTOM

The lighting switch, wiper/washer switch or the ETACS-ECU may have a problem.

PROBABLE CAUSES

- Malfunction of lighting switch (with built-in column-ECU)
- Malfunction of wiper/washer switch
- Malfunction of the ETACS-ECU

DIAGNOSIS PROCEDURE

STEP 1. Check whether the diagnosis code is reset.

Check again if the diagnosis code is set to the ETACS-ECU.

(1) Erase the diagnosis code.
(2) Turn the ignition switch from "LOCK" (OFF) position to "ON" position.
(3) Check if the diagnosis code No. B2350 or B2351 is set.

Q: Is the diagnosis code set?

Code No. B2351 is set. : Go to Step 2.
Code No. B2350 is set. : Go to Step 3.
No diagnosis code is set. : The trouble can be an intermittent malfunction (GROUP 00 – How to Cope with Intermittent Malfunction).

www.cargeek.ir

www.CarGeek.ir

STEP 2. Check whether the diagnosis code is reset.

Check again if the diagnosis code is set to the ETACS-ECU.

(1) Replace the wiper/washer switch.
(2) Erase the diagnosis code.
(3) Turn the ignition switch from "LOCK" (OFF) position to "ON" position.
(4) Check if diagnosis code is set.

Q: Is the diagnosis code set?
YES : Go to Step 3.
NO : The diagnosis is complete.

STEP 3. Check whether the diagnosis code is reset.

Check again if the diagnosis code is set to the ETACS-ECU.

(1) Replace the lighting switch (with built-in column-ECU).
(2) Erase the diagnosis code.
(3) Turn the ignition switch from "LOCK" (OFF) position to "ON" position.
(4) Check if diagnosis code is set.

Q: Is the diagnosis code set?
YES : Replace the ETACS-ECU.
NO : The diagnosis is complete.

REMOVAL AND INSTALLATION

M1543100700727

LIGHTING SWITCH AND WIPER/WASHER SWITCH

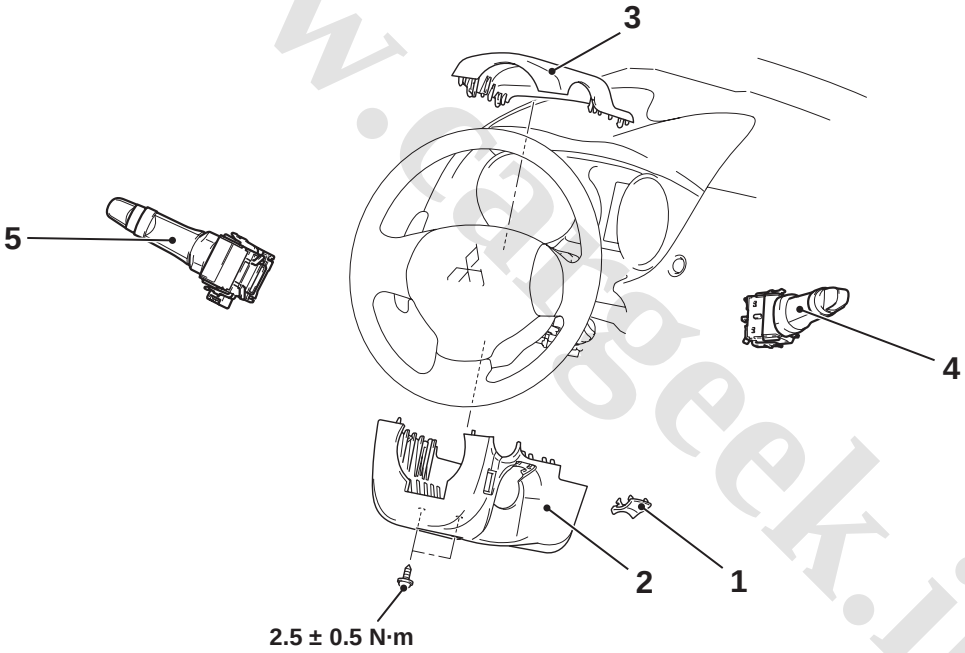

AC802153AD

Removal steps

1. Ignition key cover (Refer to GROUP 54A – Ignition switch).
2. Steering column cover lower, Steering column cover upper (Refer to GROUP 54A – Ignition switch).
3. Steering column upper cover (Refer to GROUP 54A – Ignition switch).

Removal steps (Continued)

4. Wiper/washer switch
5. Lighting switch (with built-in column-ECU)

www.cargeek.ir

www.CarGeek.ir

COLUMN SWITCH BODY

⚠ CAUTION

- **To remove the driver airbag module, refer to GROUP 52B – Service Precautions and Driver's Air Bag Module and Clock Spring .**
- **After the installation, perform a calibration for the ASC-ECU to learn the steering wheel sensor neutral point. (Refer to GROUP 35C, On-vehicle Service – Steering Wheel Sensor Calibration). <Vehicles with ASC or AFS>**

Pre-removal operation	Post-installation operation
• Check of steering wheel straight-ahead position • Removal of steering wheel assembly (Refer to GROUP 52B - Driver's Air Bag Module and Clock Spring .) • Removal of ignition key cover, steering column lower cover, steering column upper cover (Refer to GROUP 54A – Ignition switch) • Removal of Clock spring (Refer to GROUP 52B - Driver's Air Bag Module and Clock Spring).	• Installation of Clock spring (Refer to GROUP 52B - Driver's Air Bag Module and Clock Spring). • Installation of steering column lower cover, steering column upper cover (Refer to GROUP 54A – Ignition switch) • Installation of steering wheel assembly (Refer to GROUP 52B - Driver's Air Bag Module and Clock Spring .) • Check of steering wheel straight-ahead position

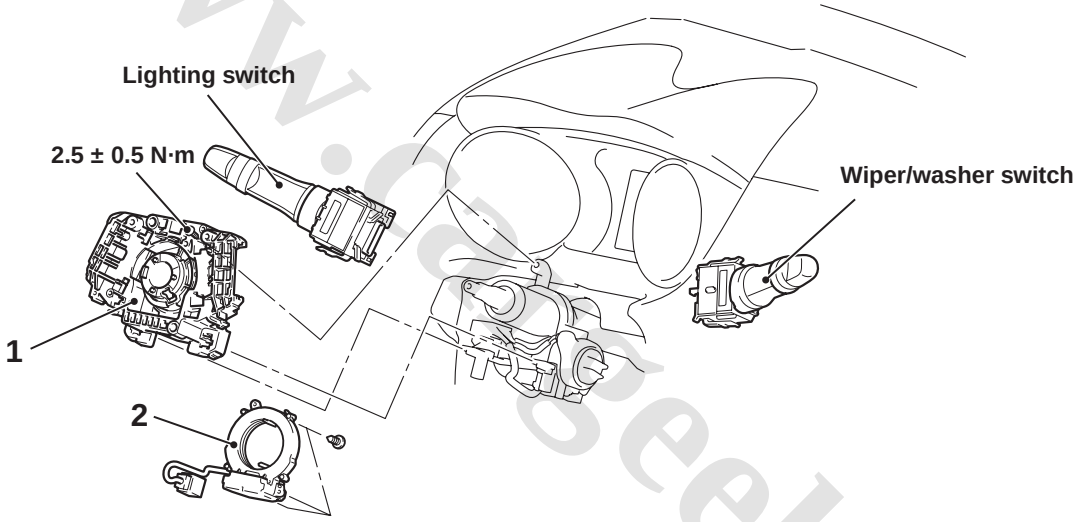

AC605523AB

Removal Steps

1. Column switch body
2. Steering wheel sensor (Refer to GROUP 35C - Steering wheel sensor). <Vehicles with ASC or AFS>

www.cargeek.ir

www.CarGeek.ir

INSPECTION

WIPER/WASHER SWITCH CONTINUITY CHECK

M1543101700225

<VEHICLES WITHOUT LIGHTING CONTROL SENSOR>

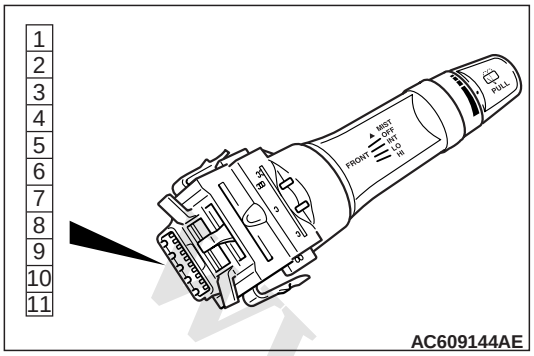

Switch position		Tester connection	Specified condition
OFF		–	Open circuit
Windshield intermittent wiper interval adjusting knob		6 – 3	Operating the adjusting knob changes the resistance.
Windshield washer switch		6 – 7	Continuity exists (2 Ω or less)
Windshield wiper switch	Hi	6 – 8	Continuity exists (2 Ω or less)
	Lo	6 – 9	Continuity exists (2 Ω or less)
	Int	6 – 10	Continuity exists (2 Ω or less)
	Mist	6 – 11	Continuity exists (2 Ω or less)

<VEHICLES WITH LIGHTING CONTROL SENSOR>

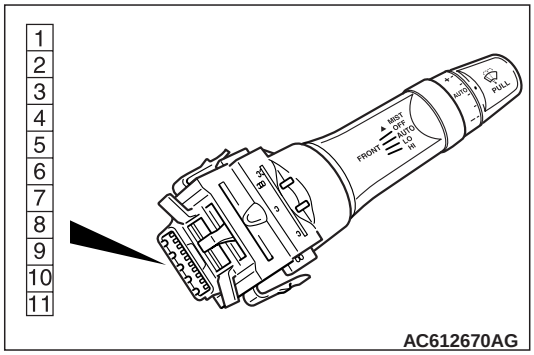

Switch position		Tester connection	Specified condition
OFF		–	Open circuit
Windshield rain sensitive wiper function adjusting knob		6 – 3	Operating the adjusting knob changes the resistance.
Windshield washer switch		6 – 7	Continuity exists (2 Ω or less)
Windshield wiper switch	Hi	6 – 8	Continuity exists (2 Ω or less)
	Lo	6 – 9	Continuity exists (2 Ω or less)
	Auto	6 – 10	Continuity exists (2 Ω or less)
	Mist	6 – 11	Continuity exists (2 Ω or less)

WIPER/WASHER SWITCH CONTINUITY CHECK

M1543101700214

<VEHICLES WITHOUT LIGHTING CONTROL SENSOR>

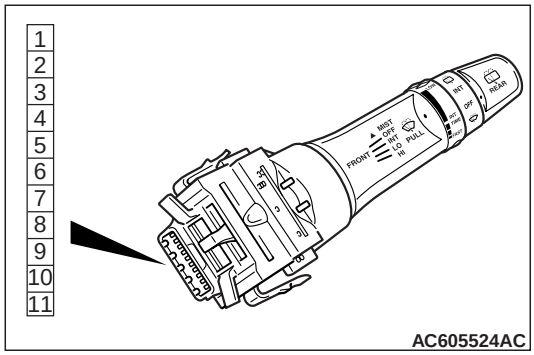

www.cargeek.ir

www.CarGeek.ir

Switch position		Tester connection	Normal condition
OFF		–	Open circuit
Windshield intermittent wiper interval adjusting knob		6 – 3	Operating the adjusting knob changes the resistance.
Rear wiper switch		6 – 4	Continuity exists (2 Ω or less)
Rear washer switch		6 – 5	Continuity exists (2 Ω or less)
Windshield washer switch		6 – 7	Continuity exists (2 Ω or less)
Windshield wiper switch	Hi	6 – 8	Continuity exists (2 Ω or less)
	Lo	6 – 9	Continuity exists (2 Ω or less)
	Int	6 – 10	Continuity exists (2 Ω or less)
	Mist	6 – 11	Continuity exists (2 Ω or less)

<VEHICLES WITH LIGHTING CONTROL SENSOR>

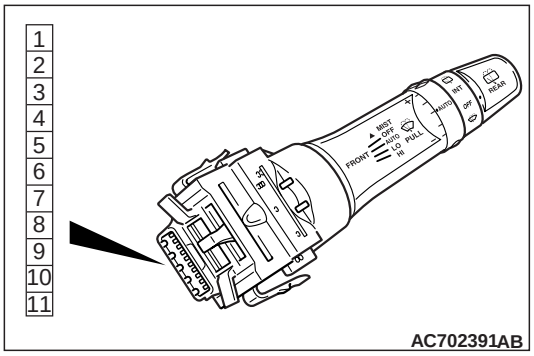

Switch position	Tester connection	Normal condition
OFF	–	Open circuit
Windshield rain sensitive wiper function adjusting knob	6 – 3	Operating the adjusting knob changes the resistance.
Rear wiper switch	6 – 4	Continuity exists (2 Ω or less)

Switch position		Tester connection	Normal condition
Rear washer switch		6 – 5	Continuity exists (2 Ω or less)
Windshield washer switch		6 – 7	Continuity exists (2 Ω or less)
Windshield wiper switch	Hi	6 – 8	Continuity exists (2 Ω or less)
	Lo	6 – 9	Continuity exists (2 Ω or less)
	Auto	6 – 10	Continuity exists (2 Ω or less)
	Mist	6 – 11	Continuity exists (2 Ω or less)

COLUMN SWITCH (SWITCH BODY PART) CONTINUITY CHECK

M1543101000334

1. Remove the lighting switch and wiper/washer switch.
2. Check that the continuity is present for the same terminal numbers (No. 3–11) of the column switch body connectors that remain on the steering column.

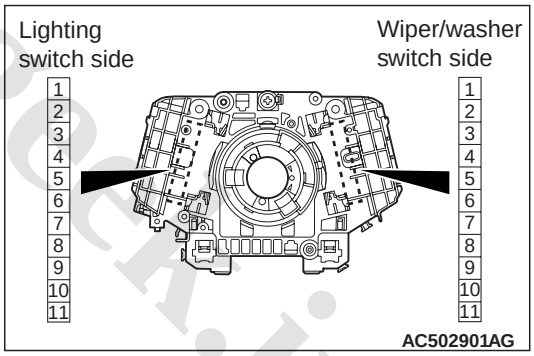

Column switch body	Terminal number	Normal condition
Lighting switch side connector Wiper/washer switch side connector	3 – 3 4 – 4 5 – 5 6 – 6 7 – 7 8 – 8 9 – 9 10 – 10 11 – 11	Continuity exists (2 Ω or less)

www.cargeek.ir

www.CarGeek.ir

RADIO AND CD PLAYER

SPECIAL TOOLS

M1542000602704

www.cargeek.ir

www.cargeek.ir

www.CarGeek.ir

Tool	Number	Name	Use
a 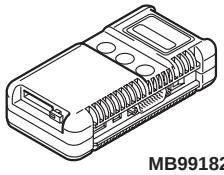 MB991824 b 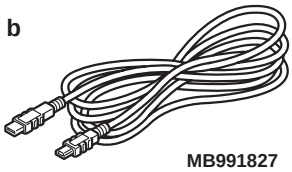 MB991827 c 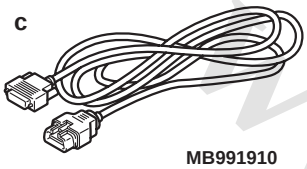 MB991910 d 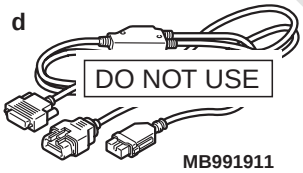 DO NOT USE MB991911 e 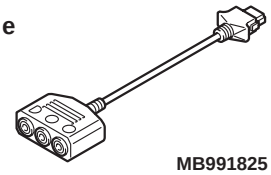 MB991825 f 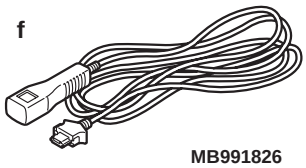 MB991826 MB991955	MB991955 a. MB991824 b. MB991827 c. MB991910 d. MB991911 e. MB991825 f. MB991826	M.U.T.-III sub-assembly a. Vehicle Communication Interface (V.C.I.) b. M.U.T.-III USB cable c. M.U.T.-III main harness A (Vehicles with CAN communication system) d. M.U.T.-III main harness B (Vehicles without CAN communication system) e. M.U.T.-III measure adapter f. M.U.T.-III trigger harness	⚠ CAUTION **For vehicles with CAN communication, use M.U.T.-III main harness A to send simulated vehicle speed. If you connect M.U.T.-III main harness B instead, the CAN communication does not function correctly.** Diagnosis code and service data check.
a 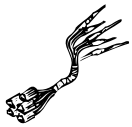 b 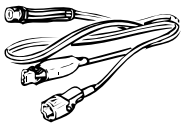 c 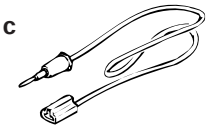 d DO NOT USE MB991223	MB991223 a. MB991219 b. MB991220 c. MB991221 d. MB991222	Harness set a. Check harness b. LED harness c. LED harness adapter d. Probe	Continuity check and voltage measurement at harness wire or connector a. For checking connector pin contact pressure b. For checking power supply circuit c. For checking power supply circuit d. For connecting a locally sourced tester

www.cargeek.ir

www.CarGeek.ir

Tool	Number	Name	Use
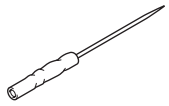 MB992006	MB992006	Extra fine probe	Continuity check and voltage measurement at harness wire or connector

TROUBLESHOOTING

AUDIO ERROR CODES

M1544018900238

If the radio and CD player detects any malfunction in itself or the inserted CD, the error codes below will be shown on the display.

Error code	Cause	Cause of trouble and its solution
ERROR	Power supply error	This error code will be shown if there is any problem in the power supply system of the radio and CD player. Check the connectors and wiring harness of the power supply system, and check that the battery voltage is normal. Check that the same error does not appear.
ERROR 01	Focus error	These error codes will be shown if there is any problem with the CD or there is excessive vibration on the vehicle. If the error codes are not displayed when the vehicle is stopped and another CD is inserted, there is a problem with the CD. Check if there is any of the following problems with the CD. • Contamination, scratch, or deformation • Formation of moisture or grease Repair the CD and insert it again. Then, check that no error appears.
ERROR 02	Abnormal disc	
ERROR 03	Mechanical error	This error codes will be shown if there is any internal mechanical or electrical problem in the radio and CD player. Replace the radio and CD player check that no error codes are shown.
ERROR HOT	Protection against high temperature	If the internal temperature is extremely high, this error code will be shown. Turn off the radio and CD player and wait until they cool down. Wait for a while, and then turn on the unit again. Check that the same error does not appear.
ERROR DC	Detection abnormal output to the speaker	This error code will be shown if the radio and CD player or the audio amplifier has an internal error or is contaminated with the foreign material, and there is a problem with output to the speaker. If it is contaminated with the foreign material, turn OFF the power. Dry the foreign material if it is liquid, and remove it if it is solid. Then, check if the error code is displayed. If the error code is displayed, replace the radio and CD player or the audio amplifier.
i NO SONG	No playable music file is found.	No playable music file is stored in the iPod. Store music files to the iPod.
i VER ERROR	iPod cannot be recognised	iPod itself or software is not supported. Use the supported iPod.

www.cargeek.ir

www.CarGeek.ir

Error code	Cause	Cause of trouble and its solution
i CONNECT i RETRY	iPod cannot be authenticated.	iPod is not authenticated. Reconnect. If the error code is not erased after that, the USB box communication may have a problem. Carry out the troubleshooting of "The USB adapter data cannot be replayed". (Refer to <Vehicles without Auto Stop & Go (AS&G) System> or <Vehicles with Auto Stop & Go (AS&G) System>.)
U NO SONG	No playable music file is found.	No playable music file is stored in the USB memory. Store music files to the USB memory.
U FILE ERROR	Playback of unplayable file (copyright protected file, etc.) is attempted.	Displayed when the playback of unplayable file such as a copyright protected file is attempted. The error code is displayed approximately for 3 seconds, and then a next playable file is played automatically.
UNSUPPORTED DEVICE	Unsupported device	The USB memory is not supported by the USB box. Use the supported USB memory.
UNSUPPORTED FORMAT	Unsupported format	
USB BUS PWR	Overcurrent abnormality	There is a communication error with the USB box. Carry out the troubleshooting of "The USB adapter data cannot be replayed". (Refer to <Vehicles without Auto Stop & Go (AS&G) System> or <Vehicles with Auto Stop & Go (AS&G) System>.)
U CONNECT U RETRY	USB memory cannot be authenticated.	The USB memory is not authenticated. Reconnect. If the error code is not erased after that, the USB box communication may have a problem. Carry out the troubleshooting of "The USB adapter data cannot be replayed". (Refer to <Vehicles without Auto Stop & Go (AS&G) System> or <Vehicles with Auto Stop & Go (AS&G) System>.)
U LSI ERROR	USB box internal error	This error code will be shown when there is a problem in the USB box. Replace the USB box.

STANDARD FLOW OF DIAGNOSTIC TROUBLESHOOTING

M1544004800528

Refer to GROUP 00 – Contents of troubleshooting .

DIAGNOSIS FUNCTION

M1544013200267

HOW TO READ DIAGNOSIS CODE

GROUP 00 – Diagnosis function .

HOW TO ERASE DIAGNOSIS CODE

GROUP 00 – Diagnosis function .

CHECK OF FREEZE FRAME DATA

The freeze frame data can be checked by using M.U.T.-III.

When detecting fault and storing the diagnosis code, the ECU connected to CAN bus line obtains the data before the determination of the diagnosis code and the data when the diagnosis code is determined, and then stores the ECU status of that time. By analysing each data from M.U.T.-III, the troubleshooting can be performed more efficiently. The displayed items are as the table below.

www.cargeek.ir

www.CarGeek.ir

Display item list

Item No.	Item name	Data item	Unit
1	Odometer	Total driving distance after the diagnosis code is generated	km
2	Ignition cycle	Number of times the ignition switch is turned "ON" or "LOCK (OFF)" after the past failure transition	Number of counts is displayed.
4	Accumulated minute	Cumulative time for current malfunction of diagnosis code	min

DIAGNOSIS CODE CHART

M1544012900478

⚠ CAUTION

On troubleshooting, if the ignition switch is turned ON while disconnecting connector(s), diagnosis code(s) associated with other system may be set. On completion, confirm all systems for diagnosis code(s). If diagnosis code(s) are set, erase them all.

Diagnosis code No.	Diagnostic item	Reference page
U0019	Bus off (CAN-B)	
U0141	ETACS-ECU CAN timeout	
U0151	SRS-ABG CAN timeout	
U0155	Meter CAN timeout	
U0164	A/C-ECU CAN timeout	
U0168	WCM/KOS CAN timeout	
U1415	Coding not completed/Data fail	
B2420	Power integrated circuit	
B2421	Radio tuner	
B2423	6-disc CD player error	
B2424	CD player error	
B2450	Switch panel communication	
B2451	Audio panel type error	

DIAGNOSIS CODE PROCEDURES

Code No.U0019 Bus off (CAN-B)

⚠ CAUTION

- **If there is any problem in the CAN bus lines, an incorrect diagnosis code may be set. Prior to this diagnosis, always diagnose the CAN bus lines.**
- **Before replacing the radio and CD player, be sure to check that the power supply circuit, earth circuit, and communication circuit are normal.**

TROUBLE JUDGMENT

When the radio and CD player is returned from the bus off state, or when the bus error is indicated to the radio and CD player state, the diagnosis code U0019 (CAN-B) is set.

www.cargeek.ir

www.CarGeek.ir

COMMENTS ON TROUBLE SYMPTOM
The radio and CD player, power supply for the radio and CD player, earth circuit, or CAN bus line may have a problem.

PROBABLE CAUSES
- Malfunctions of radio and CD player
- Malfunction of CAN bus line wiring harness and connector

DIAGNOSIS PROCEDURE

STEP 1. M.U.T.-III CAN bus diagnostics
Use the M.U.T.-III to diagnose the CAN bus lines.

Q: Is the check result normal?
YES : Go to Step 2.
NO : Repair the CAN bus line (Refer to GROUP 54C – Troubleshooting).

STEP 2. Check whether the M.U.T.-III can communicate with the radio and CD player.

Q: Is the check result normal?
YES : Erase the diagnosis code. This diagnosis is complete.
NO : Check the power supply circuit of the radio and CD player, and repair if necessary.

Code No.U0141 ETACS-ECU CAN timeout

⚠ CAUTION
- **If the diagnosis code No. U0141 is set, be sure to diagnose the CAN bus line.**
- **When replacing the radio and CD player, always check that the communication circuit is normal.**

DIAGNOSTIC FUNCTION
If the signal from ETACS-ECU cannot be received, the radio and CD player sets the diagnosis code No. U0141.

JUDGMENT CRITERIA
With the statuses that the ignition switch is at ON position, system voltage is 10 – 16 V (data from ETACS-ECU), and there is no malfunction to the power supply fuse (IOD fuse), or odometer value is 80.5 km or more, if the communication with ETACS-ECU cannot be established for 2,500 ms or more, the radio and CD player determines that a problem has occurred.

PROBABLE CAUSES
- Malfunction of CAN bus line
- Malfunction of radio and CD player
- Malfunction of the ETACS-ECU

DIAGNOSIS PROCEDURE

STEP 1. M.U.T.-III CAN bus diagnostics
Use the M.U.T.-III to diagnose the CAN bus lines.

Q: Is the check result normal?
YES : Go to Step 2.
NO : Repair the CAN bus line (Refer to GROUP 54C – Troubleshooting).

STEP 2. M.U.T.-III other system diagnosis code
Check again if the diagnosis code is set to the ETACS-ECU.

Q: Is the diagnosis code set?
YES : Diagnose the ETACS-ECU (Refer to GROUP 54A – ETACS-ECU – Troubleshooting).
NO : Go to Step 3.

STEP 3. Check the M.U.T.-III Diagnosis code for other systems
Check if the diagnosis code No. U0141 is set to combination meter.

Q: Is the diagnosis code set?
YES : Go to Step 4.
NO : Go to Step 5.

STEP 4. Diagnosis code recheck
Check again if the diagnosis code is set to the radio and CD player.
(1) Erase the diagnosis code.
(2) Turn the ignition switch from the LOCK (OFF) position to the ON position.
(3) Check if the diagnosis code is set.

Q: Is the diagnosis code set?

www.cargeek.ir

YES : Replace the ETACS-ECU.
NO : A poor connection, open circuit or other intermittent malfunction in the CAN bus line between the radio and CD player and the ETACS-ECU. (Refer to GROUP 00 – How to Use Troubleshooting/Inspection Service Points - How to Cope with Intermittent Malfunction .)

STEP 5. Check whether the diagnosis code is reset.
Check again if the diagnosis code is set to the radio and CD player.
(1) Erase the diagnosis code.
(2) Turn the ignition switch from "LOCK" (OFF) position to "ON" position.
(3) Check if diagnosis code is set.

Q: Is the diagnosis code set?
YES : Replace the radio and CD player.
NO : A poor connection, open circuit or other intermittent malfunction in the CAN bus line between the radio and CD player and the ETACS-ECU. (Refer to GROUP 00 – How to Use Troubleshooting/Inspection Service Points - How to Cope with Intermittent Malfunction .)

Code No.U0151 SRS-ABG CAN timeout

⚠ CAUTION
- **If the diagnosis code No. U0151 is set, be sure to diagnose the CAN bus line.**
- **When replacing the radio and CD player, always check that the communication circuit is normal.**

DIAGNOSTIC FUNCTION
If the signal from SRS-ECU cannot be received, the radio and CD player sets the diagnosis code No. U0151.

JUDGMENT CRITERIA
With the statuses that the ignition switch is at ON position, system voltage is 10–16 V (data from ETACS-ECU), and there is no malfunction to the power supply fuse (IOD fuse), or odometer value is 80.5 km or more, if the communication with SRS-ECU cannot be established for 2,500 ms or more, the radio and CD player determines that a problem has occurred.

PROBABLE CAUSES
- Malfunction of CAN bus line
- Malfunction of the SRS-ECU
- Malfunction of radio and CD player

DIAGNOSIS PROCEDURE

STEP 1. M.U.T.-III CAN bus diagnostics
Use the M.U.T.-III to diagnose the CAN bus lines.

Q: Is the check result normal?
YES : Go to Step 2.
NO : Repair the CAN bus line (Refer to GROUP 54C – Troubleshooting).

STEP 2. M.U.T.-III other system diagnosis code
Check again if the diagnosis code is set to the SRS-ECU.

Q: Is the diagnosis code set?
YES : Troubleshoot the SRS-ECU (Refer to GROUP 52B – Troubleshooting).
NO : Go to Step 3.

STEP 3. Check the M.U.T.-III Diagnosis code for other systems
Check if the diagnosis code No. U0151 is set to combination meter.

Q: Is the diagnosis code set?
YES : Go to Step 4.
NO : Go to Step 5.

STEP 4. Diagnosis code recheck
Check again if the diagnosis code is set to the radio and CD player.
(1) Erase the diagnosis code.
(2) Turn the ignition switch from the LOCK (OFF) position to the ON position.
(3) Check if the diagnosis code is set.

Q: Is the diagnosis code set?
YES : Replace the SRS-ECU.
NO : A poor connection, open circuit or other intermittent malfunction in the CAN bus line between the radio and CD player and the SRS-ECU. (Refer to GROUP 00 – How to Use Troubleshooting/Inspection Service Points - How to Cope with Intermittent Malfunction .)

www.cargeek.ir

www.CarGeek.ir

STEP 5. Check whether the diagnosis code is reset.
Check again if the diagnosis code is set to the radio and CD player.
(1) Erase the diagnosis code.
(2) Turn the ignition switch from "LOCK" (OFF) position to "ON" position.
(3) Check if diagnosis code is set.

Q: Is the diagnosis code set?
YES : Replace the radio and CD player.
NO : A poor connection, open circuit or other intermittent malfunction in the CAN bus line between the radio and CD player and the SRS-ECU. (Refer to GROUP 00 – How to Use Troubleshooting/Inspection Service Points - How to Cope with Intermittent Malfunction .)

Code No.U0155 Meter CAN timeout

⚠ CAUTION
- **If the diagnosis code No. U0155 is set, be sure to diagnose the CAN bus line.**
- **When replacing the radio and CD player, always check that the communication circuit is normal.**

DIAGNOSTIC FUNCTION
If the signal from combination meter cannot be received, the radio and CD player sets the diagnosis code No. U0155.

JUDGMENT CRITERIA
With the statuses that the ignition switch is at ON position, system voltage is 10–16 V (data from ETACS-ECU), and there is no malfunction to the power supply fuse (IOD fuse), or odometer value is 80.5 km or more, if the communication with combination meter cannot be established for 2,500 ms or more, the radio and CD player determines that a problem has occurred.

PROBABLE CAUSES
- Malfunction of CAN bus line
- Malfunction of the combination meter
- Malfunction of radio and CD player

DIAGNOSIS PROCEDURE

STEP 1. M.U.T.-III CAN bus diagnostics
Use the M.U.T.-III to diagnose the CAN bus lines.

Q: Is the check result normal?
YES : Go to Step 2.
NO : Repair the CAN bus line (Refer to GROUP 54C – Troubleshooting).

STEP 2. M.U.T.-III other system diagnosis code
Check again if the diagnosis code is set to the combination meter.

Q: Is the diagnosis code set?
YES : Troubleshoot the combination meter (Refer to).
NO : Go to Step 3.

STEP 3. Check the M.U.T.-III Diagnosis code for other systems
Check if the diagnosis code No. U0155 is set to ETACS-ECU.

Q: Is the diagnosis code set?
YES : Go to Step 4.
NO : Go to Step 5.

STEP 4. Diagnosis code recheck
Check again if the diagnosis code is set to the radio and CD player.
(1) Erase the diagnosis code.
(2) Turn the ignition switch from the LOCK (OFF) position to the ON position.
(3) Check if the diagnosis code is set.

Q: Is the diagnosis code set?
YES : Replace the combination meter.
NO : A poor connection, open circuit or other intermittent malfunction in the CAN bus line between the radio and CD player and the combination meter. (Refer to GROUP 00 – How to Use Troubleshooting/Inspection Service Points - How to Cope with Intermittent Malfunction .)

STEP 5. Check whether the diagnosis code is reset.
Check again if the diagnosis code is set to the radio and CD player.
(1) Erase the diagnosis code.
(2) Turn the ignition switch from "LOCK" (OFF) position to "ON" position.
(3) Check if diagnosis code is set.

Q: Is the diagnosis code set?

www.cargeek.ir

www.CarGeek.ir

YES : Replace the radio and CD player.
NO : A poor connection, open circuit or other intermittent malfunction in the CAN bus line between the radio and CD player and the combination meter. (Refer to GROUP 00 – How to Use Troubleshooting/Inspection Service Points - How to Cope with Intermittent Malfunction .)

Code No.U0164 A/C-ECU CAN timeout

⚠ CAUTION
- **If the diagnosis code No. U0164 is set, be sure to diagnose the CAN bus line.**
- **When replacing the radio and CD player, always check that the communication circuit is normal.**

DIAGNOSTIC FUNCTION
If the signal from A/C-ECU <vehicle with A/C> or heater control unit <vehicle without A/C> cannot be received, the radio and CD player sets the diagnosis code No. U0164.

JUDGEMENT CRITERIA
With the statuses that the ignition switch is at ON position, system voltage is 10–16 V (data from ETACS-ECU), and there is no malfunction to the power supply fuse (IOD fuse), or odometer value is 80.5 km or more, if the communication with A/C-ECU <vehicle with A/C> or heater control unit <vehicle without A/C> cannot be established for 2,500 ms or more, the radio and CD player determines that a problem has occurred.

PROBABLE CAUSES
- Malfunction of CAN bus line
- Malfunction of the A/C-ECU <vehicle with A/C> or heater control unit <vehicle without A/C>
- Malfunction of radio and CD player

DIAGNOSIS PROCEDURE

STEP 1. M.U.T.-III CAN bus diagnostics
Use the M.U.T.-III to diagnose the CAN bus lines.

Q: Is the check result normal?
YES : Go to Step 2.
NO : Repair the CAN bus line (Refer to GROUP 54C – Troubleshooting).

STEP 2. M.U.T.-III other system diagnosis code
Check if diagnosis code is set to the A/C-ECU <vehicle with A/C> or heater control unit <vehicle without A/C>.

Q: Is the diagnosis code set?
YES : Troubleshoot the A/C-ECU <vehicle with A/C> or heater control unit <vehicle without A/C> (Refer to GROUP 55A – Troubleshooting).
NO : Go to Step 3.

STEP 3. Check the M.U.T.-III Diagnosis code for other systems
Check if the diagnosis code No. U0164 is set to ETACS-ECU.

Q: Is the diagnosis code set?
YES : Go to Step 4.
NO : Go to Step 5.

STEP 4. Diagnosis code recheck
Check again if the diagnosis code is set to the radio and CD player.
(1) Erase the diagnosis code.
(2) Turn the ignition switch from the LOCK (OFF) position to the ON position.
(3) Check if the diagnosis code is set.

Q: Is the diagnosis code set?
YES : Replace the A/C-ECU <vehicle with A/C> or heater control unit <vehicle without A/C>.
NO : A poor connection, open circuit or other intermittent malfunction in the CAN bus line between the radio and CD player and the A/C-ECU <vehicle with A/C> or heater control unit <vehicle without A/C>. (Refer to GROUP 00 – How to Use Troubleshooting/Inspection Service Points - How to Cope with Intermittent Malfunction .)

www.cargeek.ir

www.CarGeek.ir

STEP 5. Check whether the diagnosis code is reset.
Check again if the diagnosis code is set to the radio and CD player.
(1) Erase the diagnosis code.
(2) Turn the ignition switch from "LOCK" (OFF) position to "ON" position.
(3) Check if diagnosis code is set.

Q: Is the diagnosis code set?
YES : Replace the radio and CD player.
NO : A poor connection, open circuit or other intermittent malfunction in the CAN bus line between the radio and CD player and the A/C-ECU <vehicle with A/C> or heater control unit <vehicle without A/C>. (Refer to GROUP 00 – How to Use Troubleshooting/ Inspection Service Points - How to Cope with Intermittent Malfunction .)

Code No.U0168 WCM/KOS CAN timeout

⚠ CAUTION
- **If diagnosis code No. U0168 is set, be sure to diagnose the CAN bus line.**
- **When replacing the radio and CD player, always check that the communication circuit is normal.**

DIAGNOSTIC FUNCTION
If the signal from WCM or KOS-ECU cannot be received, the radio and CD player sets the diagnosis code No. U0168.

JUDGMENT CRITERIA
With the statuses that the ignition switch is at ON position, system voltage is 10 – 16 V (data from ETACS-ECU), and there is no malfunction to the power supply fuse (IOD fuse), or odometer value is 80.5 km or more, if the communication with WCM or KOS-ECU cannot be established for 2,500 ms or more, the radio and CD player determines that a problem has occurred.

PROBABLE CAUSES
- Malfunction of CAN bus line
- Malfunction of the WCM <Vehicles with WCM>
- Malfunction of the KOS <Vehicles with KOS-ECU>
- Malfunction of radio and CD player

DIAGNOSIS PROCEDURE

STEP 1. M.U.T.-III CAN bus diagnostics
Use the M.U.T.-III to diagnose the CAN bus lines.

Q: Is the check result normal?
YES : Go to Step 2.
NO : Repair the CAN bus line (Refer to GROUP 54C – Troubleshooting).

STEP 2. M.U.T.-III other system diagnosis code
Check again if the diagnosis code is set to the WCM or KOS-ECU.

Q: Is the diagnosis code set?
YES : Troubleshoot the WCM or KOS-ECU (Refer to GROUP 42C – Diagnosis Code Chart <Vehicles with WCM> or GROUP 42B – Diagnosis Code Chart <Vehicles with KOS>).
NO : Go to Step 3.

STEP 3. Check the M.U.T.-III Diagnosis code for other systems
Check if the diagnosis code No. U0168 is set to combination meter.

Q: Is the diagnosis code set?
YES : Go to Step 4.
NO : Go to Step 5.

STEP 4. Diagnosis code recheck
Check again if the diagnosis code is set to the radio and CD player.
(1) Erase the diagnosis code.
(2) Turn the ignition switch from the LOCK (OFF) position to the ON position.
(3) Check if the diagnosis code is set.

Q: Is the diagnosis code set?
YES : Replace the WCM <Vehicles with WCM> or KOS <Vehicles with KOS-ECU>.
NO : A poor connection, open circuit or other intermittent malfunction in the CAN bus line between the radio and CD player and the WCM <Vehicles with WCM> or KOS <Vehicles with KOS-ECU>. (Refer to GROUP 00 – How to Use Troubleshooting/ Inspection Service Points - How to Cope with Intermittent Malfunction .)

www.cargeek.ir

www.CarGeek.ir

STEP 5. Check whether the diagnosis code is reset.
Check again if the diagnosis code is set to the radio and CD player.
(1) Erase the diagnosis code.
(2) Turn the ignition switch from "LOCK" (OFF) position to "ON" position.
(3) Check if diagnosis code is set.

Q: Is the diagnosis code set?

YES : Replace the radio and CD player.
NO : A poor connection, open circuit or other intermittent malfunction in the CAN bus line between the radio and CD player and the WCM <Vehicles with WCM> or KOS <Vehicles with KOS-ECU>. (Refer to GROUP 00 – How to Use Troubleshooting/ Inspection Service Points - How to Cope with Intermittent Malfunction .)

Code No.U1415 Coding not completed/Data fail

⚠ CAUTION
- **If there is any problem in the CAN bus lines, an incorrect diagnosis code may be set. Prior to this diagnosis, always diagnose the CAN bus lines.**
- **Before replacing the radio and CD player, be sure to check that the power supply circuit, earth circuit, and communication circuit are normal.**

TROUBLE JUDGMENT
When the vehicle information data is not registered to the radio and CD player sets the diagnosis code No.U1415.

COMMENTS ON TROUBLE SYMPTOM
The radio and CD player, ETACS-ECU, or CAN bus line may have a problem.

PROBABLE CAUSES
- Malfunctions of radio and CD player
- Malfunction of the ETACS-ECU
- Malfunction of CAN bus line wiring harness and connector

DIAGNOSIS PROCEDURE

STEP 1. M.U.T.-III CAN bus diagnostics
Use the M.U.T.-III to diagnose the CAN bus lines.

Q: Is the check result normal?

YES : Go to Step 2.
NO : Repair the CAN bus line (Refer to GROUP 54C, Troubleshooting).

STEP 2. M.U.T.-III other system diagnosis code
Check if diagnosis code is set to the ETACS-ECU.

Q: Is the diagnosis code set?
YES : Diagnose the ETACS-ECU (Refer to ETACS – Troubleshooting).
NO : Go to Step 3.

STEP 3. Check whether the diagnosis code is reset.
Check again if the diagnosis code is set to the radio and CD player.
(1) Erase the diagnosis code.
(2) Turn the ignition switch from "LOCK" (OFF) position to "ON" position.
(3) Check if diagnosis code is set.

Q: Is the diagnosis code set?
YES : Replace the radio and CD player.
NO : The trouble can be an intermittent malfunction (Refer to GROUP 00 – How to use Troubleshooting/inspection Service Points – How to Cope with Intermittent Malfunction).

www.cargeek.ir

www.CarGeek.ir

Code No.B2420 Power integrated circuit

⚠ CAUTION
- **If there is any problem in the CAN bus lines, an incorrect diagnosis code may be set. Prior to this diagnosis, always diagnose the CAN bus lines.**
- **Before replacing the radio and CD player, be sure to check that the power supply circuit, earth circuit, and communication circuit are normal.**

TROUBLE JUDGMENT
If the radio and CD player continuously apply the voltage of 2 V or more to the speakers for 1 minute or more, it is determined that the offset voltage is exceeded, and then the diagnosis code is set.

COMMENTS ON TROUBLE SYMPTOM
The radio and CD player or CAN bus line may have a problem.

PROBABLE CAUSES
- Malfunctions of radio and CD player
- Malfunction of CAN bus line wiring harness and connector

DIAGNOSIS PROCEDURE

STEP 1. M.U.T.-III CAN bus diagnostics
Use the M.U.T.-III to diagnose the CAN bus lines.

Q: Is the check result normal?
YES : Go to Step 2.
NO : Repair the CAN bus line (Refer to GROUP 54C – Troubleshooting).

STEP 2. Check whether the diagnosis code is reset.
Check again if the diagnosis code is set to the radio and CD player.
(1) Erase the diagnosis code.
(2) Turn the ignition switch from "LOCK" (OFF) position to "ON" position.
(3) Check if diagnosis code is set.

Q: Is the diagnosis code set?
YES : Replace the radio and CD player.
NO : The trouble can be an intermittent malfunction (Refer to GROUP 00 – How to use Troubleshooting/inspection Service Points – How to Cope with Intermittent Malfunction).

Code No.B2421 Radio tuner

⚠ CAUTION
- **If there is any problem in the CAN bus lines, an incorrect diagnosis code may be set. Prior to this diagnosis, always diagnose the CAN bus lines.**
- **Before replacing the radio and CD player, be sure to check that the power supply circuit, earth circuit, and communication circuit are normal.**

TROUBLE JUDGMENT
If the communication cannot be established consecutively for 10 times between the incorporated tuner of radio and CD player and the microcomputer, the diagnosis code is set.

COMMENTS ON TROUBLE SYMPTOM
The radio and CD player or CAN bus line may have a problem.

PROBABLE CAUSES
- Malfunctions of radio and CD player
- Malfunction of CAN bus line wiring harness and connector

DIAGNOSIS PROCEDURE

STEP 1. M.U.T.-III CAN bus diagnostics
Use the M.U.T.-III to diagnose the CAN bus lines.

Q: Is the check result normal?
YES : Go to Step 2.
NO : Repair the CAN bus line (Refer to GROUP 54C – Troubleshooting).

STEP 2. Check whether the diagnosis code is reset.
Check again if the diagnosis code is set to the radio and CD player.
(1) Erase the diagnosis code.
(2) Turn the ignition switch from "LOCK" (OFF) position to "ON" position.
(3) Check if diagnosis code is set.

www.cargeek.ir

www.CarGeek.ir

Q: Is the diagnosis code set?

YES : Replace the radio and CD player.
NO : The trouble can be an intermittent malfunction (Refer to GROUP 00 – How to use Troubleshooting/inspection Service Points – How to Cope with Intermittent Malfunction).

Code No.B2423 6-disc CD player error

⚠ CAUTION

- **If there is any problem in the CAN bus lines, an incorrect diagnosis code may be set. Prior to this diagnosis, always diagnose the CAN bus lines.**
- **Before replacing the radio and CD player, be sure to check that the power supply circuit, earth circuit, and communication circuit are normal.**

TROUBLE JUDGEMENT

During the use of the 6-disc CD changer of radio and CD player, if any of the ERROR, ERROR01, ERROR02, ERROR03, ERROR DC or ERROR HOT continues for 1 minute, the diagnosis code is set.

COMMENTS ON TROUBLE SYMPTOM

The radio and CD player or CAN bus line may have a problem.

PROBABLE CAUSES

- Malfunctions of radio and CD player
- Malfunction of CAN bus line wiring harness and connector

DIAGNOSIS PROCEDURE

STEP 1. M.U.T.-III CAN bus diagnostics

Use the M.U.T.-III to diagnose the CAN bus lines.

Q: Is the check result normal?

YES : Go to Step 2.
NO : Repair the CAN bus line (Refer to GROUP 54C – Troubleshooting).

STEP 2. CD check

Playback a clean and unscratched CD for 1 minute, and recheck if the diagnosis code is set to the radio and CD player.

(1) Erase the diagnosis code.
(2) Turn the ignition switch from "LOCK" (OFF) position to "ON" position.
(3) Playback the clean, unscratched CD for 1 minute.
(4) Check if diagnosis code is set.

Q: Is the diagnosis code set?

YES : Go to Step 3.
NO : Clean the CD, use a CD without scratches and burrs, or remove the CD burrs, and then reinsert the CD.

STEP 3. Check whether the diagnosis code is reset.

Check again if the diagnosis code is set to the radio and CD player.

(1) Erase the diagnosis code.
(2) Turn the ignition switch from "LOCK" (OFF) position to "ON" position.
(3) Check if diagnosis code is set.

Q: Is the diagnosis code set?

YES : Replace the radio and CD player.
NO : The trouble can be an intermittent malfunction (Refer to GROUP 00 – How to use Troubleshooting/inspection Service Points – How to Cope with Intermittent Malfunction).

www.cargeek.ir

www.CarGeek.ir

Code No.B2424 CD player error

⚠ CAUTION
- **If there is any problem in the CAN bus lines, an incorrect diagnosis code may be set. Prior to this diagnosis, always diagnose the CAN bus lines.**
- **Before replacing the radio and CD player, be sure to check that the power supply circuit, earth circuit, and communication circuit are normal.**

TROUBLE JUDGMENT
During the use of the CD player of radio and CD player, if any of the ERROR, ERROR01, ERROR02, ERROR03, ERROR DC or ERROR HOT continues for 1 minute, the diagnosis code is set.

COMMENTS ON TROUBLE SYMPTOM
The radio and CD player or CAN bus line may have a problem.

PROBABLE CAUSES
- Malfunctions of radio and CD player
- Malfunction of CAN bus line wiring harness and connector

DIAGNOSIS PROCEDURE

STEP 1. M.U.T.-III CAN bus diagnostics
Use the M.U.T.-III to diagnose the CAN bus lines.

Q: Is the check result normal?
YES : Go to Step 2.
NO : Repair the CAN bus line (Refer to GROUP 54C – Troubleshooting).

STEP 2. CD check
Playback a clean and unscratched CD for 1 minute, and recheck if the diagnosis code is set to the radio and CD player.
(1) Erase the diagnosis code.
(2) Turn the ignition switch from "LOCK" (OFF) position to "ON" position.
(3) Playback the clean, unscratched CD for 1 minute.
(4) Check if diagnosis code is set.

Q: Is the diagnosis code set?
YES : Go to Step 3.
NO : Clean the CD, use a CD without scratches and burrs, or remove the CD burrs, and then reinsert the CD.

STEP 3. Check whether the diagnosis code is reset.
Check again if the diagnosis code is set to the radio and CD player.
(1) Erase the diagnosis code.
(2) Turn the ignition switch from "LOCK" (OFF) position to "ON" position.
(3) Check if diagnosis code is set.

Q: Is the diagnosis code set?
YES : Replace the radio and CD player.
NO : The trouble can be an intermittent malfunction (Refer to GROUP 00 – How to use Troubleshooting/inspection Service Points – How to Cope with Intermittent Malfunction).

Code No.B2450 Switch panel communication

⚠ CAUTION
- **If there is any problem in the CAN bus lines, an incorrect diagnosis code may be set. Prior to this diagnosis, always diagnose the CAN bus lines.**
- **Before replacing the radio and CD player, be sure to check that the power supply circuit, earth circuit, and communication circuit are normal.**

TROUBLE JUDGEMENT
If the radio and CD player cannot establish the communication with centre panel assembly for 1 minute or more, the diagnosis code is set.

COMMENTS ON TROUBLE SYMPTOM
The radio and CD player, centre panel assembly, or CAN bus line may have a problem.

PROBABLE CAUSES
- Malfunctions of radio and CD player
- Malfunction of centre panel assembly
- Malfunction of CAN bus line wiring harness and connector

www.cargeek.ir

www.CarGeek.ir

DIAGNOSIS PROCEDURE

STEP 1. M.U.T.-III CAN bus diagnostics
Use the M.U.T.-III to diagnose the CAN bus lines.

Q: Is the check result normal?
YES : Go to Step 2.
NO : Repair the CAN bus line (Refer to GROUP 54C – Troubleshooting).

STEP 2. Connection status check of radio and CD player with centre panel assembly
Check that the radio and CD player are connected to the centre panel assembly without any problem.

Q: Is the connection established?
YES : Go to Step 3.
NO : Securely connect the radio and CD player with the centre panel assembly.

STEP 3. Check whether the diagnosis code is reset.
Check again if the diagnosis code is set to the radio and CD player.
(1) Erase the diagnosis code.
(2) Turn the ignition switch from "LOCK" (OFF) position to "ON" position.
(3) Check if diagnosis code is set.

Q: Is the diagnosis code set?
YES : Replace the radio and CD player.
NO : The trouble can be an intermittent malfunction (Refer to GROUP 00 – How to use Troubleshooting/inspection Service Points – How to Cope with Intermittent Malfunction).

Code No.B2451 Audio panel type error

⚠ CAUTION
If there is any problem in the CAN bus lines, an incorrect diagnosis code may be set. Prior to this diagnosis, always diagnose the CAN bus lines.

TROUBLE JUDGMENT
If the radio and CD player consecutively receive the display trouble signal from the centre panel assembly for 1 minute, the diagnosis code is set.

COMMENTS ON TROUBLE SYMPTOM
The centre panel assembly or CAN bus line may have a problem.

PROBABLE CAUSES
- Malfunction of centre panel assembly
- Malfunction of radio and CD player
- Malfunction of CAN bus line wiring harness and connector

DIAGNOSIS PROCEDURE

STEP 1. M.U.T.-III CAN bus diagnostics
Use the M.U.T.-III to diagnose the CAN bus lines.

Q: Is the check result normal?
YES : Go to Step 2.
NO : Repair the CAN bus line (Refer to GROUP 54C – Troubleshooting).

STEP 2. Check whether the diagnosis code is reset.
Check again if the diagnosis code is set to the radio and CD player.
(1) Erase the diagnosis code.
(2) Turn the ignition switch from "LOCK" (OFF) position to "ON" position.
(3) Check if diagnosis code is set.

Q: Is the diagnosis code set?
YES : Go to Step 3.
NO : The trouble can be an intermittent malfunction (Refer to GROUP 00 – How to use Troubleshooting/inspection Service Points – How to Cope with Intermittent Malfunction).

STEP 3. Replace the centre panel assembly temporarily, and check whether the diagnosis code is set.
Check again if the diagnosis code is set to the radio and CD player.
(1) Erase the diagnosis code.
(2) Turn the ignition switch from "LOCK" (OFF) position to "ON" position.
(3) Check if diagnosis code is set.

Q: Is the diagnosis code set?
YES : Replace the radio and CD player.
NO : Replace the centre panel assembly.

www.cargeek.ir

www.CarGeek.ir

TROUBLE SYMPTOM CHART

M1544004902684

Trouble symptom		Inspection Procedure No.	Reference page
Power of the radio and CD player does not turn ON when the ignition switch is in the "ACC" position or "ON" position.	<Vehicles without Auto Stop & Go (AS&G) System>	1	
	<Vehicles with Auto Stop & Go (AS&G) System>		
No sound is heard.	<Vehicles without audio amplifier>	2	
	<Vehicles with audio amplifier>		
No sound is heard from one of the speakers.	<Vehicles without audio amplifier>	3	
	<Vehicles with audio amplifier>		
The radio and CD player does not operate normally by operating the audio control unit of the centre panel unit.	<Vehicles without Auto Stop & Go (AS&G) System>	4	
	<Vehicles with Auto Stop & Go (AS&G) System>		
Audio illumination does not work normally.		5	
The sound of audio adapter’s input are not played.		6	
Troubleshooting for Noise.		7	
The sound volume decreases temporarily. The sound disappears at auto start by Auto Stop & Go (AS&G) System. <Vehicles with audio amplifier>		8	

NOTE:

- *If the radio and CD player is reset or sound jump occurs at the auto restart by Auto Stop & Go (AS&G) System, carry out the DC/DC converter troubleshooting of "Audio equipment reset or sound jump occurs at auto start".(Refer to .)<Vehicles with Auto Stop & Go (AS&G) System>*
- *For the troubleshooting of the USB box, refer to .<Vehicles with USB box>*
- *For the troubleshooting of the hands free ECU, refer to .<Vehicles with hands free ECU>*
- *For the troubleshooting of the steering wheel audio remote control switch, refer to .<Vehicles with steering wheel audio remote control switch>*

www.cargeek.ir

www.CarGeek.ir

SYMPTOM PROCEDURES

Inspection Procedure 1: Power of the radio and CD player does not turn ON when the ignition switch is in the "ACC" position or "ON" position. <Vehicles without Auto Stop & Go (AS&G) System>

⚠ CAUTION

Before replacing the radio and CD player, ensure that the power supply circuit, the earth circuit and the communication circuit are normal.

Radio and CD Player Power Source Circuit

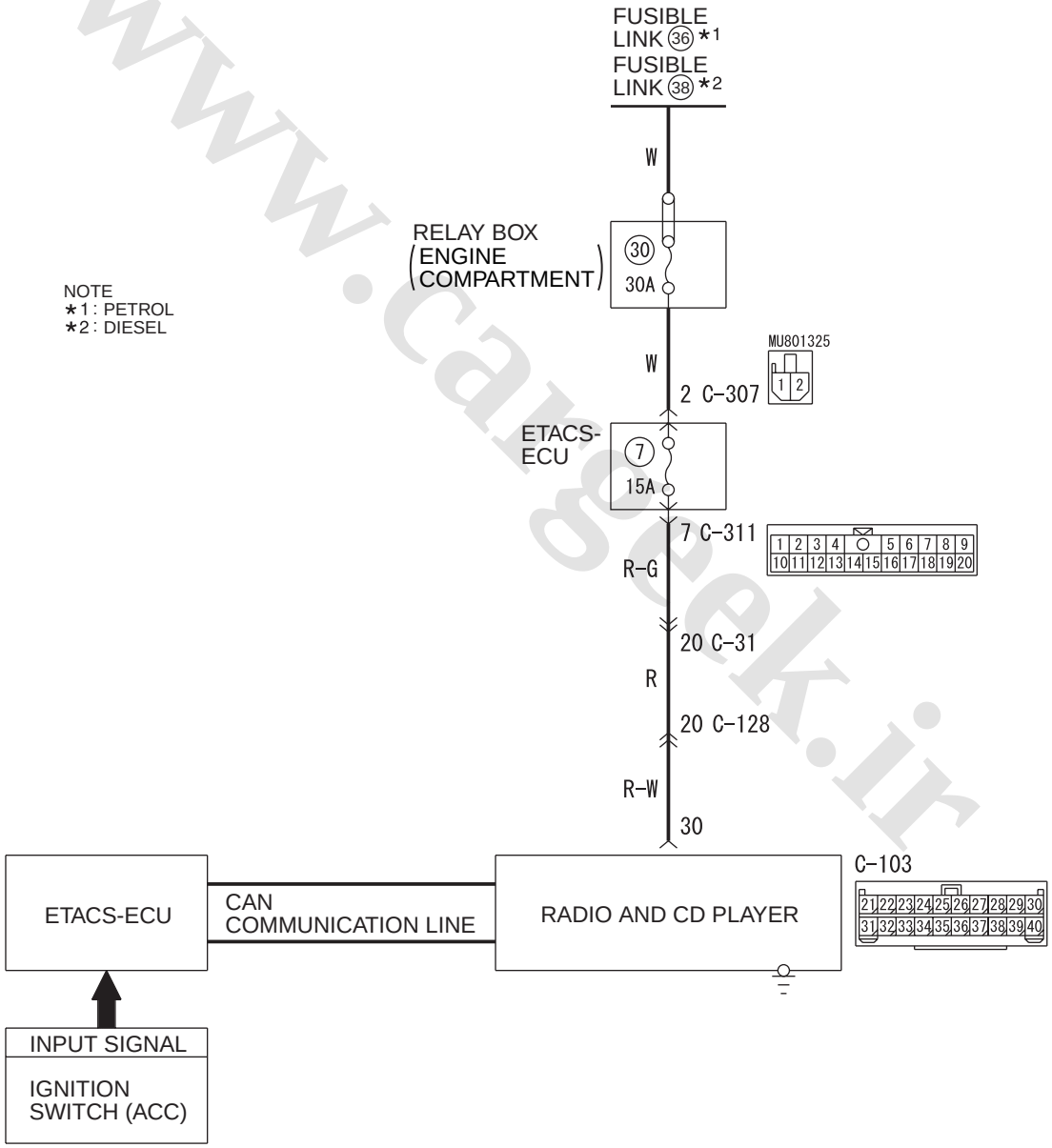

Wire colour code
B : Black LG : Light green G : Green L : Blue W : White Y : Yellow SB : Sky blue
BR : Brown O : Orange GR : Grey R : Red P : Pink V : Violet PU : Purple SI : Silver WDH54E021A

www.cargeek.ir

www.CarGeek.ir

Connector: C-103 <LHD>

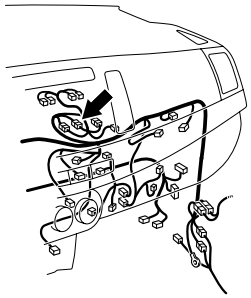

AC701094AJ

Connectors: C-103 <RHD>

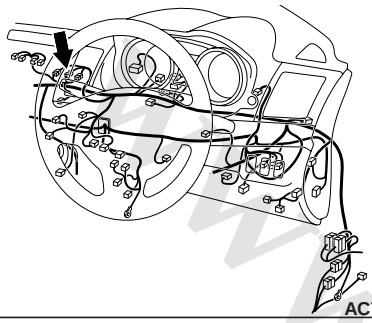

AC701122DC

Connectors: C-307, C-311 <LHD>
ETACS-ECU

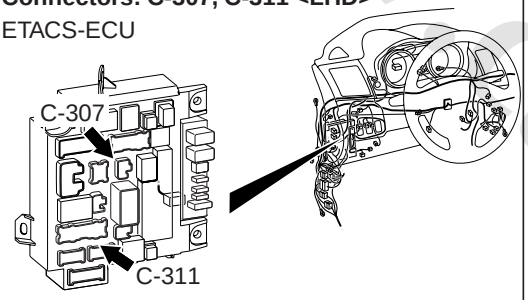

ACA00886AS

Connectors: C-307, C-311 <RHD>
ETACS-ECU

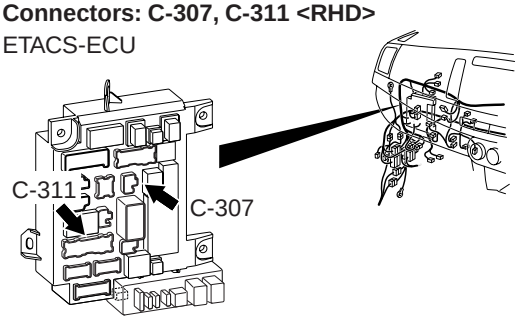

ACA00887AS

OPERATION

When the ignition switch is in the ON or ACC position, the radio and CD player power can be turned ON. With the radio and CD player power ON, when the ignition switch is turned to the OFF position, the power for radio and CD player is also turned OFF.

COMMENTS ON TROUBLE SYMPTOM

Provided that the audio diagnosis code is not set, if the power for radio and CD player cannot be turned ON, the radio and CD player, or power supply circuit for radio and CD player may have a problem, or the option coding information may be inconsistent.

PROBABLE CAUSES

- Malfunctions of radio and CD player
- Malfunction of the ETACS-ECU
- Option coding information inconsistency
- Damaged harness wires and connectors

DIAGNOSIS PROCEDURE

STEP 1. ETACS-ECU coding data check

(1) Operate the M.U.T.-III to read the ETACS-ECU option coding information (Refer to GROUP 00 – Coding Table).
(2) Check that the "AUDIO" is set to "Present."

Q: Is the check result normal?
YES : Go to Step 2.
NO : Operate the M.U.T.-III to set the option coding "AUDIO" to "Present," and check the trouble symptom.

STEP 2. M.U.T.-III other system diagnosis code

Check if the diagnosis code is set to the ETACS-ECU.

Q: Is the check result normal?
YES : Troubleshoot the ETACS-ECU. Refer to ETACS-ECU – Troubleshooting .
NO : Go to Step 3.

STEP 3. M.U.T.-III other system data list

Check the input signal of ACC relay.

- Turn the ignition switch to the ACC position.

Item No.	Item name	Normal condition
Item 288	ACC switch	ON

OK: Normal condition is displayed.

Q: Is the check result normal?
YES : Go to Step 4.
NO : Refer to ETACS – Input Signal Procedure 1 "The ignition switch (ACC) signal is not sent to the ETACS-ECU" .

STEP 4. Connector check: C-103 radio and CD player connector

Q: Is the check result normal?

www.cargeek.ir

www.CarGeek.ir

YES : Go to Step 5.
NO : Repair the defective connector.

STEP 5. Voltage measurement at C-103 radio and CD player connector.

(1) Disconnect the connector, and measure at the wiring harness-side connector.
(2) Voltage between C-103 radio and CD player connector terminal No.30 and the body earth

OK: System voltage

Q: Is the check result normal?
YES : Go to Step 7.
NO : Go to Step 6.

STEP 6. Check the wiring harness between C-103 radio and CD player connector terminal No.30 and fusible link (36) <Petrol> or (38) <Diesel>

- Check the power supply line (battery power supply) for open circuit.

NOTE: Prior to the wiring harness inspection, check intermediate connector C-31, C-128, ETACS-ECU connector C-307 and C-311, and repair if necessary.

Q: Is the check result normal?
YES : Go to Step 8.
NO : Repair the wiring harness.

STEP 7. Check that the radio and CD player is correctly earthed the radio and CD player should be connected to the earth with an assembly screw.

Q: Is the radio and CD player correctly grounded?
YES : Go to Step 8.
NO : Securely install and earth the radio and CD player.

STEP 8. Retest the system

Check if the radio and CD player power is turned ON.

Q: Is the check result normal?
YES : The trouble can be an intermittent malfunction (Refer to GROUP 00 – How to use Troubleshooting/inspection Service Points – How to Cope with Intermittent Malfunction).
NO : Replace the radio and CD player.

www.cargeek.ir
www.cargeek.ir

www.CarGeek.ir

Inspection Procedure 1: Power of the radio and CD player does not turn ON when the ignition switch is in the "ACC" position or "ON" position. <Vehicles with Auto Stop & Go (AS&G) System>

⚠ CAUTION

Before replacing the radio and CD player, ensure that the power supply circuit, the earth circuit and the communication circuit are normal.

Radio and CD Player Power Source Circuit

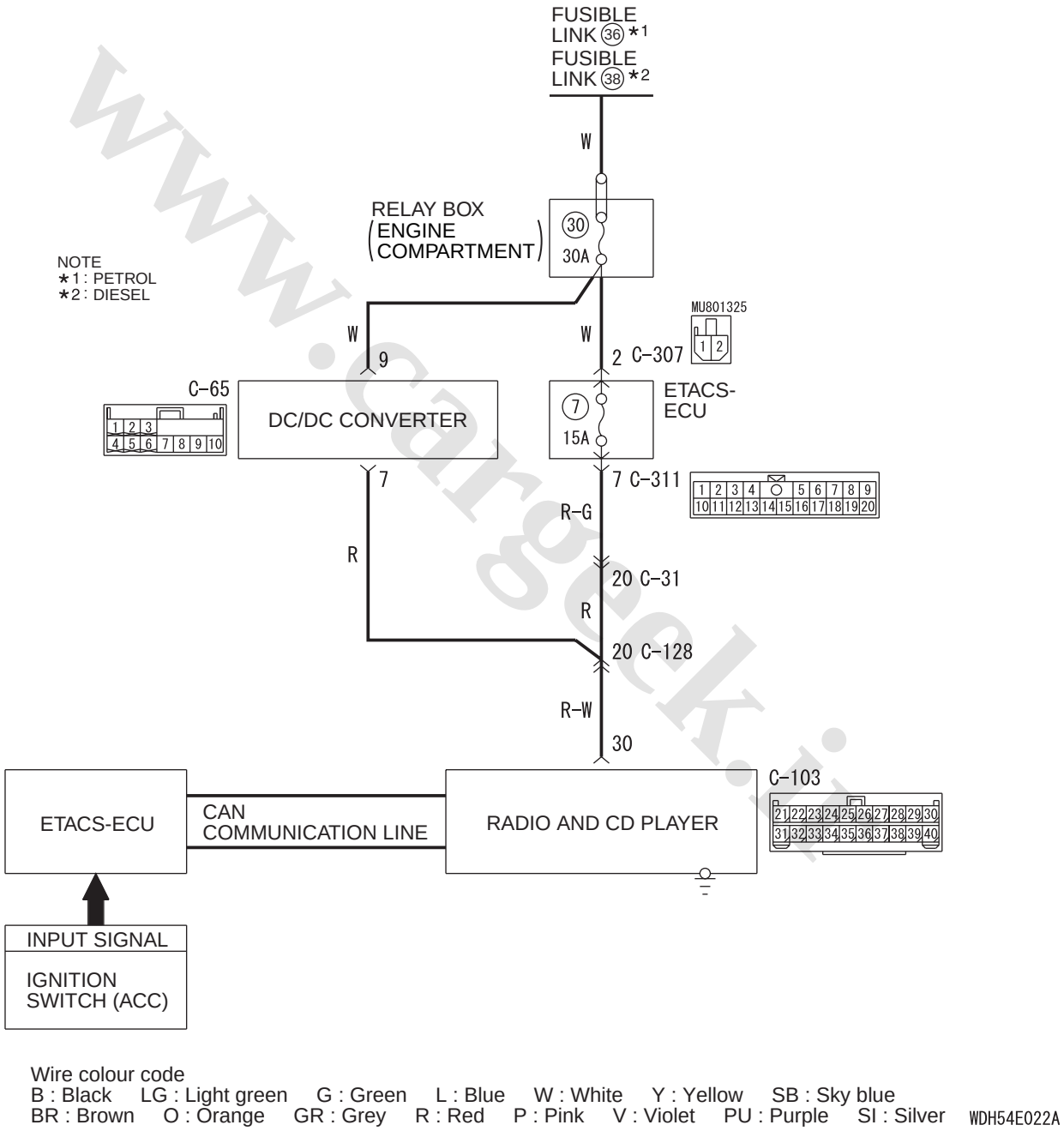

Wire colour code
B : Black LG : Light green G : Green L : Blue W : White Y : Yellow SB : Sky blue
BR : Brown O : Orange GR : Grey R : Red P : Pink V : Violet PU : Purple SI : Silver WDH54E022A

www.cargeek.ir

www.CarGeek.ir

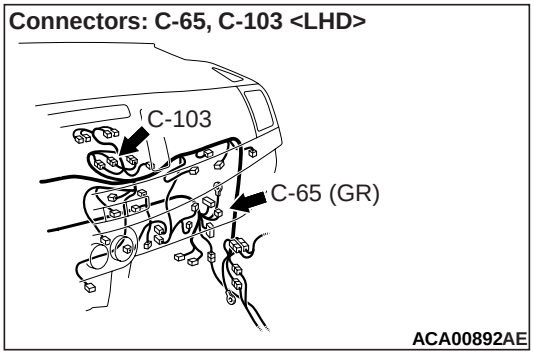

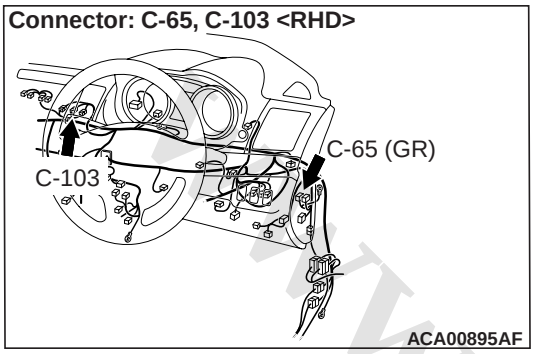

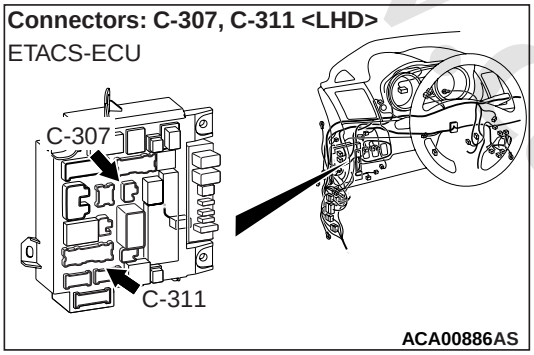

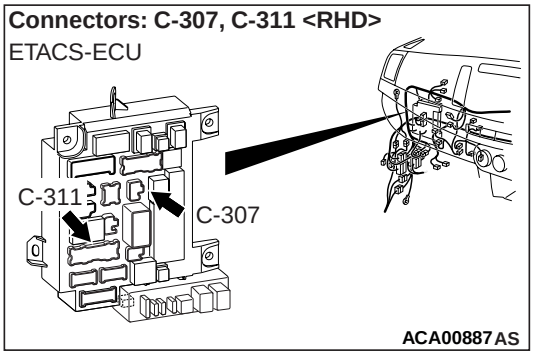

OPERATION

When the ignition switch is in the ON or ACC position, the radio and CD player power can be turned ON. With the radio and CD player power ON, when the ignition switch is turned to the OFF position, the power for radio and CD player is also turned OFF.

COMMENTS ON TROUBLE SYMPTOM

Provided that the audio diagnosis code is not set, if the power for radio and CD player cannot be turned ON, the radio and CD player, or power supply circuit for radio and CD player may have a problem, or the option coding information may be inconsistent.

NOTE: From the fusible link to C-128 intermediate connector, the Radio and CD player uses the same power supply circuit as that of AUDIO display (centre panel unit). Therefore, check first if the AUDIO display (centre panel unit) is displayed. If the AUDIO display (centre panel unit) is not displayed, carry out in advance the troubleshooting of "The radio and CD player does not operate normally by operating the audio control unit of the centre panel unit". (Refer to .)

PROBABLE CAUSES

- Malfunctions of radio and CD player
- Malfunction of the ETACS-ECU
- Malfunction of the DC/DC converter
- Option coding information inconsistency
- Damaged harness wires and connectors

DIAGNOSIS PROCEDURE

STEP 1. ETACS-ECU coding data check

(1) Operate the M.U.T.-III to read the ETACS-ECU option coding information (Refer to GROUP 00 – Coding Table).
(2) Check that the "AUDIO" is set to "Present."

Q: Is the check result normal?
YES : Go to Step 2.
NO : Operate the M.U.T.-III to set the option coding "AUDIO" to "Present," and check the trouble symptom.

STEP 2. M.U.T.-III other system diagnosis code

Check if the diagnosis code is set to the ETACS-ECU.

Q: Is the check result normal?
YES : Troubleshoot the ETACS-ECU. Refer to ETACS-ECU – Troubleshooting .
NO : Go to Step 3.

www.cargeek.ir

www.CarGeek.ir

STEP 3. M.U.T.-III other system data list

Check the input signal of ACC relay.

- Turn the ignition switch to the ACC position.

Item No.	Item name	Normal condition
Item 288	ACC switch	ON

OK: Normal condition is displayed.

Q: Is the check result normal?
YES : Go to Step 4.
NO : Refer to ETACS – Input Signal Procedure 1 "The ignition switch (ACC) signal is not sent to the ETACS-ECU" .

STEP 4. Connector check: C-103 radio and CD player connector

Q: Is the check result normal?
YES : Go to Step 5.
NO : Repair the defective connector.

STEP 5. Voltage measurement at C-103 radio and CD player connector.

(1) Disconnect the connector, and measure at the wiring harness-side connector.
(2) Voltage between C-103 radio and CD player connector terminal No.30 and the body earth

OK: System voltage

Q: Is the check result normal?
YES : Go to Step 12.
NO : Go to Step 6.

STEP 6. Connector check: C-65 DC/DC converter connector

Q: Is the check result normal?
YES : Go to Step 7.
NO : Repair the defective connector.

STEP 7. Voltage measurement at C-65 DC/DC converter connector.

(1) Disconnect C-65 DC/DC converter connector, and measure at the wiring harness side.
(2) Measure the voltage between terminal No.9 and body earth.

OK: System voltage

Q: Is the check result normal?
YES : Go to Step 8.
NO : Go to Step 10.

STEP 8. Check the DC/DC converter.

Check the continuity of the DC/DC converter (Refer to).

Q: Is the check result normal?
YES : Go to Step 9.
NO : Replace the DC/DC converter.

STEP 9. Check the wiring harness between C-65 DC/DC converter connector terminal No.1 and C-103 radio and CD player connector terminal No. 30.

- Check the power supply line for open circuit and short circuit.

NOTE: Prior to the wiring harness inspection, check intermediate C-128 connector, and repair if necessary.

Q: Is the check result normal?
YES : Go to Step 11
NO : Repair the wiring harness.

STEP 10. Check the wiring harness between C-65 DC/DC converter terminal No.9 and fusible link (36) <Petrol> or (38) <Diesel>.

- Check the power supply line for open circuit and short circuit.

Q: Is the check result normal?
YES : The trouble can be an intermittent malfunction (Refer to GROUP 00, How to use Troubleshooting/inspection Service Points, How to Cope with Intermittent Malfunction).
NO : Repair the wiring harness.

STEP 11. Check the wiring harness between C-103 radio and CD player connector terminal No.30 and fusible link (36) <Petrol> or (38) <Diesel>

- Check the power supply line (battery power supply) for open circuit and short circuit.

NOTE: Prior to the wiring harness inspection, check intermediate C-31, C-128 connector and ETACS-ECU connector C-307 and C-311, and repair if necessary.

Q: Is the check result normal?
YES : Go to Step 12.
NO : Repair the wiring harness.

www.cargeek.ir

www.CarGeek.ir

STEP 12. Check that the radio and CD player is correctly earthed the radio and CD player should be connected to the earth with an assembly screw.

Q: Is the radio and CD player correctly grounded?

YES : Go to Step 13.

NO : Securely install and earth the radio and CD player.

STEP 13. Retest the system

Check if the radio and CD player power is turned ON.

Q: Is the check result normal?

YES : The trouble can be an intermittent malfunction (Refer to GROUP 00 – How to use Troubleshooting/inspection Service Points – How to Cope with Intermittent Malfunction).

NO : Replace the radio and CD player.

www.cargeek.ir

www.cargeek.ir

www.CarGeek.ir

Inspection Procedure 2: No sound is heard. <Vehicles without audio amplifier>

⚠ CAUTION

Before replacing the radio and CD player, ensure that the power supply circuit, the earth circuit and the communication circuit are normal.

Speaker System Circuit

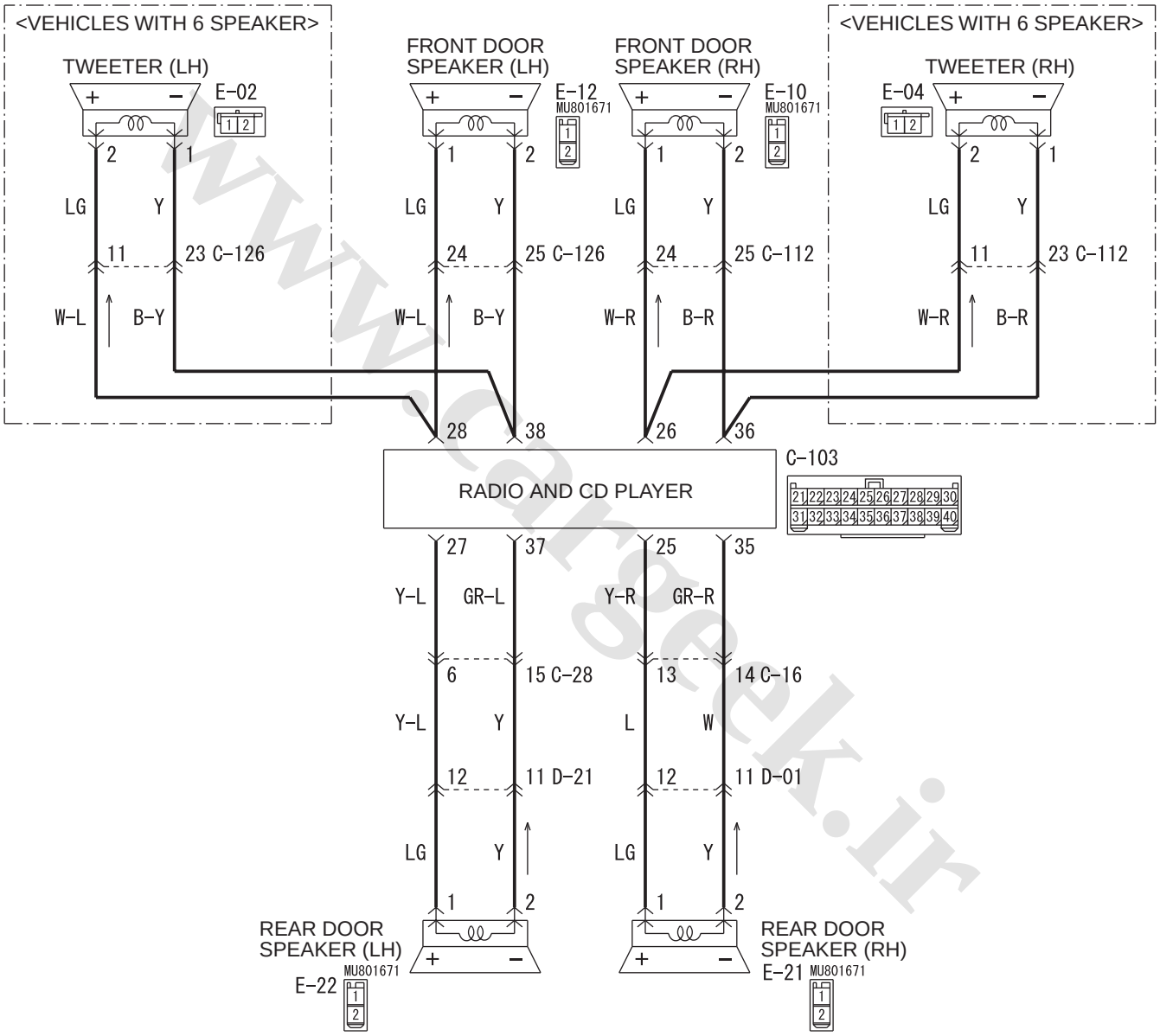

Wire colour code
B : Black LG : Light green G : Green L : Blue W : White Y : Yellow SB : Sky blue
BR : Brown O : Orange GR : Grey R : Red P : Pink V : Violet PU : Purple SI : Silver

WDH54E023A

www.cargeek.ir

www.CarGeek.ir

Connector: C-103 <LHD>

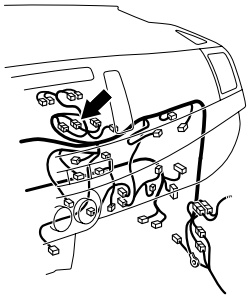

AC701094AJ

Connectors: C-103 <RHD>

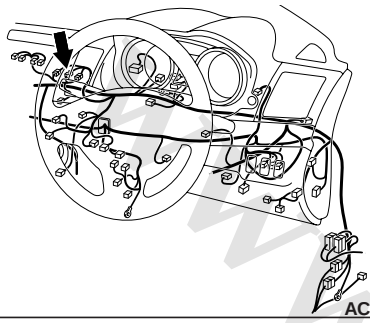

AC701122DC

Connectors: E-02, E-12

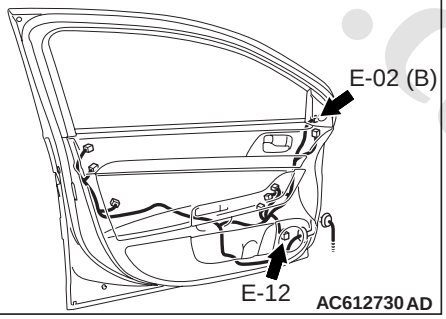

AC612730AD

Connectors: E-04, E-10

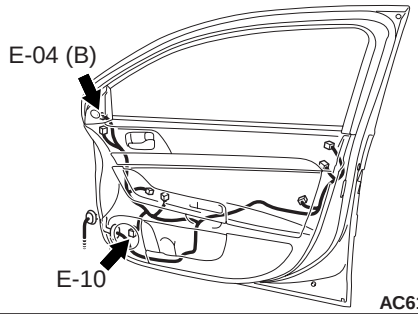

AC612731AD

Connector: E-21

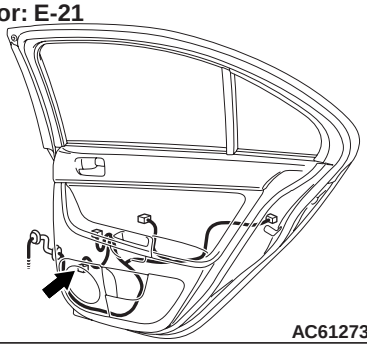

AC612733AB

Connector: E-22

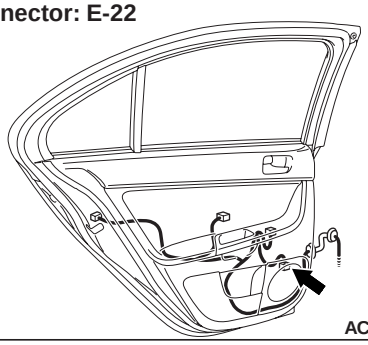

AC612732AB

COMMENTS ON TROUBLE SYMPTOM

If the audio sound is not output, the radio and CD player may have a problem. In addition, if any of the speakers is short-circuited, the protection circuit inside the radio and CD player disables all the speakers to sound. Therefore, if all the speakers do not output sound, the speaker circuit may be shorted or the speaker may be defective. Also, the option coding information may be inconsistent.

PROBABLE CAUSES

- Malfunctions of radio and CD player
- Malfunction of speaker or tweeter
- Option coding information inconsistency
- Damaged harness wires and connectors

DIAGNOSIS PROCEDURE

STEP 1. ETACS-ECU coding data check

(1) Operate the M.U.T.-III to read the ETACS-ECU option coding information (Refer to GROUP 00 – Coding List).

(2) Check that the result matches with the number of speakers ("6 speakers" or "4 speakers") specified by "Number of speaker."

Q: Is the check result normal?

YES : Go to Step 2.

NO : Operate the M.U.T.-III to set the option coding "Number of speaker" to "6 speakers" or "4 speakers", and check the trouble symptom.

www.cargeek.ir

www.CarGeek.ir

STEP 2. Check the following connectors.

Check the following connectors:

- E-12 front door speaker (LH) connector
- E-10 front door speaker (RH) connector
- E-22 rear door speaker (LH) connector
- E-21 rear door speaker (RH) connector
- E-02 tweeter (LH) connector <vehicles with 6-speaker>
- E-04 tweeter (RH) connector <vehicles with 6-speaker>

Q: Are all the connectors in good condition?

YES : Go to Step 3.

NO : Repair the defective connector.

STEP 3. Check the speaker or tweeter.

(1) Remove the speaker or tweeter. Refer to .

(2) Check that the speaker or tweeter outputs the noise when the voltage of 5 V is applied to the speaker or tweeter connector terminal.

Q: Do the speaker or tweeter output the noise?

YES : Go to Step 4.

NO : Replace the speaker or tweeter.

STEP 4. Connector check: C-103 radio and CD player connector

Q: Is the check result normal?

YES : Go to Step 5.

NO : Repair the defective connector.

STEP 5. Check the wiring harness between the speaker or tweeter connector terminal and the radio and CD player connector terminal.

Check the communication lines for short circuit.

- <Front door speaker (LH), tweeter (LH)> Check the wiring harness between E-12 front door speaker (LH) connector terminal No.1, 2 or E-02 tweeter (LH) connector terminal No.2, 1 and C-103 radio and CD player connector terminal No.28, 38.

NOTE: Prior to the wiring harness inspection, check intermediate connector C-126, and repair if necessary.

- <Front door speaker (RH), tweeter (RH)> Check the wiring harness between E-10 front door speaker (RH) connector terminal No.1, 2 or E-04 tweeter (RH) connector terminal No.2, 1 and C-103 radio and CD player connector terminal No.26, 36.

NOTE: Prior to the wiring harness inspection, check intermediate connector C-112, and repair if necessary.

- <Rear door speaker (LH)> Check the wiring harness between E-22 rear door speaker (LH) connector terminal No.1, 2 and C-103 radio and CD player connector terminal No.27, 37.

NOTE: Prior to the wiring harness inspection, check intermediate connectors C-28 and D-21, and repair if necessary.

- <Rear door speaker (RH)> Check the wiring harness between E-21 rear door speaker (RH) connector terminal No.1, 2 and C-103 radio and CD player connector terminal No.25, 35.

NOTE: Prior to the wiring harness inspection, check intermediate connectors C-16 and D-01, and repair if necessary.

Q: Is the check result normal?

YES : Go to Step 6.

NO : Repair the wiring harness.

STEP 6. Retest the system

Check if the sound is output from all the speakers.

Q: Is the check result normal?

YES : The trouble can be an intermittent malfunction (Refer to GROUP 00 – How to use Troubleshooting/inspection Service Points – How to Cope with Intermittent Malfunction).

NO : Replace the radio and CD player.

www.cargeek.ir

www.CarGeek.ir

Inspection Procedure 2: No sound is heard. <Vehicles with audio amplifier>

⚠ CAUTION

Before replacing the radio and CD player, ensure that the power supply circuit, the earth circuit and the communication circuit are normal.

Audio System Circuit

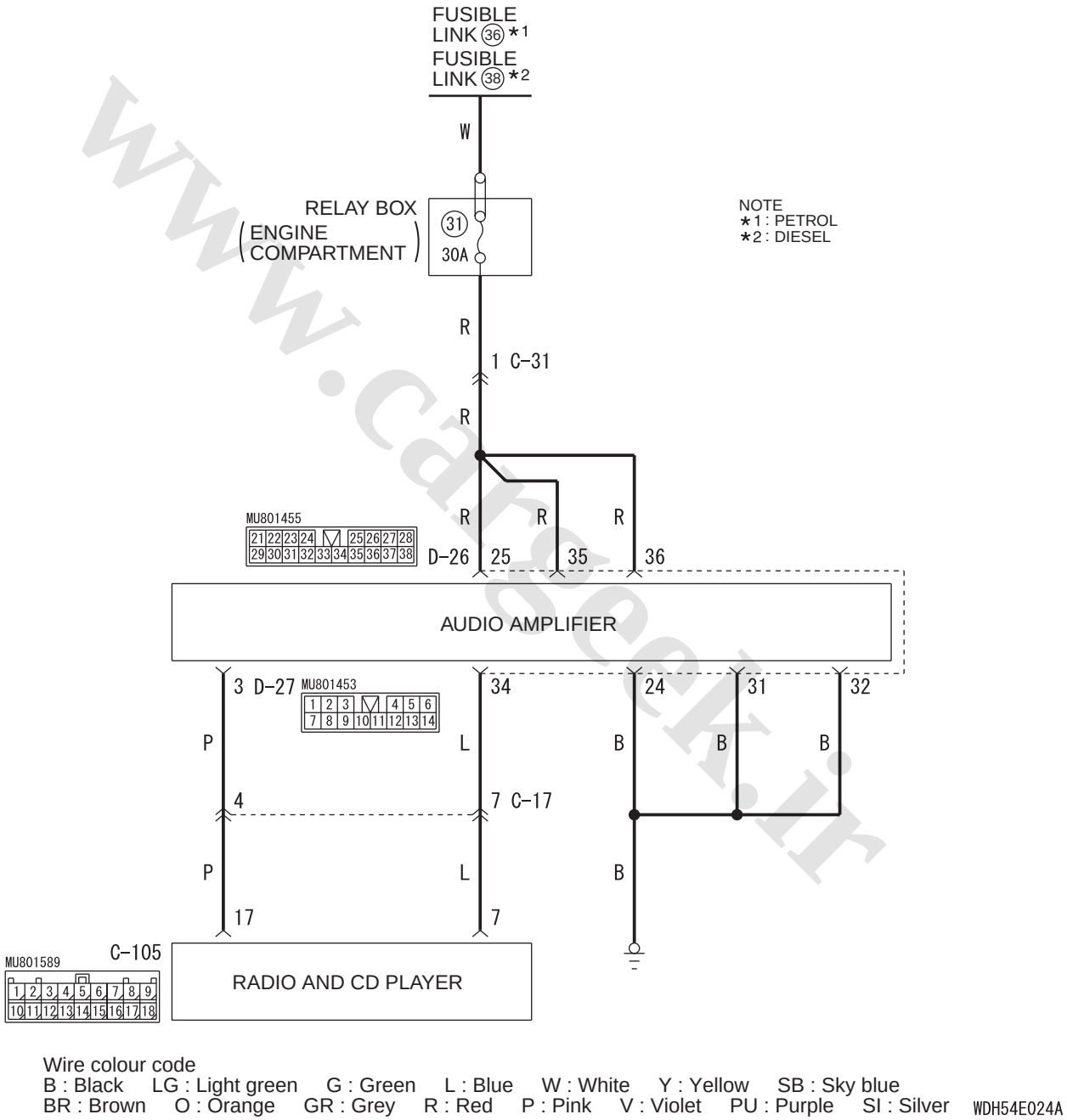

www.cargeek.ir

www.CarGeek.ir

Speaker System Circuit

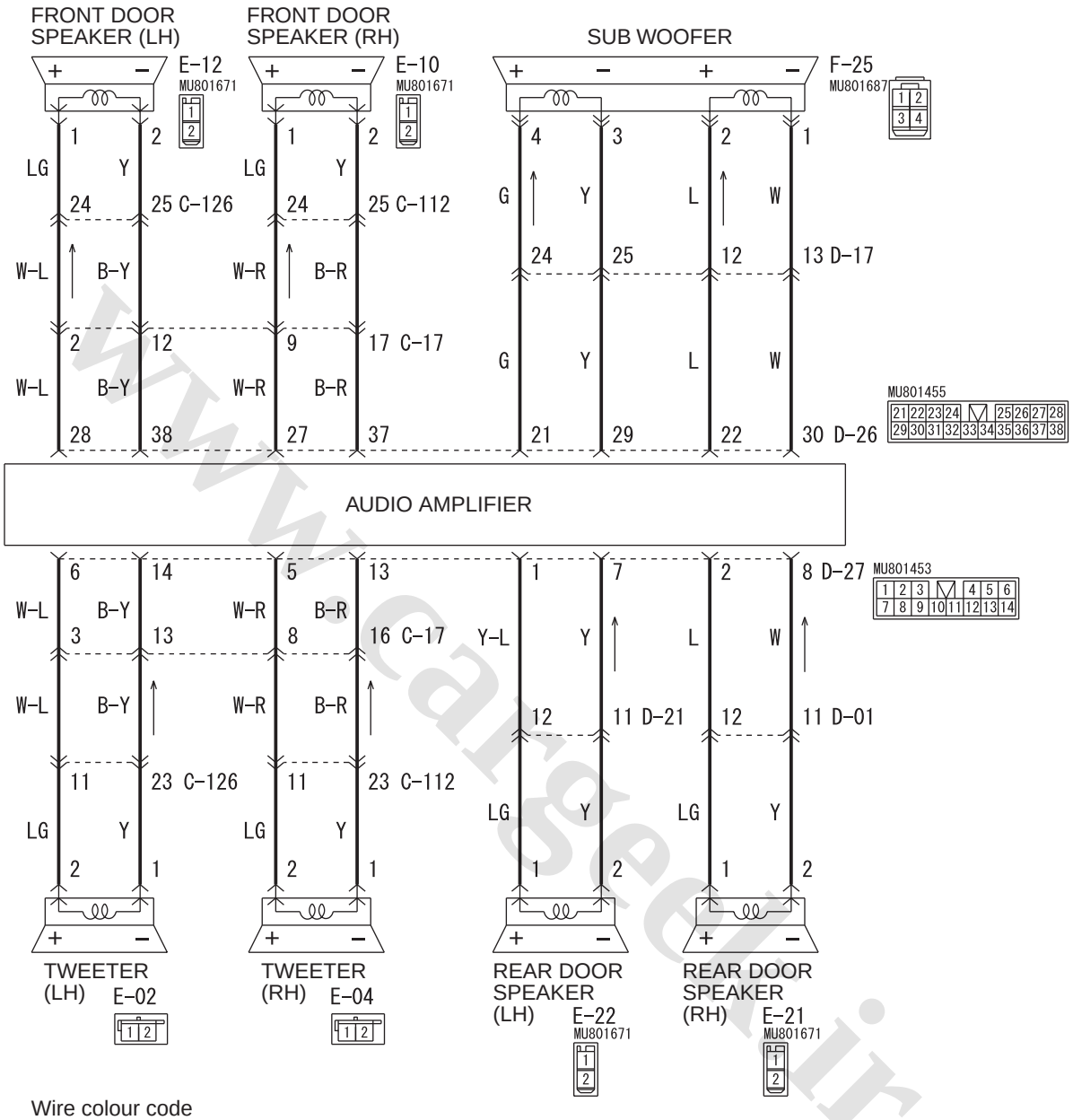

Wire colour code
B : Black LG : Light green G : Green L : Blue W : White Y : Yellow SB : Sky blue
BR : Brown O : Orange GR : Grey R : Red P : Pink V : Violet PU : Purple SI : Silver WDH54E025A

www.cargeek.ir

www.CarGeek.ir

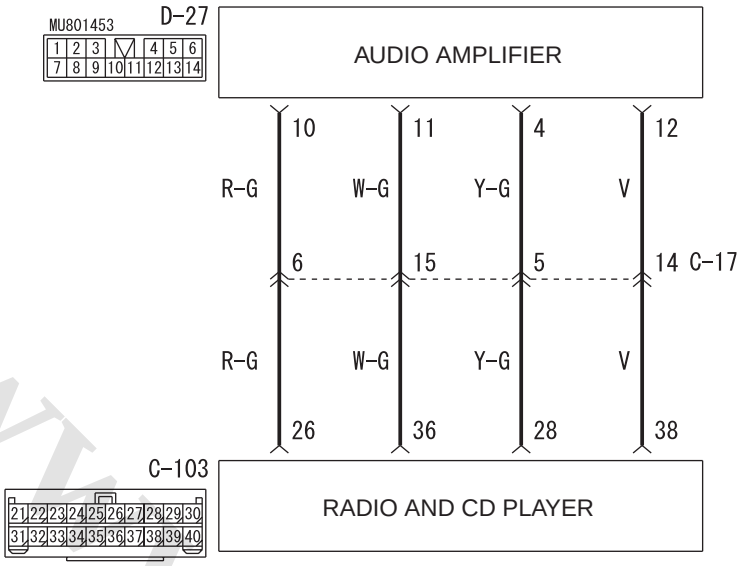

Wire colour code
B : Black LG : Light green G : Green L : Blue W : White Y : Yellow SB : Sky blue
BR : Brown O : Orange GR : Grey R : Red P : Pink V : Violet PU : Purple SI : Silver WDH54E026A

Connector: C-105 <LHD>

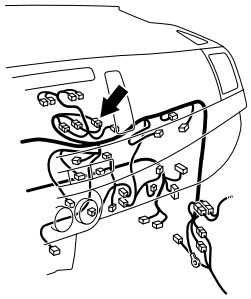

AC701094BG

Connectors: D-26, D-27

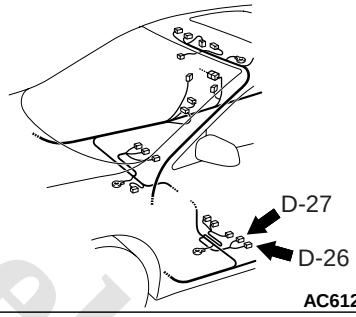

AC612722AH

Connector: C-105 <RHD>

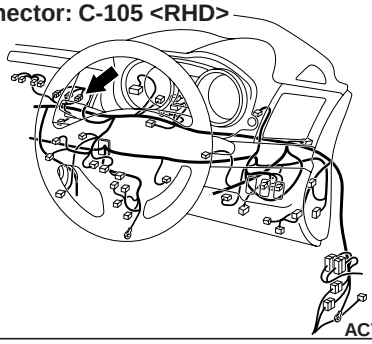

AC701122CH

Connectors: E-02, E-12

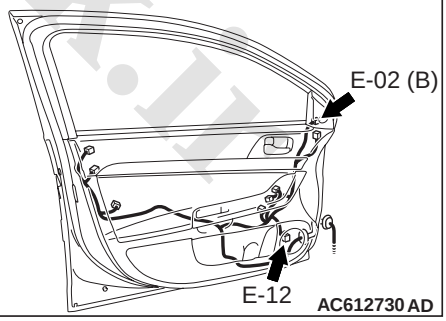

AC612730AD

www.cargeek.ir

www.CarGeek.ir

Connectors: E-04, E-10

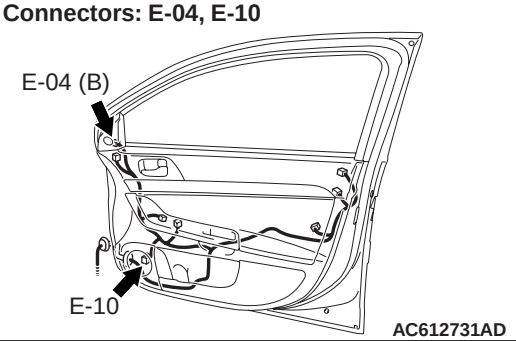

Connector: E-21

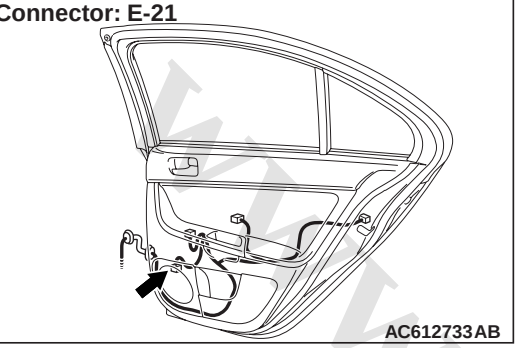

Connector: E-22

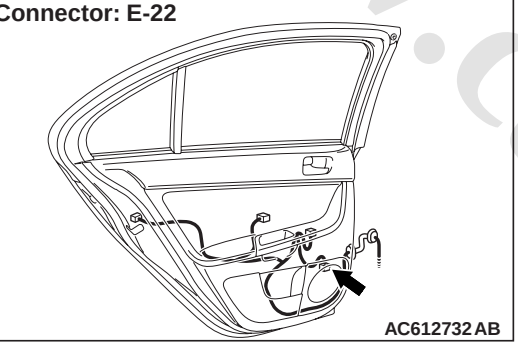

Connector: F-25 <LANCER SPORTBACK>

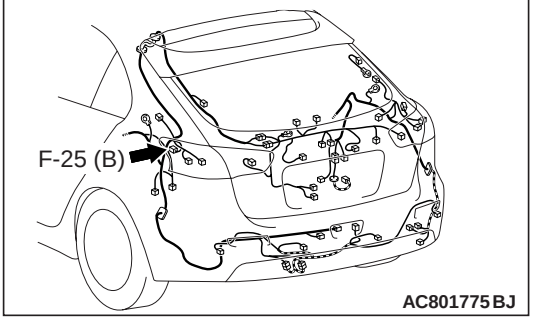

Connector: F-25 <LANCER>

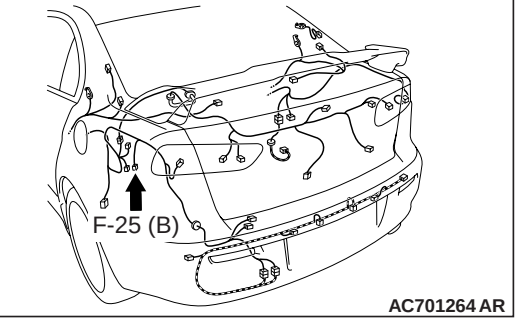

COMMENTS ON TROUBLE SYMPTOM

If the audio sound is not output, the radio and CD player, audio amplifier, or power supply circuit of audio amplifier may have a problem. In addition, if any of the speakers is short-circuited, the protection circuit inside the radio and CD player disables all the speakers to sound. Therefore, if all the speakers do not output sound, the speaker circuit may be shorted or the speaker may be defective. Also, the option coding information may be inconsistent.

PROBABLE CAUSES

- Malfunction of radio and CD player
- Malfunction of audio amplifier
- Malfunction of speaker or tweeter
- Option coding information inconsistency
- Damaged harness wires and connectors

DIAGNOSIS PROCEDURE

STEP 1. ETACS-ECU coding data check

(1) Operate the M.U.T.-III to read the ETACS-ECU option coding information (Refer to GROUP 00 – Coding List).
(2) Check that the "Number of speaker" is set to "Premium."

Q: Is the check result normal?
YES : Go to Step 2.
NO : Operate the M.U.T.-III to set the option coding "Number of speaker" to "Number of speaker," and check the trouble symptom.

STEP 2. Connector check: D-26, D-27 audio amplifier connector

Q: Is the check result normal?
YES : Go to Step 3.
NO : Repair the defective connector.

STEP 3. Resistance measurement at D-26 audio amplifier connector

(1) Disconnect the connector, and measure at the wiring harness side.
(2) Measure the resistance between D-26 audio amplifier connector terminal No.24 and the body earth.

OK: Continuity exists (2 Ω or less)

(3) Measure the resistance between D-26 audio amplifier connector terminal No.31 and the body earth.

OK: Continuity exists (2 Ω or less)

(4) Measure the resistance between D-26 audio amplifier connector terminal No.32 and the body

www.cargeek.ir

earth.

OK: Continuity exists (2 Ω or less)

Q: Is the check result normal?
YES : Go to Step 5.
NO : Go to Step 4.

STEP 4. Check the wiring harness between the D-26 audio amplifier connector terminal No.24, 31, 32 and the body earth

- Check the earth wires for open circuit.

Q: Is the check result normal?
YES : Go to Step 5.
NO : Repair the wiring harness.

STEP 5. Voltage measurement at D-26 audio amplifier connector

(1) Disconnect the connector, and measure at the wiring harness side.
(2) Voltage between D-26 audio amplifier connector terminal No.25 and the body earth

OK: System voltage

(3) Voltage between D-26 audio amplifier connector terminal No.35 and the body earth

OK: System voltage

(4) Voltage between D-26 audio amplifier connector terminal No.36 and the body earth

OK: System voltage

Q: Is the check result normal?
YES : Go to Step 7.
NO : Go to Step 6.

STEP 6. Check the wiring harness between D-26 audio amplifier connector terminal No.25, 35, 36 and fusible link No.36 <petrol> or 38 <diesel>.

- Check the power supply lines for open circuit and short circuit.

NOTE: Prior to the wiring harness inspection, check intermediate connector C-31, and repair if necessary.

Q: Is the check result normal?
YES : Go to Step 7.
NO : Repair the wiring harness.

STEP 7. Connector check: C-103, C-105 radio and CD player connector

Q: Is the check result normal?
YES : Go to Step 8.
NO : Repair the defective connector.

STEP 8. Check the wiring harness between C-105 radio and CD player connector terminal No.7, 17 and D-26 audio amplifier connector No.34 or D-27 audio amplifier connector No.3.

- Check the communication line for open circuit and short circuit.

NOTE: Prior to the wiring harness inspection, check intermediate connector C-17, and repair if necessary.

Q: Is the check result normal?
YES : Go to Step 9.
NO : Repair the wiring harness.

STEP 9. Check the following connectors.

Check the following connectors:

- E-12 front door speaker (LH) connector
- E-10 front door speaker (RH) connector
- E-22 rear door speaker (LH) connector
- E-21 rear door speaker (RH) connector
- E-02 tweeter (LH) connector
- E-04 tweeter (RH) connector
- F-25 sub woofer connector

Q: Are all the connectors in good condition?
YES : Go to Step 10.
NO : Repair the defective connector.

STEP 10. Check the speaker, tweeter or subwoofer.

(1) Remove the speaker, tweeter or subwoofer. Refer to .
(2) Check that the speaker or tweeter outputs the noise when the voltage of 5 V is applied to the speaker or tweeter connector terminal. <speaker or tweeter>
(3) Check that the subwoofer outputs the noise when the voltage of 5 V is applied to the subwoofer connector terminal. <subwoofer>

Q: Do the speaker, tweeter or subwoofer output the noise?
YES : Go to Step 11.
NO : Replace the speaker, tweeter or subwoofer.

www.cargeek.ir

www.CarGeek.ir

STEP 11. Check the wiring harness between the speaker, tweeter or subwoofer connector terminal and the audio amplifier connector terminal.

Check the communication lines for short circuit.

- <Front door speaker (LH)> Check the wiring harness between E-12 front door speaker (LH) connector terminal No.1, 2 and D-26 audio amplifier connector terminal No.28, 38.

NOTE: Prior to the wiring harness inspection, check intermediate connectors C-17 and C-126, and repair if necessary.

- <Front door speaker (RH)> Check the wiring harness between E-10 front door speaker (RH) connector terminal No.1, 2 and D-26 audio amplifier connector terminal No.27, 37.

NOTE: Prior to the wiring harness inspection, check intermediate connectors C-17 and C-112, and repair if necessary.

- <Rear door speaker (LH)> Check the wiring harness between E-22 rear door speaker (LH) connector terminal No.1, 2 and D-27 audio amplifier connector terminal No.1, 7.

NOTE: Prior to the wiring harness inspection, check intermediate connector D-21, and repair if necessary.

- <Rear door speaker (RH)> Check the wiring harness between E-21 rear door speaker (RH) connector terminal No.1, 2 and D-27 audio amplifier connector terminal No.2, 8.

NOTE: Prior to the wiring harness inspection, check intermediate connector D-01, and repair if necessary.

- <Tweeter (LH)> Check the wiring harness between E-02 tweeter (LH) connector terminal No.1, 2 and D-27 audio amplifier connector terminal No.14, 6.

NOTE: Prior to the wiring harness inspection, check intermediate connectors C-17 and C-126, and repair if necessary.

- <Tweeter (RH)> Check the wiring harness between E-04 tweeter (RH) connector terminal No.1, 2 and D-27 audio amplifier connector terminal No.5, 13.

NOTE: Prior to the wiring harness inspection, check intermediate connectors C-17 and C-112, and repair if necessary.

- <Sub woofer> Check the wiring harness between E-25 subwoofer connector terminal No.1, 2, 3, 4 and D-26 audio amplifier connector terminal No.30, 22, 29, 21.

NOTE: Prior to the wiring harness inspection, check intermediate connector D-17, and repair if necessary.

Q: Is the check result normal?
YES : Go to Step 12.
NO : Repair the wiring harness.

STEP 12. Check the wiring harness between C-103 radio and CD player connector terminal No.26, 28, 36, 38 and D-27 audio amplifier connector No.10, 4, 11, 12.

- Check the communication lines for short circuit.

NOTE: Prior to the wiring harness inspection, check intermediate connector C-17, and repair if necessary.

Q: Is the check result normal?
YES : Go to Step 13.
NO : Repair the wiring harness.

STEP 13. Retest the system

Check if the sound is output from all the speakers.

Q: Is the check result normal?
YES : The trouble can be an intermittent malfunction (Refer to GROUP 00 – How to use Troubleshooting/inspection Service Points – How to Cope with Intermittent Malfunction).
NO : Go to Step 14.

STEP 14. Replace the audio amplifier temporarily, and check the trouble symptom.

Replace the audio amplifier temporarily, and check that the sound is output from all the speakers.

Q: Is the check result normal?
YES : Replace the audio amplifier.
NO : Replace the radio and CD player.

www.cargeek.ir

www.CarGeek.ir

Inspection Procedure 3: No sound is heard from one of the speakers. <Vehicles without audio amplifier>

⚠ CAUTION

Before replacing the radio and CD player, ensure that the power supply circuit, the earth circuit and the communication circuit are normal.

Speaker System Circuit

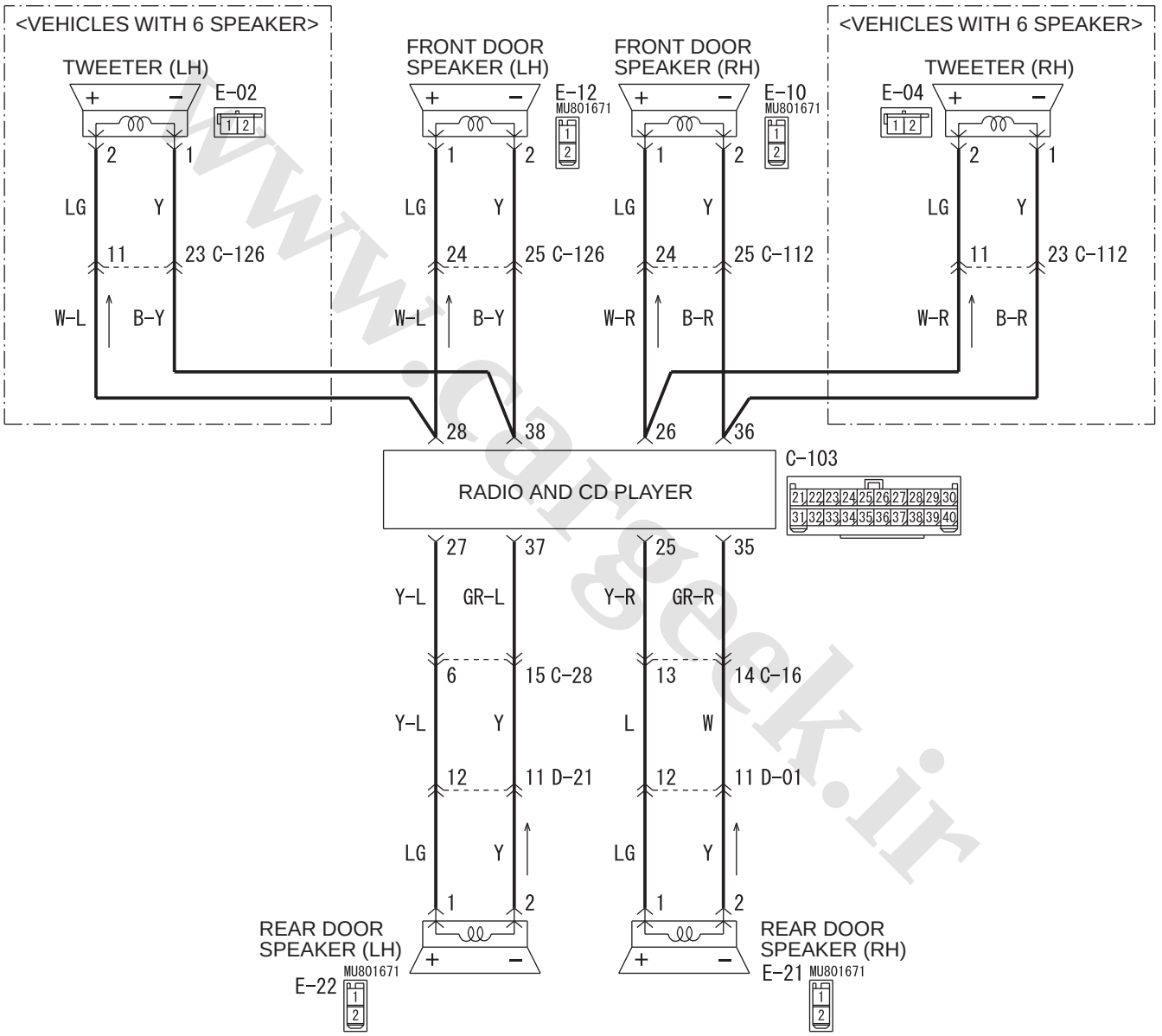

Wire colour code
B : Black LG : Light green G : Green L : Blue W : White Y : Yellow SB : Sky blue
BR : Brown O : Orange GR : Grey R : Red P : Pink V : Violet PU : Purple SI : Silver

WDH54E023A

www.cargeek.ir

www.CarGeek.ir

Connector: C-103 <LHD>

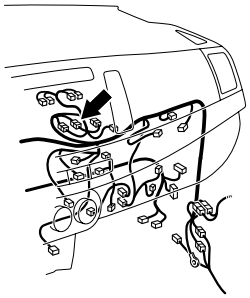

AC701094AJ

Connectors: C-103 <RHD>

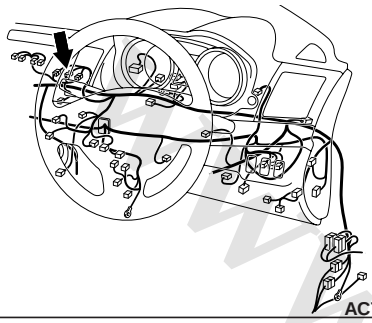

AC701122DC

Connectors: E-02, E-12

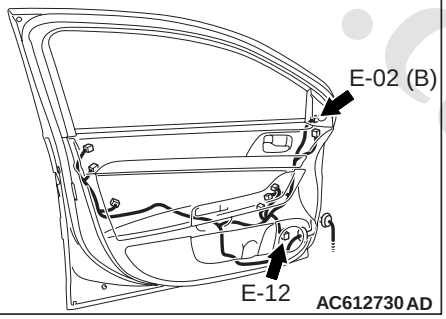

AC612730AD

Connectors: E-04, E-10

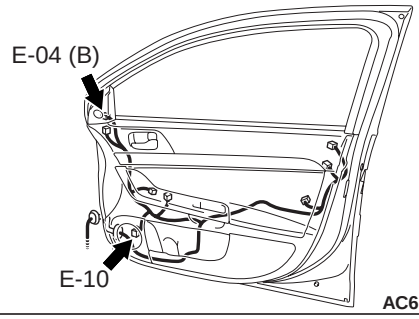

AC612731AD

Connector: E-21

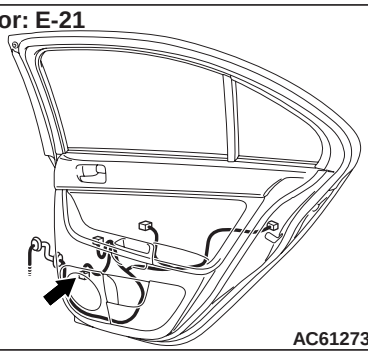

AC612733AB

Connector: E-22

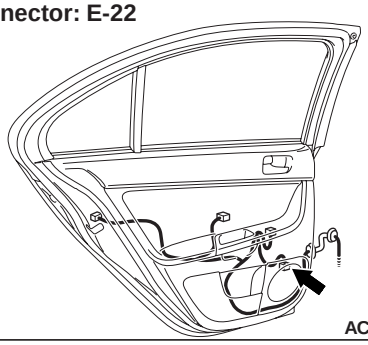

AC612732AB

COMMENTS ON TROUBLE SYMPTOM

If the sound is not output from one of the speakers, the speaker, radio and CD player, communication line from the radio and CD player to the speakers may have a problem.

PROBABLE CAUSES

- Malfunction of speaker
- Malfunctions of radio and CD player
- Damaged harness wires and connectors

DIAGNOSIS PROCEDURE

STEP 1. ETACS-ECU coding data check

(1) Operate the M.U.T.-III to read the ETACS-ECU option coding information (Refer to GROUP 00 – Coding List).

(2) Check that the result matches with the number of speakers ("6 speakers" or "4 speakers") specified by "Number of speaker."

Q: Is the check result normal?

YES : Go to Step 2.

NO : Operate the M.U.T.-III to set the option coding "Number of speaker" to "6 speakers" or "4 speakers", and check the trouble symptom.

STEP 2. Checking with audio speaker check

Perform the audio speaker check, and check which speaker does not output the sound. Refer to .

NOTE: In the following procedure, check the speaker or tweeter that is abnormal.

Q: Is the check result normal?

www.cargeek.ir

www.CarGeek.ir

YES (normal for all) : The trouble can be an intermittent malfunction (Refer to GROUP 00 – How to use Troubleshooting/inspection Service Points – How to Cope with Intermittent Malfunction).

NO (abnormal for all) : Check the radio and CD player power supply and earth circuit, and repair if necessary. If the radio and CD player power supply and earth circuit is normal, replace the radio and CD player.

NO (Either a speaker is abnormal) : Go to Step 3.

STEP 3. Connector check: E-12 <front-LH>, E-10 <front-RH>, E-22 <rear-LH> or E-21 <rear-RH> door speaker connector, E-02 <LH>, E-04 <RH> tweeter connector

Q: Is the check result normal?

YES : Go to Step 4.

NO : Repair the defective connector.

STEP 4. Check the speaker or tweeter.

(1) Remove the speaker or tweeter. Refer to .

(2) Check that the speaker or tweeter outputs the noise when the voltage of 5 V is applied to the speaker or tweeter connector terminal.

Q: Is the check result normal?

YES : Go to Step 5.

NO : Replace the speaker or tweeter.

STEP 5. Connector check: C-103 radio and CD player connector.

Q: Is the check result normal?

YES : Go to Step 6.

NO : Repair the defective connector.

STEP 6. Check the wire harness between the speaker or tweeter connector terminal and the radio and CD player connector terminal.

Check the communication lines for open circuit or short circuit.

- <Front door speaker (LH)> Check the wire harness between E-12 front door speaker (LH) connector terminal No.1, 2 and C-103 radio and CD player connector terminal No.28, 38.

NOTE: Prior to the wiring harness inspection, check intermediate connector C-126, and repair if necessary.

- <Front door speaker (RH)> Check the wire harness between E-10 front door speaker (RH) connector terminal No.1, 2 and C-103 radio and CD player connector terminal No.26, 36.

NOTE: Prior to the wiring harness inspection, check intermediate connector C-112, and repair if necessary.

- <Rear door speaker (LH)> Check the wire harness between E-22 rear door speaker (LH) connector terminal No.1, 2 and C-103 radio and CD player connector terminal No.27, 37.

NOTE: Prior to the wiring harness inspection, check intermediate connectors C-28 and D-21, and repair if necessary.

- <Rear door speaker (RH)> Check the wire harness between E-21 rear door speaker (RH) connector terminal No.1, 2 and C-103 radio and CD player connector terminal No.25, 35.

NOTE: Prior to the wiring harness inspection, check intermediate connectors C-16 and D-01, and repair if necessary.

- <Tweeter (LH)> Check the wire harness between E-02 tweeter (LH) connector terminal No.1, 2 and C-103 radio and CD player connector terminal No.38, 28.

NOTE: Prior to the wiring harness inspection, check intermediate connector C-126, and repair if necessary.

- <Tweeter (RH)> Check the wire harness between E-04 tweeter (RH) connector terminal No.1, 2 and C-103 radio and CD player connector terminal No.36, 26.

NOTE: Prior to the wiring harness inspection, check intermediate connector C-112, and repair if necessary.

Q: Is the check result normal?

YES : Replace the radio and CD player.

NO : Repair the wiring harness.

www.cargeek.ir

www.CarGeek.ir

Inspection Procedure 3: No sound is heard from one of the speakers. <Vehicles with audio amplifier>

⚠ CAUTION

Before replacing the radio and CD player, ensure that the power supply circuit, the earth circuit and the communication circuit are normal.

Speaker System Circuit

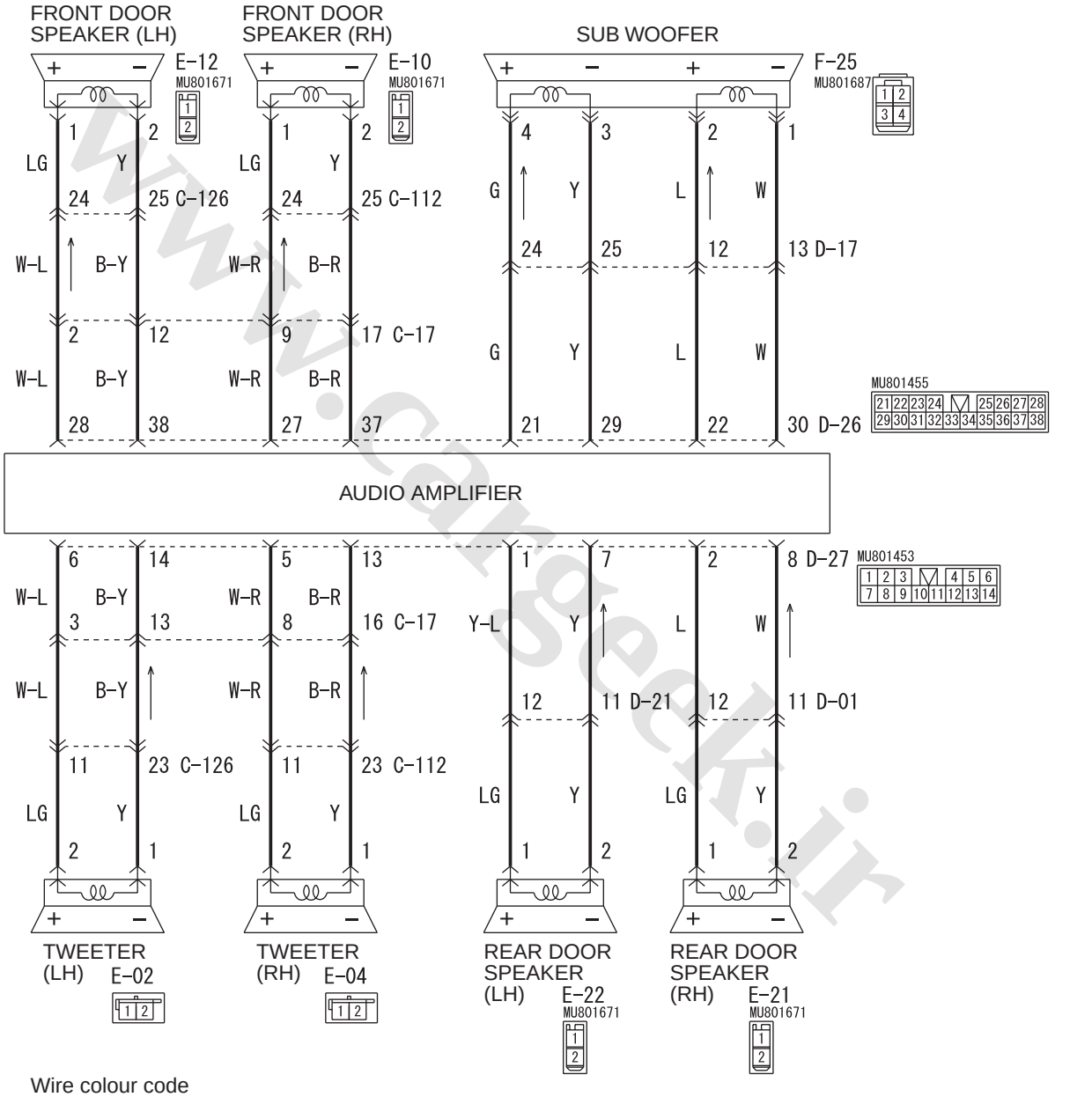

www.cargeek.ir

www.CarGeek.ir

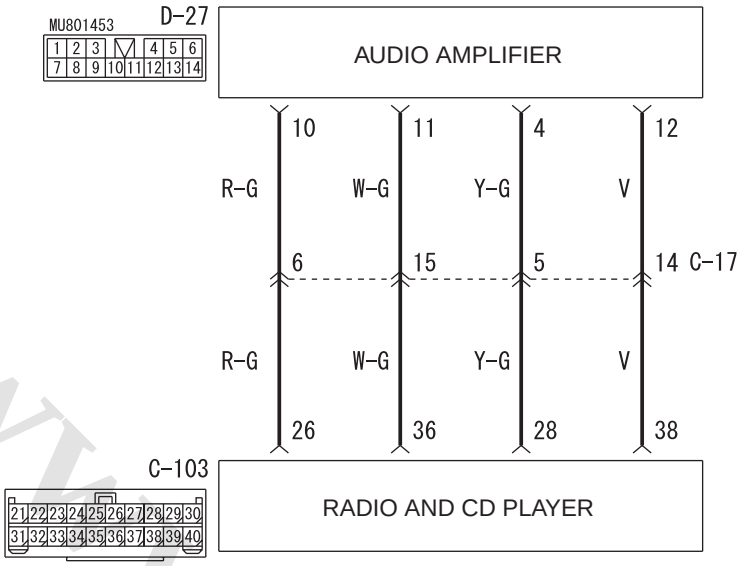

Wire colour code
B : Black LG : Light green G : Green L : Blue W : White Y : Yellow SB : Sky blue
BR : Brown O : Orange GR : Grey R : Red P : Pink V : Violet PU : Purple SI : Silver WDH54E026A

Connector: C-103 <LHD>

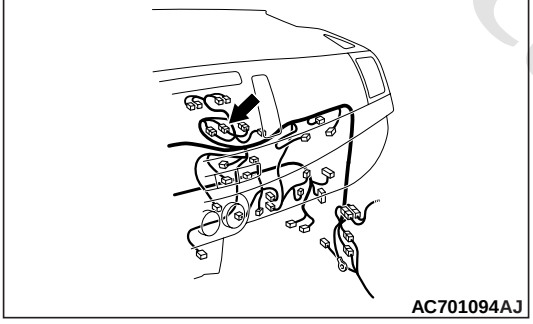

Connectors: D-26, D-27

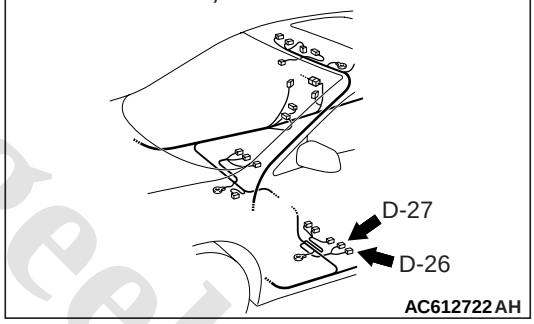

Connectors: C-103 <RHD>

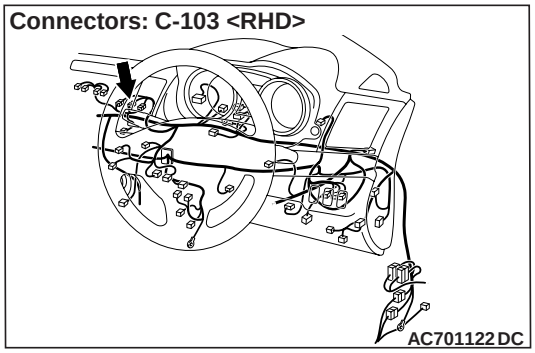

Connectors: E-02, E-12

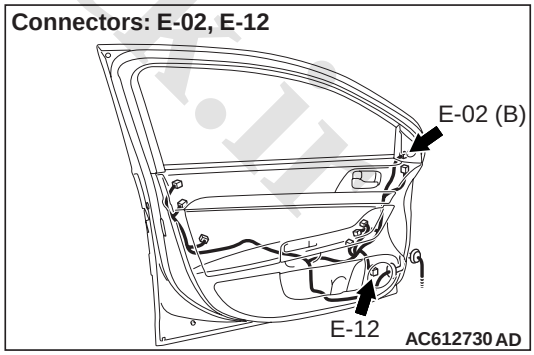

www.cargeek.ir

www.CarGeek.ir

Connectors: E-04, E-10

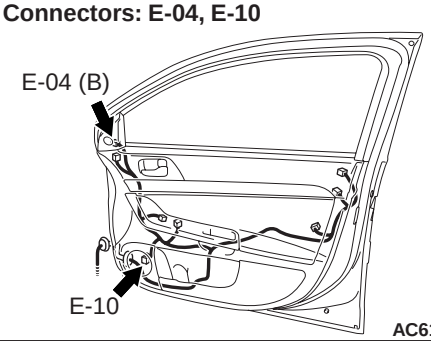

AC612731AD

Connector: E-21

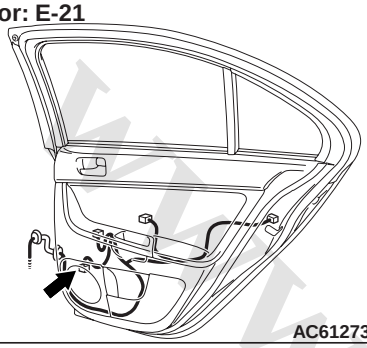
AC612733AB

Connector: E-22

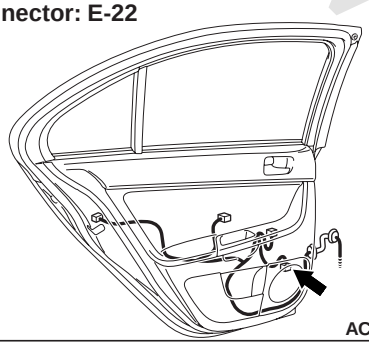
AC612732AB

Connector: F-25 <LANCER SPORTBACK>

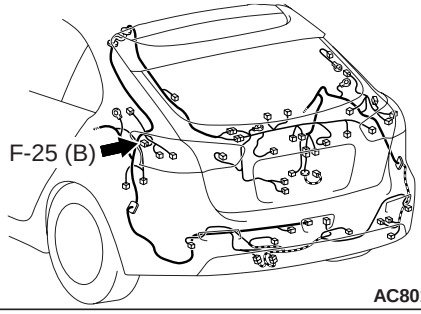

AC801775BJ

Connector: F-25 <LANCER>

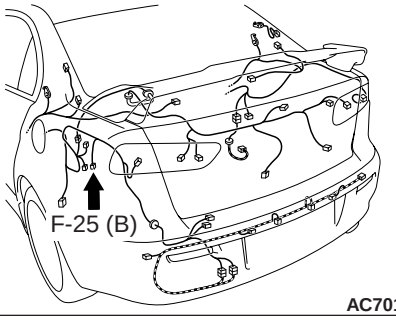

AC701264AR

COMMENTS ON TROUBLE SYMPTOM

If the sound is not heard from one of the speakers, the speaker, radio and CD player, audio amplifier, communication line from the radio and CD player to the audio amplifier, or communication line from the audio amplifier to the speaker may have a problem. Also, the option coding information may be inconsistent.

PROBABLE CAUSES

- Malfunction of speaker
- Malfunctions of radio and CD player
- Malfunction of audio amplifier
- Option coding information inconsistency
- Damaged harness wires and connectors

DIAGNOSIS PROCEDURE

STEP 1. ETACS-ECU coding data check

(1) Operate the M.U.T.-III to read the ETACS-ECU option coding information (Refer to GROUP 00 – Coding List).
(2) Check that the "Number of speaker" is set to "Premium."

Q: Is the check result normal?

YES : Go to Step 2.
NO : Operate the M.U.T.-III to set the option coding "Number of speaker" to "Number of speaker," and check the trouble symptom.

STEP 2. Checking with audio speaker check

Perform the audio speaker check, and check which speaker does not output the sound. Refer to .

NOTE: In the following procedure, check the speaker or tweeter that is abnormal.

Q: Is the check result normal?

YES : The trouble can be an intermittent malfunction (Refer to GROUP 00 – How to use Troubleshooting/inspection Service Points – How to Cope with Intermittent Malfunction).
NO : Go to Step 3.

STEP 3. Connector check: E-12 <front-LH>, E-10 <front-RH>, E-22 <rear-LH> or E-21 <rear-RH> door speaker connector, E-02 <LH>, E-04 <RH> tweeter connector, F-25 subwoofer connector

Q: Is the check result normal?

YES : Go to Step 4.
NO : Repair the defective connector.

www.cargeek.ir

www.CarGeek.ir

STEP 4. Check the speaker, tweeter or subwoofer.

(1) Remove the speaker, tweeter or subwoofer. Refer to .
(2) Check that the speaker or tweeter outputs the noise when the voltage of 5 V is applied to the speaker or tweeter connector terminal. <speaker or tweeter>
(3) Check that the subwoofer outputs the noise when the voltage of 5 V is applied to the subwoofer connector terminal. <subwoofer>

Q: Is the check result normal?
YES : Go to Step 5.
NO : Replace the speaker, tweeter or subwoofer.

STEP 5. Connector check: D-26 <front door speaker or sub woofer>, D-27 <tweeter or rear door speaker> audio amplifier connector

Q: Is the check result normal?
YES : Go to Step 6.
NO : Repair the defective connector.

www.cargeek.ir

www.cargeek.ir

www.CarGeek.ir

STEP 6. Check the wire harness between the speaker or tweeter connector terminal and the audio amplifier connector terminal.

Check the communication lines for open circuit or short circuit.

- <Front door speaker (LH)> Check the wire harness between E-12 front door speaker (LH) connector terminal No.1, 2 and D-26 audio amplifier connector terminal No.28, 38.

NOTE: Prior to the wiring harness inspection, check intermediate connectors C-17 and C-126, and repair if necessary.

- <Front door speaker (RH)> Check the wire harness between E-10 front door speaker (RH) connector terminal No.1, 2 and D-26 audio amplifier connector terminal No.27, 37.

NOTE: Prior to the wiring harness inspection, check intermediate connectors C-17 and C-112, and repair if necessary.

- <Rear door speaker (LH)> Check the wire harness between E-22 rear door speaker (LH) connector terminal No.1, 2 and D-27 audio amplifier connector terminal No.1, 7.

NOTE: Prior to the wiring harness inspection, check intermediate connector D-21, and repair if necessary.

- <Rear door speaker (RH)> Check the wire harness between E-21 rear door speaker (RH) connector terminal No.1, 2 and D-27 audio amplifier connector terminal No.2, 8.

NOTE: Prior to the wiring harness inspection, check intermediate connectors D-01, and repair if necessary.

- <Tweeter (LH)> Check the wire harness between E-02 tweeter (LH) connector terminal No.1, 2 and D-27 audio amplifier connector terminal No.14, 6.

NOTE: Prior to the wiring harness inspection, check intermediate connectors C-17 and C-126, and repair if necessary.

- <Tweeter (RH)> Check the wire harness between E-04 tweeter (RH) connector terminal No.1, 2 and D-27 audio amplifier connector terminal No.13, 5.

NOTE: Prior to the wiring harness inspection, check intermediate connectors C-17 and C-112, and repair if necessary.

- <Subwoofer> Check the wire harness between F-25 subwoofer connector terminal No.1, 2, 3, 4 and D-26 audio amplifier connector terminal No.30, 22, 29, 21.

NOTE: Prior to the wiring harness inspection, check intermediate connectors D-17, and repair if necessary.

Q: Is the check result normal?
YES : Go to Step 7.
NO : Repair the wiring harness.

STEP 7. Connector check: C-103 radio and CD player connector

Q: Is the check result normal?
YES : Go to Step 8.
NO : Repair the defective connector.

STEP 8. Check the harness wire between C-103 radio and CD player connector terminal No.26, 28, 36, 38 and D-27 audio amplifier connector No.10, 4, 11, 12.

- Check the communication lines for open circuit.

NOTE: Prior to the wiring harness inspection, check intermediate connector C-17, and repair if necessary.

Q: Is the check result normal?
YES : Go to Step 9.
NO : Repair the wiring harness.

STEP 9. Replace the audio amplifier temporarily, and check the trouble symptom.

Replace the audio amplifier temporarily, and check that the sound is output from the speaker.

Q: Is the check result normal?
YES : Replace the audio amplifier.
NO : Replace the radio and CD player.

www.cargeek.ir

www.CarGeek.ir

Inspection Procedure 4: The radio and CD player does not operate normally by operating the audio control unit of the centre panel unit. <Vehicles without Auto Stop & Go (AS&G) System>

⚠ CAUTION

Before replacing the radio and CD player, ensure that the power supply circuit, the earth circuit and the communication circuit are normal.

www.cargeek.ir

www.cargeek.ir

www.CarGeek.ir

Centre Panel Unit Power Source Circuit

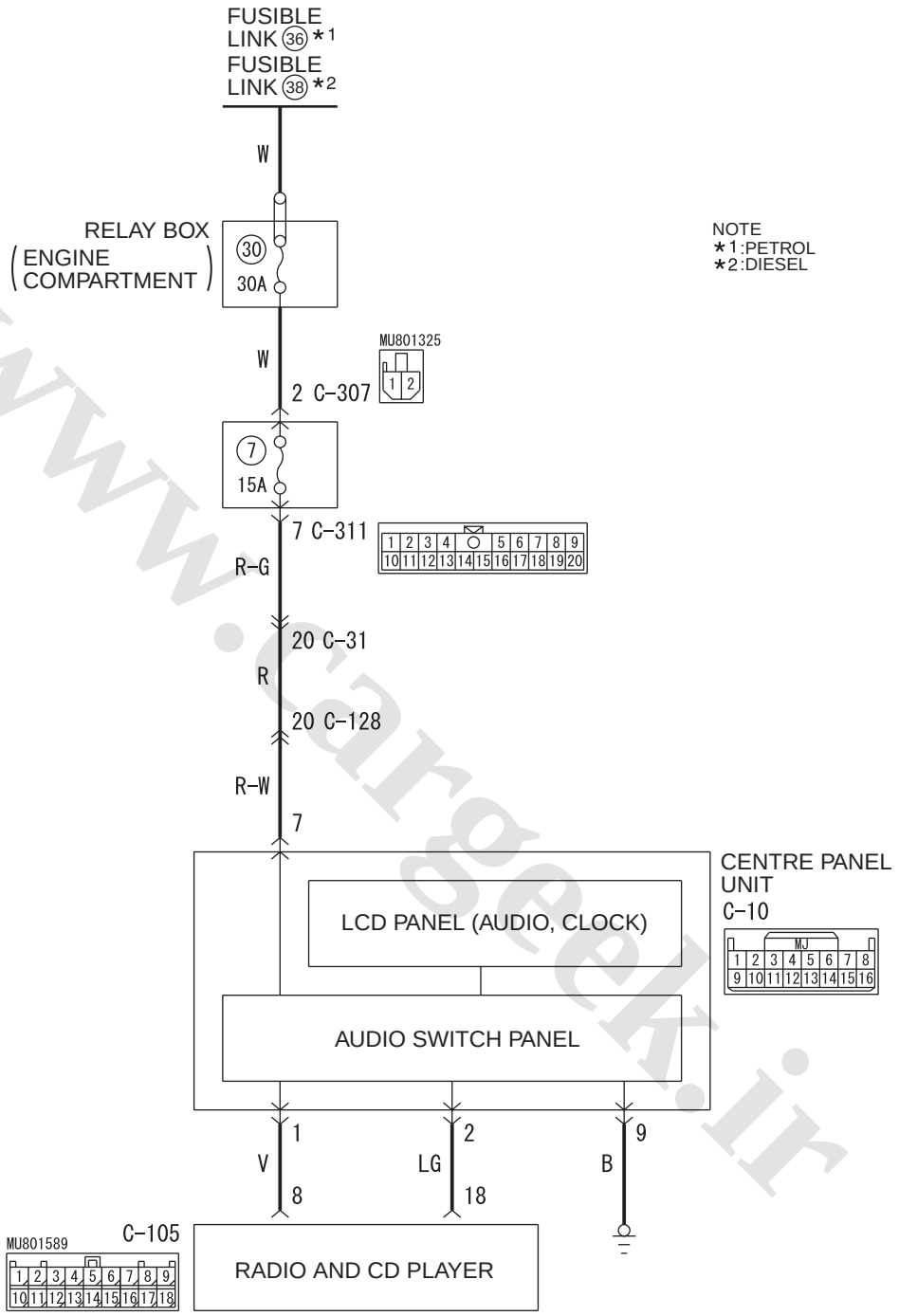

Wire colour code
B : Black LG : Light green G : Green L : Blue W : White Y : Yellow SB : Sky blue
BR : Brown O : Orange GR : Grey R : Red P : Pink V : Violet PU : Purple SI : Silver WDH54E027A

www.cargeek.ir

www.CarGeek.ir

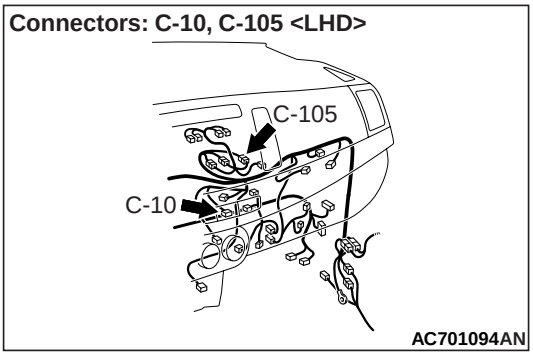

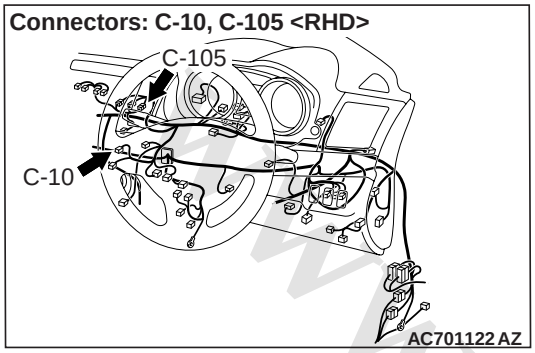

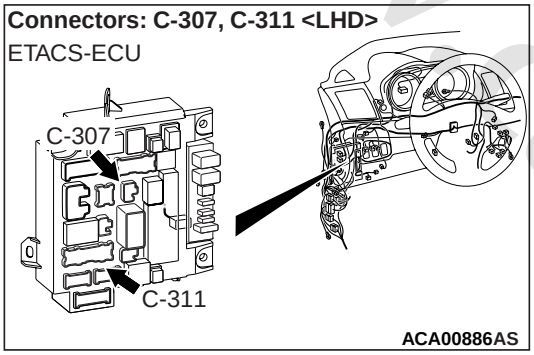

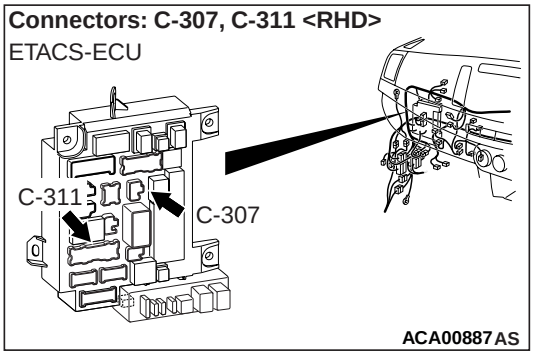

COMMENTS ON TROUBLE SYMPTOM

When the audio does not operate normally by operating the audio control unit of the centre panel unit, the radio and CD player, centre panel unit, or the power supply circuit system of centre panel unit may be faulty.

PROBABLE CAUSES

- Malfunction of radio and CD player
- Malfunction of centre panel unit
- Damaged harness wires and connectors

DIAGNOSIS PROCEDURE

STEP 1. Connector check: C-10 centre panel unit connector

Q: Is the check result normal?
YES : Go to Step 2.
NO : Repair the defective connector.

STEP 2. Resistance measurement at C-10 centre panel unit connector

(1) Disconnect the connector, and measure at the wiring harness-side connector.
(2) Check the continuity between C-10 centre panel unit connector terminal No.9 and body earth.

OK: Continuity exists (2 Ω or less)

Q: Is the check result normal?
YES : Go to Step 4.
NO : Go to Step 3.

STEP 3. Check the wiring harness between C-10 centre panel unit connector terminal No.9 and body earth.

- Check the earth wire for open circuit.

Q: Is the check result normal?
YES : The trouble can be an intermittent malfunction (Refer to GROUP 00 – How to use Troubleshooting/inspection Service Points – How to Cope with Intermittent Malfunction).
NO : Repair the wiring harness.

STEP 4. Voltage measurement at C-10 centre panel unit connector.

(1) Disconnect the connector, and measure at the wiring harness-side connector.
(2) Measure the voltage between C-10 centre panel unit connector terminal No.7 and body earth.

OK: System voltage

Q: Is the check result normal?
YES : Go to Step 6.
NO : Go to Step 5.

STEP 5. Check the wiring harness between C-10 centre panel unit connector terminal No.7 and fusible link (36) <Petrol> or (38) <Diesel>

- Check the power supply line for open circuit and short circuit.

NOTE: Prior to the wiring harness inspection, check intermediate connector C-31, C-128, ETACS-ECU connector C-307 and C-311, and repair if necessary.

www.cargeek.ir

www.CarGeek.ir

Q: Is the check result normal?
YES : Go to Step 8.
NO : Repair the wiring harness.

STEP 6. Connector check: C-105 radio and CD player connector

Q: Is the check result normal?
YES : Go to Step 7.
NO : Repair the defective connector.

STEP 7. Check the wiring harness between C-105 radio and CD player connector terminal No.8, 18 and C-10 centre panel unit connector terminal No.1, 2.

- Check the communication lines for open circuit and short circuit.

Q: Is the check result normal?
YES : Go to Step 8.
NO : Repair the wiring harness.

STEP 8. Replace the centre panel unit temporarily, and check the trouble symptom.

Replace the centre panel unit temporarily, and check that the audio works normally.

Q: Is the check result normal?
YES : Replace the centre panel unit.
NO : Replace the radio and CD player.

www.cargeek.ir
www.cargeek.ir

www.CarGeek.ir

Inspection Procedure 4: The radio and CD player does not operate normally by operating the audio control unit of the centre panel unit. <Vehicles with Auto Stop & Go (AS&G) System>

⚠ CAUTION

Before replacing the radio and CD player, ensure that the power supply circuit, the earth circuit and the communication circuit are normal.

www.cargeek.ir

www.cargeek.ir

www.CarGeek.ir

Centre Panel Unit Power Source Circuit

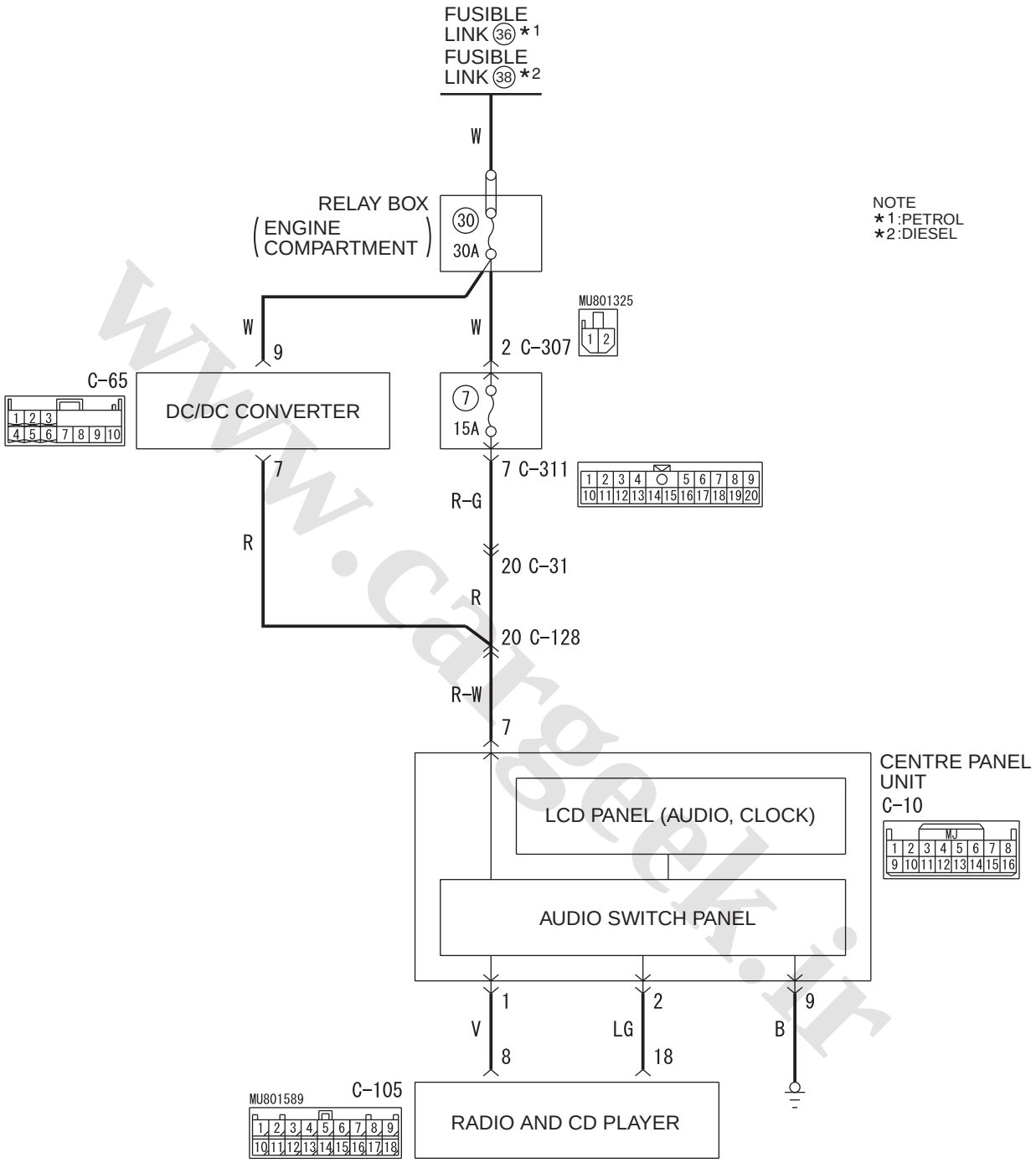

Wire colour code
B : Black LG : Light green G : Green L : Blue W : White Y : Yellow SB : Sky blue
BR : Brown O : Orange GR : Grey R : Red P : Pink V : Violet PU : Purple SI : Silver WDH54E028A

www.cargeek.ir

www.CarGeek.ir

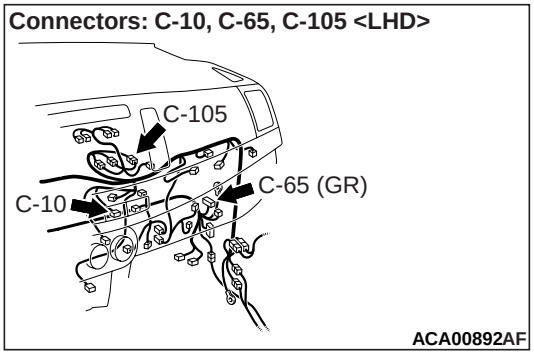

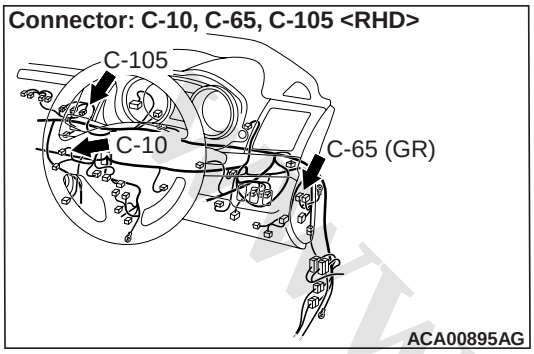

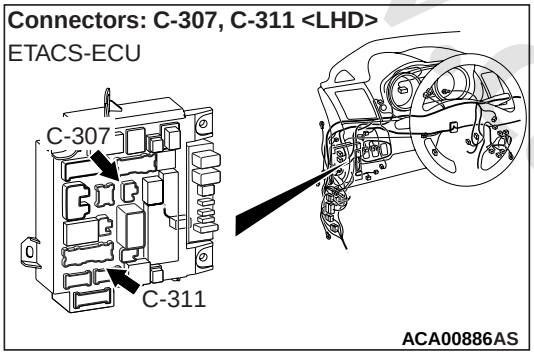

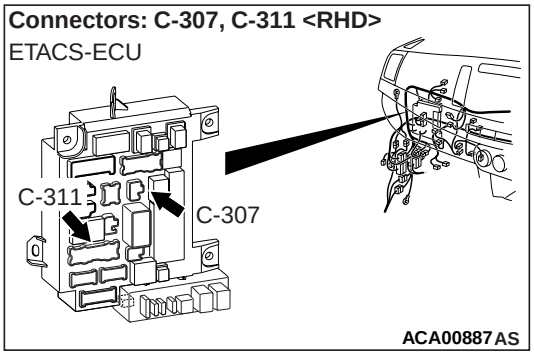

COMMENTS ON TROUBLE SYMPTOM

When the radio and CD player does not operate normally by operating the audio control unit of the centre panel unit, the radio and CD player, centre panel unit, or the power supply circuit system of centre panel unit may be faulty.

PROBABLE CAUSES

- Malfunction of radio and CD player
- Malfunction of centre panel unit
- Malfunction of DC/DC converter
- Damaged harness wires and connectors

DIAGNOSIS PROCEDURE

STEP 1. Connector check: C-10 centre panel unit connector

Q: Is the check result normal?
YES : Go to Step 2.
NO : Repair the defective connector.

STEP 2. Resistance measurement at C-10 centre panel unit connector

(1) Disconnect the connector, and measure at the wiring harness-side connector.
(2) Check the continuity between C-10 centre panel unit connector terminal No.9 and body earth.

OK: Continuity exists (2 Ω or less)

Q: Is the check result normal?
YES : Go to Step 4.
NO : Go to Step 3.

STEP 3. Check the wiring harness between C-10 centre panel unit connector terminal No.9 and body earth.

- Check the earth wire for open circuit.

Q: Is the check result normal?
YES : The trouble can be an intermittent malfunction (Refer to GROUP 00 – How to use Troubleshooting/inspection Service Points – How to Cope with Intermittent Malfunction).
NO : Repair the wiring harness.

STEP 4. Voltage measurement at C-10 centre panel unit connector.

(1) Disconnect the connector, and measure at the wiring harness-side connector.
(2) Measure the voltage between C-10 centre panel unit connector terminal No.7 and body earth.

OK: System voltage

Q: Is the check result normal?
YES : Go to Step 11.
NO : Go to Step 5.

STEP 5. Connector check: C-65 DC/DC converter connector

Q: Is the check result normal?
YES : Go to Step 6.
NO : Repair the defective connector.

www.cargeek.ir

www.CarGeek.ir

STEP 6. Voltage measurement at C-65 DC/DC converter connector.

(1) Disconnect C-65 DC/DC converter connector, and measure at the wiring harness side.
(2) Measure the voltage between terminal No.9 and body earth.

OK: System voltage

Q: Is the check result normal?
YES : Go to Step 7.
NO : Go to Step 9.

STEP 7. Check the DC/DC converter.

Check the continuity of the DC/DC converter (Refer to).

Q: Is the check result normal?
YES : Go to Step 8.
NO : Replace the DC/DC converter.

STEP 8. Check the wiring harness between C-65 DC/DC converter connector terminal No.7 and C-10 centre panel unit connector terminal No. 7.

- Check the power supply line for open circuit and short circuit.

NOTE: Prior to the wiring harness inspection, check intermediate C-128 connector, and repair if necessary.

Q: Is the check result normal?
YES : Go to Step 10.
NO : Repair the wiring harness.

STEP 9. Check the wiring harness between C-65 DC/DC converter terminal No.9 and fusible link (36) <Petrol> or (38) <Diesel>.

- Check the power supply line for open circuit and short circuit.

Q: Is the check result normal?
YES : The trouble can be an intermittent malfunction (Refer to GROUP 00, How to use Troubleshooting/inspection Service Points, How to Cope with Intermittent Malfunction).
NO : Repair the wiring harness.

STEP 10. Check the wiring harness between C-10 centre panel unit connector terminal No.7 and fusible link (36) <Petrol> or (38) <Diesel>

- Check the power supply line (battery power supply) for open circuit and short circuit.

NOTE: Prior to the wiring harness inspection, check intermediate C-31, C-128 connector and ETACS-ECU connector C-307 and C-311, and repair if necessary.

Q: Is the check result normal?
YES : The trouble can be an intermittent malfunction (Refer to GROUP 00, How to use Troubleshooting/inspection Service Points, How to Cope with Intermittent Malfunction).
NO : Repair the wiring harness.

STEP 11. Connector check: C-105 radio and CD player connector

Q: Is the check result normal?
YES : Go to Step 12.
NO : Repair the defective connector.

STEP 12. Check the wiring harness between C-105 radio and CD player connector terminal No.8, 18 and C-10 centre panel unit connector terminal No.1, 2.

- Check the communication lines for open circuit and short circuit.

Q: Is the check result normal?
YES : Go to Step 13.
NO : Repair the wiring harness.

STEP 13. Replace the centre panel unit temporarily, and check the trouble symptom.

Replace the centre panel unit temporarily, and check that the audio works normally.

Q: Is the check result normal?
YES : Replace the centre panel unit.
NO : Replace the radio and CD player.

www.cargeek.ir

www.CarGeek.ir

Inspection Procedure 5: Audio illuminations does not work normally.

⚠ CAUTION

Before replacing the radio and CD player, ensure that the power supply circuit, the earth circuit and the communication circuit are normal.

Centre Panel Unit Communication Circuit

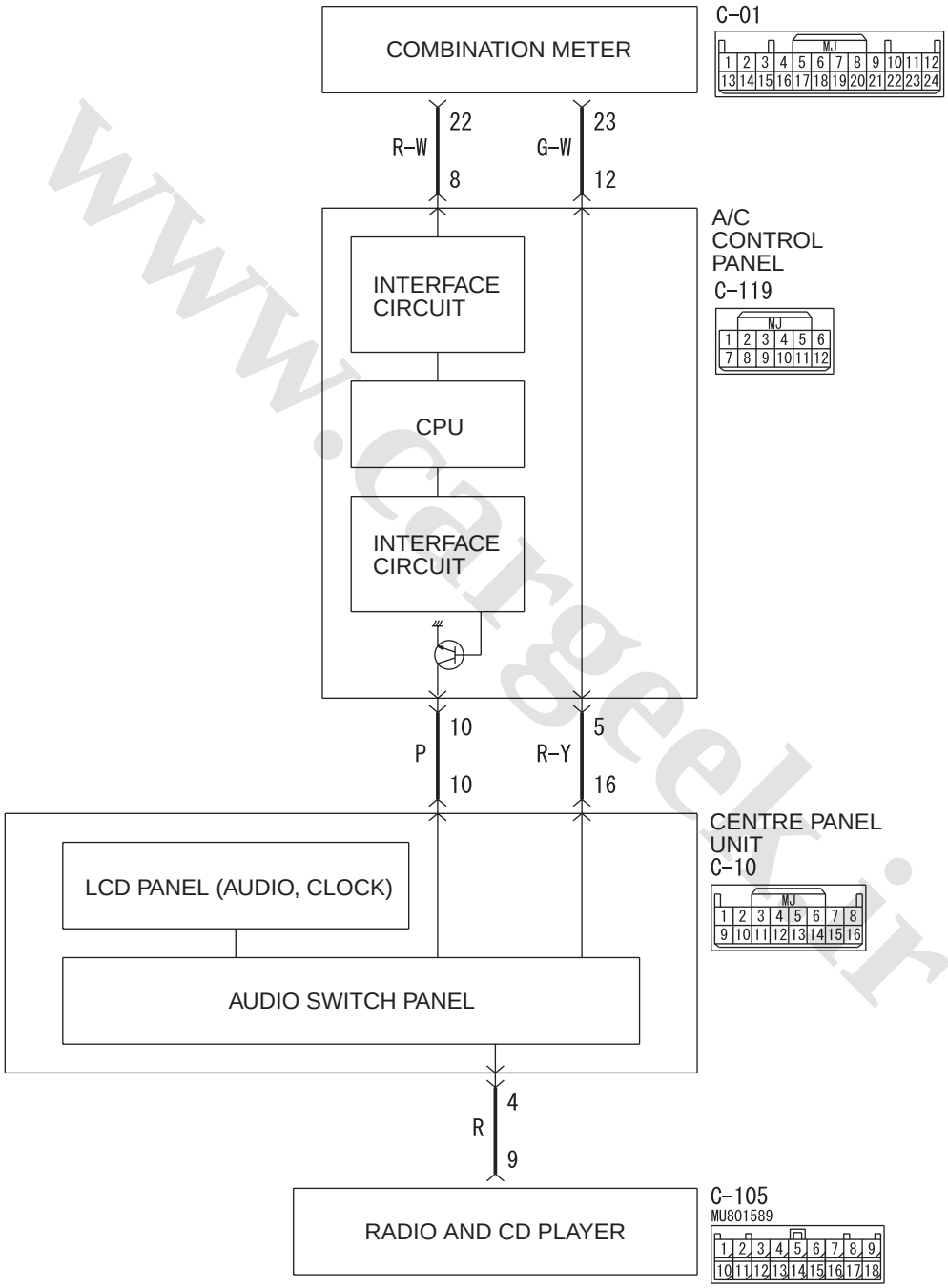

Wire colour code
B : Black LG : Light green G : Green L : Blue W : White Y : Yellow SB : Sky blue
BR : Brown O : Orange GR : Grey R : Red P : Pink V : Violet PU : Purple SI : Silver

WBH54E049A

www.cargeek.ir

www.CarGeek.ir

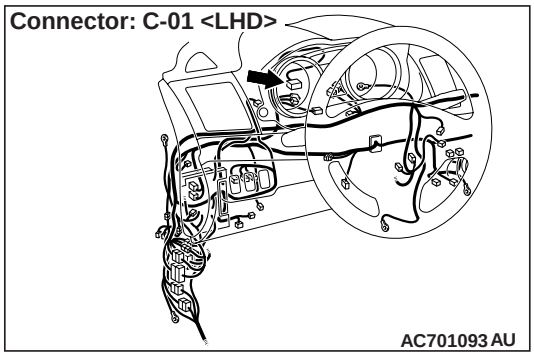

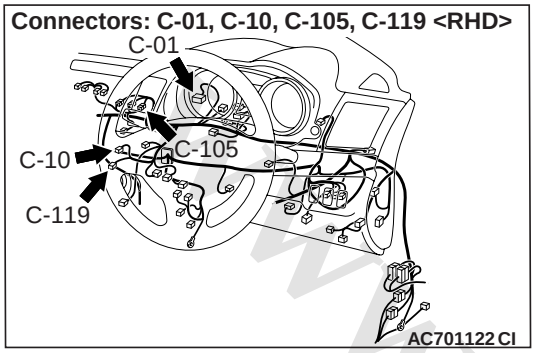

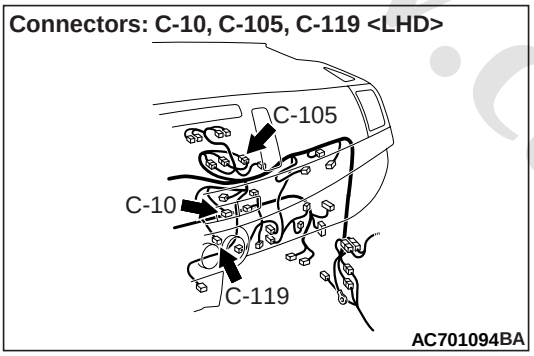

OPERATION

- When the position lamp is illuminated, the audio illumination is switched to the nighttime illumination.
- When the brightness is adjusted using the combination meter rheostat switch, the audio illumination brightness is also adjusted.

COMMENTS ON TROUBLE SYMPTOM

The centre panel unit, radio and CD player, combination meter, or communication line from the centre panel unit to the radio and CD player or to the combination meter may have a problem.

PROBABLE CAUSES

- Malfunction of combination meter
- Malfunctions of centre panel unit
- Malfunctions of radio and CD player
- Damaged harness wires and connectors

DIAGNOSIS PROCEDURE

STEP 1. Operation check of the centre panel unit

Operate the audio control switch of the centre panel unit, and check if the audio operates normally.

Q: Is the check result normal?
YES : Go to Step 2.
NO : Refer to Inspection Procedure 4 "The audio does not operate normally by operating the audio control unit of the centre panel unit." .

STEP 2. Check the combination meter.

Check whether the combination meter works normally.

Q: Is the check result normal?
YES : Go to Step 3.
NO : Diagnose the combination meter (Refer to).

STEP 3. M.U.T.-III other system diagnosis code

Check if diagnosis code is set to the combination meter.

Q: Is the diagnosis code set?
YES : Diagnose the combination meter (Refer to).
NO : Go to Step 4.

STEP 4. Connector check: C-01 combination meter connector, C-10 centre panel unit connector

Q: Is the check result normal?
YES : Go to Step 5.
NO : Repair the connector concerned.

STEP 5. Check the wiring harness between C-01 combination meter connector terminal No.23 and C-10 centre panel unit connector terminal No.16.

NOTE: Prior to the wiring harness inspection, check A/C control panel connector C-119, and repair if necessary.

- Check the communication lines for open circuit and short circuit.

Q: Is the check result normal?
YES : Go to Step 6.
NO : Repair the wiring harness.

STEP 6. Connector check: C-119 A/C control panel connector

Q: Is the check result normal?
YES : Go to Step 7.
NO : Repair the connector concerned.

www.cargeek.ir

www.CarGeek.ir

STEP 7. Check the wiring harness between C-01 combination meter connector terminal No. 22 and C-119 A/C control panel connector terminal No.8.

- Check the communication lines for open circuit and short circuit.

Q: Is the check result normal?
YES : Go to Step 8.
NO : Repair the wiring harness.

STEP 8. Check the wiring harness between C-10 centre panel unit connector terminal No.10 and C-119 A/C control panel connector terminal No.10.

- Check the communication lines for open circuit and short circuit.

Q: Is the check result normal?
YES : Go to Step 9.
NO : Repair the wiring harness.

STEP 9. Connector check: C-105 radio and CD player connector

Q: Is the check result normal?
YES : Go to Step 10.
NO : Repair the connector concerned.

STEP 10. Check the wiring harness between C-105 radio and CD player connector terminal No.9 and C-10 centre panel unit connector terminal No.4.

- Check the communication line for open circuit and short circuit.

Q: Is the check result normal?
YES : Go to Step 11.
NO : Repair the wiring harness.

STEP 11. Replace the A/C control panel connector temporarily, and check the trouble symptom.

Replace the A/C control panel connector temporarily, and check that the audio illumination works normally.

Q: Is the check result normal?
YES : Replace the A/C control panel connector.
NO : Go to Step 12.

STEP 12. Replace the centre panel unit temporarily, and check the trouble symptom.

Replace the centre panel unit temporarily, and check that the audio illumination works normally.

Q: Is the check result normal?
YES : Replace the centre panel unit.
NO : Replace the radio and CD player.

www.cargeek.ir

www.CarGeek.ir

Inspection Procedure 6: The sound of audio adapter's input are not played.

⚠ CAUTION

Before replacing the radio and CD layer, ensure that the power supply circuit, the earth circuit and the communication circuit are normal.

Audio Adapter Communication Circuit

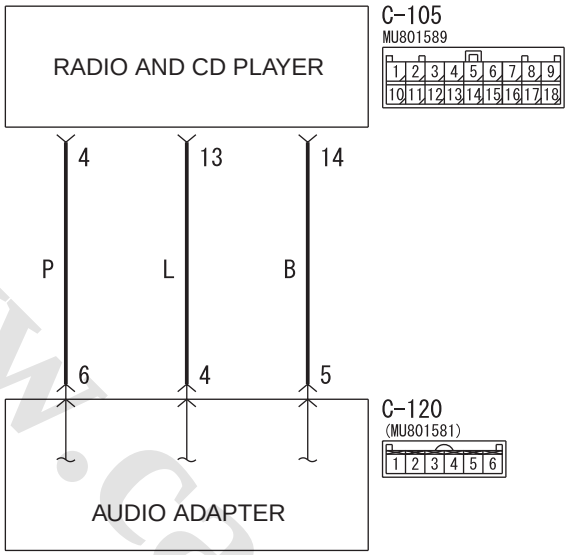

Wire colour code
B : Black LG : Light green G : Green L : Blue W : White Y : Yellow SB : Sky blue
BR : Brown O : Orange GR : Grey R : Red P : Pink V : Violet PU : Purple SI : Silver WDH54E029A

Connectors: C-105, C-120 <LHD>

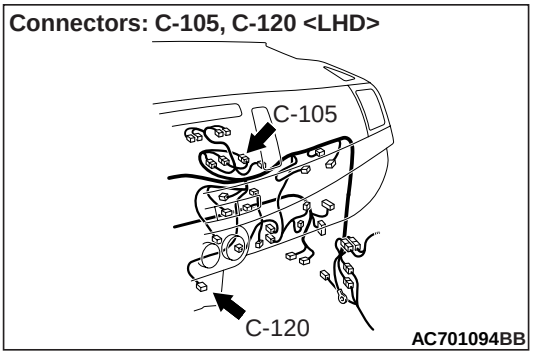

Connectors: C-105, C-120 <RHD>

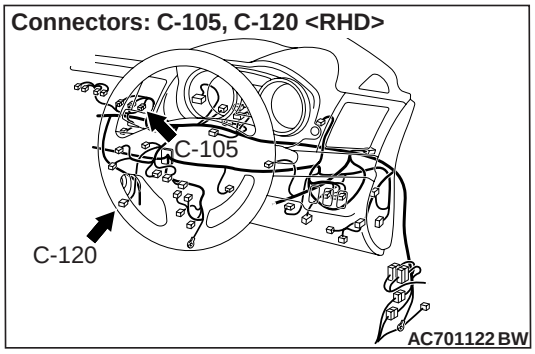

COMMENTS ON TROUBLE SYMPTOM

If the audio adapter's input sound is not output, the radio and CD player, the audio communication lines from the radio and CD player or audio adapter may have a problem.

NOTE: If there is an error with the input from USB adapter, troubleshoot the USB box or hands free-ECU. (Refer to <Vehicles with USB box> or <Vehicles with hands free-ECU>.)

PROBABLE CAUSES

- The audio adapter may be defective.
- The radio and CD player may be defective.
- Damaged harness wires and connectors

DIAGNOSIS

STEP 1. Check the radio and CD player operation.

Check if the radio and CD player work normally and the sound is output.

Q: Is the check result normal?

www.cargeek.ir

www.CarGeek.ir

YES : Go to Step 2.
NO : Troubleshoot the radio and CD player (Refer to).

Step 2. Check the external sounds input mode.
Check if the radio and CD player is switched to the external sounds input mode.

Q: Is the check result normal?
YES : Go to Step 3.
NO : Switch to the external sounds input mode.

STEP 3. Check the audio adapter.
Check if the audio adapter works normally.(Refer to)

Q: Is the check result normal?
YES : Go to Step 4.
NO : Replace the Audio adapter.

STEP 4. Connector check: C-120 audio adapter connector and C-105 radio and CD player connector

Q: Is the check result normal?
YES : Go to Step 5.
NO : Repair the defective connector.

STEP 5. Check the wiring harness between C-120 audio adapter connector terminal No. 5, 4, 6 and C-105 radio and CD player connector terminal No. 14, 13, 4.
- Check the communication lines for open circuit or short circuit.

Q: Is the check result normal?
YES : Replace the audio adapter, then go to Step 6.
NO : Repair the wiring harness.

STEP 6. Check of the troubles
Check that the external input is normal.

Q: Is the check result normal?
YES : The trouble can be an intermittent malfunction (Refer to GROUP 00 – How to use Troubleshooting/inspection Service Points – How to Cope with Intermittent Malfunction).
NO : Replace the radio and CD player.

www.cargeek.ir
www.cargeek.ir

www.CarGeek.ir

Inspection Procedure 7: Troubleshooting for noise.
Inspection Procedure 8: The sound volume decreases temporarily. The sound disappears at auto start by Auto Stop & Go (AS&G) System.<Vehicles with audio amplifier>

⚠ CAUTION

- **Check that no noise of external origin is present. Because the signal reception becomes poor indoors, check in the open air. If this check is neglected, the source of noise cannot be determined, resulting in a false recognition. Therefore, be sure to perform this check.**
- **When implementing the noise prevention, start the prevention from the object causing the strongest noise.**
- **Check the assembling condition and the connector connection of the radio and CD player.**
- **Check that the antenna and the radio and CD player are connected.**
- **Check the antenna and the antenna cable for damage.**

Noise types ( ) indicates the sound type.	**Situation**	**Cause**	**Countermeasure**
Ignition noise: (Crack, tapping, rattle, plash)	• When the engine speed is increased, the scratch noise becomes faster and the sound volume decreases. • When the ignition switch is turned to ACC, the noise disappears.	• Radiation noise caused mainly by the spark plug • Noise wraparound	Check the earth cable, and replace if necessary.
Wiper motor noise: (hum, distorted hum)	Synchronised with the wiper movement, and also becomes faster when wiper movement is sped up. When the wiper is stopped, the noise also stops.	Noise generated by the wiper motor operation	Check the wiper motor (Refer to GROUP 51 – Windshield Wiper, Inspection .), and replace if necessary.
Electric mirror noise: (hum, distorted hum)	The noise is generated when the electric mirror is operated.	Noise generated by the electric mirror motor operation	Check the electric mirror motor (Refer to GROUP 51 – Door Mirror, Inspection .), and replace if necessary.

www.cargeek.ir

www.CarGeek.ir

Noise types ( ) indicates the sound type.	Situation	Cause	Countermeasure
Static electricity (cracking, popping)	• No noise is generated when the vehicle comes to a complete stop. • Louder noise is generated when the clutch is disengaged.	The parts or wiring move for some reason, and cause the noise by contacting against the body metal parts.	Return the parts and wiring to the normal positions.
	Various types of noise are generated in various parts of the body.	Caused by the looseness between the body and the hood, trunk lid, bumper, exhaust pipe and muffler, suspension, or others.	Securely tighten the mounting bolts of each part.
Noise from other electrical equipment	–	The noise may be generated when the electrical equipment become old.	Repair or replace the electrical equipment.
No noise is generated, but the sound volume decreases temporarily at auto start by Auto Stop & Go (AS&G) System. The sound disappears.<Vehicles with audio amplifier>	• The sound volume decreases at auto start. The sound disappears. • There is no abnormality at other than the auto start. *NOTE: If the radio and CD player is not reset at the auto start, the radio and CD player and the audio amplifier are not defective.*	The battery voltage is low.	Diagnose the battery of the AS&G system, and replace the battery if necessary. (Refer to GROUP 17 – Auto Stop & Go (AS&G) System – Troubleshooting <Petrol> or <Diesel>.)

ON-VEHICLE SERVICE

ADJUSTMENT OF VOLUME AND SOUND QUALITY AUTOMATIC CORRECTION FUNCTION

M1544014200248

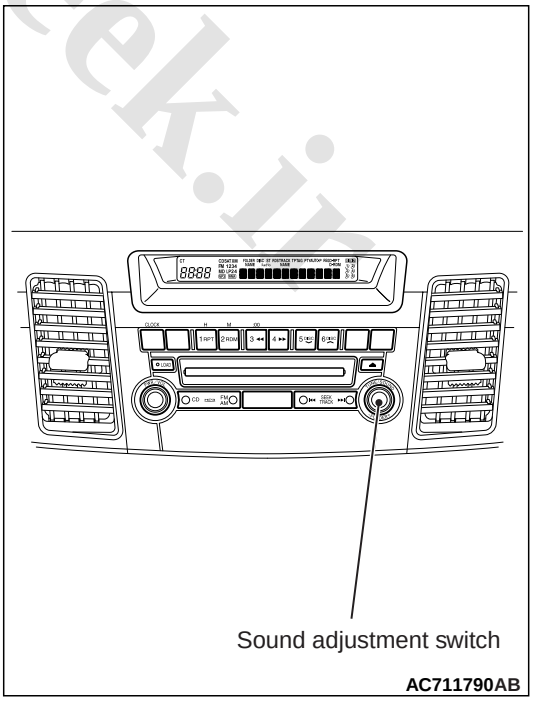

www.cargeek.ir

www.CarGeek.ir

When the following operations are performed with the audio power ON, the sound volume during driving and the ON/OFF of sound quality automatic correction function are switched.

1. Press and hold (approximately 2 seconds) the sound adjustment switch.
2. Press the sound adjustment switch once (approximately 1.5 seconds or less) to switch to the SCV setting screen.
3. SCV ON (when the automatic correction function is ON) or SCV OFF (when the automatic correction function is OFF) is displayed.
4. Turn the sound adjustment switch knob to switch between SCV ON and OFF.
5. Press the sound adjustment switch or leave as it is for 10 seconds or more.
6. Go back to the audio normal screen.

SERVICE DATA

M1544014100252

Item No.	Check item (M.U.T.-III display)	Check condition	Normal condition
1	RADIO remoto SW (SEEK-)	When the steering wheel audio remote control switch's "CH down" switch is pushed	ON
2	RADIO remoto SW (SEEK+)	When the steering wheel audio remote control switch's "CH up" switch is pushed	ON
3	RADIO remoto SW (MODE)	When the steering wheel audio remote control switch's "Mode" switch is pushed	ON
4	RADIO remoto SW (VOL-)	When the steering wheel audio remote control switch's "VOL down" switch is pushed	ON
5	RADIO remoto SW (VOL+)	When the steering wheel audio remote control switch's "VOL up" switch is pushed	ON
10	VR switch	When the steering wheel voice control switch's "Speech switch" switch is pushed	ON
11	On hook switch	When the steering wheel voice control switch's "Hang-up switch" switch is pushed	ON
13	Off hook switch	When the steering wheel voice control switch's "Pick-up switch" is pushed	ON

www.cargeek.ir

www.CarGeek.ir

REMOVAL AND INSTALLATION

M1544010900621

RADIO AND CD PLAYER

NOTE: When the radio and CD player are replaced, always turn the ignition switch to the ON position once and then carry out the operation check.

Pre-removal operation	Post-installation operation
• Removal of instrument centre panel (Refer to GROUP 52A – Instrument Centre Panel assembly).	• Installation of instrument centre panel (Refer to GROUP 52A – Instrument Centre Panel assembly).

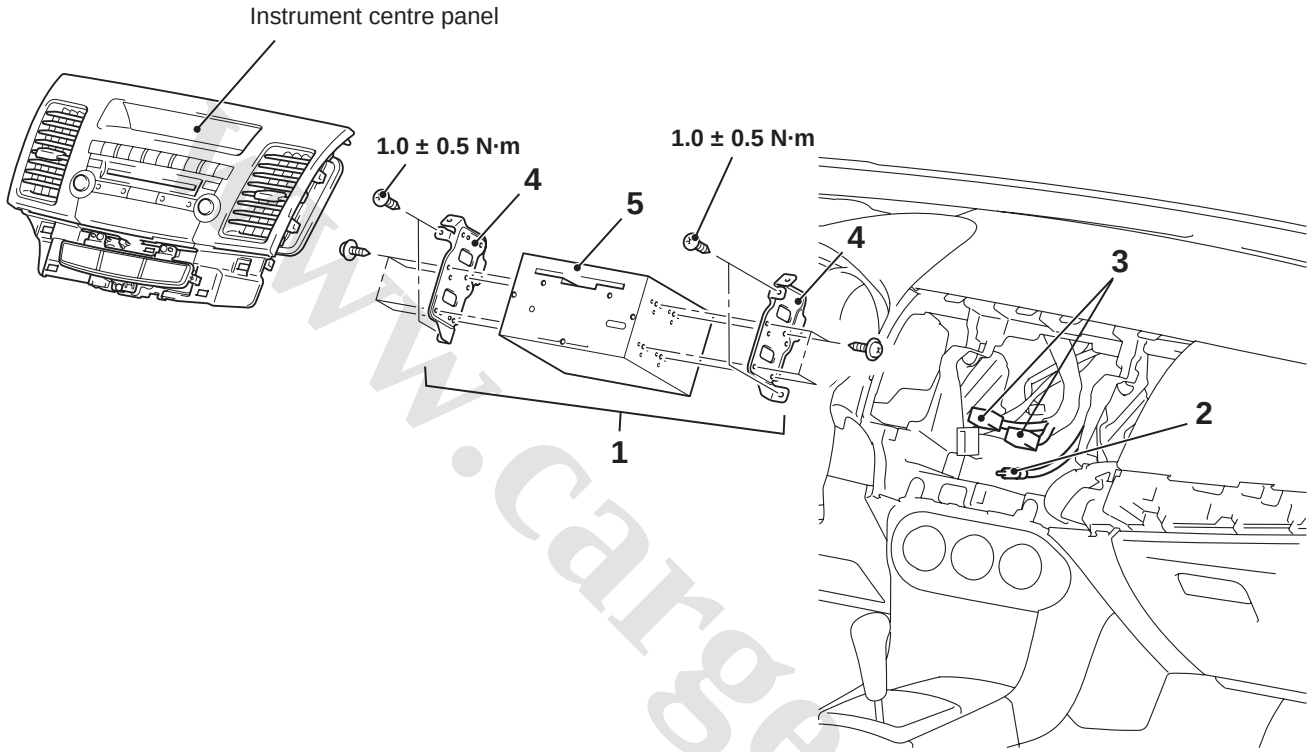

AC801901AB

Removal Steps

1. Radio and CD player/Audio equip bracket
2. Connector connection to radio and CD player (Antenna feeder)

Removal Steps (Continued)

3. Connector connection to radio and CD player
4. Audio equip bracket
5. Radio and CD player

www.cargeek.ir

www.CarGeek.ir

AUDIO ADAPTER

Pre-removal operation	Post-installation operation
• Removal of instrument console box (Refer to GROUP 52A – Instrument Centre Panel assembly).	• Installation of instrument console box (Refer to GROUP 52A – Instrument Centre Panel assembly).

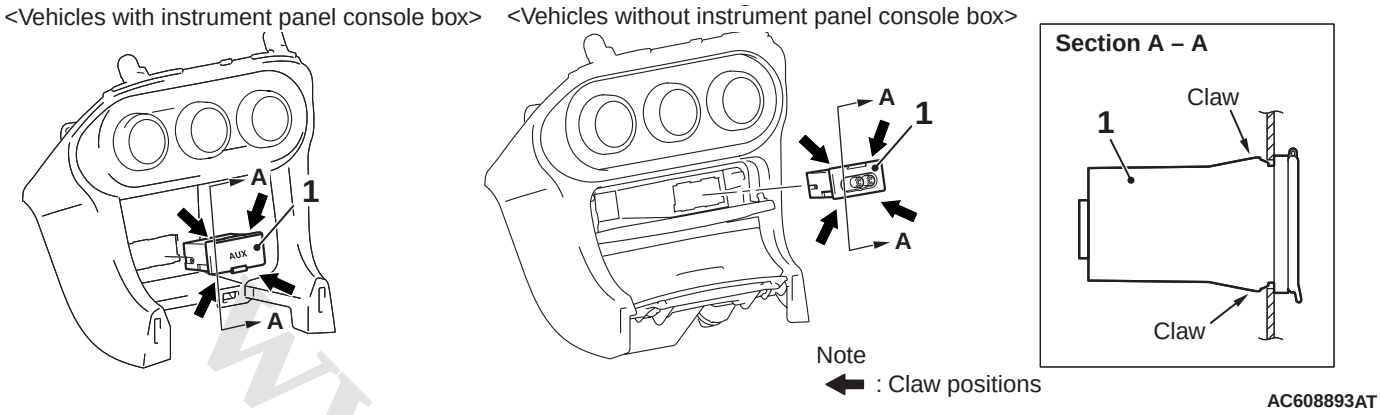

Removal Step

1. Audio adapter

INSPECTION

AUDIO ADAPTER INSPECTION

M1544019000012

1. Remove the audio adapter.(Refer to)
2. Check that the continuity exists between the pin jack of audio adapter and terminals.

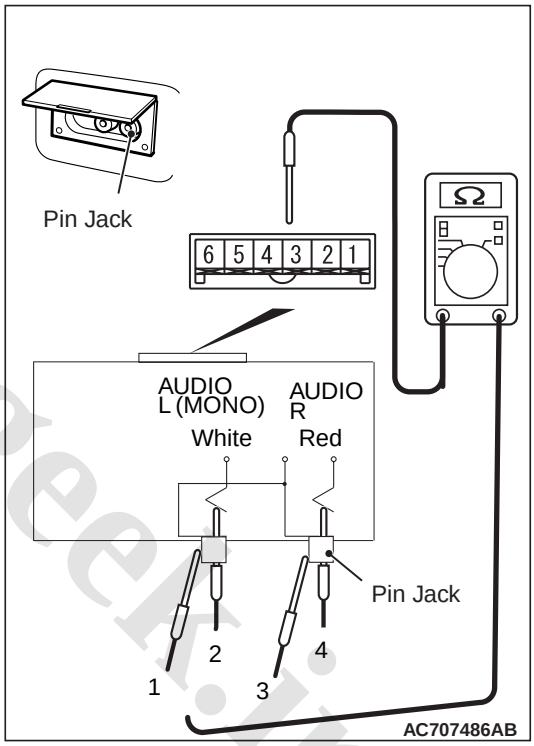

The connection position of pin jack side circuit tester	Terminal number	Measurement value
1	5	Continuity exists (2 Ω or less)
2	4	
3	5	
4	6	

www.cargeek.ir

www.CarGeek.ir

MITSUBISHI MULTI COMMUNICATION SYSTEM (MMCS)

SPECIAL TOOLS

M1540200300374

www.cargeek.ir

www.cargeek.ir

www.CarGeek.ir

Tool	Number	Name	Use
a 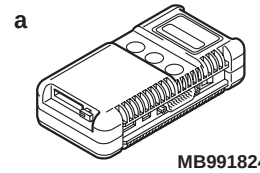 MB991824 b 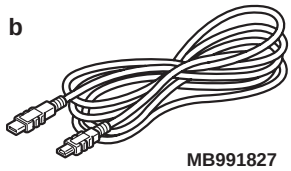 MB991827 c 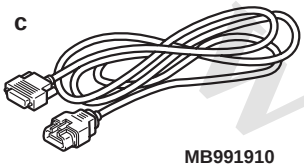 MB991910 d 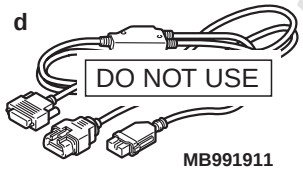 DO NOT USE MB991911 e 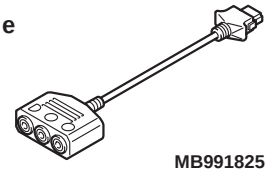 MB991825 f 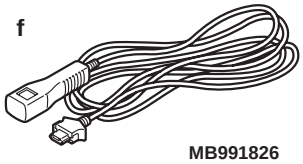 MB991826 MB991955	MB991955 a. MB991824 b. MB991827 c. MB991910 d. MB991911 e. MB991825 f. MB991826	M.U.T.-III sub-assembly a. Vehicle Communication Interface (V.C.I.) b. M.U.T.-III USB cable c. M.U.T.-III main harness A (Vehicles with CAN communication system) d. M.U.T.-III main harness B (Vehicles without CAN communication system) e. M.U.T.-III measure adapter f. M.U.T.-III trigger harness	⚠ CAUTION **For vehicles with CAN communication, use M.U.T.-III main harness A to send simulated vehicle speed. If you connect M.U.T.-III main harness B instead, the CAN communication does not function correctly.** CAN bus diagnostics or service data check.
a 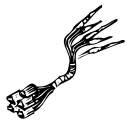 b 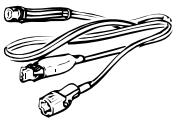 c 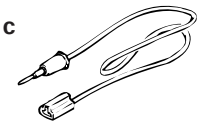 d DO NOT USE MB991223	MB991223 a. MB991219 b. MB991220 c. MB991221 d. MB991222	Harness set a. Check harness b. LED harness c. LED harness adapter d. Probe	Continuity check and voltage measurement at harness wire or connector a. For checking connector pin contact pressure b. For checking power supply circuit c. For checking power supply circuit d. For connecting a locally sourced tester

www.cargeek.ir

www.CarGeek.ir

Tool	Number	Name	Use
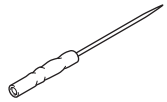 MB992006	MB992006	Extra fine probe	Continuity check and voltage measurement at harness wire or connector

TROUBLESHOOTING

STANDARD FLOW OF DIAGNOSTIC TROUBLESHOOTING

M1544004800595

Refer to GROUP 00 – Contents of troubleshooting .

DIAGNOSIS FUNCTION <VEHICLES FOR RUSSIA>

M1546001600554

HOW TO READ DIAGNOSIS CODE

GROUP 00 – Diagnosis function .

HOW TO ERASE DIAGNOSIS CODE

GROUP 00 – Diagnosis function .

CHECK OF FREEZE FRAME DATA

The freeze frame data can be checked by using M.U.T.-III.

When detecting fault and storing the diagnosis code, the ECU connected to CAN bus line obtains the data before the determination of the diagnosis code and the data when the diagnosis code is determined, and then stores the ECU status of that time. By analysing each data from M.U.T.-III, the troubleshooting can be performed more efficiently. The displayed items are as the table below.

Display item list

Item No.	Item name	Data item	Unit
1	Odometer	Total driving distance after the diagnosis code is generated	km
2	Ignition cycle	Number of times the ignition switch is turned "ON" or "LOCK (OFF)" after the past failure transition	Number of counts is displayed.
4	Accumulated minute	Cumulative time for current malfunction of diagnosis code	min

PRECAUTIONS ON SERVICING MMCS

M1546003000127

PRIOR TO DISCONNECTING THE VEHICLE BATTERY

The MMCS stores a lot of information which your customer registers in its memory. All of this information will be cleared when the battery terminals are disconnected. Therefore, the preset channels must be stored before the vehicle battery is disconnected. Vehicle's current position and destinations must be stored if the vehicle battery remains disconnected for long periods.

DIAGNOSIS TIPS CONCERNING THE ENTIRE SYSTEM

1. If at least two system functions are defective at the same time, it is possible that communication between the system components is abnormal. Check the system using the communication and wire connection check in the service mode.
2. If an error is displayed, check that relevant wiring harness connectors are engaged correctly. If a failure is found, repair the connectors and check the trouble symptom again.
3. If the wiring harness connectors are engaged correctly, check the wiring harness. If the wiring harness is in good condition, replace relevant component(s). Now the error code and the service mode data must be stored.

NOTE: If a system communication related failure is suspected, diagnose the system.

www.cargeek.ir

www.CarGeek.ir

DIAGNOSIS TIPS CONCERNING THE NAVIGATION FUNCTION

1. The precision of the GPS positioning is limited due to its operation principles. So, some of customer reports do not mean that the system is defective.

Prior to troubleshooting, interrogate your customer about how the navigation system is used and where he/she drives. If you determine that the system is OK, explain to your customer about how the system works and how the customer should operate it.

2. If the system is not OK, diagnose the system according to the trouble symptom chart.

ERROR MESSAGE

M1546023500287

When the multivision display detects its own unintentional operation or malfunction in the loaded disc, it displays the following error messages.

ERROR MESSAGE SAMPLE

<English>

The unit too hot. Please wait...

<Russian>

Слишком высокая температура.
Пожалуйста, подождите.

(The unit is too hot.
Please wait...)

AC804184AB

Error contents	Cause	Action
Malfunction of multivision display by high temperature	The inside temperature of the multivision display is 75°C or more.	Wait until the temperature drops to the operable temperature. After the temperature drops, the error message display is terminated, and then returns to the screen before the error message display.

ERROR MESSAGE SAMPLE

<English>

The unit too cold Please wait...

<Russian>

Слишком низкая температура.
Пожалуйста, подождите.

(The unit is too cold.
Please wait...)

AC804184AC

Error contents	Cause	Action
Malfunction of multivision display by low temperature	The inside temperature of the multivision display is –20°C or less.	Wait until the temperature rises to the operable temperature by working the air conditioner. After the temperature rises, the error message display is terminated, and the screen returns to the status before displaying the error message.

www.cargeek.ir

www.CarGeek.ir

ERROR MESSAGE SAMPLE

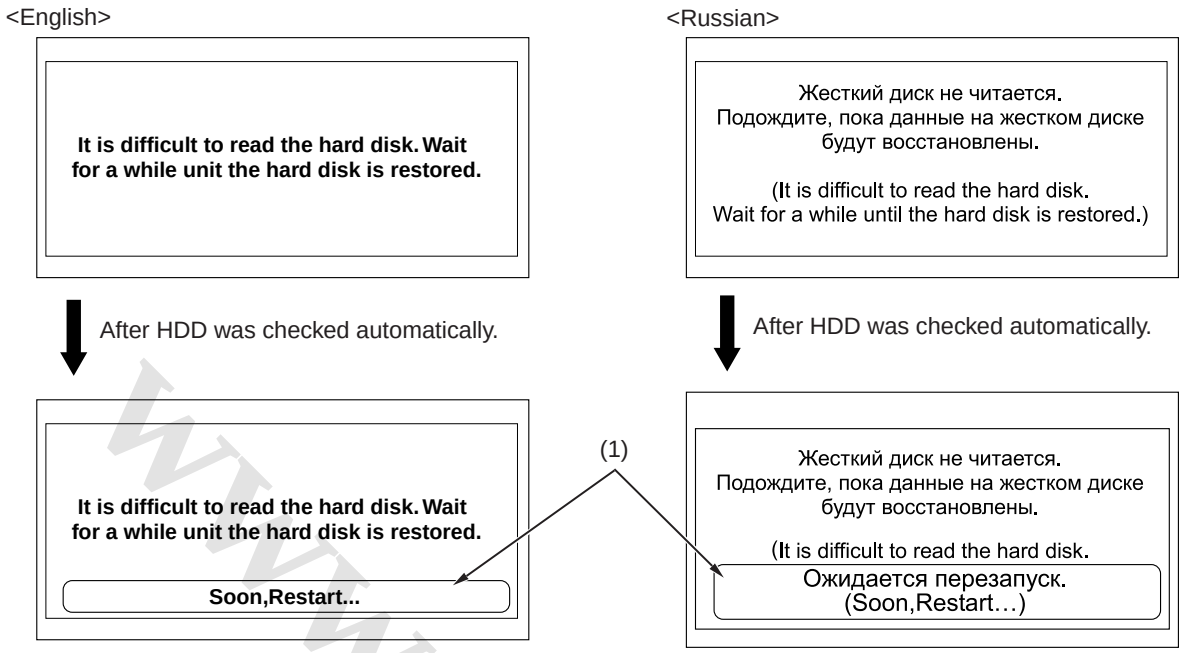

AC804210AC

Error contents	Cause	Action
Malfunction of HDD by vibration	Severe vibration is applied to the multivision display, and the reading of the HDD data is prohibited.	When the multivision display confirms the HDD data reading availability, it restarts automatically. Check if the multivision display is securely installed to the vehicle body.
HDD Partition Error	System malfunction occurs to the HDD inside the multivision display.	The multivision display checks HDD automatically. (1) is displayed after the completion of the check. Select (1) to restart the multivision display. If it does not restart, turn the ignition switch to the OFF position to turn off the power supply, and then turn the ignition switch to the ON position to restart. After the restart, check that the OK is displayed for the HDD Drive in the "Network/Connect Line Check" of the MMCS service mode. If not, replace the multivision display.

ERROR MESSAGE SAMPLE

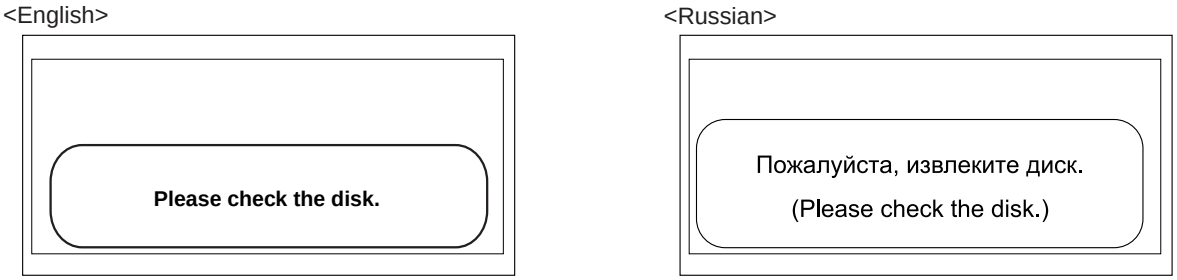

AC804184AK

www.cargeek.ir

www.CarGeek.ir

Error contents	Cause	Action
Disc type error	The specification of the disc used has a problem.	The disc used may have a problem. Check the disc for scratches or dirt. Also, perform the Inspection procedure 8 "CD/DVD cannot be Played" of the troubleshooting.

ERROR MESSAGE SAMPLE

<English>

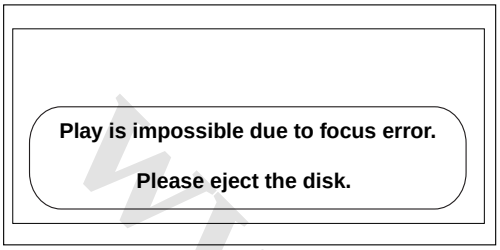

<Russian>

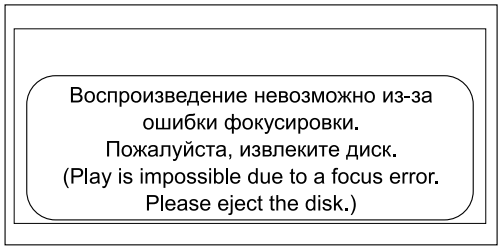

AC804184AG

Error contents	Cause	Action
Focus error	The disc used has scratches and dirt, and the data cannot be read.	The disc used may have a problem. Check the disc for scratches or dirt. Also, perform the Inspection procedure 8 "CD/DVD cannot be Played" of the troubleshooting.

ERROR MESSAGE SAMPLE

<English>

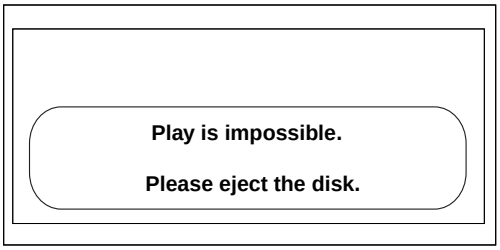

<Russian>

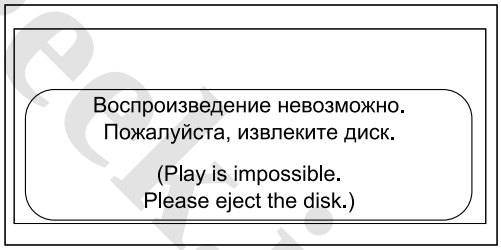

AC804184AE

Error contents	Cause	Action
Disc error	The data of the disc used has a malfunction, and the data cannot be read.	The disc used may have a problem. Check the disc for scratches or dirt. Also, perform the Inspection procedure 8 "CD/DVD cannot be Played" of the troubleshooting.
Seek error		
Servo startup error		
TOC read error		
DVD-Video Disc info error (Disc information cannot be read.)		

www.cargeek.ir

www.CarGeek.ir

ERROR MESSAGE SAMPLE

<English>

Play is impossible due to a Mechanism error.

<Russian>

Воспроизведение невозможно
из-за неисправности устройства.

(Play is impossible due to a Mechanism error.)

AC804184AJ

Error contents	Cause	Action
Power-on error	The DVD drive inside the multivision display has a malfunction.	Perform the Inspection procedure 8 "CD/DVD cannot be Played" of the troubleshooting.
Pickup operation error		
Mecha stack error		
Loading/eject error		

ERROR MESSAGE SAMPLE

<English>

The region code is incorrect.

Please eject the disk.

<Russian>

Неверый код сегмента
Пожалуйста, извлеките диск.
**(The region code is incorrect.
Please eject the disk.)**

AC804184AI

Error contents	Cause	Action
DVD-Video region code error	The region code of the DVD does not match the specification of the multivision display.	Replace with the DVD that matches the specification of the multivision display.

ERROR MESSAGE SAMPLE

<English>

The monitor panel is too hot.
Screen display has stopped to protect the liquid crystal panel.

Wait unit the monitor panel has cooled down.

<Russian>

Слишком высокая температура панели монитора.
Дисплей выключен для защиты ЖК-панели.
Подождите, пока не уменьшиться температура панели.

(The monitor panel is too hot.
Screen display has stopped to
protect the liquid crystal panel.
Wait until the monitor panel has cooled down.)

AC804184AH

www.cargeek.ir

www.CarGeek.ir

Error contents	Cause	Action
Monitor high temperature error	The inside temperature of the monitor is 95°C or more for 60 seconds or more.	The monitor turns OFF 5 seconds after the error message appears. Wait until the temperature of the monitor drops. The temperature drops, and then the multivision display returns automatically.

NOTE: "Environment" is not displayed on the "INFO" screen. Ambient temperature is not displayed on the environment screen. If atmospheric pressure or altitude is not displayed on the environment display, the CAN box unit may have a problem in the CAN communication with A/C-ECU or engine-ECU. Check if a diagnosis code is set in the CAN box unit. <Vehicles for RUSSIA>

SERVICE MODE

M1546016601003

HOW TO INITIATE THE SERVICE MODE

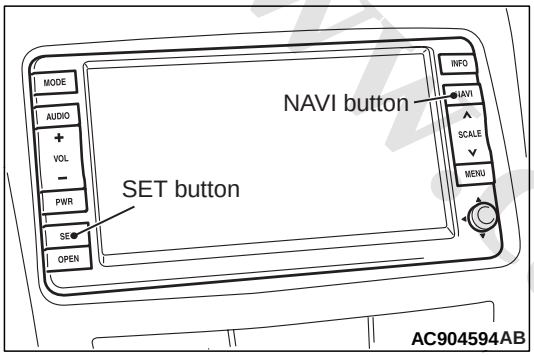

1. With the navigation system active, press and hold both the "NAVI" and "SET" buttons for 3.5 seconds.

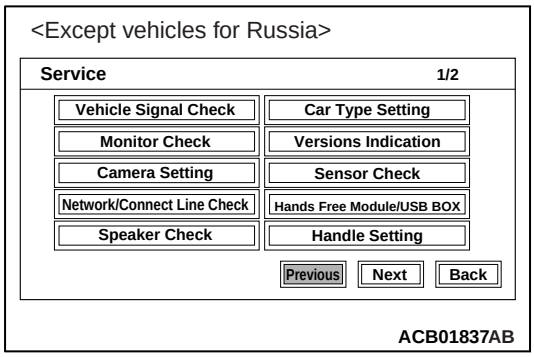

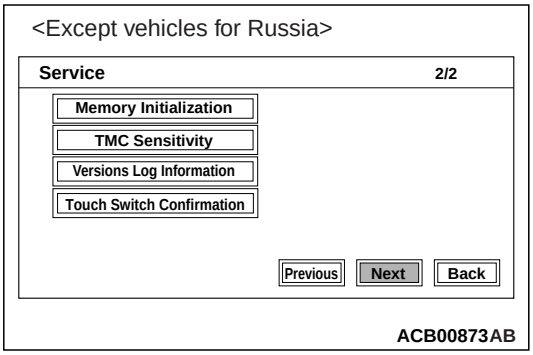

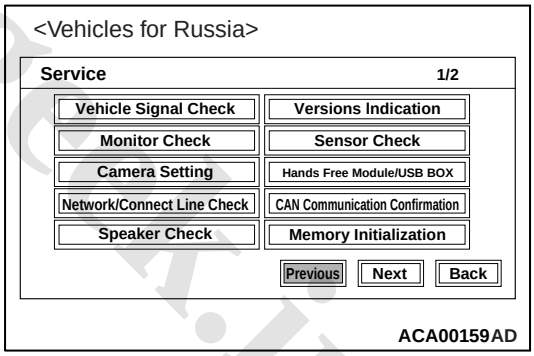

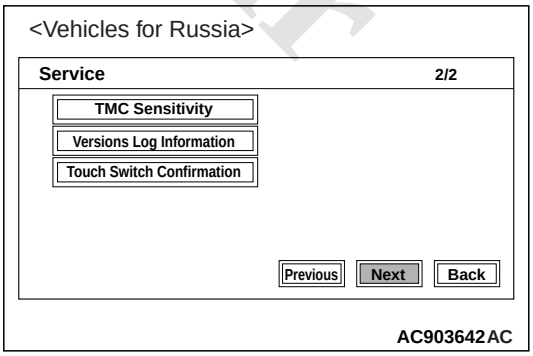

2. The service mode will be initiated. Then "Service" screen will be displayed.

www.cargeek.ir

www.CarGeek.ir

HOW TO TERMINATE THE SERVICE MODE

If the operations below are done, the service mode will be terminated.

- If "Back" button is selected on "Service" screen, the service mode will terminate and then return to the previous screen.
- If "NAVI" button is pressed with the service mode active, the service mode will terminate and change to the navigation screen.

SERVICE MODE ITEM

The following items can be checked or set in the service mode.

- Vehicle Signal Check
- Monitor Check
- Camera Setting
- Network/Connect Line Check
- Speaker Check
- Car Type Setting <Except vehicles for Russia>
- Versions Indication
- Sensor Check
- Hands Free Module <Vehicles with hands free-ECU>
- USB BOX <Vehicles with USB box>
- Handle Setting <Except vehicles for Russia>
- CAN communication Confirmation <Vehicles for Russia>
- Memory Initialisation
- TMC Sensitivity
- Version Log Information
- Touch Switch Confirmation

VEHICLE SIGNAL CHECK

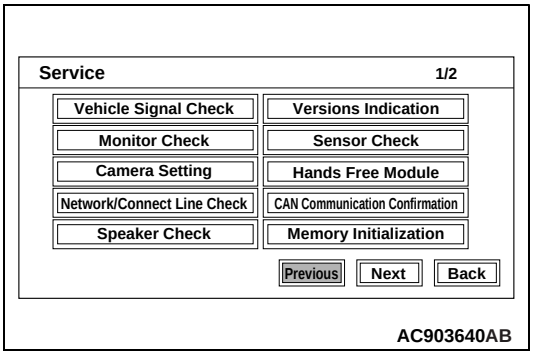

1. Select "Vehicle Signal Check" on "Service" screen.

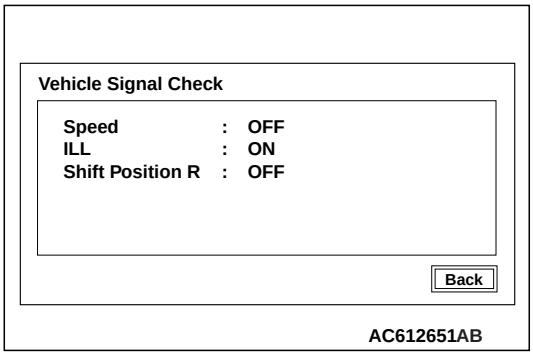

2. The check results will be displayed for the items below.
   - "Speed": "ON" when the vehicle speed is 6 km/h or more, and "OFF" when the vehicle speed is 4 km/h or less.
   - "ILL": "ON" when the lighting switch is on (head-lamp position), and "OFF" when they are off (except headlamp position).
   - "Shift Position R": "ON" when the selector lever is at R position, and "OFF" when it is at the other position.

MONITOR CHECK

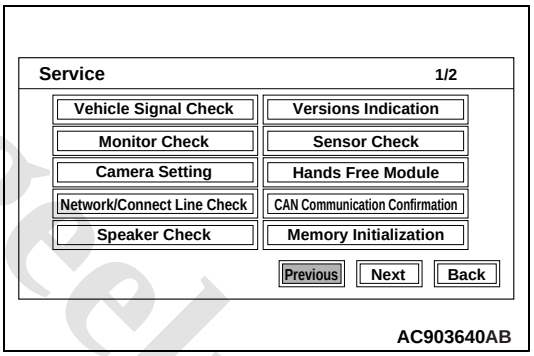

1. Select "Monitor Check" on "Service" screen.

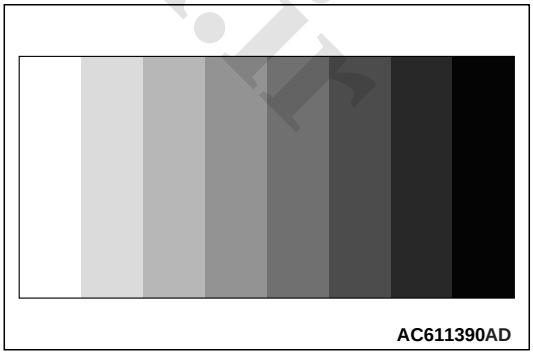

2. Eight colour bars will be displayed.

www.cargeek.ir

www.CarGeek.ir

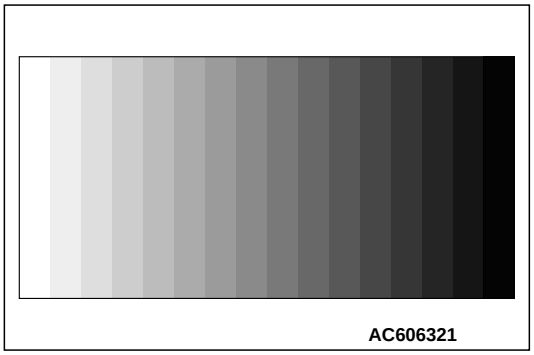

3. When "Enter" is pressed on the navigation unit joystick while the eight colour bars are shown, grey scale will be displayed with a 16-step gradation.

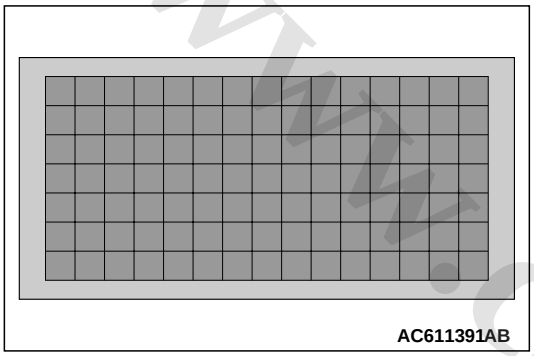

4. When "Enter" is pressed while the grey scale is shown with a 16-step gradation, a crosshatch pattern will be displayed (Each cell should be square).

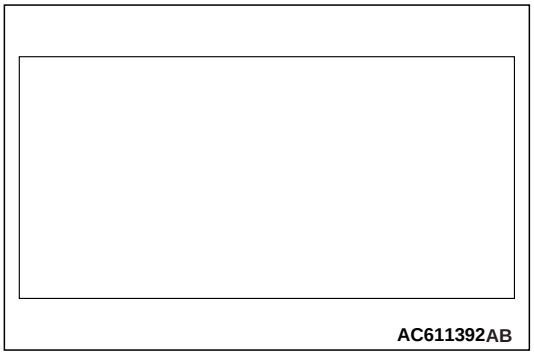

5. When "Enter" is pressed on the navigation unit joystick while the crosshatch pattern is shown, the screen will turn white.

6. When "Enter" is pressed on the navigation unit joystick while the screen is white, it will turn black.

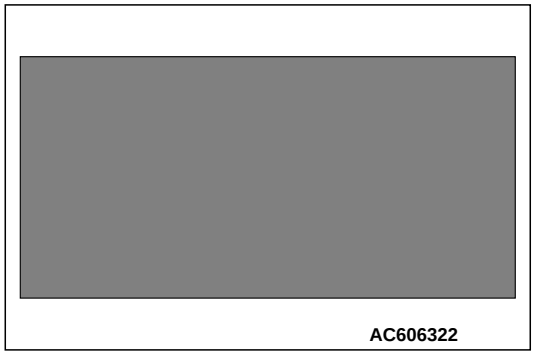

7. When "Enter" is pressed on the navigation unit joystick while the screen is black, the screen will turn red.

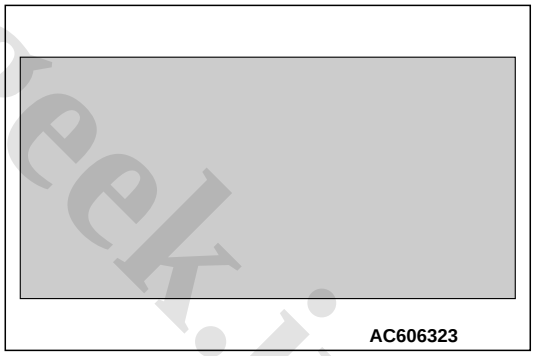

8. When "Enter" is pressed on the navigation unit joystick while the screen is red, it will turn green.

9. When "Enter" is pressed on the navigation unit joystick while the screen is green, it will turn blue.

www.cargeek.ir

www.CarGeek.ir

10.When "Enter" is pressed on the navigation unit joystick while the screen is green, it will return to the "Service" screen.

CAMERA SETTING

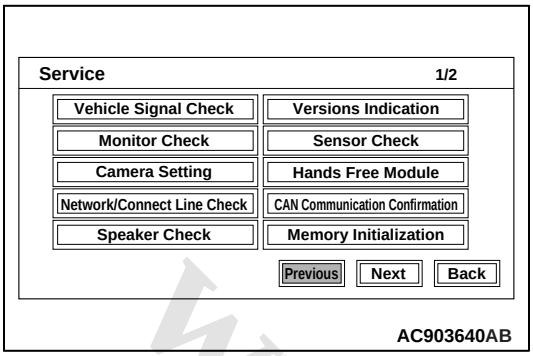

1. Select "Camera Setting" on "Service" screen.

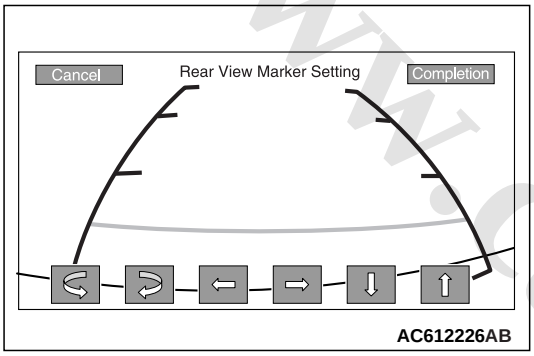

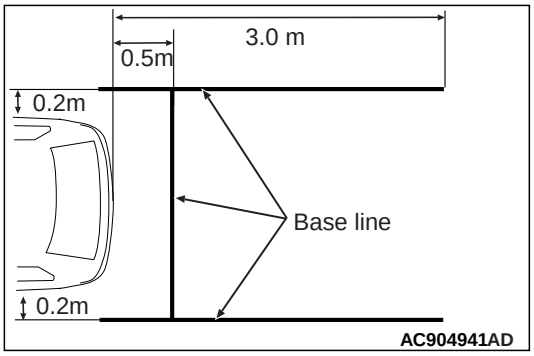

2. Draw base lines 0.5 m behind the vehicle and width +0.4 m (+0.2 m each for right and left) and align the guide line over the base lines.

NETWORK/CONNECT LINE CHECK

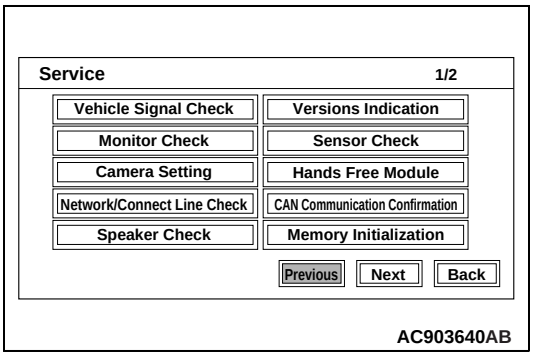

1. Select "Network/Connect Line Check" on "Service" screen.

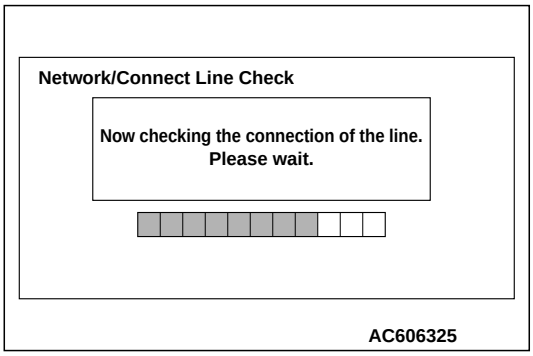

2. A network and connect line check will be initiated. The "Network/Connect Line Check" screen will display how the check is in progress.

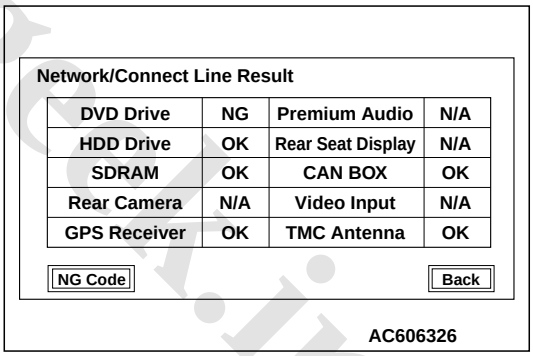

3. When the network and connect line check is finished, the screen will change to "Network/ Connect Line Result" to show the check results.

www.cargeek.ir

www.CarGeek.ir

NOTE:

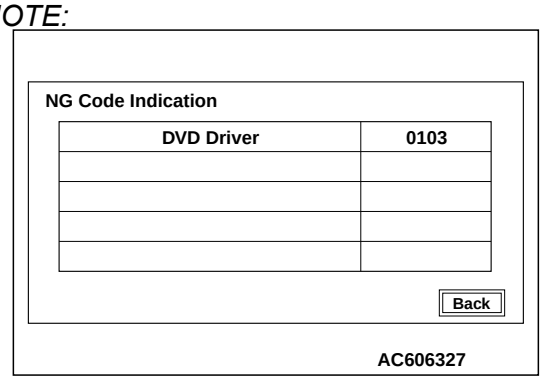

If there is "NG" or "N/A" as the check results, select "NG Code" on the "Network/Connect Line Result" screen. Then "NG code Indication" screen will show the NG code.

4. If "Back" is selected on "Network/Connect Line Result", the screen will return to "Service" screen.

SPEAKER CHECK

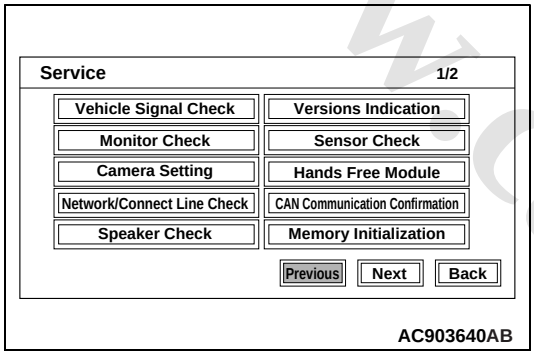

1. Select "Speaker Check" on "Service" screen.

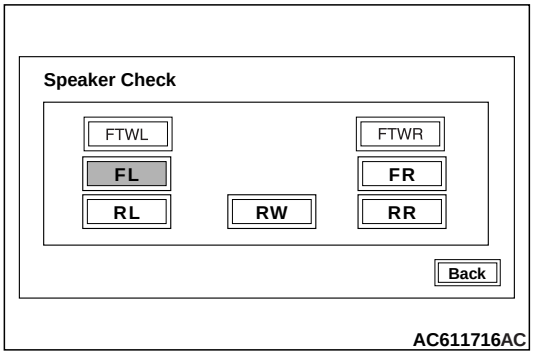

2. Select a speaker to be checked, and play test tone through the speaker.

NOTE:

- *[FTWL] front tweeter (LH), [FTWR] front tweeter (RH) and [RW] subwoofer are not displayed for vehicles with 6 speakers.*
- *By operating the volume key, the volume can be changed.*
- *During the test, only the selected speaker sounds. If "Back" is selected during the test, the test tone will disappear.*

CAR TYPE SETTING <EXCEPT VEHICLES FOR RUSSIA>

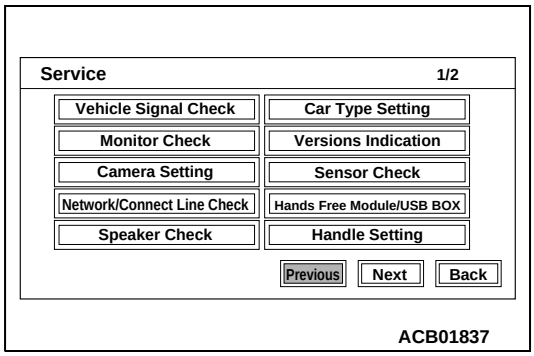

1. Select "Car Type Setting" on "Service" screen.

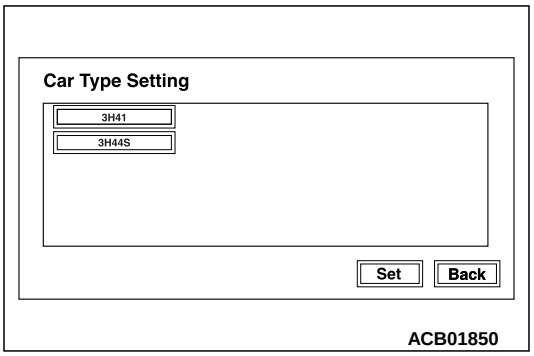

2. Check that it is set to "3H41" <LANCER> or "3H44S" <LANCER SPORTBACK>. If not, select "3H41" <LANCER> or "3H44S" <LANCER SPORTBACK>, and then choose "Set".

VERSIONS INDICATION

Displays versions indication (Loader, Application, Audio Microcomputer, Navi Sub Microcomputer, Map Data, Monitor, and CAN BOX <vehicles for Russia>).

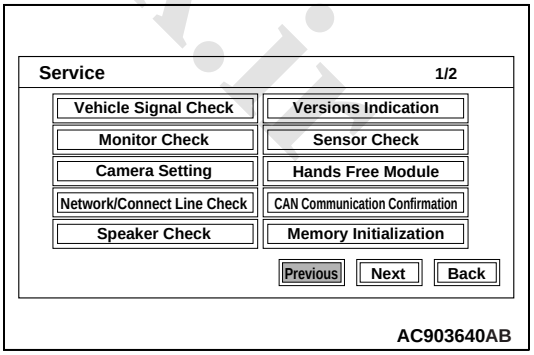

1. Select "Versions Indication" on "Service" screen.

www.cargeek.ir

www.CarGeek.ir

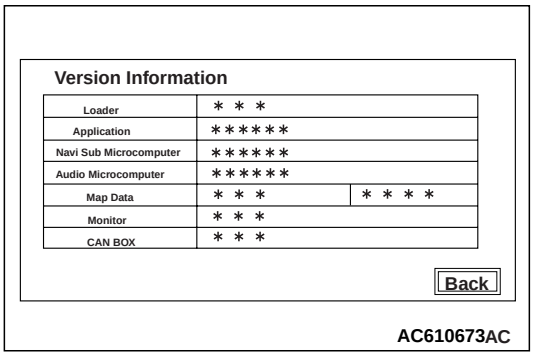

2. Versions indication is displayed.

SENSOR CHECK

The speed sensor and gyro sensor will be checked, depending on the vehicle conditions such as driving condition, stationary condition and travel direction change.

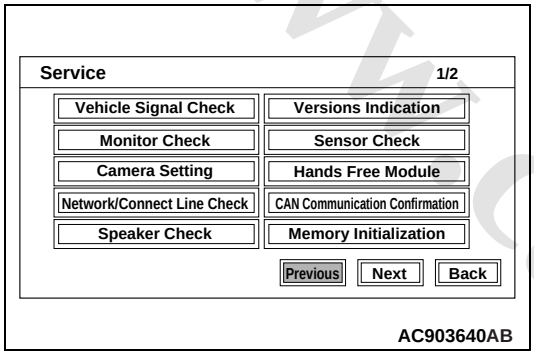

1. Select "Sensor Check" on "Service" screen.

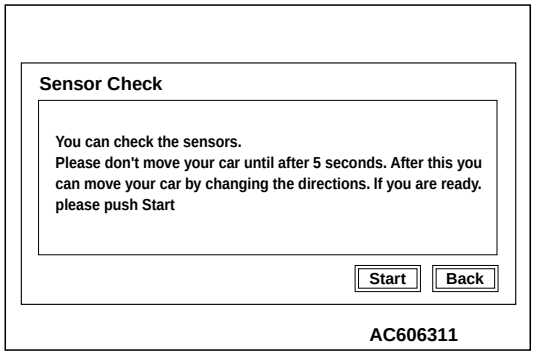

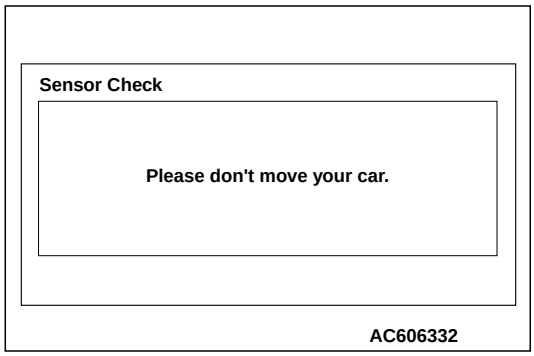

2. The sensor check with the vehicle stationary will be executed in accordance with the screen.

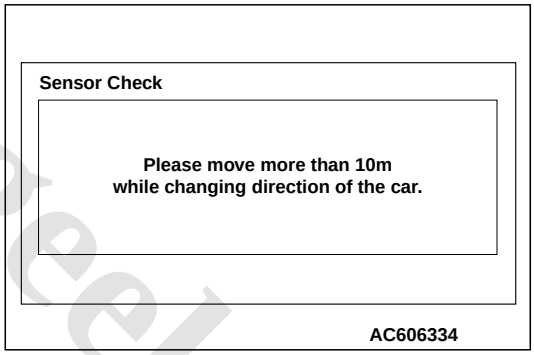

3. The sensor check with the vehicle in motion will be executed in accordance with the screen.

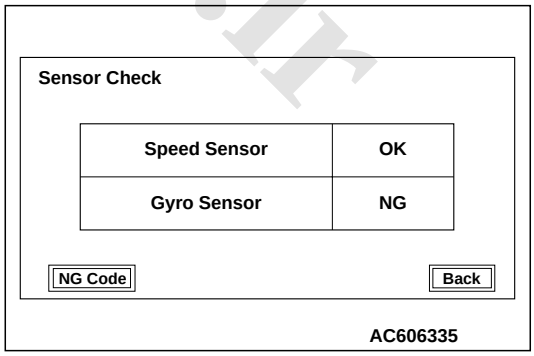

4. When the sensor checks are complete, the screen will display the check results.

www.cargeek.ir

www.CarGeek.ir

NOTE:

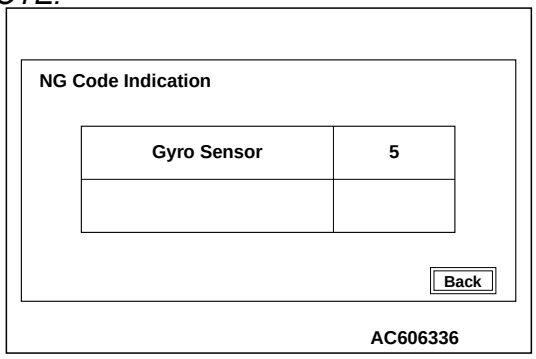

If there is "NG" or "N/A" as the check results, select "NG Code" on the "Sensor Check" screen. Then "NG code Indication" screen will show the NG code.

NG CODE REFERENCE TABLE FOR SENSOR CHECK

Sensor classification	NG Code No.	Error items
Gyro sensor	1	Offset error while the vehicle is stationary (lower limit error)
	2	Offset error while the vehicle is stationary (upper limit error)
	5	Output error during driving
Speed sensor	6	Output error while the vehicle is stationary

HANDS FREE MODULE <VEHICLES WITH HANDS FREE ECU>

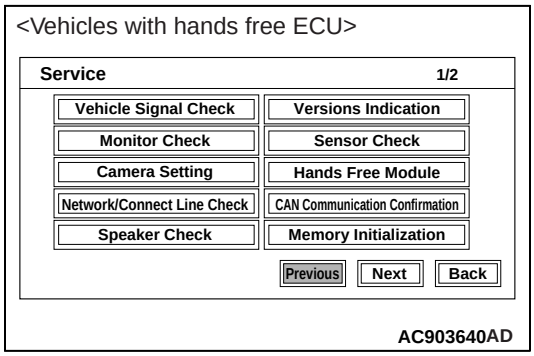

1. Select "Hands Free Module" on "Service" screen.

   NOTE: For item "Hands Free Module", refer or Hands Free ECU – Diagnosis Mode .)

USB BOX <VEHICLES WITH USB BOX>

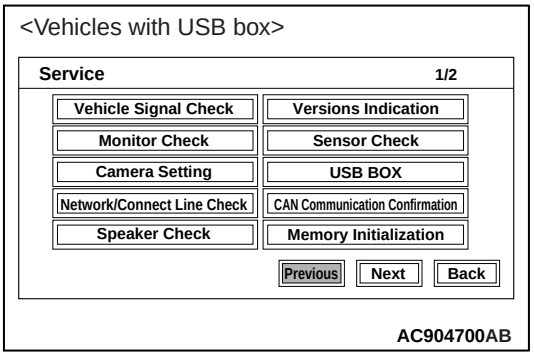

1. Select "USB BOX" on "Service" screen.

   NOTE: For item "USB BOX", refer or USB Box – Diagnosis Mode .)

HANDLE SETTING

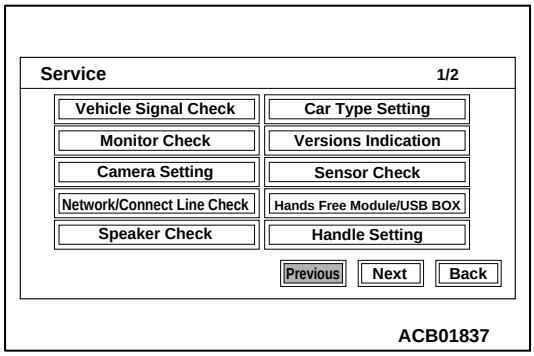

1. Select "Handle Setting" on "Service" screen.

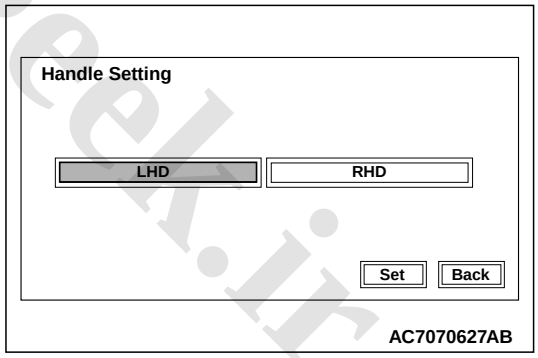

2. Select the currently-set handle to display.
3. To change the handle setting, select the handle to be changed to, and then select "Set."

   NOTE: Even when the handle is selected, the selected handle will not be set if "Back" is selected.

www.cargeek.ir

www.CarGeek.ir

CAN COMMUNICATION CONFIRMATION <VEHICLES FOR RUSSIA>

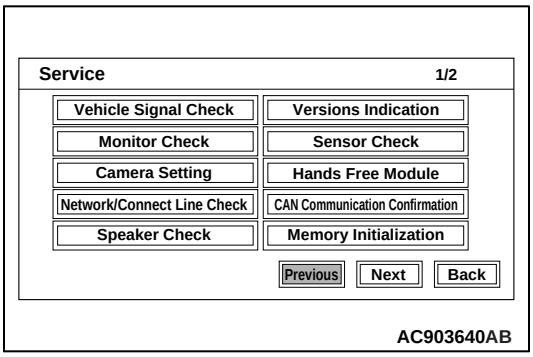

1. Select "CAN Communication Confirmation" on "Service" screen.

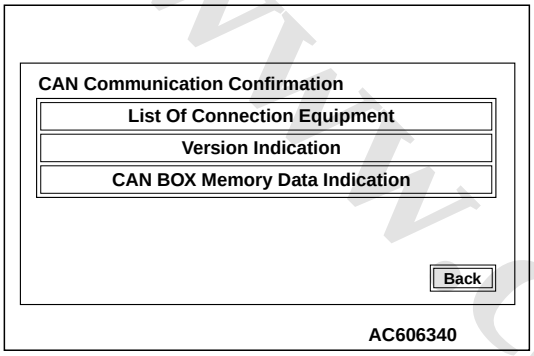

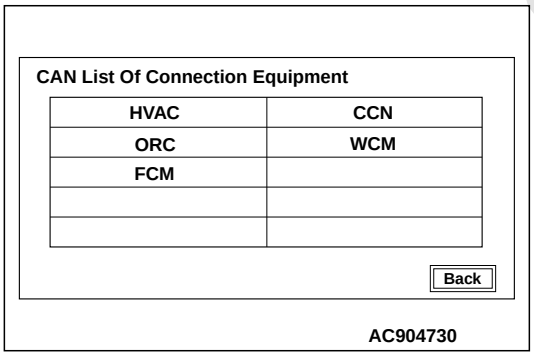

2. If "List Of Connection Equipment" is selected on "CAN Communication Confirmation" screen, the system will determine which equipment is installed according to the connected equipment reference table. Then the equipment which are connected to the CAN box unit will be displayed.

CAN BOX UNIT-CONNECTED EQUIPMENT REFERENCE TABLE

Screen indication	Equipment
HVAC	A/C-ECU
FCM	ETACS-ECU
ORC	SRS-ECU
CCN	Combination meter
WCM	Wireless control module

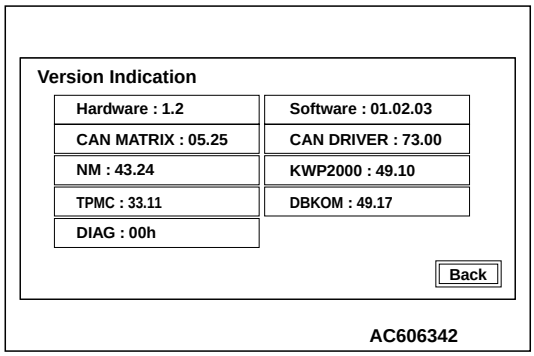

3. If "Version Indication" is selected on "CAN Communication Confirmation" screen, the version for each item is displayed.

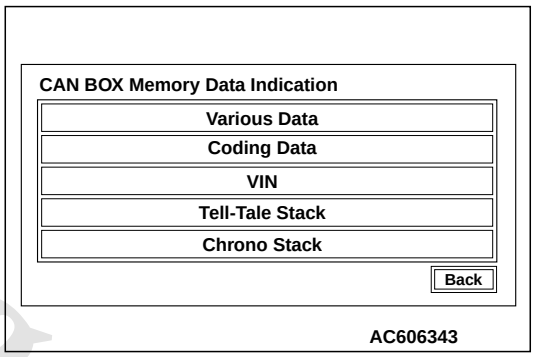

4. If "CAN BOX Memory Data Indication" is selected on "CAN Communication Confirmation" screen, "CAN BOX Memory Data Indication" will be displayed.
5. If any item is selected on "CAN BOX Memory Data Indication" screen, its relevant information is displayed.

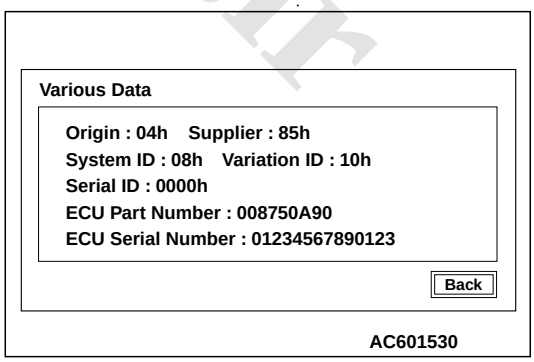

Various Data

www.cargeek.ir

www.CarGeek.ir

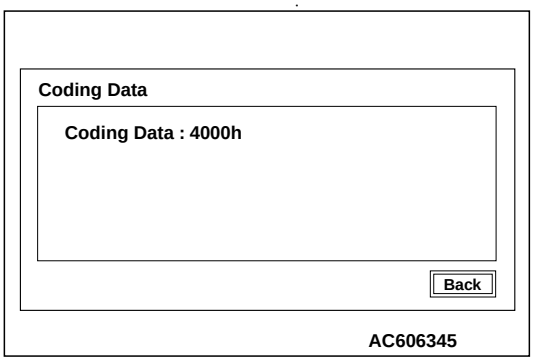

Coding Data

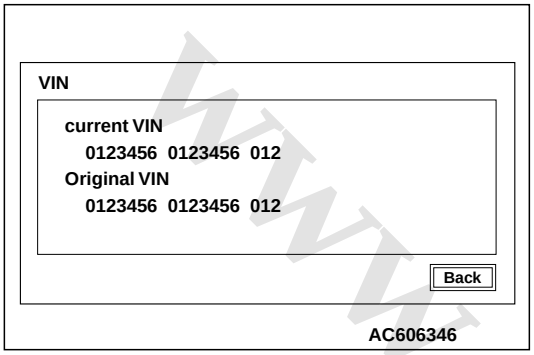

VIN

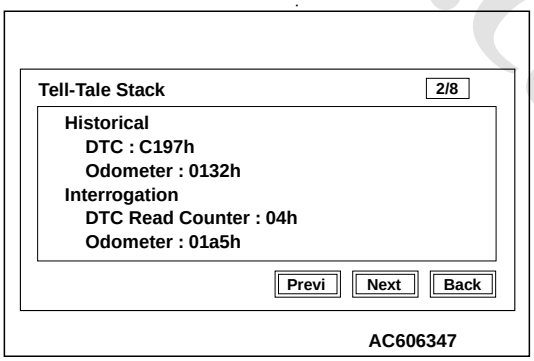

Tell-Tale Stack

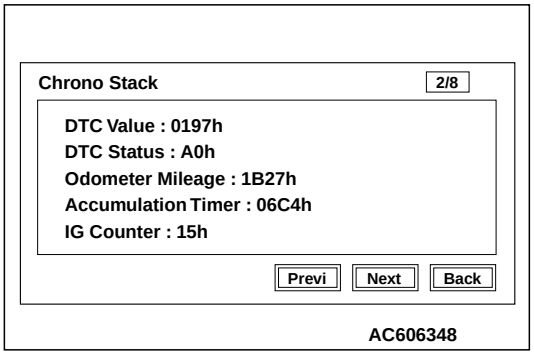

Chrono Stack

MEMORY INITIALIZATION

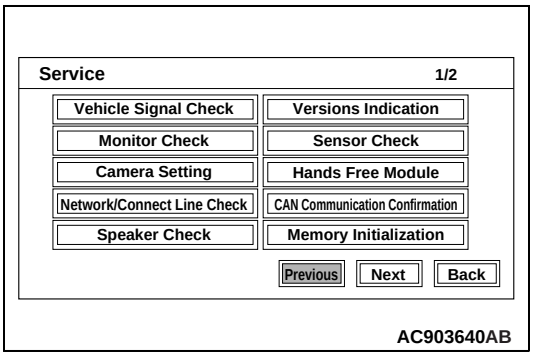

1. Select "Memory Initialization" on "Service" screen.

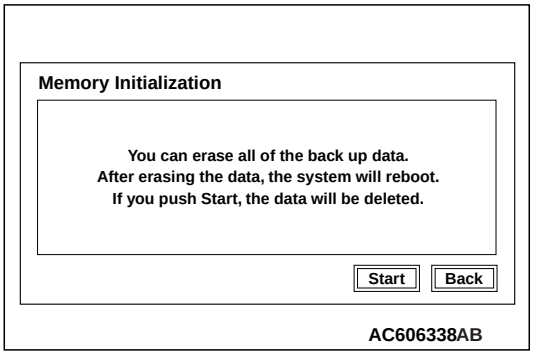

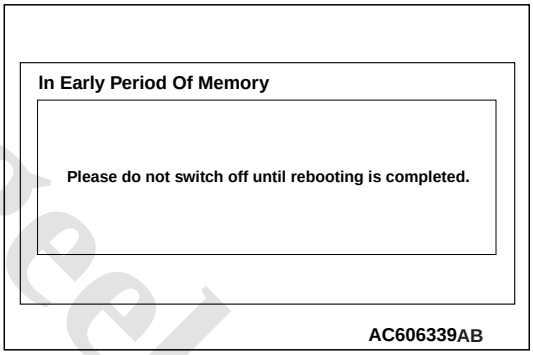

2. If you select "Start" on "Memory Initialization" screen, the settings such as registered locations and music server will be erased (initialised) from the memory.

   NOTE: If the ignition switch is turned to "LOCK" (OFF) position during the initialisation, the initialisation will be suspended. If the ignition switch is turned to "ACC" or "ON" position, the initialisation will be resumed.

3. After the memory initialisation is complete, the navigation system will restart automatically.

www.cargeek.ir

www.CarGeek.ir

TMC SENSITIVITY

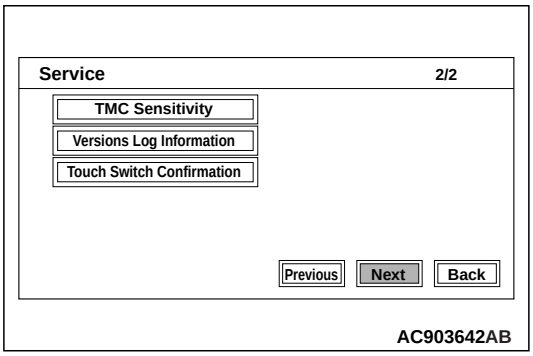

1. Select "TMC sensitivity" on "Service" screen.

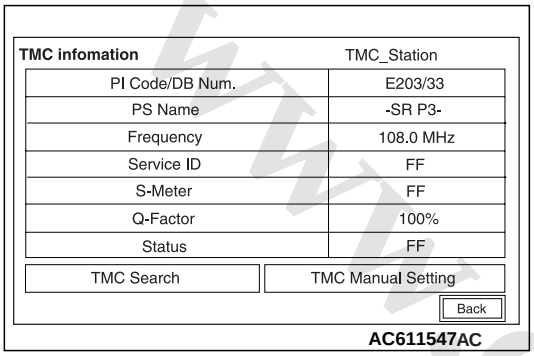

2. The information of TMC station is displayed.
   NOTE: When the now-received information is from selected TMC station, "TMC_station" is displayed on the upper right of the screen. "–" is displayed when the information is not received.

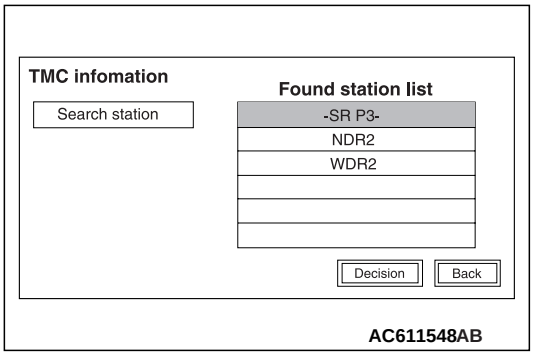

3. Select "TMC Search" on the "TMC information" screen to search the TMC station that can be received, and update and display the contents of "Found station list".
4. Select "TMC station" displayed on the "Found station list" and press "decision" switch to update the received TMC station and return to the "TMC information" screen. The information of selected TMC station is displayed on the TMC information screen.

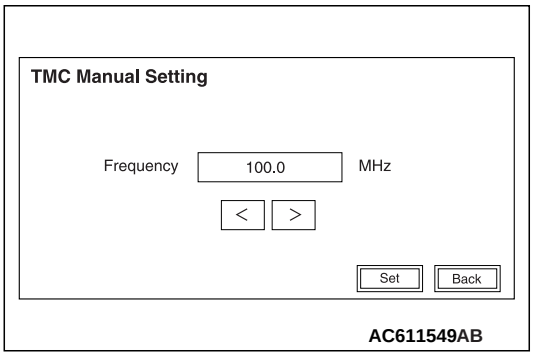

5. Select "TMC Manual Search" on the "TMC information" screen to set the frequency by "<" or ">" switch.
6. Update the received TMC station by "Set" switch and return to the "TMC information" screen. The information of selected TMC station is displayed on the TMC information screen.

VERSIONS LOG INFORMATION

Displays logs for drive and HDD.

Service Data Log

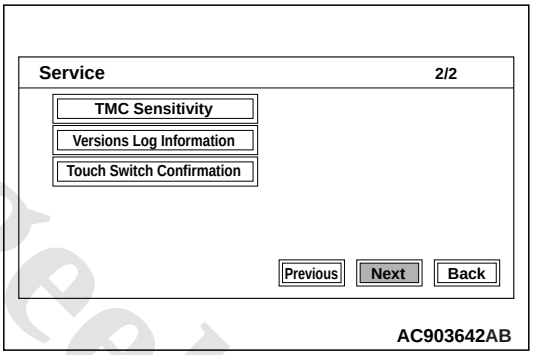

1. Select "Versions Log Information" on "Service" screen.

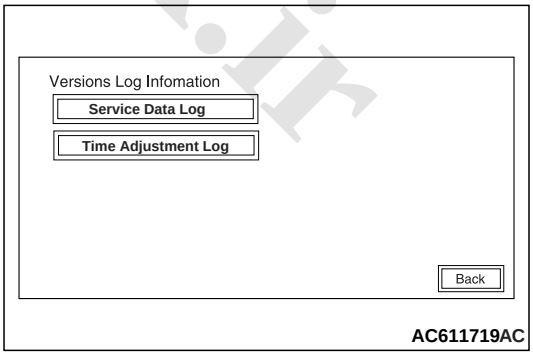

2. Select "Service Data Log" on the "Versions Log Information" screen.

www.cargeek.ir

www.CarGeek.ir

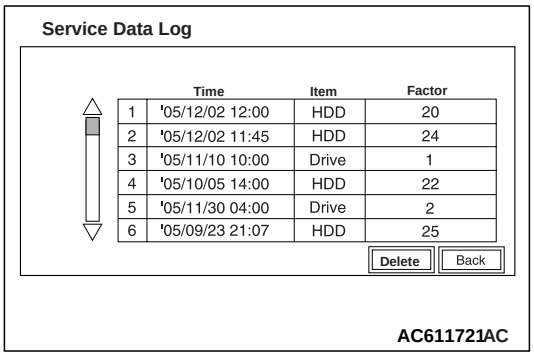

3. The logs are displayed from the latest one.
4. The log data is erased by pressing "Delete."

EACH LOG INFORMATION: FACTOR CODE TABLE

Item	Factor number	Produced log
Drive	20	Log concerning focus
	21	Log concerning disc type
	22	Log concerning disc
	25	Log concerning SEEK
	26	Log concerning servo start-up
	27	Log concerning power-On
	28	Log concerning loading / eject operation
	29	Log concerning pick-up operation
	30	Log concerning state of mechanism
	52	Log concerning TOC reading
HDD	1	Log concerning high temperature
	2	Log concerning low temperature
Monitor	1	Log concerning high temperature
AMP	0	Log concerning connection
	15	Log concerning communication
SP*1	1,2,4,8	Log concerning number of speakers unexpected
CAR*2	0 -12, 128 -131, 133,160, 192,255	Log concerning vehicle model unexpected

*NOTE: *1: The log is displayed when the number of speakers is unexpected.*
**2: The log is displayed when the vehicle model is unexpected.*

Time Adjustment Log

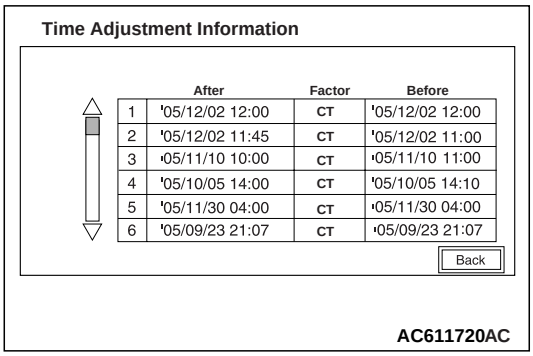

5. Select "Time Adjustment Log" on the "Versions Log Information" screen.
6. The time adjustment logs are displayed.

As for Factor, the following two types are displayed.
CT: Automatic adjustment
MAN: Manual adjustment

TOUCH SWITCH CONFIRMATION

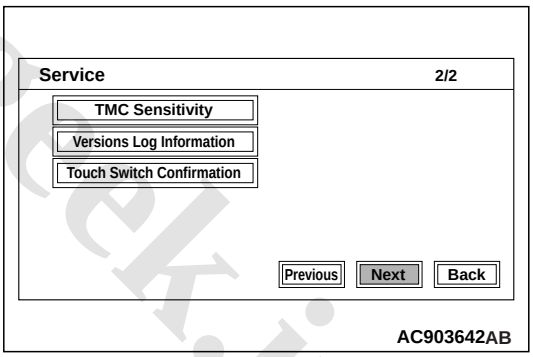

1. Select "Touch Switch Confirmation" on "Service" screen.

www.cargeek.ir

www.CarGeek.ir

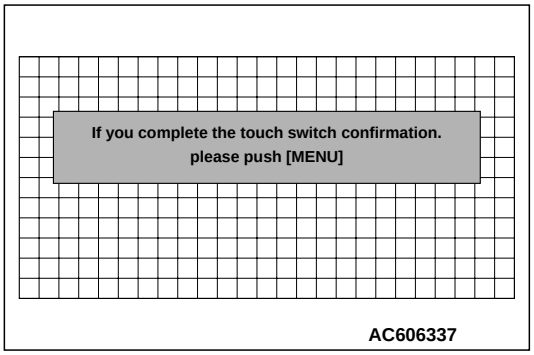

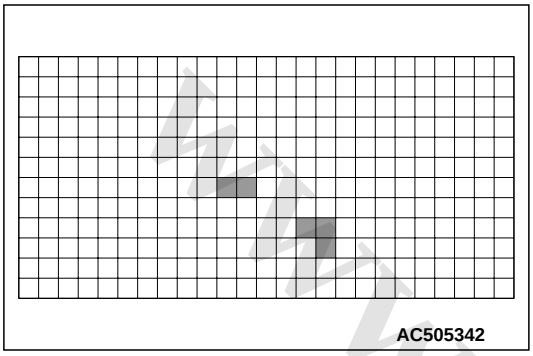

2. If you touch the screen, the colour of the dotted coordinate at the touched area will be changed.

DIAGNOSIS CODE CHART <VEHICLES FOR RUSSIA>

M1546001700498

⚠ CAUTION

On troubleshooting, if the ignition switch is turned ON while disconnecting connector(s), diagnosis code(s) associated with other system may be set. On completion, confirm all systems for diagnosis code(s). If diagnosis code(s) are set, erase them all.

Diagnosis code No.	Description	Reference page
B2226	AND [Audio Visual Navigation (HDD) unit] error	
B2240	Communication error with CAN Box (Communication error between CAN box unit and multivision display)	
B2477	Chassis No. Not Programmed	
U0019	Bus off (CAN-B)	
U0141	ETACS CAN timeout	
U0151	SRS-ABG CAN timeout	
U0155	Meter CAN timeout	
U0164	A/C-ECU CAN timeout	
U0168	WCM/KOS CAN timeout	
U1415	Coding not completed/Data fail	
U1417	Implausible coding data	

DIAGNOSIS CODE PROCEDURES <VEHICLES FOR RUSSIA>

Code No.B2226: AND [Audio visual navigation (HDD) unit] error

⚠ CAUTION

Whenever the ECU is replaced, ensure that the power supply circuit and the earthing circuit are normal. (Check that the voltage is 10 V or more.)

TROUBLE JUDGEMENT

When the CAN box unit receives the signal that an abnormality (service data) occurs to the multivision display, the CAN box unit sets diagnosis code B2226.

PROBABLE CAUSES

- The multivision display may be defective
- The CAN box unit may be defective

www.cargeek.ir

www.CarGeek.ir

DIAGNOSIS PROCEDURE

STEP 1. M.U.T.-III CAN bus diagnostics

Use the M.U.T.-III to diagnose the CAN bus lines.

Q: Is the check result normal?

YES : Go to Step 2.

NO : Repair the CAN bus line.

STEP 2.Check that the multivision display operate.

Check that the multivision display work normally.

NOTE: Check that there is no writing of service data log on the "Versions Log Information" for the MMCS service mode.(Refer to .)

Q: Is the check result normal?

YES : Go to Step 3.

NO : Diagnose the multivision display (Refer to Trouble symptom chart).

STEP 3. Check whether the diagnosis code is reset.

Check again if the diagnosis code is set to the CAN box unit.

(1) Erase the diagnosis code.

(2) Turn the ignition switch from "LOCK" (OFF) position to "ON" position.

(3) Check if diagnosis code is set.

Q: Is the diagnosis code set?

YES : Replace the CAN box unit temporarily and go to Step 4.

NO : The diagnosis is complete.

STEP 4. Check whether the diagnosis code is reset.

After temporary replacement of the multivision display, check if diagnosis code is set to the CAN box unit.

(1) Erase the diagnosis code.

(2) Turn the ignition switch from "LOCK" (OFF) position to "ON" position.

(3) Check if diagnosis code is set.

(4) Turn the ignition switch to the "LOCK" (OFF) position.

Q: Is the diagnosis code set?

YES : Replace the multivision display.

NO : Replace the CAN box unit.

Code No.B2240 Communication error with CAN box (Communication error between CAN box unit and multivision display)

⚠ CAUTION

- **If the diagnosis code No. B2240 is set, be sure to diagnose the CAN bus line.**
- **Before replacing the CAN box unit, ensure that the power supply circuit, the earth circuit, and the communication circuit are normal. (Check that the voltage is 10 V or more.)**

CAN Box Unit Communication Circuit

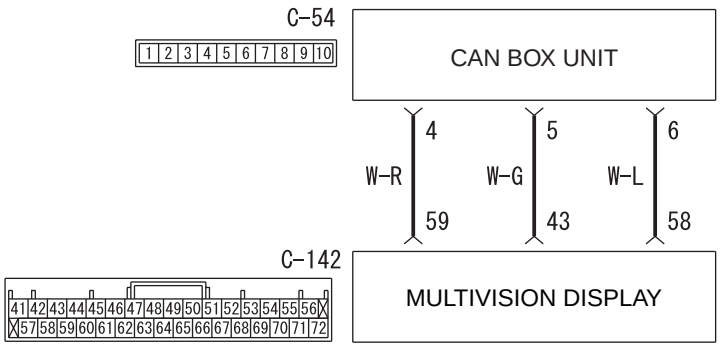

Wire colour code
B : Black LG : Light green G : Green L : Blue W : White Y : Yellow SB : Sky blue
BR : Brown O : Orange GR : Grey R : Red P : Pink V : Violet PU : Purple SI : Silver W9H54E097A

www.cargeek.ir

www.CarGeek.ir

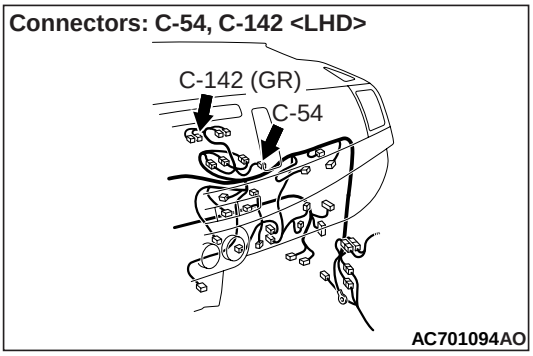

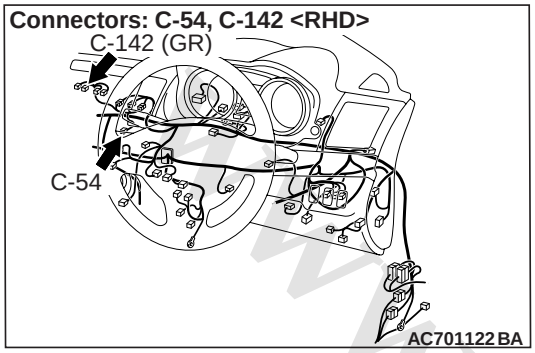

TROUBLE JUDGEMENT

When the abnormality occurs in the transmission/reception data between the CAN box unit and multivision display, the CAN box unit sets diagnosis code B2240.

PROBABLE CAUSES

- Malfunction of multivision display
- Malfunction of CAN box unit malfunction
- Damaged wiring harness and connectors

DIAGNOSIS PROCEDURE

STEP 1. Confirmation in MMCS service mode

Perform "Network/Connect Line Check" of the MMCS service mode, and check that the communication between the CAN box unit and the multivision display is normal. (Refer to .)

NOTE: When the communication between the CAN box unit and the multivision display is normal, "CAN BOX" is displayed on the check result screen. However, if the communication is not possible, "CAN BOX" is not displayed.

Q: Is the check result normal?
YES : Go to Step 2.
NO : Go to Step 3.

STEP 2. M.U.T.-III CAN bus diagnostics

Use the M.U.T.-III to diagnose the CAN bus lines.

Q: Is the check result normal?
YES : Go to Step 3.
NO : Repair the CAN bus line (Refer to GROUP 54C – Troubleshooting).

STEP 3. Connector check: C-142 multivision display connector and C-54 CAN box unit

Q: Is the check result normal?
YES : Go to Step 4.
NO : Repair or replace the damaged component(s).

STEP 4. Check the wiring harness between C-142 multivision display connector terminal No.43, 59, 58 and C-54 CAN box unit connector terminal No.5, 4, 6.

Check the communication lines for open circuit or short circuit.

Q: Is the check result normal?
YES : Go to Step 5.
NO : Repair the wiring harness.

STEP 5. Check whether the diagnosis code is reset.

Check again if the diagnosis code is set to the CAN box unit.
(1) Erase the diagnosis code.
(2) Turn the ignition switch from "LOCK" (OFF) position to "ON" position.
(3) Check if diagnosis code is set.

Q: Is the diagnosis code set?
YES : Replace the CAN box unit temporarily and go to Step 6.
NO : The diagnosis is complete.

STEP 6. Check whether the diagnosis code is reset.

Check again if the diagnosis code is set to the CAN box unit.
(1) Erase the diagnosis code.
(2) Turn the ignition switch from "LOCK" (OFF) position to "ON" position.
(3) Check if diagnosis code is set.

Q: Is the diagnosis code set?
YES : Replace the multivision display.
NO : Replace the CAN box unit.

www.cargeek.ir

www.CarGeek.ir

Code No.B2477: Chassis No. not programmed

⚠ CAUTION

- **If the diagnosis code No. B2477 is set, be sure to diagnose the CAN bus line.**
- **When replacing the CAN box unit, always check that the communication circuit is normal. (Check that the voltage is 10 V or more.)**

TROUBLE JUDGEMENT

With the ignition switch at the ON position, if the Chassis No. is not written to the CAN box unit, diagnosis code B2477 is stored.

PROBABLE CAUSES

- Malfunction of the CAN bus line.
- Malfunction of the ETACS-ECU.
- Malfunction of the CAN box unit.

DIAGNOSIS PROCEDURE

STEP 1. M.U.T.-III CAN bus diagnostics

Use the M.U.T.-III to diagnose the CAN bus lines.

Q: Is the check result normal?

YES : Go to Step 2.

NO : Repair the CAN bus line (Refer to GROUP 54C – Troubleshooting).

STEP 2. M.U.T.-III other system diagnosis code

Check if the diagnosis code relating to the coding error is set to the ETACS-ECU.

Q: Is the diagnosis code set?

YES : Diagnose the ETACS-ECU (Refer to GROUP 54A – ETACS-ECU – Troubleshooting).

NO : Go to Step 3.

STEP 3. Recheck for diagnosis code.

Check again if the diagnosis code is set to the CAN box unit.

(1) Erase the diagnosis code.
(2) Turn the ignition switch from "LOCK" (OFF) position to "ON" position.
(3) Check if diagnosis code is set.

Q: Is the diagnosis code set?

YES : Replace the CAN box unit.

NO : The trouble can be an intermittent malfunction (Refer to GROUP 00, How to use Troubleshooting/inspection Service Points – How to Cope with Intermittent Malfunction).

Code No.U0019 Bus off (CAN-B)

⚠ CAUTION

- **If there is any problem in the CAN bus lines, an incorrect diagnosis code may be set. Prior to this diagnosis, always diagnose the CAN bus lines.**
- **Before replacing the CAN box unit, be sure to check that the power supply circuit, earth circuit, and communication circuit are normal. (Check that the voltage is 10 V or more.)**

TROUBLE JUDGEMENT

When the CAN box unit is returned from the bus off state, or when the bus error is indicated to the CAN box unit state, the diagnosis code U0019 (CAN-B) is set.

COMMENTS ON TROUBLE SYMPTOM

The CAN box unit, power supply for the CAN box unit, earth circuit, or CAN bus line may have a problem.

PROBABLE CAUSES

- Malfunctions of CAN box unit
- Malfunction of CAN bus line wiring harness and connector

DIAGNOSIS PROCEDURE

STEP 1. M.U.T.-III CAN bus diagnostics

Use the M.U.T.-III to diagnose the CAN bus lines.

Q: Is the check result normal?

YES : Go to Step 2.

NO : Repair the CAN bus line (Refer to GROUP 54C – Troubleshooting).

STEP 2. Check whether the M.U.T.-III can communicate with the CAN box unit.

Q: Is the check result normal?

YES : Erase the diagnosis code. This diagnosis is complete.

NO : Check the power supply circuit of the CAN box unit, and repair if necessary.

www.cargeek.ir

www.CarGeek.ir

Code No.U0141 ETACS CAN timeout

⚠ CAUTION

- **If the diagnosis code No. U0141 is set, be sure to diagnose the CAN bus line.**
- **When replacing the CAN box unit, always check that the communication circuit is normal. (Check that the voltage is 10 V or more.)**

DIAGNOSTIC FUNCTION

If the signal from ETACS-ECU cannot be received, the CAN box unit sets the diagnosis code No. U0141.

JUDGEMENT CRITERIA

With the statuses that the ignition switch is at ON position, system voltage is 10 – 16 V (data from ETACS-ECU), and there is no malfunction to the power supply fuse (IOD fuse), or odometer value is 80.5 km or more, if the communication with ETACS-ECU cannot be established for 2,500 ms or more, the CAN box unit determines that a problem has occurred.

PROBABLE CAUSES

- Malfunction of CAN bus line
- Malfunction of CAN box unit
- Malfunction of the ETACS-ECU

DIAGNOSIS PROCEDURE

STEP 1. M.U.T.-III CAN bus diagnostics

Use the M.U.T.-III to diagnose the CAN bus lines.

Q: Is the check result normal?

YES : Go to Step 2.
NO : Repair the CAN bus line (Refer to GROUP 54C – Troubleshooting).

STEP 2. M.U.T.-III other system diagnosis code

Check again if the diagnosis code is set to the ETACS-ECU.

Q: Is the diagnosis code set?

YES : Diagnose the ETACS-ECU (Refer to GROUP 54A – ETACS-ECU – Troubleshooting).
NO : Go to Step 3.

STEP 3. Check the M.U.T.-III Diagnosis code for other systems

Check if the diagnosis code No. U0141 is set to combination meter.

Q: Is the diagnosis code set?

YES : Go to Step 4.
NO : Go to Step 5.

STEP 4. Diagnosis code recheck

Check again if the diagnosis code is set to the CAN box unit.

(1) Erase the diagnosis code.
(2) Turn the ignition switch from the LOCK (OFF) position to the ON position.
(3) Check if the diagnosis code is set.

Q: Is the diagnosis code set?

YES : Replace the ETACS-ECU.
NO : A poor connection, open circuit or other intermittent malfunction in the CAN bus line between the CAN box unit and the ETACS-ECU. (Refer to GROUP 00 – How to Use Troubleshooting/Inspection Service Points - How to Cope with Intermittent Malfunction .)

STEP 5. Check whether the diagnosis code is reset.

Check again if the diagnosis code is set to the CAN box unit.

(1) Erase the diagnosis code.
(2) Turn the ignition switch from "LOCK" (OFF) position to "ON" position.
(3) Check if diagnosis code is set.

Q: Is the diagnosis code set?

YES : Replace the CAN box unit.
NO : A poor connection, open circuit or other intermittent malfunction in the CAN bus line between the CAN box unit and the ETACS-ECU. (Refer to GROUP 00 – How to Use Troubleshooting/Inspection Service Points - How to Cope with Intermittent Malfunction .)

www.cargeek.ir

www.CarGeek.ir

Code No.U0151 SRS-ABG CAN timeout

⚠ CAUTION
- **If the diagnosis code No. U0151 is set, be sure to diagnose the CAN bus line.**
- **When replacing the CAN box unit, always check that the communication circuit is normal. (Check that the voltage is 10 V or more.)**

DIAGNOSTIC FUNCTION
If the signal from SRS-ECU cannot be received, the CAN box unit sets the diagnosis code No. U0151.

JUDGEMENT CRITERIA
With the statuses that the ignition switch is at ON position, system voltage is 10–16 V (data from ETACS-ECU), and there is no malfunction to the power supply fuse (IOD fuse), or odometer value is 80.5 km or more, if the communication with SRS-ECU cannot be established for 2,500 ms or more, the CAN box unit determines that a problem has occurred.

PROBABLE CAUSES
- Malfunction of CAN bus line
- Malfunction of the SRS-ECU
- Malfunction of CAN box unit

DIAGNOSIS PROCEDURE

STEP 1. M.U.T.-III CAN bus diagnostics
Use the M.U.T.-III to diagnose the CAN bus lines.

Q: Is the check result normal?
YES : Go to Step 2.
NO : Repair the CAN bus line (Refer to GROUP 54C – Troubleshooting).

STEP 2. M.U.T.-III other system diagnosis code
Check again if the diagnosis code is set to the SRS-ECU.

Q: Is the diagnosis code set?
YES : Troubleshoot the SRS-ECU (Refer to GROUP 52B – Troubleshooting).
NO : Go to Step 3.

STEP 3. Check the M.U.T.-III Diagnosis code for other systems
Check if the diagnosis code No. U0151 is set to combination meter.

Q: Is the diagnosis code set?
YES : Go to Step 4.
NO : Go to Step 5.

STEP 4. Diagnosis code recheck
Check again if the diagnosis code is set to the CAN box unit.
(1) Erase the diagnosis code.
(2) Turn the ignition switch from the LOCK (OFF) position to the ON position.
(3) Check if the diagnosis code is set.

Q: Is the diagnosis code set?
YES : Replace the SRS-ECU.
NO : A poor connection, open circuit or other intermittent malfunction in the CAN bus line between the CAN box unit and the SRS-ECU. (Refer to GROUP 00 – How to Use Troubleshooting/Inspection Service Points - How to Cope with Intermittent Malfunction .)

STEP 5. Check whether the diagnosis code is reset.
Check again if the diagnosis code is set to the CAN box unit.
(1) Erase the diagnosis code.
(2) Turn the ignition switch from "LOCK" (OFF) position to "ON" position.
(3) Check if diagnosis code is set.

Q: Is the diagnosis code set?
YES : Replace the CAN box unit.
NO : A poor connection, open circuit or other intermittent malfunction in the CAN bus line between the CAN box unit and the SRS-ECU. (Refer to GROUP 00 – How to Use Troubleshooting/Inspection Service Points - How to Cope with Intermittent Malfunction .)

www.cargeek.ir

www.CarGeek.ir

Code No.U0155 Meter CAN timeout

⚠ CAUTION
- **If the diagnosis code No. U0155 is set, be sure to diagnose the CAN bus line.**
- **When replacing the CAN box unit, always check that the communication circuit is normal. (Check that the voltage is 10 V or more.)**

DIAGNOSTIC FUNCTION
If the signal from combination meter cannot be received, the CAN box unit sets the diagnosis code No. U0155.

JUDGEMENT CRITERIA
With the statuses that the ignition switch is at ON position, system voltage is 10–16 V (data from ETACS-ECU), and there is no malfunction to the power supply fuse (IOD fuse), or odometer value is 80.5 km or more, if the communication with combination meter cannot be established for 2,500 ms or more, the CAN box unit determines that a problem has occurred.

PROBABLE CAUSES
- Malfunction of CAN bus line
- Malfunction of the combination meter
- Malfunction of CAN box unit

DIAGNOSIS PROCEDURE

STEP 1. M.U.T.-III CAN bus diagnostics
Use the M.U.T.-III to diagnose the CAN bus lines.

Q: Is the check result normal?
YES : Go to Step 2.
NO : Repair the CAN bus line (Refer to GROUP 54C – Troubleshooting).

STEP 2. M.U.T.-III other system diagnosis code
Check again if the diagnosis code is set to the combination meter.

Q: Is the diagnosis code set?
YES : Troubleshoot the combination meter (Refer to).
NO : Go to Step 3.

STEP 3. Check the M.U.T.-III Diagnosis code for other systems
Check if the diagnosis code No. U0155 is set to ETACS-ECU.

Q: Is the diagnosis code set?
YES : Go to Step 4.
NO : Go to Step 5.

STEP 4. Diagnosis code recheck
Check again if the diagnosis code is set to the CAN box unit.
(1) Erase the diagnosis code.
(2) Turn the ignition switch from the LOCK (OFF) position to the ON position.
(3) Check if the diagnosis code is set.

Q: Is the diagnosis code set?
YES : Replace the combination meter.
NO : A poor connection, open circuit or other intermittent malfunction in the CAN bus line between the CAN box unit and the combination meter. (Refer to GROUP 00 – How to Use Troubleshooting/Inspection Service Points - How to Cope with Intermittent Malfunction .)

STEP 5. Check whether the diagnosis code is reset.
Check again if the diagnosis code is set to the CAN box unit.
(1) Erase the diagnosis code.
(2) Turn the ignition switch from "LOCK" (OFF) position to "ON" position.
(3) Check if diagnosis code is set.

Q: Is the diagnosis code set?
YES : Replace the CAN box unit.
NO : A poor connection, open circuit or other intermittent malfunction in the CAN bus line between the CAN box unit and the combination meter. (Refer to GROUP 00 – How to Use Troubleshooting/Inspection Service Points - How to Cope with Intermittent Malfunction .)

www.cargeek.ir

www.CarGeek.ir

Code No.U0164 A/C-ECU CAN timeout

⚠ CAUTION
- **If the diagnosis code No. U0164 is set, be sure to diagnose the CAN bus line.**
- **When replacing the CAN box unit, always check that the communication circuit is normal. (Check that the voltage is 10 V or more.)**

DIAGNOSTIC FUNCTION
If the signal from A/C-ECU cannot be received, the CAN box unit sets the diagnosis code No. U0164.

JUDGEMENT CRITERIA
With the statuses that the ignition switch is at ON position, system voltage is 10–16 V (data from ETACS-ECU), and there is no malfunction to the power supply fuse (IOD fuse), or odometer value is 80.5 km or more, if the communication with A/C-ECU cannot be established for 2,500 ms or more, the CAN box unit determines that a problem has occurred.

PROBABLE CAUSES
- Malfunction of CAN bus line
- Malfunction of the A/C-ECU
- Malfunction of CAN box unit

DIAGNOSIS PROCEDURE

STEP 1. M.U.T.-III CAN bus diagnostics
Use the M.U.T.-III to diagnose the CAN bus lines.

Q: Is the check result normal?
YES : Go to Step 2.
NO : Repair the CAN bus line (Refer to GROUP 54C – Troubleshooting).

STEP 2. M.U.T.-III other system diagnosis code
Check if diagnosis code is set to the A/C-ECU .

Q: Is the diagnosis code set?
YES : Troubleshoot the A/C-ECU (Refer to GROUP 55A – Troubleshooting), and then go to Step 3.
NO : Go to Step 3.

STEP 3. Check the M.U.T.-III Diagnosis code for other systems
Check if the diagnosis code No. U0164 is set to combination meter.

Q: Is the diagnosis code set?
YES : Go to Step 4.
NO : Go to Step 5.

STEP 4. Diagnosis code recheck
Check again if the diagnosis code is set to the CAN box unit.
(1) Erase the diagnosis code.
(2) Turn the ignition switch from the LOCK (OFF) position to the ON position.
(3) Check if the diagnosis code is set.

Q: Is the diagnosis code set?
YES : Replace the A/C-ECU.
NO : A poor connection, open circuit or other intermittent malfunction in the CAN bus line between the CAN box unit and the A/C-ECU. (Refer to GROUP 00 – How to Use Troubleshooting/Inspection Service Points - How to Cope with Intermittent Malfunction .)

STEP 5. Check whether the diagnosis code is reset.
Check again if the diagnosis code is set to the CAN box unit.
(1) Erase the diagnosis code.
(2) Turn the ignition switch from "LOCK" (OFF) position to "ON" position.
(3) Check if diagnosis code is set.

Q: Is the diagnosis code set?
YES : Replace the CAN box unit.
NO : A poor connection, open circuit or other intermittent malfunction in the CAN bus line between the CAN box unit and the A/C-ECU. (Refer to GROUP 00 – How to Use Troubleshooting/Inspection Service Points - How to Cope with Intermittent Malfunction .)

www.cargeek.ir

www.CarGeek.ir

Code No.U0168 WCM/KOS CAN timeout

⚠ CAUTION
- **If diagnosis code No. U0168 is set, be sure to diagnose the CAN bus line.**
- **When replacing the CAN box unit, always check that the communication circuit is normal. (Check that the voltage is 10 V or more.)**

DIAGNOSTIC FUNCTION
If the signal from KOS-ECU or WCM cannot be received, the CAN box unit sets the diagnosis code No. U0168.

JUDGEMENT CRITERIA
With the statuses that the ignition switch is at ON position, system voltage is 10 – 16 V (data from ETACS-ECU), and there is no malfunction to the power supply fuse (IOD fuse), or odometer value is 80.5 km or more, if the communication with KOS-ECU or WCM cannot be established for 2,500 ms or more, the CAN box unit determines that a problem has occurred.

PROBABLE CAUSES
- Malfunction of CAN bus line
- Malfunction of the KOS-ECU
- Malfunction of the WCM
- Malfunction of CAN box unit

DIAGNOSIS PROCEDURE

STEP 1. M.U.T.-III CAN bus diagnostics
Use the M.U.T.-III to diagnose the CAN bus lines.

Q: Is the check result normal?
YES : Go to Step 2.
NO : Repair the CAN bus line (Refer to GROUP 54C – Troubleshooting).

STEP 2. M.U.T.-III other system diagnosis code
Check again if the diagnosis code is set to the KOS-ECU or WCM.

Q: Is the diagnosis code set?
YES : Troubleshoot the KOS or WCM (Refer to GROUP 42B – Diagnosis Code Chart <KOS> or GROUP 42C – Diagnosis Code Chart <WCM>).
NO : Go to Step 3.

STEP 3. Check the M.U.T.-III Diagnosis code for other systems
Check if the diagnosis code No. U0168 is set to combination meter.

Q: Is the diagnosis code set?
YES : Go to Step 4.
NO : Go to Step 5.

STEP 4. Diagnosis code recheck
Check again if the diagnosis code is set to the CAN box unit.
(1) Erase the diagnosis code.
(2) Turn the ignition switch from the LOCK (OFF) position to the ON position.
(3) Check if the diagnosis code is set.

Q: Is the diagnosis code set?
YES : Replace the KOS <Vehicles with KOS-ECU> or WCM <Vehicles with WCM>.
NO : A poor connection, open circuit or other intermittent malfunction in the CAN bus line between the CAN box unit and the KOS <Vehicles with KOS-ECU> or WCM <Vehicles with WCM>. (Refer to GROUP 00 – How to Use Troubleshooting/Inspection Service Points - How to Cope with Intermittent Malfunction .)

STEP 5. Check whether the diagnosis code is reset.
Check again if the diagnosis code is set to the CAN box unit.
(1) Erase the diagnosis code.
(2) Turn the ignition switch from "LOCK" (OFF) position to "ON" position.
(3) Check if diagnosis code is set.

Q: Is the diagnosis code set?
YES : Replace the CAN box unit.
NO : A poor connection, open circuit or other intermittent malfunction in the CAN bus line between the CAN box unit and the KOS <Vehicles with KOS-ECU> or WCM <Vehicles with WCM>. (Refer to GROUP 00 – How to Use Troubleshooting/Inspection Service Points - How to Cope with Intermittent Malfunction .)

www.cargeek.ir

www.CarGeek.ir

Code No.U1415 Coding not completed/Data fail

⚠ CAUTION

- **If there is any problem in the CAN bus lines, an incorrect diagnosis code may be set. Prior to this diagnosis, always diagnose the CAN bus lines.**
- **Before replacing the CAN box unit, be sure to check that the power supply circuit, earth circuit, and communication circuit are normal. (Check that the voltage is 10 V or more.)**

TROUBLE JUDGEMENT

When the vehicle information data is not registered to the CAN box unit, the CAN box unit sets the diagnosis code No.U1415.

COMMENTS ON TROUBLE SYMPTOM

The can box unit, ETACS-ECU, or CAN bus line may have a problem.

PROBABLE CAUSES

- Malfunctions of CAN box unit
- Malfunction of the ETACS-ECU
- Malfunction of CAN bus line wiring harness and connector

DIAGNOSIS PROCEDURE

STEP 1. M.U.T.-III CAN bus diagnostics

Use the M.U.T.-III to diagnose the CAN bus lines.

Q: Is the check result normal?

YES : Go to Step 2.
NO : Repair the CAN bus line (Refer to GROUP 54C – Troubleshooting).

STEP 2. M.U.T.-III other system diagnosis code

Check if the diagnosis code relating to the coding error is set to the ETACS-ECU.

Q: Is the diagnosis code set?

YES : Diagnose the ETACS-ECU (Refer to ETACS – Troubleshooting).
NO : Go to Step 3.

STEP 3. Check whether the diagnosis code is reset.

Check again if the diagnosis code is set to the CAN box unit.

(1) Erase the diagnosis code.
(2) Turn the ignition switch from "LOCK" (OFF) position to "ON" position.
(3) Check if diagnosis code is set.

Q: Is the diagnosis code set?

YES : Replace the CAN box unit.
NO : The trouble can be an intermittent malfunction (Refer to GROUP 00 – How to use Troubleshooting/inspection Service Points – How to Cope with Intermittent Malfunction).

Code No.U1417 Implausible coding data

⚠ CAUTION

- **If diagnosis code U1417 is set in CAN box unit, always diagnose the CAN bus lines. If there is any fault in the CAN bus lines, an incorrect diagnosis code may be set. In this case, the set diagnosis code is not highly reliable.**
- **Before replacing the ECU, ensure that the communication circuit is normal. (Check that the voltage is 10 V or more.)**
- **When the diagnosis code U1417 is set in CAN box unit, the diagnosis code may also be set in ETACS-ECU. When the diagnosis code is set in ETACS-ECU, carry out the diagnosis of the diagnosis code for ETACS-ECU first.**

CIRCUIT OPERATION

CAN box unit receives the vehicle information stored in the ETACS-ECU via CAN bus lines.

JUDGEMENT CRITERIA

CAN box unit communicates with ETACS-ECU via CAN bus lines. This diagnosis code is set when the vehicle information received from the ETACS-ECU is invalid.

PROBABLE CAUSES

- Malfunction of ETACS-ECU
- Malfunction of the ETACS-ECUs have been interchanged between two vehicles.
- Malfunction of the CAN box unit
- External noise interference

www.cargeek.ir

www.CarGeek.ir

DIAGNOSIS PROCEDURE

STEP 1. M.U.T.-III CAN bus diagnostics
Use the M.U.T.-III to diagnose the CAN bus lines.

Q: Is the check result normal?
YES : Go to Step 2.
NO : Repair the CAN bus line (Refer to GROUP 54C – Troubleshooting).

STEP 2. M.U.T.-III other system diagnosis code
Check if the diagnosis code relating to the coding error is set to the ETACS-ECU.

Q: Is the diagnosis code set?
YES : Troubleshoot the ETACS (Refer to ETACS, Diagnosis).
NO : Go to Step 3.

STEP 3. Check whether the diagnosis code is reset.
Check again if the diagnosis code is set to the CAN box unit.
(1) Erase the diagnosis code.
(2) Turn the ignition switch from "LOCK" (OFF) position to "ON" position.
(3) Check if diagnosis code is set.

Q: Is the diagnosis code set?
YES : Replace CAN box unit.
NO : The trouble can be an intermittent malfunction (Refer to GROUP 00, How to use Troubleshooting/inspection Service Points – How to Cope with Intermittent Malfunction).

TROUBLE SYMPTOM CHART

M1546001801830

Inspection procedure No.	Trouble symptom		Reference page
1	No navigation screen is displayed.	<Vehicles without Auto Stop & Go (AS&G) System>	
		<Vehicles with Auto Stop & Go (AS&G) System>	
2	No sound is heard.	<Vehicles without audio amplifier>	
		<Vehicles with audio amplifier>	
3	Not sound is heard from one of the speakers.	<Except vehicles for RUSSIA (vehicles without audio amplifier)>	
		<Vehicles for RUSSIA (vehicles without audio amplifier)>	
		<Except vehicles for RUSSIA (vehicles with audio amplifier)>	
		<Vehicles for RUSSIA (vehicles with audio amplifier)>	
4	The navigation system can be operated while the vehicle is driven.		
5	The screen is not normal in the navigation mode. (The own vehicle mark is dislocated.)	<Except vehicles for RUSSIA>	
		<Vehicles for RUSSIA>	
6	The FM/MW/LM radio broadcasting can not be received.		
7	GPS signal can not be received.	<Except vehicles for RUSSIA>	
		<Vehicles for RUSSIA>	
8	CD/DVD cannot be Played.		
9	Image of a DVD is played, but no sound is played.		
10	Sound of a DVD can be played, but no image is played.		
11	The picture and sound of audio and video adapter’s input are not played.		
12	Check the CAN box unit power supply circuit. <Vehicles for RUSSIA>		

www.cargeek.ir

www.CarGeek.ir

NOTE:
- *If the multivision display is reset or sound jump occurs at the auto restart by Auto Stop & Go (AS&G) System, carry out the DC/DC converter troubleshooting of "Audio equipment reset or sound jump occurs at auto start". (Refer to .) <Vehicles with Auto Stop & Go (AS&G) System>*
- *For the troubleshooting of the USB box, refer to .<Vehicles with USB box>*
- *For the troubleshooting of the hands free ECU, refer to .<Vehicles with hands free ECU>*
- *For the troubleshooting of the steering wheel audio remote control switch, refer to .<Vehicles with steering wheel audio remote control switch>*

SYMPTOM PROCEDURES

Inspection Procedure 1: No navigation screen is displayed. <Vehicles without Auto Stop & Go (AS&G) System>

⚠ CAUTION

Before replacing the multivision display, ensure that the power supply circuit, the earth circuit, and the communication circuit are normal. (Check that the voltage is 10 V or more.)

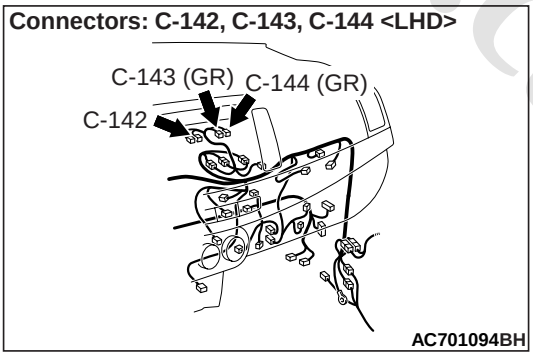

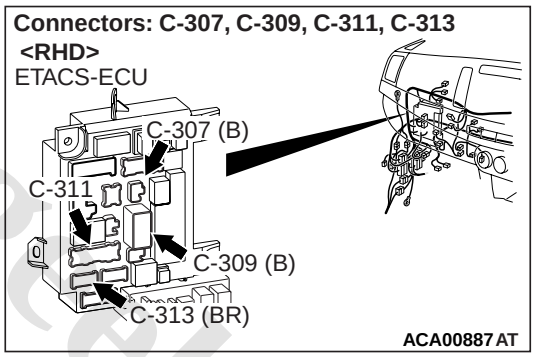

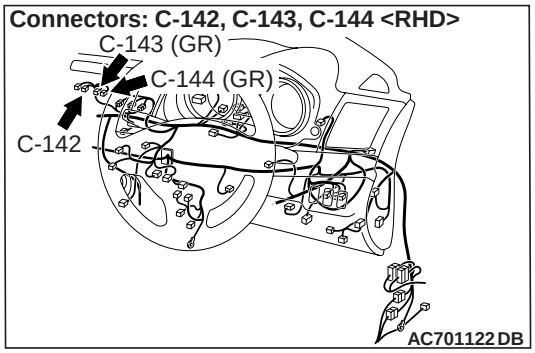

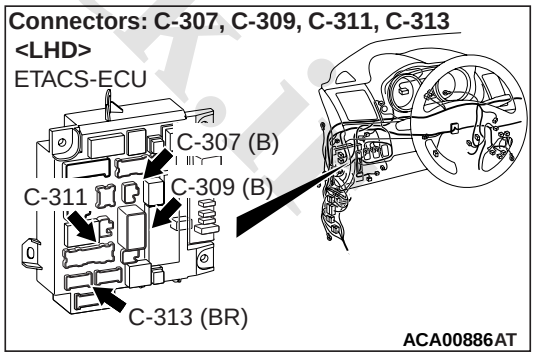

COMMENTS ON TROUBLE SYMPTOM

When the ignition switch is turned to the ACC or ON position, if the screen is not displayed at all, the power supply circuit or multivision display may have a problem.

PROBABLE CAUSES
- Malfunction of power supply circuit
- Malfunction of multivision display

www.cargeek.ir

www.CarGeek.ir

DIAGNOSIS PROCEDURE

STEP 1. M.U.T.-III other system data list

Check the input signal of ACC relay.

- Turn the ignition switch to the ACC position.

Item No.	Item name	Normal condition
Item 288	ACC switch	ON

OK: Normal condition is displayed.

Q: Is the check result normal?

YES : Go to Step 2.

NO : Refer to ETACS – Input Signal Procedure 1 "The ignition switch (ACC) signal is not sent to the ETACS-ECU" .

STEP 2. Connector check: C-144 multivision display and C-313 ETACS-ECU connector

Q: Is the check result normal?

YES : Go to Step 3.

NO : Repair the defective connector.

STEP 3. Voltage measurement at C-144 multivision display connector.

(1) Disconnect the connector, and measure at the wiring harness-side connector.

(2) Turn the ignition switch to the ACC position.

(3) Voltage between C-144 multivision display connector terminal No.14 and the body earth

OK: System voltage

Q: Is the check result normal?

YES : Go to Step 5.

NO : Go to Step 4.

STEP 4. Check the wiring harness between C-144 multivision display connector terminal No.14 and C-313 ETACS-ECU connector terminal No.1

- Check the power supply lines (battery power supply) for open circuit and short circuit.

NOTE: Prior to the wiring harness inspection, check intermediate connector C-139, C-128 and C-31, and repair if necessary.

Q: Is the check result normal?

YES : The trouble can be an intermittent malfunction (Refer to GROUP 00 – How to use Troubleshooting/inspection Service Points – How to Cope with Intermittent Malfunction).

NO : Repair the wiring harness.

STEP 5. Connector check: C-142, C-143, C-144 multivision display connector

Q: Is the check result normal?

YES : Go to Step 6.

NO : Repair or replace the damaged component(s).

STEP 6. Resistance measurement at C-142, C-143, C-144 multivision display connector.

(1) Disconnect C-144 multivision display connector, and measure the resistance available at the wiring harness side of the connector.

(2) Check the continuity between terminal No.9 and body earth.

OK: Continuity exists (2 Ω or less)

(3) Disconnect C-143 multivision display connector, and measure the resistance available at the wiring harness side of the connector.

(4) Check the continuity between terminal No.25 and body earth.

OK: Continuity exists (2 Ω or less)

(5) Disconnect C-142 multivision display connector, and measure the resistance available at the wiring harness side of the connector.

(6) Check the continuity between terminal No. 65 and body earth.

OK: Continuity exists (2 Ω or less)

Q: Is the check result normal?

YES : Go to Step 8.

NO : Go to Step 7.

STEP 7. Check the wiring harness between C-144 multivision display connector terminal No.9 or C-143 multivision display connector terminal No.25 or C-142 multivision display connector terminal No.65 and body earth.

NOTE: Prior to the wiring harness inspection, check intermediate connector C-133 and C-139, and repair if necessary.

- Check the earth wires for open circuit.

Q: Is the check result normal?

YES : The trouble can be an intermittent malfunction (Refer to GROUP 00 – How to use Troubleshooting/inspection Service Points – How to Cope with Intermittent Malfunction).

NO : Repair the wiring harness.

www.cargeek.ir

www.CarGeek.ir

STEP 8. Voltage measurement at C-144 multivision display connector.

(1) Disconnect the connector, and measure at the wiring harness-side connector.
(2) Voltage between C-144 multivision display connector terminal No.17 and the body earth

OK: System voltage

Q: Is the check result normal?
YES : Go to Step 10.
NO : Go to Step 9.

STEP 9. Check the wiring harness between C-144 multivision display connector terminal No.17 and fusible link (38) <Diesel> or (36) <Petrol>

- Check the power supply lines (battery supply) for open circuit and short circuit.

NOTE: Prior to the wiring harness inspection, check intermediate connector C-139, C-128 and C-31, ETACS-ECU connector C-311 and 307, and repair if necessary.

Q: Is the check result normal?
YES : The trouble can be an intermittent malfunction (Refer to GROUP 00 – How to use Troubleshooting/inspection Service Points – How to Cope with Intermittent Malfunction).
NO : Repair the wiring harness.

STEP 10. Voltage measurement at C-143 multivision display connector.

(1) Disconnect the connector, and measure at the wiring harness-side connector.
(2) Voltage between C-143 multivision display connector terminal No.21 and the body earth

OK: System voltage

Q: Is the check result normal?
YES : Go to Step 13.
NO : Go to Step 11.

STEP 11. Connector check: C-128 intermediate connector

Q: Is the check result normal?
YES : Go to Step 12.
NO : Repair or replace the damaged component(s).

STEP 12. Check the wiring harness between C-143 multivision display connector terminal No. 21 and C-128 intermediate connector terminal No.9

- Check the power supply lines (battery supply) for open circuit and short circuit.

NOTE: Prior to the wiring harness inspection, check intermediate connector C-133, and repair if necessary.

Q: Is the check result normal?
YES : The trouble can be an intermittent malfunction (Refer to GROUP 00 – How to use Troubleshooting/inspection Service Points – How to Cope with Intermittent Malfunction).
NO : Repair the wiring harness.

STEP 13. Retest the system

Check if the multivision display power is turned ON.

Q: Is the check result normal?
YES : The trouble can be an intermittent malfunction (Refer to GROUP 00 – How to use Troubleshooting/inspection Service Points – How to Cope with Intermittent Malfunction).
NO : Replace the multivision display.

www.cargeek.ir

www.CarGeek.ir

Inspection Procedure 1: No navigation screen is displayed. <Vehicles with Auto Stop & Go (AS&G) System>

⚠ CAUTION

Before replacing the multivision display, ensure that the power supply circuit, the earth circuit, and the communication circuit are normal. (Check that the voltage is 10 V or more.)

Connectors: C-65, C-142, C-143, C-144 <LHD>

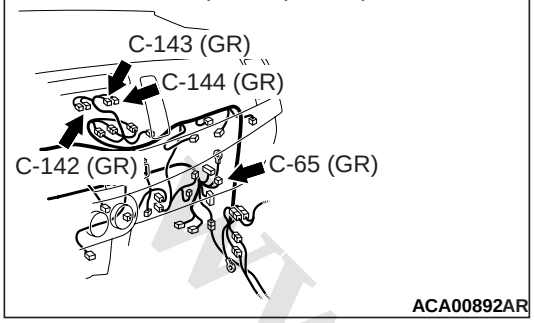

Connector: C-65, C-142, C-143, C-144 <RHD>

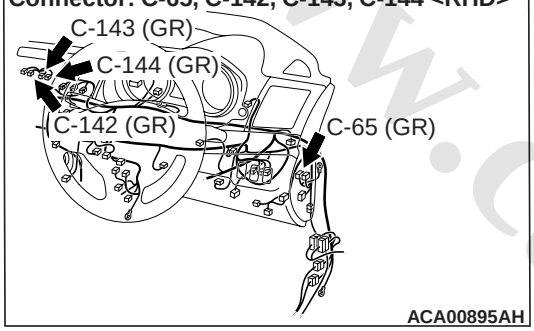

Connectors: C-307, C-309, C-311, C-313 <RHD>

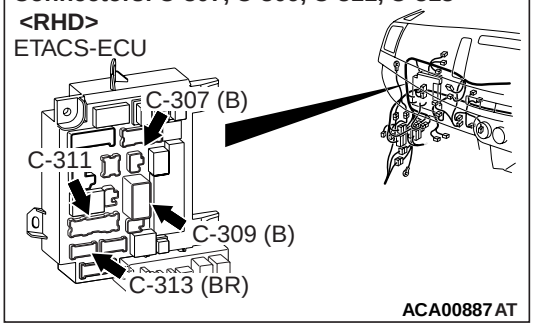

Connectors: C-307, C-309, C-311, C-313 <LHD>

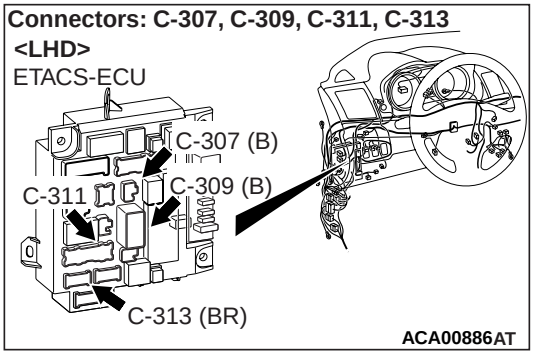

COMMENTS ON TROUBLE SYMPTOM

When the ignition switch is turned to the ACC or ON position, if the screen is not displayed at all, the power supply circuit, DC/DC converter or multivision display may have a problem.

PROBABLE CAUSES

- Malfunction of DC/DC converter
- Malfunction of power supply circuit
- Malfunction of multivision display

DIAGNOSIS PROCEDURE

STEP 1. M.U.T.-III other system data list

Check the input signal of ACC relay.

- Turn the ignition switch to the ACC position.

Item No.	Item name	Normal condition
Item 288	ACC switch	ON

OK: Normal condition is displayed.

Q: Is the check result normal?

YES : Go to Step 2.

NO : Refer to ETACS – Input Signal Procedure 1 "The ignition switch (ACC) signal is not sent to the ETACS-ECU" .

STEP 2. Connector check: C-144 multivision display and C-313 ETACS-ECU connector

Q: Is the check result normal?

YES : Go to Step 3.

NO : Repair the defective connector.

STEP 3. Voltage measurement at C-144 multivision display connector.

(1) Disconnect the connector, and measure at the wiring harness-side connector.

(2) Turn the ignition switch to the ACC position.

(3) Voltage between C-144 multivision display connector terminal No.14 and the body earth

OK: System voltage

Q: Is the check result normal?

YES : Go to Step 7.

NO : Go to Step 4.

www.cargeek.ir

www.CarGeek.ir

STEP 4. Check the wiring harness between C-144 multivision display connector terminal No.14 and C-313 ETACS-ECU connector terminal No.1

- Check the power supply lines (battery power supply) for open circuit and short circuit.

NOTE: Prior to the wiring harness inspection, check intermediate connector C-31, C-128 and C-139, and repair if necessary.

Q: Is the check result normal?
YES : Go to Step 5.
NO : Repair the wiring harness.

STEP 5. Connector check: C-65 DC/DC converter connector

Q: Is the check result normal?
YES : Go to Step 6.
NO : Repair the defective connector.

STEP 6. Check the wiring harness between C-65 DC/DC converter connector terminal No.8 and C-128 intermediate connector terminal No.1.

- Check the signal lines for short circuit.

Q: Is the check result normal?
YES : Go to Step 7.
NO : Repair the wiring harness.

STEP 7. Connector check: C-142, C-143 multivision display connector

Q: Is the check result normal?
YES : Go to Step 8.
NO : Repair or replace the damaged component(s).

STEP 8. Resistance measurement at C-142, C-143, C-144 multivision display connector.

(1) Disconnect C-144 multivision display connector, and measure the resistance available at the wiring harness side of the connector.
(2) Check the continuity between terminal No.9 and body earth.

OK: Continuity exists (2 Ω or less)

(3) Disconnect C-143 multivision display connector, and measure the resistance available at the wiring harness side of the connector.
(4) Check the continuity between terminal No.25 and body earth.

OK: Continuity exists (2 Ω or less)

(5) Disconnect C-142 multivision display connector, and measure the resistance available at the wiring harness side of the connector.
(6) Check the continuity between terminal No.65 and body earth.

OK: Continuity exists (2 Ω or less)

Q: Is the check result normal?
YES : Go to Step 10.
NO : Go to Step 9.

STEP 9. Check the wiring harness between C-144 multivision display connector terminal No.9 or C-143 multivision display connector terminal No.25 or C-142 multivision display connector terminal No.65 and body earth.

NOTE: Prior to the wiring harness inspection, check intermediate connector C-133 and C-139, and repair if necessary.

- Check the earth wires for open circuit.

Q: Is the check result normal?
YES : The trouble can be an intermittent malfunction (Refer to GROUP 00 – How to use Troubleshooting/inspection Service Points – How to Cope with Intermittent Malfunction).
NO : Repair the wiring harness.

STEP 10. Voltage measurement at C-144 multivision display connector.

(1) Disconnect the connector, and measure at the wiring harness-side connector.
(2) Voltage between C-144 multivision display connector terminal No.17 and the body earth

OK: System voltage

Q: Is the check result normal?
YES : Go to Step 17.
NO : Go to Step 11.

STEP 11. Check the wiring harness between C-144 multivision display connector terminal No.17 and fusible link (38) <Diesel> or (36) <Petrol>

- Check the power supply lines (battery supply) for open circuit and short circuit.

NOTE: Prior to the wiring harness inspection, check intermediate connector C-128, C-31 and C-139, ETACS-ECU connector C-311 and C-307, and repair if necessary.

Q: Is the check result normal?
YES : Go to Step 12.
NO : Repair the wiring harness.

www.cargeek.ir

www.CarGeek.ir

STEP 12. Voltage measurement at C-65 DC/DC converter connector.

(1) Disconnect C-65 DC/DC converter connector, and measure at the wiring harness side.
(2) Measure the voltage between terminal No.9 and body earth.

OK: System voltage

Q: Is the check result normal?
YES : Go to Step 13.
NO : Go to Step 16.

STEP 13. Check the DC/DC converter.

Check the continuity of the DC/DC converter (Refer to).

Q: Is the check result normal?
YES : Go to Step 14.
NO : Replace the DC/DC converter.

STEP 14. Connector check: C-128 intermediate connector

Q: Is the check result normal?
YES : Go to Step 15.
NO : Repair the defective connector.

STEP 15. Check the wiring harness between C-128 intermediate connector terminal No.9 and C-65 DC/DC converter terminal No.7.

- Check the power supply lines (battery supply) for open circuit and short circuit.

Q: Is the check result normal?
YES : The trouble can be an intermittent malfunction (Refer to GROUP 00 – How to use Troubleshooting/inspection Service Points – How to Cope with Intermittent Malfunction).
NO : Repair the wiring harness.

STEP 16. Check the wiring harness between DC/DC converter connector terminal No.9 and fusible link (38) <Diesel> or (36) <Petrol>

- Check the power supply lines (battery supply) for open circuit and short circuit.

Q: Is the check result normal?
YES : The trouble can be an intermittent malfunction (Refer to GROUP 00 – How to use Troubleshooting/inspection Service Points – How to Cope with Intermittent Malfunction).
NO : Repair the wiring harness.

STEP 17. Voltage measurement at C-143 multivision display connector.

(1) Disconnect the connector, and measure at the wiring harness-side connector.
(2) Voltage between C-143 multivision display connector terminal No.21 and the body earth

OK: System voltage

Q: Is the check result normal?
YES : Go to Step 19.
NO : Go to Step 18.

STEP 18. Check the wiring harness between C-143 multivision display connector terminal No. 21 and C-128 intermediate connector terminal No.9

- Check the power supply lines (battery supply) for open circuit or short circuit.

NOTE: Prior to the wiring harness inspection, check intermediate connector C-133, and repair if necessary.

Q: Is the check result normal?
YES : The trouble can be an intermittent malfunction (Refer to GROUP 00 – How to use Troubleshooting/inspection Service Points – How to Cope with Intermittent Malfunction).
NO : Repair the wiring harness.

STEP 19. Retest the system

Check if the multivision display power is turned ON.

Q: Is the check result normal?
YES : The trouble can be an intermittent malfunction (Refer to GROUP 00 – How to use Troubleshooting/inspection Service Points – How to Cope with Intermittent Malfunction).
NO : Replace the multivision display.

www.cargeek.ir

www.CarGeek.ir

Inspection Procedure 2: No sound is heard. <Vehicles without audio amplifier>

⚠ CAUTION

Whenever the multivision display is replaced, ensure that the power supply circuit and the earthing circuit are normal. (Check that the voltage is 10 V or more.)

Connector: C-144 <LHD>

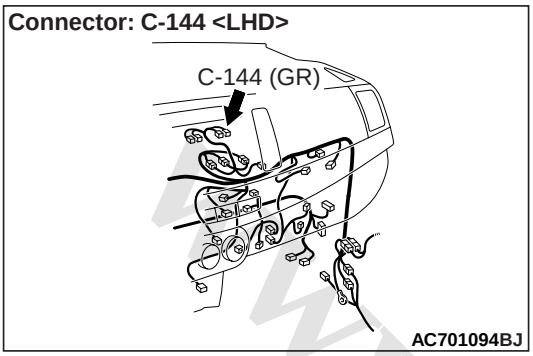

Connector: C-144 <RHD>

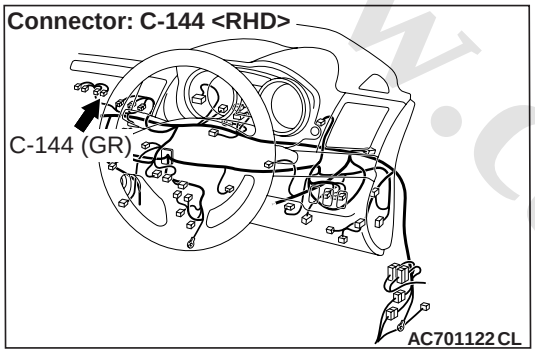

Connectors: E-02, E-12

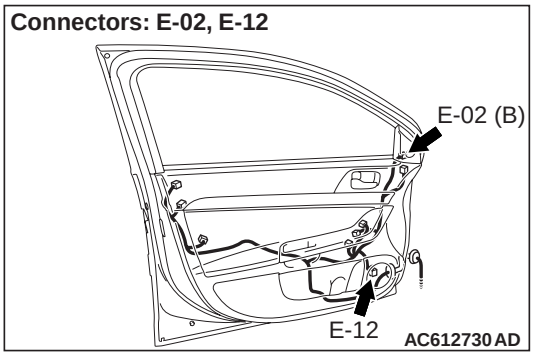

Connectors: E-04, E-10

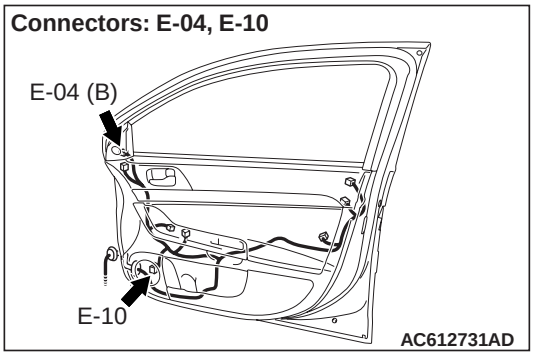

Connector: E-21

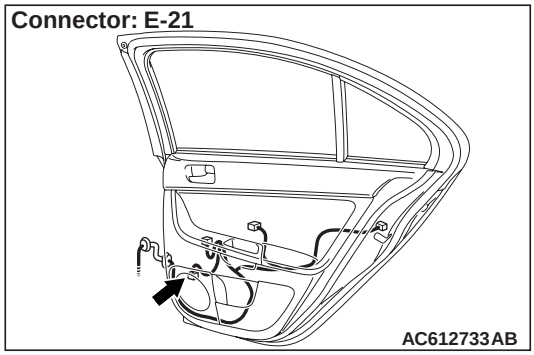

Connector: E-22

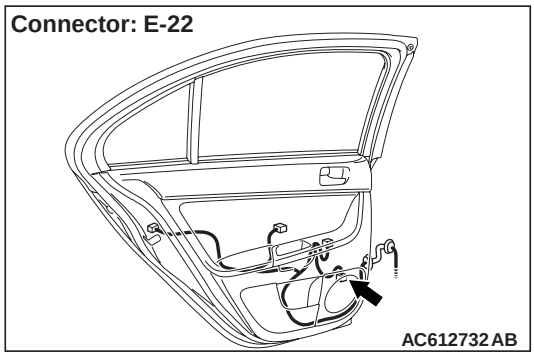

COMMENTS ON TROUBLE SYMPTOM

If the sound is not output, the multivision display may have a problem. In addition, if any of the speakers is short-circuited, the protection circuit inside the multivision display disables all the speakers to sound. Therefore, if all the speakers do not output sound, the speaker circuit may be shorted or the speaker may be defective. In some cases, the sound is output depending on sources, thus use the music server, radio, CD/DVD, and others to check if the sound is output. Also, the option coding information may be inconsistent.

PROBABLE CAUSES

- Malfunction of speaker or tweeter
- Malfunction of multivision display
- Option coding information inconsistency
- Damaged harness wires and connectors

DIAGNOSIS PROCEDURE

STEP 1. Check the multivision display operation.

Q: Check the sources from which the sound is not output.

www.cargeek.ir

www.CarGeek.ir

No sound only from radio : Perform Inspection Procedure 6 "The FM/MW/LM radio broadcasting can not be received."(Refer to .)

No sound only when the CD is played : Perform Inspection Procedure 8 "CD/DVD cannot be played." (Refer to .)

No sound only when the DVD is played : Perform Inspection Procedure 8 "CD/DVD cannot be Played." (Refer to .) Or, perform Inspection Procedure 9 "Image of a DVD is Played, but no Sound is Played."(Refer to .)

Only the sound that is relevant to the hands free function and USB adapter function is not output. <Vehicles with hands free ECU> : Diagnose the hands free ECU. (Refer to .)

Only the sound relevant to USB adapter is not output. <Vehicles with USB box> : Troubleshoot the USB box. (Refer to .)

No sound only when the music server is used : Go to Step 8.

No sound from any of the sources <except vehicles for RUSSIA> : Go to Step 8.

No sound from any of the sources <vehicles for RUSSIA> : Go to Step 2.

STEP 2. ETACS-ECU coding data check

(1) Operate the M.U.T.-III to read the ETACS-ECU option coding information (Refer to GROUP 00 – Coding Table).
(2) Check that the "Number of speaker" is set to "6 speakers or 4 speakers".

Q: Is the check result normal?
YES : Go to Step 3.
NO : Operate the M.U.T.-III to set the option coding "Number of speaker" to "6 speakers", and check the trouble symptom.

STEP 3. Check the MMCS service mode, CAN communication confirmation and coding data

(1) Display the CAN communication confirmation and coding data for the MMCS service mode. (Refer to)
(2) Check if "6SPEAKER(2TWEETER) or 4SPEAKER" is displayed as the number of installed speakers.

Q: Is the check result normal?
YES : Go to Step 4.
NO : Go to Step 5.

STEP 4. Check the service data log for the MMCS service mode.

Display the service data log for the MMCS service mode and check if the service data log for the SP (speaker) is displayed. (Refer to)

Q: Is the service data log for the SP (speaker) displayed?
YES : Go to Step 5.
NO : Go to Step 8.

STEP 5. M.U.T.-III CAN bus diagnostics

Use the M.U.T.-III to diagnose the CAN bus lines.

Q: Is the check result normal?
YES : Go to Step 6.
NO : Repair the CAN bus line.

STEP 6. Check whether the diagnosis code is set.

Check if the diagnosis code is set to the CAN box unit.

(1) Turn the ignition switch from "LOCK" (OFF) position to "ON" position.
(2) Check if diagnosis code is set.

Q: Is the diagnosis code set?
YES : Troubleshoot the MMCS (Refer to).
NO : Go to Step 7.

STEP 7. M.U.T.-III other system diagnosis code

Check if the diagnosis code is set to the ETACS-ECU.

Q: Is the diagnosis code set?
YES : Diagnose the ETACS-ECU (Refer to GROUP 54A – ETACS-ECU – Troubleshooting).
NO : Go to Step 8.

STEP 8. Check the service data log for the MMCS service mode.

(1) Display the service data log for the MMCS service mode. (Refer to)
(2) Check if the service data log for drive and HDD is displayed.

Q: Is the service data log displayed?

www.cargeek.ir

www.CarGeek.ir

YES (The service data log for drive is displayed.) : Perform Inspection Procedure 8 "CD/DVD cannot be Played." (Refer to .) Or, perform Inspection Procedure 9 "Image of a DVD is Played, but no Sound is Played."(Refer to .) Go to Step 9.

YES (The service data log for HDD is displayed.) : Abnormalities relating to high or low temperature may be present. Check if the multivision display can output the sound at the operable temperature. If it cannot output the sound, go to Step 9.

NO : Go to Step 9.

STEP 9. Perform "Network/Connect Line Check" in the MMCS service mode.

(1) Display "Network/Connect Line Check" in the MMCS service mode. (Refer to)
(2) Check if "DVD Drive OK" is displayed.
(3) Check if "HDD Drive OK" is displayed.

Q: Is the check result normal?
YES : Go to Step 10.
NO : Go to Step 14.

STEP 10. Check the following connectors.

Check the following connectors:

- E-12 front door speaker (LH) connector
- E-10 front door speaker (RH) connector
- E-22 rear door speaker (LH) connector
- E-21 rear door speaker (RH) connector
- E-02 tweeter (LH) connector <vehicles with 6-speaker>
- E-04 tweeter (RH) connector <vehicles with 6-speaker>

Q: Are all the connectors in good condition?
YES : Go to Step 11.
NO : Repair the defective connector.

STEP 11. Check the speaker or tweeter.

(1) Remove the speaker or tweeter. Refer to .
(2) Check that the speaker or tweeter outputs the noise when the voltage of 5 V is applied to the speaker or tweeter connector terminal.

Q: Do the speaker or tweeter output the noise?
YES : Go to Step 12.
NO : Replace the speaker or tweeter.

STEP 12. Connector check: C-144 multivision display connector

Q: Is the check result normal?
YES : Go to Step 13.
NO : Repair the defective connector.

STEP 13. Check the wiring harness between the speaker or tweeter connector terminal and the multivision display connector terminal.

Check the communication lines for short circuit.

- <Front door speaker (LH), tweeter (LH)> Check the wiring harness between E-12 front door speaker (LH) connector terminal No.1, 2 or E-02 tweeter (LH) connector terminal No.2, 1 and C-144 multivision display connector terminal No.12, 3.

NOTE: Prior to the wiring harness inspection, check intermediate connectors C-126 and C-139, and repair if necessary.

- <Front door speaker (RH), tweeter (RH)> Check the wiring harness between E-10 front door speaker (RH) connector terminal No.1, 2 or E-04 tweeter (RH) connector terminal No.2, 1 and C-144 multivision display connector terminal No.15, 7.

NOTE: Prior to the wiring harness inspection, check intermediate connectors C-112 and C-139, and repair if necessary.

- <Rear door speaker (LH)> Check the wiring harness between E-22 rear door speaker (LH) connector terminal No.1, 2 and C-144 multivision display connector terminal No.11, 2.

NOTE: Prior to the wiring harness inspection, check intermediate connectors C-28, C-139 and D-21, and repair if necessary.

- <Rear door speaker (RH)> Check the wiring harness between E-21 rear door speaker (RH) connector terminal No.1, 2 and C-144 multivision display connector terminal No.16, 8.

NOTE: Prior to the wiring harness inspection, check intermediate connectors C-16, C-139 and D-01, and repair if necessary.

Q: Is the check result normal?
YES : Go to Step 14.
NO : Repair the wiring harness.

STEP 14. Retest the system

Check if the sound is output from all the speakers.

Q: Is the check result normal?
YES : The trouble can be an intermittent malfunction (Refer to GROUP 00 – How to use Troubleshooting/inspection Service Points – How to Cope with Intermittent Malfunction).
NO : Replace the multivision display.

www.cargeek.ir

www.CarGeek.ir

Inspection Procedure 2: No sound is heard. <Vehicles with audio amplifier>

⚠ CAUTION

Whenever the multivision display is replaced, ensure that the power supply circuit and the earthing circuit are normal. (Check that the voltage is 10 V or more.)

Connectors: C-141, C-144 <LHD>

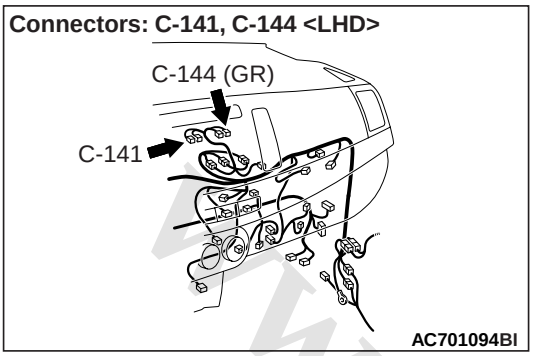

Connectors: C-141, C-144 <RHD>

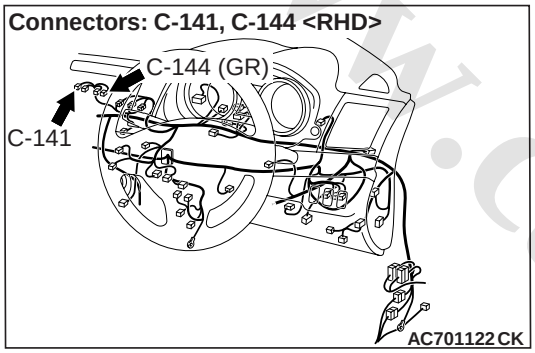

Connectors: D-26, D-27

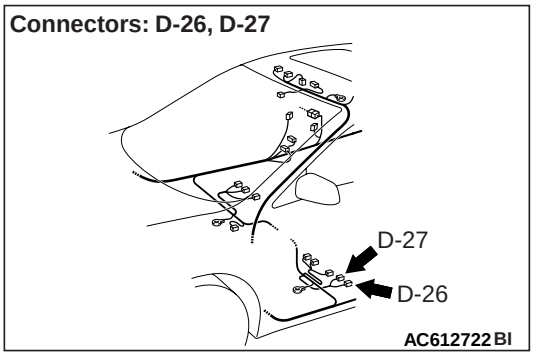

Connectors: E-02, E-12

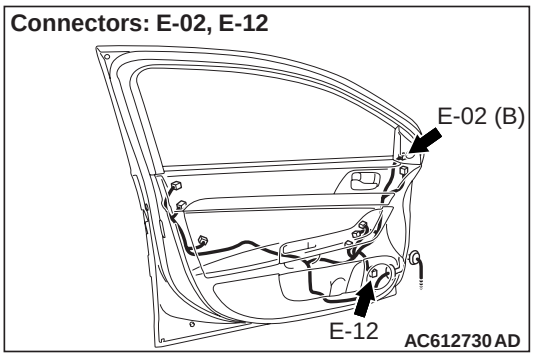

Connectors: E-04, E-10

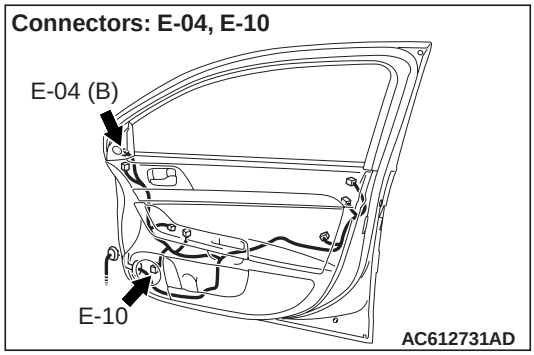

Connector: E-21

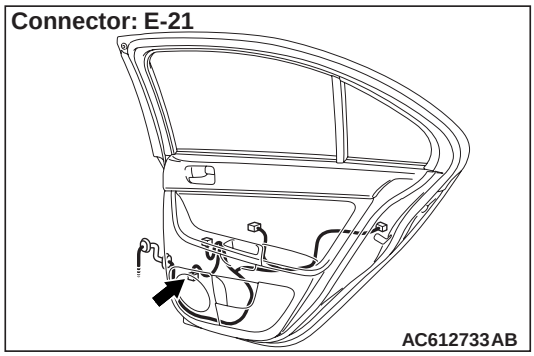

Connector: E-22

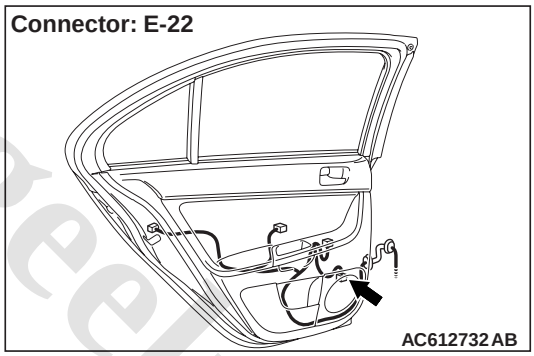

Connector: F-25 <LANCER SPORTBACK>

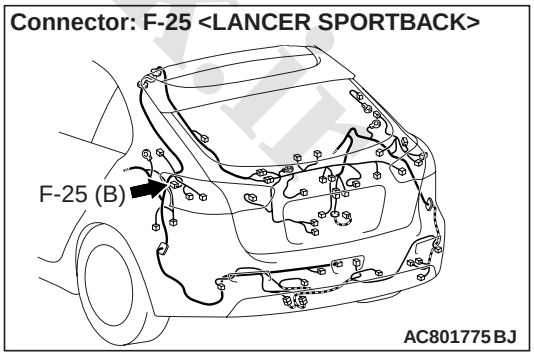

www.cargeek.ir

www.CarGeek.ir

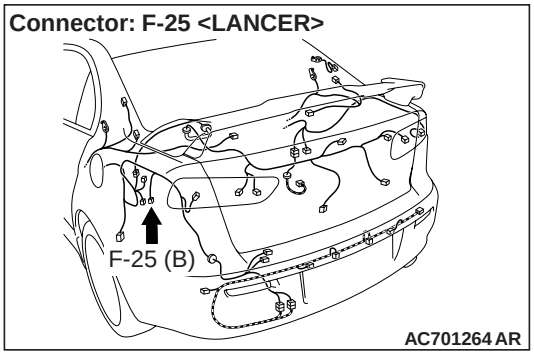

COMMENTS ON TROUBLE SYMPTOM

If the audio sound is not output, the multivision display, audio amplifier, or power supply circuit of audio amplifier may have a problem. In addition, if any of the speakers is short-circuited, the protection circuit inside the multivision display disables all the speakers to sound. Therefore, if all the speakers do not output sound, the speaker circuit may be shorted or the speaker may be defective. In some cases, the sound is output depending on sources, thus use the music server, radio, CD/DVD, and others to check if the sound is output. Also, the option coding information may be inconsistent.

PROBABLE CAUSES

- Malfunctions of multivision display
- Malfunction of audio amplifier
- Malfunction of speaker or tweeter
- Option coding information inconsistency
- Damaged wiring harness and connectors

DIAGNOSIS PROCEDURE

STEP 1. Check the multivision display operation.

Q: Check the sources from which the sound is not output.

No sound only from radio : Perform Inspection Procedure 6 "The FM/MW/LM radio broadcasting can not be received."(Refer to .)

No sound only when the CD is played : Perform Inspection Procedure 8 "CD/DVD cannot be played." (Refer to .)

No sound only when the DVD is played : Perform Inspection Procedure 8 "CD/DVD cannot be Played." (Refer to .) Or, perform Inspection Procedure 9 "Image of a DVD is Played, but no Sound is Played."(Refer to .)

Only the sound that is relevant to the hands free function and USB adapter function is not output. <Vehicles with hands free ECU> : Diagnose the hands free ECU. (Refer to .)

Only the sound relevant to USB adapter is not output. <Vehicles with USB box> : Troubleshoot the USB box. (Refer to .)

No sound only when the music server is used : Go to Step 8.

No sound from any of the sources <except vehicles for RUSSIA> : Go to Step 8.

No sound from any of the sources <vehicles for RUSSIA> : Go to Step 2.

STEP 2. ETACS-ECU coding data check

(1) Operate the M.U.T.-III to read the ETACS-ECU option coding information (Refer to GROUP 00 – Coding Table).

(2) Check that the "Number of speaker" is set to "Premium".

Q: Is the check result normal?

YES : Go to Step 3.

NO : Operate the M.U.T.-III to set the option coding "Number of speaker" to "Premium", and check the trouble symptom.

STEP 3. Check the MMCS service mode, CAN communication confirmation and coding data

(1) Display the CAN communication confirmation and coding data for the MMCS service mode. (Refer to)

(2) Check if "PREMIUM" is displayed as the number of installed speakers.

Q: Is the check result normal?

YES : Go to Step 4.

NO : Go to Step 5.

www.cargeek.ir

www.CarGeek.ir

STEP 4. Check the service data log for the MMCS service mode.

Display the service data log for the MMCS service mode and check if the service data log for the SP (speaker) is displayed. (Refer to)

Q: Is the service data log for the SP (speaker) displayed?
YES : Go to Step 5.
NO : Go to Step 8.

STEP 5. M.U.T.-III CAN bus diagnostics

Use the M.U.T.-III to diagnose the CAN bus lines.

Q: Is the check result normal?
YES : Go to Step 6.
NO : Repair the CAN bus line.

STEP 6. Check whether the diagnosis code is set.

Check if the diagnosis code is set to the CAN box unit.

(1) Turn the ignition switch from "LOCK" (OFF) position to "ON" position.
(2) Check if diagnosis code is set.

Q: Is the diagnosis code set?
YES : Troubleshoot the MMCS (Refer to).
NO : Go to Step 7.

STEP 7. M.U.T.-III other system diagnosis code

Check if the diagnosis code is set to the ETACS-ECU.

Q: Is the diagnosis code set?
YES : Diagnose the ETACS-ECU (Refer to GROUP 54A – ETACS-ECU – Troubleshooting).
NO : Go to Step 8.

STEP 8. Check the service data log for the MMCS service mode.

(1) Display the service data log for the MMCS service mode. (Refer to)
(2) Check if the service data log for drive and HDD is displayed.

Q: Is the service data log displayed?
YES (The service data log for drive is displayed.) : Perform Inspection Procedure 8 "CD/DVD cannot be Played." (Refer to .) Or, perform Inspection Procedure 9 "Image of a DVD is Played, but no Sound is Played."(Refer to .) Go to Step 9.
YES (The service data log for HDD is displayed.) : Abnormalities relating to high or low temperature may be present. Check if the multivision display can output the sound at the operable temperature. If it cannot output the sound, go to Step 9.
YES (The service data log for AMP is displayed.) : Go to Step 9.
NO : Go to Step 9.

STEP 9. Perform "Network/Connect Line Check" in the MMCS service mode.

(1) Display "Network/Connect Line Check" in the MMCS service mode. (Refer to)
(2) Check if "DVD Drive OK" is displayed.
(3) Check if "HDD Drive OK" is displayed.
(4) Check if "Premium Audio OK" is displayed.

Q: Is the check result normal?
YES : Go to Step 10.
NO : Go to Step 21.

STEP 10. Connector check: D-26, D-27 audio amplifier connector

Q: Is the check result normal?
YES : Go to Step 11.
NO : Repair the defective connector.

STEP 11. Resistance measurement at D-26 audio amplifier connector

(1) Disconnect the connector, and measure at the wiring harness side.
(2) Measure the resistance between D-26 audio amplifier connector terminal No.24 and the body earth.

OK: Continuity exists (2 Ω or less)

(3) Measure the resistance between D-26 audio amplifier connector terminal No.31 and the body earth.

OK: Continuity exists (2 Ω or less)

(4) Measure the resistance between D-26 audio amplifier connector terminal No.32 and the body earth.

OK: Continuity exists (2 Ω or less)

Q: Is the check result normal?

www.cargeek.ir

www.CarGeek.ir

YES : Go to Step 13.
NO : Go to Step 12.

STEP 12. Check the wiring harness between the D-26 audio amplifier connector terminal No.24, 31, 32 and the body earth

- Check the earth wires for open circuit.

Q: Is the check result normal?
YES : Go to Step 13.
NO : Repair the wiring harness.

STEP 13. Voltage measurement at D-26 audio amplifier connector

(1) Disconnect the connector, and measure at the wiring harness side.
(2) Voltage between D-26 audio amplifier connector terminal No.25 and the body earth

OK: System voltage

(3) Voltage between D-26 audio amplifier connector terminal No.35 and the body earth

OK: System voltage

(4) Voltage between D-26 audio amplifier connector terminal No.36 and the body earth

OK: System voltage

Q: Is the check result normal?
YES : Go to Step 15.
NO : Go to Step 14.

STEP 14. Check the wiring harness between D-26 audio amplifier connector terminal No.25, 35, 36 and fusible link No.36 <petrol> or 38 <diesel>.

- Check the power supply lines for open circuit and short circuit.

NOTE: Prior to the wiring harness inspection, check intermediate connector C-31, and repair if necessary.

Q: Is the check result normal?
YES : Go to Step 15.
NO : Repair the wiring harness.

STEP 15. Connector check: C-141, C-144 multivision display connector

Q: Is the check result normal?
YES : Go to Step 16.
NO : Repair the defective connector.

STEP 16. Check the wiring harness between C-144 multivision display connector terminal No.6 or C-141 multivision display connector terminal No.82 and D-26 audio amplifier connector No.34 or D-27 audio amplifier connector No.3.

- Check the communication line for open circuit and short circuit.

NOTE: Prior to the wiring harness inspection, check intermediate connectors C-17 and C-140, and repair if necessary.

Q: Is the check result normal?
YES : Go to Step 17.
NO : Repair the wiring harness.

STEP 17. Check the following connectors.

Check the following connectors:

- E-12 front door speaker (LH) connector
- E-10 front door speaker (RH) connector
- E-22 rear door speaker (LH) connector
- E-21 rear door speaker (RH) connector
- E-02 tweeter (LH) connector
- E-04 tweeter (RH) connector
- F-25 sub woofer connector

Q: Are all the connectors in good condition?
YES : Go to Step 18.
NO : Repair the defective connector.

STEP 18. Check the speaker, tweeter or subwoofer.

(1) Remove the speaker, tweeter or subwoofer. Refer to .
(2) Check that the speaker or tweeter outputs the noise when the voltage of 5 V is applied to the speaker or tweeter connector terminal. <speaker or tweeter>
(3) Check that the subwoofer outputs the noise when the voltage of 5 V is applied to the subwoofer connector terminal. <subwoofer>

Q: Do the speaker, tweeter or subwoofer output the noise?
YES : Go to Step 19.
NO : Replace the speaker, tweeter or subwoofer.

www.cargeek.ir

STEP 19. Check the wiring harness between the speaker, tweeter or subwoofer connector terminal and the audio amplifier connector terminal.

Check the communication lines for short circuit.

- <Front door speaker (LH)> Check the wiring harness between E-12 front door speaker (LH) connector terminal No.1, 2 and D-26 audio amplifier connector terminal No.28, 38.

NOTE: Prior to the wiring harness inspection, check intermediate connectors C-17 and C-126, and repair if necessary.

- <Front door speaker (RH)> Check the wiring harness between E-10 front door speaker (RH) connector terminal No.1, 2 and D-26 audio amplifier connector terminal No.27, 37.

NOTE: Prior to the wiring harness inspection, check intermediate connectors C-17 and C-112, and repair if necessary.

- <Rear door speaker (LH)> Check the wiring harness between E-22 rear door speaker (LH) connector terminal No.1, 2 and D-27 audio amplifier connector terminal No.1, 7.

NOTE: Prior to the wiring harness inspection, check intermediate connector D-21, and repair if necessary.

- <Rear door speaker (RH)> Check the wiring harness between E-21 rear door speaker (RH) connector terminal No.1, 2 and D-27 audio amplifier connector terminal No.2, 8.

NOTE: Prior to the wiring harness inspection, check intermediate connector D-01, and repair if necessary.

- <Tweeter (LH)> Check the wiring harness between E-02 tweeter (LH) connector terminal No.1, 2 and D-27 audio amplifier connector terminal No.14, 6.

NOTE: Prior to the wiring harness inspection, check intermediate connectors C-17 and C-126, and repair if necessary.

- <Tweeter (RH)> Check the wiring harness between E-04 tweeter (RH) connector terminal No.1, 2 and D-27 audio amplifier connector terminal No.5, 13.

NOTE: Prior to the wiring harness inspection, check intermediate connectors C-17 and C-112, and repair if necessary.

- <Sub woofer> Check the wiring harness between E-25 subwoofer connector terminal No.1, 2, 3, 4 and D-26 audio amplifier connector terminal No.30, 22, 29, 21.

NOTE: Prior to the wiring harness inspection, check intermediate connector D-17, and repair if necessary.

Q: Is the check result normal?
YES : Go to Step 20.
NO : Repair the wiring harness.

STEP 20. Check the wiring harness between C-144 multivision display connector terminal No.3, 7, 12, 15 and D-27 audio amplifier connector No.12, 11, 4, 10.

- Check the communication lines for short circuit.

NOTE: Prior to the wiring harness inspection, check intermediate connectors C-17 and C-139, and repair if necessary.

Q: Is the check result normal?
YES : Go to Step 21.
NO : Repair the wiring harness.

STEP 21. Retest the system

Check if the sound is output from all the speakers.

Q: Is the check result normal?
YES : The trouble can be an intermittent malfunction (Refer to GROUP 00 – How to use Troubleshooting/inspection Service Points – How to Cope with Intermittent Malfunction).
NO : Go to Step 22.

STEP 22. Replace the audio amplifier temporarily, and check the trouble symptom.

Replace the audio amplifier temporarily, and check that the sound is output from all the speakers.

Q: Is the check result normal?
YES : Replace the audio amplifier.
NO : Replace the multivision display.

www.cargeek.ir

www.CarGeek.ir

Inspection Procedure 3: Not sound is heard from one of the speakers. <Except vehicles for RUSSIA (vehicles without audio amplifier)>

⚠ CAUTION
Whenever the multivision display is replaced, ensure that the power supply circuit and the earthing circuit are normal. (Check that the voltage is 10 V or more.)

Connector: C-144 <LHD>

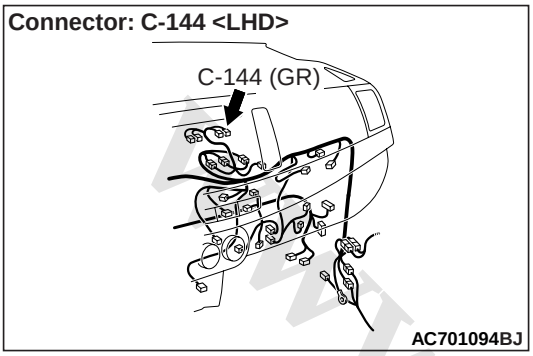

Connector: C-144 <RHD>

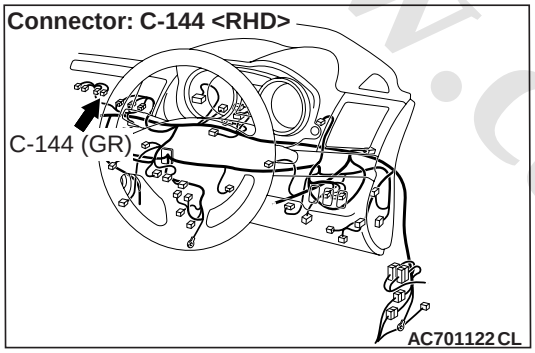

Connectors: E-02, E-12

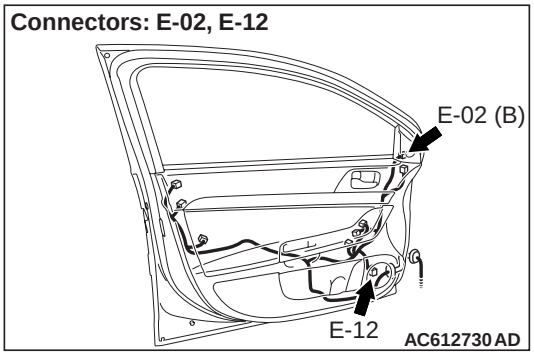

Connectors: E-04, E-10

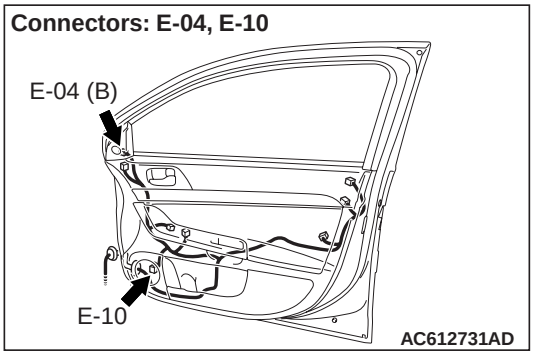

Connector: E-21

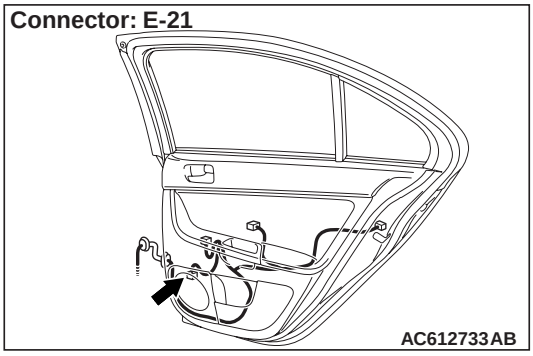

Connector: E-22

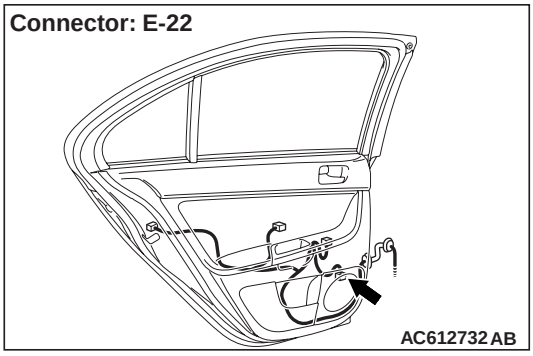

COMMENTS ON TROUBLE SYMPTOM

If the sound is not heard from one of the speakers or tweeters, the speaker, tweeter, multivision display or communication line from the multivision display to the speaker may have a problem.

PROBABLE CAUSES

- Malfunction of speaker or tweeter
- Malfunction of multivision display
- Damaged harness wires and connectors

DIAGNOSIS PROCEDURE

STEP 1. Checking with audio speaker check

Perform the audio speaker check, and check which speaker does not output the sound. Refer to .

NOTE: In the following procedure, check the speaker or tweeter that is abnormal.

Q: Is the check result normal?

YES : The trouble can be an intermittent malfunction (Refer to GROUP 00 – How to use Troubleshooting/inspection Service Points – How to Cope with Intermittent Malfunction).

NO (Either a speaker is abnormal) : Go to Step 2.

www.cargeek.ir

www.CarGeek.ir

STEP 2. Check the following connectors.

Check the following connectors:

- E-12 front door speaker (LH) connector
- E-10 front door speaker (RH) connector
- E-22 rear door speaker (LH) connector
- E-21 rear door speaker (RH) connector
- E-02 tweeter (LH) connector <vehicles with 6-speaker>
- E-04 tweeter (RH) connector <vehicles with 6-speaker>

Q: Are all the connectors in good condition?

YES : Go to Step 3.
NO : Repair the defective connector.

STEP 3. Check the speaker or tweeter.

(1) Remove the speaker or tweeter (Refer to).
(2) Check that the speaker or tweeter outputs the noise when the voltage of 5 V is applied to the speaker or tweeter connector terminal.

Q: Is the check result normal?

YES : Go to Step 4.
NO : Replace the speaker or tweeter.

STEP 4. Connector check: C-144 multivision display connector.

Q: Is the check result normal?

YES : Go to Step 5.
NO : Repair the defective connector.

STEP 5. Check the wire harness between the speaker or tweeter connector terminal and the multivision display connector terminal.

Check the communication lines for open circuit or short circuit.

- <Front door speaker (LH)> Check the wire harness between E-12 front door speaker (LH) connector terminal No.1, 2 and C-144 multivision display connector terminal No.12, 3.

NOTE: Prior to the wiring harness inspection, check intermediate connectors C-126 and C-139, and repair if necessary.

- <Front door speaker (RH)> Check the wire harness between E-10 front door speaker (RH) connector terminal No.1, 2 and C-144 multivision display connector terminal No.15, 7.

NOTE: Prior to the wiring harness inspection, check intermediate connectors C-112 and C-139, and repair if necessary.

- <Rear door speaker (LH)> Check the wire harness between E-22 rear door speaker (LH) connector terminal No.1, 2 and C-144 multivision display connector terminal No.11, 2.

NOTE: Prior to the wiring harness inspection, check intermediate connectors C-139, C-28, D-21, and repair if necessary.

- <Rear door speaker (RH)> Check the wire harness between E-21 rear door speaker (RH) connector terminal No.1, 2 and C-144 multivision display connector terminal No.16, 8.

NOTE: Prior to the wiring harness inspection, check intermediate connectors C-139, C-16, D-01, and repair if necessary.

- <Tweeter (LH)> Check the wire harness between E-02 tweeter (LH) connector terminal No.2, 1 and C-144 multivision display connector terminal No.12, 3.

NOTE: Prior to the wiring harness inspection, check intermediate connectors C-126 and C-139, and repair if necessary.

- <Tweeter (RH)> Check the wire harness between E-04 tweeter (RH) connector terminal No.2, 1 and C-144 multivision display connector terminal No.15, 7.

NOTE: Prior to the wiring harness inspection, check intermediate connectors C-112 and C-139, and repair if necessary.

Q: Is the check result normal?

YES : Go to Step 6.
NO : Repair the wiring harness.

www.cargeek.ir

www.CarGeek.ir

STEP 6. Check of the troubles

Check if the sound is output from all the speakers normally.

Q: Is the check result normal?

YES : The trouble can be an intermittent malfunction (Refer to GROUP 00 – How to use Troubleshooting/inspection Service Points – How to Cope with Intermittent Malfunction).

NO : Go to Step 7.

STEP 7. Check of the troubles

Temporarily replace the multivision display, and check if the sound is output.

Q: Is the check result normal?

YES : Replace the multivision display.

NO : Replace the faulty speaker or tweeter.

Inspection Procedure 3: Not sound is heard from one of the speakers. <Vehicles for RUSSIA (vehicles without audio amplifier)>

⚠ CAUTION

Whenever the multivision display is replaced, ensure that the power supply circuit and the earthing circuit are normal. (Check that the voltage is 10 V or more.)

Connector: C-144 <LHD>

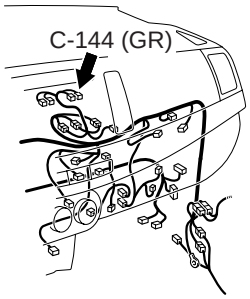

AC701094BJ

Connector: C-144 <RHD>

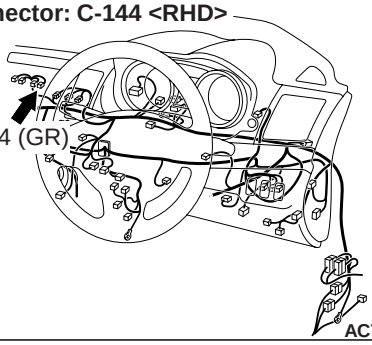

AC701122CL

Connectors: E-02, E-12

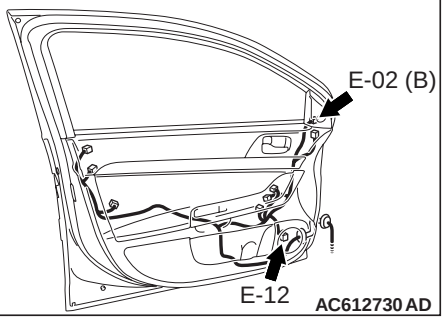

AC612730AD

Connectors: E-04, E-10

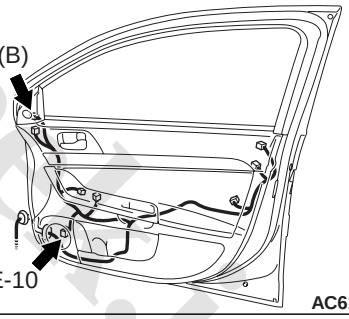

AC612731AD

Connector: E-21

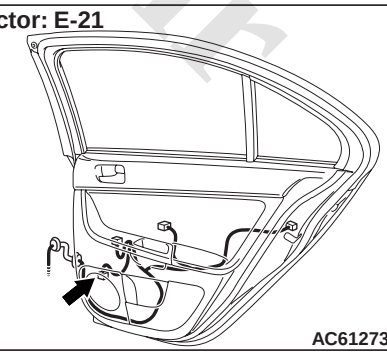

AC612733AB

www.cargeek.ir

www.CarGeek.ir

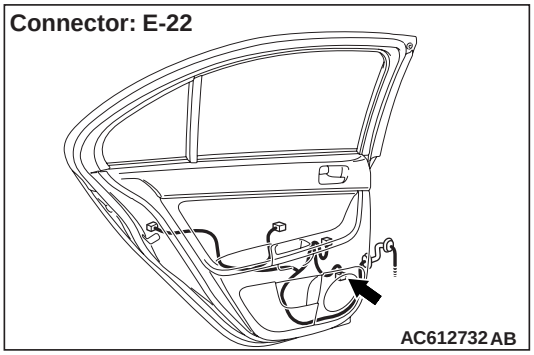

COMMENTS ON TROUBLE SYMPTOM

If the sound is not heard from one of the speakers or tweeters, the speaker, tweeter, multivision display or communication line from the multivision display to the speaker may have a problem. Also, the option coding information may be inconsistent.

PROBABLE CAUSES

- Malfunction of speaker or tweeter
- Malfunction of multivision display
- Option coding information inconsistency
- Damaged harness wires and connectors

DIAGNOSIS PROCEDURE

STEP 1. ETACS-ECU coding data check

(1) Operate the M.U.T.-III to read the ETACS-ECU option coding information (Refer to GROUP 00 – Coding List).
(2) Check that the result matches with the number of speakers ("6 speakers" or "4 speakers") specified by "Number of speaker."

Q: Is the check result normal?
YES : Go to Step 2.
NO : Operate the M.U.T.-III to set the option coding "Number of speaker" to "6 speakers" or "4 speakers", and check the trouble symptom.

STEP 2. Check the MMCS service mode, CAN communication confirmation and coding data

(1) Display the CAN communication confirmation and coding data for the MMCS service mode. (Refer to .)
(2) Check if "6SPEAKER(2TWEETER) or 4SPEAKER" is displayed as the number of installed speakers.

Q: Is the check result normal?
YES : Go to Step 3.
NO : Go to Step 4.

STEP 3. Check the service data log for the MMCS service mode.

Display the service data log for the MMCS service mode and check if the service data log for the SP (speaker) is displayed. (Refer to .)

Q: Is the service data log for the SP (speaker) displayed?
YES : Go to Step 4.
NO : Go to Step 7.

STEP 4. M.U.T.-III CAN bus diagnostics

Use the M.U.T.-III to diagnose the CAN bus lines.

Q: Is the check result normal?
YES : Go to Step 5.
NO : Repair the CAN bus line.

STEP 5. Check whether the diagnosis code is set.

Check if the diagnosis code is set to the CAN box unit.
(1) Erase the diagnosis code.
(2) Turn the ignition switch from "LOCK" (OFF) position to "ON" position.
(3) Check if diagnosis code is set.

Q: Is the diagnosis code set?
YES : Troubleshoot the MMCS (Refer to).
NO : Go to Step 6.

STEP 6. M.U.T.-III other system diagnosis code

Check if the diagnosis code is set to the ETACS-ECU.

Q: Is the diagnosis code set?
YES : Diagnose the ETACS-ECU (Refer to GROUP 54A – ETACS-ECU – Troubleshooting).
NO : Go to Step 7.

STEP 7. Checking with audio speaker check

Perform the audio speaker check, and check which speaker does not output the sound. Refer to .

NOTE: In the following procedure, check the speaker or tweeter that is abnormal.

Q: Is the check result normal?
YES : The trouble can be an intermittent malfunction (Refer to GROUP 00 – How to use Troubleshooting/inspection Service Points – How to Cope with Intermittent Malfunction).
NO (Either a speaker is abnormal) : Go to Step 8.

www.cargeek.ir

www.CarGeek.ir

STEP 8. Check the following connectors.

Check the following connectors:

- E-12 front door speaker (LH) connector
- E-10 front door speaker (RH) connector
- E-22 rear door speaker (LH) connector
- E-21 rear door speaker (RH) connector
- E-02 tweeter (LH) connector <vehicles with 6-speaker>
- E-04 tweeter (RH) connector <vehicles with 6-speaker>

Q: Are all the connectors in good condition?

YES : Go to Step 9.
NO : Repair the defective connector.

STEP 9. Check the speaker or tweeter.

(1) Remove the speaker or tweeter (Refer to).
(2) Check that the speaker or tweeter outputs the noise when the voltage of 5 V is applied to the speaker or tweeter connector terminal.

Q: Is the check result normal?

YES : Go to Step 10.
NO : Replace the speaker or tweeter.

STEP 10. Connector check: C-144 multivision display connector.

Q: Is the check result normal?

YES : Go to Step 11.
NO : Repair the defective connector.

STEP 11. Check the wire harness between the speaker or tweeter connector terminal and the multivision display connector terminal.

Check the communication lines for open circuit or short circuit.

- <Front door speaker (LH)> Check the wire harness between E-12 front door speaker (LH) connector terminal No.1, 2 and C-144 multivision display connector terminal No.12, 3.

NOTE: Prior to the wiring harness inspection, check intermediate connectors C-126 and C-139, and repair if necessary.

- <Front door speaker (RH)> Check the wire harness between E-10 front door speaker (RH) connector terminal No.1, 2 and C-144 multivision display connector terminal No.15, 7.

NOTE: Prior to the wiring harness inspection, check intermediate connectors C-112 and C-139, and repair if necessary.

- <Rear door speaker (LH)> Check the wire harness between E-22 rear door speaker (LH) connector terminal No.1, 2 and C-144 multivision display connector terminal No.11, 2.

NOTE: Prior to the wiring harness inspection, check intermediate connectors C-139, C-28, D-21, and repair if necessary.

- <Rear door speaker (RH)> Check the wire harness between E-21 rear door speaker (RH) connector terminal No.1, 2 and C-144 multivision display connector terminal No.16, 8.

NOTE: Prior to the wiring harness inspection, check intermediate connectors C-139, C-16, D-01, and repair if necessary.

- <Tweeter (LH)> Check the wire harness between E-02 tweeter (LH) connector terminal No.2, 1 and C-144 multivision display connector terminal No.12, 3.

NOTE: Prior to the wiring harness inspection, check intermediate connectors C-126 and C-139, and repair if necessary.

- <Tweeter (RH)> Check the wire harness between E-04 tweeter (RH) connector terminal No.2, 1 and C-144 multivision display connector terminal No.15, 7.

NOTE: Prior to the wiring harness inspection, check intermediate connectors C-112 and C-139, and repair if necessary.

Q: Is the check result normal?

YES : Go to Step 12.
NO : Repair the wiring harness.

www.cargeek.ir

www.CarGeek.ir

STEP 12. Check of the troubles

Check if the sound is output from all the speakers normally.

Q: Is the check result normal?

YES : The trouble can be an intermittent malfunction (Refer to GROUP 00 – How to use Troubleshooting/inspection Service Points – How to Cope with Intermittent Malfunction).

NO : Go to Step 13.

STEP 13. Check of the troubles

Temporarily replace the multivision display, and check if the sound is output.

Q: Is the check result normal?

YES : Replace the multivision display.

NO : Replace the faulty speaker or tweeter.

Inspection Procedure 3: Not sound is heard from one of the speakers. <Except vehicles for RUSSIA (vehicles with audio amplifier)>

⚠ CAUTION

Whenever the multivision display is replaced, ensure that the power supply circuit and the earthing circuit are normal. (Check that the voltage is 10 V or more.)

Connector: C-144 <LHD>

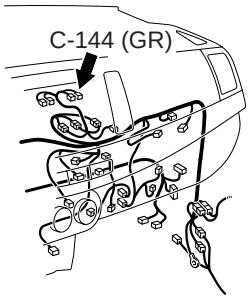

AC701094BJ

Connector: C-144 <RHD>

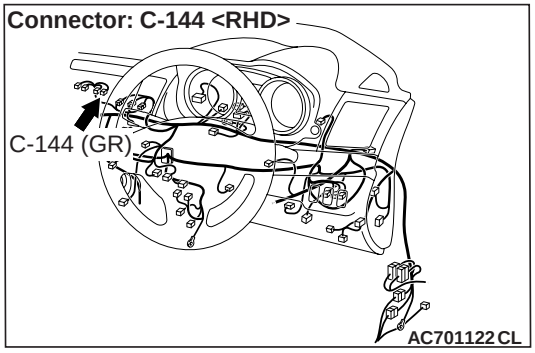

AC701122CL

Connectors: D-26, D-27

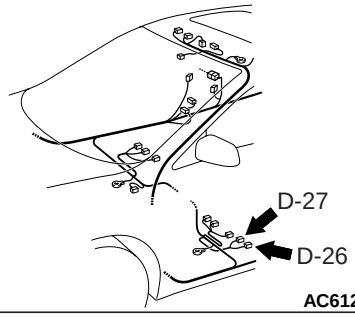

AC612722BI

Connectors: E-02, E-12

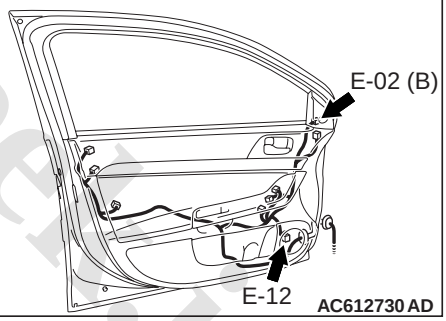

AC612730AD

Connectors: E-04, E-10

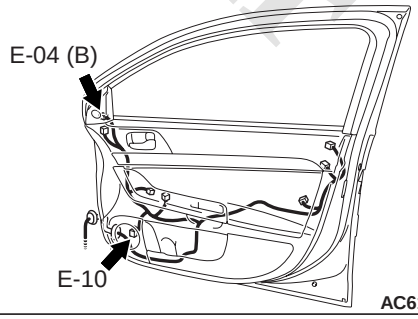

AC612731AD

www.cargeek.ir

www.CarGeek.ir

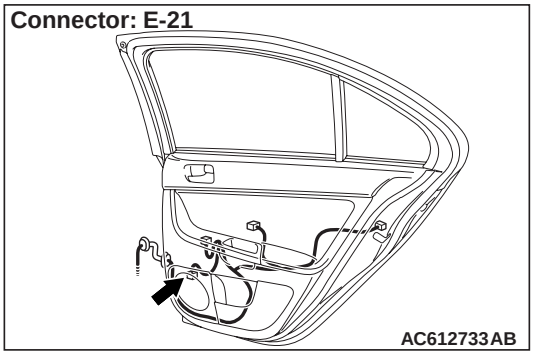

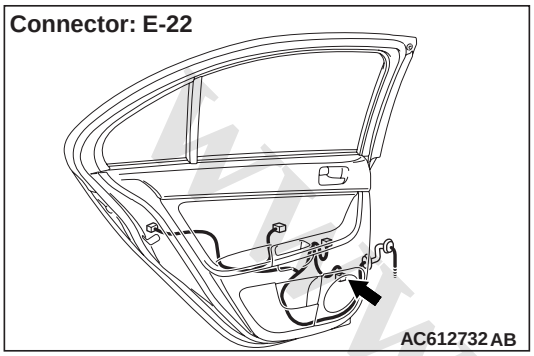

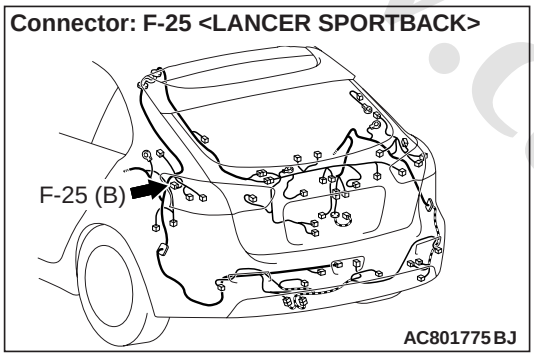

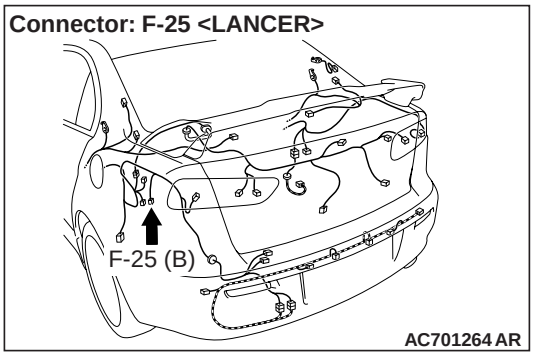

COMMENTS ON TROUBLE SYMPTOM

If the sound is not heard from one of the speakers, the speaker, multivision display, audio amplifier, communication line from the multivision display to the audio amplifier, or communication line from the audio amplifier to the speaker may have a problem.

PROBABLE CAUSES

- Malfunction of speaker
- Malfunctions of multivision display
- Malfunction of audio amplifier
- Damaged harness wires and connectors

DIAGNOSIS PROCEDURE

STEP 1. Checking with audio speaker check

Perform the audio speaker check, and check which speaker does not output the sound (Refer to).

NOTE: In the following procedure, check the speaker, tweeter or subwoofer that is abnormal.

Q: Is the check result normal?

YES (normal for all) : The trouble can be an intermittent malfunction (Refer to GROUP 00 – How to use Troubleshooting/inspection Service Points – How to Cope with Intermittent Malfunction).

NO (Either a speaker, a tweeter or a subwoofer is abnormal) : Go to Step 2.

STEP 2. Check the following connectors.

Check the following connectors:

- E-12 front door speaker (LH) connector
- E-10 front door speaker (RH) connector
- E-22 rear door speaker (LH) connector
- E-21 rear door speaker (RH) connector
- E-02 tweeter (LH) connector
- E-04 tweeter (RH) connector
- F-25 sub woofer connector

Q: Are all the connectors in good condition?

YES : Go to Step 3.

NO : Repair the defective connector.

STEP 3. Check the speaker, tweeter or subwoofer.

(1) Remove the speaker, tweeter or subwoofer. Refer to .

(2) Check that the speaker or tweeter outputs the noise when the voltage of 5 V is applied to the speaker or tweeter connector terminal. <speaker or tweeter>

(3) Check that the subwoofer outputs the noise when the voltage of 5 V is applied to the subwoofer connector terminal. <subwoofer>

Q: Is the check result normal?

YES : Go to Step 4.

NO : Replace the speaker, tweeter or subwoofer.

STEP 4. Connector check: D-26 <front door speaker or sub woofer>, D-27 <tweeter or rear door speaker> audio amplifier connector

Q: Is the check result normal?

www.cargeek.ir

www.CarGeek.ir

YES : Go to Step 5.
NO : Repair the defective connector.

www.cargeek.ir

www.cargeek.ir

www.CarGeek.ir

STEP 5. Check the wire harness between the speaker or tweeter connector terminal and the audio amplifier connector terminal.

Check the communication lines for open circuit or short circuit.

- <Front door speaker (LH)> Check the wire harness between E-12 front door speaker (LH) connector terminal No.1, 2 and D-26 audio amplifier connector terminal No.28, 38.

NOTE: Prior to the wiring harness inspection, check intermediate connectors C-17 and C-126, and repair if necessary.

- <Front door speaker (RH)> Check the wire harness between E-10 front door speaker (RH) connector terminal No.1, 2 and D-26 audio amplifier connector terminal No.27, 37.

NOTE: Prior to the wiring harness inspection, check intermediate connectors C-17 and C-112, and repair if necessary.

- <Rear door speaker (LH)> Check the wire harness between E-22 rear door speaker (LH) connector terminal No.1, 2 and D-27 audio amplifier connector terminal No.1, 7.

NOTE: Prior to the wiring harness inspection, check intermediate connector D-21, and repair if necessary.

- <Rear door speaker (RH)> Check the wire harness between E-21 rear door speaker (RH) connector terminal No.1, 2 and D-27 audio amplifier connector terminal No.2, 8.

NOTE: Prior to the wiring harness inspection, check intermediate connector D-01, and repair if necessary.

- <Tweeter (LH)> Check the wire harness between E-02 tweeter (LH) connector terminal No.1, 2 and D-27 audio amplifier connector terminal No.14, 6.

NOTE: Prior to the wiring harness inspection, check intermediate connectors C-17 and C-126, and repair if necessary.

- <Tweeter (RH)> Check the wire harness between E-04 tweeter (RH) connector terminal No.1, 2 and D-27 audio amplifier connector terminal No.13, 5.

NOTE: Prior to the wiring harness inspection, check intermediate connectors C-17 and C-112, and repair if necessary.

- <Subwoofer> Check the wire harness between F-25 subwoofer connector terminal No.1, 2, 3, 4 and D-26 audio amplifier connector terminal No.30, 22, 29, 21.

NOTE: Prior to the wiring harness inspection, check intermediate connector D-17, and repair if necessary.

Q: Is the check result normal?
YES <front door speaker> : Go to Step 6.
YES <except front door speaker> : Go to Step 8.
NO (harness wire is abnormal) : Repair the wiring harness.

STEP 6. Connector check: C-144 multivision display connector

Q: Is the check result normal?
YES : Go to Step 7.
NO : Repair the defective connector.

STEP 7. Check the harness wire between C-144 multivision display connector terminal No.3, 7, 12, 15 and D-27 audio amplifier connector No.12, 11, 4, 10.

- Check the communication lines for open circuit or short circuit.

NOTE: Prior to the wiring harness inspection, check intermediate connectors C-139 and C-17, and repair if necessary.

Q: Is the check result normal?
YES : Check the trouble symptom, go to Step 8.
NO : Repair the wiring harness.

STEP 8. Replace the multivision display temporarily, and check the trouble symptom.

Replace the multivision display temporarily, and check that the sound is output from the speaker.

Q: Is the check result normal?
YES : Replace the multivision display.
NO : Replace the audio amplifier..

www.cargeek.ir

www.CarGeek.ir

Inspection Procedure 3: Not sound is heard from one of the speakers. <Vehicles for RUSSIA (vehicles with audio amplifier)>

⚠ CAUTION

Whenever the multivision display is replaced, ensure that the power supply circuit and the earthing circuit are normal. (Check that the voltage is 10 V or more.)

Connector: C-144 <LHD>

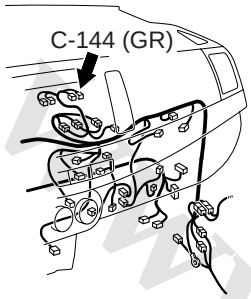

AC701094BJ

Connector: C-144 <RHD>

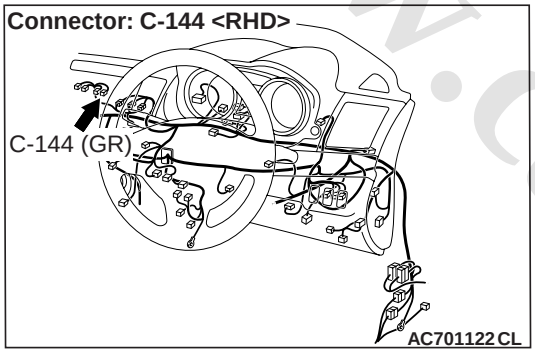

AC701122CL

Connectors: D-26, D-27

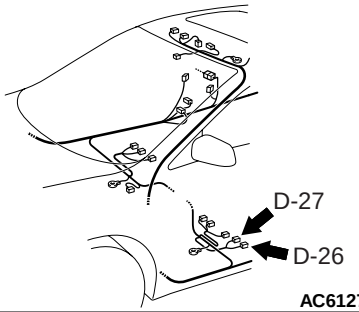

AC612722BI

Connectors: E-02, E-12

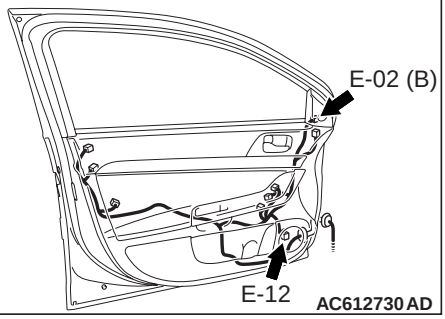

AC612730AD

Connectors: E-04, E-10

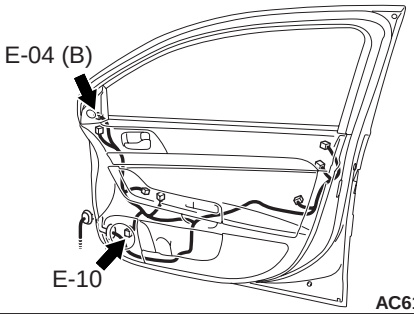

AC612731AD

Connector: E-21

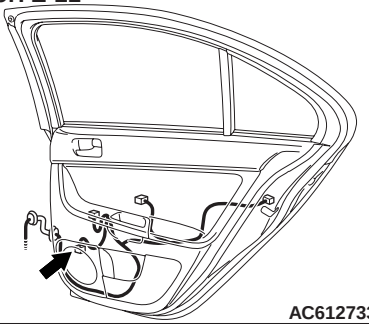

AC612733AB

Connector: E-22

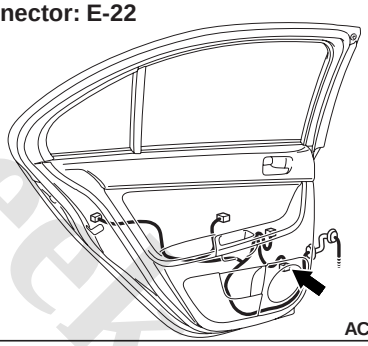

AC612732AB

Connector: F-25 <LANCER SPORTBACK>

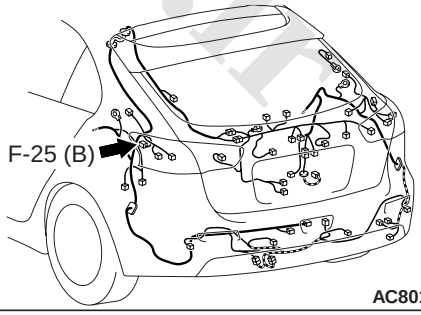

AC801775BJ

www.cargeek.ir

www.CarGeek.ir

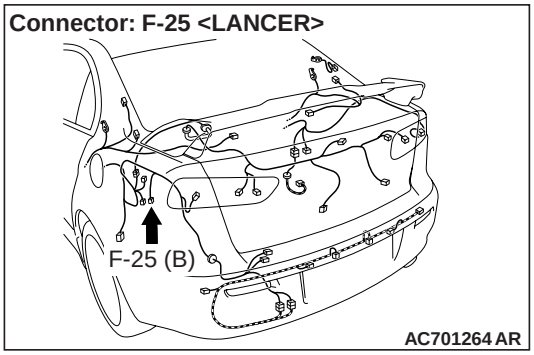

COMMENTS ON TROUBLE SYMPTOM

If the sound is not heard from one of the speakers, the speaker, multivision display, audio amplifier, communication line from the multivision display to the audio amplifier, or communication line from the audio amplifier to the speaker may have a problem. Also, the option coding information may be inconsistent.

PROBABLE CAUSES

- Malfunction of speaker
- Malfunctions of multivision display
- Malfunction of audio amplifier
- Option coding information inconsistency
- Damaged harness wires and connectors

DIAGNOSIS PROCEDURE

STEP 1. ETACS-ECU coding data check

(1) Operate the M.U.T.-III to read the ETACS-ECU option coding information (Refer to GROUP 00 – Coding Table).
(2) Check that the "Number of speaker" is set to "Premium."

Q: Is the check result normal?
YES : Go to Step 2.
NO : Operate the M.U.T.-III to set the option coding "Number of speaker" to "Premium," and check the trouble symptom.

STEP 2. Check the MMCS service mode, CAN communication confirmation and coding data

(1) Display the CAN communication confirmation and coding data for the MMCS service mode. (Refer to)
(2) Check if "PREMIUM" is displayed.

Q: Is the check result normal?
YES : Go to Step 3.
NO : Go to Step 4.

STEP 3. Check the service data log for the MMCS service mode.

Display the service data log for the MMCS service mode and check if the service data log for the SP (speaker) is displayed. (Refer to .)

Q: Is the service data log for the SP (speaker) displayed?
YES : Go to Step 4.
NO : Go to Step 7.

STEP 4. M.U.T.-III CAN bus diagnostics

Use the M.U.T.-III to diagnose the CAN bus lines.

Q: Is the check result normal?
YES : Go to Step 5.
NO : Repair the CAN bus line.

STEP 5. Check whether the diagnosis code is set.

Check if the diagnosis code is set to the CAN box unit.
(1) Erase the diagnosis code.
(2) Turn the ignition switch from "LOCK" (OFF) position to "ON" position.
(3) Check if diagnosis code is set.

Q: Is the diagnosis code set?
YES : Troubleshoot the MMCS (Refer to).
NO : Go to Step 6.

STEP 6. M.U.T.-III other system diagnosis code

Check if the diagnosis code is set to the ETACS-ECU.

Q: Is the diagnosis code set?
YES : Diagnose the ETACS-ECU (Refer to GROUP 54A – ETACS-ECU – Troubleshooting).
NO : Go to Step 7.

STEP 7. Checking with audio speaker check

Perform the audio speaker check, and check which speaker does not output the sound (Refer to).

NOTE: In the following procedure, check the speaker, tweeter or subwoofer that is abnormal.

Q: Is the check result normal?
YES (normal for all) : The trouble can be an intermittent malfunction (Refer to GROUP 00 – How to use Troubleshooting/inspection Service Points – How to Cope with Intermittent Malfunction).
NO (Either a speaker, a tweeter or a subwoofer is abnormal) : Go to Step 8.

www.cargeek.ir

www.CarGeek.ir

STEP 8. Check the following connectors.

Check the following connectors:

- E-12 front door speaker (LH) connector
- E-10 front door speaker (RH) connector
- E-22 rear door speaker (LH) connector
- E-21 rear door speaker (RH) connector
- E-02 tweeter (LH) connector
- E-04 tweeter (RH) connector
- F-25 sub woofer connector

Q: Are all the connectors in good condition?

YES : Go to Step 9.

NO : Repair the defective connector.

STEP 9. Check the speaker, tweeter or subwoofer.

(1) Remove the speaker, tweeter or subwoofer. Refer to .

(2) Check that the speaker or tweeter outputs the noise when the voltage of 5 V is applied to the speaker or tweeter connector terminal. <speaker or tweeter>

(3) Check that the subwoofer outputs the noise when the voltage of 5 V is applied to the subwoofer connector terminal. <subwoofer>

Q: Is the check result normal?

YES : Go to Step 10.

NO : Replace the speaker, tweeter or subwoofer.

STEP 10. Connector check: D-26 <front door speaker or sub woofer>, D-27 <tweeter or rear door speaker> audio amplifier connector

Q: Is the check result normal?

YES : Go to Step 11.

NO : Repair the defective connector.

www.cargeek.ir
www.cargeek.ir

www.CarGeek.ir

STEP 11. Check the wire harness between the speaker or tweeter connector terminal and the audio amplifier connector terminal.

Check the communication lines for open circuit or short circuit.

- <Front door speaker (LH)> Check the wire harness between E-12 front door speaker (LH) connector terminal No.1, 2 and D-26 audio amplifier connector terminal No.28, 38.

NOTE: Prior to the wiring harness inspection, check intermediate connectors C-17 and C-126, and repair if necessary.

- <Front door speaker (RH)> Check the wire harness between E-10 front door speaker (RH) connector terminal No.1, 2 and D-26 audio amplifier connector terminal No.27, 37.

NOTE: Prior to the wiring harness inspection, check intermediate connectors C-17 and C-112, and repair if necessary.

- <Rear door speaker (LH)> Check the wire harness between E-22 rear door speaker (LH) connector terminal No.1, 2 and D-27 audio amplifier connector terminal No.1, 7.

NOTE: Prior to the wiring harness inspection, check intermediate connector D-21, and repair if necessary.

- <Rear door speaker (RH)> Check the wire harness between E-21 rear door speaker (RH) connector terminal No.1, 2 and D-27 audio amplifier connector terminal No.2, 8.

NOTE: Prior to the wiring harness inspection, check intermediate connector D-01, and repair if necessary.

- <Tweeter (LH)> Check the wire harness between E-02 tweeter (LH) connector terminal No.1, 2 and D-27 audio amplifier connector terminal No.14, 6.

NOTE: Prior to the wiring harness inspection, check intermediate connectors C-17 and C-126, and repair if necessary.

- <Tweeter (RH)> Check the wire harness between E-04 tweeter (RH) connector terminal No.1, 2 and D-27 audio amplifier connector terminal No.13, 5.

NOTE: Prior to the wiring harness inspection, check intermediate connectors C-17 and C-112, and repair if necessary.

- <Subwoofer> Check the wire harness between F-25 subwoofer connector terminal No.1, 2, 3, 4 and D-26 audio amplifier connector terminal No.30, 22, 29, 21.

NOTE: Prior to the wiring harness inspection, check intermediate connector D-17, and repair if necessary.

Q: Is the check result normal?
YES <front door speaker> : Go to Step 12.
YES <except front door speaker> : Go to Step 14.
NO (harness wire is abnormal) : Repair the wiring harness.

STEP 12. Connector check: C-144 multivision display connector

Q: Is the check result normal?
YES : Go to Step 13.
NO : Repair the defective connector.

STEP 13. Check the harness wire between C-144 multivision display connector terminal No.3, 7, 12, 15 and D-27 audio amplifier connector No.12, 11, 4, 10.

- Check the communication lines for open circuit or short circuit.

NOTE: Prior to the wiring harness inspection, check intermediate connectors C-139 and C-17, and repair if necessary.

Q: Is the check result normal?
YES : Check the trouble symptom, go to Step 14.
NO : Repair the wiring harness.

STEP 14. Replace the multivision display temporarily, and check the trouble symptom.

Replace the multivision display temporarily, and check that the sound is output from the speaker.

Q: Is the check result normal?
YES : Replace the multivision display.
NO : Replace the audio amplifier..

www.cargeek.ir

www.CarGeek.ir

Inspection Procedure 4: The navigation system can be operated while the vehicle is driven.

⚠ CAUTION

Whenever the multivision display is replaced, ensure that the power supply circuit and the earthing circuit are normal. (Check that the voltage is 10 V or more.)

Multivision Display Communication Circuit

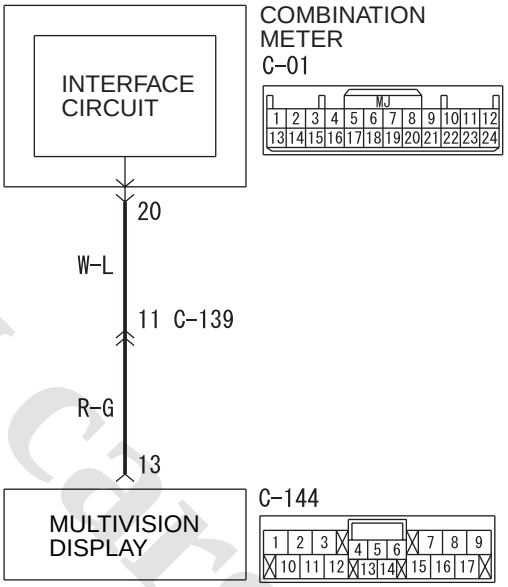

Wire colour code
B : Black LG : Light green G : Green L : Blue W : White Y : Yellow SB : Sky blue
BR : Brown O : Orange GR : Grey R : Red P : Pink V : Violet PU : Purple SI : Silver

WBH54E019A

Connector: C-01 <LHD>

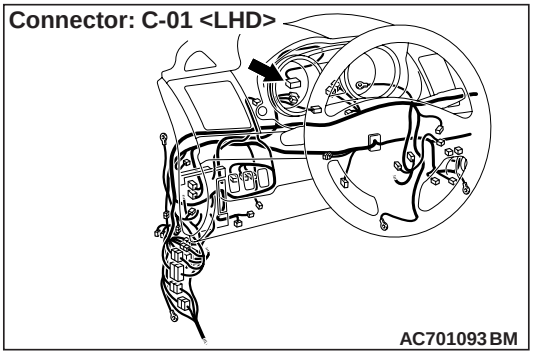

AC701093BM

Connector: C-144 <LHD>

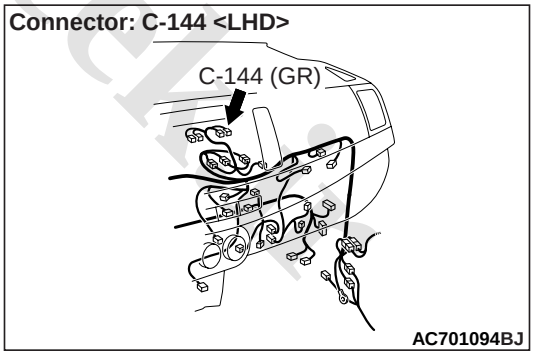

AC701094BJ

Connectors: C-01, C-144 <RHD>

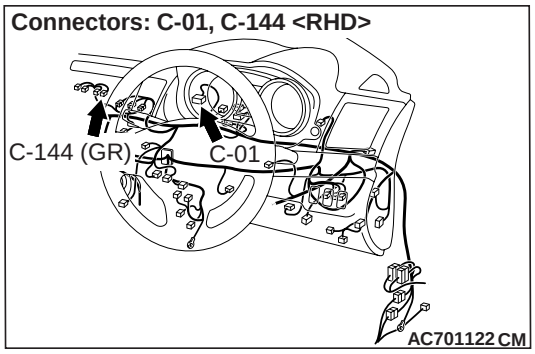

AC701122CM

COMMENTS ON TROUBLE SYMPTOM

There is a failure in the wiring harness between the combination meter and the multivision display, the respective connector(s), the combination meter or the multivision display.

PROBABLE CAUSES

- Malfunctions of combination meter
- Malfunctions of multivision display
- Damaged harness wires and connectors

www.cargeek.ir

www.CarGeek.ir

DIAGNOSIS PROCEDURE

STEP 1. Perform "Vehicle Signal Check" in the MMCS service mode.

Perform "Vehicle Signal Check" in the MMCS service mode to check whether vehicle speed signal is normal (Refer to).

Q: Is the vehicle speed signal transmitted normally?
YES : Replace the multivision display.
NO : Go to Step 2.

STEP 2. Check the speedometer.

Check whether the speedometer works normally.

Q: Does the speedometer work normally?
YES : Go to Step 3.
NO : Diagnose the combination meter (Refer to Combination meter – Troubleshooting).

STEP 3. Connector check: C-01 combination meter connector, C-144 multivision display connector

Q: Is the check result normal?
YES : Go to Step 4.
NO : Repair the defective connector.

STEP 4. Check the wire harness between C-01 combination meter connector terminal No.20 and C-144 multivision display connector terminal No.13.

- Check the communication line for open circuit or short circuit.

NOTE: Prior to the wiring harness inspection, check intermediate connector C-139, and repair if necessary.

Q: Is the check result normal?
YES : Go to Step 5.
NO : Repair the wiring harness.

STEP 5. Substitute a known good multivision display, and check the trouble symptom.

Check that no menus are active during driving.

Q: Is the check result normal?
YES : Replace the multivision display.
NO : Replace the combination meter.

www.cargeek.ir

www.CarGeek.ir

Inspection Procedure 5: The screen is not normal in the navigation mode. (The own vehicle mark is dislocated.) <Except vehicles for RUSSIA>

⚠ CAUTION

Before replacing the multivision display, ensure that the power supply circuit, the earth circuit, and the communication circuit are normal. (Check that the voltage is 10 V or more.)

Multivision Display Communication Circuit

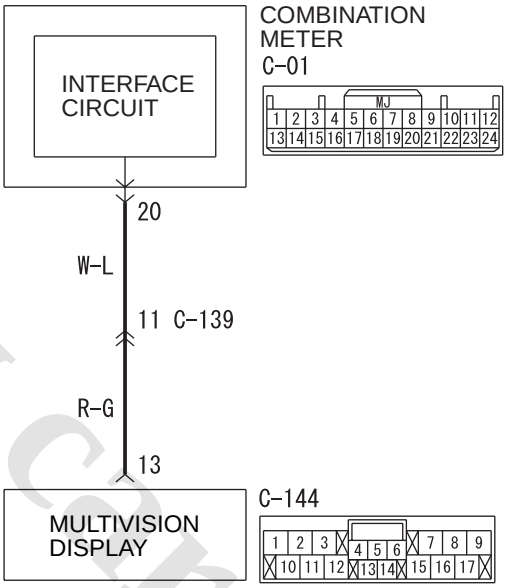

Wire colour code
B : Black LG : Light green G : Green L : Blue W : White Y : Yellow SB : Sky blue
BR : Brown O : Orange GR : Grey R : Red P : Pink V : Violet PU : Purple SI : Silver

WBH54E019A

Connector: C-01 <LHD>

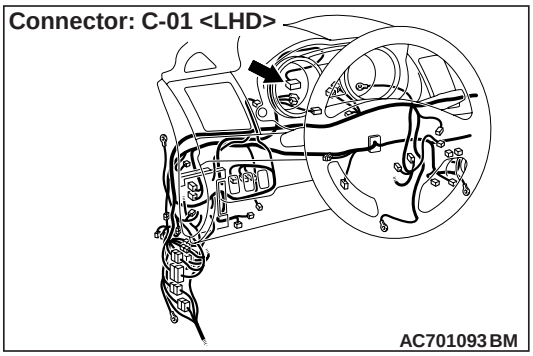

AC701093BM

Connector: C-144 <LHD>

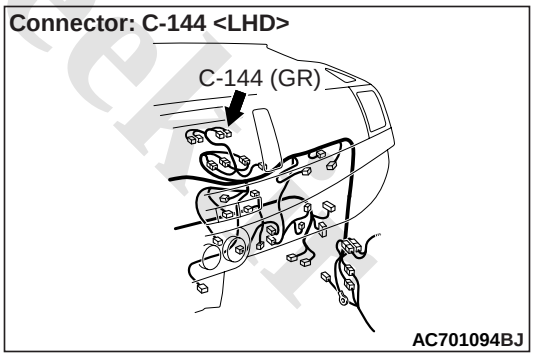

AC701094BJ

Connectors: C-01, C-144 <RHD>

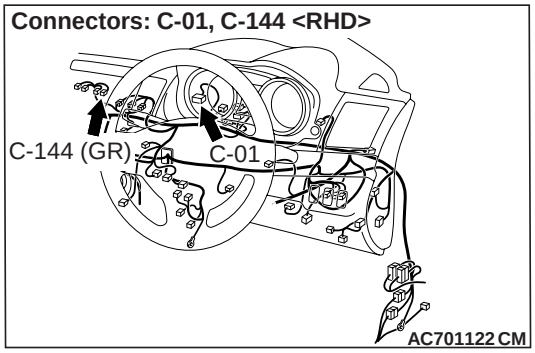

AC701122CM

COMMENTS ON TROUBLE SYMPTOM

There is a failure in the wiring harness between the combination meter and the multivision display, the GPS antenna, the respective connector(s), the combination meter or the multivision display.

NOTE: If the vehicle speed signal has a problem, the speedometer of combination meter will be affected. Confirm if the speedometer of combination meter works normally at the abnormal state to customers.

PROBABLE CAUSES

- Malfunctions of GPS antenna

www.cargeek.ir

www.CarGeek.ir

- Malfunctions of combination meter
- Malfunctions of multivision display
- Damaged harness wires and connectors

DIAGNOSIS PROCEDURE

STEP 1. Confirmation in MMCS service mode
Check the items below in the MMCS service mode (Refer to).

- Perform "Network/Connect Line Check" in the MMCS service mode to check that the communication and wire connection with the GPS are in good condition.
- Perform "Vehicle Signal Check", and then check the status of the vehicle speed signal.
- Perform "Sensor Check", and then check the status of the vehicle speed sensor and the gyro sensor.

Q: Is the check result normal?
YES (OK for all) : Go to Step 6.
NO <GPS is not OK> : Go to Step 2.
NO <The vehicle speed sensor is not OK, or vehicle speed pulse does not increase after starting from a standstill> : Go to Step 3.
NO <Gyro sensor is not OK> : Go to Step 6.

STEP 2. GPS reception check
(1) Start the multivision display.
(2) Press the [INFO] button.
(3) Select [Vehicle Position].
(4) Check if the GPS signals are received.

Q: Is the check result normal?
YES : Go to Step 6.
NO : Perform Inspection Procedure 7 "GPS signal cannot be received" (Refer to .), and then go to Step 6.

STEP 3. Check the speed meter.
Check whether the speed meter works normally. (Refer to .)

Q: Does the speedometer work normally?
YES : Go to Step 4.
NO : Diagnose the combination meter (Refer to Combination meter – Troubleshooting).

STEP 4. Connector check: C-01 combination meter connector, C-144 multivision display connector

Q: Is the check result normal?
YES : Go to Step 5.
NO : Repair the defective connector.

STEP 5. Check the harness wire between C-01 combination meter connector terminal No.20 and C-144 multivision display connector terminal No.13.

- Check the signal line for open circuit or short circuit.

NOTE: Prior to the wiring harness inspection, check intermediate connector C-139, and repair if necessary.

Q: Is the check result normal?
YES : Go to Step 6.
NO : Repair the wiring harness.

STEP 6. Check of the troubles
Drive the vehicle for some time with the GPS signals being received, and check if the own vehicle mark is dislocated.

Q: Is the check result normal?
YES : The trouble can be an intermittent malfunction (Refer to GROUP 00 – How to use Troubleshooting/inspection Service Points – How to Cope with Intermittent Malfunction).
NO : Replace the multivision display.

www.cargeek.ir

www.CarGeek.ir

Inspection Procedure 5: The screen is not normal in the navigation mode. (The own vehicle mark is dislocated.) <Vehicles for RUSSIA>

⚠ CAUTION

Before replacing the multivision display, ensure that the power supply circuit, the earth circuit, and the communication circuit are normal. (Check that the voltage is 10 V or more.)

Multivision Display Communication Circuit

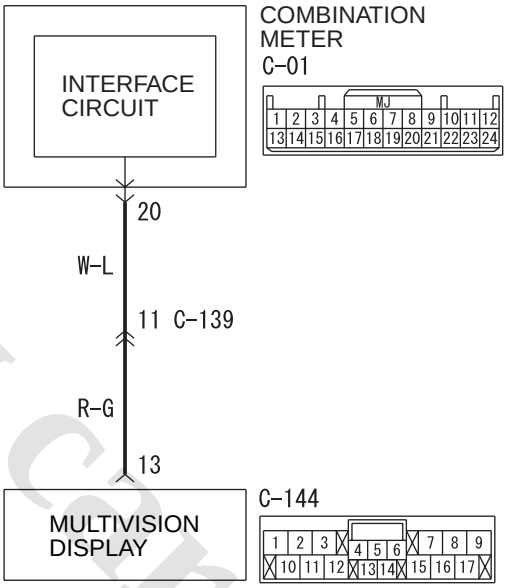

Wire colour code
B : Black LG : Light green G : Green L : Blue W : White Y : Yellow SB : Sky blue
BR : Brown O : Orange GR : Grey R : Red P : Pink V : Violet PU : Purple SI : Silver

WBH54E019A

Connector: C-01 <LHD>

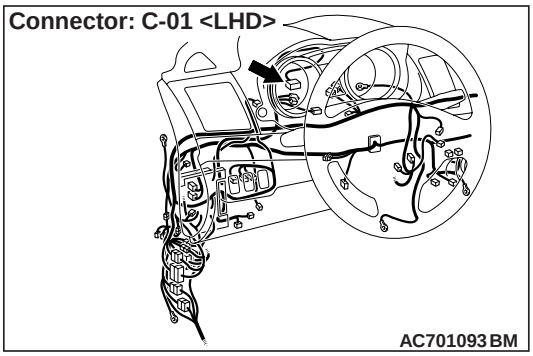

AC701093BM

Connector: C-144 <LHD>

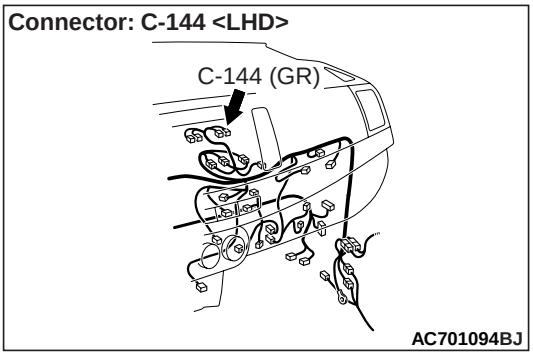

AC701094BJ

COMMENTS ON TROUBLE SYMPTOM

There is a failure in the wiring harness between the combination meter and the multivision display, the GPS antenna, the respective connector(s), the combination meter or the multivision display.

NOTE: If the vehicle speed signal has a problem, the speedometer of combination meter will be affected. Confirm if the speedometer of combination meter works normally at the abnormal state to customers.

PROBABLE CAUSES

- Malfunctions of GPS antenna
- Malfunctions of combination meter
- Malfunctions of multivision display
- Damaged harness wires and connectors

www.cargeek.ir

www.CarGeek.ir

DIAGNOSIS PROCEDURE

STEP 1. Confirmation in MMCS service mode

Check the items below in the MMCS service mode (Refer to).

- Perform "Network/Connect Line Check" in the MMCS service mode to check that the communication and wire connection with the GPS are in good condition.
- Perform "Vehicle Signal Check", and then check the status of the vehicle speed signal.
- Perform "Sensor Check", and then check the status of the vehicle speed sensor and the gyro sensor.

Q: Is the check result normal?

YES (OK for all) : Go to Step 6.
NO <GPS is not OK> : Go to Step 2.
NO <The vehicle speed sensor is not OK, or vehicle speed pulse does not increase after starting from a standstill> : Go to Step 3.
NO <Gyro sensor is not OK> : Go to Step 6.

STEP 2. GPS reception check

(1) Start the multivision display.

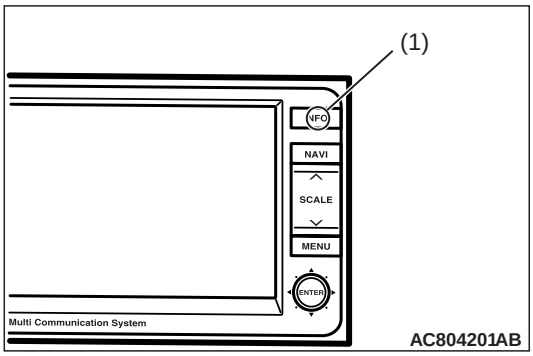

(2) Press the (1).

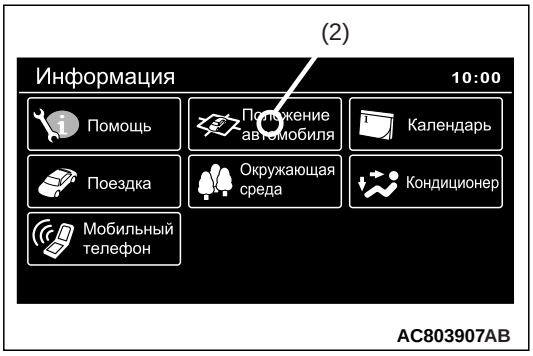

(3) Select (2).

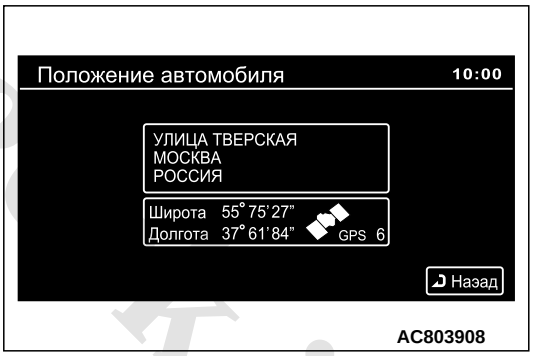

(4) Wait for 5 minutes, and then check whether GPS signal can be received.

Q: Is the check result normal?

YES : Go to Step 6.
NO : Perform Inspection Procedure 7 "GPS signal cannot be received" (Refer to .), and then go to Step 6.

STEP 3. Check the speedometer.

Check whether the speedometer works normally. (Refer to .)

Q: Does the speedometer work normally?

YES : Go to Step 4.
NO : Diagnose the combination meter (Refer to Combination meter – Troubleshooting).

www.cargeek.ir

www.CarGeek.ir

STEP 4. Connector check: C-01 combination meter connector, C-144 multivision display connector

Q: Is the check result normal?
YES : Go to Step 5.
NO : Repair the defective connector.

STEP 5. Check the harness wire between C-01 combination meter connector terminal No.20 and C-144 multivision display connector terminal No.13.

- Check the signal line for open and short circuit.

NOTE: Prior to the wiring harness inspection, check intermediate connector C-139, and repair if necessary.

Q: Is the check result normal?
YES : Go to Step 6.
NO : Repair the wiring harness.

STEP 6. Check of the troubles

Drive the vehicle for some time with the GPS signals being received, and check if the own vehicle mark is dislocated.

Q: Is the check result normal?
YES : The trouble can be an intermittent malfunction (Refer to GROUP 00 – How to use Troubleshooting/inspection Service Points – How to Cope with Intermittent Malfunction).
NO : Replace the multivision display.

www.cargeek.ir
www.cargeek.ir

www.CarGeek.ir

Inspection Procedure 6: The FM/MW/LM radio broadcasting can not be received.

⚠ CAUTION

Whenever the multivision display is replaced, ensure that the power supply circuit and the earthing circuit are normal. (Check that the voltage is 10 V or more.)

Antenna Circuit

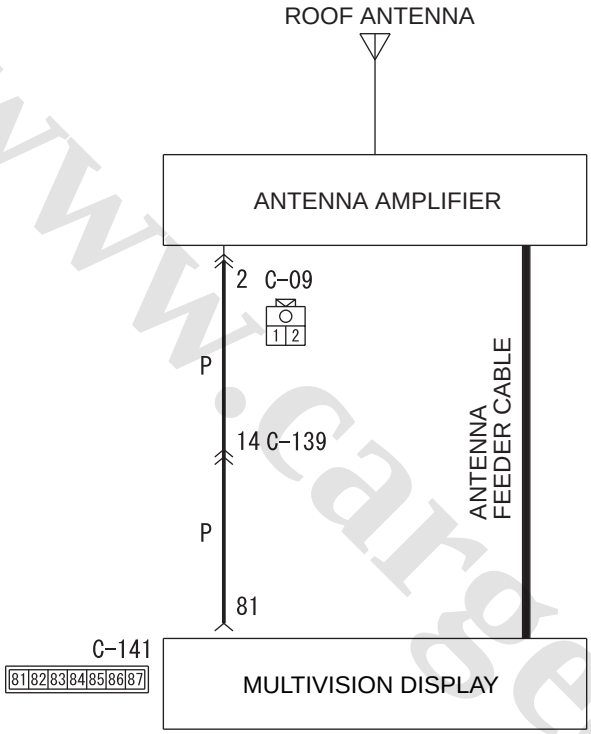

Wire colour code
B : Black LG : Light green G : Green L : Blue W : White Y : Yellow SB : Sky blue
BR : Brown O : Orange GR : Grey R : Red P : Pink V : Violet PU : Purple SI : Silver

WBH54E051A

Connectors: C-09, C-141 <LHD>

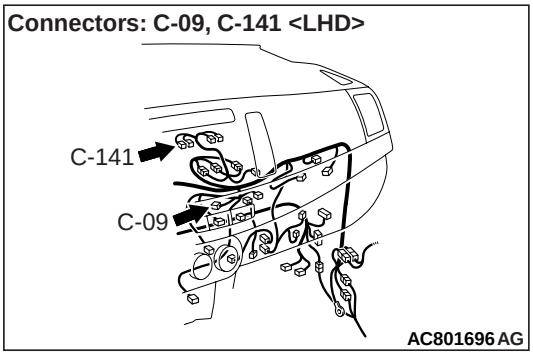

Connectors: C-09, C-141 <RHD>

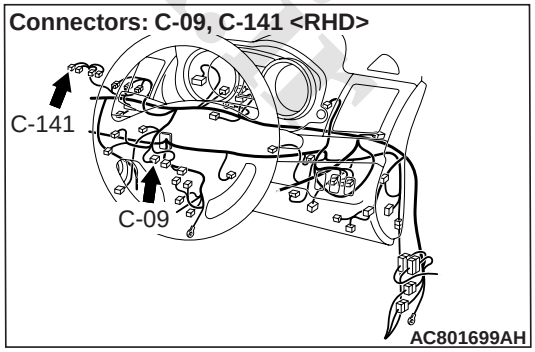

COMMENTS ON TROUBLE SYMPTOM

In case of FM/MW/LW radio broadcasting can not be received., the roof antenna (antenna rod, antenna base), antenna fender or multivision display may have a problem.

www.cargeek.ir

www.CarGeek.ir

NOTE: The radio wave may not be received if the vehicle is placed in the area which is exposed to a special electric field. Thus, check that the radio broadcasting can be received using the radio of another vehicle before carrying out diagnosis.

PROBABLE CAUSES

- Malfunction of roof antenna (antenna rod, antenna base)
- Antenna feeder malfunction
- Malfunctions of multivision display

DIAGNOSIS PROCEDURE

STEP 1. Check the state of the roof antenna.

Q: Is the roof antenna assembled?
YES : Go to Step 2.
NO : Assemble the antenna.

STEP 2. Check to see if inspections are taking place is an area exposed to special electric fields.

Q: Is the reception area exposed to special electric fields?
YES : Go to Step 3.
NO : Go to Step 4.

STEP 3. Move the vehicle and check the radio.
Move the vehicle to a good reception area that is not exposed to special electric fields.

Q: Is the check result normal?
YES : Diagnosis complete.
NO : Go to Step 4.

STEP 4. Check damage in the roof antenna (the antenna rod, the antenna base).

Q: Is the check result normal?
YES : Go to Step 5.
NO : Replace antenna rod or antenna base.

STEP 5. Check the connection of the antenna plug and multivision display.

Q: Is the check result normal?
YES : Go to Step 6.
NO : Thoroughly connect the antenna plug and the multivision display.

STEP 6. Connector check: C-141 multivision display connector, C-09 antenna amplifier (antenna base) connector

Q: Is the check result normal?
YES : Go to Step 7.
NO : Repair or replace the damaged connector.

STEP 7. Check the antenna feeder between C-141 multivision display connector terminal No.81 and C-09 antenna amplifier (antenna base) connector terminal No.2.

- Check the signal line for open circuit and short circuit.

NOTE: Prior to the wiring harness inspection, intermediate connector C-139, and repair if necessary.

Q: Is the check result normal?
YES : Go to Step 8.
NO : Repair the antenna feeder.

STEP 8. Substitute a known good multivision display, and check the trouble symptom.

Q: Is the check result normal?
YES : Replace the multivision display.
NO : Either repair or replace the roof antenna assembly.

Inspection Procedure 7: GPS signal can not be received. <Except vehicles for RUSSIA>

⚠ CAUTION
Whenever the multivision display is replaced, ensure that the power supply circuit and the earthing circuit are normal. (Check that the voltage is 10 V or more.)

COMMENTS ON TROUBLE SYMPTOM
The GPS antenna or the multivision display may be defective.

PROBABLE CAUSES

- Malfunctions of GPS antenna
- Malfunctions of multivision display

www.cargeek.ir

www.CarGeek.ir

DIAGNOSIS PROCEDURE

STEP 1. Confirmation in MMCS service mode
Perform "Network/Connect Line Check" in the MMCS service mode to check that the communication and wire connection with the GPS Receiver are OK. (Refer to .)

Q: Is the check result normal?
YES : Go to Step 3.
NO : Go to Step 2.

STEP 2. Check for the vehicle's current position.
Check that the vehicle is parked at the place without the shield.

Q: Is the vehicle parked on a well-ventilated place?
YES : Go to Step 3.
NO : Move the vehicle to the place without the shield.

STEP 3. Confirming GPS signal reception
(1) Start the multivision display.
(2) Press the [INFO] button.
(3) Select [Vehicle Position].
(4) Wait for 5 minutes, and then check whether GPS signal can be received.

Q: Can GPS signal be received?
YES : The diagnosis is complete. (There is no failure)
NO : Go to Step 4.

STEP 4. Substitute a known good multivision display, and check the trouble symptom.
(1) Temporarily replace the multivision display.
(2) Start the multivision display.
(3) Press the [INFO] button.
(4) Select [Vehicle Position].
(5) Check if the GPS signals are being received after 5 minutes have elapsed.

Q: Is the check result normal?
YES : Replace the multivision display.
NO : Replace the GPS antenna.

Inspection Procedure 7: GPS signal can not be received. <Vehicles for RUSSIA>

⚠ CAUTION
Whenever the multivision display is replaced, ensure that the power supply circuit and the earthing circuit are normal. (Check that the voltage is 10 V or more.)

COMMENTS ON TROUBLE SYMPTOM
The GPS antenna or the multivision display may be defective.

PROBABLE CAUSES
- Malfunctions of GPS antenna
- Malfunctions of multivision display

DIAGNOSIS PROCEDURE

STEP 1. Confirmation in MMCS service mode
Perform "Network/Connect Line Check" in the MMCS service mode to check that the communication and wire connection with the GPS antenna are OK. (Refer to .)

Q: Is the check result normal?
YES : Go to Step 2.
NO : Go to Step 4.

STEP 2. Check for the vehicle's current position.
Check that the vehicle is parked on a well-ventilated place.

Q: Is the vehicle parked on a well-ventilated place?
YES : Go to Step 3.
NO : Move the vehicle to a well-ventilated area.

www.cargeek.ir

www.CarGeek.ir

STEP 3. Confirming GPS signal reception

(1) Start the multivision display.

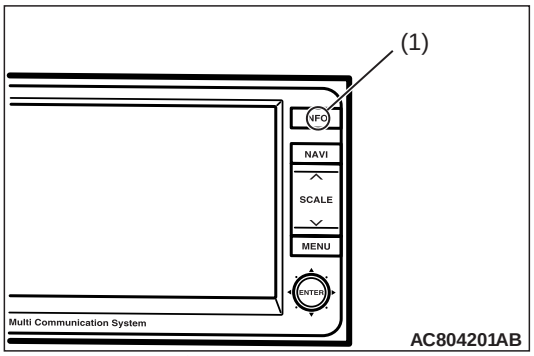

(2) Press the (1).

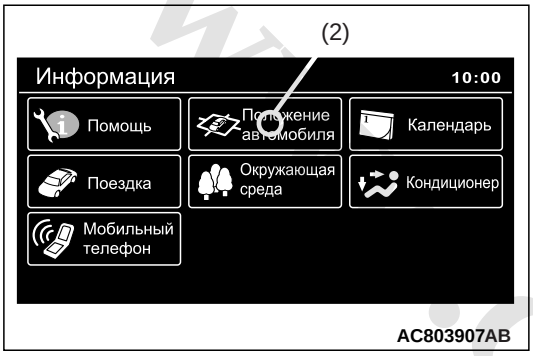

(3) Select (2).

(4) Wait for 5 minutes, and then check whether GPS signal can be received.

Q: Can GPS signal be received?

YES : The diagnosis is complete. (There is no failure)

NO : Go to Step 4.

STEP 4. Substitute a known good multivision display, and check the trouble symptom.

(1) Temporarily replace the multivision display.

(2) Start the multivision display.

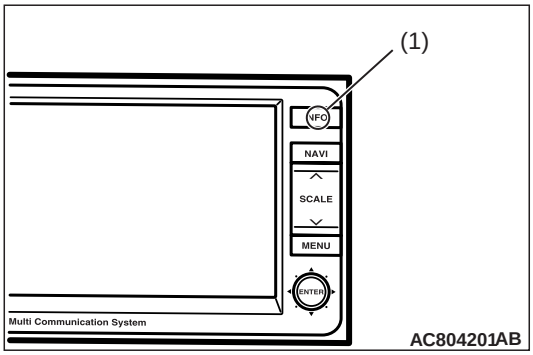

(3) Press the (1).

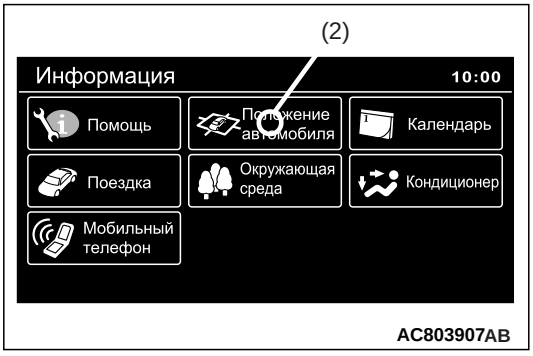

(4) Select (2).

(5) Wait for 5 minutes, and then check whether GPS signal can be received.

Q: Is the check result normal?

YES : Replace the multivision display.

NO : Replace the GPS antenna.

Inspection Procedure 8: CD/DVD cannot be played.

⚠ CAUTION

Whenever the multivision display is replaced, ensure that the power supply circuit and the earthing circuit are normal. (Check that the voltage is 10 V or more.)

COMMENTS ON TROUBLE SYMPTOM

The CD/DVD or the multivision display may be defective.

PROBABLE CAUSES

- Defective CD/DVD

www.cargeek.ir

www.CarGeek.ir

- Malfunctions of multivision display

DIAGNOSIS PROCEDURE

STEP 1. Check if the error message is displayed on the monitor.
(Refer to .)

Q: Is the error message displayed on the monitor?
YES : Refer to error massage (refer to), take necessary steps. If the CD or DVD is still not be played, go to Step 2.
NO : Go to Step 2.

STEP 2. Check the CD/DVD insertion surface.
Check that the CD/DVD is inserted with the correct surface facing up.

Q: Is the check result normal?
YES : Go to Step 3.
NO : Check the disc insertion surface, and reinsert the disc. (In case of a single-sided disc, insert it with its label facing upward.)

STEP 3. Check the CD/DVD.
- Check that the DVD has the correct region code.
- Check that the CD conforms to multivision display standards .

Q: Is the check result normal?
YES : Go to Step 4.
NO : Use a DVD with a correct region code. Or, use a CD conforming to multivision display standards.

STEP 4. Check the CD/DVD.
Check that the CD /DVD is free of dirt or scratch.

Q: Is the check result normal?
YES : Go to Step 5.
NO : Clean the disc, use a disc without scratches and burrs, or remove the burrs from the disc, and then reinsert the disc.

STEP 5. Temporarily replace the CD/DVD with another CD or DVD, and check the trouble symptom.
Check that the new CD/DVD is played normally when it is inserted.

Q: Is the check result normal?
YES : Replace the used CD/DVD.
NO : Go to Step 6.

STEP 6. Check the service data log for the MMCS service mode.
(1) Display the service data log for the MMCS service mode. (Refer to .)
(2) Check if the service data log for drive and HDD is displayed.

Q: Is the service data log displayed?
YES (The service data log for drive is displayed.) : Check for foreign materials or condensation. Repair if there is an abnormality, and then go to Step 7.
YES (The service data log for HDD is displayed.) : Abnormalities relating to high or low temperature may be present. Check that the multivision display can play the disc at the operable temperature. If it cannot be played normally, go to Step 7.
NO : Go to Step 7.

STEP 7. Perform "Network/Connect Line Check" in the MMCS service mode.
(1) Display "Network/Connect Line Check" in the MMCS service mode. (Refer to .)
(2) Check if "DVD Drive OK" is displayed.
(3) Check if "HDD Drive OK" is displayed.

Q: Is the check result normal?
YES : Go to Step 8.
NO : Replace the multivision display.

STEP 8. Check of the troubles
Check that the new CD/DVD is played normally when it is inserted.

Q: Is the check result normal?
YES : The diagnosis is complete.
NO : Go to Step 9.

STEP 9. Temporarily replace the multivision display, and check the trouble symptom.
After temporary replacement of the multivision display, check that the new CD/DVD is played normally when it is inserted.

Q: Is the check result normal?
YES : Replace the multivision display.
NO : Replace the CD/DVD.

www.cargeek.ir

www.CarGeek.ir

Inspection Procedure 9: Image of a DVD is played, but no sound is played.

⚠ CAUTION
Whenever the multivision display is replaced, ensure that the power supply circuit and the earthing circuit are normal. (Check that the voltage is 10 V or more.)

COMMENTS ON TROUBLE SYMPTOM
The DVD or the multivision display may be defective.

PROBABLE CAUSES
- Defective DVD
- Malfunctions of multivision display

DIAGNOSIS PROCEDURE

STEP 1. Check if the error message is displayed on the monitor.
(Refer to .)

Q: Is the error message displayed on the monitor?
YES : Refer to error massage (refer to), take necessary steps. If the CD or DVD is still not be played, go to Step 2.
NO : Go to Step 2.

STEP 2. Check whether other sounds are emitted.
Check whether sound other than DVD is emitted.
(1) Check if the sound is output when the music server is used.
(2) Check if the sound is output when the radio is used.
(3) Check if the sound is output when the CD is used.

Q: Is sound other than DVD emitted?
YES : Go to Step 3.
NO : Troubleshoot the MMCS. (Refer to .)

STEP 3. Check a DVD to be inserted.
Check if the sound is recorded in the DVD, using other DVD players.

Q: Is sound data recorded in the DVD?
YES : Go to Step 4.
NO : Use a DVD containing sound data.

STEP 4. Check the DVD.
Check that the DVD is free of dirt or scratch.

Q: Is the check result normal?
YES : Go to Step 5.
NO : Clean the disc, use a disc without scratches and burrs, or remove the burrs from the disc, and then reinsert the disc.

STEP 5. Temporarily replace the DVD with another DVD, and check the trouble symptom.
Check if the DVD is played normally when it is inserted.

Q: Is the check result normal?
YES : Replace the used DVD.
NO : Go to Step 6.

STEP 6. Check the service data log for the MMCS service mode.
(1) Display the service data log for the MMCS service mode. (Refer to .)
(2) Check if the service data log for drive and HDD is displayed.

Q: Is the service data log displayed?
YES (The service data log for drive is displayed.) : Check for foreign materials or condensation. Repair if there is an abnormality, and then go to Step 7.
YES (The service data log for HDD is displayed.) : Abnormalities relating to high or low temperature may be present. Check that the multivision display can play the disc at the operable temperature. If it cannot be played normally, go to Step 7.
NO : Go to Step 7.

STEP 7. Perform "Network/Connect Line Check" in the MMCS service mode.
(1) Display "Network/Connect Line Check" in the MMCS service mode. (Refer to .)
(2) Check if "DVD Drive OK" is displayed.
(3) Check if "HDD Drive OK" is displayed.

Q: Is the check result normal?
YES : Go to Step 8.
NO : Replace the multivision display.

STEP 8. Check of playing method
Check whether the disc was played normally and not with special playback (fast rewind, fast forward, slow, pause). Also, check whether the mute mode was selected. After that, check if the DVD is played normally when it is inserted.

Q: Is the check result normal?

www.cargeek.ir

www.CarGeek.ir

YES : This diagnosis is complete.
NO : Go to Step 9.

STEP 9. Temporarily replace the multivision display, and check the trouble symptom.
After temporary replacement of the multivision display, check that the new DVD is played normally when it is inserted.

Q: Is the check result normal?
YES : Replace the multivision display.
NO : Replace the DVD.

Inspection Procedure 10: Sound of a DVD can be played, but no image is played.

⚠ CAUTION
Whenever the multivision display is replaced, ensure that the power supply circuit and the earthing circuit are normal. (Check that the voltage is 10 V or more.)

COMMENTS ON TROUBLE SYMPTOM
The DVD or the multivision display may be defective.

PROBABLE CAUSES
- Defective DVD
- Malfunctions of multivision display

DIAGNOSIS PROCEDURE

STEP 1. Check if the error message is displayed on the monitor.
(Refer to .)

Q: Is the error message displayed on the monitor?
YES : Refer to error massage (refer to), take necessary steps. If the DVD is still not be played, go to Step 2.
NO : Go to Step 2.

STEP 2. Check the DVD.
Check that the DVD is free of dirt or scratch.

Q: Is the check result normal?
YES : Go to Step 3.
NO : Clean the disc, use a disc without scratches and burrs, or remove the burrs from the disc, and then reinsert the disc.

STEP 3. Temporarily replace the DVD with another DVD, and check the trouble symptom.
Check if another DVD is played normally when it is inserted.

Q: Is the check result normal?
YES : Replace the used DVD.
NO : Go to Step 4.

STEP 4. Check the service data log for the MMCS service mode.
(1) Display the service data log for the MMCS service mode. (Refer to .)
(2) Check that the service data log for drive is displayed.
(3) Check that the service data log for monitor is displayed.
(4) Check that the service data log for HDD is displayed.

Q: Is the error log displayed?
YES (The service data log for drive is displayed.) : Check for foreign materials or condensation. Repair if there is an abnormality, and then go to Step 5.
YES (The service data log for monitor or HDD is displayed.) : Abnormalities relating to high or low temperature may be present. Check if the DVD image is displayed on the monitor within the temperature range where the navigation and menu screens can be displayed. If the image is not displayed, go to Step 5.
NO : Go to Step 5.

STEP 5. Perform "Network/Connect Line Check" in the MMCS service mode.
(1) Display "Network/Connect Line Check" in the MMCS service mode. (Refer to .)
(2) Check if "DVD Drive OK" is displayed.
(3) Check if "HDD Drive OK" is displayed.

Q: Is the check result normal?
YES : Go to Step 6.
NO : Replace the multivision display.

www.cargeek.ir

www.CarGeek.ir

STEP 6. Temporarily replace the multivision display, and check the trouble symptom.
After temporary replacement of the multivision display, check if the DVD image is displayed.

Q: Is the check result normal?

YES : Replace the multivision display.
NO : Replace the DVD.

Inspection Procedure 11: The picture and sound of audio and video adapter's input are not played.

⚠ CAUTION
Whenever the multivision display is replaced, ensure that the power supply circuit and the earthing circuit are normal. (Check that the voltage is 10 V or more.)

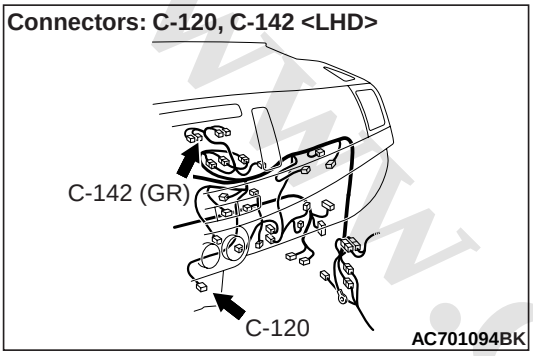

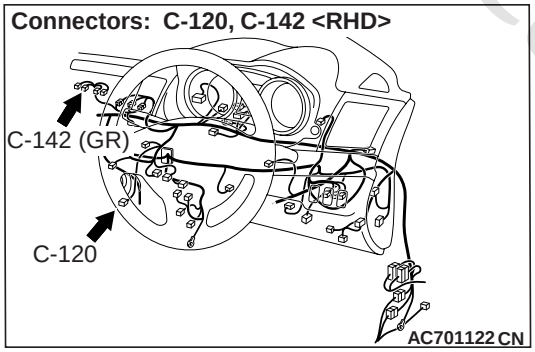

COMMENTS ON TROUBLE SYMPTOM
The wiring harness between the audio and video adapter and the multivision display, the audio and video adapter or the multivision display may have a problem.

NOTE: The connected equipment side or the connection from the audio and video adapter to the equipment may have a problem. Therefore, check that the operation status and the connecting method of the equipment connected to the multivision display and audio and video adapter before performing the diagnosis.

PROBABLE CAUSES
- The multivision display may be defective
- The audio and video adaptor may be defective
- Damaged harness wires and connectors

DIAGNOSIS PROCEDURE

STEP 1. Check of DVD picture
Check that the DVD picture is displayed normally.

Q: Is the check result normal?
YES : Go to Step 2.
NO : Perform the troubleshooting related to the MMCS (Refer to).

STEP 2. Check the audio and video adapter.
Check the audio and video adapter.(Refer to)

Q: Is the check result normal?
YES : Go to Step 3.
NO : Replace the audio and video adapter.

STEP 3. Connector check: C-142 multivision display connector, C-120 audio and video adaptor connector

Q: Is the check result normal?
YES : Go to Step 4.
NO : Repair the connector concerned.

STEP 4. Check the wiring harness between C-142 multivision display connector terminal No. 47, 63, 48, 64, 49 and C-120 audio and video adaptor connector terminal No. 1, 2, 6, 4, 5.
- Check the communication lines for open circuit or short circuit.

NOTE: Prior to the wiring harness inspection, check intermediate connector C-133, C-140, and repair if necessary.

Q: Is the check result normal?
YES : Go to Step 5.
NO : Repair the wiring harness.

www.cargeek.ir

www.CarGeek.ir

STEP 5. Temporarily replace the multivision display, and check the trouble symptom.
Check that the external input is normal.

Q: Is the check result normal?

YES : Replace the multivision display.
NO : Replace the audio and video adapter.

Inspection Procedure 12: Check the CAN box unit power supply circuit. <Vehicles for RUSSIA>

⚠ CAUTION
Before replacing the CAN box unit, ensure that the power supply circuit, the earth circuit, and the communication circuit are normal. (Check that the voltage is 10 V or more.)

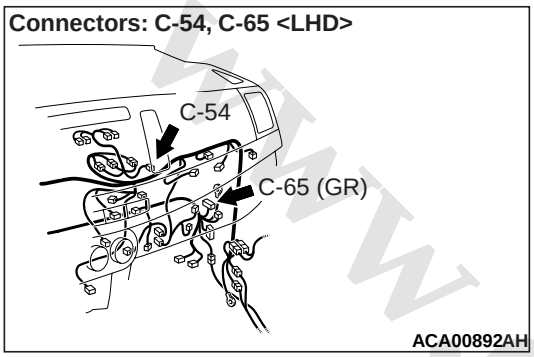

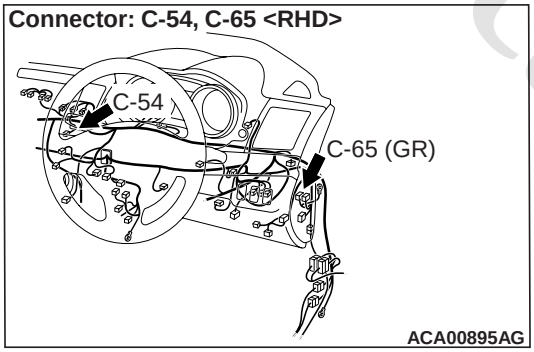

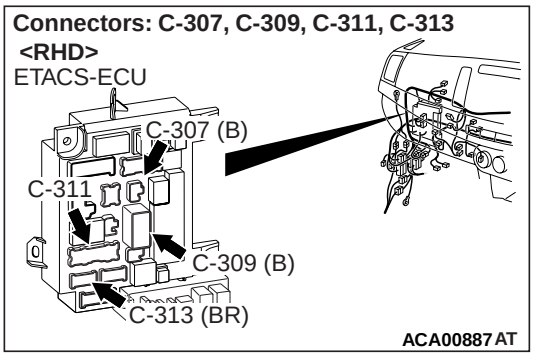

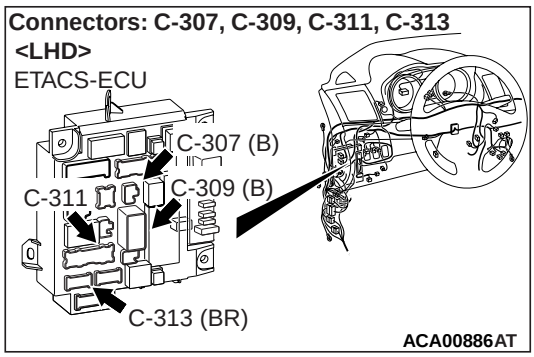

COMMENTS ON TROUBLE SYMPTOM

If the CAN box unit functions do not work at all, the CAN box unit power supply system, body earth system, or CAN box unit may have a problem.

NOTE: From the fusible link to C-139 intermediate connector, the CAN box unit uses the same power supply circuit as that of multivision display. Therefore, check first if the multivision display operates normally. If the multivision display does not operate normally, carry out in advance the troubleshooting of "No navigation screen is displayed". (Refer to <Vehicles without Auto Stop & Go (AS&G) System).

PROBABLE CAUSES

- Damaged harness wires and connectors
- Malfunction of CAN box unit
- Malfunction of DC/DC converter

DIAGNOSIS PROCEDURE

STEP 1. Check the multivision display
Check if the multivision display power is turned ON.

Q: Is the check result normal?
YES : Go to Step 2
NO : Perform Inspection Procedure 1 "No navigation screen is displayed."(Refer to <Vehicles without Auto Stop & Go (AS&G) System>.)

www.cargeek.ir

www.CarGeek.ir

STEP 2. Connector check: C-54 CAN box unit connector and C-139 intermediate connector

Q: Is the check result normal?
YES : Go to Step 3
NO : Repair or replace the damaged component(s).

STEP 3. Resistance measurement at C-54 CAN box unit connector.
(1) Disconnect C-54 CAN box unit connector and measure the resistance available at the wiring harness side of the connector.
(2) Check the continuity between C-54 CAN box unit connector terminal No.1 and body earth.

OK: Continuity exists (2 Ω or less)

Q: Is the check result normal?
YES : Go to Step 5
NO : Go to Step 4

STEP 4. Check the wiring harness between C-54 CAN box unit connector terminal No.1 and body earth.
- Check the earth wires for open circuit.

Q: Is the check result normal?
YES : No action is necessary and testing is complete.
NO : Repair the wiring harness.

STEP 5. Voltage measurement at C-54 CAN box unit connector
(1) Disconnect C-54 CAN box unit connector and measure the voltage available at the wiring harness side of the connector.
(2) Measure the voltage between C-54 CAN box unit connector terminal No.2 and body earth.

OK: System voltage

Q: Is the check result normal?
YES : Go to Step 7
NO : Go to Step 6

STEP 6. Check the wiring harness between C-54 CAN box unit connector terminal No.2 and C-139 intermediate connector terminal No.10.
- Check the power supply lines (battery power supply) for open circuit and short circuit.

Q: Is the check result normal?
YES : The trouble can be an intermittent malfunction (Refer to GROUP 00 – How to use Troubleshooting/inspection Service Points – How to Cope with Intermittent Malfunction).
NO : Repair the wiring harness.

STEP 7. Voltage measurement at C-54 CAN box unit connector
(1) Disconnect C-54 CAN box unit connector and measure the voltage available at the wiring harness side of the connector.
(2) Ignition switch "ACC".
(3) Measure the voltage between C-54 CAN box unit connector terminal No.10 and body earth.

OK: System voltage

Q: Is the check result normal?
YES : Replace the CAN box unit.
NO : Go to Step 8

STEP 8. Check the wiring harness between C-54 CAN box unit connector terminal No.10 and C-139 intermediate connector terminal No.1.
- Check the power supply lines (battery power supply) for open circuit and short circuit.

Q: Is the check result normal?
YES : The trouble can be an intermittent malfunction (Refer to GROUP 00 – How to use Troubleshooting/inspection Service Points – How to Cope with Intermittent Malfunction).
NO : Repair the wiring harness.

www.cargeek.ir

www.CarGeek.ir

ETACS CUSTOMISATION FUNCTION <VEHICLES FOR RUSSIA>

M1546023000776

	Система дистанционного управления замками дверей		
		Включение указателей поворота	
			Заперто : одно нажатие Отперто: двойное нажатие (initial condition)
			Заперто : одно нажатие Отперто: выкл.
			Заперто : выкл. Отперто: двойное нажатие
			Заперто : двойное нажатие Отперто: одно нажатие
			Заперто : выкл. Отперто: одно нажатие
			Заперто : двойное нажатие Отперто: выкл.
			Заперто : выкл. Отперто: выкл.
		Система Keyless Entry <Vehicles with electric retractable remote controlled door mirrors>	
			Выкл.
			Наружные зеркала заднего вида : открытие/закрытие (initial condition)
		Кол–во нажатий кнопки блокировки для блокирования <Vehicles with dead lock system>	
			Двойное нажатие кнопки (initial condition)
			Одно нажатие кнопки
	Система Keyless		
		Включение указателей поворота	
			Заперто : одно нажатие Отперто: двойное нажатие (initial condition)
			Заперто : одно нажатие Отперто: выкл.
			Заперто : выкл. Отперто: двойное нажатие
			Заперто : двойное нажатие Отперто: одно нажатие
			Заперто : выкл. Отперто: одно нажатие
			Заперто : двойное нажатие Отперто: выкл.
			Заперто : выкл. Отперто: выкл.
		Система Keyless Operation <Vehicles with electric retractable remote controlled door mirror>	
			Выкл.
			Наружные зеркала заднего вида : открытие/закрытие (initial condition)
		Отпирание дверей и запуск двигателя без ключа	
			Обе функции включены (initial condition)
			Функция отпирания дверей без ключа включена
			Функция запуска двигателя без ключа включена
			Обе функции выключены
		Кол во нажатий кнопки блокировки для блокирования <Vehicles with dead lock system>	
			Двойное нажатие кнопки (initial condition)
			Одно нажатие кнопки

ACB01877

www.cargeek.ir

www.CarGeek.ir

	Стеклоочистители		
		Прерывистый режим работы стеклоочистителей <Vehicles without auto lamp>	
			4 секунды
			Переменная
			Переменная и зависимая от скорости (initial condition)
		Прерывистый режим работы стеклоочистителей <Vehicles with auto lamp>	
			4 секунды
			Переменная
			Переменная и зависимая от скорости
			Переменная и зависимая от дождя (initial condition)
		Вкл. стеклоочист. при вкл. стеклоомыват.	
			Выкл.
			Вкл. (initial condition)
			Включение с задержкой завершения очистки
		Комфортный стеклоомыватель	
			Выкл. (initial condition)
			Вкл.
	Наружное освещение/ освещение салона		
		Функция автоматического выключения фар	
			Выкл.
			Вкл. (initial condition)
		Чувствительность автоматического включения фар <Vehicles with lighting control sensor>	
			Быстро
			Достаточно быстро
			Нормально (initial condition)
			Достаточно долго
			Долго
		Включение фар при выходе из автомобиля	
			Выкл.
			15 сек.
			30 сек. (initial condition)
			60 сек.
			180 сек.
		Вкл. наруж. освещ. при откр. безключевого замка.	
			Выкл. (initial condition)
			Стояночные осветительные приборы
			Фары
		Время выключения освещения салона	
			Выкл.
			3 минуты
			30 минут (initial condition)
			60 минут
		Продолжительность работы освещ. салона после закр.	
			0 секунд
			7,5 секунд
			15 секунд (initial condition)
			30 секунд
			60 секунд
			120 секунд
			180 секунд

ACB01878

www.cargeek.ir

www.CarGeek.ir

	Противоугонная сигнализация		
		Противоугонная сигнализация	
			Выкл. (initial condition)
			Вкл.
		Чувствитель ностьпротивоугонного датчика <Vehicles with security alarm>	
			Уровень 1 Высокая (initial condition)
			Уровень 2
			Уровень 3
			Уровень 4 Низкая
	Указатели поворота		
		Работа в основном положении	
			Зажигание включено или в положении ACC
			Зажигание включено (initial condition)
		Поворотн.(мигают 3 раз. после перемещ.подрул.перекл.)	
			Выкл.
			Вкл. (initial condition)
		Время активации поворотников	
			Короткий промежуток (initial condition)
			Долгий промежуток
	Электроприводы замков дверей		
		Авт запирание дверей если двер не были открыты	
			30 секунд (initial condition)
			60 секунд
			120 секунд
			180 секунд
		Отпирание дверей <Vehicles without dead lock system>	
			Все двери (initial condition)
			Только водительская дверь
		Автоматиче скоеотпирание дверей	
			Выкл. (initial condition)
			В полож. P
			В полож. блокировки
	Прочее		
		Автоматическое складывание зеркал <Vehicles without keyless entry system>	
			Автоматическое откр./закр отключено
			Открытие при определенной скорости (initial condition)
			Откр./закр. при вкл./выкл. зажиг. и откр./закр. вод. дв.
		Автоматическое складывание зеркал <Vehicles with keyless entry system>	
			Автоматическое откр./закр отключено
			Открытие при определенной скорости
			Откр./закр. при вкл./выкл. зажиг. и откр./закр. вод. дв.
			Синхронная работа с системой Keyless Entry (initial condition)
		Автоматич. откл. питания доп. оборудования	
			Автоматическое выключение отменено
			Автоматическое выключение через 30 минут (initial condition)
			Автоматическое выключение через 60 минут

ACB01879

www.cargeek.ir

www.CarGeek.ir

MAIN UNIT TERMINAL VOLTAGE

M1546003300946

MULTIVISION DISPLAY

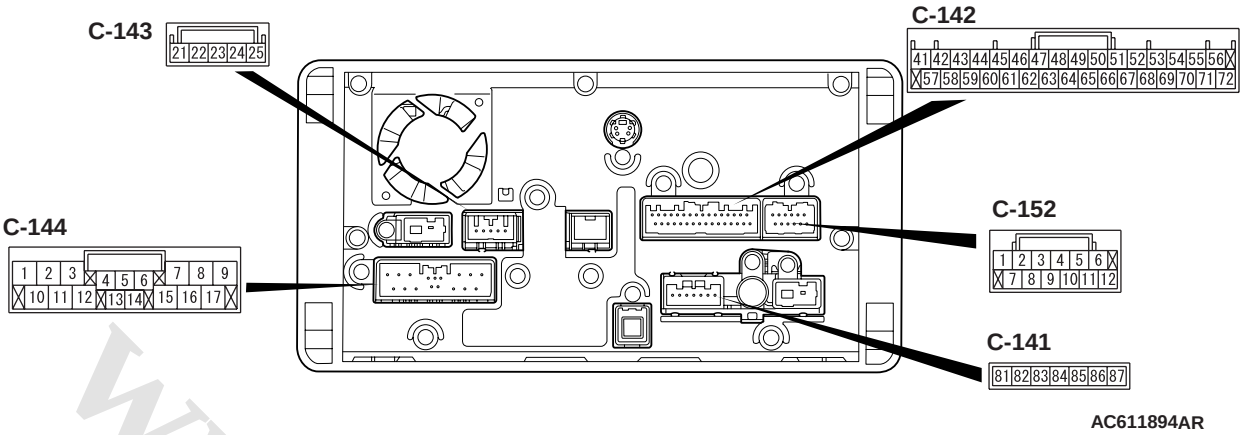

C-141

Terminal No.	Signal symbol	Check condition	Terminal voltage
81	ANTENNA POWER ON	Ignition switch: ACC position	System voltage (DC)
82	AMP POWER ON	Ignition switch: ACC position	1 V or less
83	IE-BUS (+)	Ignition switch: ACC position	More than 120mV
84	IE-BUS (-)	Ignition switch: ACC position	More than 120mV

C-142

Terminal No.	Signal symbol	Check condition	Terminal voltage
43	CAN-BOX DATA RX <Vehicles for RUSSIA>	Ignition switch: ACC position	2 - System voltage(DC)
45	HFM SIGNAL (+)	When the hands free ECU or USB box operation	1.2 Vrms (AC)
46	HFM SIGNAL (–)	When the hands free ECU or USB box operation	1 V or less
47	VIDEO2-IN	When the image is input	1Vp-p (AC)
48	VIDEO2-R	When the sound is input	1.2Vrms (AC)
49	SEIELD (VIDEO2-L/R)	Always	1 V or less
53	AUDIO REMOTE	Ignition switch: ACC position	3.3V (DC)
58	CAN-BOX DATA CLK <Vehicles for RUSSIA>	Ignition switch: ACC position	1 - 5V (DC)
59	CAN-BOX DATA TX <Vehicles for RUSSIA>	Ignition switch: ACC position	5V (DC)
61	HFM SIGNAL (+)-L	When the hands free ECU or USB box operation	1.2 Vrms (AC)
63	SEIELD (VIDEO2-IN)	Always	1 V or less
64	VIDEO2-L	When the sound is input	1.2Vrms (AC)
65	VIDEO2 DETECT	Always	1 V or less
69	SEIELD (STEERING REMO)	Always	1 V or less

www.cargeek.ir

www.CarGeek.ir

C-143

Terminal No.	Signal symbol	Check condition	Terminal voltage
21	BATTERY (+)	Always	System voltage
24	PS-R	Sift lever <M/T> or selector lever < A/T, CVT>: R position Ignition switch: ON position	Hi : 5Mid : OpenLo : 1 V or less
25	GND	Always	1 V or less

C-144

Terminal No.	Signal symbol	Check condition	Terminal voltage
2	SPEAKER RL (–)	When the sound is output	0 - System voltage (AC)
3	SPEAKER FL (–)	When the sound is output	0 - System voltage (AC)
6	AMP DATA	Ignition switch: ON	0 - System voltage (DC)
7	SPEAKER FR (–)	When the sound is output	0 - System voltage (AC)
8	SPEAKER RR (–)	When the sound is output	0 - System voltage (AC)
9	MAIN GND	Always	1 V or less
10	ILLUMINATION (+)	Tail lamp switch: ON	System voltage (DC)
11	SPEAKER RL (+)	When the sound is output	0 - System voltage (AC)
12	SPEAKER FL (+)	When the sound is output	0 - System voltage (AC)
13	VSS	Ignition switch: ON	0 - System voltage (pulse)
14	ACCESSORY (+)	Ignition switch: ACC position	System voltage (DC)
15	SPEAKER FR (+)	When the sound is output	0 - System voltage (AC)
16	SPEAKER RR (+)	When the sound is output	0 - System voltage (AC)
17	BATTERY (+)	Always	System voltage (DC)

C-152

Terminal No.	Signal symbol	Check condition	Terminal voltage
1	VCC (RC 6.5v)	• Ignition switch: ACC position • Sift lever <M/T> or selector lever <CVT>: R position	5.8 - 7.0V (DC)
2	GND	Always	1 V or less
3	CAMERA SIGNAL	• Ignition switch: ACC position • Sift lever <M/T> or selector lever <CVT>: R position	1Vp-p (AC)
5	SEIELD (CAMERA)	Always	1 V or less
6	CAMERA DETECT	• Ignition switch: ACC position • Sift lever <M/T> or selector lever <CVT>: R position	5V (DC)

www.cargeek.ir

www.CarGeek.ir

CAN BOX UNIT <VEHICLES FOR RUSSIA>

AC611333

C-54

Terminal No.	Signal symbol	Check condition	Terminal voltage
1	GND	Always	1 V or less
2	BATTERY (+)	Always	System voltage (DC)
4	TX (AND)	Ignition switch: ACC position	0 - 5V (DC)
5	RX (AND)	Ignition switch: ACC position	2 - System voltage (DC)
6	CAN-BOX DATA CLK	Ignition switch: ACC position	1 - 5V (DC)
8	CAN-H	–	–
9	CAN-L	–	–
10	ACCESSORY (+)	Ignition switch: ACC position	System voltage (DC)

REMOVAL AND INSTALLATION

M1546001000897

MULTIVISION DISPLAY

Pre-removal operation	Post-installation operation
• Removal of Instrument centre panel (Refer to GROUP 52A – Instrument Centre Panel assembly)	• Installation of Instrument centre panel (Refer to GROUP 52A – Instrument Centre Panel assembly)

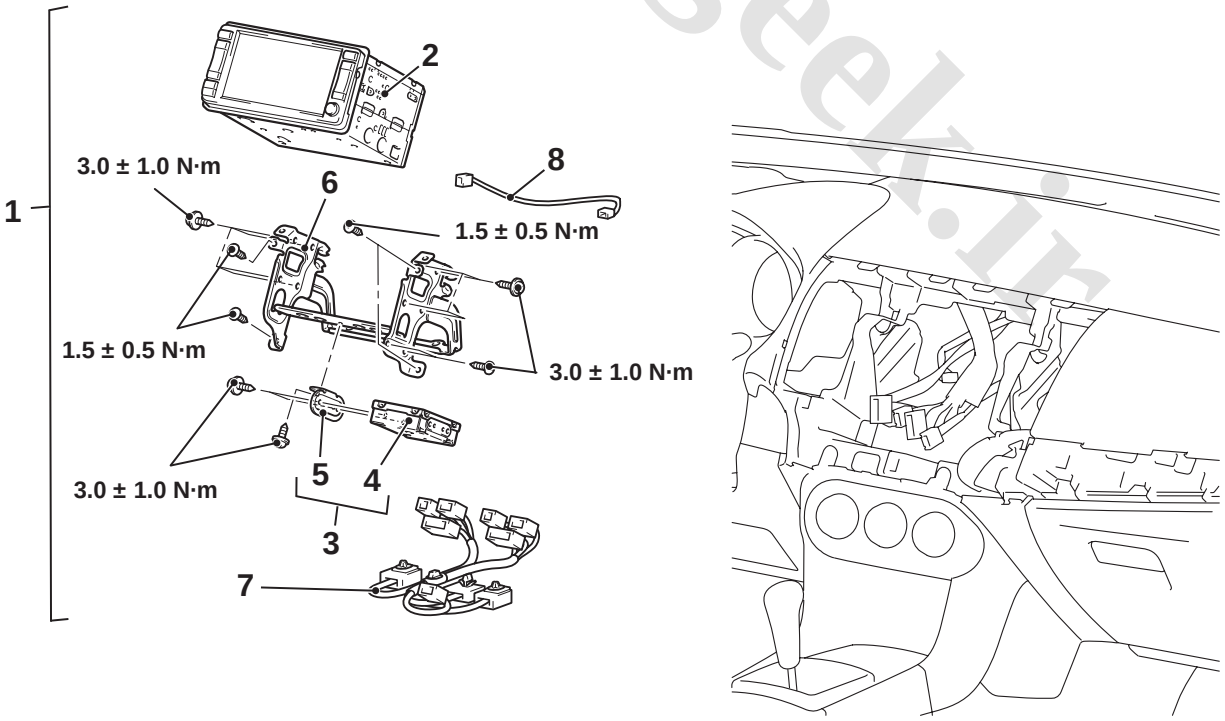

AC709965AB

www.cargeek.ir

www.CarGeek.ir

Removal Steps

1. Multivision display assembly
>>**A**<< 2. Multivision display
3. CAN box unit assembly <Vehicles for RUSSIA>
4. CAN box unit <Vehicles for RUSSIA>
5. CAN box unit bracket <Vehicles for RUSSIA>

Removal Steps (Continued)

6. Bracket (LH/RH)
7. Navigation harness
8. TMC cable

INSTALLATION SERVICE POINT

>>A<< MULTIVISION DISPLAY

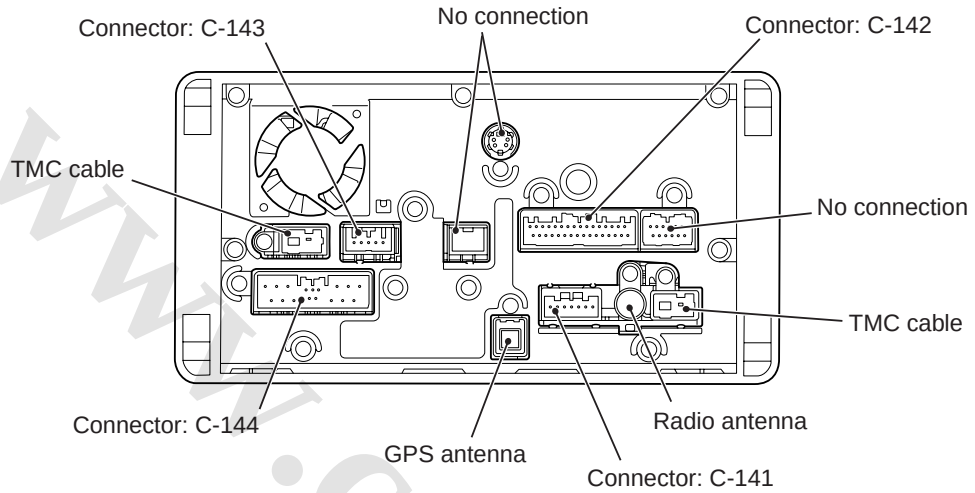

AC802116AI

The connectors, antenna and cables connected to the multivision display are shown in the figure.

GPS antenna

Pre-removal operation	Post-installation operation
• Removal of multivision display assembly	• Installation of multivision display assembly

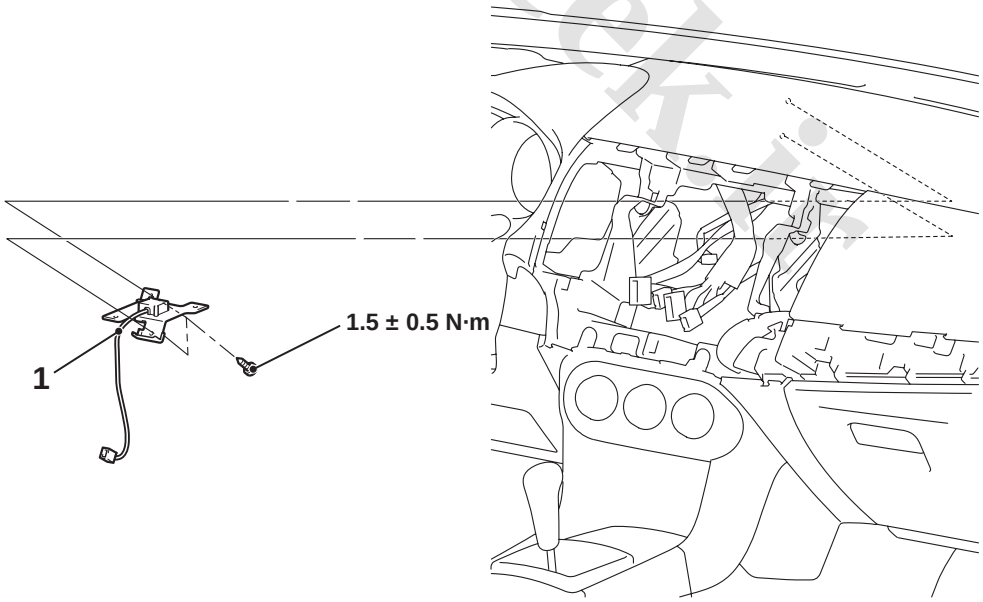

AC709281

Removal Step

1. GPS antenna

www.cargeek.ir

www.CarGeek.ir

Audio and video adaptor

Pre-removal operation	Post-installation operation
• Removal of instrument panel centre lower (Refer to GROUP 52A – Instrument Centre Panel assembly)	• Installation of instrument panel centre lower (Refer to GROUP 52A – Instrument Centre Panel assembly)

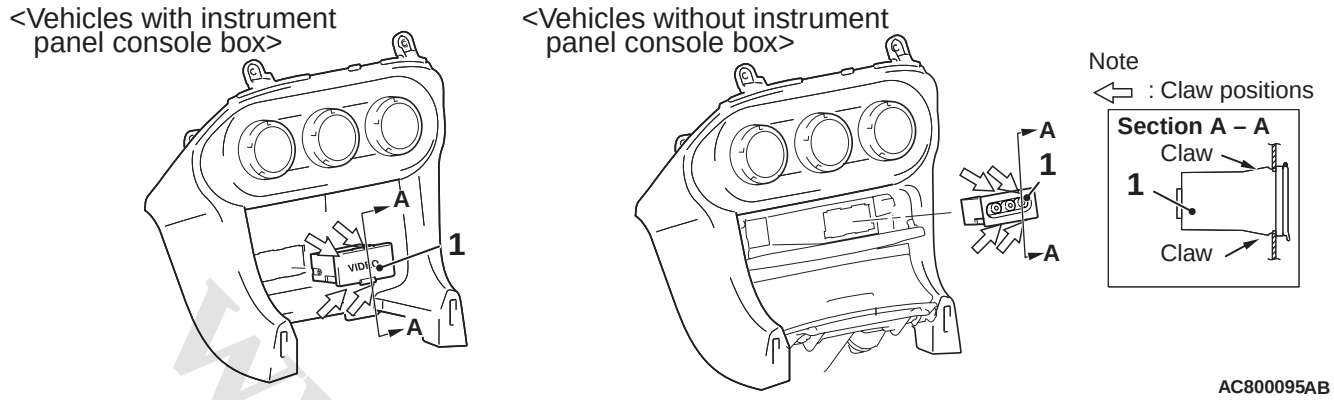

Removal Step

1. Audio and video adaptor

INSPECTION

AUDIO AND VIDEO ADAPTER INSPECTION

M1546312900011

1. Remove the audio and video adapter.(Refer to .)
2. Check that continuity exists between the terminal and the pin jack of audio and video adapter.

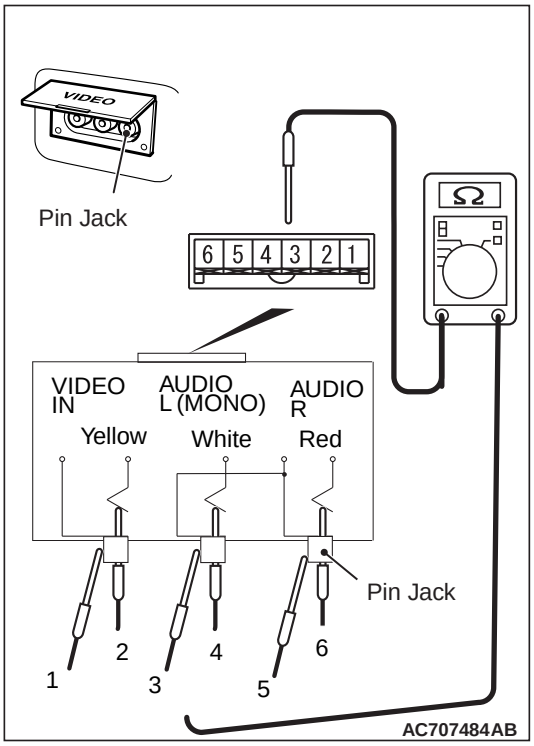

The connection position of pin jack side circuit tester	Terminal number	Measurement value
1	2	Continuity exists (2 Ω or less)
2	1	
3	5	
4	4	
5	5	
6	6	

www.cargeek.ir

www.CarGeek.ir

STEERING WHEEL AUDIO REMOTE CONTROL SWITCH

SPECIAL TOOLS

M1544000600663

www.cargeek.ir

www.cargeek.ir

www.CarGeek.ir

Tool	Number	Name	Use
a 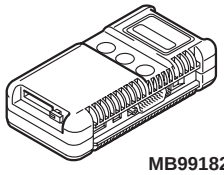 MB991824 b 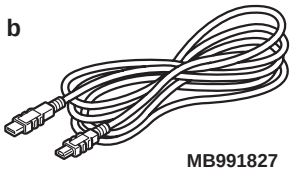 MB991827 c 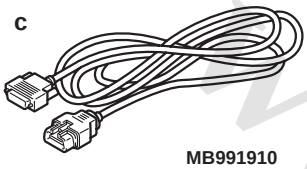 MB991910 d 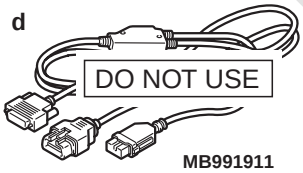 DO NOT USE MB991911 e 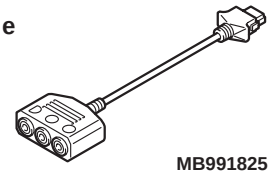 MB991825 f 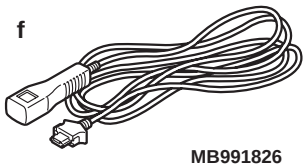 MB991826 MB991955	MB991955 a. MB991824 b. MB991827 c. MB991910 d. MB991911 e. MB991825 f. MB991826	M.U.T.-III sub-assembly a. Vehicle Communication Interface (V.C.I.) b. M.U.T.-III USB cable c. M.U.T.-III main harness A (Vehicles with CAN communication system) d. M.U.T.-III main harness B (Vehicles without CAN communication system) e. M.U.T.-III measure adapter f. M.U.T.-III trigger harness	⚠ CAUTION **For vehicles with CAN communication, use M.U.T.-III main harness A to send simulated vehicle speed. If you connect M.U.T.-III main harness B instead, the CAN communication does not function correctly.** Diagnosis code and service data check.
a 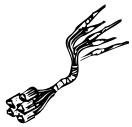 b 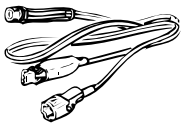 c 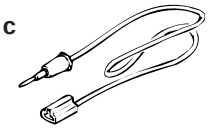 d DO NOT USE MB991223	MB991223 a. MB991219 b. MB991220 c. MB991221 d. MB991222	Harness set a. Check harness b. LED harness c. LED harness adapter d. Probe	Continuity check and voltage measurement at harness wire or connector a. For checking connector pin contact pressure b. For checking power supply circuit c. For checking power supply circuit d. For connecting a locally sourced tester

www.cargeek.ir

www.CarGeek.ir

Tool	Number	Name	Use
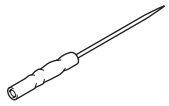 MB992006	MB992006	Extra fine probe	Continuity check and voltage measurement at harness wire or connector

TROUBLESHOOTING

STANDARD FLOW OF DIAGNOSTIC TROUBLESHOOTING

M1544004800614

Refer to GROUP 00 – Contents of troubleshooting .

TROUBLE SYMPTOM CHART

M1544004901346

Inspection Procedure No.	Trouble symptom		Reference page
1	Steering wheel audio remote control switch does not function	<Vehicles with radio and CD player>	
		<Vehicles with MMCS>	
2	Steering wheel audio remote control switch illumination does not come on.		

www.cargeek.ir

www.cargeek.ir

www.CarGeek.ir

SYMPTOM PROCEDURES

Inspection Procedure 1: Steering wheel audio remote control switch does not function. <Vehicles with radio and CD player>

Steering Wheel Audio Remote Control Switch Circuit

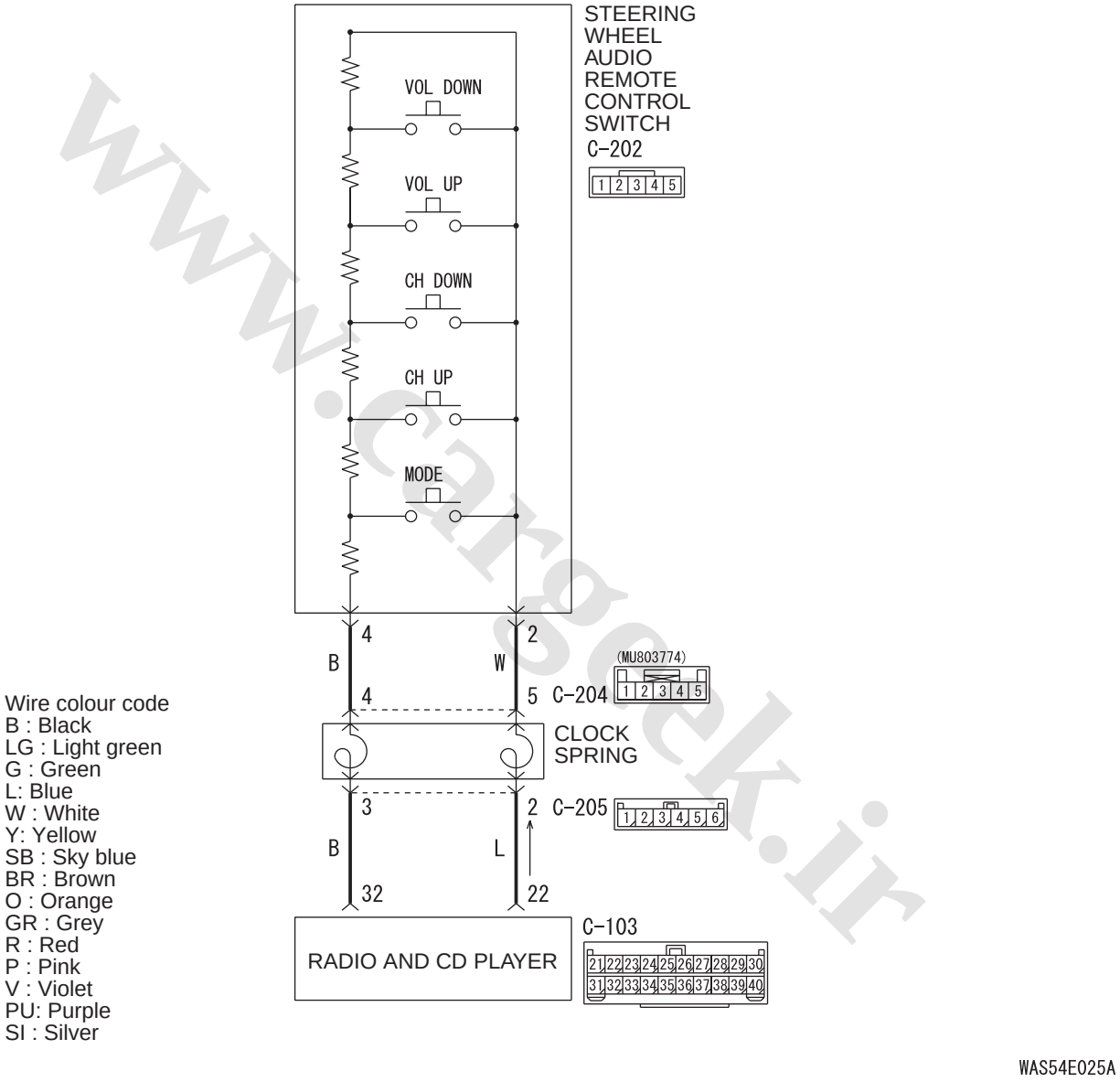

www.cargeek.ir

www.CarGeek.ir

Connector: C-103 <LHD>

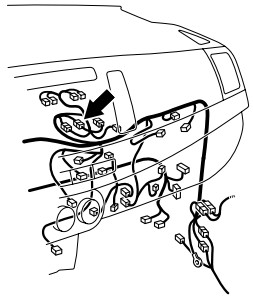

AC701094AJ

Connectors: C-103, C-105 <RHD>

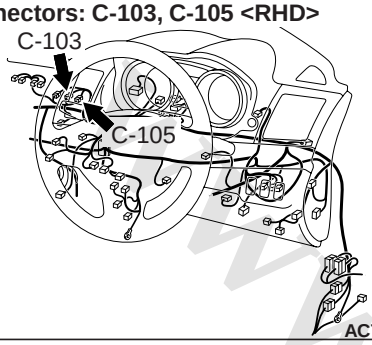

AC701122 AV

Connectors: C-202, C-204, C-205 <LHD>

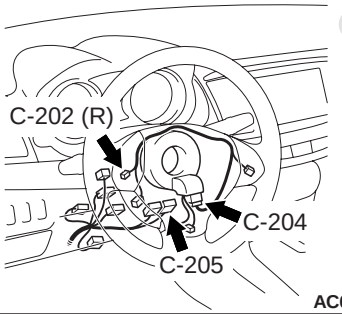

AC612708 AQ

Connectors: C-202, C-204, C-205 <RHD>

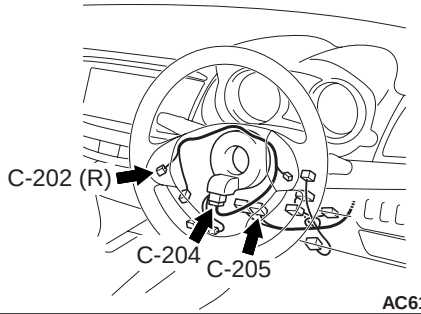

AC612716 AD

TECHNICAL DESCRIPTION (COMMENT)

The power supply circuit to the steering wheel audio remote control switch, the steering wheel audio remote control switch, the radio and CD player, or the clock spring may be defective.

TROUBLESHOOTING HINTS

- Malfunction of steering wheel audio remote control switch
- Malfunctions of radio and CD player
- Malfunction of the clock spring
- Damaged harness wires and connectors

DIAGNOSIS PROCEDURE

STEP 1. M.U.T.-III data list

Check whether the service data below are normal. (Refer to .)

(1) Turn the ignition switch to "ON" position.

(2) Operate each switch of the steering remote control. Check whether the normal conditions listed below are displayed.

Item No.	Item name	Normal condition
Item 1	RADIO remote SW (SEEK-)	ON
Item 2	RADIO remote SW (SEEK+)	ON
Item 3	RADIO remote SW (MODE)	ON
Item 4	RADIO remote SW (VOL-)	ON
Item 5	RADIO remote SW (VOL+)	ON

OK: Normal condition is displayed.

Q: Is the check result normal?

YES : Replace the audio unit.

NO : Go to Step 2.

STEP 2. Check the steering wheel audio remote control switch.

Check the continuity of the steering wheel audio remote control switch (Refer to).

Q: Is the check result normal?

YES : Go to Step 3.

NO : Replace the remote controlled radio switch.

STEP 3. Connector check: C-204 and C-205 clock spring connector

Q: Is the check result normal?

YES : Go to Step 4.

NO : Repair the defective connector.

STEP 4. Check the clock spring.

Check whether the clock spring is in good condition. Refer to GROUP 52B – Driver's Air bag module and clock spring .

Q: Is the check result normal?

YES : Go to Step 5.

NO : Replace the clock spring.

STEP 5. Connector check: C-103 radio and CD player connector

Q: Is the check result normal?

www.cargeek.ir

www.CarGeek.ir

YES : Go to Step 6.
NO : Repair the defective connector.

STEP 6. Check the wiring harness between C-103 radio and CD player connector terminal No.22, 32 and C-205 clock spring connector terminal No.2, 3.

- Check the communication lines for open circuit or short circuit.

Q: Is the check result normal?
YES : Go to Step 7.
NO : Repair the wiring harness.

STEP 7. Connector check: C-202 steering wheel audio remote control switch connector

Q: Is the check result normal?
YES : Go to Step 8.
NO : Repair the defective connector.

STEP 8. Check the wiring harness between C-202 steering wheel audio remote control switch connector terminal No.2, 4 and C-204 clock spring connector terminal No.5, 4.

- Check the communication lines for open circuit or short circuit.

Q: Is the check result normal?
YES : Go to Step 9.
NO : Repair the wiring harness.

STEP 9. Retest the system

Check whether you can operate the radio and CD player by using the steering wheel audio remote control switch.

Q: Is the check result normal?
YES : The trouble can be an intermittent malfunction (Refer to GROUP 00 – How to use Troubleshooting/inspection Service Points – How to Cope with Intermittent Malfunction).
NO : Replace the radio and CD player.

www.cargeek.ir
www.cargeek.ir

www.CarGeek.ir

Inspection Procedure 1: Steering wheel audio remote control switch does not function. <Vehicles with MMCS>

Steering Wheel Audio Remote Control Switch Circuit

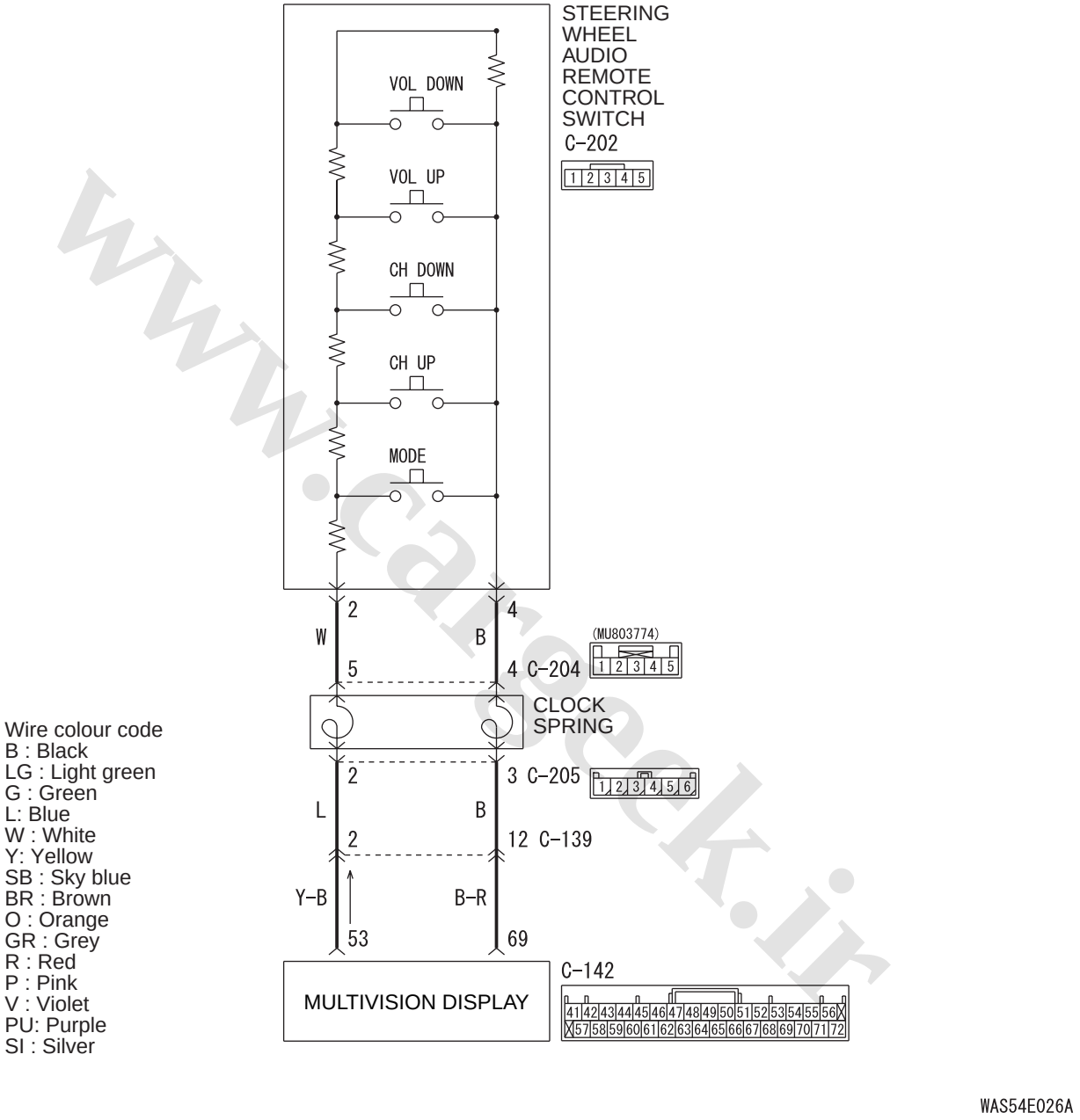

www.cargeek.ir

www.CarGeek.ir

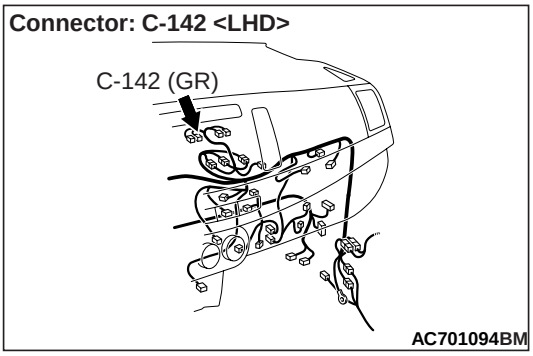

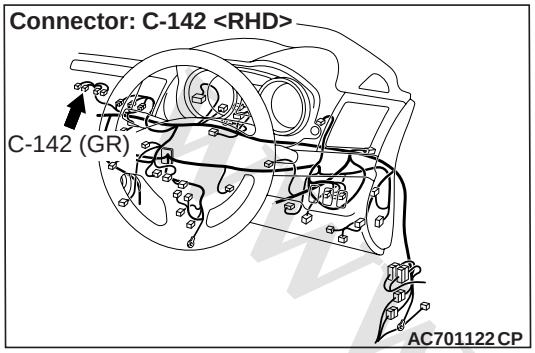

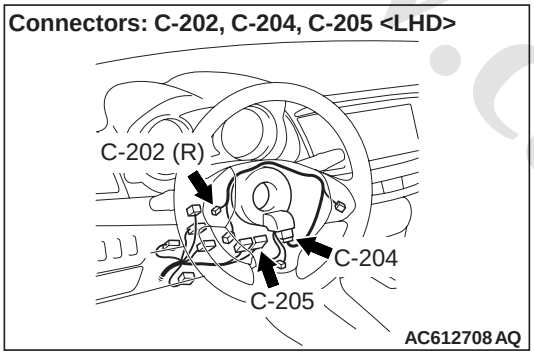

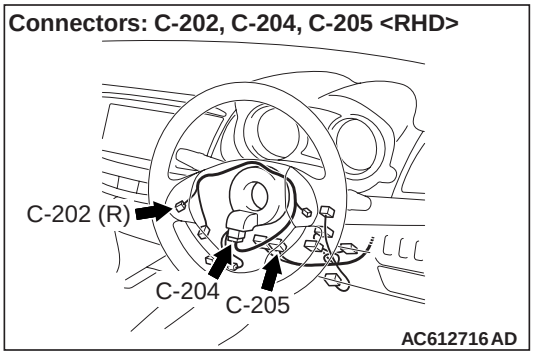

TECHNICAL DESCRIPTION (COMMENT)

The power supply circuit to the steering wheel audio remote control switch, the steering wheel audio remote control switch, the multivision display, or the clock spring may be defective.

TROUBLESHOOTING HINTS

- Malfunction of steering wheel audio remote control switch
- Malfunctions of multivision display
- Malfunction of the clock spring
- Damaged harness wires and connectors

DIAGNOSIS PROCEDURE

STEP 1. Check the steering wheel audio remote control switch.

Check the continuity of the steering wheel audio remote control switch (Refer to).

Q: Is the check result normal?
YES : Go to Step 2.
NO : Replace the remote controlled radio switch.

STEP 2. Connector check: C-202 steering wheel audio remote control switch connector

Q: Is the check result normal?
YES : Go to Step 3.
NO : Repair the defective connector.

STEP 3. Connector check: C-205 and C-204 clock spring connector

Q: Is the check result normal?
YES : Go to Step 4.
NO : Repair the defective connector.

STEP 4. Check the clock spring.

Check whether the clock spring is in good condition (Refer to GROUP 52B – Driver's Air bag module and clock spring).

Q: Is the check result normal?
YES : Go to Step 5.
NO : Replace the clock spring.

STEP 5. Connector check: C-142 multivision display connector

Q: Is the check result normal?
YES : Go to Step 6.
NO : Repair the defective connector.

STEP 6. Check the wiring harness between C-142 multivision display connector terminal No.53, 69 and C-205 clock spring connector terminal No.2, 3.

NOTE: Prior to the wiring harness inspection, check intermediate connector C-139, and repair if necessary.

- Check the communication lines for open circuit or short circuit.

Q: Is the check result normal?
YES : Go to Step 7.
NO : Repair the wiring harness.

www.cargeek.ir

www.CarGeek.ir

STEP 7. Connector check: C-202 steering wheel audio remote control switch connector

Q: Is the check result normal?
YES : Go to Step 8.
NO : Repair the defective connector.

STEP 8. Check the wiring harness between C-213 steering wheel audio remote control switch connector terminal No.2, 4 and C-202 clock spring connector terminal No.5, 4.

- Check the communication lines for open circuit or short circuit.

Q: Is the check result normal?
YES : Go to Step 9.
NO : Repair the wiring harness.

STEP 9. Retest the system

Check whether you can operate the multivision display by using the steering wheel audio remote control switch.

Q: Is the check result normal?
YES : The trouble can be an intermittent malfunction (Refer to GROUP 00 – How to use Troubleshooting/inspection Service Points – How to Cope with Intermittent Malfunction).
NO : Replace the multivision display.

Inspection Procedure 2: Steering wheel audio remote control switch illumination does not come on.

Steering Wheel Audio Remote Control Switch Illumination Circuit

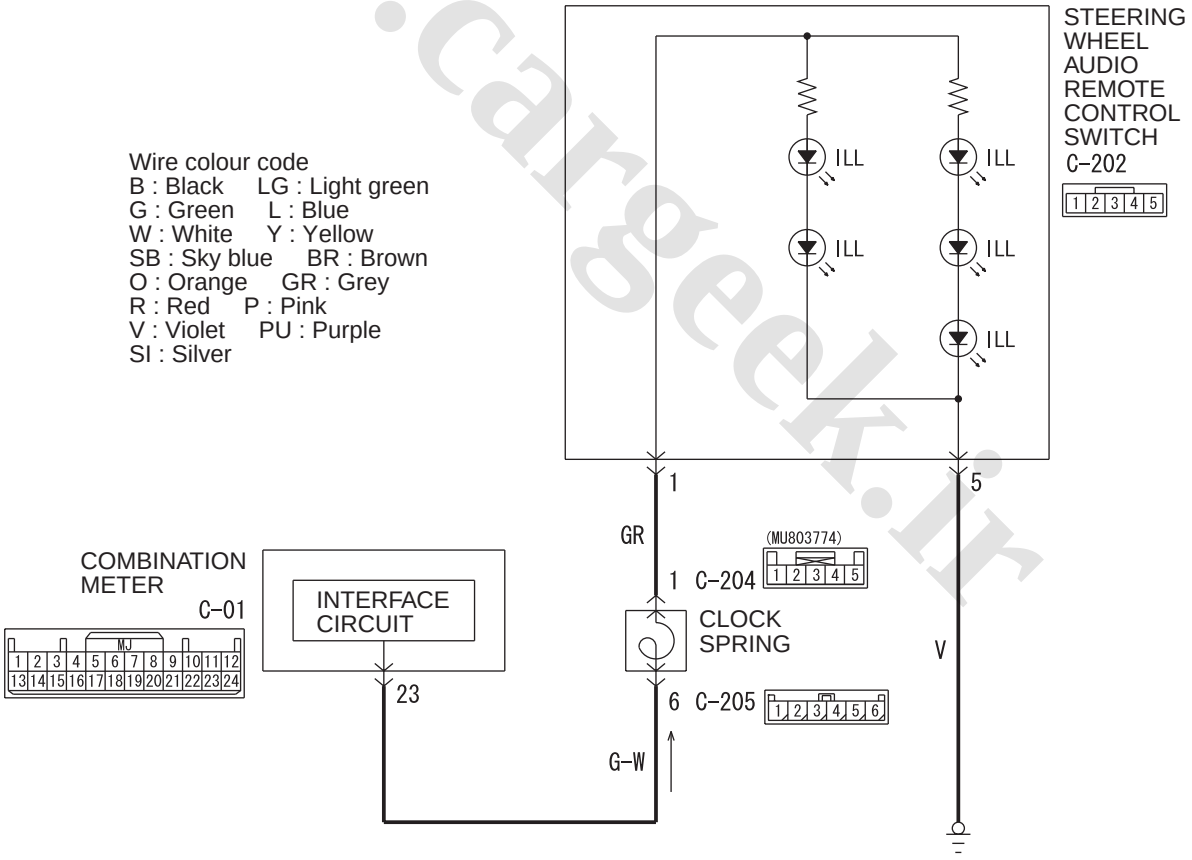

www.cargeek.ir

www.CarGeek.ir

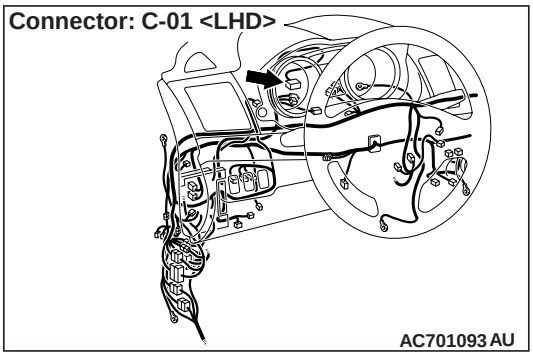

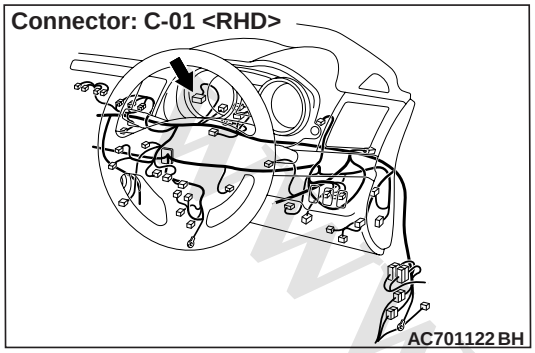

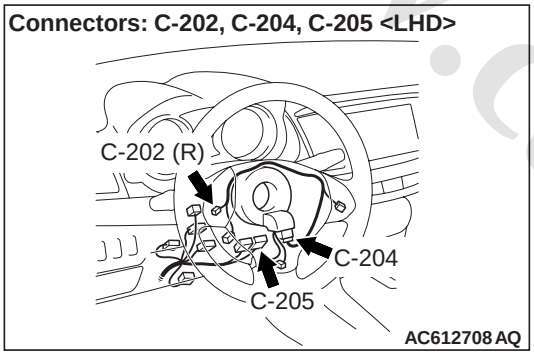

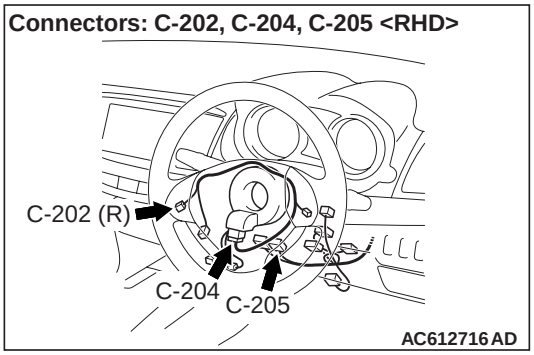

TECHNICAL DESCRIPTION (COMMENT)

The power supply circuit to the steering wheel audio remote control switch, the steering wheel audio remote control switch, the combination meter, or the clock spring may be defective.

PROBABLE CAUSES

- Malfunction of steering wheel audio remote control switch
- Malfunctions of combination meter
- Malfunction of the clock spring
- Damaged harness wires and connectors

DIAGNOSIS PROCEDURE

STEP 1. Connector check: C-202 steering wheel audio remote control switch connector

Q: Is the check result normal?
YES : Go to Step 2.
NO : Repair the defective connector.

STEP 2. Voltage measurement at C-202 steering wheel audio remote control switch connector.

(1) Disconnect the connector, and measure at the wiring harness side.
(2) Turn the ignition switch to the "ACC" position, and turn the tail lamp switch to the "ON" position.
(3) Measure the voltage between terminal No.1 and body earth.

OK: System voltage

Q: Is the check result normal?
YES : Go to Step 3.
NO : Go to Step 5.

STEP 3. Check the wiring harness between C-202 steering wheel audio remote control switch connector terminal No.5 and body earth.

- Check the earth wire for open circuit.

Q: Is the check result normal?
YES : Go to Step 4.
NO : Repair the wiring harness.

STEP 4. Check the steering wheel audio remote control switch.

Illumination check. (Refer to .)

Q: Is the check result normal?
YES : Go to Step 11.
NO : Replace the steering wheel voice control switch.

STEP 5. Connector check: C-204 and C-205 clock spring connectors

Q: Is the check result normal?
YES : Go to Step 6.
NO : Repair the defective connector.

STEP 6. Check the clock spring.

Check whether the clock spring is in good condition (Refer to GROUP 52B – Driver's Air bag module and clock spring).

Q: Is the check result normal?

www.cargeek.ir

www.CarGeek.ir

YES : Go to Step 7.
NO : Replace the clock spring.

STEP 7. Check the wiring harness between C-202 steering wheel audio remote control switch connector terminal No.1 and C-204 clock spring connector terminal No.1.

- Check the power supply line open or short circuit.

Q: Is the check result normal?
YES : Go to Step 8.
NO : Repair the wiring harness.

STEP 8. Connector check: C-01 combination meter connector

Q: Is the check result normal?
YES : Go to Step 9.
NO : Repair the defective connector.

STEP 9. Check the wiring harness between C-01 combination meter connector terminal No.23 and C-205 clock spring connector terminal No.6.

- Check the power supply line open or short circuit.

Q: Is the check result normal?
YES : Go to Step 10.
NO : Repair the wiring harness.

STEP 10. Check the audio illumination.
Check whether the illumination of the audio control panel comes on normally.

Q: Is the check result normal?
YES : Go to Step 11.
NO : Refer to radio and CD player Inspection Procedure 5 "Audio illuminations does not work normally." . and then go to Step 11.

STEP 11. Retest the system
Check whether the illumination of the steering wheel audio remote control switch comes on normally.

Q: Is the check result normal?
YES : The trouble can be an intermittent malfunction (Refer to GROUP 00 – How to use Troubleshooting/inspection Service Points – How to Cope with Intermittent Malfunction).
NO : Replace the steering wheel audio remote control switch.

SERVICE DATA

M1544014100111

Refer to Radio and CD player .

REMOVAL AND INSTALLATION

M1544015600294

⚠ WARNING

- ***Before removing the air bag module, refer to GROUP 52B, Service Precautions and Driver's, Front Passenger's Air Bag Module and Clock Spring .***
- ***When removing and installing the steering wheel, do not let it bump against the air bag module.***

Pre-removal operation	Post-installation operation
• Removal of driver's air bag module (Refer to GROUP 52B, Driver's, Front Passenger's Air Bag Module and Clock Spring).	• Installation of driver's air bag module (Refer to GROUP 52B, Driver's, Front Passenger's Air Bag Module and Clock Spring).

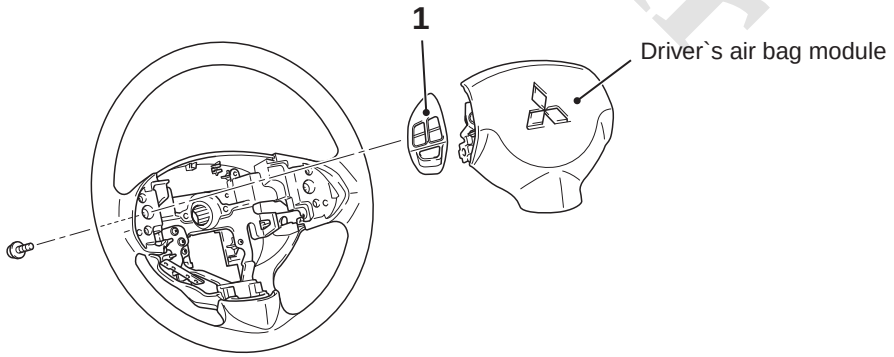

AC605239AD

Removal Step

1. Steering wheel audio remote control switch

www.cargeek.ir

www.CarGeek.ir

STEERING WHEEL AUDIO REMOTE CONTROL SWITCH INSPECTION

M1544015700398

STEERING WHEEL AUDIO REMOTE CONTROL SWITCH CHECK

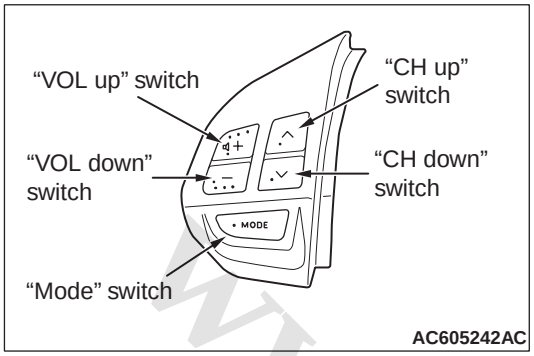

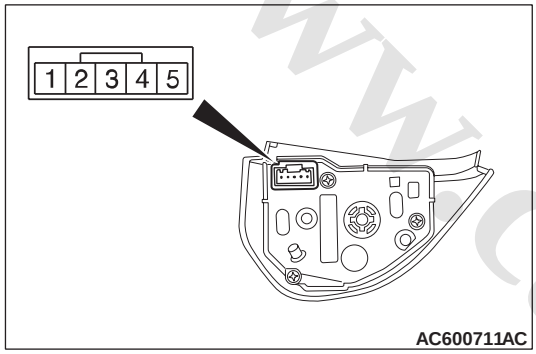

Use an ohmmeter to measure the resistance value between the terminal.

Switch Position	Tester Connection	Measurement Value
No push	2 – 3	Approximately 3.1 kΩ
	2 – 4	Approximately 71 kΩ
"Mode" switch		Approximately 270 Ω
"CH up" switch		Approximately 740 Ω
"CH down" switch		Approximately 1.3 kΩ
"VOL up" switch		Approximately 2.1 kΩ
"VOL down" switch		Approximately 3.1 kΩ

ILLUMINATION CHECK

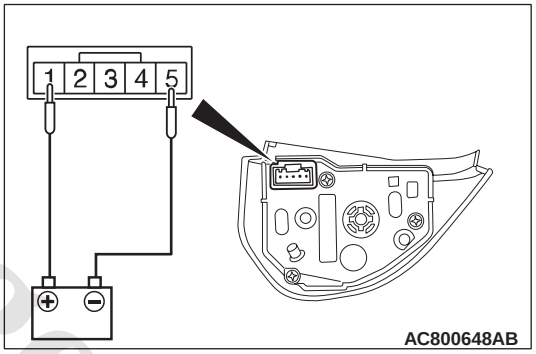

Apply the battery voltage of steering wheel audio remote control switch connector terminal No. 1 and 5, and check if the steering wheel audio remote control switch illuminates.

NOTE: Make sure that polarity is correct.

www.cargeek.ir

www.CarGeek.ir

USB BOX

SPECIAL TOOLS

M1549100300062

Tool	Number	Name	Use
a b c d DO NOT USE MB991223	MB991223 a. MB991219 b. MB991220 c. MB991221 d. MB991222	Harness set a. Check harness b. LED harness c. LED harness adapter d. Probe	Continuity check and voltage measurement at harness wire or connector a. For checking connector pin contact pressure b. For checking power supply circuit c. For checking power supply circuit d. For connecting a locally sourced tester
MB992006	MB992006	Extra fine probe	Continuity check and voltage measurement at harness wire or connector

TROUBLESHOOTING

STANDARD FLOW OF DIAGNOSTIC TROUBLESHOOTING

M1549100400069

Refer to GROUP 00 – Contents of troubleshooting .

DIAGNOSIS MODE <VEHICLES WITH RADIO AND CD PLAYER>

M1549101600044

Enter the diagnosis mode according to the following steps:

1. Turn the Ignition switch to the "ACC" or "ON" position and switch off the radio and CD player.

www.cargeek.ir

www.CarGeek.ir

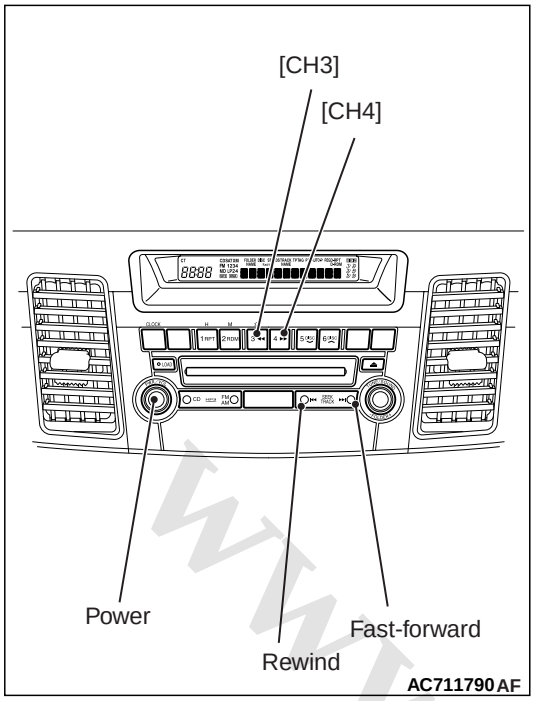

2. Press the following buttons in that order within sixty seconds from step (1).
   (1) [CH1] button.
   (2) Rewind button.
   (3) Fast-forward button.
   (4) [CH4] button.

NOTE: When the "Power" button of the radio and CD player is pressed during the diagnosis mode, the diagnosis mode will be cancelled, thus switching off the radio and CD player.

3. "USB - BOX DIAG" is displayed.

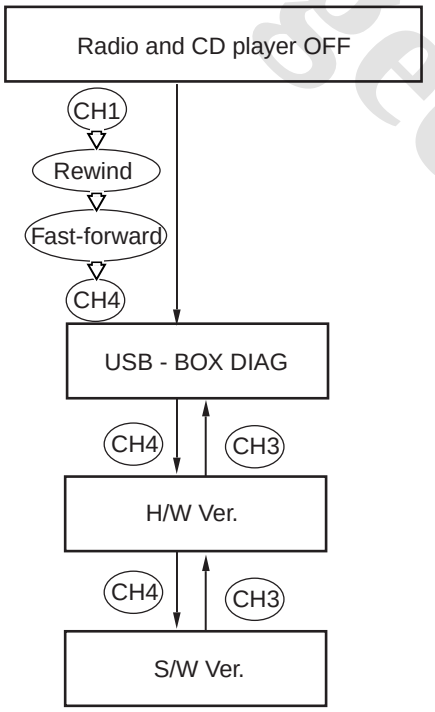

AC905418AB

www.cargeek.ir

www.CarGeek.ir

Description in the illustrations	Actual display	Condition
USB - BOX DIAG	USB - BOX DIAG	Displayed when the diagnosis mode is being entered.
H/W Ver.	H/W XX	Two-digit hardware version is displayed.
S/W Ver.	S/W XXXXXXX	Seven-digit software version is displayed.

DIAGNOSIS MODE <VEHICLES WITH MMCS>

M1549101600022

HOW TO INITIATE THE SERVICE MODE

Refer to MMCS - Service mode .

HOW TO TERMINATE THE SERVICE MODE

Refer to MMCS - Service mode .

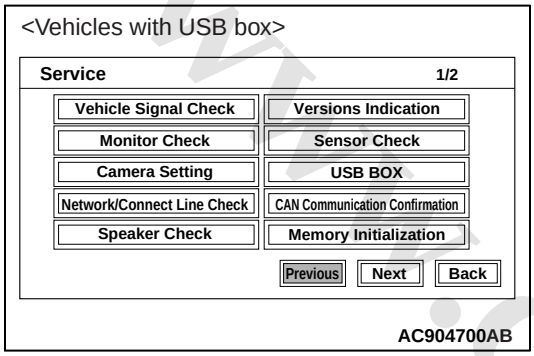

1. Select "USB BOX" on "Service" screen.

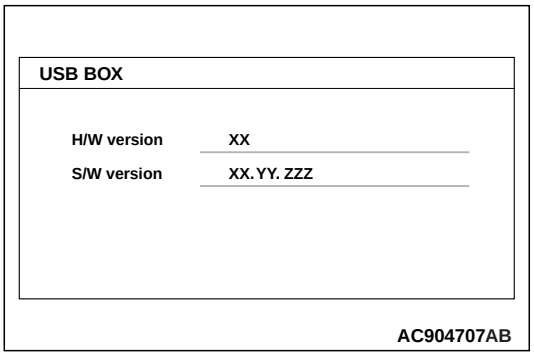

2. Displays the version information of the USB box.

   NOTE:
   - *H/W version: The hardware version information of the USB box is displayed in 2 digits.*
   - *S/W version: The software version information of the USB box is displayed in 7 digits.*

TROUBLE SYMPTOM CHART

M1549100500118

Trouble symptom		Reference page
The USB adapter data cannot be replayed.	<Vehicles with radio and CD player>	
	<Vehicles with MMCS>	

NOTE: If the radio and CD player or multivision display is reset or sound jump occurs at the auto start by Auto Stop & Go (AS&G) System, refer to .<Vehicles with Auto Stop & Go (AS&G) System>

www.cargeek.ir

www.CarGeek.ir

SYMPTOM PROCEDURES

The USB adapter data cannot be replayed. <Vehicles with radio and CD player>

⚠ CAUTION

Before replacing the USB box, ensure that the power supply circuit, the earth circuit and the communication circuit are normal.

Connectors: C-66, C-105 <LHD>

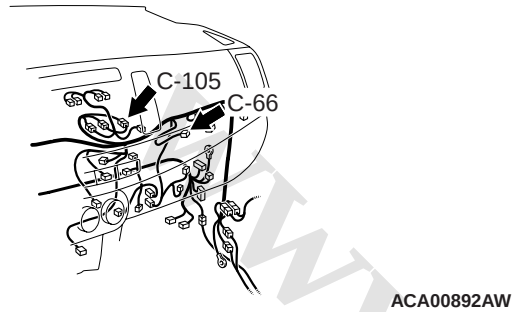

ACA00892AW

Connector: C-66 <RHD>

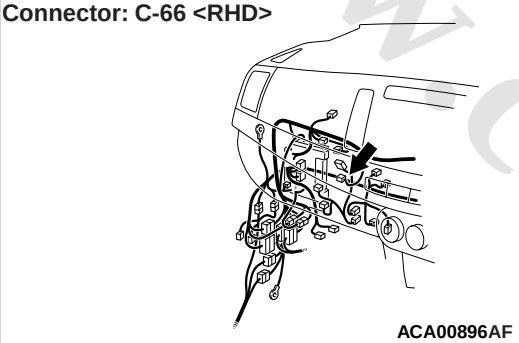

ACA00896AF

Connector: C-105 <RHD>

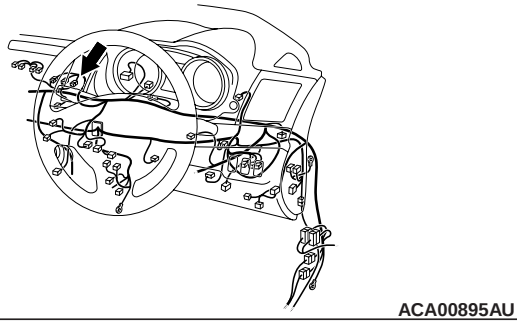

ACA00895AU

COMMENTS ON TROUBLE SYMPTOM

If the sound replay is impossible with the USB mode, the USB adapter, USB cable, USB box, or radio and CD player may be defective, or a communication error between the radio and CD player and USB box may have occurred.

NOTE:

- *"LSI ERROR" is displayed on the audio display when the USB box has an internal error. In this case, the USB box has an internal error.*
- *The ACC signal is received C-66 USB box connector terminal No.15 from C-105 radio and CD player connector terminal No.17.*
- *From the fusible link to C-128 intermediate connector, the USB box uses the same power supply circuit as that of AUDIO display (centre panel unit) as well as that of radio and CD player. Therefore, check first if the AUDIO display (centre panel unit) is displayed. If the AUDIO display (centre panel unit) is not displayed, carry out in advance the troubleshooting of "The radio and CD player does not operate normally by operating the audio control unit of the centre panel unit". (Refer to <Vehicles without Auto Stop & Go (AS&G) System> or <Vehicles with Auto Stop & Go (AS&G) System>..)*

PROBABLE CAUSES

- The radio and CD player may be defective.
- The USB box may be defective.
- The USB adapter may be defective.
- The USB cable may be defective.
- Damaged harness wires and connectors

DIAGNOSIS PROCEDURE

STEP 1. Check the radio and CD player operation.

Check if the radio and CD player work normally and the sound is output.

Q: Is the check result normal?

YES : Go to Step 2.

NO : Troubleshoot the radio and CD player (Refer to).

STEP 2. Check the external sounds input mode.

Check if the radio and CD player is switched to the "USB mode".

Q: Is the check result normal?

www.cargeek.ir

www.CarGeek.ir

YES : Go to Step 3.
NO : Switch to the "USB mode".

STEP 3. Check the audio display
Check if the audio display is displayed the "LSI ERROR".

Q: Is the check result normal?
YES : Go to Step 13.
NO : Go to Step 4.

STEP 4. Check the USB adapter.
Check if the USB adapter works normally.(Refer to)

Q: Is the check result normal?
YES : Go to Step 5.
NO : Replace the USB adapter.

STEP 5. Check the USB cable.
Check that the USB cable is connected to the USB adapter or USB box normally. Or check the USB cable for damage such as bend.

Q: Is the check result normal?
YES : Go to Step 6.
NO : Replace or repair the USB cable.

STEP 6. Connector check: C-66 USB box connector, C-128 intermediate connector

Q: Is the check result normal?
YES : Go to Step 7.
NO : Repair the defective connector.

STEP 7. Voltage measurement at C-66 USB box connector.
(1) Disconnect the connector, and measure at the wiring harness-side connector.
(2) Voltage between C-66 USB box connector terminal No.1 and the body earth

OK: System voltage

Q: Is the check result normal?
YES : Go to Step 9.
NO : Go to Step 8.

STEP 8. Check the wiring harness between C-66 USB box connector terminal No.1 and C-128 intermediate connector terminal No.9.
- Check the power supply lines (battery power supply) for open circuit and short circuit.

NOTE: Prior to the wiring harness inspection, check the intermediate connector C-31, C-128, and repair if necessary.

Q: Is the check result normal?
YES : The trouble can be an intermittent malfunction (Refer to GROUP 00 – How to use Troubleshooting/inspection Service Points – How to Cope with Intermittent Malfunction).
NO : Repair the wiring harness.

STEP 9. Resistance measurement at C-66 USB box connector.
(1) Disconnect C-66 USB box connector, and measure the resistance available at the wiring harness side of the connector.
(2) Check the continuity between terminal No.17 and body earth.

OK: Continuity exists (2 Ω or less)

Q: Is the check result normal?
YES : Go to Step 11.
NO : Go to Step 10.

STEP 10. Check the wiring harness between C-66 USB box connector terminal No.17 and body earth.
- Check the earth wires for open circuit.

NOTE: Prior to the wiring harness inspection, check the joint connector C-231, and repair if necessary.

Q: Is the check result normal?
YES : The trouble can be an intermittent malfunction (Refer to GROUP 00 – How to use Troubleshooting/inspection Service Points – How to Cope with Intermittent Malfunction).
NO : Repair the wiring harness.

STEP 11. Connector check: C-105 radio and CD player connector

Q: Is the check result normal?
YES : Go to Step 12.
NO : Repair the defective connector.

STEP 12. Check the wiring harness between C-105 radio and CD player connector terminal No. 12, 3, 1, 10, 17 and C-66 USB box connector terminal No. 8, 22, 2, 16, 15.
- Check the communication line for open circuit and short circuit.

Q: Is the check result normal?
YES : Go to Step 13.
NO : Repair the wiring harness.

www.cargeek.ir

www.CarGeek.ir

STEP 13. Replace the USB box temporarily, and check the trouble symptom.
Replace the USB box temporarily, and check that the sound is output from the speaker.

Q: Is the check result normal?

YES : Replace the USB box.
NO : Replace the radio and CD player.

The USB adapter data cannot be replayed. <Vehicles with MMCS>

⚠ CAUTION
Before replacing the USB box, ensure that the power supply circuit, the earth circuit and the communication circuit are normal.

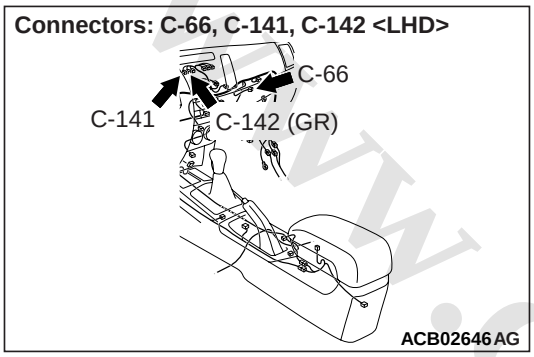

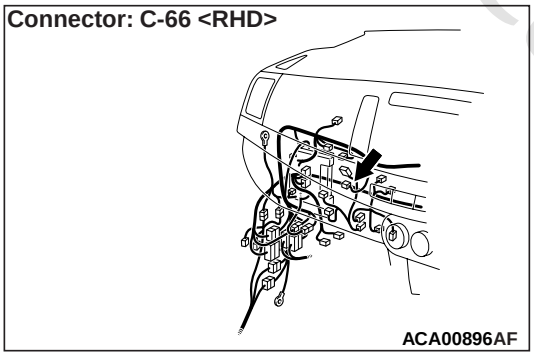

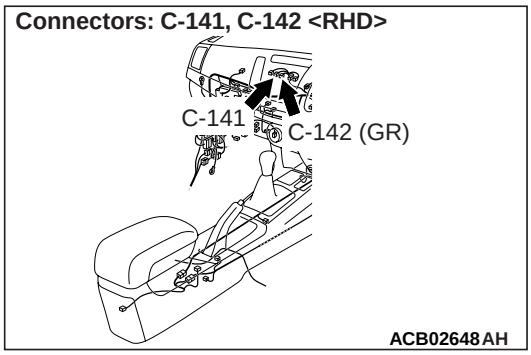

COMMENTS ON TROUBLE SYMPTOM
If the sound replay is impossible with the USB/iPod mode, the USB adapter, USB cable, USB box, or multivision display may be defective, or a communication error between the multivision display and USB box may have occurred.

NOTE:
- *The ACC signal is received C-66 USB box connector terminal No.15 from C-141 multivision display connector terminal No.17.*
- *From the fusible link to C-128 intermediate connector, the USB box uses the same power supply circuit as that of multivision display. Therefore, check first if the multivision display operates normally. If the multivision display does not operate normally, carry out in advance the troubleshooting of "No navigation screen is displayed". (Refer to <Vehicles without Auto Stop & Go (AS&G) System> or <Vehicles with Auto Stop & Go (AS&G) System>.)*

PROBABLE CAUSES
- The multivision display may be defective.
- The USB box may be defective.
- The USB adapter may be defective.
- The USB cable may be defective.
- Damaged harness wires and connectors

DIAGNOSIS PROCEDURE

STEP 1. Check the multivision display operation.
Check if the multivision display work normally and the sound is output.

Q: Is the check result normal?
YES : Go to Step 2.
NO : Troubleshoot the MMCS. (Refer to .)

STEP 2. Check the multivision display operation.
Display the A/V Mode screen, and check that the "USB/iPod" item is displayed.

Q: Is the check result normal?
YES : Go to Step 3.
NO : Go to Step 5.

www.cargeek.ir

www.CarGeek.ir

STEP 3. Check the USB adapter.
Check that the continuity exists between the front side terminals of USB adapter and rear side terminals of USB adapter.(Refer to)

Q: Is the check result normal?
YES : Go to Step 4.
NO : Replace the USB adapter.

STEP 4. Check the USB cable.
Check that the USB cable is connected to the USB adapter or USB box normally. Or check the USB cable for damage such as bend.

Q: Is the check result normal?
YES : Go to Step 13.
NO : Replace or repair the USB cable.

STEP 5. Connector check: C-66 USB box connector, C-128 intermediate connector

Q: Is the check result normal?
YES : Go to Step 6.
NO : Repair the defective connector.

STEP 6. Voltage measurement at C-66 USB box connector.
(1) Disconnect the connector, and measure at the wiring harness-side connector.
(2) Voltage between C-66 USB box connector terminal No.1 and the body earth

OK: System voltage

Q: Is the check result normal?
YES : Go to Step 8.
NO : Go to Step 7.

STEP 7. Check the wiring harness between C-66 USB box connector terminal No.1 and C-128 intermediate connector terminal No.10.
- Check the power supply lines (battery power supply) for open circuit and short circuit.

Q: Is the check result normal?
YES : The trouble can be an intermittent malfunction (Refer to GROUP 00 – How to use Troubleshooting/inspection Service Points – How to Cope with Intermittent Malfunction).
NO : Repair the wiring harness.

STEP 8. Resistance measurement at C-66 USB box connector.
(1) Disconnect C-66 USB box connector, and measure the resistance available at the wiring harness side of the connector.
(2) Check the continuity between terminal No.17 and body earth.

OK: Continuity exists (2 Ω or less)

Q: Is the check result normal?
YES : Go to Step 10.
NO : Go to Step 9.

STEP 9. Check the wiring harness between C-66 USB box connector terminal No.17 and body earth.
- Check the earth wires for open circuit.

Q: Is the check result normal?
YES : The trouble can be an intermittent malfunction (Refer to GROUP 00 – How to use Troubleshooting/inspection Service Points – How to Cope with Intermittent Malfunction).
NO : Repair the wiring harness.

STEP 10. Connector check: C-141, C-142 multivision display connector

Q: Is the check result normal?
YES : Go to Step 11.
NO : Repair the defective connector.

STEP 11. Check the wiring harness between C-141 multivision display connector terminal No 61, 45 and C-66 USB box connector terminal No 8, 22.
- Check the communication line for open circuit and short circuit.

NOTE: Prior to the wiring harness inspection, check intermediate connectors C-140, and repair if necessary.

Q: Is the check result normal?
YES : Go to Step 12.
NO : Repair the wiring harness.

STEP 12. Check the wiring harness between C-141 multivision display connector terminal No 83, 84, 82 and C-66 USB box connector terminal No 2, 16, 15.
- Check the communication line for open circuit and short circuit.

NOTE: Prior to the wiring harness inspection, check intermediate connectors C-140, and repair if necessary.

Q: Is the check result normal?

www.cargeek.ir

www.CarGeek.ir

YES : Go to Step 13.
NO : Repair the wiring harness.

STEP 13. Replace the USB box temporarily, and check the trouble symptom.
Replace the USB box temporarily, and check that the sound is output from the speaker.

Q: Is the check result normal?

YES : Replace the USB box.
NO : Replace the multivision display.

USB ADAPTER REMOVAL AND INSTALLATION

M1549100800216

Pre-removal operation	Post-installation operation
• Removal of glove box cover (Refer to GROUP 52A – glove box)	• Installation of glove box cover (Refer to GROUP 52A – glove box)

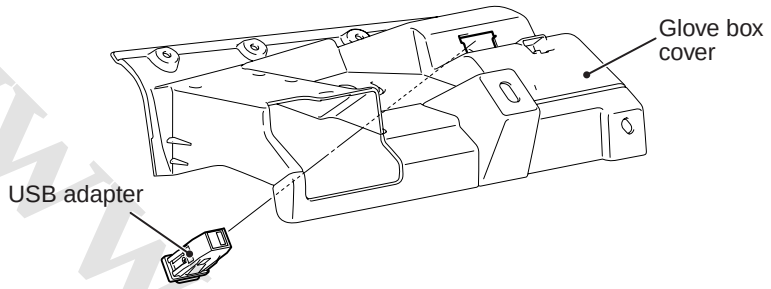

ACA00808AB

USB BOX REMOVAL AND INSTALLATION

M1549100900105

Pre-removal operation	Post-installation operation
• Removal of glove box cover (Refer to GROUP 52A – glove box)	• Installation of glove box cover (Refer to GROUP 52A – glove box)

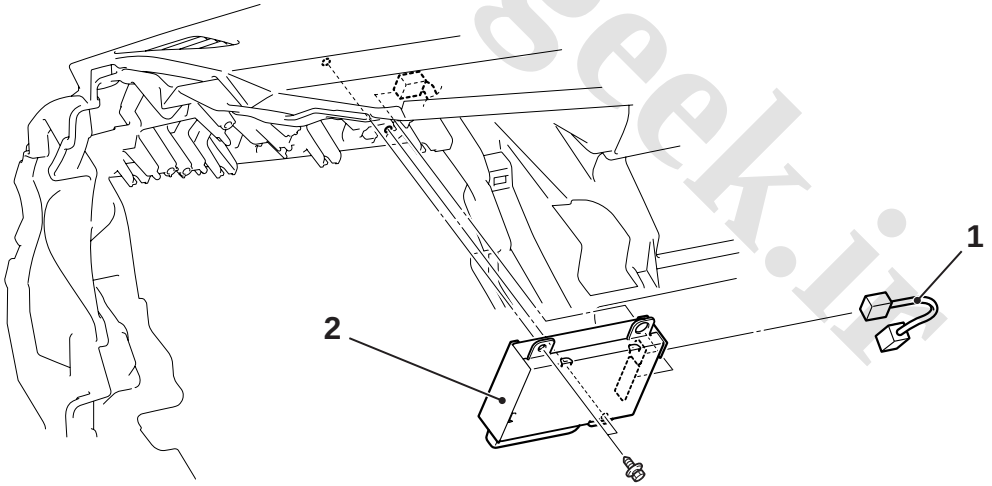

ACA00184AB

Removal Steps
1. USB cable
2. USB box

USB ADAPTER INSPECTION

M1549101100135

1. Remove the USB adapter. (Refer to)

www.cargeek.ir

www.CarGeek.ir

2. Check that the continuity exists between the front side terminals of USB adapter and rear side terminals of USB adapter.

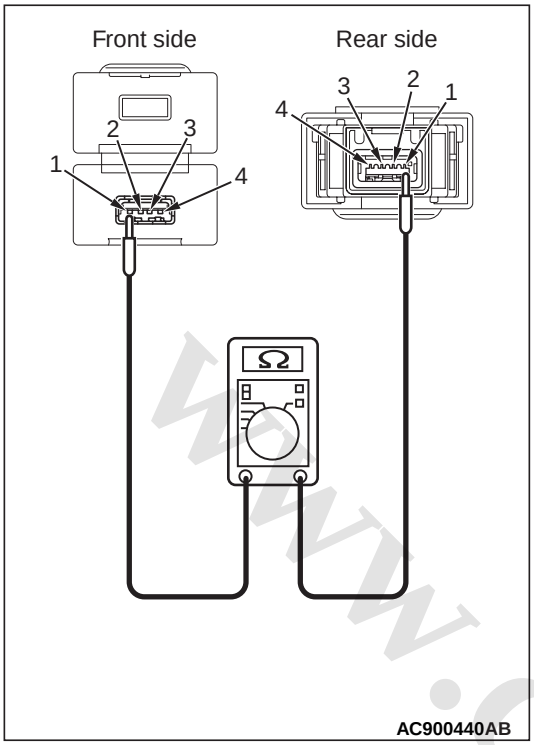

Front side terminal	Rear side terminal	Measurement value
1	1	Continuity exists (2 Ω or less)
2	2	
3	3	
4	4	

www.cargeek.ir

www.cargeek.ir

HANDS FREE ECU

SPECIAL TOOLS

M1544403500168

www.cargeek.ir

www.CarGeek.ir

Tool	Number	Name	Use
a 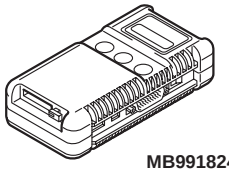 MB991824 b 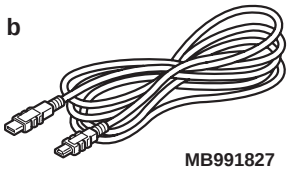 MB991827 c 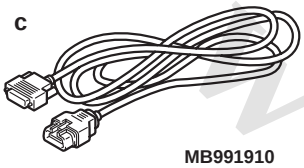 MB991910 d 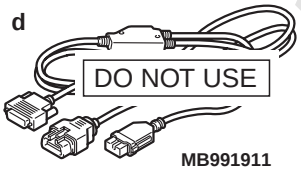 DO NOT USE MB991911 e 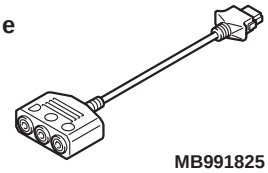 MB991825 f 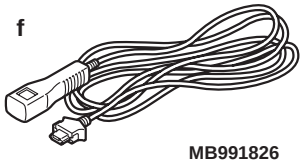 MB991826 MB991955	MB991955 a. MB991824 b. MB991827 c. MB991910 d. MB991911 e. MB991825 f. MB991826	M.U.T.-III sub-assembly a. Vehicle Communication Interface (V.C.I.) b. M.U.T.-III USB cable c. M.U.T.-III main harness A (Vehicles with CAN communication system) d. M.U.T.-III main harness B (Vehicles without CAN communication system) e. M.U.T.-III measure adapter f. M.U.T.-III trigger harness	⚠ CAUTION **For vehicles with CAN communication, use M.U.T.-III main harness A to send simulated vehicle speed. If you connect M.U.T.-III main harness B instead, the CAN communication does not function correctly.** CAN bus diagnostics, diagnosis code or service data check.
a 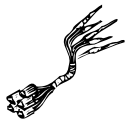 b 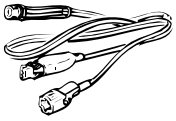 c 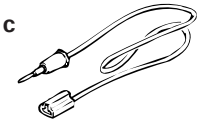 d DO NOT USE MB991223	MB991223 a. MB991219 b. MB991220 c. MB991221 d. MB991222	Harness set a. Check harness b. LED harness c. LED harness adapter d. Probe	Continuity check and voltage measurement at harness wire or connector a. For checking connector pin contact pressure b. For checking power supply circuit c. For checking power supply circuit d. For connecting a locally sourced tester

www.cargeek.ir

www.CarGeek.ir

Tool	Number	Name	Use
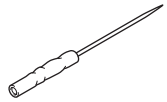 MB992006	MB992006	Extra fine probe	Continuity check and voltage measurement at harness wire or connector

TROUBLESHOOTING

INTRODUCTION TO DIAGNOSIS

M1544404500105

Prior to the troubleshooting, check if the causes below can be the case. If any, take actions according to the solution method.

Pairing of the Bluetooth®device (mobile phone or music player) and hands free ECU cannot be made.
The hands free ECU does not recognize the Bluetooth®device (mobile phone or music player)

Cause	SOLUTION
The power of the bluetooth®device is off.	With the power of the bluetooth®device turned on, check the trouble symptom again.
In addition to the bluetooth®device to be recognized, two or more bluetooth®device exist in the vehicle.	• With the voice operation, select the device to be connected. • Select the device to be connected on the multivision display. <Vehicles with MMCS>
Power supply abnormality in the hands free ECU, or communication error between the radio and CD player or multivition display, and hands free ECU.	Turn the ignition switch to the "ON" position and check if iPod connected to the USB adapter or USB device can be played. If the music cannot be played, the power supply of hands free ECU or the communication between the radio and CD player or multivition display, and hands free ECU may have a problem. Perform the Inspection procedure 2: The USB adapter data cannot be replayed. (Refer to <Vehicles with radio and CD player> or <Vehicles with MMCS>.) If the diagnosis mode of hands free ECU can be made an entry, the ECU status can be checked by the hands free ECU self-check, however, if the power supply of hands free ECU, or the communication with the radio and CD player or multivition display may have a problem, the ECU status can not be checked.(Refer to <Vehicles with radio and CD player> or <Vehicles with MMCS>.)

www.cargeek.ir

www.CarGeek.ir

Calling cannot be made using the hands free cellular phone function.
Bluetooth®The music player cannot be replayed.
The music data received from the USB adapter cannot be replayed.

Cause	SOLUTION
The Bluetooth® connection is not made between the hands free ECU and Bluetooth®device.	Connect the Bluetooth®device to the hands free ECU via Bluetooth®.
The vehicle is not located in the communication area of the cellular phone.	Check the radio wave condition of the mobile phone shown on the display, or check the radio wave condition shown on the mobile phone itself.
AUDIO communication error between the hands free ECU and the radio and CD player or multivition display.	Check if the data of music file sent to the hands free ECU can be replayed. If there are no problems, the communication between the hands free ECU and the radio and CD player may have a problem.

The voice recognition operation cannot be performed.
The communication voice cannot be heard by the other party.

Cause	SOLUTION
During the conversation, the microphone unit is set to mute.	During the conversation, press the speech switch and set to mute off by voice recognition. Perform Inspection Procedure 3: When the speech switch is pressed, the voice information is output, but the voice recognition is not performed. (Refer to .)
The hands free ECU cannot recognize the speech voice because of noise or others.	Minimize the noise by turning off the A/C, closing the window, and stopping the engine, and then clearly speak up near the microphone unit . Or, customize the voice recognition using the speaker enrolment function.
The microphone unit , or the connection has a problem.	The microphone unit may have a problem. Perform Inspection Procedure 3: When the speech switch is pressed, the voice information is output, but the voice recognition is not performed. (Refer to .) The connection with the microphone unit can be checked by the microphone check result on the diagnosis mode. (Refer to <Vehicles with radio and CD player> or <Vehicles with MMCS>.)
The speech switch, or the connection has a problem.	If the voice information is not output when the speech switch is operated, the steering wheel voice control switch has a problem. Perform the Inspection Procedure 4: When the speech switch is pressed, the voice information is not output. (Refer to <Vehicles with radio and CD player> or <Vehicles with MMCS>.)

A call cannot be received when the pick-up switch (Steering wheel voice control switch) is pressed.
The voice information cannot be output from the speaker.

Cause	SOLUTION
The Bluetooth® connection is not made between the hands free ECU and cellular phone.	Connect the cellular phone to the hands free ECU via Bluetooth®.
The pick-up switch (Steering wheel voice control switch), or the connection has a problem.	If the voice information is not output when the speech switch is operated, the steering wheel voice control switch has a problem. Perform the Inspection Procedure 4: When the speech switch is pressed, the voice information is not output. (Refer to <Vehicles with radio and CD player> or <Vehicles with MMCS>.)

www.cargeek.ir

www.CarGeek.ir

Voice guide "Unable to obtain vehicle speed. Please try again or contact your dealer for service" is sent from the speaker.

Cause	SOLUTION
The hands free-ECU cannot receive the vehicle speed signal from the radio and CD player or multivision display.	If the vehicle speed signal the hands free-ECU receives has a problem, the vehicle speed signal of audio unit or the hands free-ECU may have a problem. Perform the Inspection Procedure 8: Voice guide "Unable to obtain vehicle speed. Please try again or contact your dealer for service" is sent from the speaker. (Refer to <Vehicles with radio and CD player> or <Vehicles with MMCS>.)

STANDARD FLOW OF DIAGNOSTIC TROUBLESHOOTING

M1540203800408

Refer to GROUP 00 – Contents of troubleshooting .

DIAGNOSIS MODE <VEHICLES WITH RADIO AND CD PLAYER>

M1544404800128

Enter the diagnosis mode according to the following steps:

1. Turn the Ignition switch to the "ACC" or "ON" position and switch off the radio and CD player.

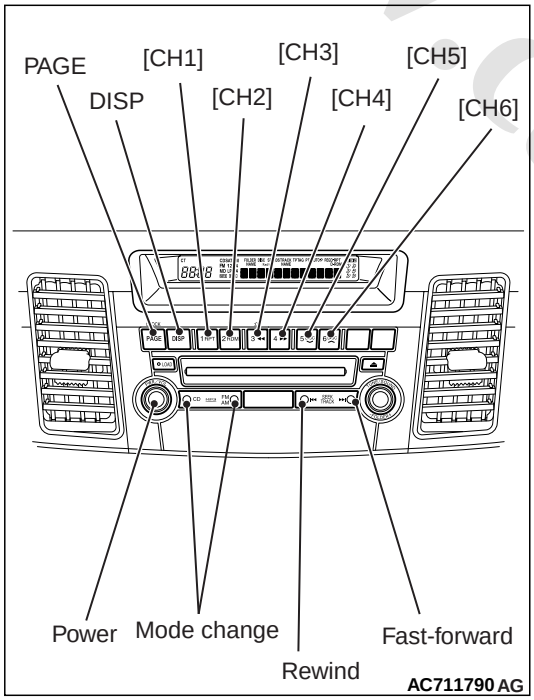

2. Press the following buttons in that order within sixty seconds from step (1).
   (1) [CH1] button.
   (2) Rewind button.
   (3) Fast-forward button.
   (4) [CH4] button.

NOTE:

- *When the "Power" button of the radio and CD player is pressed during the diagnosis mode, the diagnosis mode will be cancelled, thus switching off the radio and CD player. However, if the "Power" button is pressed while the hands free ECU is being updated, the update will not be cancelled.*
- *When the "Mode change" button (FM/AM, CD) is pressed during diagnosis mode except the hands free ECU update, the diagnosis mode will be cancelled and relevant operation will be carried out.*
- *When an invalid button is pressed during diagnosis mode except the hands free ECU update, the diagnosis mode will be cancelled, thus switching off the radio and CD player.*
- *During the diagnosis mode, voice which is input through the microphone unit is played through a relevant loudspeaker.*

3. "HFM DIAG" is displayed.

www.cargeek.ir

www.CarGeek.ir

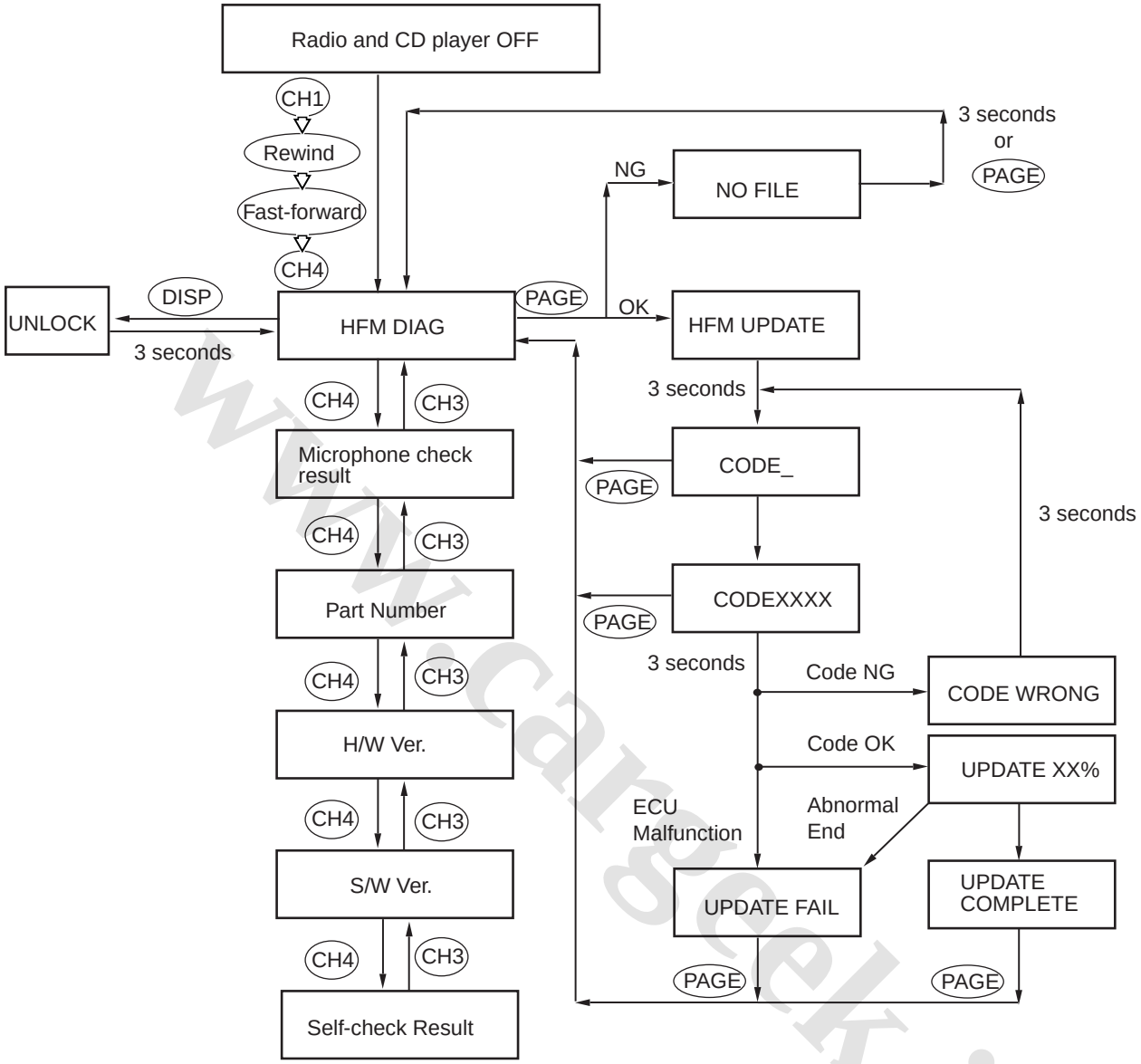

Description in the illustrations	Actual display	Condition
UNLOCK	UNLOCK	Four-digit password, which has been set by the security function, will be erased.
HFM DIAG	HFM DIAG	Displayed when the diagnosis mode is being entered.
Result of microphone check	MIC Short	Displayed when the line between the microphone and the hands free ECU is short-circuited.
	MIC Open	Displayed when the line between the microphone and the hands free ECU is open-circuited.
	MIC OK	Normal status (the line between the microphone and the hands free ECU is not open/short-circuited)
Part number	PN XXXXXXXX	Eight-digit part number is displayed.
H/W Ver.	H/W XX	Two-digit hardware version is displayed.

www.cargeek.ir

www.CarGeek.ir

Description in the illustrations	Actual display	Condition
S/W Ver.	S/W XXXXXXX	Seven-digit software version is displayed.
Self-check result	HFM OK	Displayed when the hands free ECU is not defective.
	HFM Error	Displayed when the hands free ECU is suspected to be defective. *NOTE: Turn the ignition switch to the "OFF" position once when "ERROR" is displayed. Enter the diagnosis mode by turning the ignition switch to the "ON" position again. If the self-check result shows "ERROR" again, the hands free ECU is determined to be defective.*
NO FILE	NO file	A USB device stores no data.
HFM UPDATE	HFM Update	Displayed when the hands free ECU update file is found, at the transition to the hands free ECU update mode, in the USB memory that is connected to the USB adapter.
CODE_	CODE_	Input four-digit code for update. Use the "CH" button when a code is input.
CODE XXXX	Code XXXX	XXXX after Code shows the numbers from 1 to 6, corresponding to the buttons "CH1" to "CH6".
CODE WRONG	Code wrong	The code, which has been input, is wrong.
UPDATING XX%	Updating XX%	Displayed when updating is carried out.
UPDATING COMPLETE	Update complete	The updating mode is complete.
UPDATE FAIL	Update fail	Displayed when the update of the hands free ECU fails.

DIAGNOSIS MODE <VEHICLES WITH MMCS>

M1544404800117

As a diagnosis mode for the hands free ECU, version information of the hands free ECU and diagnostic results of the hands free ECU and the microphone unit can be displayed by the service mode of the multivision display.

HOW TO INITIATE THE SERVICE MODE

Refer to MMCS - Service mode .

HOW TO TERMINATE THE SERVICE MODE

Refer to MMCS - Service mode .

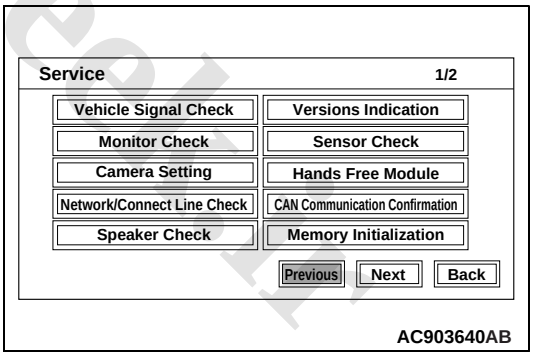

HANDS FREE MODULE

NOTE:

- *While the hands free ECU is in diagnosis mode, connection with the Bluetooth® device is shut down.*
- *While the hands free ECU is in diagnosis mode, the sound input to the microphone unit is output directly through the speaker.*

1. Select "hands free module" on "Service" screen.

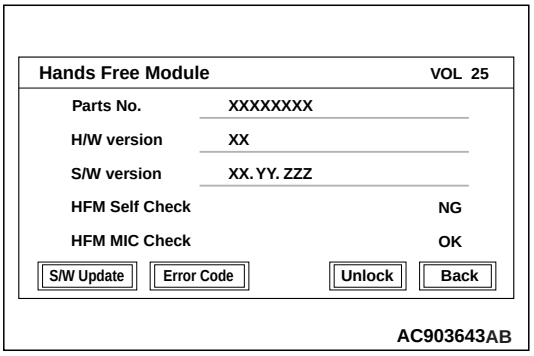

www.cargeek.ir

www.CarGeek.ir

2. "Hands Free Module" screen is displayed.

SPECIFICATION OF DISPLAY ITEM

Displayed name	Detail
VOL	The volume of the sound input to the microphone unit and output through the speaker while the hands free ECU is in diagnosis mode. (The sound volume can be changed by operating the multivision display.)
Parts No	The part number of the hands free ECU is displayed in 8 digits.
H/W version	The hardware version information of the hands free ECU is displayed in 2 digits.
S/W version	The software version information of the hands free ECU is displayed in 7 digits.
HFM Self Check	The hands free ECU state is displayed. • "OK": Normal (There is no abnormality in the hands free ECU.) • "NG": Abnormal (The hands free ECU may have a problem.) *NOTE: If "NG" is displayed, turn the ignition switch to the "OFF" position once. Then, turn the ignition switch to the "ON" position, and enter into the diagnosis mode. When the HFM Self Check display is NG again, the hands free ECU is determined to be defective.*
HFM MIC Check	Displays the communication condition of the hands free ECU and the microphone unit. • "OK": Normal (There is no short circuit or open circuit in the line between the microphone unit and the hands free ECU.) • "NG (Short)": This message is displayed when the line between the microphone unit and the hands free ECU is shorted. • "NG (Open)": (This message is displayed when there is an open circuit in the line between the microphone unit and the hands free ECU.)

DISPLAY BUTTON AND FUNCTION

Display button	Detail
S/W Update	Execution button for software update of the hands free ECU (Displayed only when the update is possible.)
Error Code	Error Code screen is displayed. (This button is displayed in grey when "HFM Self Check" is "OK.")
Unlock	Forcibly unlocks the 4-digit passcode that was set by the security function. (When the ECU is not locked by passcode, the "Unlock" button is displayed in grey.)
Back	Returns to "Service" screen.

SOFTWARE UPDATE (S/W UPDATE)

The software of the hands free ECU can be updated.

NOTE:
- *"S/W Update" is displayed when an USB that contains files to update the hands free ECU is connected.*
- *When the software update cannot continue because of improper removal of the USB during the update or of an incorrect update code, the display returns to the "Hands Free Module" screen. At this time, warning is not displayed.*

www.cargeek.ir

www.CarGeek.ir

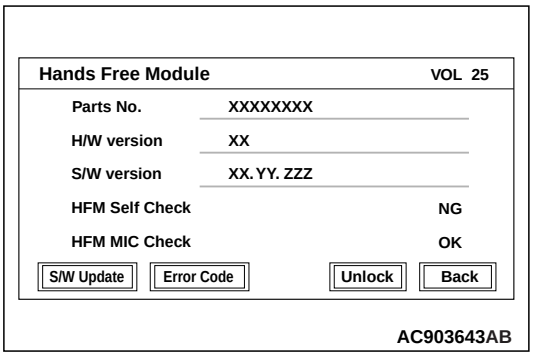

1. Press "S/W Update."

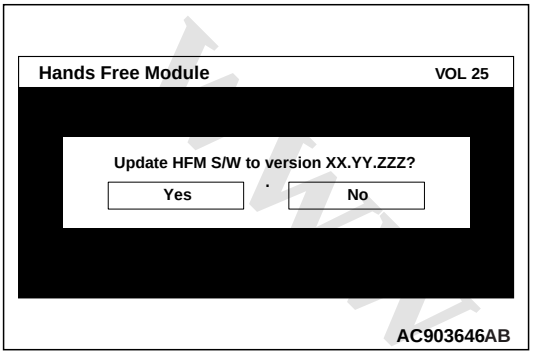

2. Select "Yes." (When "No" is selected, the display returns to the "Hands Free Module" screen.)

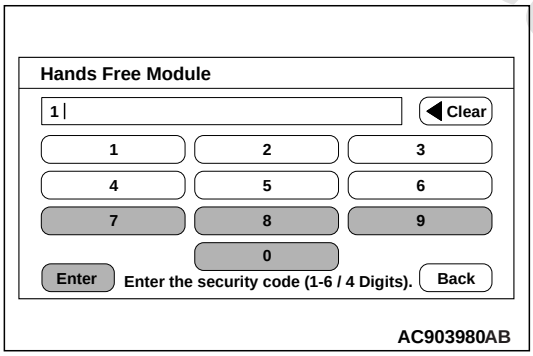

3. Input the 4-digit code for update. ("Enter" is displayed in grey until the 4-digit code is input.)

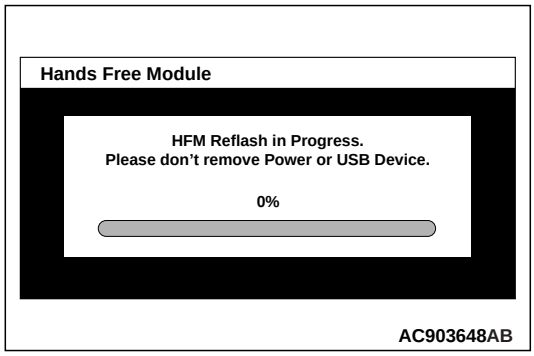

4. Update starts if the 4-digit code is normal.

NOTE:

- *When the input code is normal, the speaker will not output the sound input to the microphone unit until the display returns to the "Hands Free Module" screen.*

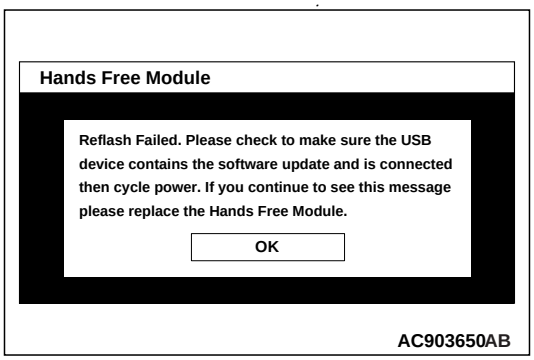

When the data rewriting operation is failed, the error screen is displayed.

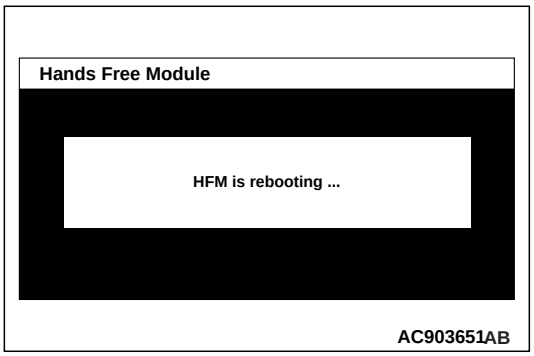

5. The "Reboot" screen is displayed when the update is completed successfully.

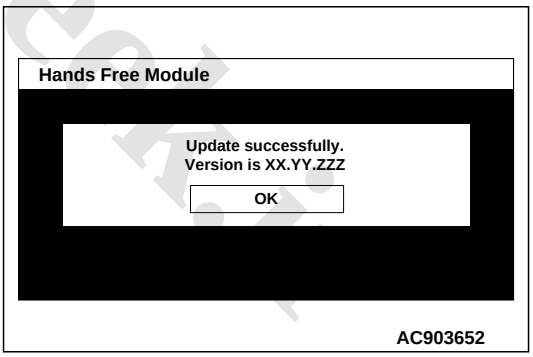

6. After the hands free ECU is rebooted, the "Update successfully." screen is displayed. When "OK" is selected, the display returns to the "Hands Free Module" screen.

ERROR CODE

The error code is displayed to show the internal state of the ECU.

NOTE: This code shows the internal state of the hands free ECU. Do not determine that the ECU is defective even when an error code is displayed. Be sure to diagnose the ECU before replacing it.

www.cargeek.ir

www.CarGeek.ir

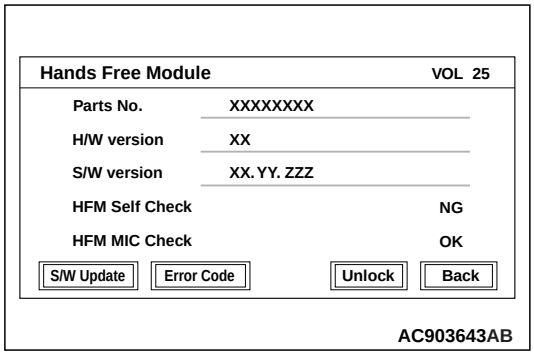

1. Press "Error Code."

   NOTE: "Error Code" is displayed when the "HFM Self Check" is "NG."

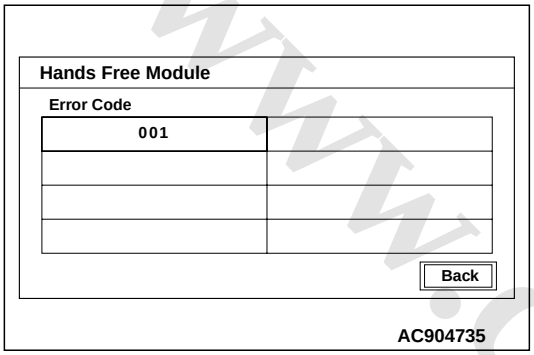

2. When "Back" is selected, the display returns to the "Hands Free Module" screen.

UNLOCK

Forcibly unlocks the 4-digit passcode that was set by the security function.

NOTE: When the ECU is not locked by passcode, the "Unlock" button is displayed in grey.

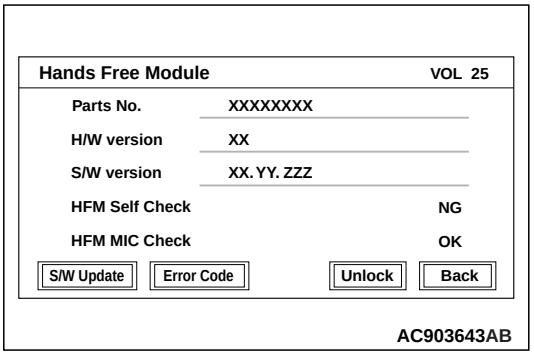

1. Press "Unlock."

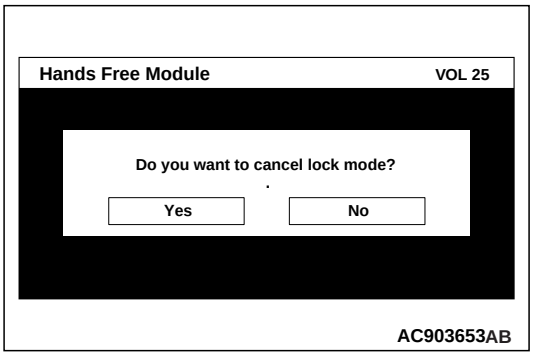

2. When "Yes" is selected, "Lock mode canceled" will be displayed and the passcode lock will be unlocked.

   NOTE: When "No" is selected, the display returns to the "Hands Free Module" screen.

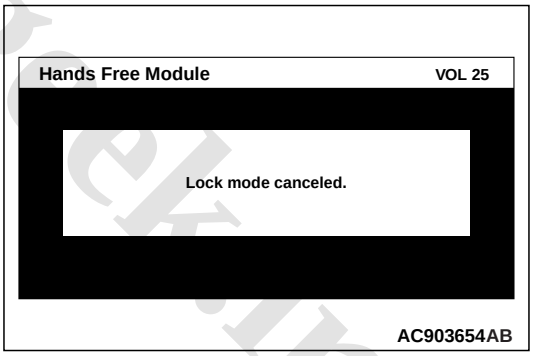

3. The display returns to the "Hands Free Module" screen after 4 seconds.

TROUBLE SYMPTOM CHART

M1546001801391

NOTE: Some Bluetooth® devices may not be compatible with the hands free ECU

www.cargeek.ir

www.CarGeek.ir

Inspection Procedure No.	Trouble symptom		Reference page
1	Check the hands free ECU power supply circuit.	<Vehicles with radio and CD player>	
		<Vehicles with MMCS>	
2	The USB adapter data cannot be replayed.	<Vehicles with radio and CD player>	
		<Vehicles with MMCS>	
3	When the speech switch is pressed, the voice information is output, but the voice recognition is not performed.		
4	When the speech switch is pressed, the voice information is not output.	<Vehicles with radio and CD player>	
		<Vehicles with MMCS>	
5	DIAGNOSIS MODE cannot be made an entry.	<Vehicles with radio and CD player>	
6	DIAGNOSIS MODE cannot be made an entry. Mobile Phone item is not displayed on the INFOR screen of MMCS.	<Vehicles with MMCS>	
7	Steering wheel voice control switch illumination does not come on.		
8	Voice guide "Unable to obtain vehicle speed. Please try again or contact your dealer for service" is sent from the speaker.	<Vehicles with radio and CD player>	
		<Vehicles with MMCS>	

NOTE: If the radio and CD player or multivision display is reset or sound jump occurs at the auto start by Auto Stop & Go (AS&G) System, refer to .<Vehicles with Auto Stop & Go (AS&G) System>

SYMPTOM PROCEDURES

Inspection Procedure 1: Check the hands free ECU power supply circuit. <Vehicles with radio and CD player>

⚠ CAUTION
Before replacing the ECU, ensure that the power supply circuit, the earth circuit and the communication circuit are normal.

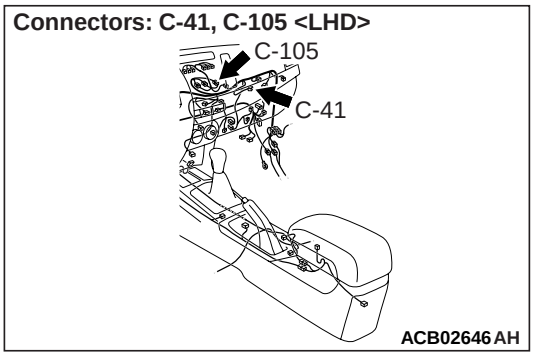

www.cargeek.ir

www.CarGeek.ir

Connector: C-41 <RHD>

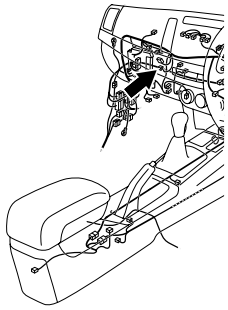

ACB02648AI

Connector: C-105 <RHD>

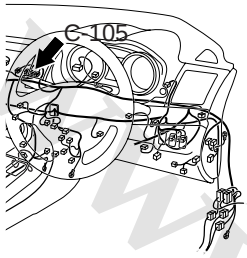

ACB02647AP

CIRCUIT OPERATION

- The ACC signal is received C-41 hands free ECU connector terminal No.15 from C-105 radio and CD player connector terminal No.17.
- From the fusible link to C-128 intermediate connector, the hands free ECU uses the same power supply circuit as that of AUDIO display (centre panel unit) as well as that of radio and CD player. Therefore, check first if the AUDIO display (centre panel unit) is displayed. If the AUDIO display (centre panel unit) is not displayed, carry out in advance the troubleshooting of "The radio and CD player does not operate normally by operating the audio control unit of the centre panel unit". (Refer to <Vehicles without Auto Stop & Go (AS&G) System> or <Vehicles with Auto Stop & Go (AS&G) System>.)

PROBABLE CAUSES

- Damaged harness wires and connectors
- The DC/DC converter may be defective.<Vehicles with Auto Stop & Go (AS&G) System>
- Malfunction of the hands free ECU
- Malfunction of the radio and CD player
- Damaged harness wires and connectors

DIAGNOSIS PROCEDURE

STEP 1. Check the radio and CD player operation.

Check if the radio and CD player work normally and the sound is output.

Q: Is the check result normal?
YES : Go to Step 2.
NO : Troubleshoot the radio and CD player (Refer to).

STEP 2. Connector check: C-41 hands free ECU connector

Q: Is the check result normal?
YES : Go to Step 3.
NO : Repair the defective connector.

STEP 3. Resistance measurement at C-41 hands free ECU connector.

(1) Disconnect the connector, and measure at the wiring harness side.
(2) Check the continuity between terminal 17 and earth.

OK: Continuity exists (2 Ω or less)

Q: Is the check result normal?
YES : Go to Step 5.
NO : Go to Step 4.

STEP 4. Check the wiring harness between C-41 hands free ECU connector terminal No.17 and body earth.

- Check the body earth wires for open circuit.

Q: Is the check result normal?
YES : The trouble can be an intermittent malfunction (Refer to GROUP 00 – How to use Troubleshooting/inspection Service Points – How to Cope with Intermittent Malfunction).
NO : Repair the wiring harness.

STEP 5. Voltage measurement at C-41 hands free ECU connector.

(1) Disconnect C-41 hands free ECU connector, and measure at the wiring harness side.
(2) Measure the voltage between terminal No.1 and body earth.

OK: System voltage

Q: Is the check result normal?
YES : Go to Step 8.
NO : Go to Step 6.

www.cargeek.ir

www.CarGeek.ir

STEP 6. Connector check: C-128 intermediate connector

Q: Is the check result normal?
YES : Go to Step 7.
NO : Repair the defective connector.

STEP 7. Check the wiring harness between C-41 hands free connector terminal No.1 and C-128 intermediate connector terminal No.9.

- Check the power supply line for open circuit and short circuit.

Q: Is the check result normal?
YES : The trouble can be an intermittent malfunction (Refer to GROUP 00, How to use Troubleshooting/inspection Service Points, How to Cope with Intermittent Malfunction).
NO : Repair the wiring harness.

STEP 8. Voltage measurement at C-41 hands free ECU connector.

(1) Disconnect C-41 hands free ECU connector, and measure at the wiring harness side.
(2) Turn the ignition switch to "ACC" position.
(3) Measure the voltage between terminal No.15 and body earth.

OK: 1V or less

Q: Is the check result normal?
YES : Replace the hands free ECU.
NO : Go to Step 9.

STEP 9. Connector check: C-105 radio and CD player connector

Q: Is the check result normal?
YES : Go to Step 10.
NO : Repair the defective connector.

STEP 10. Check the harness wire between C-105 radio and CD player connector terminal No.17 and C-41 hands free ECU connector terminal No.15.

- Check the signal line for open circuit and short circuit.

Q: Is the check result normal?
YES : Replace the radio and CD player.
NO : Repair the wiring harness.

Inspection Procedure 1: Check the hands free ECU power supply circuit. <Vehicles with MMCS>

⚠ CAUTION
Before replacing the ECU, ensure that the power supply circuit, the earth circuit and the communication circuit are normal.

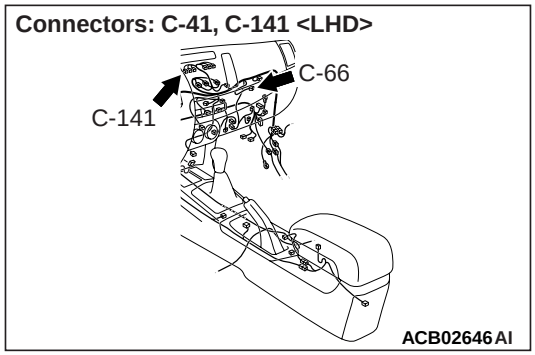

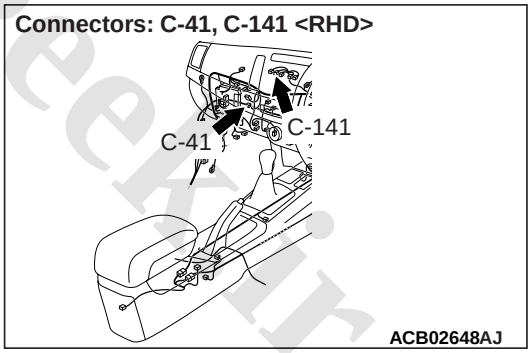

CIRCUIT OPERATION

- The ACC signal is received C-41 hands free ECU connector terminal No.15 from C-141 multivision display connector terminal No.82.
- From the fusible link to C-128 intermediate connector, the hands free ECU uses the same power supply circuit as that of multivision display. Therefore, check first if the multivision display operates normally. If the multivision display does not operate normally, carry out in advance the troubleshooting of "No navigation screen is displayed". (Refer to <Vehicles without Auto Stop & Go (AS&G) System> or <Vehicles with Auto Stop & Go (AS&G) System>.)

www.cargeek.ir

www.CarGeek.ir

PROBABLE CAUSES

- The DC/DC converter may be defective.<Vehicles with Auto Stop & Go (AS&G) System>
- Damaged harness wires and connectors
- Malfunction of the hands free ECU
- Malfunction of the multivision display
- Damaged harness wires and connectors

DIAGNOSIS PROCEDURE

STEP 1. Check the multivision display operation.

Check if the multivision display work normally and the sound is output.

Q: Is the check result normal?
YES : Go to Step 2.
NO : Troubleshoot the multivision display (Refer to).

STEP 2. Connector check: C-41 hands free ECU connector

Q: Is the check result normal?
YES : Go to Step 3.
NO : Repair the defective connector.

STEP 3. Resistance measurement at C-41 hands free ECU connector.

(1) Disconnect the connector, and measure at the wiring harness side.
(2) Check the continuity between terminal 17 and earth.

OK: Continuity exists (2 Ω or less)

Q: Is the check result normal?
YES : Go to Step 5.
NO : Go to Step 4.

STEP 4. Check the wiring harness between C-41 hands free ECU connector terminal No.17 and body earth.

- Check the body earth wires for open circuit.

Q: Is the check result normal?
YES : The trouble can be an intermittent malfunction (Refer to GROUP 00 – How to use Troubleshooting/inspection Service Points – How to Cope with Intermittent Malfunction).
NO : Repair the wiring harness.

STEP 5. Voltage measurement at C-41 hands free ECU connector.

(1) Disconnect C-41 hands free ECU connector, and measure at the wiring harness side.
(2) Measure the voltage between terminal No.1 and body earth.

OK: System voltage

Q: Is the check result normal?
YES : Go to Step 8.
NO : Go to Step 6.

STEP 6. Connector check: C-128 intermediate connector

Q: Is the check result normal?
YES : Go to Step 7.
NO : Repair the defective connector.

STEP 7. Check the wiring harness between C-41 hands free connector terminal No.1 and C-128 intermediate connector terminal No.9.

- Check the power supply line for open circuit and short circuit.

Q: Is the check result normal?
YES : The trouble can be an intermittent malfunction (Refer to GROUP 00, How to use Troubleshooting/inspection Service Points, How to Cope with Intermittent Malfunction).
NO : Repair the wiring harness.

STEP 8. Voltage measurement at C-41 hands free ECU connector.

(1) Disconnect C-41 hands free ECU connector, and measure at the wiring harness side.
(2) Turn the ignition switch to "ACC" position.
(3) Measure the voltage between terminal No.15 and body earth.

OK: 1V or less

Q: Is the check result normal?
YES : Replace the hands free ECU.
NO : Go to Step 9.

STEP 9. Connector check: C-141 multivision display connector

Q: Is the check result normal?
YES : Go to Step 10.
NO : Repair the defective connector.

www.cargeek.ir

www.CarGeek.ir

STEP 10. Check the harness wire between C-141 multivision display connector terminal No.82 and C-41 hands free ECU connector terminal No.15.

- Check the signal line for open circuit and short circuit.

NOTE: Prior to the wiring harness inspection, check the intermediate connector C-140, and repair if necessary.

Q: Is the check result normal?
YES : Replace the radio and CD player.
NO : Repair the wiring harness.

Inspection Procedure 2: The USB adapter data cannot be replayed. <Vehicles with radio and CD player>

⚠ CAUTION
Before replacing the hands free ECU, ensure that the power supply circuit, the earth circuit and the communication circuit are normal.

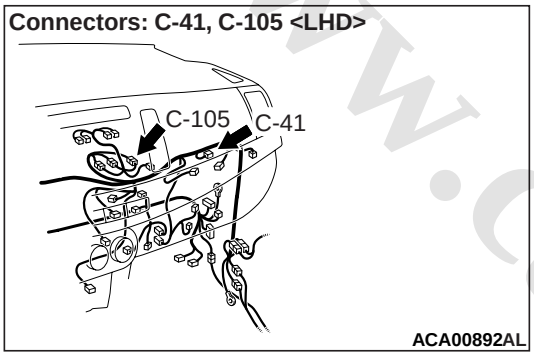

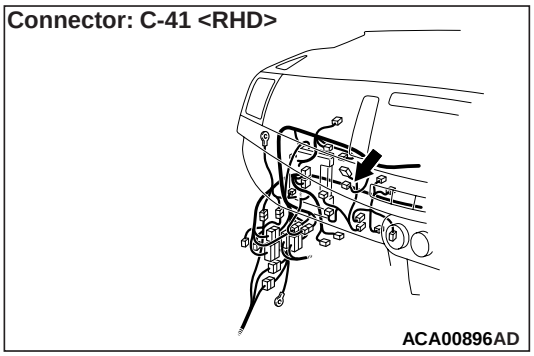

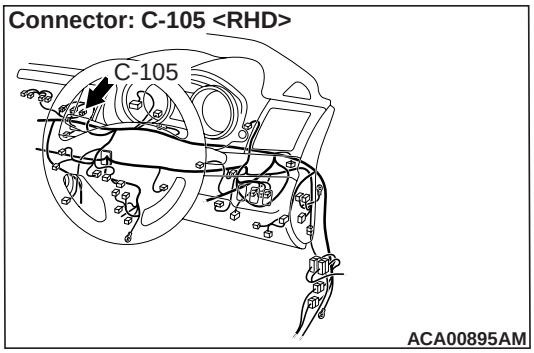

COMMENTS ON TROUBLE SYMPTOM
If the sound replay is impossible with the USB mode, the USB adapter, USB cable, hands free ECU, or radio and CD player may be defective, or a communication error between the radio and CD player and hands free ECU may have occurred.

NOTE: Before troubleshooting, check that the music file (the customer tried to replay) can be replayed.

PROBABLE CAUSES
- The radio and CD player may be defective.
- The hands free ECU may be defective.
- The USB adapter may be defective.
- The USB cable may be defective.
- Damaged harness wires and connectors

DIAGNOSIS PROCEDURE

STEP 1. Check the radio and CD player operation.
Check if the radio and CD player normally and the sound is output.

Q: Is the check result normal?
YES : Go to Step 2.
NO : Troubleshoot the radio and CD player. (Refer to .)

STEP 2. Check the diagnosis mode
Check if the hands free-ECU can be switched to the diagnosis mode.(Refer to .)

Q: Is the check result normal?
YES : Go to Step 3.
NO : Perform Inspection Procedure 5 "DIAGNOSIS MODE cannot be made an entry."(Refer to .)

www.cargeek.ir

www.CarGeek.ir

STEP 3. Check the USB adapter.
Check that the continuity exists between the front side terminals of USB adapter and rear side terminals of USB adapter. (Refer to)

Q: Is the check result normal?
YES : Go to Step 4.
NO : Replace the USB adapter.

STEP 4. Check the USB cable.
Check that the USB cable is connected to the USB adapter or hands free ECU normally. Or check the USB cable for damage such as bend.

Q: Is the check result normal?
YES : Go to Step 5.
NO : Replace or repair the USB cable.

STEP 5. Connector check: C-41 hands free ECU connector, C-105 radio and CD player connector

Q: Is the check result normal?
YES : Go to Step 6.
NO : Repair the defective connector.

STEP 6. Check the wiring harness between C-41 hands free ECU connector terminal No.22, 8 and C-105 radio and CD player connector terminal No. 3, 12.
- Check the signal lines for open circuit and short circuit.

Q: Is the check result normal?
YES : Go to Step 7.
NO : Repair the wiring harness.

STEP 7. Replace the hands free ECU temporarily, and check the trouble symptom.
Replace the hands free ECU temporarily, and check that the sound is output from the speaker.

Q: Is the check result normal?
YES : Replace the hands free ECU.
NO : Replace the radio and CD player.

Inspection Procedure 2: The USB adapter data cannot be replayed. <Vehicles with MMCS>

⚠ CAUTION
Before replacing the hands free ECU, ensure that the power supply circuit, the earth circuit and the communication circuit are normal.

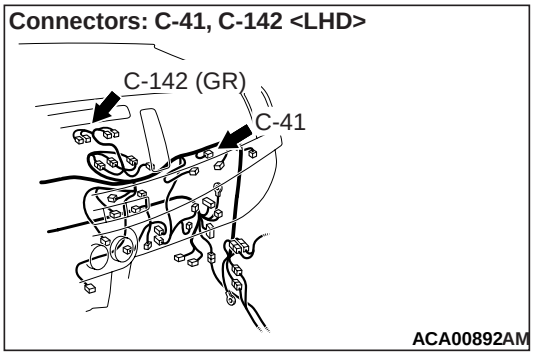

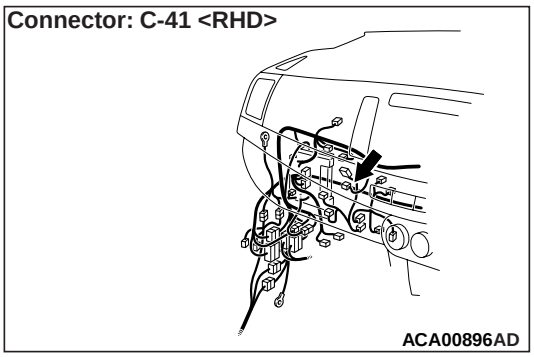

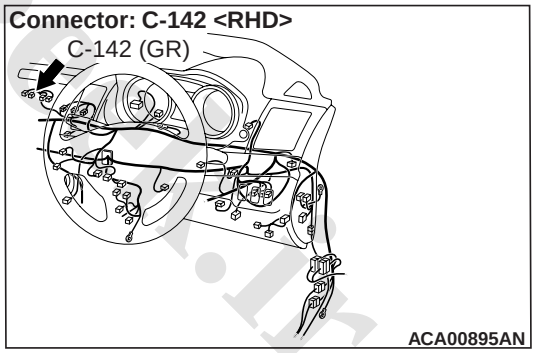

COMMENTS ON TROUBLE SYMPTOM
If the sound replay is impossible with the USB/i Pod mode, the USB adapter, USB cable, hands free ECU, or multivision display may be defective, or a communication error between the multivision display and hands free ECU may have occurred.

NOTE: Before troubleshooting, check that the music file (the customer tried to replay) can be replayed.

PROBABLE CAUSES
- The multivision display may be defective.
- The hands free ECU may be defective.
- The USB adapter may be defective.
- The USB cable may be defective.

www.cargeek.ir

www.CarGeek.ir

- Damaged harness wires and connectors

DIAGNOSIS PROCEDURE

STEP 1. Check the multivision display operation.
Check if the multivision display work normally and the sound is output.

Q: Is the check result normal?
YES : Go to Step 2.
NO : Troubleshoot the MMCS (Refer to .).

STEP 2. Check the multivision display operation.
Display the INFOR screen, and check that the "Mobile Phone" item is displayed.

Q: Is the check result normal?
YES : Go to Step 3.
NO : Perform Inspection Procedure 6: "DIAGNOSIS MODE cannot be made an entry. Mobile Phone item is not displayed on the INFOR screen of MMCS." (Refer to .)

STEP 3. Check the USB adapter.
Check that the continuity exists between the front side terminals of USB adapter and rear side terminals of USB adapter. (Refer to)

Q: Is the check result normal?
YES : Go to Step 4.
NO : Replace the USB adapter.

STEP 4. Check the USB cable.
Check that the USB cable is connected to the USB adapter or hands free ECU normally. Or check the USB cable for damage such as bend.

Q: Is the check result normal?
YES : Go to Step 5.
NO : Replace or repair the USB cable.

STEP 5. Connector check: C-41 hands free ECU connector, C-142 and multivision display connector

Q: Is the check result normal?
YES : Go to Step 6.
NO : Repair the defective connector.

STEP 6. Check the wiring harness between C-41 hands free ECU connector terminal No.22, 8 and C-142 multivision display connector terminal No. 45, 61.

- Check the signal lines for open circuit and short circuit.

NOTE: Prior to the wiring harness inspection, check intermediate connector C-140, and repair if necessary.

Q: Is the check result normal?
YES : Go to Step 7.
NO : Repair the wiring harness.

STEP 7. Replace the hands free ECU temporarily, and check the trouble symptom.
Replace the hands free ECU temporarily, and check that the sound is output from the speaker.

Q: Is the check result normal?
YES : Replace the hands free ECU.
NO : Replace the multivision display.

www.cargeek.ir

www.CarGeek.ir

Inspection Procedure 3: When the speech switch is pressed, the voice information is output, but the voice recognition is not performed.

⚠ CAUTION

Before replacing the hands free ECU, ensure that the power supply circuit, the earth circuit and the communication circuit are normal.

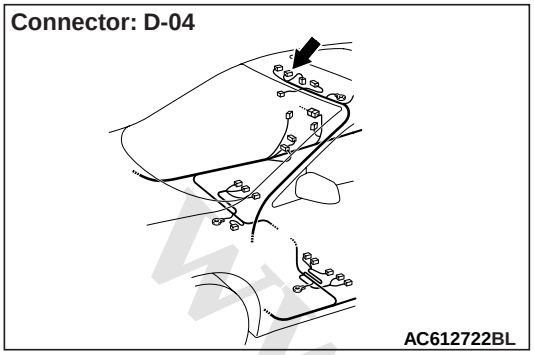

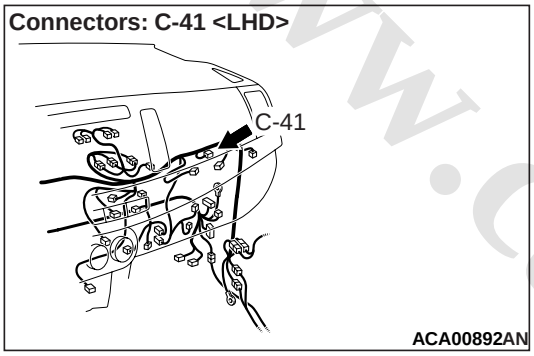

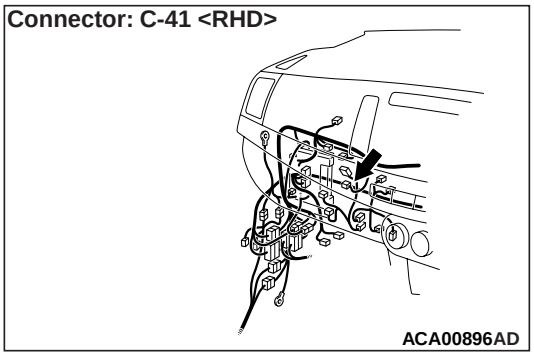

COMMENTS ON TROUBLE SYMPTOM

When the speech switch is pushed, if the voice information is sent but voice recognition is not executed, the microphone unit, hands free ECU or the communication between the microphone unit and hands free ECU may have a problem.

PROBABLE CAUSES

- The hands free ECU may be defective.
- The microphone unit may be defective.
- Damaged harness wires and connectors

DIAGNOSIS PROCEDURE

STEP 1. Check the diagnosis mode

Check if the microphone check result "MIC OK" is displayed on the diagnosis mode of hands free ECU.(Refer to <vehicles with radio and CD player> or <vehicles with MMCS>.)

Q: Is the check result normal?
YES : Go to Step 4.
NO : Go to Step 2.

STEP 2. Connector check: D-04 microphone unit connector, C-41 hands free ECU connector

Q: Is the check result normal?
YES : Go to Step 3.
NO : Repair the defective connector.

STEP 3. Check the wiring harness between C-41 hands free ECU connector terminal No.14, 28 and D-04 microphone unit connector terminal No.2, 1.

- Check the signal lines for open circuit and short circuit.

NOTE: Prior to the wiring harness inspection, check intermediate connectors C-130 and repair if necessary.

Q: Is the check result normal?
YES : Go to Step 4.
NO : Repair the wiring harness.

STEP 4. Replace the microphone unit temporarily, and check the trouble symptom.

Q: Is the check result normal?
YES : Replace the microphone unit.
NO : Go to Step 5.

STEP 5. Replace the hands free ECU temporarily, and check the trouble symptom.

Q: Is the check result normal?

www.cargeek.ir

www.CarGeek.ir

YES : Replace the hands free ECU.
NO : The trouble can be an intermittent malfunction (Refer to GROUP 00, How to use Troubleshooting/inspection Service Points, How to Cope with Intermittent Malfunction).

www.cargeek.ir

www.cargeek.ir

www.CarGeek.ir

Inspection Procedure 4: When the speech switch is pressed, the voice information is not output. <Vehicles with radio and CD player>

⚠ CAUTION

Before replacing the hands free ECU, ensure that the power supply circuit, the earth circuit and the communication circuit are normal.

Steering Wheel Voice Control Switch Circuit

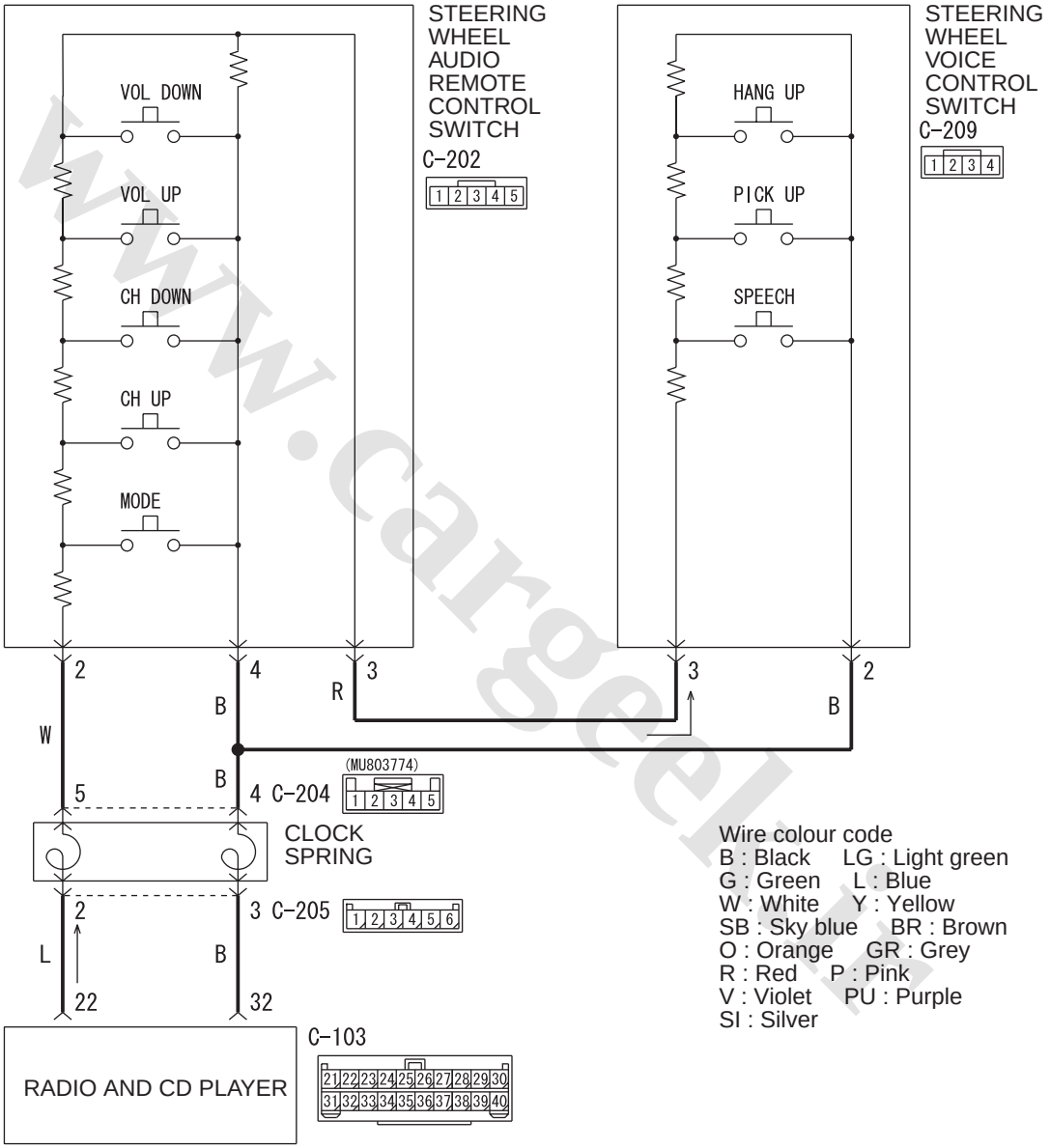

www.cargeek.ir

www.CarGeek.ir

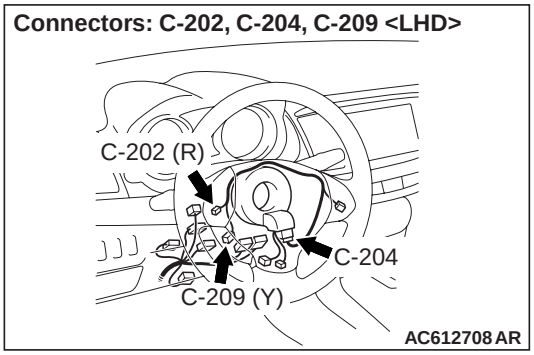

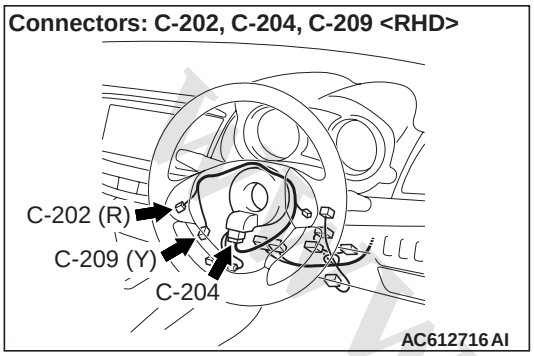

COMMENTS ON TROUBLE SYMPTOM

If the voice information is not sent when the speech switch is pushed, the communication between the radio and CD player, and the hands free ECU, or the communication between the radio and CD player, and the steering wheel voice control switch, the hands free ECU, or the steering wheel voice control switch may have a problem.

PROBABLE CAUSES

- The radio and CD player may be defective.
- The hands free ECU may be defective.
- The steering wheel audio remote control switch may be defective.
- The steering wheel voice control switch may be defective.
- Damaged harness wires and connectors

DIAGNOSIS PROCEDURE

STEP 1. Check the diagnosis mode

Check if the hands free ECU can be switched to the diagnosis mode.(Refer to .)

Q: Is the check result normal?

YES : Go to Step 2.

NO : Perform Inspection Procedure 5 "DIAGNOSIS MODE cannot be made an entry."(Refer to .)

STEP 2. Operation check of the steering wheel audio remote control switch

Check that the radio and CD player can be operated by the steering wheel audio remote control switch.

Q: Is the check result normal?

YES : Go to Step 3.

NO : Troubleshoot the steering wheel audio remote control switch.

STEP 3. Check the steering wheel voice control switch.

Check the continuity of the steering wheel voice control switch. (Refer to steering wheel voice control switch inspection.)

Q: Is the check result normal?

YES : Go to Step 4.

NO : Replace the steering wheel voice control switch.

STEP 4. Check the steering wheel audio remote control switch.

Check the continuity of the steering wheel audio remote control switch. (Refer to steering wheel audio remote control switch inspection.)

Q: Is the check result normal?

YES : Go to Step 5.

NO : Replace the steering wheel audio remote control switch.

STEP 5. Check the harness wire between C-202 steering wheel audio remote control switch connector terminal No. 3 and C-209 steering wheel voice control switch connector terminal No.3.

- Check the communication lines for open circuit and short circuit.

Q: Is the check result normal?

YES : Go to Step 6.

NO : Repair the wiring harness.

STEP 6. Connector check: C-304 clock spring connector.

Q: Is the check result normal?

YES : Go to Step 7.

NO : Repair the defective connector.

www.cargeek.ir

www.CarGeek.ir

STEP 7. Check the harness wire between C-204 clock spring connector terminal No. 4 and C-209 steering wheel voice control switch connector terminal No.2.

- Check the communication lines for open circuit and short circuit.

Q: Is the check result normal?

YES : Go to Step 8.
NO : Repair the wiring harness.

STEP 8. Temporarily replace the hands free ECU, and check the trouble symptom.

Q: Is the check result normal?

YES : Replace the hands free ECU.
NO : Replace the radio and CD player.

www.cargeek.ir

www.cargeek.ir

www.CarGeek.ir

Inspection Procedure 4: When the speech switch is pressed, the voice information is not output. <Vehicles with MMCS>

⚠ CAUTION

Before replacing the hands free module, ensure that the power supply circuit, the earth circuit and the communication circuit are normal.

Steering Wheel Voice Control Switch Circuit

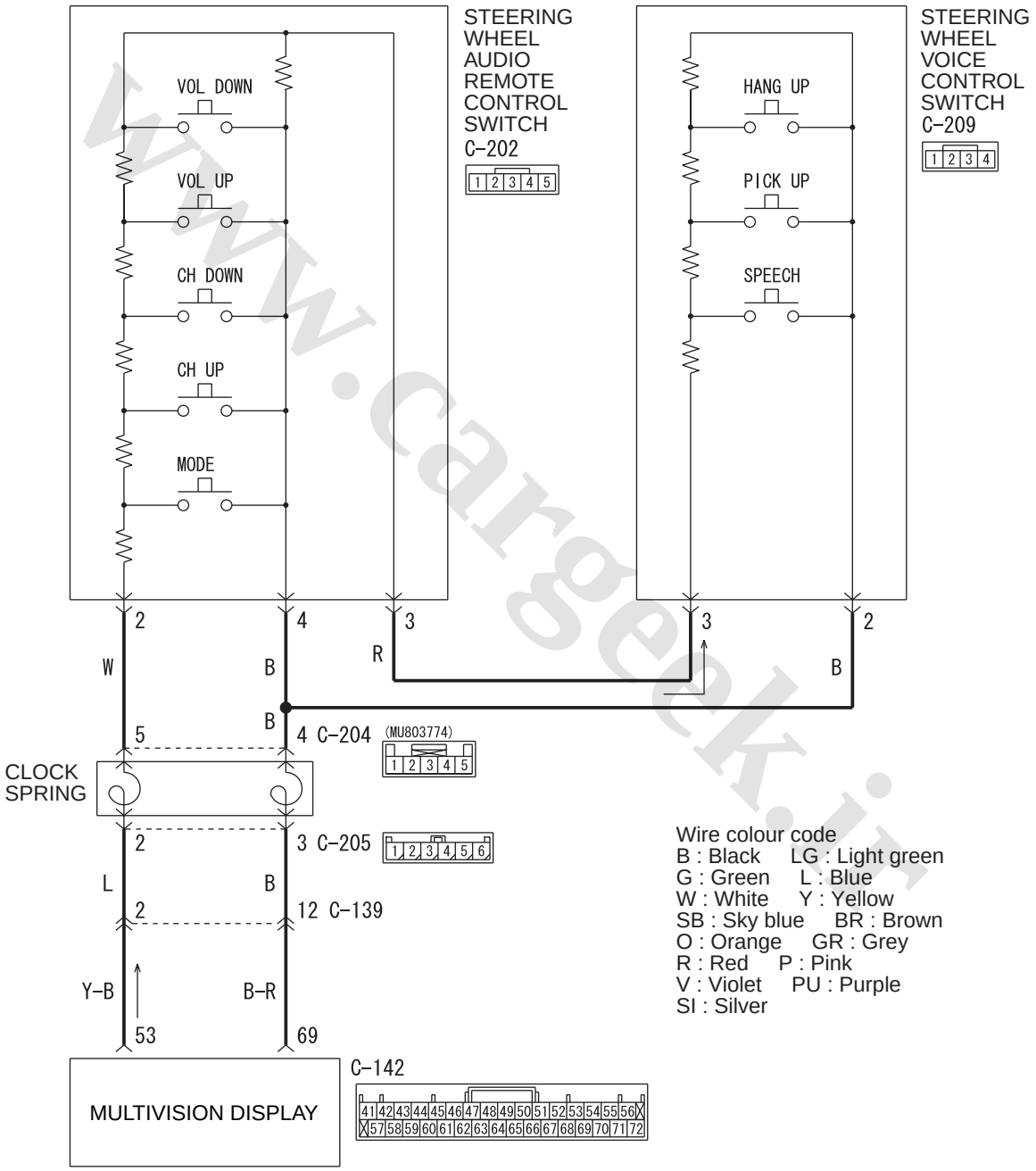

www.cargeek.ir

www.CarGeek.ir

Connectors: C-202, C-204, C-209 <LHD>

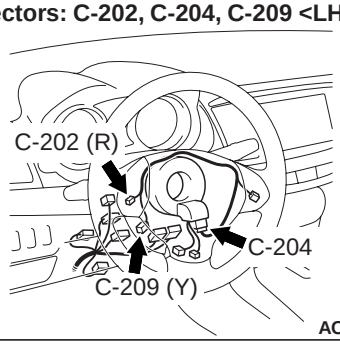

Connectors: C-202, C-204, C-209 <RHD>

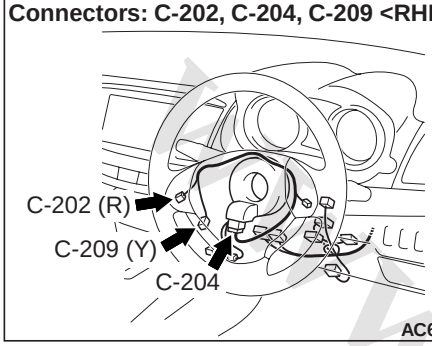

COMMENTS ON TROUBLE SYMPTOM

If the voice information is not sent when the speech switch is pushed, the communication between the multivision display, and the hands free module, or the communication between the multivision display, and the steering wheel voice control switch, the hands free module, or the steering wheel voice control switch may have a problem.

PROBABLE CAUSES

- The multivision display may be defective.
- The hands free ECU may be defective.
- The steering wheel audio remote control switch may be defective.
- The steering wheel voice control switch may be defective.
- Damaged harness wires and connectors

DIAGNOSIS PROCEDURE

STEP 1. Check the multivision display operation.

Display the INFOR screen, and check that the "Mobile Phone" item is displayed.

Q: Is the check result normal?

YES : Go to Step 2.

NO : Perform Inspection Procedure 6: "DIAGNOSIS MODE cannot be made an entry. Mobile Phone item is not displayed on the INFOR screen of MMCS." of the troubleshooting (Refer to).

STEP 2. Operation check of the steering wheel audio remote control switch

Check that the multivision display can be operated by the steering wheel audio remote control switch.

Q: Is the check result normal?

YES : Go to Step 3.

NO : Troubleshoot the steering wheel audio remote control switch. (Refer to .)

STEP 3. Check the steering wheel voice control switch.

Check the continuity of the steering wheel voice control switch. (Refer to steering wheel voice control switch inspection.)

Q: Is the check result normal?

YES : Go to Step 4.

NO : Replace the steering wheel voice control switch.

STEP 4. Check the steering wheel audio remote control switch.

Check the continuity of the steering wheel audio remote control switch. (Refer to steering wheel audio remote control switch inspection.)

Q: Is the check result normal?

YES : Go to Step 5.

NO : Replace the steering wheel audio remote control switch.

STEP 5. Check the harness wire between C-202 steering wheel audio remote control switch connector terminal No. 3 and C-209 steering wheel voice control switch connector terminal No.3

- Check the communication lines for open circuit and short circuit.

Q: Is the check result normal?

YES : Go to Step 6.

NO : Repair the wiring harness.

STEP 6. Connector check: C-204 clock spring connector.

Q: Is the check result normal?

YES : Go to Step 7.

NO : Repair the defective connector.

www.cargeek.ir

www.CarGeek.ir

STEP 7. Check the harness wire between C-204 clock spring connector terminal No. 4 and C-209 steering wheel voice control switch connector terminal No.2.

- Check the communication lines for open circuit and short circuit.

Q: Is the check result normal?

YES : Go to Step 8.
NO : Repair the wiring harness.

STEP 8. Temporarily replace the hands free ECU, and check the trouble symptom.

Q: Is the check result normal?
YES : Replace the hands free ECU.
NO : Replace the multivision display.

Inspection Procedure 5: DIAGNOSIS MODE cannot be made an entry. <Vehicles with radio and CD player>

⚠ CAUTION
Before replacing the hands free ECU, ensure that the power supply circuit, the earth circuit and the communication circuit are normal.

Hands Free ECU Communication Circuit

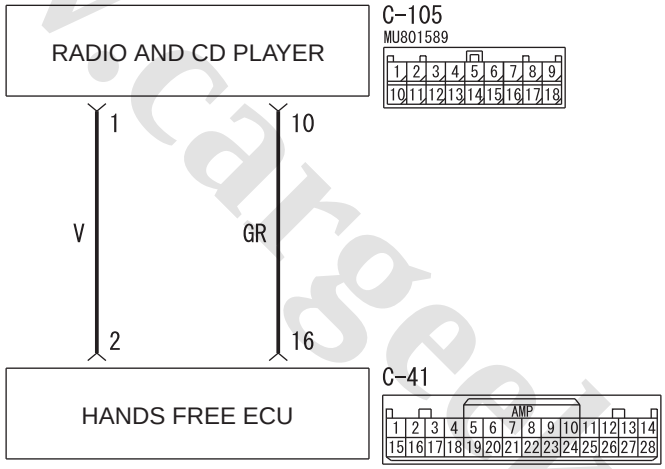

Wire colour code
B : Black LG : Light green G : Green L : Blue W : White Y : Yellow SB : Sky blue
BR : Brown O : Orange GR : Grey R : Red P : Pink V : Violet PU : Purple SI : Silver WBH54E039A

Connectors: C-41, C-105 <LHD>

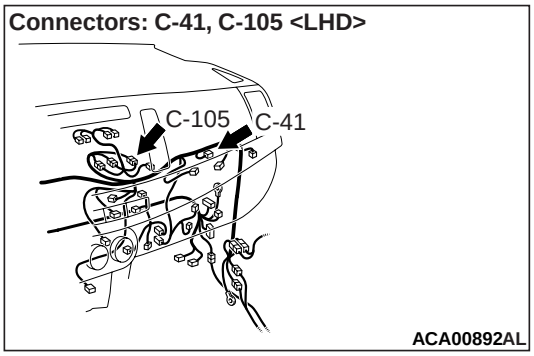

Connector: C-41 <RHD>

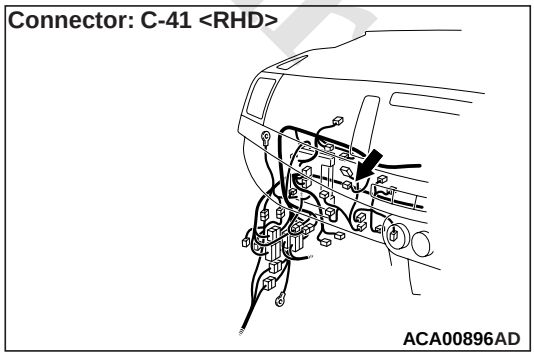

www.cargeek.ir

www.CarGeek.ir

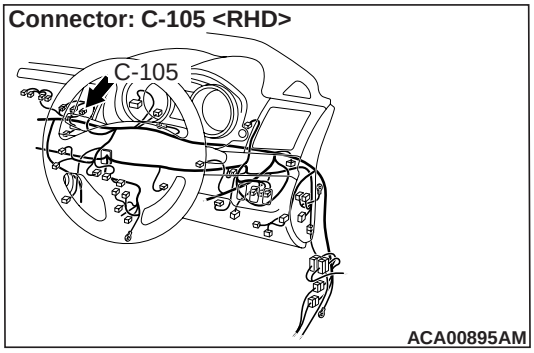

COMMENTS ON TROUBLE SYMPTOM

If the diagnosis mode cannot be made an entry, the hands free ECU, the communication between the hands free ECU, and the radio and CD player, or the power supply system of hands free ECU may have a problem.

PROBABLE CAUSES

- The hands free ECU may be defective.
- The radio and CD player may be defective.
- Damaged harness wires and connectors

DIAGNOSIS PROCEDURE

STEP 1. Check the radio and CD player operation.

Check if the radio and CD player work normally and the sound is output.

Q: Is the check result normal?

YES : Go to Step 2.
NO : Troubleshoot the radio and CD player. (Refer to .)

STEP 2. Connector check: C-41 hands free ECU connector, C-105 radio and CD player connector

Q: Is the check result normal?

YES : Go to Step 3.
NO : Repair the defective connector.

STEP 3. Check the wiring harness between C-41 hands free ECU connector terminal No.2, 16 and C-105 radio and CD player connector terminal No.1, 10.

- Check the signal lines for open circuit and short circuit.

Q: Is the check result normal?

YES : Go to Step 4.
NO : Repair the wiring harness.

STEP 4. Check if the power supply circuit of hands free ECU have a problem.

Perform the Inspection procedure 1 "Check the hands free-ECU power supply circuit." of the trouble-shooting. (Refer to)

Q: Is the check result normal?

YES : Go to Step 5.
NO : Repair according to the troubleshooting for reference.

STEP 5. Replace the hands free ECU temporarily, and check the trouble symptom.

Q: Is the check result normal?

YES : Replace the hands free ECU.
NO : Replace the radio and CD player.

www.cargeek.ir

www.CarGeek.ir

Inspection Procedure 6: DIAGNOSIS MODE cannot be made an entry. Mobile Phone item is not displayed on the INFOR screen of MMCS. <Vehicles with MMCS>

⚠ CAUTION

Before replacing the hands free ECU, ensure that the power supply circuit, the earth circuit and the communication circuit are normal.

Hands Free ECU Communication Circuit

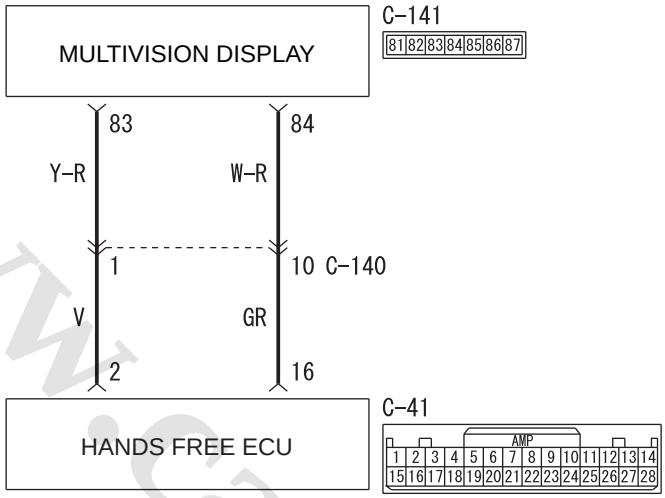

Wire colour code
B : Black LG : Light green G : Green L : Blue W : White Y : Yellow SB : Sky blue
BR : Brown O : Orange GR : Grey R : Red P : Pink V : Violet PU : Purple SI : Silver WBH54E040A

Connectors: C-141 <LHD>

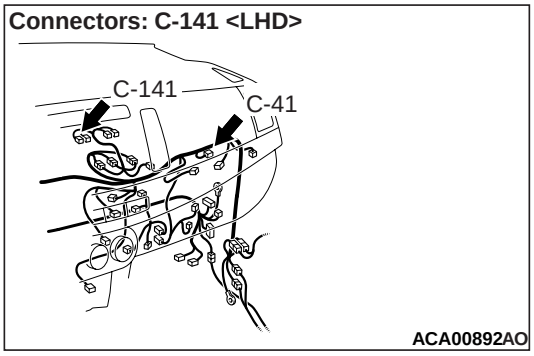

Connector: C-141 <RHD>

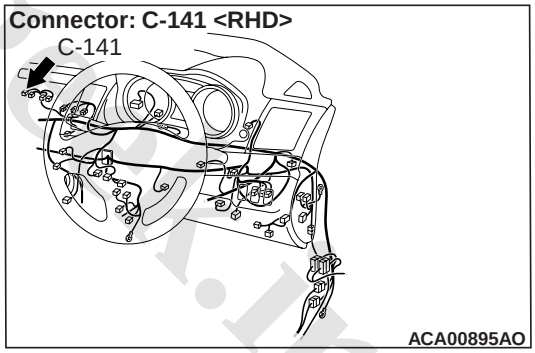

Connector: C-41 <RHD>

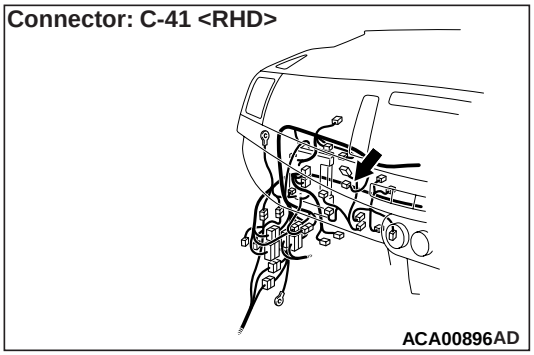

COMMENTS ON TROUBLE SYMPTOM

If the diagnosis mode cannot be made an entry, the hands free ECU, the communication between the hands free ECU, and the multivision display, or the power supply system of hands free ECU may have a problem.

PROBABLE CAUSES

- The hands free ECU may be defective.
- The multivision display may be defective.
- Damaged harness wires and connectors

www.cargeek.ir

www.CarGeek.ir

DIAGNOSIS PROCEDURE

STEP 1. Check the multivision display operation.
Check if the multivision display work normally and the sound is output.

Q: Is the check result normal?
YES : Go to Step 2.
NO : Troubleshoot the MMCS. (Refer to .)

STEP 2. Connector check: C-41 hands free ECU connector, C-141 multivision display connector

Q: Is the check result normal?
YES : Go to Step 3.
NO : Repair the defective connector.

STEP 3. Check the wiring harness between C-41 hands free ECU connector terminal No.2, 16 and C-141 multivision display connector terminal No.83, 84.

- Check the signal lines for open circuit and short circuit.

NOTE: Prior to the wiring harness inspection, check intermediate connectors C-140 and repair if necessary.

Q: Is the check result normal?
YES : Go to Step 4.
NO : Repair the wiring harness.

STEP 4. Check if the power supply circuit of hands free ECU have a problem.
Perform the inspection Procedure 1 "Check the hands free ECU power supply circuit." of the troubleshooting. (Refer to .)

Q: Is the check result normal?
YES : Go to Step 5.
NO : Repair according to the troubleshooting for reference.

STEP 5. Replace the hands free ECU temporarily, and check the trouble symptom.

Q: Is the check result normal?
YES : Replace the hands free ECU.
NO : Replace the multivision display.

www.cargeek.ir

www.CarGeek.ir

Inspection Procedure 7: Steering wheel voice control switch illumination does not come on.

⚠ CAUTION

Before replacing the ECU, ensure that the power supply circuit, the earth circuit and the communication circuit are normal.

Steering Wheel Voice Control Switch Illumination Circuit

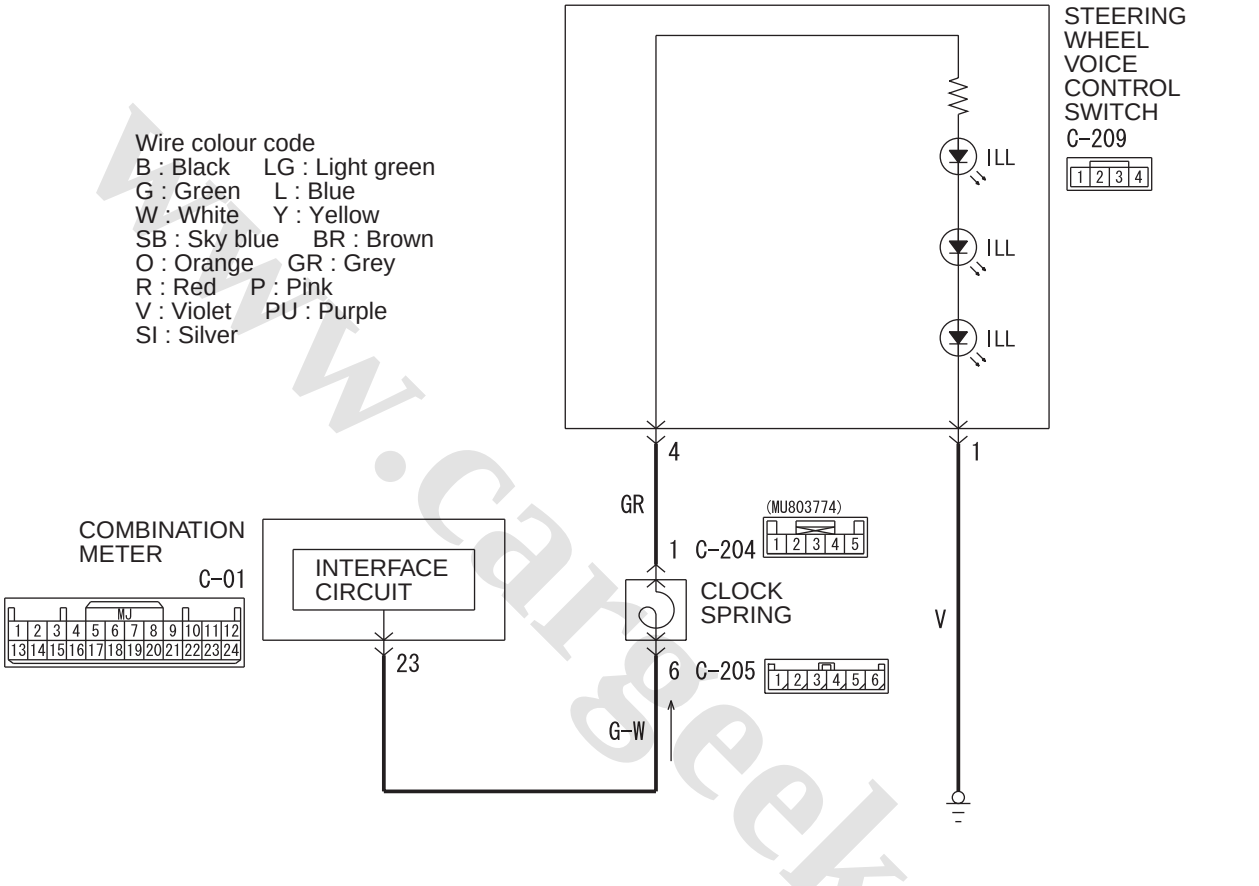

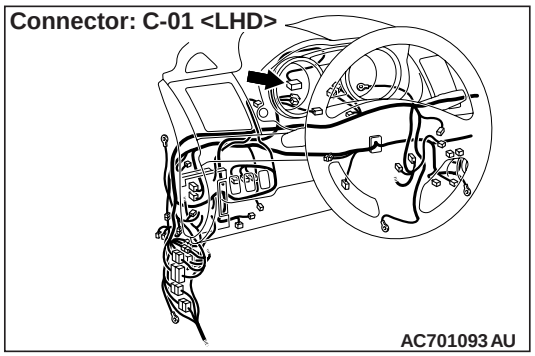

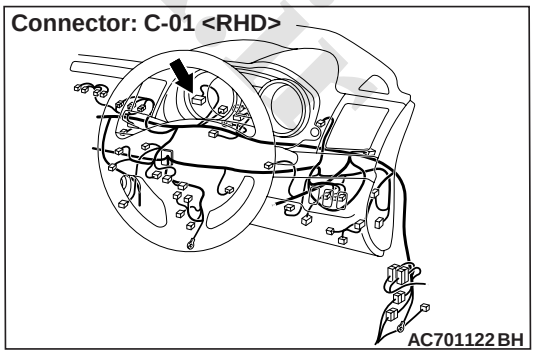

www.cargeek.ir

www.CarGeek.ir

Connectors: C-204, C-205, C-209 <LHD>

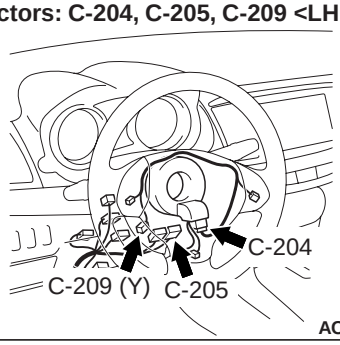

Connectors: C-204, C-205, C-209 <RHD>

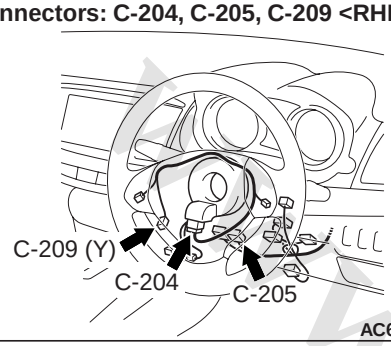

TECHNICAL DESCRIPTION (COMMENT)

The power supply circuit to the steering wheel voice control switch, the steering wheel voice control switch, the combination meter, or the clock spring may be defective.

PROBABLE CAUSES

- Malfunction of steering wheel voice control switch
- Malfunctions of combination meter
- Malfunction of the clock spring
- Damaged harness wires and connectors

DIAGNOSIS PROCEDURE

STEP 1. Connector check: C-209 steering wheel voice-control switch connector

Q: Is the check result normal?
YES : Go to Step 2.
NO : Repair the defective connector.

STEP 2. Voltage measurement at C-209 steering wheel voice control switch connector.

(1) Disconnect the connector, and measure at the wiring harness side.
(2) Turn the ignition switch to the "ACC" position, and turn the tail lamp switch to the "ON" position.
(3) Measure the voltage between terminal No.4 and body earth.

OK: System voltage

Q: Is the check result normal?
YES : Go to Step 3.
NO : Go to Step 5.

STEP 3. Check the wiring harness between C-209 steering wheel voice control switch connector terminal No.1 and body earth.

- Check the earth wire for open circuit.

Q: Is the check result normal?
YES : Go to Step 4.
NO : Repair the wiring harness.

STEP 4. Check the steering wheel voice control switch.

Check the illumination of the steering wheel voice control switch. (Refer to steering wheel voice control switch inspection.)

Q: Is the check result normal?
YES : Go to Step 10.
NO : Replace the steering wheel voice control switch.

STEP 5. Connector check: C-204 and C-205 clock spring connectors

Q: Is the check result normal?
YES : Go to Step 6.
NO : Repair the defective connector.

STEP 6. Check the clock spring.

Check whether the clock spring is in good condition. Refer to GROUP 52B – Driver's Air bag module and clock spring .

Q: Is the check result normal?
YES : Go to Step 7.
NO : Replace the clock spring.

STEP 7. Check the wiring harness between C-209 steering wheel voice control switch connector terminal No.4 and C-204 clock spring connector terminal No.1.

- Check the power supply lines open and short circuit.

Q: Is the check result normal?
YES : Go to Step 8.
NO : Repair the wiring harness.

STEP 8. Connector check: C-01 combination meter connector

Q: Is the check result normal?
YES : Go to Step 9.
NO : Repair the defective connector.

www.cargeek.ir

www.CarGeek.ir

STEP 9. Check the wiring harness between C-01 combination meter connector terminal No.23 and C-205 clock spring connector terminal No.6.

- Check the power supply line for open and short circuit.

Q: Is the check result normal?
YES : Go to Step 10.
NO : Repair the wiring harness.

STEP 10. Retest the system
Check whether the illumination of the steering wheel voice control switch comes on normally.

Q: Is the check result normal?
YES : The trouble can be an intermittent malfunction (Refer to GROUP 00, How to use Troubleshooting/inspection Service Points, How to Cope with Intermittent Malfunction).
NO : Replace the steering wheel voice control switch.

Inspection Procedure 8:Voice guide "Unable to obtain vehicle speed. Please try again or contact your dealer for service" is sent from the speaker. <Vehicles with radio and CD player>

⚠ CAUTION
Before replacing the hands free ECU, ensure that the power supply circuit, the earth circuit and the communication circuit are normal.

COMMENTS ON TROUBLE SYMPTOM
If the voice guide "Unable to obtain vehicle speed. Please try again or contact your dealer for service" is sent from the speaker, the vehicle speed signal of hands free ECU has a problem. At this time, the hands free ECU, and the vehicle speed signal of radio and CD player may have a problem.

PROBABLE CAUSES
- The hands free ECU may be defective.
- The radio and CD player may be defective.
- Damaged harness wires and connectors

DIAGNOSIS PROCEDURE

STEP 1. Check the combination meter.
Check whether the speed meter works normally. (Refer to .)

Q: Is the check result normal?
YES : Go to Step 2.
NO : Diagnose the combination meter (Refer to Combination meter – Troubleshooting).

STEP 2. M.U.T.-III CAN bus diagnostics
Use the M.U.T.-III to diagnose the CAN bus lines.

Q: Is the check result normal?
YES : Go to Step 3.
NO : Repair the CAN bus line (Refer to GROUP 54C – Troubleshooting).

STEP 3. M.U.T.-III other system diagnosis code
Check again if the diagnosis code is set to the radio and CD player.

Q: Is the diagnosis code set?
YES : Troubleshoot the radio and CD player (Refer to Diagnosis Code Chart).
NO : Go to Step 4.

STEP 4. Check the diagnosis mode
Check if the hands free ECU can be switched to the diagnosis mode.(Refer to .)

Q: Is the check result normal?
YES : Go to Step 5.
NO : Perform Inspection Procedure 5: "DIAGNOSIS MODE cannot be made an entry."(Refer to .)

STEP 5. Replace the hands free ECU temporarily, and check the trouble symptom.

Q: Is the check result normal?
YES : Replace the hands free ECU.
NO : Replace the radio and CD player.

www.cargeek.ir

www.CarGeek.ir

Inspection Procedure 8:Voice guide "Unable to obtain vehicle speed. Please try again or contact your dealer for service" is sent from the speaker. <Vehicles with MMCS>

⚠ CAUTION

Before replacing the hands free ECU, ensure that the power supply circuit, the earth circuit and the communication circuit are normal.

COMMENTS ON TROUBLE SYMPTOM

If the voice guide "Unable to obtain vehicle speed. Please try again or contact your dealer for service" is sent from the speaker, the vehicle speed signal of hands free ECU has a problem. At this time, the hands free ECU, and the vehicle speed signal of multivision display may have a problem.

PROBABLE CAUSES

- The hands free ECU may be defective.
- The multivision display may be defective.
- Damaged harness wires and connectors

DIAGNOSIS PROCEDURE

STEP 1. Check the combination meter.

Check whether the speed meter works normally. (Refer to .)

Q: Is the check result normal?

YES : Go to Step 2.

NO : Diagnose the combination meter (Refer to Combination meter – Troubleshooting).

STEP 2. Check the multivision operation

check if the own vehicle mark is dislocated while driving.

Q: Is the check result normal?

YES : Go to Step 3.

NO : Diagnose the MMCS (Refer to .)

STEP 3. M.U.T.-III other system diagnosis code

Check the diagnosis code is set to the CAN box unit.

Q: Is the diagnosis code set?

YES : Troubleshoot the MMCS (Refer to Diagnosis Code Chart).

NO : Go to Step 4.

STEP 4. Check the diagnosis mode

Check if the hands free ECU can be switched to the diagnosis mode.(Refer to .)

Q: Is the check result normal?

YES : Go to Step 5.

NO : Perform Inspection Procedure 6: "DIAGNOSIS MODE cannot be made an entry. Mobile Phone item is not displayed on the INFOR screen of MMCS." (Refer to .)

STEP 5. Replace the hands free ECU temporarily, and check the trouble symptom.

Q: Is the check result normal?

YES : Replace the hands free ECU.

NO : Replace the multivision display.

ON-VEHICLE SERVICE

METHODS FOR PAIRING AND PAIRING DELETION WITH BLUETOOTH® DEVICE USING STEERING WHEEL VOICE CONTROL SWITCH

M1544405500432

NOTE:

- *Some Bluetooth® devices (mobile phone or music player) may not be compatible with the hands free ECU.*
- *A maximum of seven Bluetooth® devices can be registered.*
- *This system cannot be used when a battery of Bluetooth® devices was exhausted.*

PAIRING METHOD

Shift the selector lever to P (parking) position <CVT, A/T> or shift lever to N (neutral) position <M/T> and pull the parking brake lever.

1. Turn the ignition switch to "ACC" or "ON" position.

www.cargeek.ir

www.CarGeek.ir

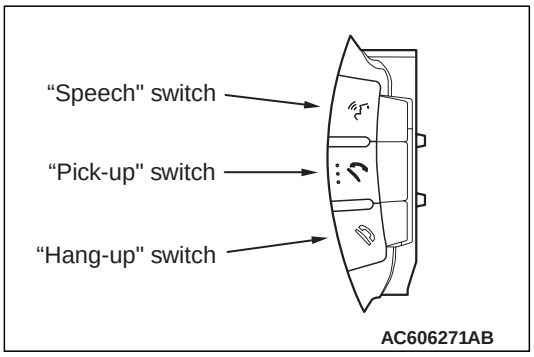

2. Press the "Speech" switch.
3. Say "Setup."
4. Say "Pairing options."
5. The voice guide will say "Select one of the following: pair, edit, delete, or list?"
6. Say "Pair."
7. The voice guide will say "Please say a 4-digit pairing code."
8. Say a 4 digit number. The 4 digit number will be registered as a pairing code for the device.
   - When the confirmation function is on, the system will confirm whether the number said is acceptable. Answer "Yes" to go Step 10. Say "No" to return to pairing code selection.

NOTE:
- *The pairing code entered here is only used for the Bluetooth® connection certification. It is any 4-digit number the user would like to select.*
- *Remember the pairing code as it needs to be keyed into the device later in the pairing process.*
- *Depending on the connection settings of the Bluetooth® device, this code may have to be entered each time you connect the Bluetooth® device to the hands free ECU. For the default connection settings, refer to the instructions for device.*

9. The voice guide will say "Start pairing procedure on device. See device manual for instructions." Refer to the owner's manual for your device and enter into the device the pairing code that was registered in Step 9.
10. When this system finds a Bluetooth® device, the voice guide will say "Please say the name of the device after the beep."
11. After you hear the beep, name the device by saying a name of your preference.

    NOTE: When the confirmation function is on, after repeating the device tag you have said, the voice guide will ask "Is this correct?" Answer "Yes". To change the device tag, answer "No" and then say the device tag again.
12. The voice guide will say "Pairing complete," after which a beep will be played and the pairing process will end.

PAIRING DELETION METHOD

1. Turn the ignition switch to "ACC" or "ON" position.
2. Press the Speech switch.
3. Say "Setup."
4. Say "Pairing options"
5. The voice guide will say "Select one of the following: pair, edit, delete, or list"
6. Say "Delete."
7. After the voice guide says "Please say," the numbers of the devices and device tags of corresponding devices will be read out in order, starting with the device that has been most recently connected. After it completes reading all pairs, the voice guide will say "or all."
   Say the number of the device that you want to delete from the system.
   If you want to delete all paired devices from the system, say "All."
8. For confirmation purposes, the voice guide will say "Deleting (device tag) (number). Is this correct?" or "Deleting all devices, Is this correct?"
9. Answer "Yes" to delete the devices.
   Answer "No" the system will return to Step 4.
10. The voice guide will say "Deleted", and then the system will end the device deletion process.
    - If the device deletion process fails for some reason, the voice guide will say "Delete failed." and then the system will cancel deleting the device.

www.cargeek.ir

www.CarGeek.ir

METHODS FOR PAIRING AND PAIRING DELETION WITH BLUETOOTH® DEVICE USING MULTIVISION DISPLAY <EXCEPT VEHICLES FOR RUSSIA>

M1544405500108

As for vehicles with MMCS, "pairing" registration of the Bluetooth® device and deletion of paired device from hands free ECU can be done by touch panel operation on the multivision display.

NOTE:

- *Some Bluetooth® devices (cellular phone and music player) may not be compatible with the hands free ECU.*
- *A maximum of seven Bluetooth® devices can be registered.*
- *This system cannot be used when a battery of Bluetooth® devices was exhausted.*

DISPLAY THE PAIRING LIST SCREEN.

OPERATION ON THE MOBILE PHONE SCREEN

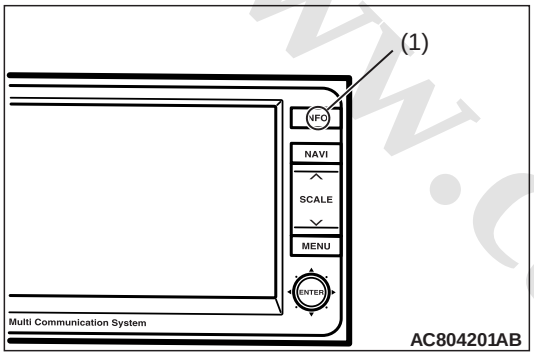

1. When press the (1) in the illustration.

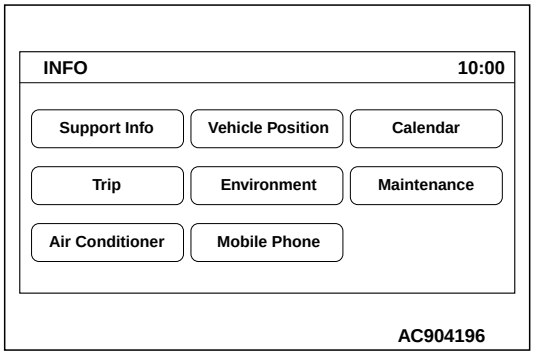

2. Display the INFOR screen, and select "Mobile Phone."

   NOTE: When there are no active connections between the Bluetooth® Audio and the hands free ECU, "There are no active connections." is displayed.

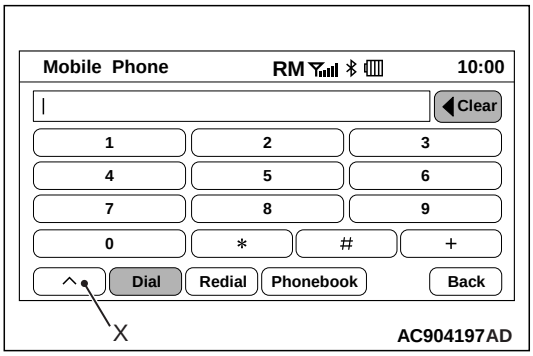

3. Select "X" in the illustration on the Mobile Phone screen.

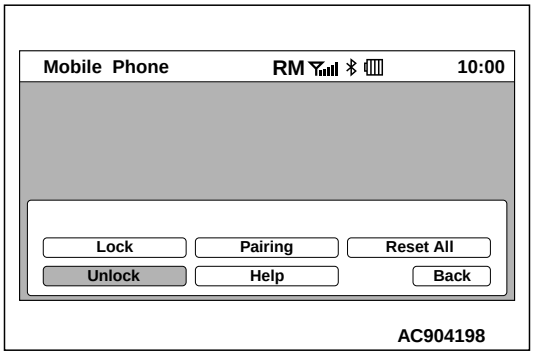

4. Select "Pairing."

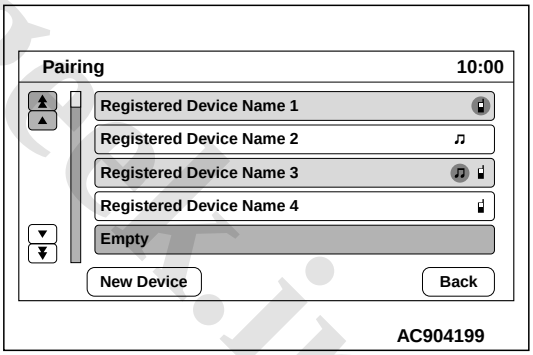

5. The pairing list screen is displayed.

OPERATION ON THE A/V MODE SCREEN

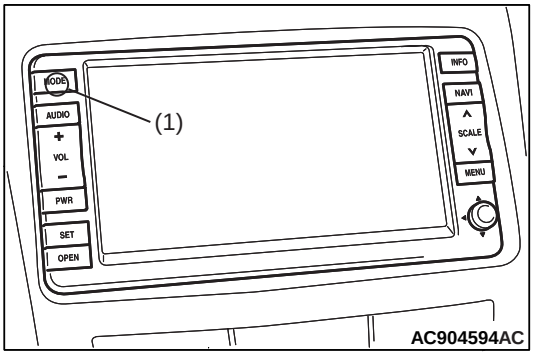

1. Press the (1) in the illustration.

www.cargeek.ir

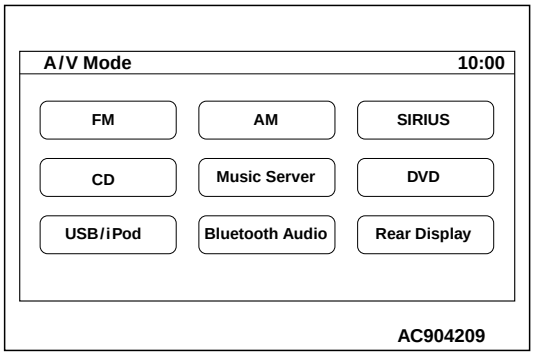

2. Display the A/V mode screen, and select "Bluetooth Audio."

   NOTE: When there are no active connections between the Bluetooth® Audio and the hands free ECU, "There are no active connections." is displayed.

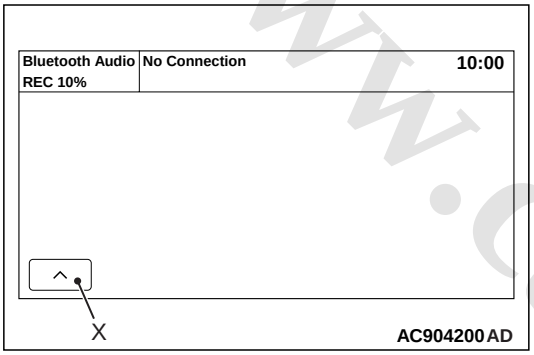

3. Select "X" in the illustration on the Bluetooth Audio screen.

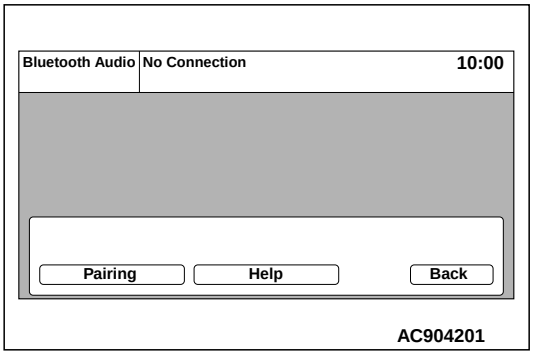

4. Select "Pairing."

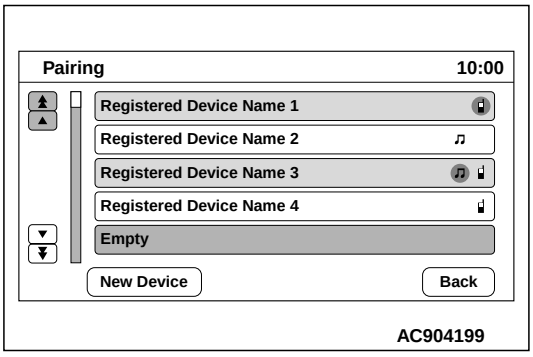

5. The pairing list screen is displayed.

PAIRING OPERATION OF BLUETOOTH® DEVICE

Shift the selector lever to P (parking) position and pull the parking brake lever.

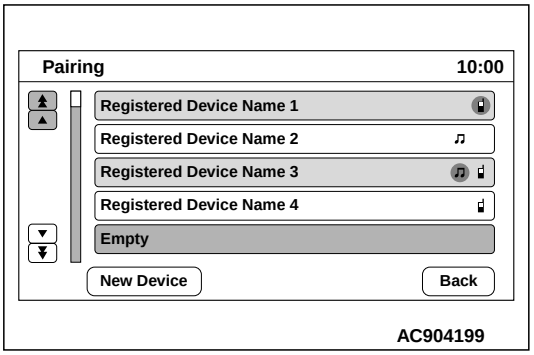

1. Display the pairing list screen, and select "New Device."

   NOTE: When the vehicle is being driven, or when the vehicle is driven during the pairing operation, "This function is disabled while driving." is displayed for 4 seconds, and the display returns to the pairing list screen.

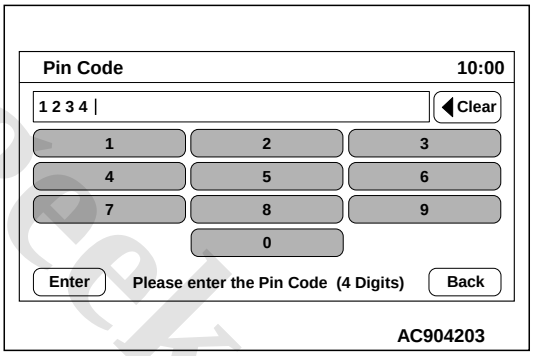

2. Enter the 4-digit code on the Pin code screen, and select "Enter."
3. "Begin Pairing procedure on device. See device's manual for instructions." is displayed on the screen.
4. Refer to the owner's manual for your device and enter into the device the pin code.

NOTE: When "Cancel" is selected or the pairing is failed, the display returns to the pairing list screen.

www.cargeek.ir

www.CarGeek.ir

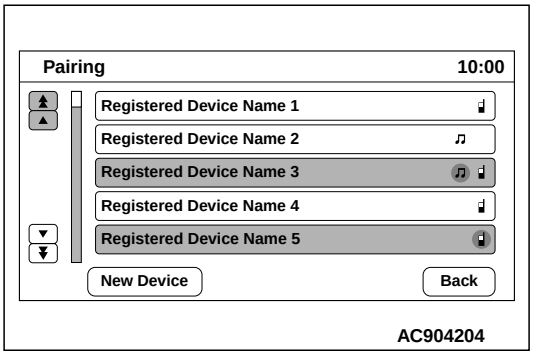

5. When the pairing is completed, the display returns to the pairing list screen.

NOTE: When 7 Bluetooth® devices are already paired to the hands free ECU, "Maximum device paired. Please delete a paired device before pairing a new device." is displayed.

DELETE OPERATION OF BLUETOOTH® DEVICE

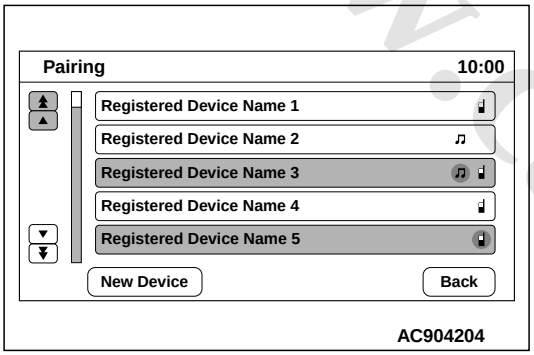

1. Display the pairing list screen, and select the "Bluetooth® device" to be deleted.

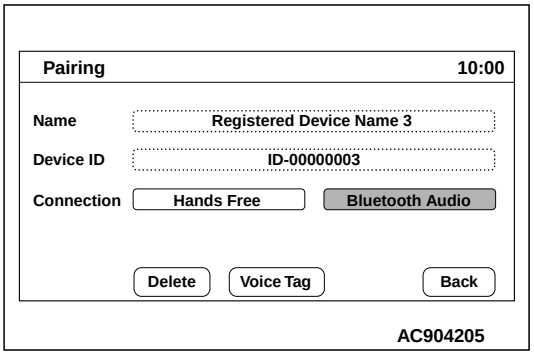

2. Select "Delete."

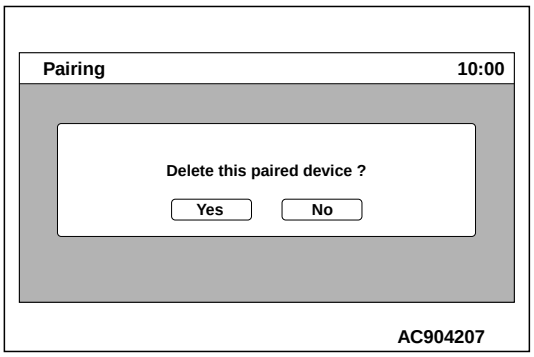

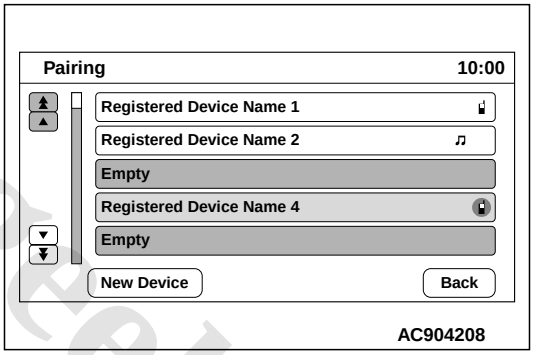

3. When "Yes" is selected, the Bluetooth® device is deleted and the display returns to the pairing list screen.

METHODS FOR PAIRING AND PAIRING DELETION WITH BLUETOOTH® DEVICE USING MULTIVISION DISPLAY <VEHICLES FOR RUSSIA>

M1544405500120

As for vehicles with MMCS, "pairing" registration of the Bluetooth® device and deletion of paired device from hands free ECU can be done by touch panel operation on the multivision display.

NOTE:

- *Some Bluetooth® devices (cellular phone and music player) may not be compatible with the hands free ECU.*
- *A maximum of seven Bluetooth® devices can be registered.*
- *This system cannot be used when a battery of Bluetooth® devices was exhausted.*

DISPLAY THE PAIRING LIST SCREEN.

OPERATION ON THE MOBILE PHONE SCREEN

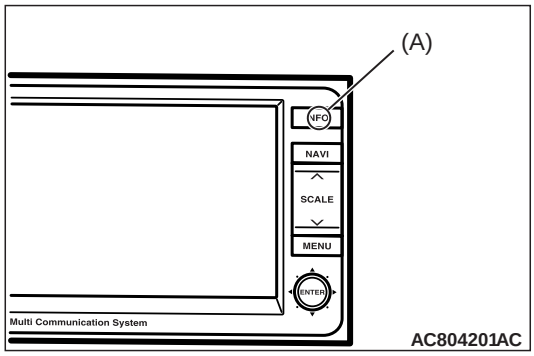

www.cargeek.ir

www.CarGeek.ir

1. When press the (A) in the illustration.

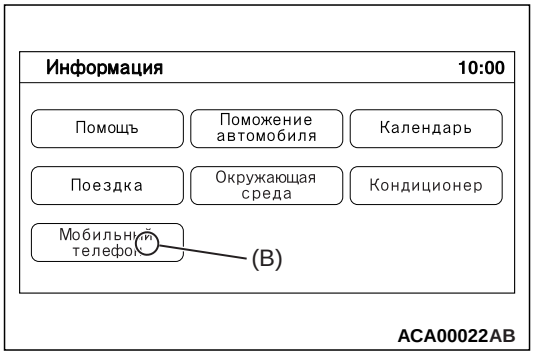

2. Select (B) in the illustration.

NOTE:

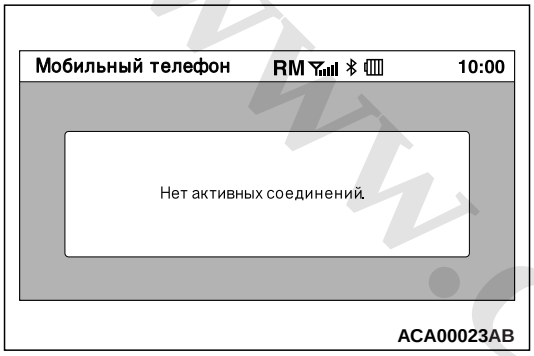

When there are no active connections between the Bluetooth® Audio and the hands free ECU, error message in the illustration is displayed.

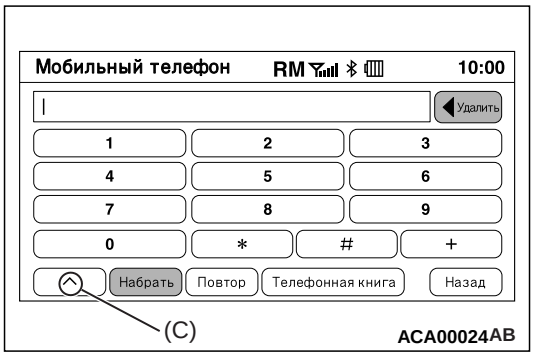

3. Select (C) in the illustration.

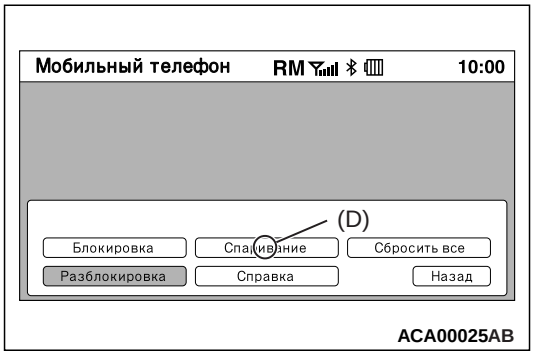

4. Select (D) in the illustration.

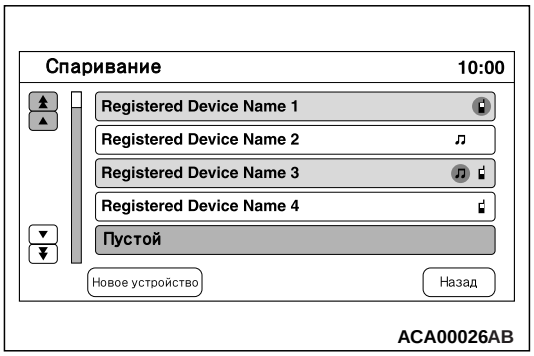

5. The pairing list screen is displayed.

OPERATION ON THE A/V MODE SCREEN

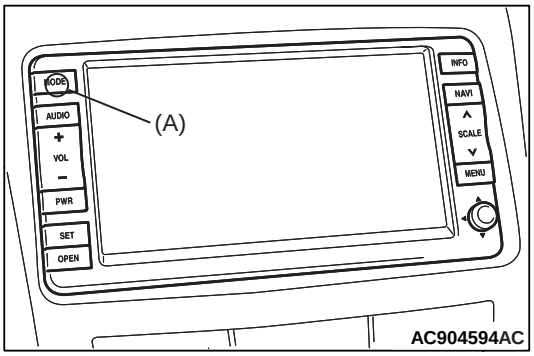

1. Press the (A) in the illustration.

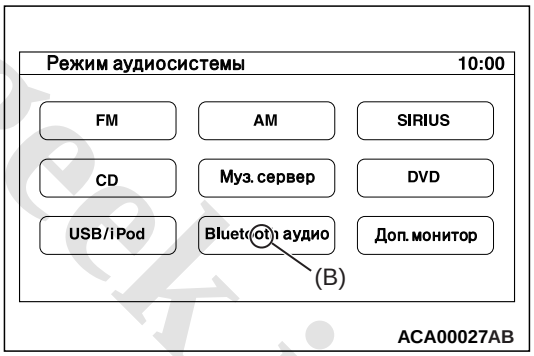

2. Select (B) in the illustration.

NOTE:

When there are no active connections between the Bluetooth® Audio and the hands free ECU, error message in the illustration is displayed.

www.cargeek.ir

www.CarGeek.ir

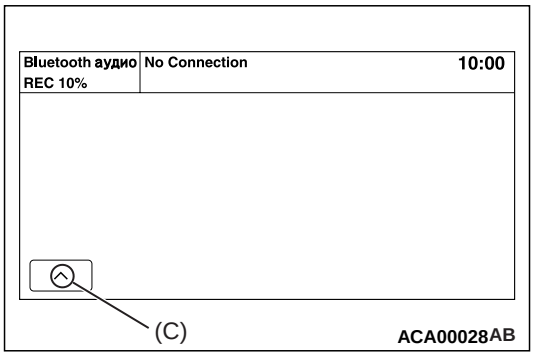

3. Select (C) in the illustration.

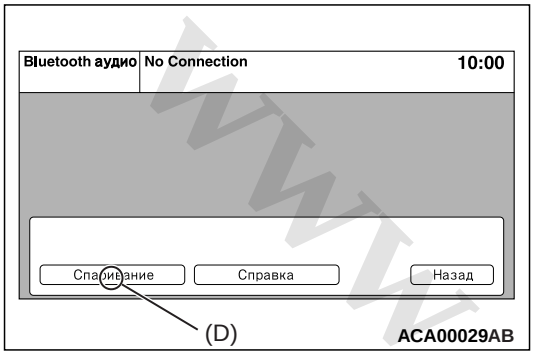

4. Select (D) in the illustration.

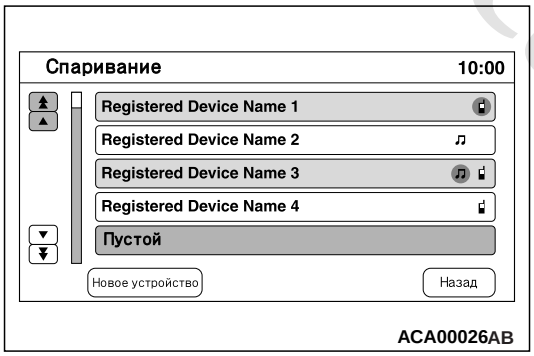

5. The pairing list screen is displayed.

PAIRING OPERATION OF BLUETOOTH® DEVICE

Shift the selector lever to P (parking) position and pull the parking brake lever.

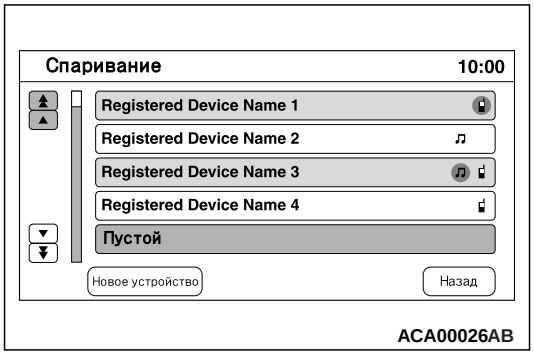

1. Display the pairing list screen.

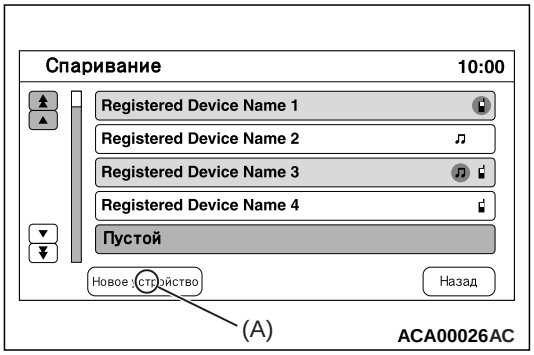

2. Select (A)

NOTE:

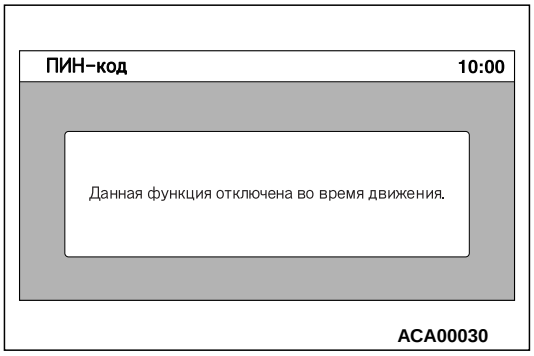

When the vehicle is being driven, or when the vehicle is driven during the pairing operation, error message in the illustration is displayed for 4 seconds, and the display returns to the pairing list screen.

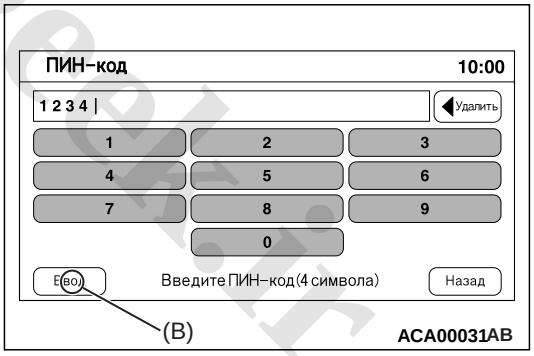

3. Enter the 4-digit code on the Pin code screen, and select (B).

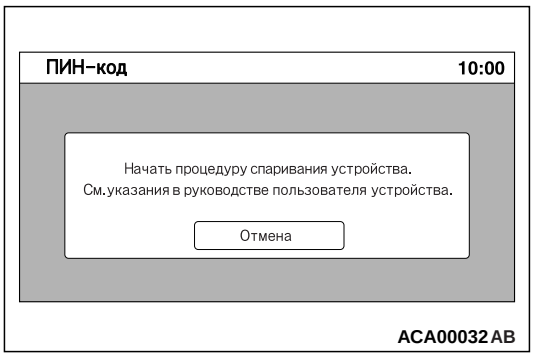

www.cargeek.ir

www.CarGeek.ir

4. The message in the illustration is displayed on the screen.
5. Refer to the owner's manual for your device and enter into the device the pin code.

NOTE: When (B) is selected or the pairing is failed, the display returns to the pairing list screen.

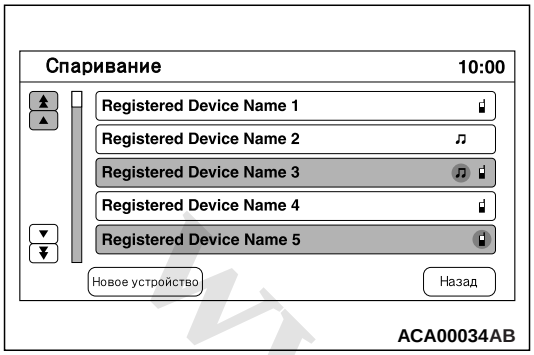

6. When the pairing is completed, the display returns to the pairing list screen.

NOTE:

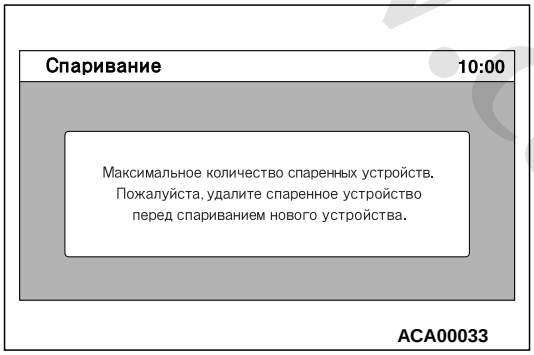

When 7 Bluetooth® devices are already paired to the hands free ECU, the message in the illustration is displayed.

DELETE OPERATION OF BLUETOOTH® DEVICE

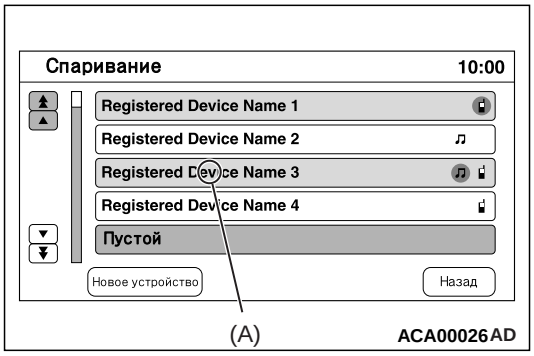

1. Display the pairing list screen, and select the (A) to be deleted.

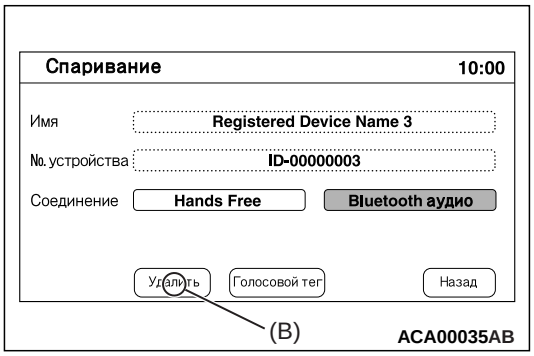

2. Select (B).

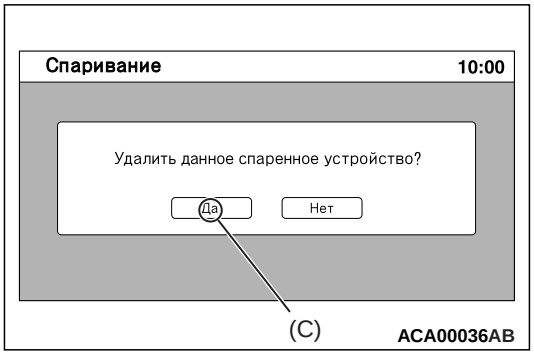

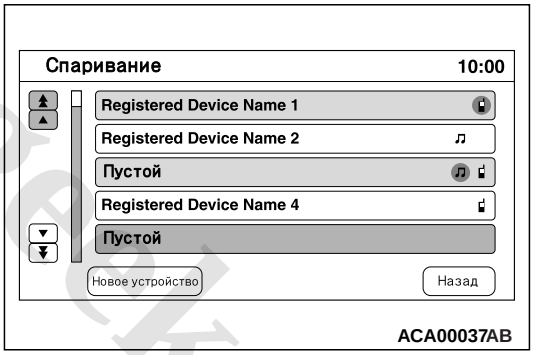

3. When (C) is selected, the Bluetooth® device is deleted and the display returns to the pairing list screen.

www.cargeek.ir

www.CarGeek.ir

ERASE THE PASSWORD

M1544403800341

The 4-digit password set by security function can be erased by the diagnosis mode. Perform the "UNLOCK" operation of the diagnosis mode. (Refer to <Vehicles with radio and CD player>, <Vehicles with MMCS>.)

HANDS FREE ECU REMOVAL AND INSTALLATION

M1544405400101

Pre-removal operation	Post-installation operation
• Removal of glove box cover (Refer to GROUP 52A – glove box)	• Installation of glove box cover (Refer to GROUP 52A – glove box)

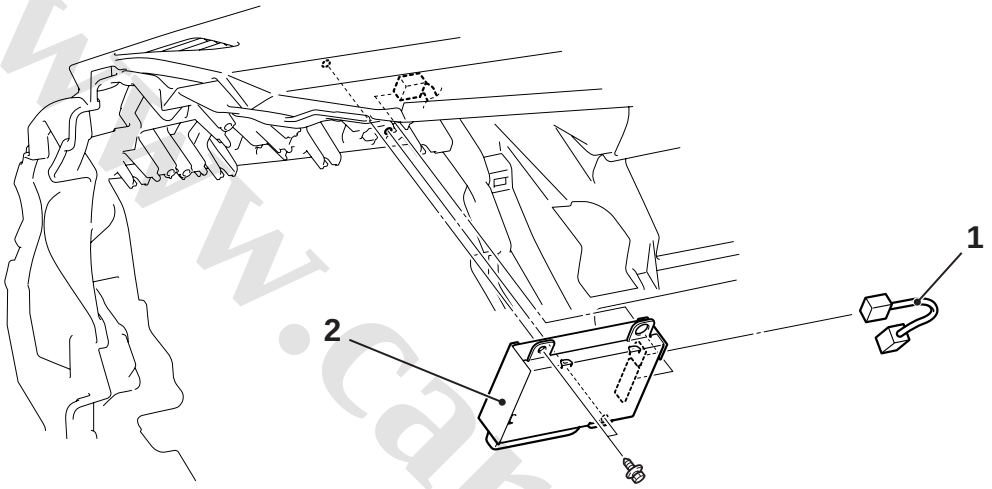

ACA00184AB

Removal Steps

1. USB cable
2. Hands free ECU

MICROPHONE UNIT REMOVAL AND INSTALLATION

M1546023300175

Pre-removal operation	Post-installation operation
• Removal of front room lamp (Refer to)	• Installation of front room lamp (Refer to)

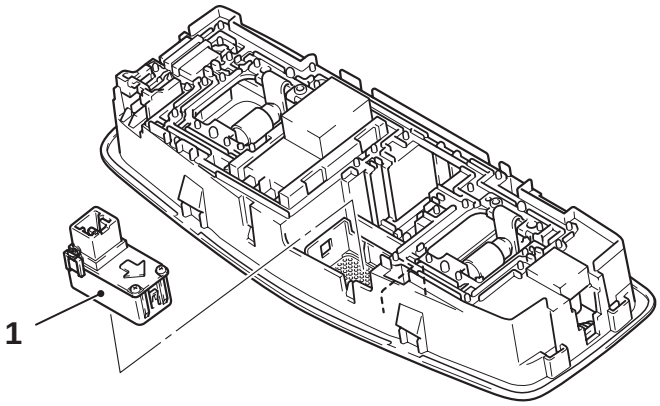

AC606269AD

www.cargeek.ir

www.CarGeek.ir

Removal steps

>>A<< 1. Microphone unit

INSTALLATION SERVICE POINT

>>A<< MICROPHONE UNIT INSTALLATION

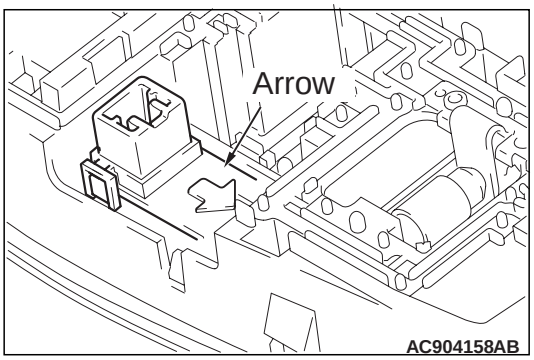

Install the microphone unit so that the arrow face toward the driver's seat.

STEERING WHEEL VOICE CONTROL SWITCH REMOVAL AND INSTALLATION

M1546024200320

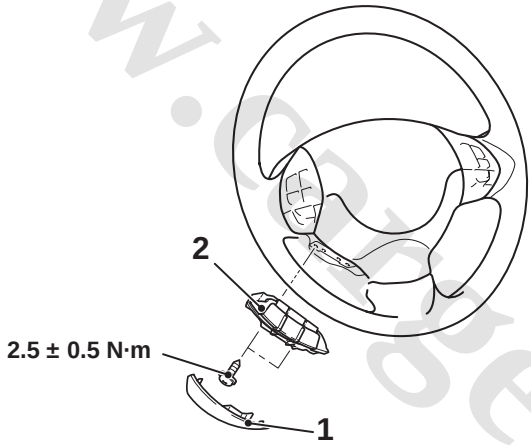

Removal Steps

1. Steering wheel voice control switch cover
2. Steering wheel voice control switch

USB ADAPTER REMOVAL AND INSTALLATION

M1549100800197

For the removal and installation of the USB adapter, refer to .

www.cargeek.ir

www.CarGeek.ir

INSPECTION

STEERING WHEEL VOICE-CONTROL SWITCH CONTINUITY CHECK

M1544401100421

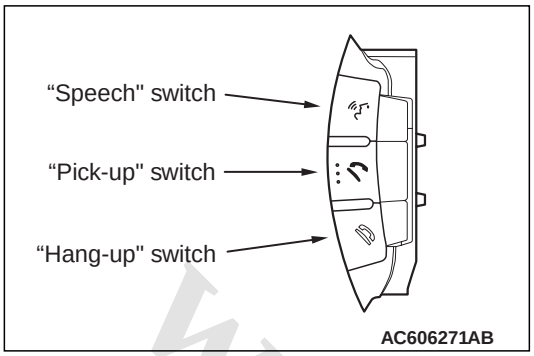

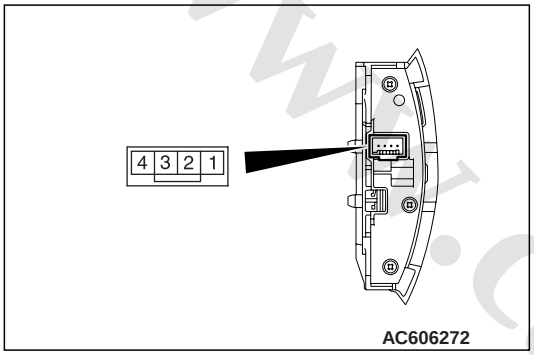

Use an ohmmeter to measure the resistance value between the terminal.

Switch position	Tester connection	Measurement value
No push	2 – 3	Approximately 74 kΩ
"Speech" switch		Approximately 1.5 kΩ
"Pick-up" switch		Approximately 3.3 kΩ
"Hang-up" switch		Approximately 6.0 kΩ

ILLUMINATION CHECK

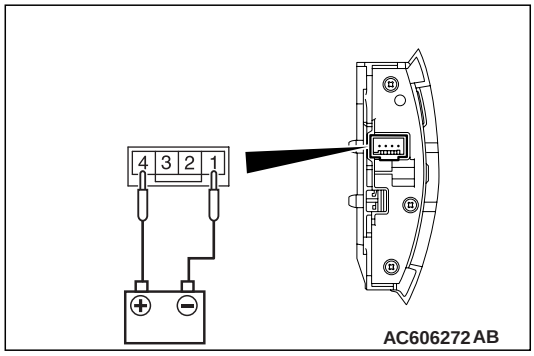

Apply the battery voltage of steering wheel voice control switch connector terminal No. 4 and 1, and check if the steering wheel audio remote control switch illuminates.

NOTE: Make sure that the polarity is correct.

USB ADAPTER INSPECTION

M1549101100113

1. Remove the USB adapter. (Refer to)
2. Check that the continuity exists between the front side terminals of USB adapter and rear side terminals of USB adapter.

www.cargeek.ir

www.CarGeek.ir

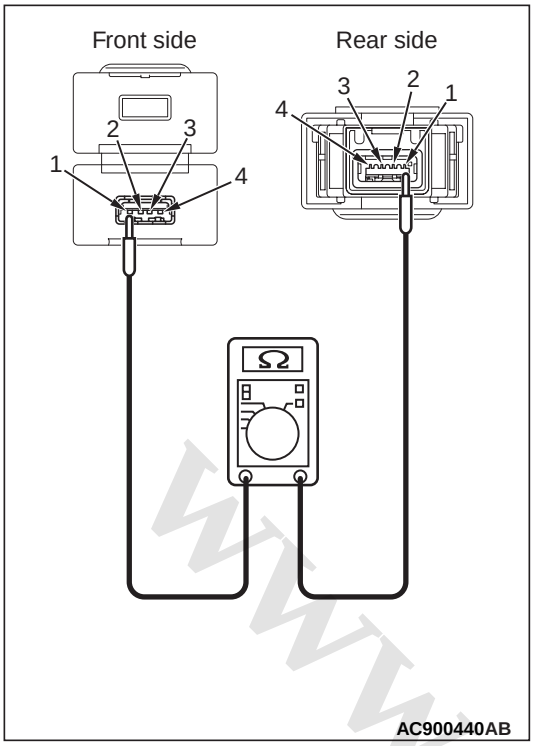

Front side terminal	Rear side terminal	Measurement value
1	1	Continuity exists (2 Ω or less)
2	2	
3	3	
4	4	

www.cargeek.ir

www.cargeek.ir

www.CarGeek.ir

AMPLIFIER

REMOVAL AND INSTALLATION

M1544004100778

⚠ CAUTION

To remove the front seat assembly of vehicle with side air bag, refer to GROUP 52B – Service Precautions and Side-Air Bag Module(S) .

Pre-removal operation	Post-installation operation
• Removal of front seat assembly (LH) (Refer to GROUP 52A – Front Seat Assembly)	• Installation of front seat assembly (Refer to GROUP 52A – Front Seat Assembly)

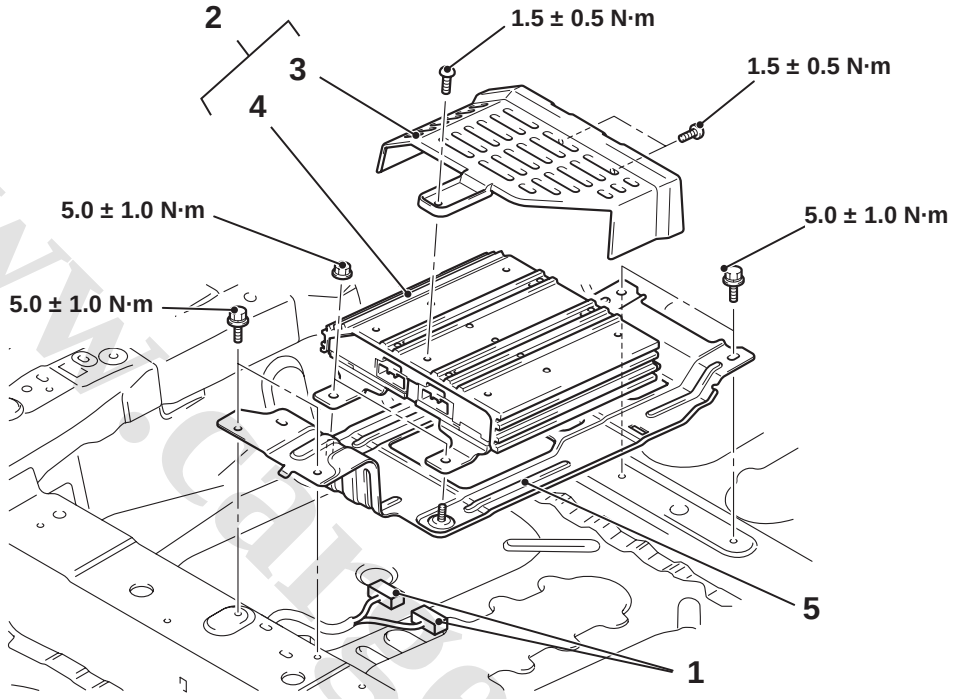

AC801900AB

Removal Steps

1. Connector connection to audio amplifier
2. Audio amplifier/ audio amplifier cover
3. Audio amplifier cover
4. Audio amplifier
5. <<A>> Audio amplifier box bracket

REMOVAL SERVICE POINT

<<A>> REMOVAL OF AUDIO AMPLIFIER BOX BRACKET

Turn up and remove the carpet.

SPEAKER

ON-VEHICLE SERVICE

SPEAKER TEST

M1544100500599

RADIO AND CD PLAYER SPEAKER CONNECTION CHECK MODE

Enter the speaker connection check mode according to the following steps:

1. Turn the Ignition switch to the "ACC" or "ON" position and switch off the radio and CD player.

www.cargeek.ir

www.CarGeek.ir

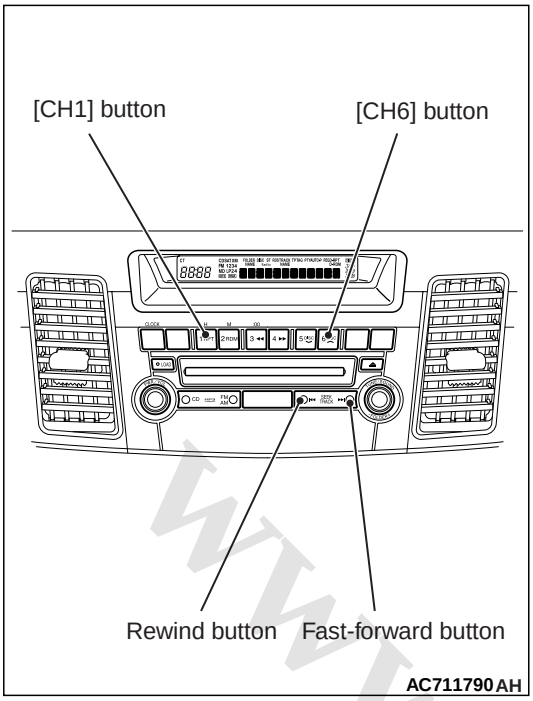

2. Press the following buttons in that order within sixty seconds from step (1).
   (1) [CH1] button
   (2) Rewind button
   (3) Fast-forward button
   (4) [CH6] button

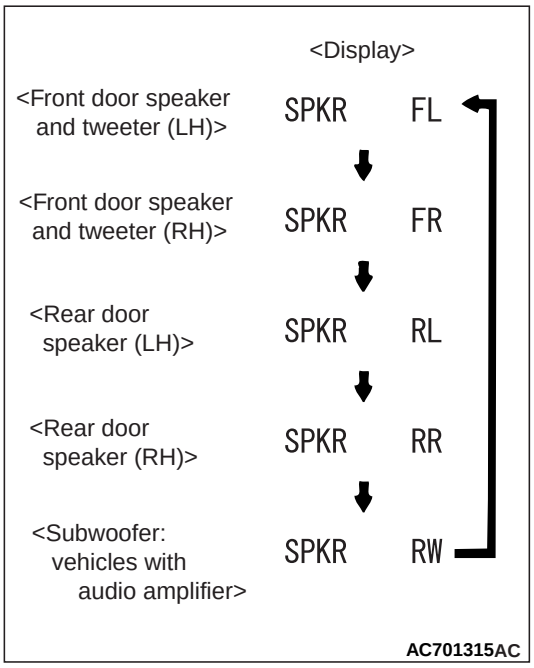

3. Check that the speaker, which is displayed on the centre panel display, sounds (If the [CH6] button is pressed, the speaker will be changed).

NOTE: The display of "FL", "FR", "RL", "RR","RW"blinks.

4. If a button other than the [CH6] button is pressed, or the ignition switch is turned to "LOCK" (OFF) position, you will exit from the speaker connection check mode.

BUZZ NOISE CHECK MODE

Inserting a CD during the speaker connection check mode shifts the mode to the buzz noise check mode, and the buzz noise sound of each speaker can be checked.
As with the speaker connection check mode, press the [CH6] button to switch the output speaker of the buzz noise check sound.
Check that the buzz noise sound is output from the output speaker of buzz noise check sound.

NOTE: "SPKR" is displayed as "BUZZ" during buzz noise check mode.

SPEAKER TEST <VEHICLES WITH MMCS>

M1544100500124

Refer to MMCS service mode .

www.cargeek.ir

www.CarGeek.ir

REMOVAL AND INSTALLATION

M1544100300443

FRONT DOOR SPEAKER

Pre-removal operation	Post-installation operation
• Removal of front door trim (Refer to GROUP 52A – Door trim)	• Installation of front door trim (Refer to GROUP 52A – Door trim) • Learning of the power window fully closed position (Refer to GROUP 42A – Door, On-vehicle service .)

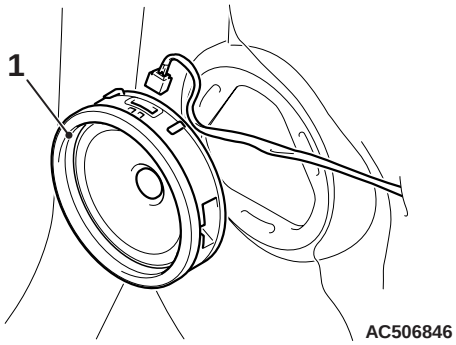

AC802122AB

Removal Step

<<**A**>> 1. Front door speaker

REAR DOOR SPEAKER

Pre-removal operation	Post-installation operation
• Removal of rear door trim (Refer to GROUP 52A – Door trim)	• Installation of rear door trim (Refer to GROUP 52A – Door trim) • Learning of the power window fully closed position (Refer to GROUP 42A – Door, On-vehicle service .)

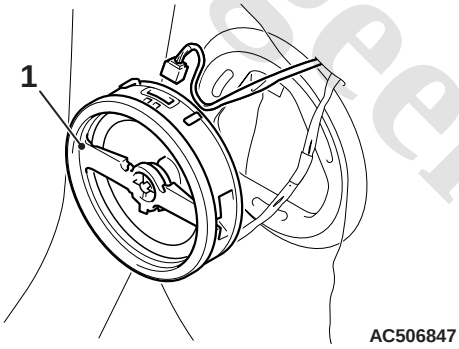

AC802123AB

Removal Step

<<**A**>> 1. Rear door speaker

www.cargeek.ir

www.CarGeek.ir

TWEETER

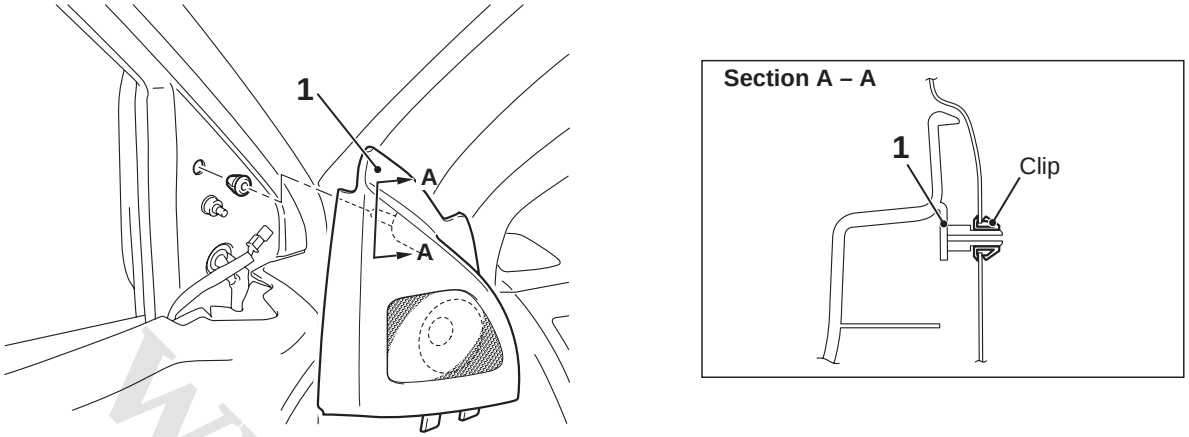

AC608780AB

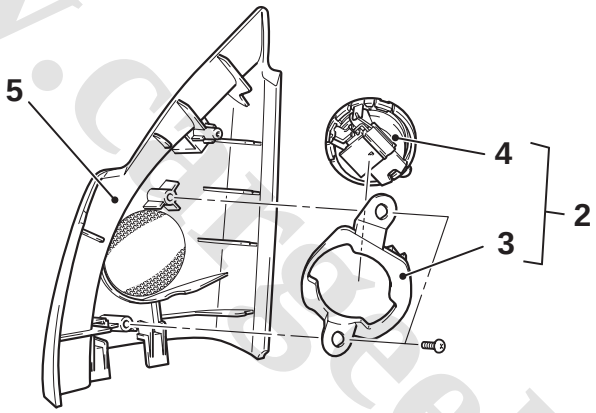

AC608782AB

Removal Steps

1. Front door sash trim assembly
2. Tweeter bracket and Tweeter
3. Tweeter bracket

Removal Steps (Continued)

4. Tweeter
5. Front door sash trim

www.cargeek.ir

www.CarGeek.ir

SUBWOOFER <LANCER>

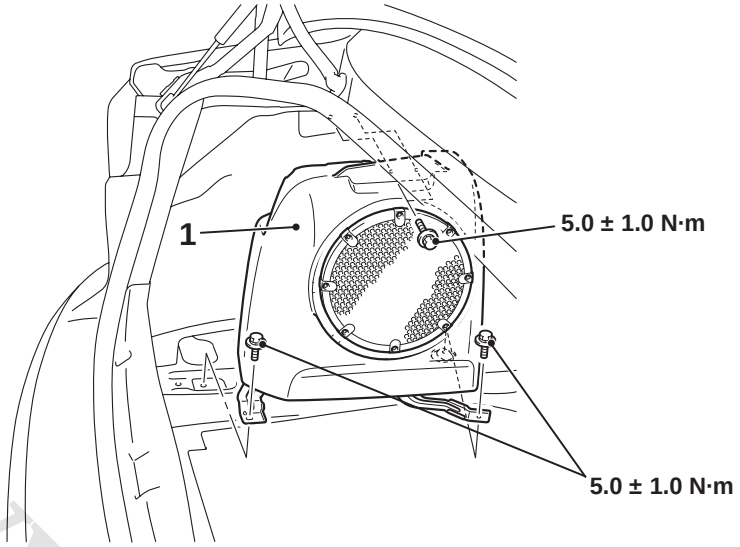

AC608803AE

Removal Step

1. Rear speaker box assembly

SUBWOOFER <LANCER SPORTBACK>

Pre-removal operation	Post-installation operation
Removal of quarter trim (LH) (Refer to GROUP 52A – Quarter Trim)	Installation of quarter trim (LH) (Refer to GROUP 52A – Quarter Trim)

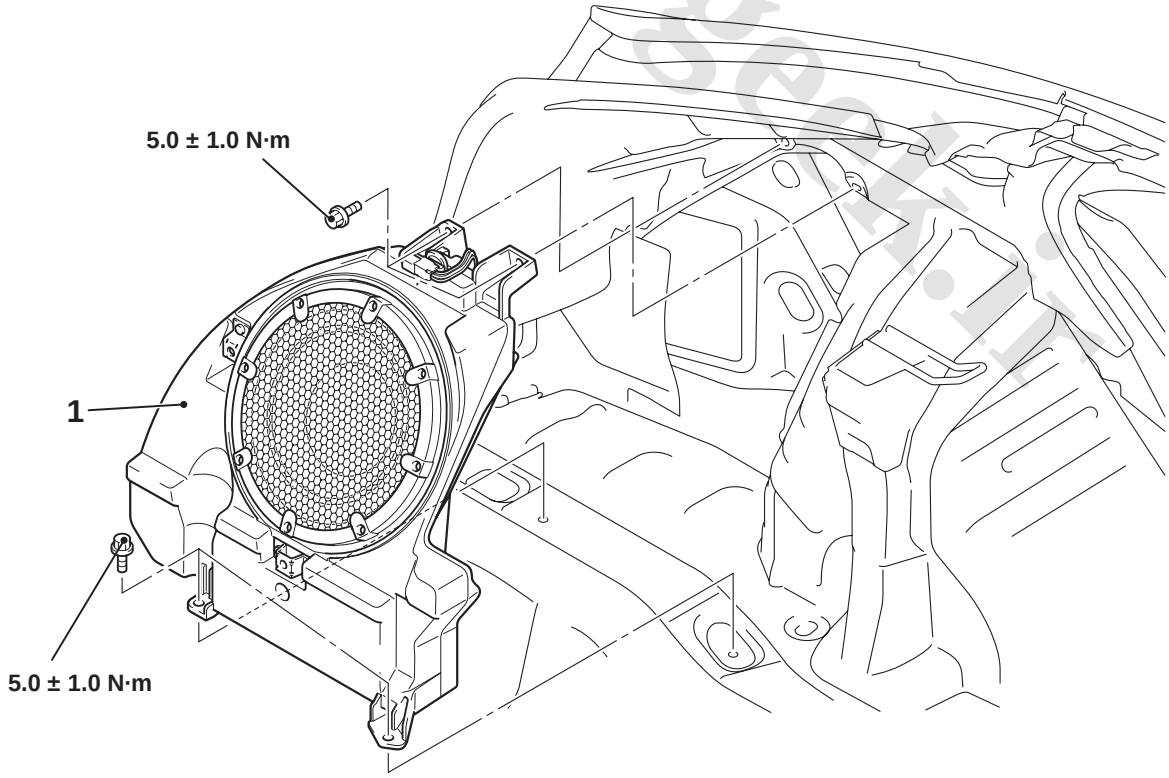

AC801904AB

www.cargeek.ir

www.CarGeek.ir

Removal Steps

>>**A**<< 1. Rear speaker box assembly

REMOVAL SERVICE POINT

<<A>> REMOVAL OF FRONT DOOR SPEAKER AND REAR DOOR SPEAKER

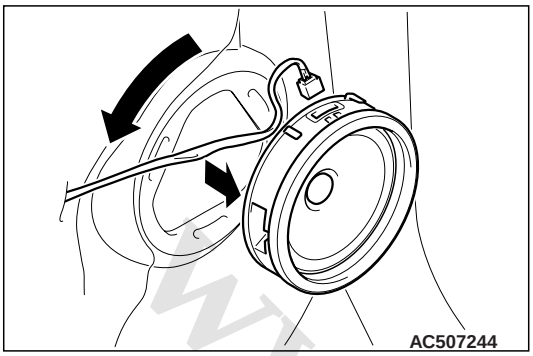

Disconnect the connector, and remove by twisting as shown in the figure.

INSTALLATION SERVICE POINT

>>A<< REAR SPEAKER BOX ASSEMBLY INSTALLATION

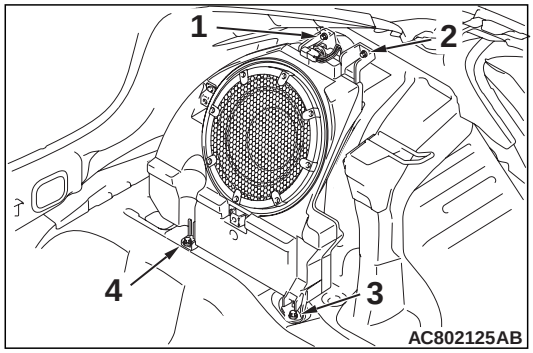

Tighten the bolts in the order of 1, 2, 3, 4 shown in the figure.

www.cargeek.ir

www.cargeek.ir

www.CarGeek.ir

ANTENNA

REMOVAL AND INSTALLATION

M1544200200960

<LHD>

Pre-removal operation <Only Antenna base and Antenna feeder>	Post-installation operation <Only Antenna base and Antenna feeder>
• Removal of headlining (Refer to GROUP 52A – Headlining). • Removal of grove box cover (Refer to GROUP 52A – Grove box). • Removal of AS&G-ECU bracket (Refer to GROUP 17 - AS&G-ECU).<Vehicles with Auto Stop & Go (AS&G) System> • Removal of radio and CD player or multivision display (Refer to <vehicles with radio and CD player> or <vehicles with MMCS>).	• Installation of radio and CD player or multivision display (Refer to <vehicles with radio and CD player> or <vehicles with MMCS>). • Installation of AS&G-ECU bracket (Refer to GROUP 17 - AS&G-ECU).<Vehicles with Auto Stop & Go (AS&G) System> • Installation of grove box cover (Refer to GROUP 52A – Grove box). • Installation of headlining (Refer to GROUP 52A – Headlining).

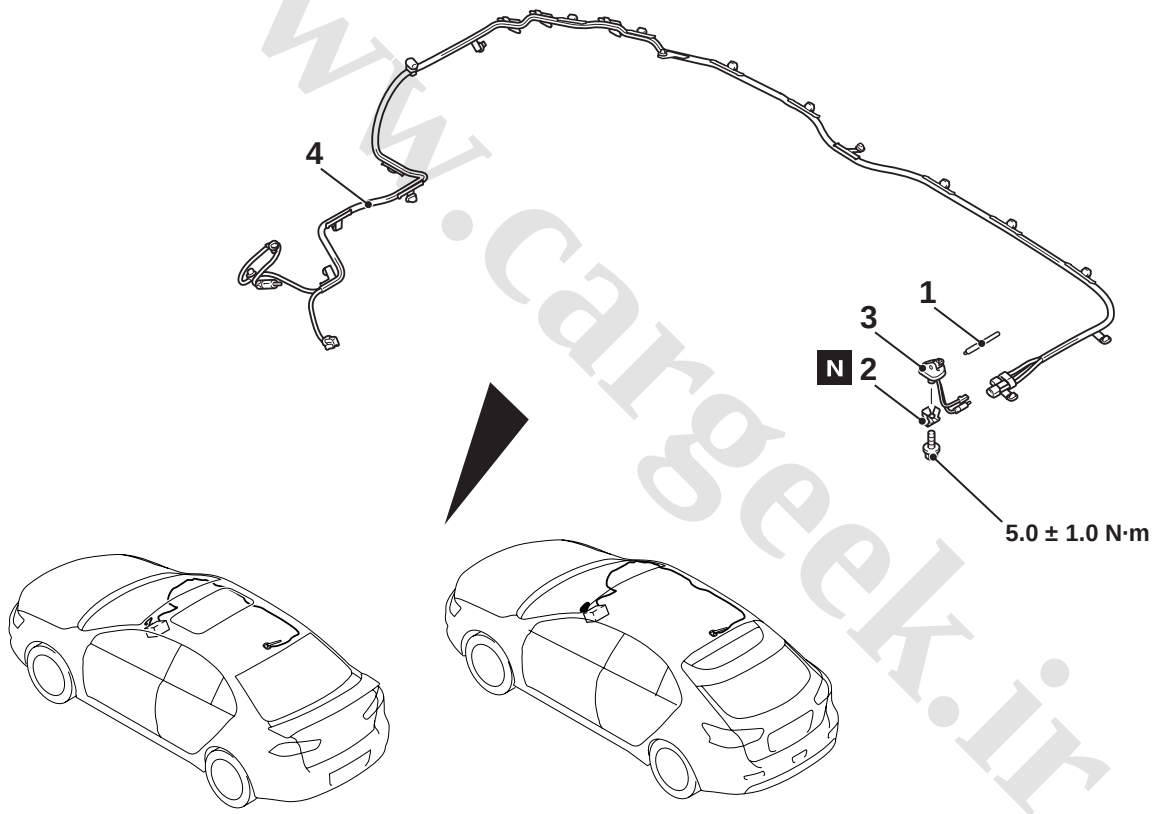

Removal Steps

1. Antenna rod
2. Antenna base (antenna spring)

Removal Steps (Continued)

3. Antenna base
4. Antenna feeder

www.cargeek.ir

www.CarGeek.ir

<RHD>

Pre-removal operation <Only Antenna base and Antenna feeder>	Post-installation operation <Only Antenna base and Antenna feeder>
• Removal of headlining (Refer to GROUP 52A – Headlining). • Removal of radio and CD player or multivision display (Refer to <vehicles with radio and CD player> or <vehicles with MMCS>). • Removal of instrument panel (Refer to GROUP 52A – Instrument panel assembly).	• Installation of instrument panel (Refer to GROUP 52A – Instrument panel assembly). • Installation of radio and CD player or multivision display (Refer to <vehicles with radio and CD player> or <vehicles with MMCS>). • Installation of headlining (Refer to GROUP 52A – Headlining).

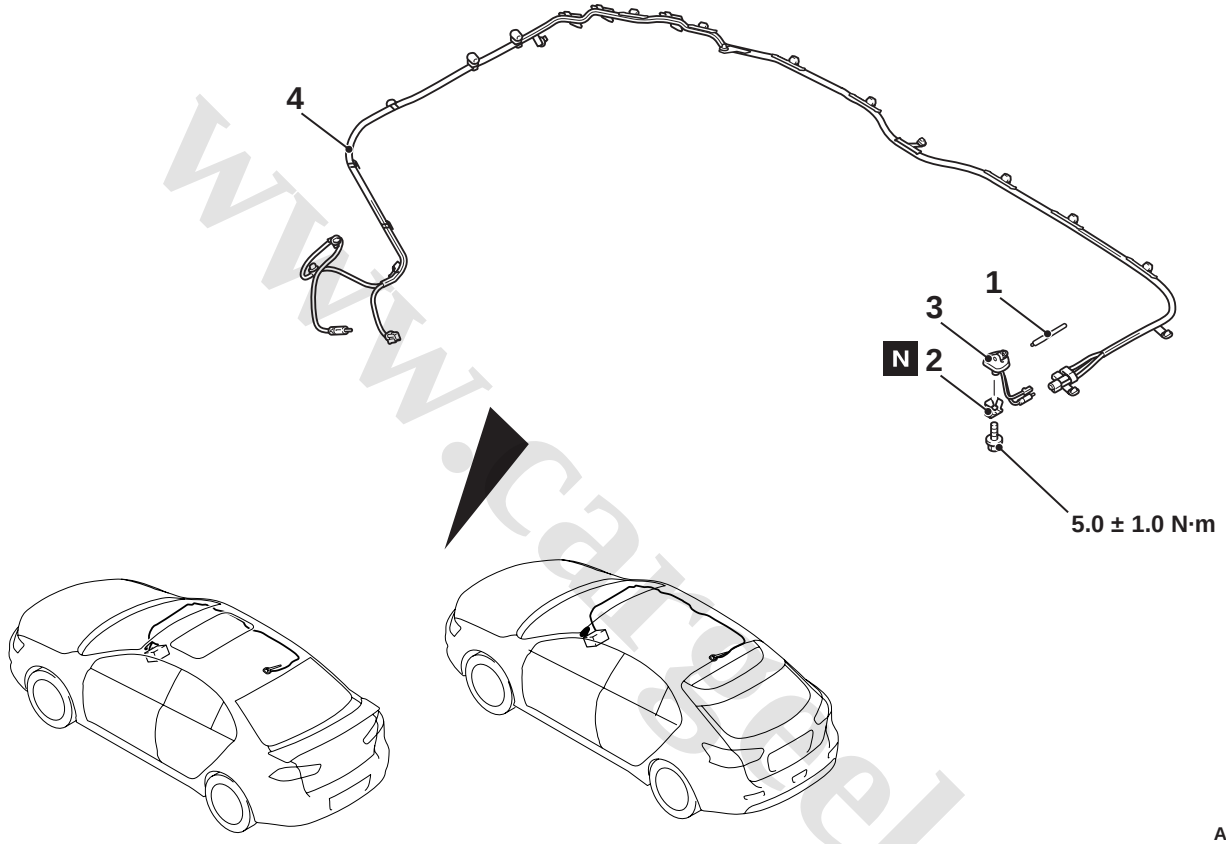

Removal Steps

1. Antenna rod
2. Antenna base (antenna spring)

Removal Steps (Continued)

3. Antenna base
4. Antenna feeder

www.cargeek.ir

www.CarGeek.ir

DC/DC CONVERTER <VEHICLES WITH AUTO STOP & GO (AS&G) SYSTEM>

SPECIAL TOOL(S)

M1549700100015

www.cargeek.ir

www.cargeek.ir

www.CarGeek.ir

Tool	Number	Name	Use
a 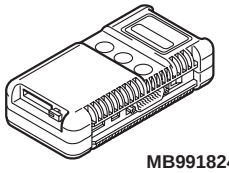 MB991824 b 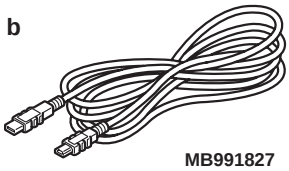 MB991827 c 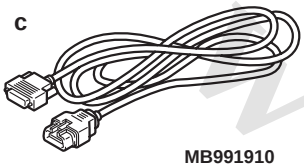 MB991910 d 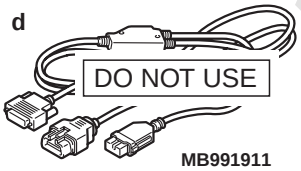 DO NOT USE MB991911 e 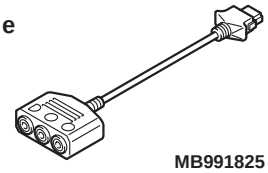 MB991825 f 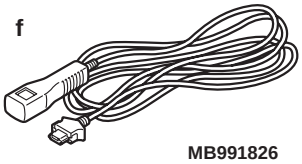 MB991826 MB991955	MB991955 a. MB991824 b. MB991827 c. MB991910 d. MB991911 e. MB991825 f. MB991826	M.U.T.-III sub-assembly a. Vehicle Communication Interface (V.C.I.) b. M.U.T.-III USB cable c. M.U.T.-III main harness A (Vehicles with CAN communication system) d. M.U.T.-III main harness B (Vehicles without CAN communication system) e. M.U.T.-III measure adapter f. M.U.T.-III trigger harness	⚠ CAUTION **For vehicles with CAN communication, use M.U.T.-III main harness A to send simulated vehicle speed. If you connect M.U.T.-III main harness B instead, the CAN communication does not function correctly.** CAN bus diagnostics, diagnosis code or service data check.
a 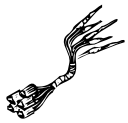 b 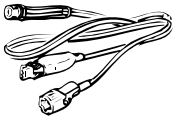 c 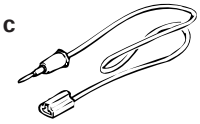 d DO NOT USE MB991223	MB991223 a. MB991219 b. MB991220 c. MB991221 d. MB991222	Harness set a. Check harness b. LED harness c. LED harness adapter d. Probe	Continuity check and voltage measurement at harness wire or connector a. For checking connector pin contact pressure b. For checking power supply circuit c. For checking power supply circuit d. For connecting a locally sourced tester

www.cargeek.ir

www.CarGeek.ir

Tool	Number	Name	Use
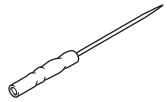 MB992006	MB992006	Extra fine probe	Continuity check and voltage measurement at harness wire or connector

TROUBLESHOOTING

STANDARD FLOW OF DIAGNOSTIC TROUBLESHOOTING

M1549700300019

Refer to GROUP 00 – Contents of troubleshooting .

TROUBLE SYMPTOM CHART

M1549700400016

Inspection Procedure No.	Trouble symptom	Reference page
1	Check the DC/DC converter power supply circuit.	
2	Audio equipment is reset or sound jump occurs at auto start.	

SYMPTOM PROCEDURES

Inspection Procedure 1: Check the DC/DC converter power supply circuit.

⚠ CAUTION

Even when the diagnosis code No. B1301 or B1302 is set in the AS&G-ECU, do not conclude as a DC/DC converter or AS&G-ECU error, and be sure to check the DC/DC converter power supply circuit.

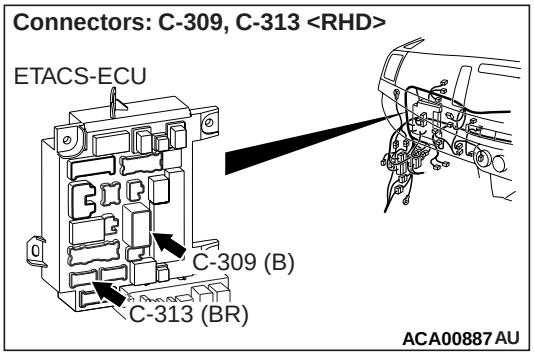

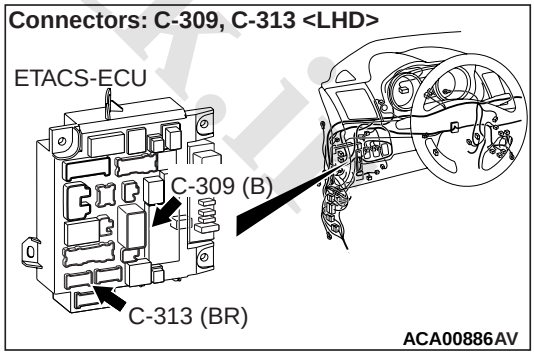

www.cargeek.ir

www.CarGeek.ir

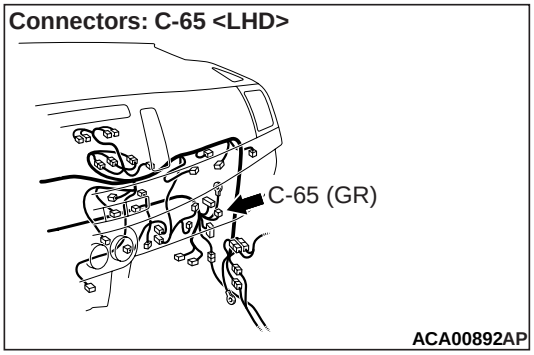

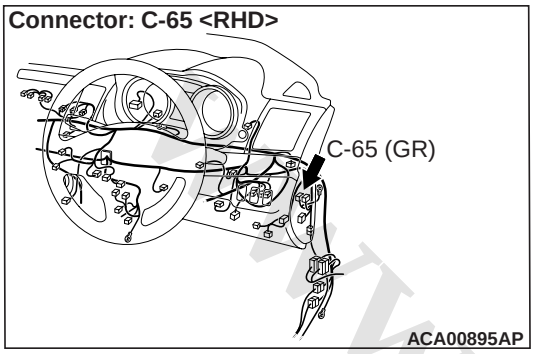

CIRCUIT OPERATION

- The power supply to the DC/DC converter is provided by the fusible link (36) <Petrol> or (38) <Diesel>.
- The ACC signal is received C-65 DC/DC converter connector terminal No.6 from C-313 ETACS-ECU connector terminal No.9.

PROBABLE CAUSES

- The DC/DC converter connector may be defective.
- The battery may be defective.
- Damaged harness wires and connectors

DIAGNOSIS PROCEDURE

STEP 1. Battery test

Check the battery state. (Refer to .)

Q: Is the check result normal?

YES : Go to Step 2.
NO : Replace the battery.

STEP 2. M.U.T.-III ETACS system data list

Check the input signal of ACC relay.

- Turn the ignition switch to the ACC position.

Item No.	Item name	Normal condition
Item 288	ACC switch	ON

OK: Normal condition is displayed.

Q: Is the check result normal?

YES : Go to Step 3.
NO : Refer to ETACS – Input Signal Procedure 1 "The ignition switch (ACC) signal is not sent to the ETACS-ECU" .

STEP 3. Connector check: C-65 DC/DC converter connector and C-313 ETACS-ECU connector

Q: Is the check result normal?

YES : Go to Step 4.
NO : Repair the defective connector.

STEP 4. Voltage measurement at C-65 DC/DC converter connector.

(1) Disconnect C-65 DC/DC converter connector, and measure at the wiring harness side.
(2) Turn the ignition switch to "ACC" position.
(3) Measure the voltage between terminal No.6 and body earth.

OK: System voltage

Q: Is the check result normal?

YES : Go to Step 5.
NO : Go to Step 6.

STEP 5. Check the harness wire between C-313 ETACS connector terminal No.1 and C-65 DC/DC converter connector terminal No.6.

- Check the signal line for open circuit and short circuit.

NOTE: Prior to the wiring harness inspection, check C-31 intermediate connector, and repair if necessary.

Q: Is the check result normal?

YES : The trouble can be an intermittent malfunction (Refer to GROUP 00, How to use Troubleshooting/inspection Service Points, How to Cope with Intermittent Malfunction).
NO : Repair the wiring harness.

STEP 6. Voltage measurement at C-65 DC/DC converter connector.

(1) Disconnect C-65 DC/DC converter connector, and measure at the wiring harness side.
(2) Measure the voltage between terminal No.9 and body earth.

OK: System voltage

Q: Is the check result normal?

YES : Go to Step 8.
NO : Go to Step 7.

www.cargeek.ir

www.CarGeek.ir

STEP 7. Check the wiring harness between C-65 DC/DC converter connector terminal No.9 and fusible link (36) <Petrol> or (38) <Diesel>.

- Check the power supply line for open circuit and short circuit.

Q: Is the check result normal?

YES : The trouble can be an intermittent malfunction (Refer to GROUP 00, How to use Troubleshooting/inspection Service Points, How to Cope with Intermittent Malfunction).

NO : Repair the wiring harness.

STEP 8. Resistance measurement at C-65 DC/DC converter connector.

(1) Disconnect the connector, and measure at the wiring harness side.

(2) Check the continuity between terminal No.10 and earth.

OK: Continuity exists (2 Ω or less)

Q: Is the check result normal?

YES : No action is necessary and testing is complete.

NO : Go to Step 9.

STEP 9. Check the wiring harness between C-65 DC/DC converter connector terminal No.10 and body earth.

- Check the body earth wires for open circuit.

Q: Is the check result normal?

YES : The trouble can be an intermittent malfunction (Refer to GROUP 00 – How to use Troubleshooting/inspection Service Points – How to Cope with Intermittent Malfunction).

NO : Repair the wiring harness.

Inspection Procedure 2: Audio equipment is reset or sound jump occurs at auto start.

⚠ CAUTION

Even when the diagnosis code No. B1301 or B1302 is set in the AS&G-ECU, do not conclude as a DC/DC converter or AS&G-ECU error, and be sure to check the DC/DC converter power supply circuit.

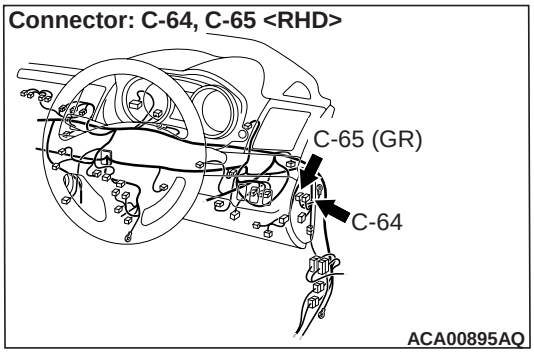

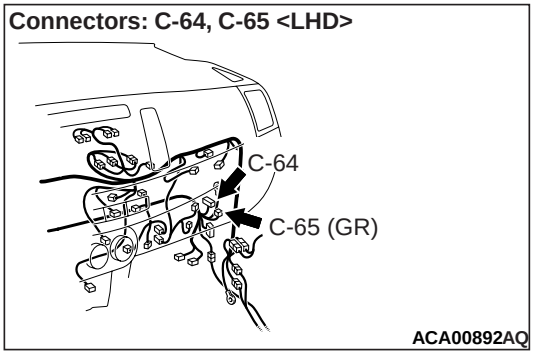

COMMENTS ON TROUBLE SYMPTOM

If a reset or sound jump occurs with the AUDIO equipment at the auto start, the following causes can be suspected.

- Diagnosis code No. B1301 or B1302 is stored in AS&G-ECU, and voltage is not boosted by DC/DC converter at auto start
- DC/DC converter internal malfunction
- Battery voltage drop
- Communication error with AS&G-ECU and DC/DC converter
- AS&G-ECU malfunction

NOTE: If a reset or sound jump occurs with AUDIO equipment at other than the auto start, a problem is present with the power supply to the equipment that experienced the reset or sound jump. Therefore, be sure to check the power supply to the equipment.

PROBABLE CAUSES

- The DC/DC converter may be defective.
- The AS&G-ECU may be defective.
- The battery may be defective.
- Damaged harness wires and connectors

DIAGNOSIS PROCEDURE

STEP 1. Check the power supply system circuit

Check the DC/DC converter power supply circuit by referring to Troubleshooting. (Refer to .)

Q: Is the check result normal?

www.cargeek.ir

www.CarGeek.ir

YES : Go to Step 2.
NO : Repair according to the troubleshooting, and recheck the trouble symptom.

STEP 2. Check the M.U.T.-III Diagnosis code for other systems
Check if the diagnosis code No. B1301 or B1302 is set to AS&G-ECU.

Q: Is the diagnosis code set?
YES : Erase the diagnosis code, and then go to Step 3.
NO : Go to Step 3.

STEP 3. Check the M.U.T.-III Diagnosis code for other systems
Check if the diagnosis code is set to AS&G-ECU.

Q: Is the diagnosis code set?
YES : Diagnose the AS&G-ECU (Refer to GROUP 17 – Troubleshooting).
NO : Go to Step 4.

STEP 4. Battery test
Check the battery state.(Refer to .)

Q: Is the check result normal?
YES<Except vehicles with MMCS> : Go to Step 7.
YES<Vehicles with MMCS> : Go to Step 5.
NO : Replace the battery

STEP 5. Connector check: C-128 intermediate connector

Q: Is the check result normal?
YES : Go to Step 6.
NO : Repair the defective connector.

STEP 6. Check the wiring harness between C-65 DC/DC converter connector terminal No.8 and C-128 intermediate connector terminal No.1.
- Check the signal lines for open circuit and short circuit.

Q: Is the check result normal?
YES : Go to Step 7.
NO : Repair the wiring harness.

STEP 7. Replace the DC/DC converter temporarily, and check the trouble symptom.

Q: Is the check result normal?
YES : Replace the DC/DC converter.
NO : Replace the AS&G-ECU.

DC/DC CONVERTER REMOVAL AND INSTALLATION

M1549700700028

Pre-removal operation	Post-installation operation
• Removal of instrument panel lower (Refer to GROUP 52A - Instrument Lower Panel) <RHD> • Removal of glove box (Refer to GROUP 52A - Glove Box) <LHD>	• Installation of instrument panel lower (Refer to GROUP 52A - Instrument Lower Panel) <RHD> • Installation of glove box (Refer to GROUP 52A - Glove Box) <LHD>

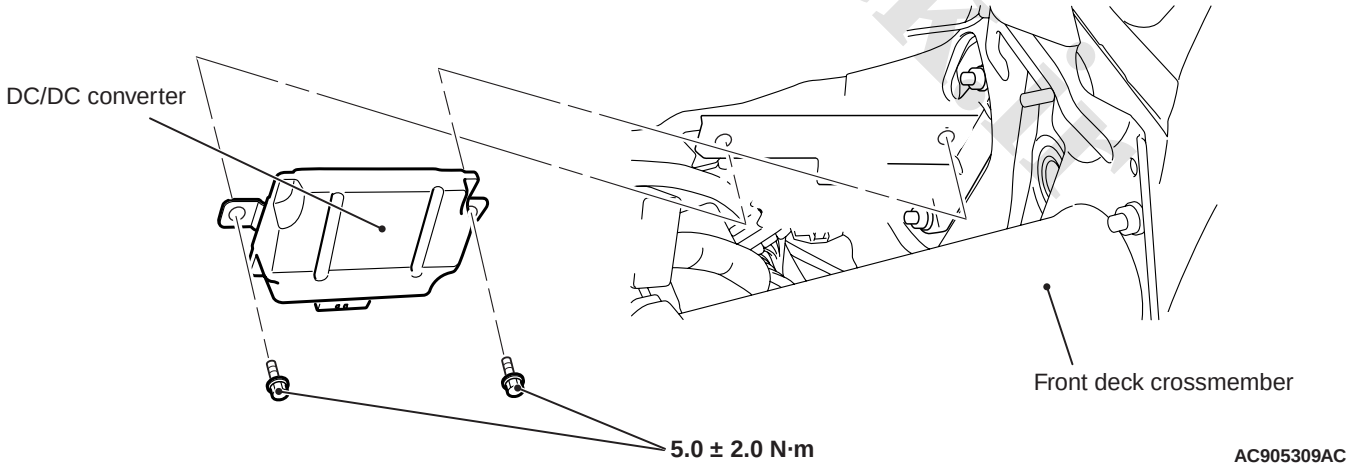

INSPECTION

DC/DC CONVERTER INSPECTION

M1549700900011

1. Remove the DC/DC converter. (Refer to)
2. Check that the continuity exists

www.cargeek.ir

www.CarGeek.ir

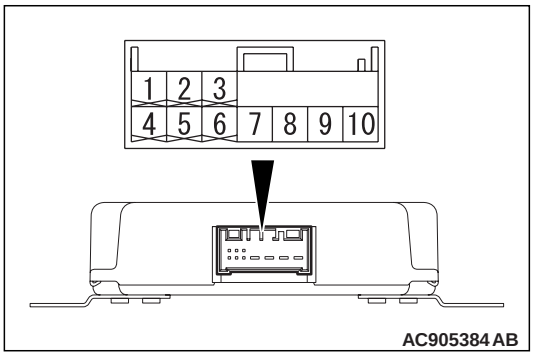

Tester connection	Measurement value
9 – 7	Continuity exists (2 Ω or less)

www.cargeek.ir

www.cargeek.ir

www.CarGeek.ir

DEFOGGER

SPECIAL TOOLS

M1547000600350

www.cargeek.ir

www.cargeek.ir

www.CarGeek.ir

Tool	Number	Name	Use
a 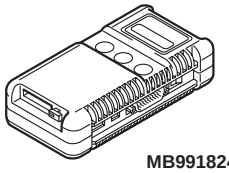 MB991824 b 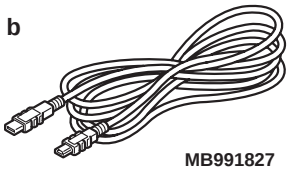 MB991827 c 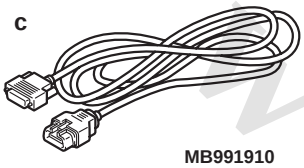 MB991910 d 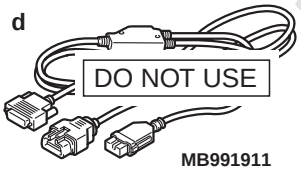 DO NOT USE MB991911 e 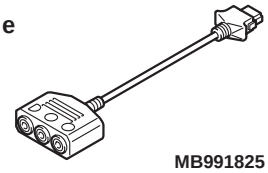 MB991825 f 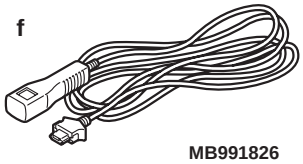 MB991826 MB991955	MB991955 a. MB991824 b. MB991827 c. MB991910 d. MB991911 e. MB991825 f. MB991826	M.U.T.-III sub-assembly a. Vehicle Communication Interface (V.C.I.) b. M.U.T.-III USB cable c. M.U.T.-III main harness A (Vehicles with CAN communication system) d. M.U.T.-III main harness B (Vehicles without CAN communication system) e. M.U.T.-III measure adapter f. M.U.T.-III trigger harness	⚠ CAUTION **For vehicles with CAN communication, use M.U.T.-III main harness A to send simulated vehicle speed. If you connect M.U.T.-III main harness B instead, the CAN communication does not function correctly.** Diagnosis code, service data and actuator test check.
a 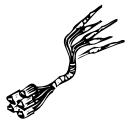 b 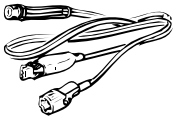 c 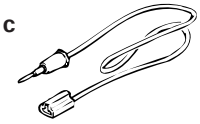 d DO NOT USE MB991223	MB991223 a. MB991219 b. MB991220 c. MB991221 d. MB991222	Wiring harness set a. Check harness b. LED harness c. LED harness adapter d. Probe	Continuity check and voltage measurement at wiring harness or connector a. For checking connector pin contact pressure b. For checking power supply circuit c. For checking power supply circuit d. For connecting a locally sourced tester

www.cargeek.ir

www.CarGeek.ir

Tool	Number	Name	Use
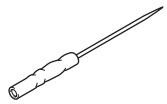 MB992006	MB992006	Extra fine probe	Continuity check and voltage measurement at wiring harness or connector

TROUBLESHOOTING

STANDARD FLOW OF DIAGNOSTIC TROUBLESHOOTING

M1540500700038

Refer to GROUP 00 – Contents of Troubleshooting .

TROUBLE SYMPTOM CHART

M1540500800035

Trouble symptom	Reference page
The rear window defogger does not work.	

www.cargeek.ir

www.cargeek.ir

www.CarGeek.ir

SYMPTOM PROCEDURES

The rear window defogger does not work.

www.cargeek.ir

www.cargeek.ir

www.CarGeek.ir

Rear Window Defogger Circuit

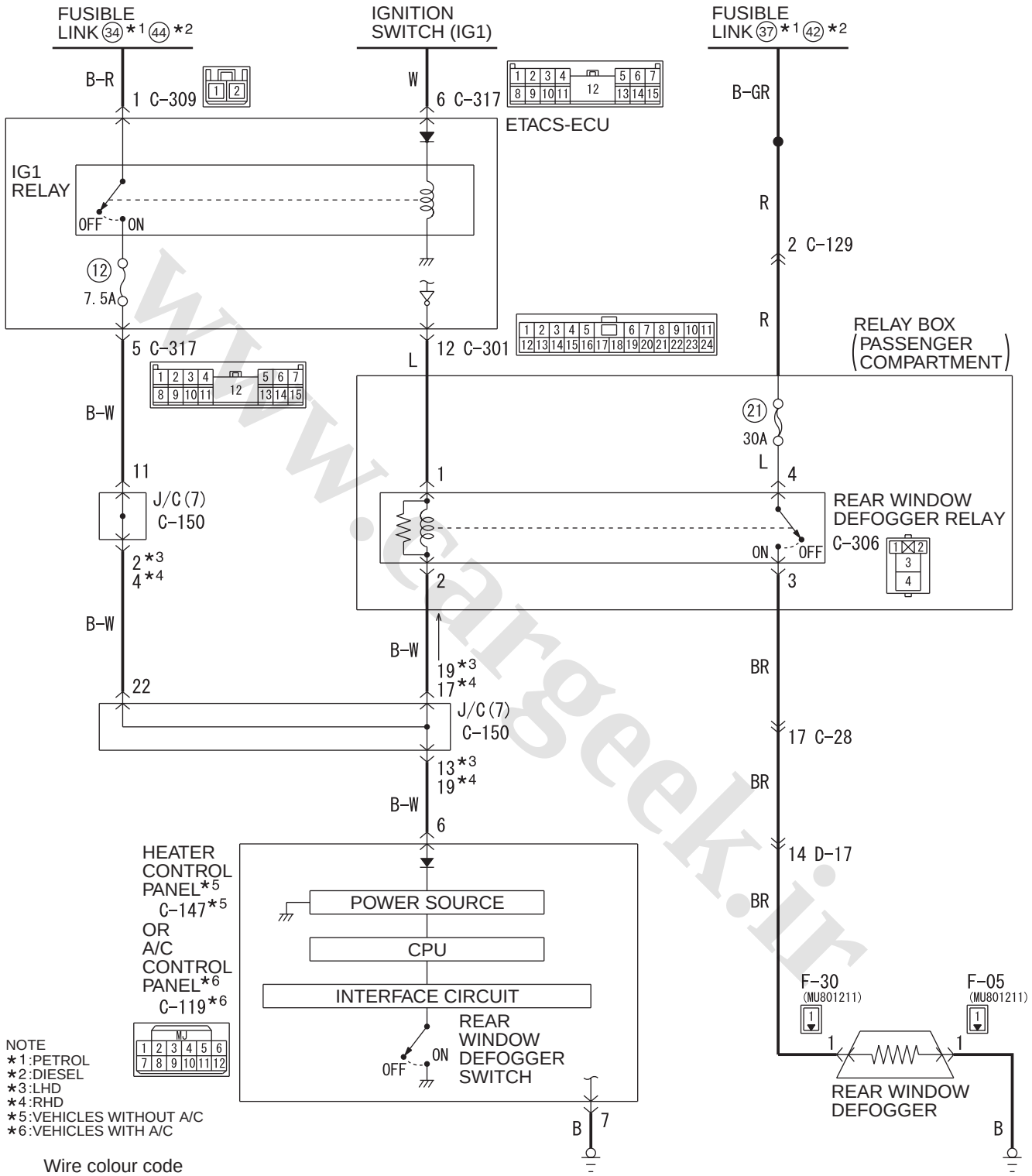

Wire colour code
B : Black LG : Light green G : Green L : Blue W : White Y : Yellow SB : Sky blue
BR : Brown O : Orange GR : Grey R : Red P : Pink V : Violet PU : Purple SI : Silver

www.cargeek.ir

www.CarGeek.ir

A/C Control Panel Circuit

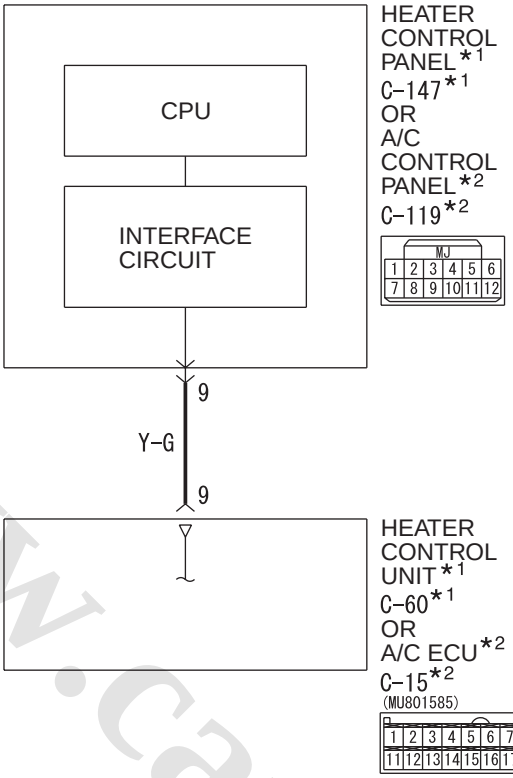

NOTE
*1:VEHICLES WITHOUT A/C
*2:VEHICLES WITH A/C

Wire colour code
B : Black LG : Light green G : Green L : Blue W : White Y : Yellow SB : Sky blue
BR : Brown O : Orange GR : Grey R : Red P : Pink V : Violet PU : Purple SI : Silver

WBH54E014A

Connectors: C-15, C-60, C-119, C-147 <LHD>

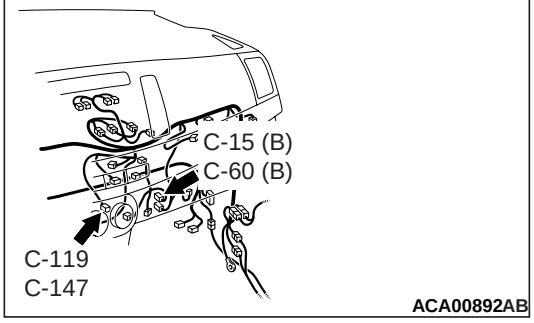

Connector: C-119 <RHD>

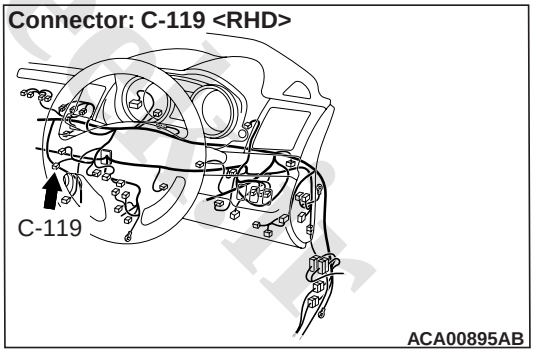

Connector: C-15 <RHD>

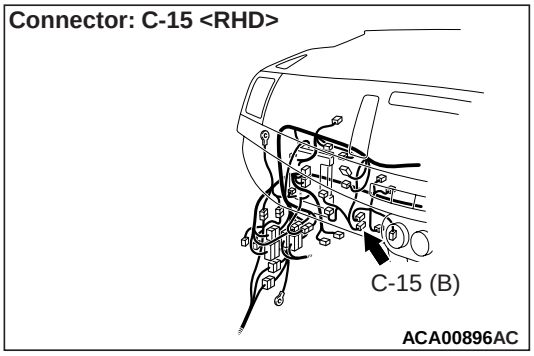

Connectors: C-301, C-306 <LHD>

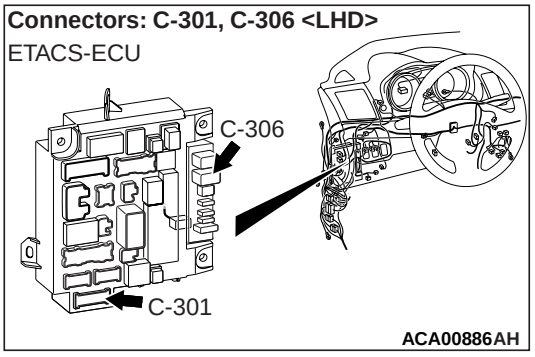

www.cargeek.ir

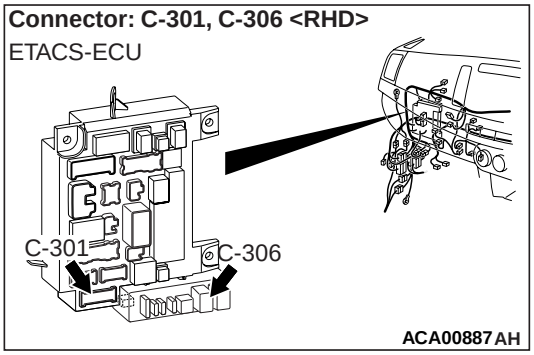

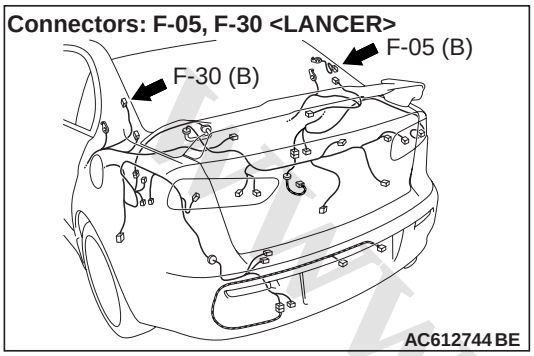

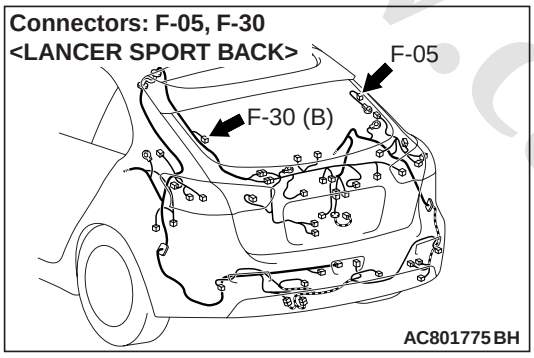

COMMENTS ON TROUBLE SYMPTOM

If the rear window defogger does not work after switching on (the defogger timer will be on for approximately 20 minutes), the rear window defogger relay circuit may be defective.

NOTE: When the engine is not running, the rear window defogger does not work.

PROBABLE CAUSES

- Malfunction of the rear window defogger relay
- Wiring harness or connector failure
- Malfunction of heater control panel <vehicles without A/C> or A/C control panel <vehicles with A/C>
- Malfunction of heater control unit <vehicles without A/C> or A/C-ECU <vehicles with A/C>
- Malfunction of ETACS-ECU

DIAGNOSIS PROCEDURE

STEP 1. M.U.T.-III CAN bus diagnostics

Use M.U.T.-III to diagnose the CAN bus lines.

Q: Is the check result normal?

YES : Go to Step 2.

NO : Repair the CAN bus line (Refer to GROUP 54C – Troubleshooting).

STEP 2. Check that the inside air/outside air recirculation can be switched.

Check that the inside air/outside air recirculation can be switched normally.

Q: Is the check result normal?

YES : Go to Step 3.

NO : Refer to GROUP 55A– trouble symptom chart .

STEP 3. M.U.T.-III diagnosis code

Check that the air conditioner has not set a diagnosis code.

Q: Is the diagnosis code set?

YES : Carry out the diagnosis code procedures. (Refer to GROUP 55A-trouble shooting .)

NO : Go to Step 4.

STEP 4. M.U.T.-III other system's diagnosis code

Check that the ETACS-ECU has not set a diagnosis code.

Q: Is the diagnosis code set?

YES : Carry out the diagnosis code procedures. Refer to .

NO : Go to Step 5.

STEP 5. M.U.T.-III data list

Check the rear window defogger switch signal by the data list of the A/C-ECU <vehicles with A/C> or heater control unit <vehicles without A/C>.

- Start the engine.
- Turn the rear window defogger switch from off to on.

Item No.	Item name	Normal condition
Item 60	Rear defogger switch	OFF → ON

Q: Is the check result normal?

YES : Go to Step 6.

NO : Replace the heater control panel <vehicles without A/C> or A/C control panel <vehicles with A/C>.

www.cargeek.ir

www.CarGeek.ir

STEP 6. Connector check: C-306 rear window defogger relay connector

Q: Is the check result normal?
YES : Go to Step 7.
NO : Repair the connector concerned.

STEP 7. Check the rear window defogger relay.
Refer to .

Q: Is the check result normal?
YES : Go to Step 8.
NO : Replace the defogger relay.

STEP 8. Connector check: F-30 rear window defogger connector

Q: Is the check result normal?
YES : Go to Step 9.
NO : Repair the connector concerned.

STEP 9. Measure the voltage at F-30 rear window defogger connector.
(1) Disconnect the connector, and measure at the wiring harness side.
(2) Ignition switch: ON
(3) Rear window defogger switch: ON (measure within 20 seconds after the switch is turned on)
(4) Measure the voltage between terminal 1 and body earth

OK: System voltage

Q: Is the check result normal?
YES : Go to Step 10.
NO : Go to Step 11.

STEP 10. Measure the resistance at F-05 rear window defogger connector.
(1) Disconnect the connector, and measure at the wiring harness side.
(2) Measure the resistance between terminal 1 and body earth

OK: Continuity exists (2 Ω or less)

Q: Is the check result normal?
YES : Go to Step 19.
NO : Repair the wiring harness wires between F-05 rear window defogger connector terminal No. 1 and body earth.

STEP 11. Measure the voltage at C-306 rear window defogger relay connector.
(1) Remove the relay, and measure at the junction block side.
(2) Measure the voltage between terminal 4 and body earth

OK: System voltage

Q: Is the check result normal?
YES : Go to Step 13.
NO : Go to Step 12.

STEP 12. Check the wiring harness between C-306 rear window defogger relay connector terminal No. 4 and fusible link (37) <PETROL> or (42) <DIESEL>.
- Check the power supply line for open circuit and short circuit.

NOTE: Prior to the wiring harness inspection, check intermediate connector C-129, and repair if necessary.

Q: Is the check result normal?
YES : Intermittent malfunction (Refer to GROUP 00 – How to Use Troubleshooting/ Inspection Service Points - How to Cope with Intermittent Malfunction).
NO : Repair the wiring harness.

STEP 13. Measure the voltage at C-306 rear window defogger relay connector.
(1) Remove the relay, and measure at the junction block side.
(2) Ignition switch: ON
(3) Measure the voltage between terminal 2 and body earth

OK: System voltage

Q: Is the check result normal?
YES : Go to Step 14.
NO : Go to Step 16.

STEP 14. Connector check: C-301 ETACS-ECU connector

Q: Is the check result normal?
YES : Go to Step 15.
NO : Repair the connector.

STEP 15. Check the wiring harness between C-306 rear window defogger relay connector terminal No. 1 and C-301 ETACS-ECU connector terminal No. 12.
- Check the signal line for open circuit and short circuit.

Q: Is the check result normal?
YES : Go to Step 18.
NO : Repair the wiring harness.

www.cargeek.ir

STEP 16. Connector check: C-147 heater control panel connector <vehicles without A/C> or C-119 A/C control panel connector <vehicles with A/C>

Q: Is the check result normal?
YES : Go to Step 17.
NO : Repair the connector.

STEP 17. Check the wiring harness wires between C-306 rear window defogger relay connector terminal No. 2 and fusible link (34) <PETROL> or (44) <DIESEL>.

- Check the input line for open or short circuit.

NOTE: Prior to the wiring harness inspection, check joint connector C-150, and repair if necessary.

Q: Is the check result normal?
YES : Intermittent malfunction (Refer to GROUP 00 – How to Use Troubleshooting/ Inspection Service Points - How to Cope with Intermittent Malfunction).
NO : Repair the wiring harness.

STEP 18. Check the wiring harness wires between C-306 rear window defogger relay terminal No. 3 and F-30 rear window defogger connector terminal No. 1.

- Check the input line for open circuit.

NOTE: Prior to the wiring harness inspection, check intermediate connectors C-28 and D-17, and repair if necessary.

Q: Is the check result normal?
YES : Replace the ETACS-ECU.
NO : Repair the wiring harness.

STEP 19. Connector check: C-60 heater control unit connector <vehicles without A/C> or C-15 A/C-ECU connector <vehicles with A/C>

Q: Is the check result normal?
YES : Go to Step 20.
NO : Repair the connector.

STEP 20. Check the wiring harness between C-147 heater control panel connector <vehicles without A/C> or C-119 A/C control panel connector <vehicles with A/C> (terminals 9) and C-60 heater control unit connector <vehicles without A/C> or C-15 A/C-ECU connector <vehicles with A/C> (terminals 9).

- Check the A/C control panel signal line and earth line for open or short circuit.

Q: Is the check result normal?
YES : Go to Step 21.
NO : Repair the wiring harness.

STEP 21. Check the rear window defogger.
Check the rear window defogger (Refer to).

Q: Is the check result normal?
YES : Return to Step 1.
NO : Replace the rear window glass.

REMOVAL AND INSTALLATION

M1540600200201

Refer to GROUP 55A – Heater control unit .

ON-VEHICLE SERVICE

PRINTED HEATER CHECK

M1540500500421

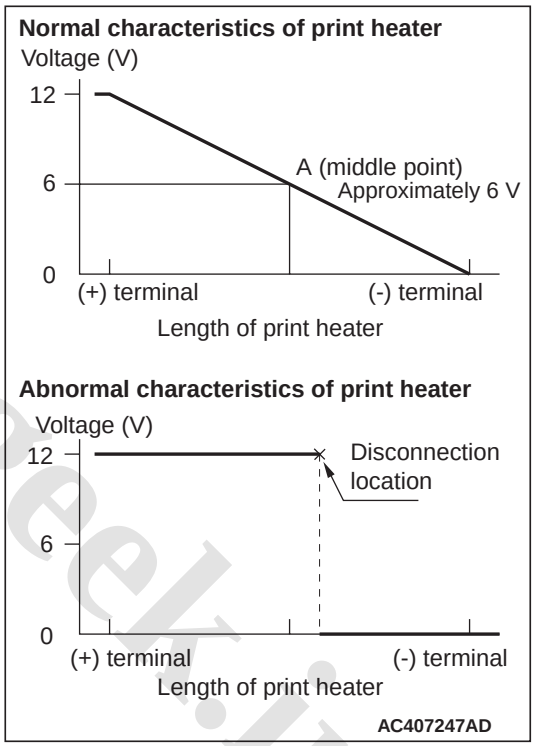

1. Let the engine run (2,000 r/min), and check the printed heater with the battery fully charged.
2. With the rear window defogger switch "ON," use the circuit tester to measure the voltage of each printed heater at the rear window glass centre A point. If approximately 6 V is indicated, it is judged good.
3. If the voltage of 12 V is indicated at the A point, there is an open circuit between the A point and negative terminal. Therefore, by moving the test bar slowly to the negative side, search and determine the location where the voltage changes suddenly (0 V). The location of voltage change indicates the open circuit position.

www.cargeek.ir

www.CarGeek.ir

4. Also, if the voltage indicates 0 V at the A point, there is an open circuit between the A point and positive terminal. Therefore, search and determine the location of voltage change (12 V) using the above mentioned method.
5. If a malfunction such as open circuit occurs, replace the rear window glass <LANCER> or tailgate window glass <LANCER SPORT BACK>.(Refer to GROUP 42A – Rear window glass <LANCER> or Tailgate window glass <LANCER SPORT BACK>.)

REAR WINDOW DEFOGGER RELAY CHECK

M1540500600279

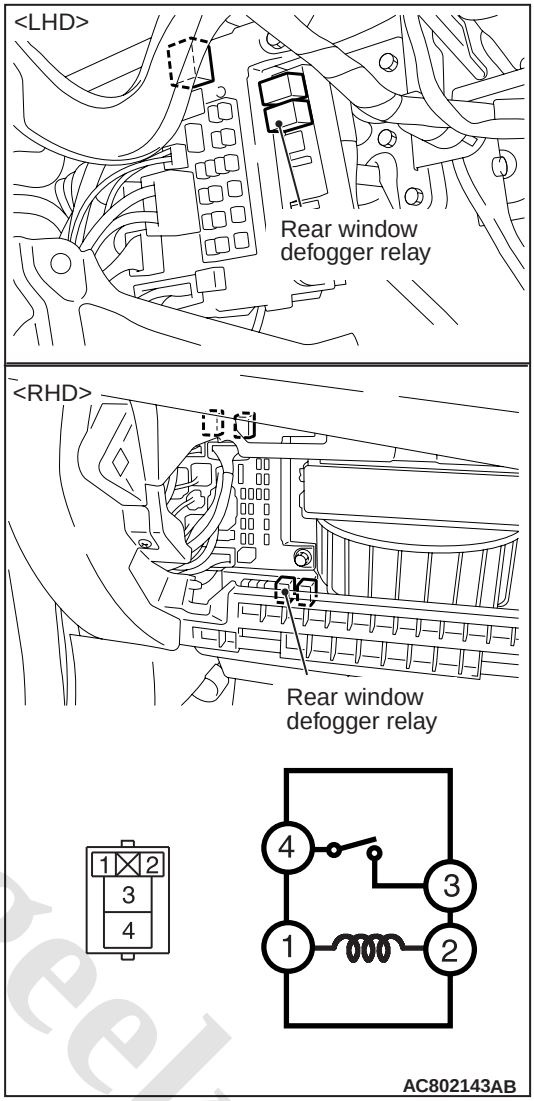

Battery voltage	Terminal number	Normal condition
At no energisation	4 – 3	No continuity
With current supply [terminal 1 (+), terminal 2 (–)]		Continuity exists (2 Ω or less)

www.cargeek.ir
www.cargeek.ir

www.CarGeek.ir

ETACS

SPECIAL TOOLS

M1545000600172

www.cargeek.ir

www.cargeek.ir

www.CarGeek.ir

Tool	Number	Name	Use
a 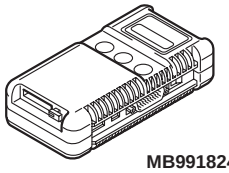 MB991824 b 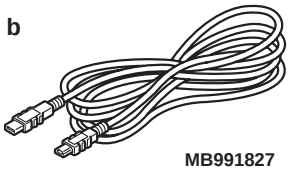 MB991827 c 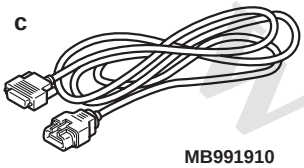 MB991910 d 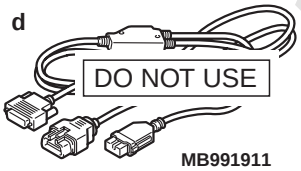 MB991911 e 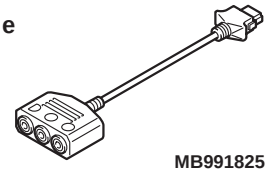 MB991825 f 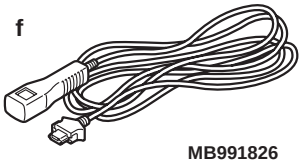 MB991826 MB991955	MB991955 a. MB991824 b. MB991827 c. MB991910 d. MB991911 e. MB991825 f. MB991826	M.U.T.-III sub-assembly a. Vehicle Communication Interface (V.C.I.) b. M.U.T.-III USB cable c. M.U.T.-III main harness A (Vehicles with CAN communication system) d. M.U.T.-III main harness B (Vehicles without CAN communication system) e. M.U.T.-III measure adapter f. M.U.T.-III trigger harness	⚠ CAUTION **For vehicles with CAN communication, use M.U.T.-III main harness A to send simulated vehicle speed. If you connect M.U.T.-III main harness B instead, the CAN communication does not function correctly.** ETACS-ECU check (Diagnosis code, service data)

www.cargeek.ir
www.cargeek.ir

www.CarGeek.ir

Tool	Number	Name	Use
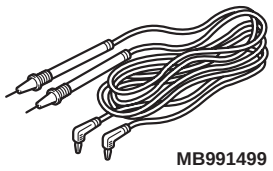 MB991499	MB991499	Measurement probe	Measurements of voltage and resistance value *NOTE: M.U.T.-II attached probe (Commercial probes can also be used.)*
a 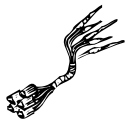 b 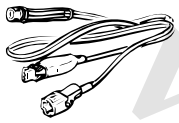 c 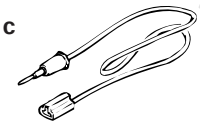 d DO NOT USE MB991223	MB991223 a. MB991219 b. MB991220 c. MB991221 d. MB991222	Harness set a. Check harness b. LED harness c. LED harness adapter d. Probe	Continuity check and voltage measurement at harness wire or connector a. For checking connector pin contact pressure b. For checking power supply circuit c. For checking power supply circuit d. For connecting a locally sourced tester
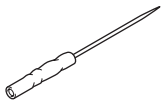 MB992006	MB992006	Extra fine probe	Continuity check and voltage measurement at harness wire or connector

TROUBLESHOOTING

STANDARD FLOW OF DIAGNOSTIC TROUBLESHOOTING

M1545000900139

Refer to GROUP 00 – Contents of troubleshooting .

DIAGNOSIS FUNCTION

M1545001000203

HOW TO READ DIAGNOSIS CODE

Refer to GROUP 00 – Diagnosis function .

HOW TO ERASE DIAGNOSIS CODE

Refer to GROUP 00 – Diagnosis function .

CHECK OF FREEZE FRAME DATA

The freeze frame data can be checked by using the M.U.T.-III.

When detecting fault and storing the diagnosis code, the ECU connected to CAN bus line obtains the data before the determination of the diagnosis code and the data when the diagnosis code is determined, and then stores the ECU status of that time. By analysing each data from M.U.T.-III, the troubleshooting can be performed more efficiently. The displayed items are as the table below.

www.cargeek.ir

www.CarGeek.ir

Display item list

Item No.	Item name	Data item	Unit
1	Odometer	Total driving distance after the diagnosis code is generated	km
2	Ignition cycle	Number of times the ignition switch is turned "ON" or "LOCK (OFF)" after the past failure transition	Number of counts is displayed.
3	Elapsed time after failure	Total elapsed time after a diagnosis code is generated	min*
4	Current trouble accumulative time	Cumulative time for current malfunction of diagnosis code	min

*NOTE: *: Total elapsed time can be stored up to 65,534 minutes (45.5 days). The display of M.U.T.-III is fixed to 65,534 minutes after 65,534 minutes have elapsed. Or, if the battery is disconnected, the total elapsed time cannot be measured properly. Thus, 65,535 minutes (null value) is displayed. Because it is calculated based on the ETACS-ECU information, the correct display may not be shown if the ETACS-ECU has had a timeout.*

DIAGNOSIS CODE CHART

M1545001101300

Diagnosis code No.	Diagnosis item	Reference page
U0001	Bus error (CAN-C)	
U0019	Bus off (CAN-B)	
U0100	Engine CAN timeout	
U0101	CVT/AT CAN timeout	
U0121	ABS/ASC CAN timeout	
U0126	Steering wheel sensor CAN timeout	
U0131	EPS CAN timeout	
U0151	SRS CAN timeout	
U0155	Meter CAN timeout	
U0164	A/C/Heater control unit CAN timeout	
U0168	KOS/WCM CAN timeout	
U0181	Headlamp automatic levelling-ECU CAN timeout	
U0184	Audio CAN timeout	
U0245	Audio visual navigation unit CAN timeout	
U0331*	ECU internal error	
U1004	AS&G CAN timeout	
U1005	Corner sensor/back sensor-ECU CAN timeout	
U1108	Additional CAN B ECU detected	
U1120	Bus line (CAN-C) low input	
U1121	Bus line (CAN-C) high input	

www.cargeek.ir

Diagnosis code No.	Diagnosis item	Reference page
U0169	Sunroof LIN timeout <Vehicles with sunroof>	Refer to GROUP 54B – Diagnosis code chart .
U0215	P/W SW (DR) LIN timeout	
U0231	Rain light sensor LIN timeout <Vehicles with auto lamp>	
U1006	Security alarm siren LIN timeout <Vehicles with security alarm sensor>	
U1007	Security alarm sensor LIN timeout <Vehicles with security alarm sensor>	
U1109	Column SW LIN timeout	
U150B	Column SW checksum error	
U150C	P/W SW (DR) checksum error	
U1511	Sunroof checksum error <Vehicles with sunroof>	
U1512	Rain light sensor checksum error <Vehicles with auto lamp>	
U1514	Bit error (LIN)	
U1515	No-Bus activity error (LIN)	
U1539	Security alarm siren LIN checksum error <Vehicles with security alarm sensor>	
U1540	Security alarm SNSR.LIN checksum error <Vehicles with security alarm sensor>	
B1034	Ambient air temperature sensor system (short circuit)	Refer to GROUP 55A – Diagnosis code chart .
B1035	Ambient air temperature sensor system (open circuit)	
B16A2	Blown turn-signal lamp (LH) bulb	
B16A3	Turn-signal lamp (LH) short circuit	
B16A4	Blown turn-signal lamp (RH) bulb	
B16A5	Turn-signal lamp (RH) short circuit	
B16A6	Hazard warning lamp blown fuse	
B16A7	Tail lamp (RH) circuit short <Short circuit in the position lamp (RH) circuit or the tail lamp (RH) circuit>	
B16A8	Tail lamp (LH) circuit short <Short circuit in the position lamp (LH) circuit, tail lamp (LH) circuit or the licence plate lamp circuit>	
B1761*	Chassis No. not programmed	
B210A	+B power supply (low input)	
B210B	+B power supply (high input)	
B2206*	Chassis No. mismatch	
B2215*	ECU internal error	
B222C*	Coding not completed	
B2350	Lighting switch malfunction	
B2351	Wiper switch malfunction	
B2353	Ignition power supply (low input)	
B2354	Ignition power supply (high input)	

www.cargeek.ir

www.CarGeek.ir

*NOTE: *: If diagnosis codes No. U0331, B1761, B2206, B2215, or B222C is set, there may be an error with the coding data stored in the ETACS-ECU.*

DIAGNOSIS CODE PROCEDURES

Code No.U0001 Bus error (CAN-C)
Code No.U0019 Bus off (CAN-B)

⚠ CAUTION
- **If the diagnosis code No. U0001 or U0019 is set to the ETACS-ECU, always diagnose the CAN bus line.**
- **Before replacing the ECU, ensure that the communication circuit is normal.**

TROUBLE JUDGMENT
When the ETACS-ECU is returned from the bus off state, or when the bus off error is indicated to the ETACS-ECU state, the diagnosis code No. U0001 (CAN-C) or U0019 (CAN-B) is stored.

COMMENTS ON TROUBLE SYMPTOM
The ETACS-ECU may have a malfunction, or the ETACS-ECU power supply or earth circuit may have a problem.

PROBABLE CAUSES
- Malfunction of the ETACS-ECU
- Malfunction of wiring harness or connector

DIAGNOSIS PROCEDURE

STEP 1. M.U.T.-III CAN bus diagnostics
Use the M.U.T.-III to diagnose the CAN bus lines.

Q: Is the check result normal?
YES : Go to Step 2.
NO : Repair the CAN bus line (Refer to GROUP 54C – Troubleshooting).

STEP 2. Check whether the diagnosis code is reset.
Check again if the diagnosis code is set to the ETACS-ECU.
(1) Erase the diagnosis code.
(2) Turn the ignition switch from "LOCK" (OFF) position to "ON" position.
(3) Check if diagnosis code is set.

Q: Is the diagnosis code set?
YES : Replace the ETACS-ECU.
NO : The trouble can be an intermittent malfunction (Refer to GROUP 00 – How to use Troubleshooting/inspection Service Points – How to Cope with Intermittent Malfunction).

Code No.U0100 Engine CAN timeout

⚠ CAUTION
- **If diagnosis code No. U0100 is set to the ETACS-ECU, always diagnose the CAN bus line.**
- **Before replacing the ECU, ensure that the communication circuit is normal.**

DIAGNOSTIC FUNCTION
If the signal from engine ECU cannot be received, the ETACS-ECU sets the diagnosis code No. U0100.

JUDGEMENT CRITERIA
After the following statuses continue to be true for 5 seconds, if the communication with the engine ECU cannot be established for 600 ms or more, the ETACS-ECU determines that a problem has occurred.
- No abnormality is present to the network.
- Ignition switch is in the ON position.
- No abnormality is present to the power supply fuse (IOD fuse), or the odometer value is at 80.5 km or more.
- ETACS-ECU system voltage is at 10–16 V.

PROBABLE CAUSES
- Malfunction of engine ECU

www.cargeek.ir

- Malfunction of the ETACS-ECU
- Malfunction of the CAN bus

DIAGNOSIS PROCEDURE

STEP 1. M.U.T.-III CAN bus diagnostics
Use the M.U.T.-III to diagnose the CAN bus lines.

Q: Is the check result normal?
YES : Go to Step 2.
NO : Repair the CAN bus line (Refer to GROUP 54C – Troubleshooting).

STEP 2. M.U.T.-III other system diagnosis code
Check if diagnosis code is set to the engine-ECU.

Q: Is the diagnosis code set?
YES : Troubleshoot the engine (Refer to GROUP 13A – Troubleshooting <1600> or GROUP 13B – Troubleshooting <1800-PETROL-DOHC, 2000> or GROUP 13C – Troubleshooting <DIESEL> or GROUP 13F – Troubleshooting <1800-SOHC>).
NO : Go to Step 3.

STEP 3. M.U.T.-III other system diagnosis code
Check if diagnosis code No. U0100 is set to the ASC-ECU.

Q: Is the diagnosis code set?
YES : Go to Step 4.
NO : Go to Step 5.

STEP 4. Check whether the diagnosis code is reset.
Check again if the diagnosis code is set to the ETACS-ECU.
(1) Erase the diagnosis code.
(2) Turn the ignition switch from "LOCK" (OFF) position to "ON" position.
(3) Check if diagnosis code is set.

Q: Is the diagnosis code set?
YES : Replace the engine ECU.
NO : The trouble can be an intermittent malfunction such as a poor connection or open circuit in the CAN bus lines between the engine ECU and the ETACS-ECU (GROUP 00 – How to use Troubleshooting/ inspection Service Points – How to Cope with Intermittent Malfunction).

STEP 5. Check whether the diagnosis code is reset.
Check again if the diagnosis code is set to the ETACS-ECU.
(1) Erase the diagnosis code.
(2) Turn the ignition switch from "LOCK" (OFF) position to "ON" position.
(3) Check if diagnosis code is set.

Q: Is the diagnosis code set?
YES : Replace the ETACS-ECU.
NO : The trouble can be an intermittent malfunction such as a poor connection or open circuit in the CAN bus lines between the engine ECU and the ETACS-ECU (GROUP 00 – How to use Troubleshooting/ inspection Service Points – How to Cope with Intermittent Malfunction).

Code No.U0101 CVT/AT CAN timeout

⚠ CAUTION
- **If diagnosis code No. U0101 is set to the ETACS-ECU, always diagnose the CAN bus line.**
- **Before replacing the ECU, ensure that the communication circuit is normal.**

DIAGNOSTIC FUNCTION
If the signal from CVT-ECU, A/T-ECU cannot be received, the ETACS-ECU sets the diagnosis code No. U0101.

JUDGEMENT CRITERIA
After the following statuses continue to be true for 5 seconds, if the communication with the CVT-ECU, A/T-ECU cannot be established for 600 ms or more, the ETACS-ECU determines that a problem has occurred.
- No abnormality is present to the network.
- Ignition switch is in the ON position.
- No abnormality is present to the power supply fuse (IOD fuse), or the odometer value is at 80.5 km or more.
- ETACS-ECU system voltage is at 10–16 V.

www.cargeek.ir

www.CarGeek.ir

PROBABLE CAUSES
- Malfunction of CVT-ECU
- Malfunction of A/T-ECU
- Malfunction of the ETACS-ECU
- Malfunction of the CAN bus

DIAGNOSIS PROCEDURE

STEP 1. M.U.T.-III CAN bus diagnostics
Use the M.U.T.-III to diagnose the CAN bus lines.

Q: Is the check result normal?
YES : Go to Step 2.
NO : Repair the CAN bus line (Refer to GROUP 54C – Troubleshooting).

STEP 2. M.U.T.-III other system diagnosis code
Check if diagnosis code is set to the CVT-ECU, A/T-ECU.

Q: Is the diagnosis code set to the any of the above?
Set to the CVT-ECU. : Troubleshoot the CVT. Refer to GROUP 23A – Diagnosis code chart .
Set to the A/T-ECU. : Troubleshoot the A/T. Refer to GROUP 23C – Diagnosis code chart .
The diagnosis code is not set. : Go to Step 3.

STEP 3. M.U.T.-III other system diagnosis code
Check if the diagnosis code No. U0101 is set to the engine-ECU.

Q: Is the diagnosis code set?
YES : Go to Step 4.
NO : Go to Step 5.

STEP 4. Check whether the diagnosis code is reset.
Check again if the diagnosis code is set to the ETACS-ECU.
(1) Erase the diagnosis code.
(2) Turn the ignition switch from "LOCK" (OFF) position to "ON" position.
(3) Check if diagnosis code is set.

Q: Is the diagnosis code set?
YES : Replace the CVT-ECU, A/T-ECU.
NO : The trouble can be an intermittent malfunction such as a poor connection or open circuit in the CAN bus lines between the CVT-ECU, A/T-ECU and the ETACS-ECU (GROUP 00 – How to use Troubleshooting/inspection Service Points – How to Cope with Intermittent Malfunction).

STEP 5. Check whether the diagnosis code is reset.
Check again if the diagnosis code is set to the ETACS-ECU.
(1) Erase the diagnosis code.
(2) Turn the ignition switch from "LOCK" (OFF) position to "ON" position.
(3) Check if diagnosis code is set.

Q: Is the diagnosis code set?
YES : Replace the ETACS-ECU.
NO : The trouble can be an intermittent malfunction such as a poor connection or open circuit in the CAN bus lines between the CVT-ECU, A/T-ECU and the ETACS-ECU (GROUP 00 – How to use Troubleshooting/inspection Service Points – How to Cope with Intermittent Malfunction).

Code No.U0121 ABS/ASC CAN timeout

⚠ CAUTION
- **If diagnosis code No. U0121 is set to the ETACS-ECU, always diagnose the CAN bus line.**
- **Before replacing the ECU, ensure that the communication circuit is normal.**

DIAGNOSTIC FUNCTION
If the signal from ABS-ECU or ASC-ECU cannot be received, the ETACS-ECU sets the diagnosis code No. U0121.

JUDGMENT CRITERIA
After the following statuses continue to be true for 5 seconds, if the communication with the ABS-ECU or ASC-ECU cannot be established for 600 ms or more, the ETACS-ECU determines that a problem has occurred.
- No abnormality is present to the network.
- Ignition switch is in the ON position.
- No abnormality is present to the power supply fuse (IOD fuse), or the odometer value is at 80.5 km or more.
- ETACS-ECU system voltage is at 10–16 V.

www.cargeek.ir

PROBABLE CAUSES
- Malfunction of ABS-ECU
- Malfunction of ASC-ECU
- Malfunction of the ETACS-ECU
- Malfunction of the CAN bus

DIAGNOSIS PROCEDURE

STEP 1. M.U.T.-III CAN bus diagnostics
Use the M.U.T.-III to diagnose the CAN bus lines.

Q: Is the check result normal?
YES : Go to Step 2.
NO : Repair the CAN bus line (Refer to GROUP 54C – Troubleshooting).

STEP 2. M.U.T.-III other system diagnosis code
Check if diagnosis code is set to the ABS-ECU or ASC-ECU.

Q: Is the diagnosis code set to the any of the above?
Set to the ABS-ECU. : Troubleshoot the ABS. Refer to GROUP 35B – Troubleshooting .
Set to the ASC-ECU. : Troubleshoot the ASC. Refer to GROUP 35C – Troubleshooting .
The diagnosis code is not set. : Go to Step 3.

STEP 3. M.U.T.-III other system diagnosis code
Check if the diagnosis code No. U0121 is set to the engine ECU.

Q: Is the diagnosis code set?
YES : Go to Step 4.
NO : Go to Step 5.

STEP 4. Check whether the diagnosis code is reset.
Check again if the diagnosis code is set to the ETACS-ECU.
(1) Erase the diagnosis code.
(2) Turn the ignition switch from "LOCK" (OFF) position to "ON" position.
(3) Check if diagnosis code is set.

Q: Is the diagnosis code set?
YES : Replace the ABS-ECU or ASC-ECU.
NO : The trouble can be an intermittent malfunction such as a poor connection or open circuit in the CAN bus lines between the ABS-ECU or ASC-ECU and the ETACS-ECU (GROUP 00 – How to use Troubleshooting/inspection Service Points – How to Cope with Intermittent Malfunction).

STEP 5. Check whether the diagnosis code is reset.
Check again if the diagnosis code is set to the ETACS-ECU.
(1) Erase the diagnosis code.
(2) Turn the ignition switch from "LOCK" (OFF) position to "ON" position.
(3) Check if diagnosis code is set.

Q: Is the diagnosis code set?
YES : Replace the ETACS-ECU.
NO : The trouble can be an intermittent malfunction such as a poor connection or open circuit in the CAN bus lines between the ABS-ECU or ASC-ECU and the ETACS-ECU (GROUP 00 – How to use Troubleshooting/inspection Service Points – How to Cope with Intermittent Malfunction).

Code No.U0126 Steering wheel sensor CAN timeout

⚠ CAUTION
- **If diagnosis code No. U0126 is set to the ETACS-ECU, always diagnose the CAN bus line.**
- **Before replacing the ECU, ensure that the communication circuit is normal.**

DIAGNOSTIC FUNCTION
If the signal from steering wheel sensor cannot be received, the ETACS-ECU sets the diagnosis code No. U0126.

JUDGMENT CRITERIA
After the following statuses continue to be true for 5 seconds, if the communication with the steering wheel sensor cannot be established for 600 ms or more, the ETACS-ECU determines that a problem has occurred.
- No abnormality is present to the network.
- Ignition switch is in the ON position.
- No abnormality is present to the power supply fuse (IOD fuse), or the odometer value is at 80.5 km or more.
- ETACS-ECU system voltage is at 10–16 V.

www.cargeek.ir

www.CarGeek.ir

PROBABLE CAUSES

- Malfunction of steering wheel sensor
- Malfunction of the ETACS-ECU
- Malfunction of the CAN bus

DIAGNOSIS PROCEDURE

STEP 1. M.U.T.-III CAN bus diagnostics

Use the M.U.T.-III to diagnose the CAN bus lines.

Q: Is the check result normal?

YES : Go to Step 2.

NO : Repair the CAN bus line (Refer to GROUP 54C – Troubleshooting).

STEP 2. M.U.T.-III other system diagnosis code

Check if diagnosis code is set to the steering wheel sensor.

Q: Is the diagnosis code set?

YES : Troubleshoot the steering wheel sensor. Refer to GROUP 35C – Troubleshooting .

NO : Go to Step 3.

STEP 3. M.U.T.-III other system diagnosis code

Check if the diagnosis code No. U0126 is set to the AFS-ECU.

Q: Is the diagnosis code set?

YES : Go to Step 4.

NO : Go to Step 5.

STEP 4. Check whether the diagnosis code is reset.

Check again if the diagnosis code is set to the ETACS-ECU.

(1) Erase the diagnosis code.

(2) Turn the ignition switch from "LOCK" (OFF) position to "ON" position.

(3) Check if diagnosis code is set.

Q: Is the diagnosis code set?

YES : Replace the steering wheel sensor.

NO : The trouble can be an intermittent malfunction such as a poor connection or open circuit in the CAN bus lines between the steering wheel sensor and the ETACS-ECU (GROUP 00 – How to use Troubleshooting/inspection Service Points – How to Cope with Intermittent Malfunction).

STEP 5. Check whether the diagnosis code is reset.

Check again if the diagnosis code is set to the ETACS-ECU.

(1) Erase the diagnosis code.

(2) Turn the ignition switch from "LOCK" (OFF) position to "ON" position.

(3) Check if diagnosis code is set.

Q: Is the diagnosis code set?

YES : Replace the ETACS-ECU.

NO : The trouble can be an intermittent malfunction such as a poor connection or open circuit in the CAN bus lines between the steering wheel sensor and the ETACS-ECU (GROUP 00 – How to use Troubleshooting/inspection Service Points – How to Cope with Intermittent Malfunction).

Code No.U0131 EPS CAN timeout

⚠ CAUTION

- **If diagnosis code No. U0131 is set to the ETACS-ECU, always diagnose the CAN bus line.**
- **Before replacing the ECU, ensure that the communication circuit is normal.**

DIAGNOSTIC FUNCTION

If the signal from EPS-ECU cannot be received, the ETACS-ECU sets the diagnosis code No. U0131.

JUDGMENT CRITERIA

After the following statuses continue to be true for 5 seconds, if the communication with the EPS-ECU cannot be established for 600 ms or more, the ETACS-ECU determines that a problem has occurred.

- No abnormality is present to the network.
- Ignition switch is in the ON position.
- No abnormality is present to the power supply fuse (IOD fuse), or the odometer value is at 80.5 km or more.
- ETACS-ECU system voltage is at 10–16 V.

www.cargeek.ir

www.CarGeek.ir

PROBABLE CAUSES
- Malfunction of EPS-ECU
- Malfunction of the ETACS-ECU
- Malfunction of the CAN bus

DIAGNOSIS PROCEDURE

STEP 1. M.U.T.-III CAN bus diagnostics
Use the M.U.T.-III to diagnose the CAN bus lines.

Q: Is the check result normal?
YES : Go to Step 2.
NO : Repair the CAN bus line (Refer to GROUP 54C – Troubleshooting).

STEP 2. M.U.T.-III other system diagnosis code
Check if diagnosis code is set to the EPS-ECU.

Q: Is the diagnosis code set?
YES : Troubleshoot the EPS. Refer to GROUP 37B – Troubleshooting .
NO : Go to Step 3.

STEP 3. M.U.T.-III other system diagnosis code
Check if the diagnosis code No. U0131 is set to the engine-ECU.

Q: Is the diagnosis code set?
YES : Go to Step 4.
NO : Go to Step 5.

STEP 4. Check whether the diagnosis code is reset.
Check again if the diagnosis code is set to the ETACS-ECU.
(1) Erase the diagnosis code.
(2) Turn the ignition switch from "LOCK" (OFF) position to "ON" position.
(3) Check if diagnosis code is set.

Q: Is the diagnosis code set?
YES : Replace the EPS-ECU.
NO : The trouble can be an intermittent malfunction such as a poor connection or open circuit in the CAN bus lines between the EPS-ECU and the ETACS-ECU (GROUP 00 – How to use Troubleshooting/ inspection Service Points – How to Cope with Intermittent Malfunction).

STEP 5. Check whether the diagnosis code is reset.
Check again if the diagnosis code is set to the ETACS-ECU.
(1) Erase the diagnosis code.
(2) Turn the ignition switch from "LOCK" (OFF) position to "ON" position.
(3) Check if diagnosis code is set.

Q: Is the diagnosis code set?
YES : Replace the ETACS-ECU.
NO : The trouble can be an intermittent malfunction such as a poor connection or open circuit in the CAN bus lines between the EPS-ECU and the ETACS-ECU (GROUP 00 – How to use Troubleshooting/ inspection Service Points – How to Cope with Intermittent Malfunction).

Code No.U0151 SRS CAN timeout

⚠ CAUTION
- **If the diagnosis code No. U0151 is set to the ETACS-ECU, always diagnose the CAN bus line.**
- **Before replacing the ECU, ensure that the communication circuit is normal.**

DIAGNOSTIC FUNCTION
If the signal from SRS-ECU cannot be received, the ETACS-ECU sets the diagnosis code No. U0151.

JUDGMENT CRITERIA
After the following statuses continue to be true for 5 seconds, if the communication with the SRS-ECU cannot be established for 2,500 ms or more, the ETACS-ECU determines that a problem has occurred.
- No abnormality is present to the network.
- Ignition switch is in the ON position.
- No abnormality is present to the power supply fuse (IOD fuse), or the odometer value is at 80.5 km or more.
- ETACS-ECU system voltage is at 10–16 V.

www.cargeek.ir

www.CarGeek.ir

PROBABLE CAUSES
- Malfunction of the SRS-ECU
- Malfunction of the ETACS-ECU
- Malfunction of the CAN bus

DIAGNOSIS PROCEDURE

STEP 1. M.U.T.-III CAN bus diagnostics
Use the M.U.T.-III to diagnose the CAN bus lines.

Q: Is the check result normal?
YES : Go to Step 2.
NO : Repair the CAN bus line (Refer to GROUP 54C – Troubleshooting).

STEP 2. M.U.T.-III other system diagnosis code
Check if diagnosis code is set to the SRS-ECU.

Q: Is the diagnosis code set?
YES : Troubleshoot the SRS air bag (Refer to GROUP 52B – Troubleshooting).
NO : Go to Step 3.

STEP 3. M.U.T.-III other system diagnosis code
Check if the diagnosis code No. U0151 is set to the KOS-ECU, WCM, radio and CD player, combination meter, or A/C-ECU.

Q: Is the diagnosis code set?
YES : Go to Step 4.
NO : Go to Step 5.

STEP 4. Check whether the diagnosis code is reset.
Check again if the diagnosis code is set to the ETACS-ECU.
(1) Erase the diagnosis code.
(2) Turn the ignition switch from "LOCK" (OFF) position to "ON" position.
(3) Check if diagnosis code is set.

Q: Is the diagnosis code set?
YES : Replace the SRS-ECU.
NO : The trouble can be an intermittent malfunction such as a poor connection or open circuit in the CAN bus lines between the SRS-ECU and the ETACS-ECU (GROUP 00 – How to use Troubleshooting/ inspection Service Points – How to Cope with Intermittent Malfunction).

STEP 5. Check whether the diagnosis code is reset.
Check again if the diagnosis code is set to the ETACS-ECU.
(1) Erase the diagnosis code.
(2) Turn the ignition switch from "LOCK" (OFF) position to "ON" position.
(3) Check if diagnosis code is set.

Q: Is the diagnosis code set?
YES : Replace the ETACS-ECU.
NO : The trouble can be an intermittent malfunction such as a poor connection or open circuit in the CAN bus lines between the SRS-ECU and the ETACS-ECU (GROUP 00 – How to use Troubleshooting/ inspection Service Points – How to Cope with Intermittent Malfunction).

Code No.U0155 Meter CAN timeout

⚠ CAUTION
- **If the diagnosis code No. U0155 is set to the ETACS-ECU, always diagnose the CAN bus line.**
- **Before replacing the ECU, ensure that the communication circuit is normal.**

DIAGNOSTIC FUNCTION
If the signal from combination meter cannot be received, the ETACS-ECU sets the diagnosis code No. U0155.

JUDGMENT CRITERIA
After the following statuses continue to be true for 5 seconds, if the communication with the combination meter cannot be established for 2,500 ms or more, the ETACS-ECU determines that a problem has occurred.
- No abnormality is present to the network.
- Ignition switch is in the ON position.
- No abnormality is present to the power supply fuse (IOD fuse), or the odometer value is at 80.5 km or more.
- ETACS-ECU system voltage is at 10–16 V.

www.cargeek.ir

PROBABLE CAUSES
- Malfunction of combination meter
- Malfunction of the ETACS-ECU
- Damaged harness wires and connectors

DIAGNOSIS PROCEDURE

STEP 1. M.U.T.-III CAN bus diagnostics
Use the M.U.T.-III to diagnose the CAN bus lines.

Q: Is the check result normal?
YES : Go to Step 2.
NO : Repair the CAN bus line (Refer to GROUP 54C – Troubleshooting).

STEP 2. M.U.T.-III other system diagnosis code
Check if diagnosis code is set to the combination meter.

Q: Is the diagnosis code set?
YES : Troubleshoot the combination meter. Refer to .
NO : Go to Step 3.

STEP 3. M.U.T.-III other system diagnosis code
Check if the diagnosis code No. U0155 is set to the KOS-ECU, WCM, radio and CD player, SRS-ECU, or A/C-ECU.

Q: Is the diagnosis code set?
YES : Go to Step 4.
NO : Go to Step 5.

STEP 4. Check whether the diagnosis code is reset.
Check again if the diagnosis code is set to the ETACS-ECU.
(1) Erase the diagnosis code.
(2) Turn the ignition switch from "LOCK" (OFF) position to "ON" position.
(3) Check if diagnosis code is set.

Q: Is the diagnosis code set?
YES : Replace the combination meter.
NO : The trouble can be an intermittent malfunction such as a poor connection or open circuit in the CAN bus lines between the combination meter and the ETACS-ECU (Refer to GROUP 00 – How to use Troubleshooting/inspection Service Points – How to Cope with Intermittent Malfunction).

STEP 5. Check whether the diagnosis code is reset.
Check again if the diagnosis code is set to the ETACS-ECU.
(1) Erase the diagnosis code.
(2) Turn the ignition switch from "LOCK" (OFF) position to "ON" position.
(3) Check if diagnosis code is set.

Q: Is the diagnosis code set?
YES : Replace the ETACS-ECU.
NO : The trouble can be an intermittent malfunction such as a poor connection or open circuit in the CAN bus lines between the combination meter and the ETACS-ECU (Refer to GROUP 00 – How to use Troubleshooting/inspection Service Points – How to Cope with Intermittent Malfunction).

Code No.U0164 A/C/Heater control unit CAN timeout

⚠ CAUTION
- **If the diagnosis code No. U0164 is set to the ETACS-ECU, always diagnose the CAN bus line.**
- **Before replacing the ECU, ensure that the communication circuit is normal.**

DIAGNOSTIC FUNCTION
If the signal from A/C-ECU cannot be received, the ETACS-ECU sets the diagnosis code No. U0164.

JUDGMENT CRITERIA
After the following statuses continue to be true for 5 seconds, if the communication with the A/C-ECU cannot be established for 2,500 ms or more, the ETACS-ECU determines that a problem has occurred.
- No abnormality is present to the network.
- Ignition switch is in the ON position.
- No abnormality is present to the power supply fuse (IOD fuse), or the odometer value is at 80.5 km or more.
- ETACS-ECU system voltage is at 10–16 V.

www.cargeek.ir

www.CarGeek.ir

PROBABLE CAUSES
- Malfunction of the A/C-ECU
- Malfunction of the ETACS-ECU
- Damaged harness wires and connectors

DIAGNOSIS PROCEDURE

STEP 1. M.U.T.-III CAN bus diagnostics
Use the M.U.T.-III to diagnose the CAN bus lines.

Q: Is the check result normal?
YES : Go to Step 2.
NO : Repair the CAN bus line (Refer to GROUP 54C – Troubleshooting).

STEP 2. M.U.T.-III other system diagnosis code
Check if diagnosis code is set to the A/C-ECU.

Q: Is the diagnosis code set?
YES : Troubleshoot the A/C-ECU (Refer to GROUP 55A – Troubleshooting).
NO : Go to Step 3.

STEP 3. M.U.T.-III other system diagnosis code
Check if the diagnosis code No. U0164 is set to the KOS-ECU, WCM, radio and CD player, combination meter, or SRS-ECU.

Q: Is the diagnosis code set?
YES : Go to Step 4.
NO : Go to Step 5.

STEP 4. Check whether the diagnosis code is reset.
Check again if the diagnosis code is set to the ETACS-ECU.
(1) Erase the diagnosis code.
(2) Turn the ignition switch from "LOCK" (OFF) position to "ON" position.
(3) Check if diagnosis code is set.

Q: Is the diagnosis code set?
YES : Replace the A/C-ECU.
NO : The trouble can be an intermittent malfunction such as a poor connection or open circuit in the CAN bus lines between the A/C-ECU and the ETACS-ECU (Refer to GROUP 00 – How to use Troubleshooting/ inspection Service Points – How to Cope with Intermittent Malfunction).

STEP 5. Check whether the diagnosis code is reset.
Check again if the diagnosis code is set to the ETACS-ECU.
(1) Erase the diagnosis code.
(2) Turn the ignition switch from "LOCK" (OFF) position to "ON" position.
(3) Check if diagnosis code is set.

Q: Is the diagnosis code set?
YES : Replace the ETACS-ECU.
NO : The trouble can be an intermittent malfunction such as a poor connection or open circuit in the CAN bus lines between the A/C-ECU and the ETACS-ECU (Refer to GROUP 00 – How to use Troubleshooting/ inspection Service Points – How to Cope with Intermittent Malfunction).

Code No.U0168 KOS/WCM CAN timeout

⚠ CAUTION
- **If the diagnosis code No. U0168 is set to the ETACS-ECU, always diagnose the CAN bus line.**
- **Before replacing the ECU, ensure that the communication circuit is normal.**

DIAGNOSTIC FUNCTION
If the signal from KOS-ECU or WCM cannot be received, the ETACS-ECU sets the diagnosis code No. U0168.

JUDGMENT CRITERIA
After the following statuses continue to be true for 5 seconds, if the communication with the KOS-ECU or WCM cannot be established for 2,500 ms or more, the ETACS-ECU determines that a problem has occurred.
- No abnormality is present to the network.
- Ignition switch is in the ON position.
- No abnormality is present to the power supply fuse (IOD fuse), or the odometer value is at 80.5 km or more.
- ETACS-ECU system voltage is at 10–16 V.

www.cargeek.ir

PROBABLE CAUSES
- Malfunction of the KOS-ECU
- Malfunction of the WCM
- Malfunction of the ETACS-ECU
- Malfunction of the CAN bus

DIAGNOSIS PROCEDURE

STEP 1. M.U.T.-III CAN bus diagnostics
Use the M.U.T.-III to diagnose the CAN bus lines.

Q: Is the check result normal?
YES : Go to Step 2.
NO : Repair the CAN bus line (Refer to GROUP 54C – Troubleshooting).

STEP 2. M.U.T.-III other system diagnosis code
Check if diagnosis code is set to the KOS-ECU or WCM.

Q: Is the diagnosis code set to the any of the above?
Set to the KOS-ECU. : Troubleshoot the KOS. Refer to GROUP 42B – Diagnosis Code Chart .
Set to the WCM. : Troubleshoot the WCM. Refer to GROUP 42C – Diagnosis Code Chart .
The diagnosis code is not set. : Go to Step 3.

STEP 3. M.U.T.-III other system diagnosis code
Check if the diagnosis code No. U0168 is set to the SRS-ECU, radio and CD player, combination meter, or A/C-ECU.

Q: Is the diagnosis code set?
YES : Go to Step 4.
NO : Go to Step 5.

STEP 4. Check whether the diagnosis code is reset.
Check again if the diagnosis code is set to the ETACS-ECU.
(1) Erase the diagnosis code.
(2) Turn the ignition switch from "LOCK" (OFF) position to "ON" position.
(3) Check if diagnosis code is set.

Q: Is the diagnosis code set?
YES : Replace the KOS-ECU or WCM.
NO : The trouble can be an intermittent malfunction such as a poor connection or open circuit in the CAN bus lines between the KOS-ECU or WCM and the ETACS-ECU (Refer to GROUP 00 – How to use Troubleshooting/inspection Service Points – How to Cope with Intermittent Malfunction).

STEP 5. Check whether the diagnosis code is reset.
Check again if the diagnosis code is set to the ETACS-ECU.
(1) Erase the diagnosis code.
(2) Turn the ignition switch from "LOCK" (OFF) position to "ON" position.
(3) Check if diagnosis code is set.

Q: Is the diagnosis code set?
YES : Replace the ETACS-ECU.
NO : The trouble can be an intermittent malfunction such as a poor connection or open circuit in the CAN bus lines between the KOS-ECU or WCM and the ETACS-ECU (Refer to GROUP 00 – How to use Troubleshooting/inspection Service Points – How to Cope with Intermittent Malfunction).

Code No.U0181 Headlamp automatic levelling-ECU CAN timeout

⚠ CAUTION
- **If diagnosis code No. U0181 is set to the ETACS-ECU, always diagnose the CAN bus line.**
- **Before replacing the ECU, ensure that the communication circuit is normal.**

DIAGNOSTIC FUNCTION
If the signal from headlamp automatic levelling-ECU cannot be received, the ETACS-ECU sets the diagnosis code No. U0181.

JUDGMENT CRITERIA
After the following statuses continue to be true for 5 seconds, if the communication with the headlamp automatic levelling-ECU cannot be established for 600 ms or more, the ETACS-ECU determines that a problem has occurred.
- No abnormality is present to the network.
- Ignition switch is in the ON position.
- No abnormality is present to the power supply fuse (IOD fuse), or the odometer value is at 80.5 km or more.
- ETACS-ECU system voltage is at 10–16 V.

www.cargeek.ir

www.CarGeek.ir

PROBABLE CAUSES
- Malfunction of the headlamp automatic levelling-ECU
- Malfunction of the ETACS-ECU
- Malfunction of the CAN bus

DIAGNOSIS PROCEDURE

STEP 1. M.U.T.-III CAN bus diagnostics
Use the M.U.T.-III to diagnose the CAN bus lines.

Q: Is the check result normal?
YES : Go to Step 2.
NO : Repair the CAN bus line (Refer to GROUP 54C – Troubleshooting).

STEP 2. M.U.T.-III other system diagnosis code
Check if diagnosis code is set to the headlamp automatic levelling-ECU.

Q: Is the diagnosis code set?
YES : Troubleshoot the headlamp automatic levelling-ECU. Refer to .
NO : Go to Step 3.

STEP 3. Check whether the diagnosis code is reset.
Check again if the diagnosis code is set to the ETACS-ECU.
(1) Erase the diagnosis code.
(2) Turn the ignition switch from "LOCK" (OFF) position to "ON" position.
(3) Check if diagnosis code is set.

Q: Is the diagnosis code set?
YES : Replace the headlamp automatic levelling-ECU. Go to Step 4.
NO : The trouble can be an intermittent malfunction such as a poor connection or open circuit in the CAN bus lines between the headlamp automatic levelling-ECU and the ETACS-ECU (GROUP 00 – How to use Troubleshooting/inspection Service Points – How to Cope with Intermittent Malfunction).

STEP 4. Check whether the diagnosis code is reset.
Check again if the diagnosis code is set to the ETACS-ECU.
(1) Erase the diagnosis code.
(2) Turn the ignition switch from "LOCK" (OFF) position to "ON" position.
(3) Check if diagnosis code is set.

Q: Is the diagnosis code set?
YES : Replace the ETACS-ECU.
NO : The trouble can be an intermittent malfunction such as a poor connection or open circuit in the CAN bus lines between the headlamp automatic levelling-ECU and the ETACS-ECU (GROUP 00 – How to use Troubleshooting/inspection Service Points – How to Cope with Intermittent Malfunction).

Code No.U0184 Audio CAN timeout

⚠ CAUTION
- **If the diagnosis code No. U0184 is set to the ETACS-ECU, always diagnose the CAN bus line.**
- **Before replacing the ECU, ensure that the communication circuit is normal.**

DIAGNOSTIC FUNCTION
When the signals from radio and CD player cannot be received, the ETACS-ECU sets the diagnosis code No. U0184.

JUDGMENT CRITERIA
After the following statuses continue to be true for 5 seconds, if the communication with the radio and CD player cannot be established for 2,500 ms or more, the ETACS-ECU determines that a problem has occurred.
- No abnormality is present to the network.
- Ignition switch is in the ON position.
- No abnormality is present to the power supply fuse (IOD fuse), or the odometer value is at 80.5 km or more.
- ETACS-ECU system voltage is at 10–16 V.

PROBABLE CAUSES
- Malfunctions of the radio and CD player
- Malfunction of the ETACS-ECU
- Malfunction of the CAN bus

DIAGNOSIS PROCEDURE

STEP 1. M.U.T.-III CAN bus diagnostics
Use the M.U.T.-III to diagnose the CAN bus lines.

Q: Is the check result normal?

www.cargeek.ir

YES : Go to Step 2.
NO : Repair the CAN bus line (Refer to GROUP 54C – Troubleshooting).

STEP 2. M.U.T.-III other system diagnosis code
Check if diagnosis code is set to the radio and CD player.

Q: Is the diagnosis code set?
YES : Perform the diagnosis code troubleshooting to the radio and CD player. Refer to .
NO : Go to Step 3.

STEP 3. M.U.T.-III other system diagnosis code
Check if the diagnosis code No. U0184 is set to the SRS-ECU, combination meter, or A/C-ECU.

Q: Is the diagnosis code set?
YES : Go to Step 4.
NO : Go to Step 5.

STEP 4. Check whether the diagnosis code is reset.
Check again if the diagnosis code is set to the ETACS-ECU.
(1) Erase the diagnosis code.
(2) Turn the ignition switch from "LOCK" (OFF) position to "ON" position.
(3) Check if diagnosis code is set.

Q: Is the diagnosis code set?
YES : Replace the radio and CD player.
NO : The trouble can be an intermittent malfunction such as a poor connection or open circuit in the CAN bus lines between the radio and CD player and the ETACS-ECU (Refer to GROUP 00 – How to Use Troubleshooting/Inspection Service Points – How to Cope with Intermittent Malfunction).

STEP 5. Check whether the diagnosis code is reset.
Check again if the diagnosis code is set to the ETACS-ECU.
(1) Erase the diagnosis code.
(2) Turn the ignition switch from "LOCK" (OFF) position to "ON" position.
(3) Check if diagnosis code is set.

Q: Is the diagnosis code set?
YES : Replace the ETACS-ECU.
NO : The trouble can be an intermittent malfunction such as a poor connection or open circuit in the CAN bus lines between the radio and CD player and the ETACS-ECU (Refer to GROUP 00 – How to Use Troubleshooting/Inspection Service Points – How to Cope with Intermittent Malfunction).

Code No.U0245 Audio visual navigation unit CAN timeout

⚠ CAUTION
- **If the diagnosis code No. U0245 is set to the ETACS-ECU, always diagnose the CAN bus line.**
- **Before replacing the ECU, ensure that the communication circuit is normal.**

DIAGNOSTIC FUNCTION
When the signals from CAN box unit (audio visual navigation unit) cannot be received, the ETACS-ECU sets the diagnosis code No. U0245.

JUDGMENT CRITERIA
After the following statuses continue to be true for 5 seconds, if the communication with the CAN box unit (audio visual navigation unit) be established for 2,500 ms or more, the ETACS-ECU determines that a problem has occurred.
- No abnormality is present to the network.
- Ignition switch is in the ON position.
- No abnormality is present to the power supply fuse (IOD fuse), or the odometer value is at 80.5 km or more.
- ETACS-ECU system voltage is at 10–16 V.

PROBABLE CAUSES
- Malfunctions of CAN box unit
- Malfunction of the ETACS-ECU
- Malfunction of the CAN bus

DIAGNOSIS PROCEDURE

STEP 1. M.U.T.-III CAN bus diagnostics
Use the M.U.T.-III to diagnose the CAN bus lines.

Q: Is the check result normal?
YES : Go to Step 2.
NO : Repair the CAN bus line (Refer to GROUP 54C – Troubleshooting).

www.cargeek.ir

www.CarGeek.ir

STEP 2. M.U.T.-III other system diagnosis code
Check if diagnosis code is set to the audio visual navigation unit.

Q: Is the diagnosis code set?
YES : Perform the diagnosis code troubleshooting to the audio visual navigation unit. Refer to .
NO : Go to Step 3.

STEP 3. M.U.T.-III other system diagnosis code
Check if the diagnosis code No. U0245 is set to the combination meter.

Q: Is the diagnosis code set?
YES : Go to Step 4.
NO : Go to Step 5.

STEP 4. Check whether the diagnosis code is reset.
Check again if the diagnosis code is set to the ETACS-ECU.
(1) Erase the diagnosis code.
(2) Turn the ignition switch from "LOCK" (OFF) position to "ON" position.
(3) Check if diagnosis code is set.

Q: Is the diagnosis code set?
YES : Replace the CAN box unit (audio visual navigation unit).
NO : The trouble can be an intermittent malfunction such as a poor connection or open circuit in the CAN bus lines between the CAN box unit (audio visual navigation unit) and the ETACS-ECU (Refer to GROUP 00 – How to Use Troubleshooting/ Inspection Service Points – How to Cope with Intermittent Malfunction).

STEP 5. Check whether the diagnosis code is reset.
Check again if the diagnosis code is set to the ETACS-ECU.
(1) Erase the diagnosis code.
(2) Turn the ignition switch from "LOCK" (OFF) position to "ON" position.
(3) Check if diagnosis code is set.

Q: Is the diagnosis code set?
YES : Replace the ETACS-ECU.
NO : The trouble can be an intermittent malfunction such as a poor connection or open circuit in the CAN bus lines between the CAN box unit (audio visual navigation unit) and the ETACS-ECU (Refer to GROUP 00 – How to Use Troubleshooting/ Inspection Service Points – How to Cope with Intermittent Malfunction).

Code No.U0331 ECU internal error

JUDGMENT CRITERIA
If the ETACS-ECU error counter value is detected to be "255," the diagnosis code No. U0331 is set, and the ETACS-ECU is reset. The diagnosis code No. U0331 exists only for the past trouble.

PROBABLE CAUSES
- Malfunction of the ETACS-ECU

DIAGNOSIS PROCEDURE

M.U.T.-III diagnosis code
Check if diagnosis code is set to the ETACS-ECU.
(1) Erase the diagnosis code.
(2) Turn the ignition switch from "LOCK" (OFF) position to "ON" position.
(3) Check if diagnosis code is set.

Q: Is the diagnosis code set?
YES : Replace the ETACS-ECU.
NO : The diagnosis is complete.

www.cargeek.ir

Code No.U1004 AS&G CAN timeout

⚠ CAUTION

- **If diagnosis code No. U1004 is set to the ETACS-ECU, always diagnose the CAN bus line.**
- **Before replacing the ECU, ensure that the communication circuit is normal.**

DIAGNOSTIC FUNCTION

If the signal from AS&G-ECU cannot be received, the ETACS-ECU sets the diagnosis code No. U1004.

JUDGEMENT CRITERIA

After the following statuses continue to be true for 5 seconds, if the communication with the AS&G-ECU cannot be established for 600 ms or more, the ETACS-ECU determines that a problem has occurred.

- No abnormality is present to the network.
- Ignition switch is in the ON position.
- No abnormality is present to the power supply fuse (IOD fuse), or the odometer value is at 80.5 km or more.
- ETACS-ECU system voltage is at 10–16 V.

PROBABLE CAUSES

- Malfunction of the AS&G-ECU
- Malfunction of the ETACS-ECU
- Malfunction of the CAN bus

DIAGNOSIS PROCEDURE

STEP 1. M.U.T.-III CAN bus diagnostics

Use the M.U.T.-III to diagnose the CAN bus lines.

Q: Is the check result normal?

YES : Go to Step 2.

NO : Repair the CAN bus line (Refer to GROUP 54C – Troubleshooting).

STEP 2. M.U.T.-III other system diagnosis code

Check if diagnosis code is set to the AS&G-ECU.

Q: Is the diagnosis code set?

YES : Troubleshoot the AS&G-ECU. Refer to GROUP 17 – Troubleshooting .

NO : Go to Step 3.

STEP 3. M.U.T.-III other system diagnosis code

Check if the diagnosis code No. U1004 is set to the engine-ECU.

Q: Is the diagnosis code set?

YES : Go to Step 4.

NO : Go to Step 5.

STEP 4. Check whether the diagnosis code is reset.

Check again if the diagnosis code is set to the ETACS-ECU.

(1) Erase the diagnosis code.
(2) Turn the ignition switch from "LOCK" (OFF) position to "ON" position.
(3) Check if diagnosis code is set.

Q: Is the diagnosis code set?

YES : Replace the AS&G-ECU.

NO : The trouble can be an intermittent malfunction such as a poor connection or open circuit in the CAN bus lines between the AS&G-ECU and the ETACS-ECU (GROUP 00 – How to use Troubleshooting/ inspection Service Points – How to Cope with Intermittent Malfunction).

STEP 5. Check whether the diagnosis code is reset.

Check again if the diagnosis code is set to the ETACS-ECU.

(1) Erase the diagnosis code.
(2) Turn the ignition switch from "LOCK" (OFF) position to "ON" position.
(3) Check if diagnosis code is set.

Q: Is the diagnosis code set?

YES : Replace the ETACS-ECU.

NO : The trouble can be an intermittent malfunction such as a poor connection or open circuit in the CAN bus lines between the AS&G-ECU and the ETACS-ECU (GROUP 00 – How to use Troubleshooting/ inspection Service Points – How to Cope with Intermittent Malfunction).

www.cargeek.ir

www.CarGeek.ir

Code No. U1005 Corner sensor/back sensor-ECU CAN timeout

⚠ CAUTION

- **If diagnosis code No. U1005 is set to the ETACS-ECU, always diagnose the CAN bus line.**
- **Before replacing the ECU, ensure that the communication circuit is normal.**

DIAGNOSTIC FUNCTION

If the signal from corner sensor/back sensor-ECU cannot be received, the ETACS-ECU sets the diagnosis code No. U1005.

JUDGEMENT CRITERIA

After the following statuses continue to be true for 5 seconds, if the communication with the corner sensor/back sensor-ECU cannot be established for 600 ms or more, the ETACS-ECU determines that a problem has occurred.

- No abnormality is present to the network.
- Ignition switch is in the ON position.
- No abnormality is present to the power supply fuse (IOD fuse), or the odometer value is at 80.5 km or more.
- ETACS-ECU system voltage is at 10–16 V.

PROBABLE CAUSES

- Malfunction of the corner sensor/back sensor-ECU
- Malfunction of the ETACS-ECU
- Malfunction of the CAN bus

DIAGNOSIS PROCEDURE

STEP 1. M.U.T.-III CAN bus diagnostics

Use M.U.T.-III to diagnose the CAN bus lines.

Q: Is the check result normal?

YES : Go to Step 2.

NO : Repair the CAN bus lines. (Refer to GROUP 54C – Troubleshooting .)

STEP 2. Check the M.U.T.-III Diagnosis code for other systems

Check if a diagnosis code is set to the corner sensor/back sensor-ECU.

Q: Is the diagnosis code set?

YES : Perform troubleshooting for the corner sensor/back sensor-ECU. (Refer to .)

NO : Go to Step 3.

STEP 3. Check whether the diagnosis code is reset.

Check again if the diagnosis code is set to ETACS-ECU.

(1) Erase the diagnosis code.
(2) Turn the ignition switch from the LOCK (OFF) position to the ON position.
(3) Check if the diagnosis code is set.

Q: Is the diagnosis code set?

YES : Replace the corner sensor/back sensor-ECU. Go to Step 4.

NO : A poor connection, open circuit, or other intermittent malfunction in the CAN bus line between the corner sensor/back sensor-ECU and ETACS-ECU. (Refer to GROUP 00 – How to Use Troubleshooting/ Inspection Service Points - How to Cope with Intermittent Malfunction .)

STEP 4. Check whether the diagnosis code is reset.

Check again if the diagnosis code is set to ETACS-ECU.

(1) Erase the diagnosis code.
(2) Turn the ignition switch from the LOCK (OFF) position to the ON position.
(3) Check if the diagnosis code is set.

Q: Is the diagnosis code set?

YES : Replace the ETACS-ECU.

NO : A poor connection, open circuit, or other intermittent malfunction in the CAN bus line between the corner sensor/back sensor-ECU and ETACS-ECU. (Refer to GROUP 00 – How to Use Troubleshooting/ Inspection Service Points - How to Cope with Intermittent Malfunction .)

www.cargeek.ir

Code No.U1108 Additional CAN-B ECU detected

⚠ CAUTION

If the diagnosis code No. U1108 is set to the ETACS-ECU, always diagnose the CAN bus line.

JUDGMENT CRITERIA

If the ETACS-ECU receives the signal from the CAN-B line ECU which does not exist in the written variant code information, the ETACS-ECU sets the diagnosis code No. U1108.

PROBABLE CAUSES

- Malfunction of the ETACS-ECU
- Malfunction of the CAN bus

DIAGNOSIS PROCEDURE

STEP 1. M.U.T.-III CAN bus diagnostics

Use the M.U.T.-III to diagnose the CAN bus lines.

Q: Is the check result normal?

YES : Go to Step 2.

NO : Repair the CAN bus line (Refer to GROUP 54C – Troubleshooting).

STEP 2. Variant code check

Check the variant code written to the ETACS-ECU, and check whether it matches the ECU connected to the CAN-B line.

Q: Is the check result normal?

YES : Go to Step 3.

NO : Make a correction so that the ECU connected to the CAN-B line matches with the variant code information, and then go to Step 3.

STEP 3. Check whether the diagnosis code is reset.

Check again if the diagnosis code is set to the ETACS-ECU.

(1) Erase the diagnosis code.
(2) Turn the ignition switch from "LOCK" (OFF) position to "ON" position.
(3) Check if diagnosis code is set.

Q: Is the diagnosis code set?

YES : Replace the ETACS-ECU.

NO : This diagnosis is complete.

Code No.U1120 Bus line (CAN-C) low input
Code No.U1121 Bus line (CAN-C) high input

JUDGMENT CRITERIA

When the CAN bus line voltage is in the following states, the ETACS-ECU set the diagnosis code.

- If the CAN bus line voltage is 0.3 V or less, the diagnosis code No. U1120 is set.
- If the CAN bus line voltage is 4.7 V or more, the diagnosis code No. U1121 is set.

PROBABLE CAUSES

- Malfunction of CAN bus line

DIAGNOSIS PROCEDURE

STEP 1. M.U.T.-III CAN bus diagnostics

Use the M.U.T.-III to diagnose the CAN bus lines.

Q: Is the check result normal?

YES : Go to Step 2.

NO : Repair the CAN bus line (Refer to GROUP 54C – Troubleshooting).

STEP 2. Check whether the diagnosis code is reset.

Check again if the diagnosis code is set to the ETACS-ECU.

(1) Erase the diagnosis code.
(2) Turn the ignition switch from "LOCK" (OFF) position to "ON" position.
(3) Check if diagnosis code is set.

Q: Is the diagnosis code set?

YES : Replace the ETACS-ECU.

NO : The diagnosis is complete.

www.cargeek.ir

www.CarGeek.ir

Code No.B1761 Chassis No. not programmed

JUDGMENT CRITERIA
If the chassis number is not written to the ETACS-ECU, the ETACS-ECU sets diagnosis code No. B1761.

PROBABLE CAUSES
- Chassis No. not programmed
- Malfunction of the ETACS-ECU

DIAGNOSIS PROCEDURE

M.U.T.-III diagnosis code
Check if diagnosis code is set to the ETACS-ECU.
(1) Write the chassis number to the ETACS-ECU.
(2) Erase the diagnosis code.
(3) Turn the ignition switch from "LOCK" (OFF) position to "ON" position.
(4) Check if diagnosis code is set.

Q: Is the diagnosis code set?
YES : Replace with the coded ETACS-ECU.
NO : The diagnosis is complete.

Code No.B210A +B power supply (low input)
Code No.B210B +B power supply (high input)

⚠ CAUTION
Before replacing the ECU, ensure that the input and output signal circuits are normal.

ETACS-ECU Power Source Circuit

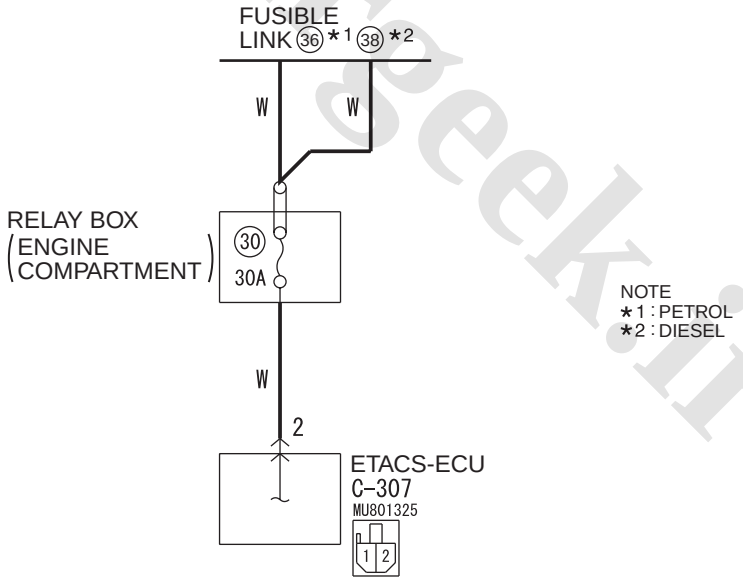

Wire colour code
B : Black LG : Light green G : Green L : Blue W : White Y : Yellow SB : Sky blue
BR : Brown O : Orange GR : Grey R : Red P : Pink V : Violet PU : Purple SI : Silver

WDH54E009A

www.cargeek.ir

www.CarGeek.ir

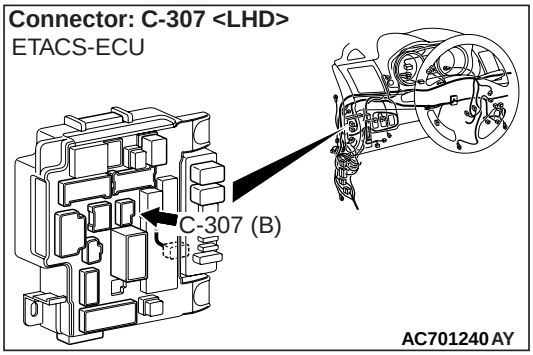

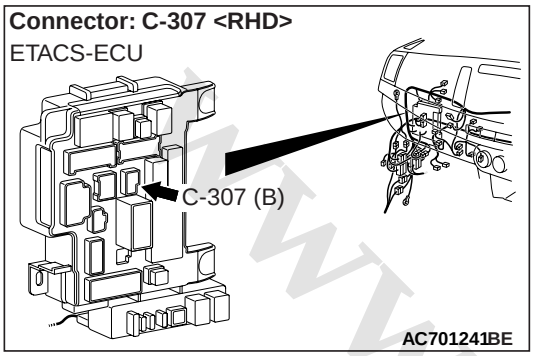

TROUBLE JUDGEMENT

The ETACS-ECU sets the code No. B210A if the power supply fuse voltage decreases to the specified value or less, and sets the code No. B210B if the power supply fuse voltage increases to the specified value or more. However, when the status returns to normal, the ETACS-ECU automatically erases the code Nos. B210A and B210B.

COMMENTS ON TROUBLE SYMPTOM

The power supply fuse or the ETACS-ECU may have a problem.

PROBABLE CAUSES

- Malfunction of power supply fuse
- Malfunction of the ETACS-ECU
- Malfunction of battery
- Malfunction of alternator
- Malfunction of harness

DIAGNOSIS PROCEDURE

STEP 1. Power supply fuse check

Q: Is the fuse in good condition?
YES : Go to Step 2.
NO : Replace the power supply fuse, and then go to Step 8.

STEP 2. Battery check

Refer to GROUP 54A – Battery Test .

Q: Is the battery in good condition?
YES : Go to Step 3.
NO : Charge or replace the battery.

STEP 3. Charging system check

Refer to GROUP 16 – Charging System <except 1800-Diesel> or <1800-Diesel>.

Q: Is the charging system in good condition?
YES : Go to Step 4.
NO : Repair or replace the charging system component(s).

STEP 4. Connector check: C-307 ETACS-ECU connector

Q: Is the check result normal?
YES : Go to Step 5.
NO : Repair the defective connector.

STEP 5. Voltage measurement at the C-307 ETACS-ECU connector.

(1) Disconnect the connector, and measure at the wiring harness side.
(2) Measure the voltage between the C-307 ETACS-ECU connector terminal No. 2 and the body earth.

OK: System voltage

Q: Is the check result normal?
YES : Go to Step 7.
NO : Go to Step 6.

STEP 6. Wiring harness check between the C-307 ETACS-ECU connector terminal No. 2 and the fusible link (36) <except 1800-DIESEL> or (38) <1800-DIESEL>.

Check the power supply line for open circuit.

Q: Is the check result normal?
YES : The trouble can be an intermittent malfunction (Refer to GROUP 00 – How to use Troubleshooting/inspection Service Points – How to Cope with Intermittent Malfunction).
NO : Repair the wiring harness.

www.cargeek.ir

www.CarGeek.ir

STEP 7. M.U.T.-III data list
Check the power supply fuse voltage.
- Ignition switch: OFF

Item No.	Item name	Normal condition
Item 253	Voltage sensing of IOD Line	System voltage

OK: Normal condition is displayed.

Q: Is the check result normal?
YES : Go to Step 8.
NO : Replace the ETACS-ECU.

STEP 8. Check whether the diagnosis code is reset.
Check again if the diagnosis code is set to the ETACS-ECU.
(1) Erase the diagnosis code.
(2) Turn the ignition switch from "LOCK" (OFF) position to "ON" position.
(3) Check if diagnosis code is set.

Q: Is the diagnosis code set?
YES : Replace the ETACS-ECU.
NO : The trouble can be an intermittent malfunction (GROUP 00 – How to use Troubleshooting/Inspection Service Points – How to Cope with Intermittent Malfunction).

Code No.B2206 Chassis No. mismatch

⚠ CAUTION
If the diagnosis code No. B2206 is set, always diagnose the CAN bus line.

DIAGNOSTIC FUNCTION
If the registered chassis number is different from the chassis number transmitted on the CAN bus lines, the ETACS-ECU sets the diagnosis code No. B2206.

JUDGEMENT CRITERIA
If the chassis number registered to ETACS-ECU and the chassis number on CAN bus lines do not match, the ETACS-ECU determines that a problem has occurred.

PROBABLE CAUSES
- Chassis number not written
- Malfunction of the ETACS-ECU
- Malfunction of engine ECU
- Malfunction of CAN bus line

DIAGNOSIS PROCEDURE

STEP 1. M.U.T.-III CAN bus diagnostics
Use the M.U.T.-III to diagnose the CAN bus lines.

Q: Is the check result normal?
YES : Go to Step 2.
NO : Repair the CAN bus line (Refer to GROUP 54C – Troubleshooting). On completion, go to Step 3.

STEP 2. M.U.T.-III other system diagnosis code
Check if diagnosis code is set to the engine-ECU.

Q: Is the diagnosis code set?
YES : Troubleshoot the engine (Refer to GROUP 13A – Troubleshooting <1600> or GROUP 13B – Troubleshooting <1800-PETROL-DOHC, 2000> or GROUP 13C – Troubleshooting <DIESEL> or GROUP 13F – Troubleshooting <1800-SOHC>).
NO : Go to Step 3.

STEP 3. Check whether the diagnosis code is reset.
Check again if the diagnosis code is set to the ETACS-ECU.
(1) Write the chassis number to the ETACS-ECU.
(2) Erase the diagnosis code.
(3) Turn the ignition switch from "LOCK" (OFF) position to "ON" position.
(4) Check if diagnosis code is set.

Q: Is the diagnosis code set?
YES : Replace with the coded ETACS-ECU.
NO : The diagnosis is complete.

www.cargeek.ir

Code No.B2215 ECU internal error

JUDGMENT CRITERIA
When the ETACS-ECU internal error count reaches "255," the diagnosis code No. B2215 is set.

PROBABLE CAUSES
- Malfunction of the ETACS-ECU

DIAGNOSIS PROCEDURE
Replace the ETACS-ECU.

Code No.B222C Coding not completed

JUDGMENT CRITERIA
If the ETACS-ECU is in the initial state or the variant coding is incomplete, the ETACS-ECU sets the diagnosis code No. B222C.

PROBABLE CAUSES
- Variant code not written
- Malfunction of the ETACS-ECU

DIAGNOSIS PROCEDURE

M.U.T.-III diagnosis code
Check again if the diagnosis code is set to the ETACS-ECU.
(1) Perform the variant coding to the ETACS-ECU.
(2) Erase the diagnosis code.
(3) Turn the ignition switch from "LOCK" (OFF) position to "ON" position.
(4) Check if diagnosis code is set.

Q: Is the diagnosis code set?
YES : Replace with the coded ETACS-ECU.
NO : The diagnosis is complete.

www.cargeek.ir

www.CarGeek.ir

Code No.B2353 Ignition power supply (low input)
Code No.B2354 Ignition power supply (high input)

⚠ CAUTION

Before replacing the ECU, ensure that the input and output signal circuits are normal.

ETACS-ECU Power Source Circuit

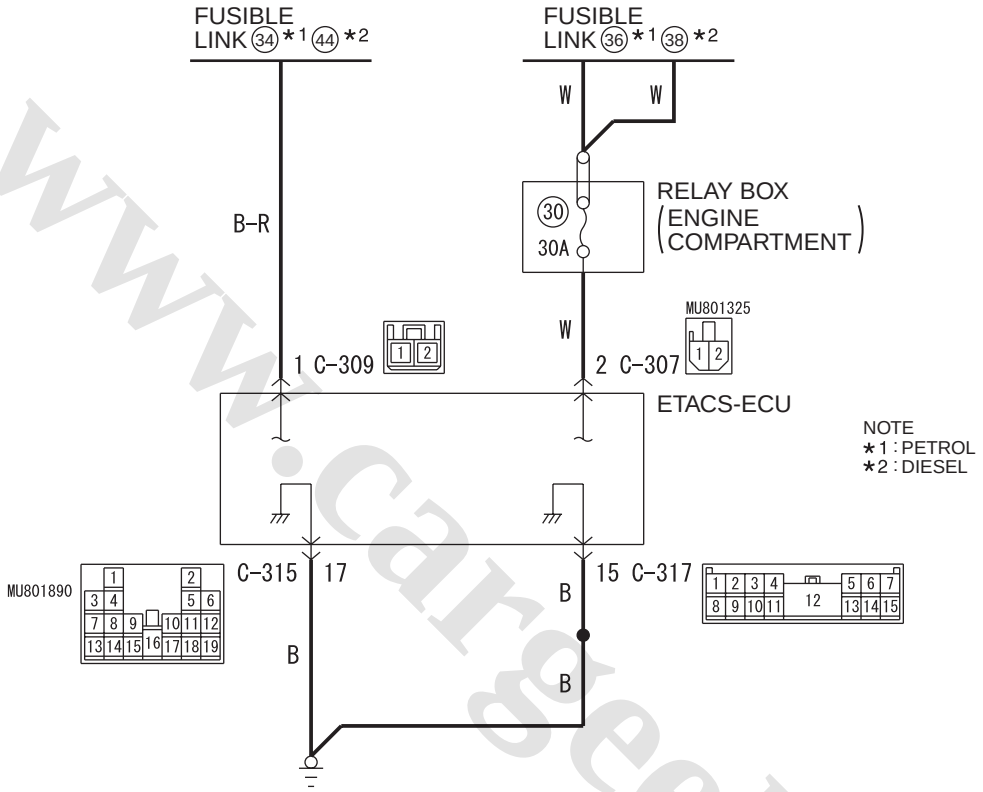

Wire colour code
B : Black LG : Light green G : Green L : Blue W : White Y : Yellow SB : Sky blue
BR : Brown O : Orange GR : Grey R : Red P : Pink V : Violet PU : Purple SI : Silver

WDH54E010A

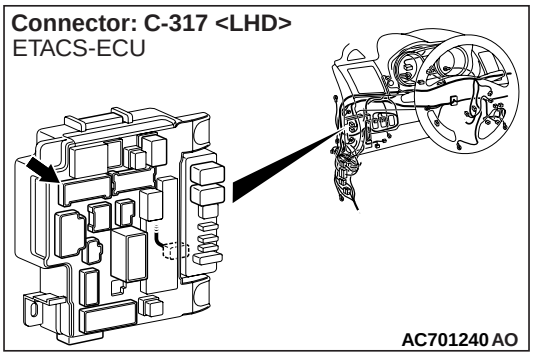

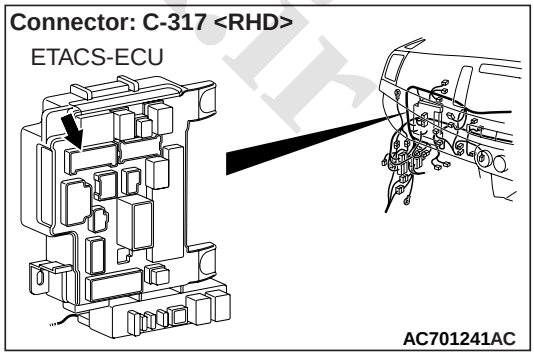

TROUBLE JUDGEMENT

These diagnosis codes are set when the IG voltage decreases to the specified value or less (code No. B2353) or increases to the specified value or more (code No. B2354). However, when the status returns to normal, the code Nos. B2353 and B2354 are automatically erased.

www.cargeek.ir

COMMENTS ON TROUBLE SYMPTOM
The power supply circuit or the ETACS-ECU may have a problem.

PROBABLE CAUSES
- Malfunction of power supply circuit
- Malfunction of battery
- Malfunction of alternator
- Malfunction of harness
- Malfunction of the ignition switch
- Malfunction of the ETACS-ECU

DIAGNOSIS PROCEDURE

STEP 1. M.U.T.-III data list
Check the IG voltage.
- Turn the ignition switch to the ON position.

Item No.	Item name	Normal condition
Item 254	IG voltage	System voltage

OK: Normal condition is displayed.

Q: Is the check result normal?
YES : Go to Step 7.
NO : Go to Step 2.

STEP 2. Battery check
Refer to GROUP 54A – Battery Test .

Q: Is the battery in good condition?
YES : Go to Step 3.
NO : Charge or replace the battery.

STEP 3. Charging system check
Refer to GROUP 16 – Charging System .

Q: Is the charging system in good condition?
YES : Go to Step 4.
NO : Repair or replace the charging system component(s).

STEP 4. Connector check: C-317 ETACS-ECU connector

Q: Is the check result normal?
YES : Go to Step 5.
NO : Repair the defective connector.

STEP 5. Voltage measurement at the C-317 ETACS-ECU connector.
(1) Measure by backprobing without disconnecting the connector.
(2) Turn the ignition switch to the "ON" position.
(3) Measure the voltage between the C-317 ETACS-ECU connector terminal No. 6 and the body earth.

OK: System voltage

Q: Is the check result normal?
YES : Go to Step 7.
NO : Go to Step 6.

STEP 6. Wiring harness check between the C-317 ETACS-ECU connector terminal No. 6 and the ignition switch (IG1)
Check the power supply line for open circuit and short circuit.

Q: Is the check result normal?
YES : Refer to Inspection Procedure 2 "Malfunction of the ignition switch power supply system."
NO : Repair the wiring harness.

STEP 7. Check whether the diagnosis code is reset.
Check again if the diagnosis code is set to the ETACS-ECU.
(1) Erase the diagnosis code.
(2) Turn the ignition switch from "LOCK" (OFF) position to "ON" position.
(3) Check if diagnosis code is set.

Q: Is the diagnosis code set?
YES : Replace the ETACS-ECU.
NO : The trouble can be an intermittent malfunction (GROUP 00 – How to use Troubleshooting/Inspection Service Points – How to Cope with Intermittent Malfunction).

DATA LIST REFERENCE TABLE

M1545001300624

NOTE: Some items are not displayed on M.U.T.-III according to the information in the ECU.

Item No.	M.U.T.-III display	Check condition	Normal condition
1	CAN-H voltage (CAN-C)	–	2.0–4.5 V
2	CAN-L voltage (CAN-C)	–	0.5–3.0 V
200	Original VIN writing status	When writing status is normal	Comp/Unperformed or Comp and locked
		When writing status is abnormal	ECU internal Err

www.cargeek.ir

www.CarGeek.ir

Item No.	M.U.T.-III display	Check condition	Normal condition
201	Current VIN writing status	When writing status is normal	Comp/Unperformed
		When writing status is abnormal	ECU internal Err
202	Internal error	When no error is present	No error
		When error is present	EEPROM error or Boot loader Err or EEPROM/Boot or ADC Error or ADC/ EEPROM error or ADC/Boot error or ADC/Boot/EEPROM or PLL Error or PLL/ EEPROM error or PLL/EEPROM error or PLL/Boot/ EEPROM or PLL/ ADC error or PLL/ ADC/EEPROM or PLL/ADC/Boot or PLL/ADC/Boot/ROM
203	Process error	When no error is present	No error
		When error is present	Interrupt error or Switch error or Sequence error or Stick pointer Err or Dispatch call Er or RAM error or Other error
204	Coding counter	–	0–255 times
205	Coding counter Option	–	0–255 times
206	Head lamp LO ON duty	When low-beam headlamps are on	100 %
		When headlamps (low-beam) are off	0 %
207	Fan control relay ON duty	When fan is in operation	100 %
		When fan is stopped	0 %
208	Room lamp ON duty	When room lamp is turned from ON to OFF	Lamp is dimmed from 100% (when ON) to 0%.
209	Gate lamp ON duty	When trunk is opened	100 %
		When trunk is closed	0 %
210	IG key illumination	When door is opened	100 %
		When door is closed	0 %
211	Head lamp Hi	When high-beam headlamps are on	ON
		When high-beam headlamps are off	OFF

www.cargeek.ir

www.CarGeek.ir

Item No.	M.U.T.-III display	Check condition	Normal condition
212	Front fog lamp	When front fog lamp is on	ON
		When front fog lamp is off	OFF
213	Horn theft horn	Not used	OFF
214	Head lamp washer	When headlamp washer is in operation	ON
		Other than above	OFF
215	Security indicator	When security alarm is active	ON
		When security alarm is not active	OFF
216	IG1-2 fuel pump	Ignition switch: ON position	ON
		Ignition switch: Other than ON position	OFF
218	Tail lamp	When tail lamp and position lamp are on	ON
		When tail lamp and position lamp are off	OFF
219	Turn RH/LH lamp	When turn-signal lamp is on	ON
		When turn-signal lamp is off	OFF
220	Blower fan relay	Ignition switch: ON position	ON
		Ignition switch: Other than ON position	OFF
221	Defogger	1. Engine: ON (2000 r/min) 2. Defogger switch: ON	ON
		Other than above	OFF
222	Interior lamp cut	When interior lamp is on	ON
		When the lamp is turned OFF by the activation of interior lamp automatic shutdown function	OFF
224	Door lock	When locking is performed by central door locking	ON
		Other than above	OFF
227	Door unlock	When unlocking is performed by central door locking	ON
		Other than above	OFF
228	Dr door unlock	When unlocking is performed by central door locking	ON
		Other than above	OFF
230	Trunk/gate opener	Trunk lid latch <LANCER> or Tailgate switch <LANCER SPORTBACK>: ON	ON
		Other than above	OFF
231	Rear fog lamp	When rear fog lamp is on	ON
		When rear fog lamp is off	OFF

www.cargeek.ir

www.CarGeek.ir

Item No.	M.U.T.-III display	Check condition	Normal condition
232	ACC Relay	Ignition switch: ACC or ON position	ON
		Ignition switch: Other than ACC and ON position	OFF
233	Fan Lo	When fan is in Lo operation	ON
		When fan is stopped	OFF
234	Fan Hi	When fan is in Hi operation	ON
		When fan is stopped	OFF
235	Front wiper ACT	When windshield wipers are in operation	ON
		Other than above	OFF
236	Front wiper Lo/Hi	When windshield wipers are in high-speed operation	ON
		Other than above	OFF
237	Front washer	When windshield washer is in operation	ON
		Other than above	OFF
238	Rear washer	When rear washer is in operation	ON
		Other than above	OFF
239	Rear wiper	When rear wiper is in operation	ON
		Other than above	OFF
240	Power window	Ignition switch: ON position	ON
		Ignition switch: OFF position	ON → OFF (30 seconds after turned)
241	Hold mirror open	Door mirror: Opened	ON
		Door mirror: Closed	OFF
242	Hold mirror close	Door mirror: Closed	ON
		Door mirror: Opened	OFF
243	Dead lock	When dead lock is in operation	ON
		Other than above	OFF
244	Independent DRL	Not used	OFF
251	Auto light sensor	Not used	–
252	Ambient temperature sensor	Ignition switch: ON position	0–5 V
253	Voltage sensing of IOD Line	Always	System voltage
254	IG voltage	Ignition switch: ON position	System voltage
256	Dr door ajar switch	Driver's door: Open	Open
		Driver's door: Closed	Close
257	As door ajar switch	Front passenger's door: Open	Open
		Front passenger's door: Closed	Close
258	RR door ajar switch	Rear right door: Open	Open
		Rear right door: Closed	Close

www.cargeek.ir

www.CarGeek.ir

Item No.	M.U.T.-III display	Check condition	Normal condition
259	RL door ajar switch	Rear left door: Open	Open
		Rear left door: Closed	Close
260	Trunk/gate trunk ajar switch	Trunk <LANCER> or Tailgate <LANCER SPORTBACK>: Open	Open
		Trunk <LANCER> or Tailgate <LANCER SPORTBACK>: Closed	Close
264	Handle lock switch	When the ignition key is inserted into the ignition key cylinder	Key in
		When the ignition key is removed from the ignition key cylinder	Key out
265	Hazard switch	While hazard switch is pressed	ON
		Other than above	OFF
266	Hood switch	Not used	OFF
267	Mirror switch	Remote-controlled mirror switch: ON (when the switch is operated)	ON
		Remote-controlled mirror switch: OFF (when the switch is not operated)	OFF
268	Trunk/gate opener switch	Not used	OFF
270	Dr door lock switch	When driver's door is locked	Lock
		Other than above	Not lock
271	Dr door unlock switch	When driver's door is unlocked	Unlock
		Other than above	Not Unlock
272	As door unlock switch	When front passenger's door is unlocked	Unlock
		Other than above	Not Unlock
273	Except Dr/As door unlock switch	Not used	OFF
274	Door key lock switch	Not used	OFF
275	Dr door key unlock switch	Not used	OFF
276	Door key unlock switch	Not used	OFF
277	Power lock switch	Power window main switch (door lock switch): Lock	ON
		Other than above	OFF
278	Power unlock switch	Power window main switch (door lock switch): Unlock	ON
		Other than above	OFF
279	Brake fluid switch	When brake fluid level is normal	ON
		When brake fluid level is low	OFF
280	Washer fluid/Trailer turn SW	Not used	OFF

www.cargeek.ir

www.CarGeek.ir

Item No.	M.U.T.-III display	Check condition	Normal condition
281	ASC/TCL OFF switch	ASC OFF switch: During ON operation	ON
		Other than above	OFF
283	ESS cancel switch	Not used	OFF
287	Starter switch	Ignition switch: START position	ON
		Ignition switch: Other than START position	OFF
288	ACC switch	Ignition switch: ACC or ON position	ON
		Ignition switch: Other than ACC and ON position	OFF
289	Backup lamp or shift reveres SW	Shift lever is in reverse position	ON
		Other than above	OFF
290	Brake switch	Brake pedal depressed	ON
		Other than above	OFF
291	Front wiper auto stop switch	When windshield wipers are in operation	ON
		Other than above	OFF
292	Rear wiper auto stop switch	When rear wiper is in operation	ON
		Other than above	OFF
293	Process error information	–	–
294	Process error	–	0–255 times
340	Head lamp switch(tail)	Lighting switch: Position lamp position	ON
		Other than above	OFF
341	Head lamp switch	Lighting switch: During dimmer switch operation	ON
		Other than above	OFF
342	Head lamp switch(Dimmer)	Lighting switch: High beam position	ON
		Other than above	OFF
343	Turn switch left	Turn-signal lamp switch: LH position	ON
		Other than above	OFF
344	Turn switch right	Turn-signal lamp switch: RH position	ON
		Other than above	OFF
345	Fog lamp ON	Fog lamp switch: During ON operation	ON
		Other than above	OFF
346	Fog lamp OFF	Fog lamp switch: During OFF operation	ON
		Other than above	OFF

www.cargeek.ir

www.CarGeek.ir

Item No.	M.U.T.-III display	Check condition	Normal condition
347	Switch type	Left hand drive	LHD
		Right hand drive	RHD
348	Head lamp switch(auto)	Lighting switch: AUTO position	ON
		Other than above	OFF
349	Head lamp cleaner	Lighting switch: Headlamp washer switch operation	ON
		Other than above	OFF
350	Head lamp switch(flasher)	Lighting switch: During dimmer switch operation	ON
		Other than above	OFF
351	Column ECU sleep	Ignition switch: Other than ON and START position	OK
		Ignition switch: ON or START position	NG
352	Front wiper(INT)	Wiper switch: INT position	ON
		Other than above	OFF
353	Front wiper(LO)	Wiper switch: LO position	ON
		Other than above	OFF
354	Front wiper(HI)	Wiper switch: HI position	ON
		Other than above	OFF
355	Front wiper(washer)	Wiper switch: During washer operation	ON
		Other than above	OFF
356	Rear wiper	Wiper switch: rear wiper position	ON
		Other than above	OFF
357	Rear wiper(washer)	Wiper switch: rear washer position	ON
		Other than above	OFF
358	Front wiper(MIST)	Wiper switch: During MIST operation	ON
		Other than above	OFF
359	Front wiper(interval volume)	Variable intermittent wiper control switch is switched from (+) to (–).	Value changes from 0 (+) to 254 (–).
360	Wiper switch lever fail	When normal	Normal
		When abnormality is present	Fail
361	Turn/Lamp switch lever fail	When normal	Normal
		When abnormality is present	Fail
400	Indirect lamp switch	Not used	OFF

www.cargeek.ir

www.CarGeek.ir

Item No.	M.U.T.-III display	Check condition	Normal condition
401	Indirect lamp	Not used	–
403	Shift Lock solenoid fail flag	When a problem is present (short to power supply)	ON
		Other than above	OFF

TROUBLE SYMPTOM CHART

M1545001200199

Trouble symptom	Reference page
Malfunction of ETACS-ECU power supply circuit	

SYMPTOM PROCEDURES

Malfunction of ETACS-ECU power supply circuit

ETACS-ECU Power Source Circuit

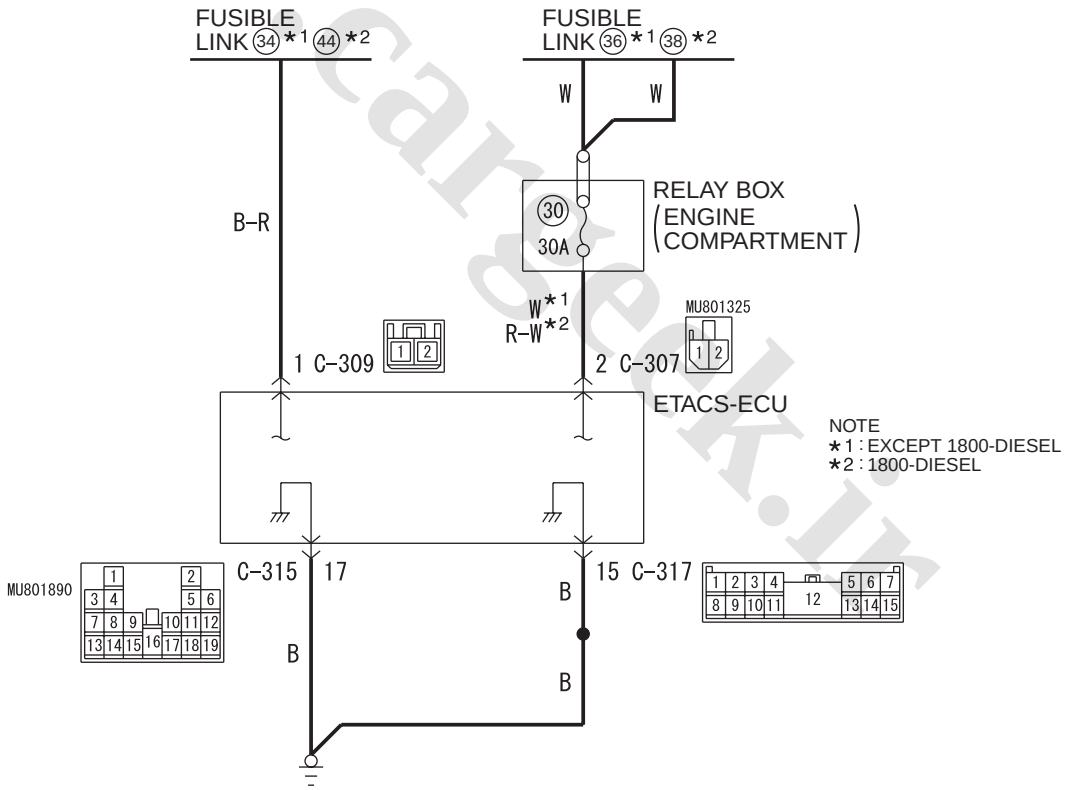

Wire colour code
B : Black LG : Light green G : Green L : Blue W : White Y : Yellow SB : Sky blue
BR : Brown O : Orange GR : Grey R : Red P : Pink V : Violet PU : Purple SI : Silver

WBH54E084A

www.cargeek.ir

www.CarGeek.ir

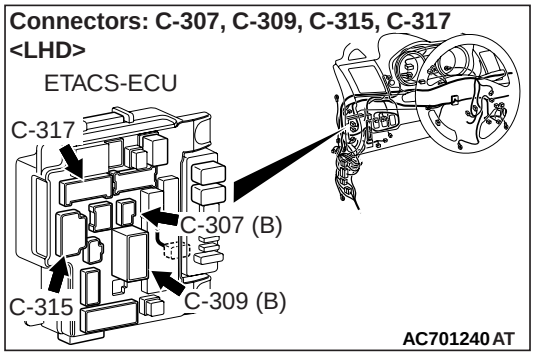

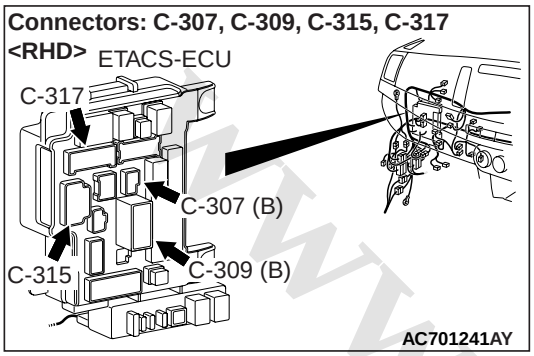

COMMENTS ON TROUBLE SYMPTOM

If the ETACS-ECU functions do not work at all, the ETACS-ECU power supply system, earth system, or ETACS-ECU may have a problem.

PROBABLE CAUSES

- Damaged harness wires and connectors
- Malfunction of the ETACS-ECU

DIAGNOSIS PROCEDURE

STEP 1. Connector check: C-315, C-317 ETACS-ECU connector

Q: Is the check result normal?

YES : Go to Step 2.
NO : Repair the defective connector.

STEP 2. Resistance measurement at the C-315 and C-317 ETACS-ECU connector.

(1) Disconnect the connector, and measure at the wiring harness side.
(2) Measure the resistance between the C-315 ETACS-ECU connector terminal No. 17 and the body earth.

OK: Continuity exists (2 Ω or less)

(3) Measure the resistance between the C-317 ETACS-ECU connector terminal No. 15 and the body earth.

OK: Continuity exists (2 Ω or less)

Q: Is the check result normal?

YES : Go to Step 4.
NO : Go to Step 3.

STEP 3. Wiring harness check between the C-315 or C-317 ETACS-ECU connector terminal No. 17 or 15 and the body earth

- Check the earth wires for open circuit.

Q: Is the check result normal?

YES : The trouble can be an intermittent malfunction (Refer to GROUP 00 – How to use Troubleshooting/inspection Service Points – How to Cope with Intermittent Malfunction).
NO : Repair the wiring harness.

STEP 4. Connector check: C-307 and C-309 ETACS-ECU connector

Q: Is the check result normal?

YES : Go to Step 5.
NO : Repair the defective connector.

STEP 5. Voltage measurement at the C-307 ETACS-ECU connector.

(1) Disconnect the connector, and measure at the wiring harness side.
(2) Measure the voltage between the C-307 ETACS-ECU connector terminal No. 2 and the body earth.

OK: System voltage

Q: Is the check result normal?

YES : Go to Step 7.
NO : Go to Step 6.

STEP 6. Wiring harness check between the C-307 ETACS-ECU connector terminal No. 2 and the fusible link (36) <except 1800-Diesel> or (38) <1800-Diesel>.

- Check the power supply line for open circuit.

Q: Is the check result normal?

YES : The trouble can be an intermittent malfunction (Refer to GROUP 00 – How to use Troubleshooting/inspection Service Points – How to Cope with Intermittent Malfunction).
NO : Repair the wiring harness.

STEP 7. Voltage measurement at the C-309 ETACS-ECU connector.

(1) Disconnect the connector, and measure at the wiring harness side.
(2) Measure the voltage between the C-309 ETACS-

www.cargeek.ir

www.CarGeek.ir

ECU connector terminal No. 1 and the body earth.

OK: System voltage

Q: Is the check result normal?
YES : Go to Step 9.
NO : Go to Step 8.

STEP 8. Wiring harness check between the C-309 ETACS-ECU connector terminal No. 1 and the fusible link (34) <except 1800-Diesel> or (44) <1800-Diesel>.

- Check the power supply line for open circuit.

Q: Is the check result normal?
YES : The trouble can be an intermittent malfunction (Refer to GROUP 00 – How to use Troubleshooting/inspection Service Points – How to Cope with Intermittent Malfunction).
NO : Repair the wiring harness.

STEP 9. Retest the system

Check that the ETACS-ECU functions work normally.

Q: Is the check result normal?
YES : The trouble can be an intermittent malfunction (Refer to GROUP 00 – How to use Troubleshooting/inspection Service Points – How to Cope with Intermittent Malfunction).
NO : Replace the ETACS-ECU.

TROUBLE SYMPTOM CHART FOR INPUT SIGNAL

M1545004900540

Trouble symptom		Inspection Procedure No.	Reference page
The ignition switch (ACC) signal is not received.		1	
The ignition switch (IG1) signal is not received.		2	
The key reminder switch signal is not received.		3	
The front door lock actuator signal is not received.	LH drive vehicles	4	
	RH drive vehicles		
The front door switch (driver's side) signal is not received.		5	
The front door switch (passenger's side) signal is not received.		6	
The rear door switch (RH) signal is not received.		7	
The rear door switch (LH) signal is not received.		8	
The trunk lid latch signal is not received.	LANCER	9	
The tailgate switch signal is not received.	LANCER SPORTBACK		
The hazard warning lamp switch signal is not received.		10	
The column switch signal is not received.		11	
The hood latch switch signal is not received.		12	
The stop lamp switch signal is not received.		13	

www.cargeek.ir

www.CarGeek.ir

INPUT SIGNAL PROCEDURES

Inspection Procedure 1: The ignition switch (ACC) signal is not received.

⚠ CAUTION

Before replacing the ECU, ensure that the power supply circuit, the earth circuit and the communication circuit are normal.

Ignition Switch (ACC) Input Circuit

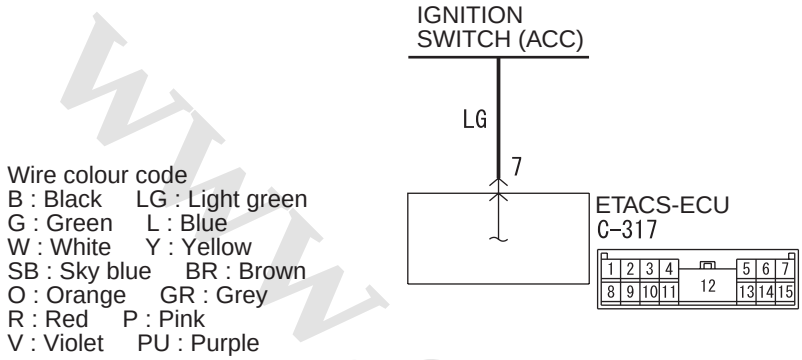

W6G54X050A

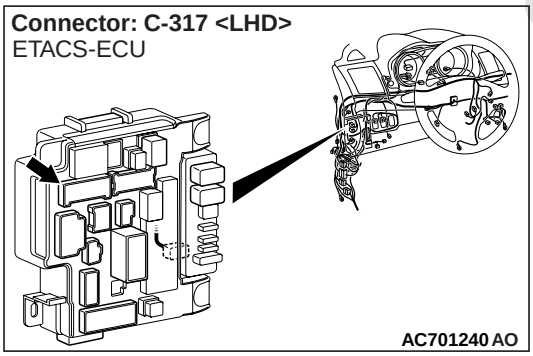

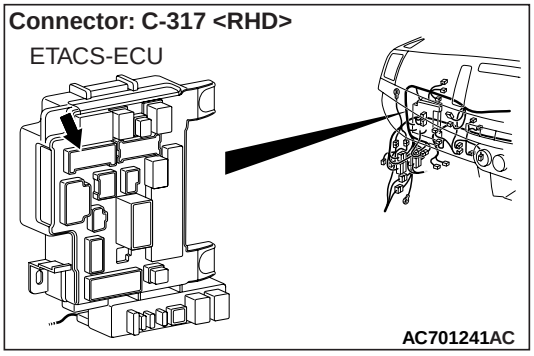

COMMENTS ON TROUBLE SYMPTOM

If there is an error to the ignition switch (ACC) input signal, or the ACC relay inside the ETACS-ECU does not operate, the ignition switch (ACC) signal is no longer output to the communication line.

PROBABLE CAUSES

- Malfunction of the ETACS-ECU
- Malfunction of the ignition switch
- Damaged harness wires and connectors

DIAGNOSIS PROCEDURE

STEP 1. Connector check: C-317 ETACS-ECU connector

Q: Is the check result normal?
YES : Go to Step 2.
NO : Repair the defective connector.

STEP 2. Voltage measurement at the C-317 ETACS-ECU connector.

(1) Measure by backprobing without disconnecting the connector.
(2) Turn the ignition switch to the "ACC" position.
(3) Measure the voltage between the C-317 ETACS-ECU connector terminal No. 7 and the body earth.

OK: System voltage

Q: Is the check result normal?
YES : Go to Step 4.
NO : Go to Step 3.

www.cargeek.ir

www.CarGeek.ir

STEP 3. Wiring harness check between the C-317 ETACS-ECU connector terminal No. 7 and the ignition switch (ACC)

- Check the power supply (ACC) line for open circuit and short circuit.

Q: Is the check result normal?

YES : Troubleshoot the ignition switch. Refer to Inspection Procedure 2 "Malfunction of the ignition switch power supply system."

NO : Repair the wiring harness.

STEP 4. M.U.T.-III data list

- Turn the ignition switch to the ACC position.

Item No.	Item name	Normal condition
Item 288	ACC switch	ON

OK: Normal condition is displayed.

Q: Is the check result normal?

YES : The trouble can be an intermittent malfunction (Refer to GROUP 00 – How to use Troubleshooting/inspection Service Points – How to Cope with Intermittent Malfunction).

NO : Replace the ETACS-ECU.

Inspection Procedure 2: The ignition switch (IG1) signal is not received.

⚠ CAUTION

Before replacing the ECU, ensure that the power supply circuit, the earth circuit and the communication circuit are normal.

Ignition Switch (IG1) Input Circuit

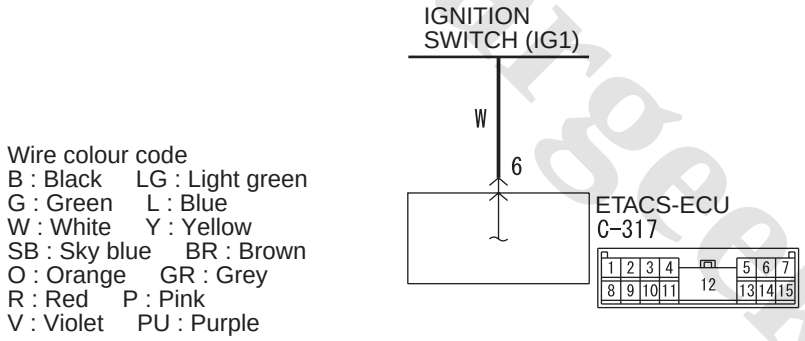

W6G54X048A

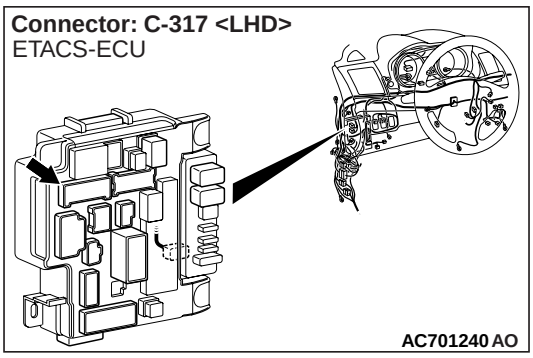

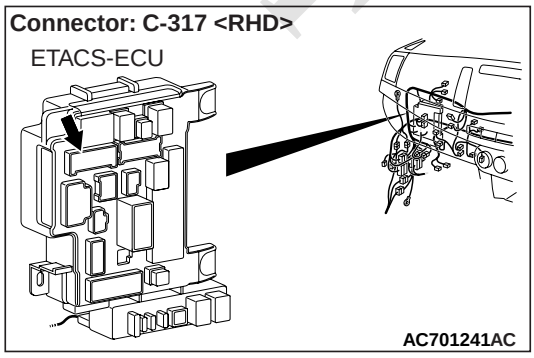

www.cargeek.ir

www.CarGeek.ir

COMMENTS ON TROUBLE SYMPTOM
If there is an error to the ignition switch (IG1) input signal, or the IG relay inside the ETACS-ECU does not operate, the ignition switch (IG1) signal is no longer output to the communication line.

PROBABLE CAUSES
- Malfunction of the ignition switch
- Malfunction of the ETACS-ECU
- Malfunction of fuse
- Damaged harness wires and connectors

DIAGNOSIS PROCEDURE

STEP 1. Connector check: C-317 ETACS-ECU connector

Q: Is the check result normal?
YES : Go to Step 2.
NO : Repair the defective connector.

STEP 2. Voltage measurement at the C-317 ETACS-ECU connector.
(1) Measure by backprobing without disconnecting the connector.
(2) Turn the ignition switch to the "ON" position.
(3) Measure the voltage between the C-317 ETACS-ECU connector terminal No. 6 and the body earth.

OK: System voltage

Q: Is the check result normal?
YES : Go to Step 4.
NO : Go to Step 3.

STEP 3. Wiring harness check between the C-317 ETACS-ECU connector terminal No. 6 and the ignition switch (IG1)
Check the power supply (IG1) line for open circuit and short circuit.

Q: Is the check result normal?
YES : Troubleshoot the ignition switch. Refer to Inspection Procedure 2 "Malfunction of the ignition switch power supply system."
NO : Repair the wiring harness.

STEP 4. M.U.T.-III data list
Turn the ignition switch to the ON position.

Item No.	Item name	Normal condition
Item 254	IG voltage	System voltage

OK: Normal condition is displayed.

Q: Is the check result normal?
YES : The trouble can be an intermittent malfunction (Refer to GROUP 00 – How to use Troubleshooting/inspection Service Points – How to Cope with Intermittent Malfunction).
NO : Replace the ETACS-ECU.

www.cargeek.ir
www.cargeek.ir

www.CarGeek.ir

Inspection Procedure 3: The key reminder switch signal is not received.

⚠ CAUTION

Before replacing the ECU, ensure that the power supply circuit, the earth circuit and the communication circuit are normal.

Key Reminder Switch Input Circuit

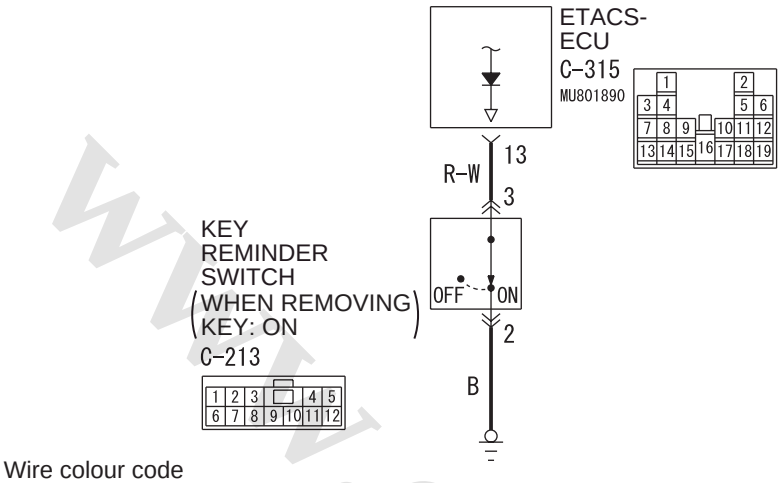

Wire colour code
B : Black LG : Light green G : Green L : Blue W : White Y : Yellow SB : Sky blue
BR : Brown O : Orange GR : Grey R : Red P : Pink V : Violet PU : Purple SI : Silver

W8G54X042A

Connector: C-213 <LHD>

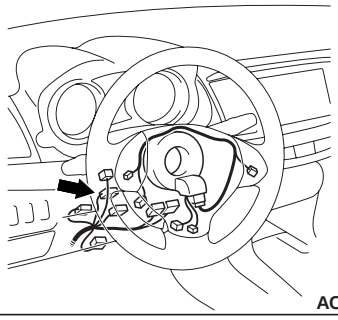

AC612708AU

Connector: C-315 <LHD>
ETACS-ECU

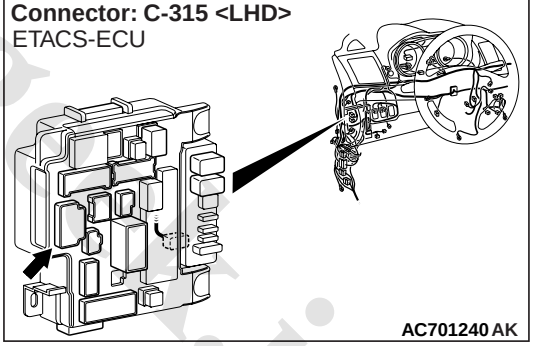

AC701240AK

Connector: C-213 <RHD>

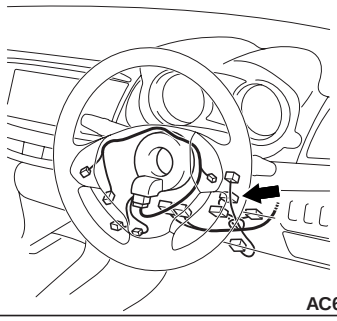

AC612716AL

Connector: C-315 <RHD>
ETACS-ECU

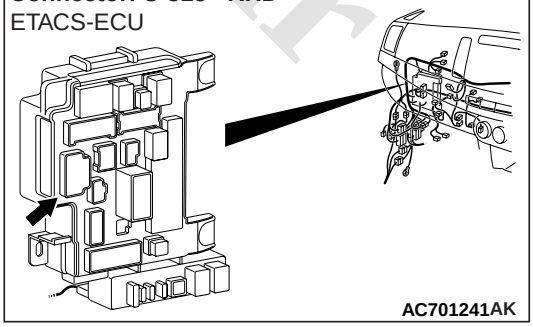

AC701241AK

COMMENTS ON TROUBLE SYMPTOM

The key reminder switch input signal is used for the operation judgment of the functions below. If the signal is abnormal, these functions will not work.

- Central door locking
- Keyless entry system

www.cargeek.ir

- KOS
- Ignition key cylinder illumination lamp
- Room lamp

PROBABLE CAUSES

- Malfunction of the key reminder switch
- Malfunction of the ETACS-ECU
- Damaged harness wires and connectors

DIAGNOSIS PROCEDURE

STEP 1. Connector check: C-213 key reminder switch connector

Q: Is the check result normal?
YES : Go to Step 2.
NO : Repair the defective connector.

STEP 2. Check the key reminder switch.
Check the key reminder switch. Refer to .

Q: Is the check result normal?
YES : Go to Step 3.
NO : Replace the key reminder switch.

STEP 3. Resistance measurement at the C-213 key reminder switch connector
(1) Disconnect the connector, and measure at the wiring harness side.
(2) Measure the resistance between the C-213 key reminder switch connector terminal No. 2 and the body earth.

OK: Continuity exists (2 Ω or less)

Q: Is the check result normal?
YES : Go to Step 5.
NO : Go to Step 4.

STEP 4. Wiring harness check from C-213 key reminder switch connector terminal No. 2 to body earth
Check the earth wire for open circuit.

Q: Is the check result normal?
YES : The trouble can be an intermittent malfunction (Refer to GROUP 00 – How to use Troubleshooting/inspection Service Points – How to Cope with Intermittent Malfunction).
NO : Repair the wiring harness.

STEP 5. Connector check: C-315 ETACS-ECU connector

Q: Is the check result normal?
YES : Go to Step 6.
NO : Repair the defective connector.

STEP 6. Wiring harness check between the C-213 key reminder switch connector terminal No. 3 and the C-315 ETACS-ECU connector terminal No. 13
Check the output line for open circuit.

Q: Is the check result normal?
YES : Go to Step 7.
NO : Repair the wiring harness.

STEP 7. M.U.T.-III data list
Turn the ignition switch to the OFF (key inserted) position.

Item No.	Item name	Normal condition
Item 264	Handle lock switch	Key in

OK: Normal condition is displayed.

Q: Is the check result normal?
YES : The trouble can be an intermittent malfunction (Refer to GROUP 00 – How to use Troubleshooting/inspection Service Points – How to Cope with Intermittent Malfunction).
NO : Replace the ETACS-ECU.

www.cargeek.ir

www.CarGeek.ir

Inspection Procedure 4: The front door lock actuator signal is not received. <LH drive vehicles>

⚠ CAUTION

Before replacing the ECU, ensure that the power supply circuit, the earth circuit and the communication circuit are normal.

Door Look Actuator Signal Input Circuit

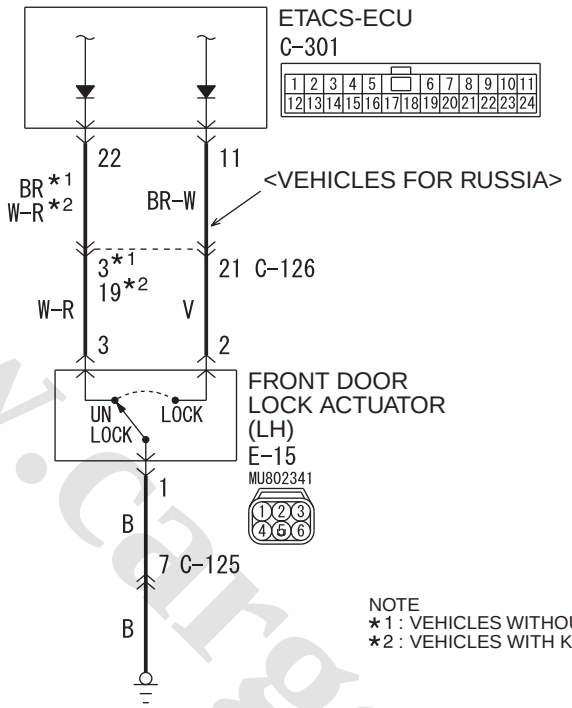

NOTE
*1 : VEHICLES WITHOUT KEYLESS ENTRY SYSTEM
*2 : VEHICLES WITH KEYLESS ENTRY SYSTEM

Wire colour code
B : Black LG : Light green G : Green L : Blue W : White Y : Yellow SB : Sky blue
BR : Brown O : Orange GR : Grey R : Red P : Pink V : Violet PU : Purple SI : Silver

WDH54E011A

Connector: C-301 <LHD>
ETACS-ECU

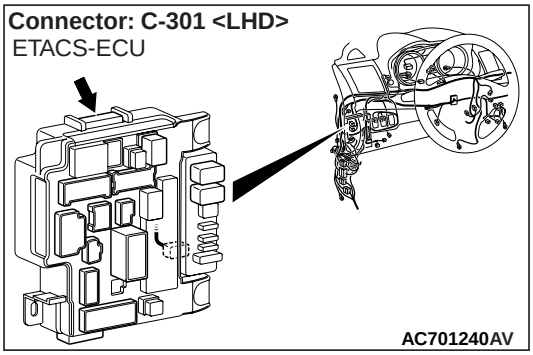

AC701240AV

Connector: E-15 <LHD>

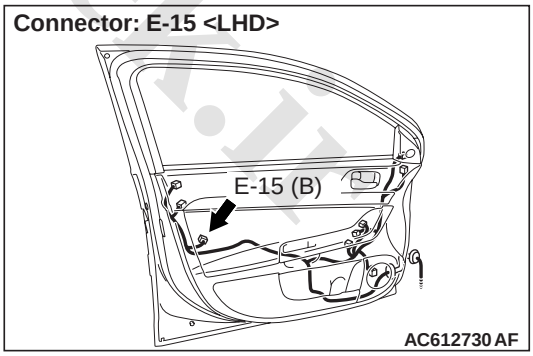

AC612730AF

COMMENTS ON TROUBLE SYMPTOM

The front door lock actuator (LH) input signal is used for the operation judgment of the functions below. If the signal is abnormal, these functions will not work normally.

- Central door locking
- KOS
- Keyless entry system
- Room lamp

www.cargeek.ir

PROBABLE CAUSES

- Malfunction of the front door lock actuator (LH)
- Malfunction of the ETACS-ECU
- Damaged harness wires and connectors

DIAGNOSIS PROCEDURE

STEP 1.Connector check: E-15 front door lock actuator (LH) connector

Q: Is the check result normal?
YES : Go to Step 2.
NO : Repair the defective connector.

STEP 2. Front door lock actuator (LH) check
Refer to GROUP 42A – Door .

Q: Is the check result normal?
YES : Go to Step 3.
NO : Replace the front door lock actuator (LH).

STEP 3. Resistance measurement at the E-15 front door lock actuator (LH) connector
(1) Disconnect the connector, and measure at the wiring harness side.
(2) Measure the resistance between the E-15 front door lock actuator (LH) connector terminal No. 1 and the body earth.

OK: Continuity exists (2 Ω or less)

Q: Is the check result normal?
YES : Go to Step 5.
NO : Go to Step 4.

STEP 4. Wiring harness check between the E-15 front door lock actuator (LH) connector terminal No. 1 and the body earth
Check the earth wires for open circuit.

NOTE: Prior to the wiring harness inspection, check intermediate connector C-125, and repair if necessary.

Q: Is the check result normal?
YES : The trouble can be an intermittent malfunction (Refer to GROUP 00 – How to use Troubleshooting/inspection Service Points – How to Cope with Intermittent Malfunction).
NO : Repair the wiring harness.

STEP 5. Connector check C-301 ETACS-ECU connector

Q: Is the check result normal?
YES : Go to Step 6.
NO : Repair the defective connector.

STEP 6. Wiring harness check between the E-15 front door lock actuator (LH) connector terminal No. 2, 3 and the C-301 ETACS-ECU connector terminal No. 11, 22.
Check the input line for open circuit.

NOTE: Prior to the wiring harness inspection, check intermediate connector C-126, and repair if necessary.

Q: Is the check result normal?
YES : Go to Step 7.
NO : Repair the wiring harness.

STEP 7. M.U.T.-III data list
Change the status of driver's door from unlocked to locked.

Item No.	Item name	Normal condition
Item 270*	Dr door lock switch	Not lock → Lock
Item 271	Dr door unlock switch	Unlock → Not Unlock

*NOTE: *: Vehicles for RUSSIA*

OK: Normal condition is displayed.

Q: Is the check result normal?
YES : The trouble can be an intermittent malfunction (Refer to GROUP 00 – How to use Troubleshooting/inspection Service Points – How to Cope with Intermittent Malfunction).
NO : Replace the ETACS-ECU.

www.cargeek.ir

www.CarGeek.ir

Inspection Procedure 4: The front door lock actuator signal is not received. <RH drive vehicles>

⚠ CAUTION

Before replacing the ECU, ensure that the power supply circuit, the earth circuit and the communication circuit are normal.

Door Look Actuator Signal Input Circuit

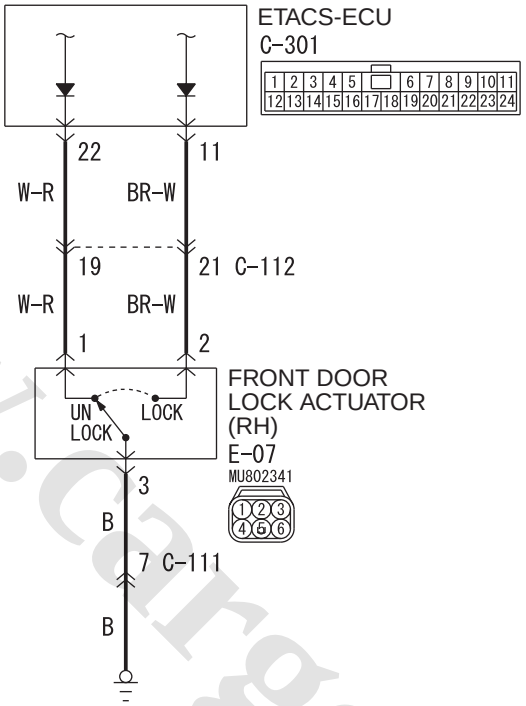

Wire colour code
B : Black LG : Light green G : Green L : Blue W : White Y : Yellow SB : Sky blue
BR : Brown O : Orange GR : Grey R : Red P : Pink V : Violet PU : Purple SI : Silver

WDH54E012A

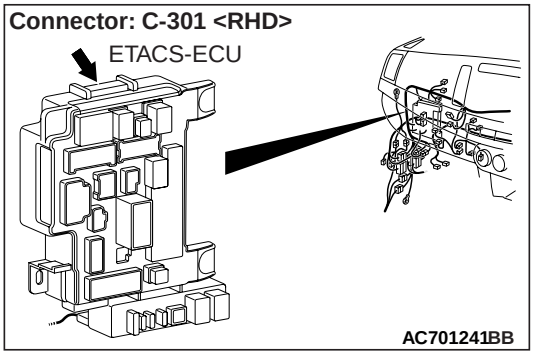

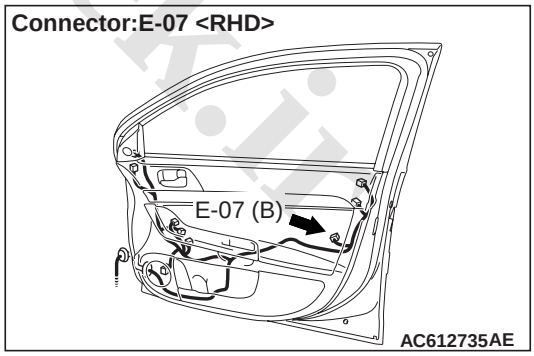

COMMENTS ON TROUBLE SYMPTOM

The front door lock actuator (RH) input signal is used for the operation judgement of the functions below. If the signal is abnormal, these functions will not work normally.

- Central door locking
- KOS
- Keyless entry system
- Room lamp

www.cargeek.ir

www.CarGeek.ir

PROBABLE CAUSES

- Malfunction of the front door lock actuator (RH)
- Malfunction of the ETACS-ECU
- Damaged harness wires and connectors

DIAGNOSIS PROCEDURE

STEP 1.Connector check: E-07 front door lock actuator (RH) connector

Q: Is the check result normal?
YES : Go to Step 2.
NO : Repair the defective connector.

STEP 2. Front door lock actuator (RH) check
Refer to GROUP 42A – Door .

Q: Is the check result normal?
YES : Go to Step 3.
NO : Replace the front door lock actuator (RH).

STEP 3. Resistance measurement at the E-07 front door lock actuator (RH) connector
(1) Disconnect the connector, and measure at the wiring harness side.
(2) Measure the resistance between the E-07 front door lock actuator (RH) connector terminal No. 3 and the body earth.

OK: Continuity exists (2 Ω or less)

Q: Is the check result normal?
YES : Go to Step 5.
NO : Go to Step 4.

STEP 4. Wiring harness check between the E-07 front door lock actuator (RH) connector terminal No. 3 and the body earth
Check the earth wires for open circuit.

NOTE: Prior to the wiring harness inspection, check intermediate connector C-111, and repair if necessary.

Q: Is the check result normal?
YES : The trouble can be an intermittent malfunction (Refer to GROUP 00 – How to use Troubleshooting/inspection Service Points – How to Cope with Intermittent Malfunction).
NO : Repair the wiring harness.

STEP 5. Connector check C-301 ETACS-ECU connector

Q: Is the check result normal?
YES : Go to Step 6.
NO : Repair the defective connector.

STEP 6. Wiring harness check between the E-07 front door lock actuator (RH) connector terminal No. 1, 2 and the C-301 ETACS-ECU connector terminal No. 22, 11.
Check the input line for open circuit.

NOTE: Prior to the wiring harness inspection, check intermediate connector C-112, and repair if necessary.

Q: Is the check result normal?
YES : Go to Step 7.
NO : Repair the wiring harness.

STEP 7. M.U.T.-III data list
Change the status of driver's door from unlocked to locked.

Item No.	Item name	Normal condition
Item 270	Dr door lock switch	Not lock → Lock
Item 271	Dr door unlock switch	Unlock → Not Unlock

OK: Normal condition is displayed.

Q: Is the check result normal?
YES : The trouble can be an intermittent malfunction (Refer to GROUP 00 – How to use Troubleshooting/inspection Service Points – How to Cope with Intermittent Malfunction).
NO : Replace the ETACS-ECU.

www.cargeek.ir

www.CarGeek.ir

Inspection Procedure 5: The front door switch (driver's side) signal is not received.

⚠ CAUTION

Before replacing the ECU, ensure that the power supply circuit, the earth circuit and the communication circuit are normal.

Front Door Switch (Driver's Side) Input Circuit

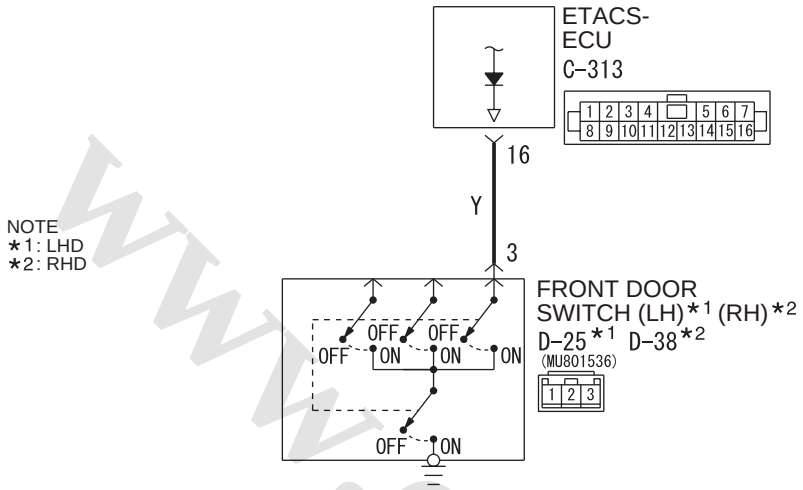

Wire colour code
B : Black LG : Light green G : Green L : Blue W : White Y : Yellow SB : Sky blue
BR : Brown O : Orange GR : Grey R : Red P : Pink V : Violet PU : Purple SI : Silver

W8G54E073A

Connector: C-313 <LHD>
ETACS-ECU

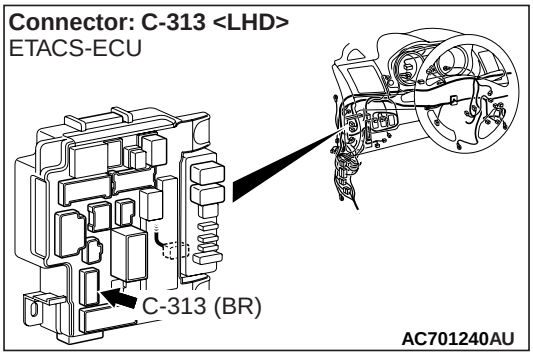

Connector: D-25

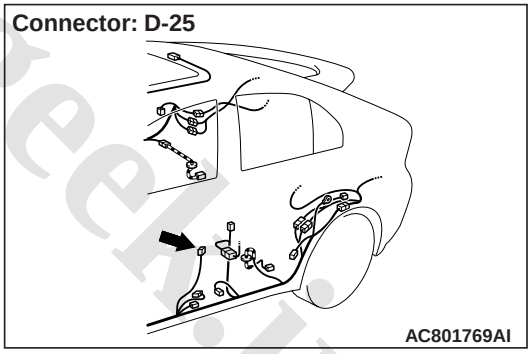

Connector: C-313 <RHD>
ETACS-ECU

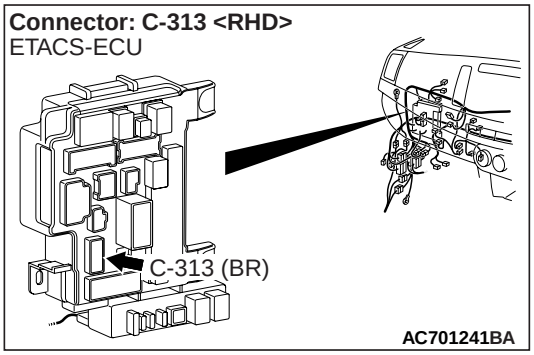

Connector: D-38

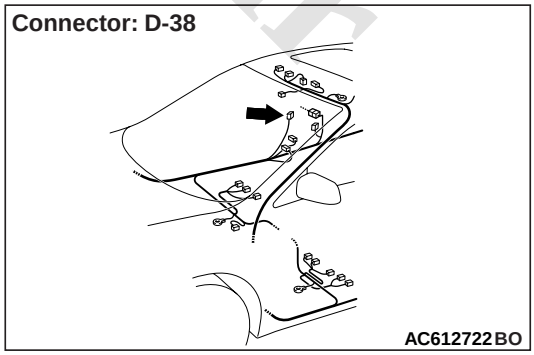

COMMENTS ON TROUBLE SYMPTOM

If there is an error to the front door switch (driver's side) input signal, the front door switch (driver's side) signal is no longer output to the communication line.

www.cargeek.ir

www.CarGeek.ir

PROBABLE CAUSES

- Malfunction of front door switch (LH) <LH drive vehicles>
- Malfunction of front door switch (RH) <RH drive vehicles>
- Malfunction of the ETACS-ECU
- Damaged harness wires and connectors

DIAGNOSIS PROCEDURE

STEP 1. Check the installation condition.
Check that the front door switch (LH) <LH drive vehicles> or (RH) <RH drive vehicles> is installed to the body correctly.

Q: Is the check result normal?
YES : Go to Step 2.
NO : Correct the installation condition.

STEP 2. Connector check: D-25 front door switch (LH) <LH drive vehicles> or D-38 front door switch (RH) <RH drive vehicles> connector

Q: Is the check result normal?
YES : Go to Step 3.
NO : Repair the defective connector.

STEP 3. Front door switch (LH) <LH drive vehicles> or (RH) <RH drive vehicles> check
Refer to GROUP 42A – Door .

Q: Is the check result normal?
YES : Go to Step 4.
NO : Replace the front door switch (LH) <LH drive vehicles> or (RH) <RH drive vehicles>.

STEP 4. Connector check: C-313 ETACS-ECU connector

Q: Is the check result normal?
YES : Go to Step 5.
NO : Repair the defective connector.

STEP 5. Wiring harness check between the D-25 front door switch (LH) <LH drive vehicles> or D-38 front door switch (RH) <RH drive vehicles> connector terminal No. 3 and the C-313 ETACS-ECU connector terminal No. 16
Check the input lines for open circuit and short circuit.

Q: Is the check result normal?
YES : Go to Step 6.
NO : Repair the wiring harness.

STEP 6. M.U.T.-III data list
Open the driver's door.

Item No.	Item name	Normal condition
Item 256	Dr door ajar switch	Open

OK: Normal condition is displayed.

Q: Is the check result normal?
YES : The trouble can be an intermittent malfunction (Refer to GROUP 00 – How to use Troubleshooting/inspection Service Points – How to Cope with Intermittent Malfunction).
NO : Replace the ETACS-ECU.

www.cargeek.ir

www.CarGeek.ir

Inspection Procedure 6: The front door switch (passenger's side) signal is not received.

⚠ CAUTION

Before replacing the ECU, ensure that the power supply circuit, the earth circuit and the communication circuit are normal.

Front Door Switch (Passenger's Side) Input Circuit

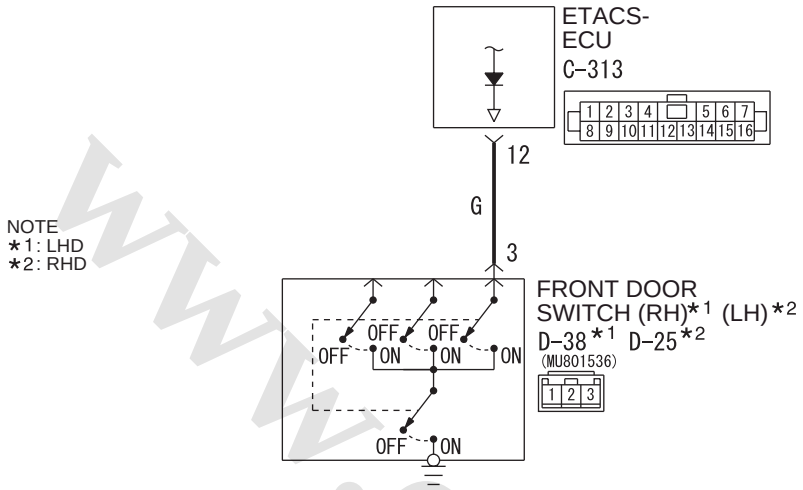

Wire colour code
B : Black LG : Light green G : Green L : Blue W : White Y : Yellow SB : Sky blue
BR : Brown O : Orange GR : Grey R : Red P : Pink V : Violet PU : Purple SI : Silver

W8G54E074A

Connector: C-313 <LHD>
ETACS-ECU

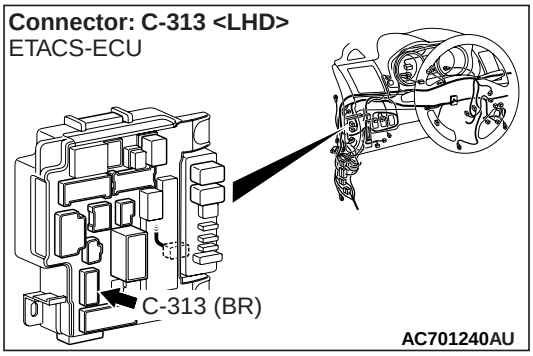

AC701240AU

Connector: D-25

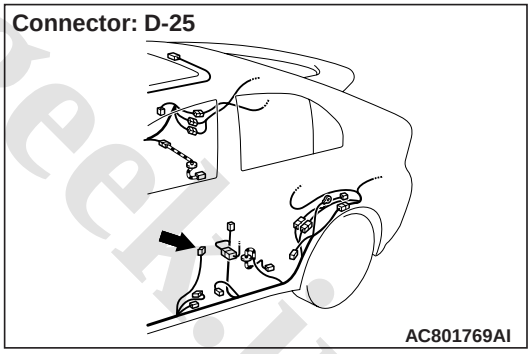

AC801769AI

Connector: C-313 <RHD>
ETACS-ECU

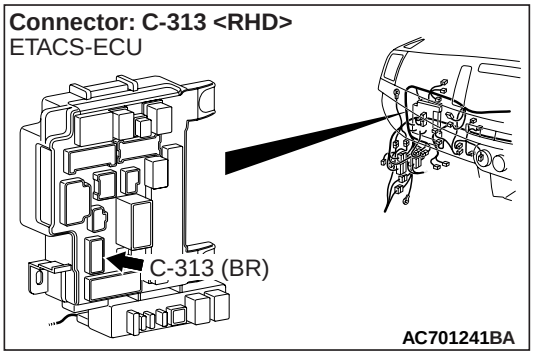

AC701241BA

Connector: D-38

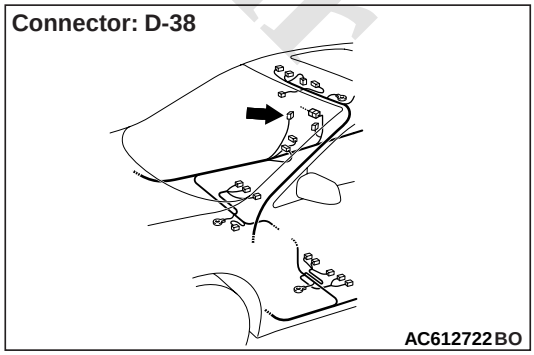

AC612722BO

COMMENTS ON TROUBLE SYMPTOM

If there is an error to the front door switch (passenger's side) input signal, the door switch (passenger's side) signal is no longer output to the communication line.

www.cargeek.ir

www.CarGeek.ir

PROBABLE CAUSES

- Malfunction of front door switch (RH) <LH drive vehicles>
- Malfunction of front door switch (LH) <RH drive vehicles>
- Malfunction of the ETACS-ECU
- Damaged harness wires and connectors

DIAGNOSIS PROCEDURE

STEP 1. Check the installation condition.

Check that the front door switch (RH) <LH drive vehicles> or (LH) <RH drive vehicles> is installed to the body correctly.

Q: Is the check result normal?

YES : Go to Step 2.
NO : Correct the installation condition.

STEP 2. Connector check: D-38 front door switch (RH) <LH drive vehicles> or D-25 front door switch (LH) <RH drive vehicles> connector

Q: Is the check result normal?

YES : Go to Step 3.
NO : Repair the defective connector.

STEP 3. Front door switch (RH) <LH drive vehicles> or (LH) <RH drive vehicles> check

Refer to GROUP 42A – Door .

Q: Is the check result normal?

YES : Go to Step 4.
NO : Replace the front door switch (RH) <LH drive vehicles> or (LH) <RH drive vehicles>.

STEP 4. Connector check: C-313 ETACS-ECU connector

Q: Is the check result normal?

YES : Go to Step 5.
NO : Repair the defective connector.

STEP 5. Wiring harness check between the D-38 front door switch (RH) <LH drive vehicles> or D-25 front door switch (LH) <RH drive vehicles> connector terminal No. 3 and the C-313 ETACS-ECU connector terminal No. 16

Check the input lines for open circuit and short circuit.

Q: Is the check result normal?

YES : Go to Step 6.
NO : Repair the wiring harness.

STEP 6. M.U.T.-III data list

Open the front passenger's door.

Item No.	Item name	Normal condition
Item 257	As door ajar switch	Open

OK: Normal condition is displayed.

Q: Is the check result normal?

YES : The trouble can be an intermittent malfunction (Refer to GROUP 00 – How to use Troubleshooting/inspection Service Points – How to Cope with Intermittent Malfunction).
NO : Replace the ETACS-ECU.

www.cargeek.ir

www.CarGeek.ir

Inspection Procedure 7: The rear door switch (RH) signal is not received.

⚠ CAUTION

Before replacing the ECU, ensure that the power supply circuit, the earth circuit and the communication circuit are normal.

Rear Door Switch (RH) Input Circuit

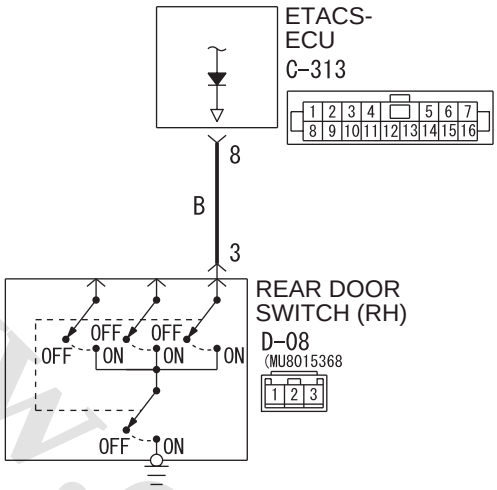

Wire colour code
B : Black LG : Light green G : Green L : Blue W : White Y : Yellow SB : Sky blue
BR : Brown O : Orange GR : Grey R : Red P : Pink V : Violet PU : Purple SI : Silver

W8G54X047A

Connector: C-313 <LHD>
ETACS-ECU

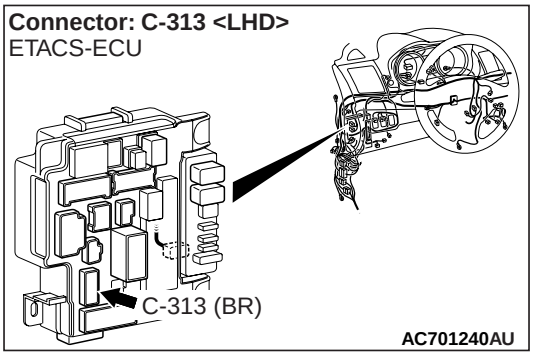

Connector: D-08

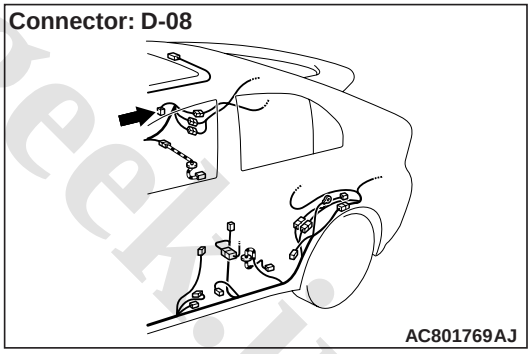

Connector: C-313 <RHD>
ETACS-ECU

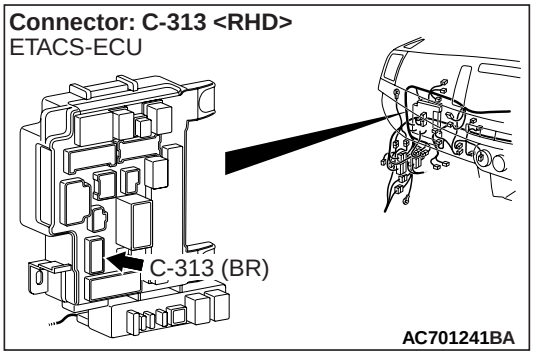

COMMENTS ON TROUBLE SYMPTOM

If there is an error to the rear door switch (RH) input signal, the rear door switch (RH) signal is no longer output to the communication line.

PROBABLE CAUSES

- Malfunction of rear door switch (RH)
- Malfunction of the ETACS-ECU
- Damaged harness wires and connectors

www.cargeek.ir

DIAGNOSIS PROCEDURE

STEP 1. Check the installation condition.
Check that the rear door switch (RH) is installed to the body correctly.

Q: Is the check result normal?
YES : Go to Step 2.
NO : Correct the installation condition.

STEP 2. Connector check: D-08 rear door switch (RH) connector

Q: Is the check result normal?
YES : Go to Step 3.
NO : Repair the defective connector.

STEP 3. Rear door switch (RH) check
Refer to GROUP 42A – Door .

Q: Is the check result normal?
YES : Go to Step 4.
NO : Replace the rear door switch (RH).

STEP 4. Connector check: C-313 ETACS-ECU connector

Q: Is the check result normal?
YES : Go to Step 5.
NO : Repair the defective connector.

STEP 5. Wiring harness check between the D-08 rear door switch (RH) connector terminal No. 3 and the C-313 ETACS-ECU connector terminal No. 8
Check the input lines for open circuit and short circuit.

Q: Is the check result normal?
YES : Go to Step 6.
NO : Repair the wiring harness.

STEP 6. M.U.T.-III data list
Open the rear right door.

Item No.	Item name	Normal condition
Item 258	RR door ajar switch	Open

OK: Normal condition is displayed.

Q: Is the check result normal?
YES : The trouble can be an intermittent malfunction (Refer to GROUP 00 – How to use Troubleshooting/inspection Service Points – How to Cope with Intermittent Malfunction).
NO : Replace the ETACS-ECU.

www.cargeek.ir

www.CarGeek.ir

Inspection Procedure 8: The rear door switch (LH) signal is not received.

⚠ CAUTION

Before replacing the ECU, ensure that the power supply circuit, the earth circuit and the communication circuit are normal.

Rear Door Switch (LH) Input Circuit

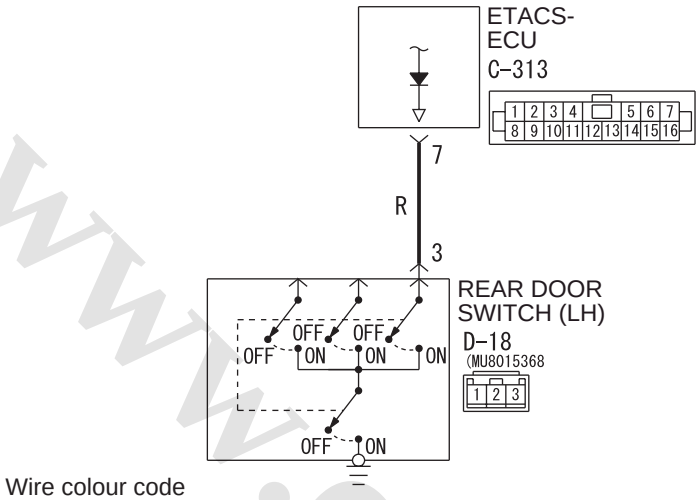

Wire colour code
B : Black LG : Light green G : Green L : Blue W : White Y : Yellow SB : Sky blue
BR : Brown O : Orange GR : Grey R : Red P : Pink V : Violet PU : Purple

W7G54L055A

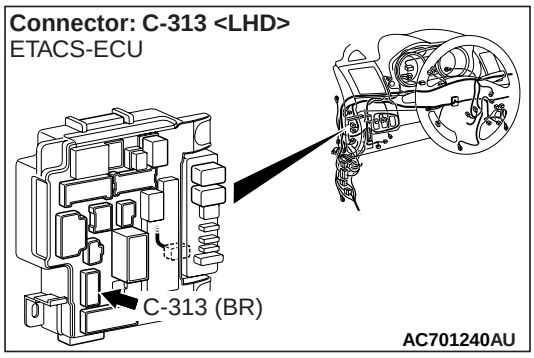

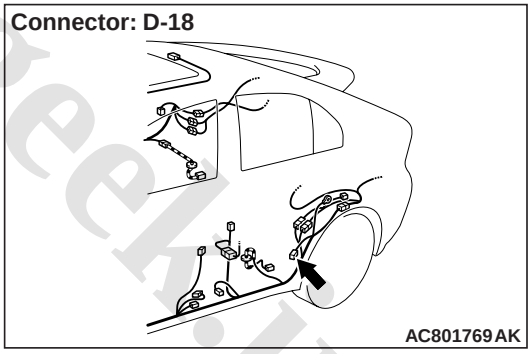

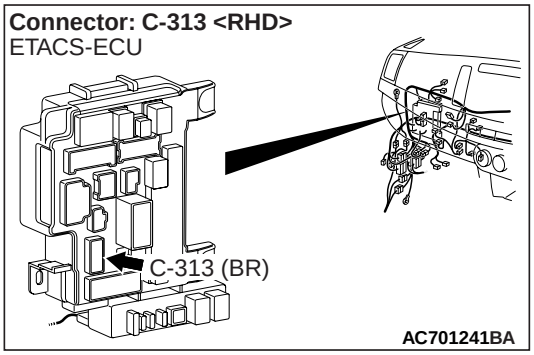

COMMENTS ON TROUBLE SYMPTOM

If there is an error to the rear door switch (LH) input signal, the rear door switch (LH) signal is no longer output to the communication line.

PROBABLE CAUSES

- Malfunction of rear door switch (LH)
- Malfunction of the ETACS-ECU
- Damaged harness wires and connectors

www.cargeek.ir

www.CarGeek.ir

DIAGNOSIS PROCEDURE

STEP 1. Check the installation condition.
Check that the rear door switch (LH) is installed to the body correctly.

Q: Is the check result normal?
YES : Go to Step 2.
NO : Correct the installation condition.

STEP 2. Connector check: D-18 rear door switch (LH) connector

Q: Is the check result normal?
YES : Go to Step 3.
NO : Repair the defective connector.

STEP 3. Rear door switch (LH) check
Refer to GROUP 42A – Door .

Q: Is the check result normal?
YES : Go to Step 4.
NO : Replace the rear door switch (LH).

STEP 4. Connector check: C-313 ETACS-ECU connector

Q: Is the check result normal?
YES : Go to Step 5.
NO : Repair the defective connector.

STEP 5. Wiring harness check between the D-18 rear door switch (LH) connector terminal No. 3 and the C-313 ETACS-ECU connector terminal No. 7
Check the input lines for open circuit and short circuit.

Q: Is the check result normal?
YES : Go to Step 6.
NO : Repair the wiring harness.

STEP 6. M.U.T.-III data list
Open the rear left door.

Item No.	Item name	Normal condition
Item 259	RL door ajar switch	Open

OK: Normal condition is displayed.

Q: Is the check result normal?
YES : The trouble can be an intermittent malfunction (Refer to GROUP 00 – How to use Troubleshooting/inspection Service Points – How to Cope with Intermittent Malfunction).
NO : Replace the ETACS-ECU.

www.cargeek.ir
www.cargeek.ir

www.CarGeek.ir

Inspection Procedure 9: The trunk lid latch signal is not received. <LANCER>

⚠ CAUTION

Before replacing the ECU, ensure that the power supply circuit, the earth circuit and the communication circuit are normal.

Trunk Lid Latch Input Circuit

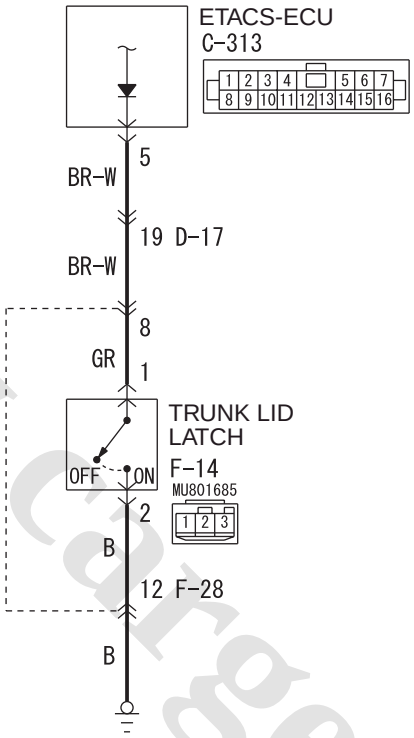

Wire colour code
B : Black LG : Light green G : Green L : Blue W : White Y : Yellow SB : Sky blue
BR : Brown O : Orange GR : Grey R : Red P : Pink V : Violet PU : Purple SI : Silver WDH54E013A

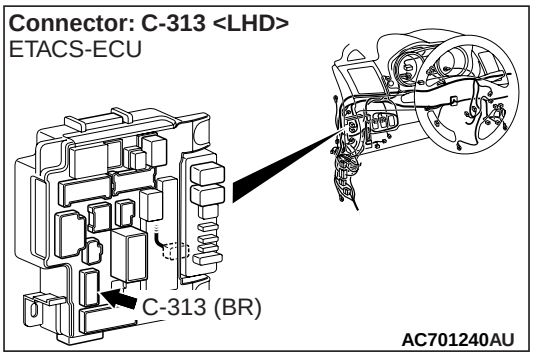

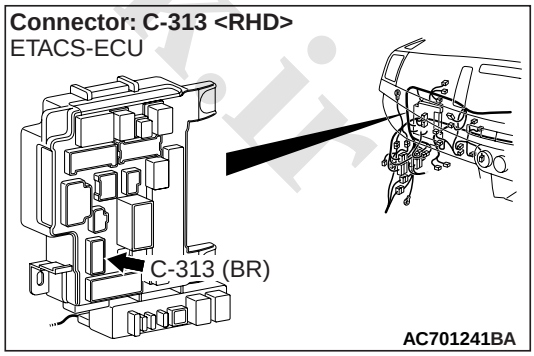

www.cargeek.ir

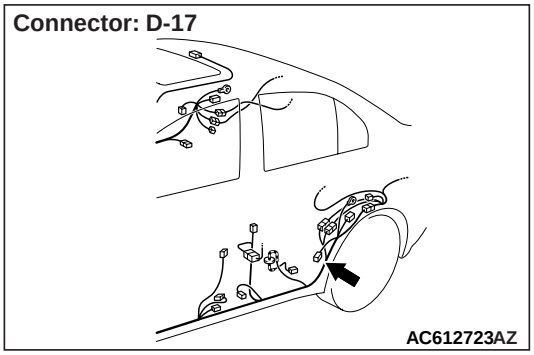

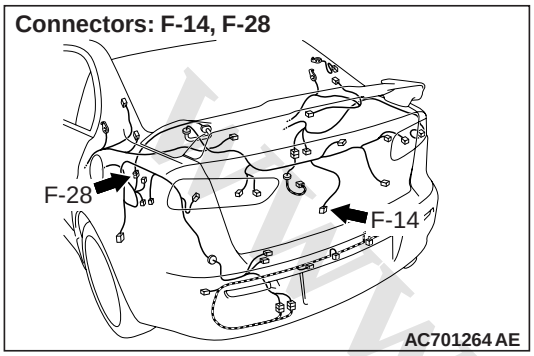

COMMENTS ON TROUBLE SYMPTOM

If there is an error to the trunk lid latch input signal, the trunk lid latch signal is no longer output to the communication line.

PROBABLE CAUSES

- Malfunction of trunk lid latch
- Malfunction of the ETACS-ECU
- Damaged harness wires and connectors

DIAGNOSIS PROCEDURE

STEP 1. Connector check: F-14 trunk lid latch connector

Q: Is the check result normal?
YES : Go to Step 2.
NO : Repair the defective connector.

STEP 2. trunk lid latch check

Refer to GROUP 42A – Trunk lid .

Q: Is the check result normal?
YES : Go to Step 3.
NO : Replace the trunk lid latch.

STEP 3. Resistance measurement at the F-14 trunk lid latch connector

(1) Disconnect the connector, and measure at the wiring harness side.
(2) Measure the resistance between the F-14 trunk lid latch connector terminal No. 2 and the body earth.

OK: Continuity exists (2 Ω or less)

Q: Is the check result normal?
YES : Go to Step 5.
NO : Go to Step 4.

STEP 4. Wiring harness check from F-14 trunk lid latch connector terminal No. 2 to body earth

NOTE: Prior to the wiring harness inspection, check intermediate connector F-28, and repair if necessary.
Check the earth wires for open circuit.

Q: Is the check result normal?
YES : The trouble can be an intermittent malfunction (Refer to GROUP 00 – How to use Troubleshooting/inspection Service Points – How to Cope with Intermittent Malfunction).
NO : Repair the wiring harness.

STEP 5. Connector check: C-313 ETACS-ECU connector

Q: Is the check result normal?
YES : Go to Step 6.
NO : Repair the defective connector.

STEP 6. Wiring harness check between the F-14 trunk lid latch connector terminal No. 1 and the C-313 ETACS-ECU connector terminal No. 5

NOTE: Prior to the wiring harness inspection, check intermediate connectors D-17 and F-28, and repair if necessary.
Check the input lines for open circuit and short circuit.

Q: Is the check result normal?
YES : Go to Step 7.
NO : Repair the wiring harness.

STEP 7. M.U.T.-III data list

Open the trunk.

Item No.	Item name	Normal condition
Item 260	Trunk/gate trunk ajar switch	Open

OK: Normal condition is displayed.

Q: Is the check result normal?

www.cargeek.ir

www.CarGeek.ir

YES : The trouble can be an intermittent malfunction (Refer to GROUP 00 – How to use Troubleshooting/inspection Service Points – How to Cope with Intermittent Malfunction).

NO : Replace the ETACS-ECU.

Inspection Procedure 9: The tailgate switch signal is not received. <LANCER SPORTBACK>

⚠ CAUTION

Before replacing the ECU, ensure that the power supply circuit, the earth circuit and the communication circuit are normal.

Tailgate Switch Input Circuit

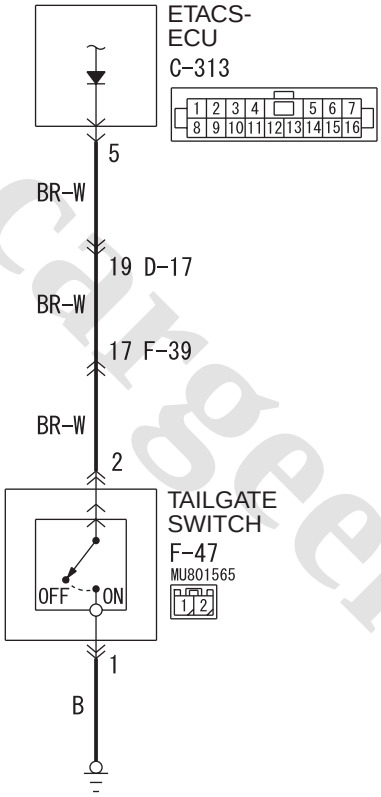

Wire colour code
B : Black LG : Light green G : Green L : Blue W : White Y : Yellow SB : Sky blue
BR : Brown O : Orange GR : Grey R : Red P : Pink V : Violet PU : Purple SI : Silver WDH54E014A

www.cargeek.ir

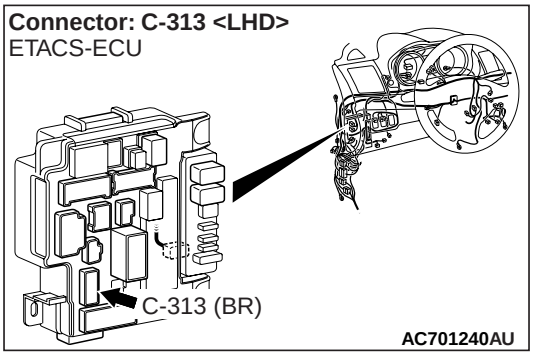

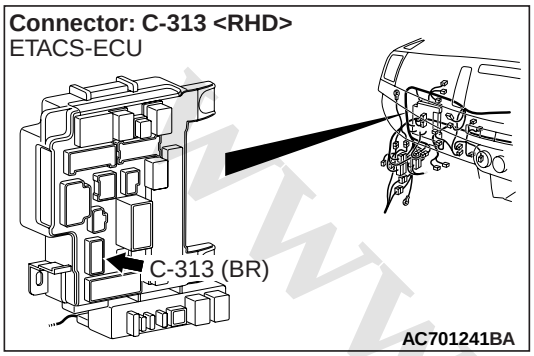

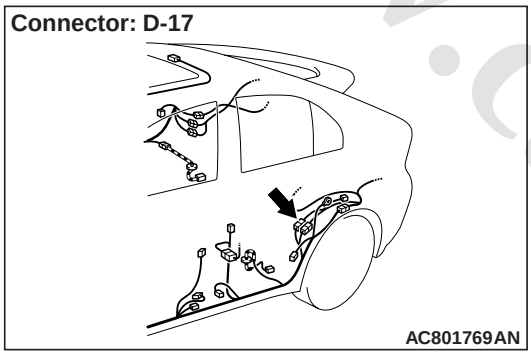

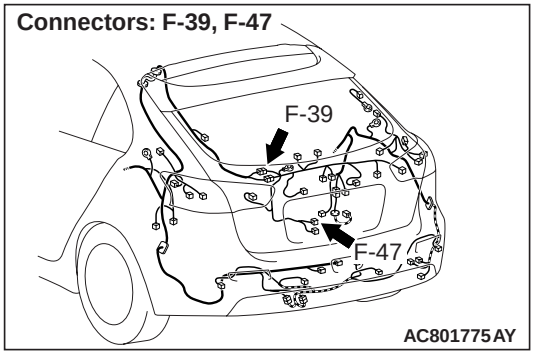

COMMENTS ON TROUBLE SYMPTOM

If there is an error to the tailgate switch input signal, the tailgate switch signal is no longer output to the communication line.

PROBABLE CAUSES

- Malfunction of tailgate switch
- Malfunction of the ETACS-ECU
- Damaged harness wires and connectors

DIAGNOSIS PROCEDURE

STEP 1.Connector check: F-47 tailgate switch connector

Q: Is the check result normal?
YES : Go to Step 2.
NO : Repair the defective connector.

STEP 2. Tailgate switch check

Refer to GROUP 42A – Tailgate .

Q: Is the check result normal?
YES : Go to Step 3.
NO : Replace the tailgate switch.

STEP 3. Resistance measurement at the F-47 tailgate switch connector

(1) Disconnect the connector, and measure at the wiring harness side.
(2) Measure the resistance between the F-47 tailgate switch connector terminal No. 1 and the body earth.

OK: Continuity exists (2 Ω or less)

Q: Is the check result normal?
YES : Go to Step 5.
NO : Go to Step 4.

STEP 4. Wiring harness check between the F-47 tailgate switch connector terminal No. 1 and the body earth

Check the earth wires for open circuit.

Q: Is the check result normal?
YES : The trouble can be an intermittent malfunction (Refer to GROUP 00 – How to use Troubleshooting/inspection Service Points – How to Cope with Intermittent Malfunction).
NO : Repair the wiring harness.

STEP 5. Connector check C-313 ETACS-ECU connector

Q: Is the check result normal?
YES : Go to Step 6.
NO : Repair the defective connector.

www.cargeek.ir

www.CarGeek.ir

STEP 6. Wiring harness check between the F-47 tailgate switch connector terminal No. 2 and the C-313 ETACS-ECU connector terminal No. 5.

Check the input line for open circuit.

NOTE: Prior to the wiring harness inspection, check intermediate connector D-17 and F-39, and repair if necessary.

Q: Is the check result normal?

YES : Go to Step 7.

NO : Repair the wiring harness.

STEP 7. M.U.T.-III data list

Open the tailgate.

Item No.	Item name	Normal condition
Item 260	Trunk/gate trunk ajar switch	Open

OK: Normal condition is displayed.

Q: Is the check result normal?

YES : The trouble can be an intermittent malfunction (Refer to GROUP 00 – How to use Troubleshooting/inspection Service Points – How to Cope with Intermittent Malfunction).

NO : Replace the ETACS-ECU.

Inspection Procedure 10: The hazard warning lamp switch signal is not received.

⚠ CAUTION

Before replacing the ECU, ensure that the power supply circuit, the earth circuit and the communication circuit are normal.

Hazard Warning Lamp Switch Input Circuit

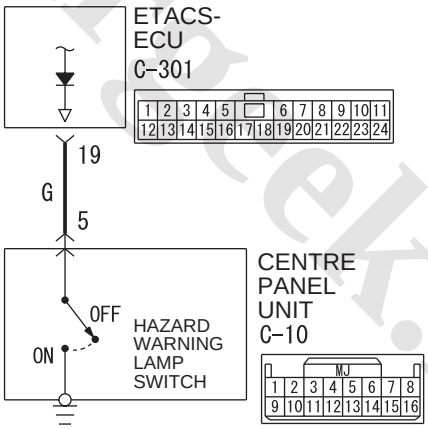

Wire colour code
B : Black LG : Light green G : Green L : Blue W : White Y : Yellow SB : Sky blue
BR : Brown O : Orange GR : Grey R : Red P : Pink V : Violet PU : Purple SI : Silver

W8H54E041A

www.cargeek.ir

www.CarGeek.ir

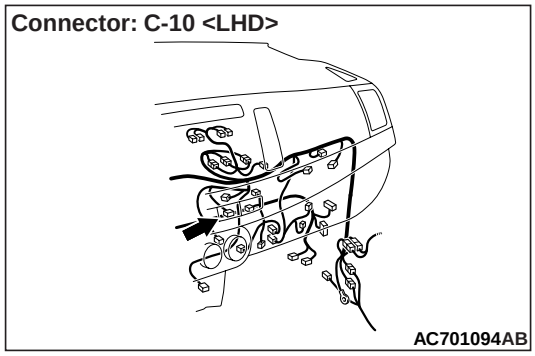

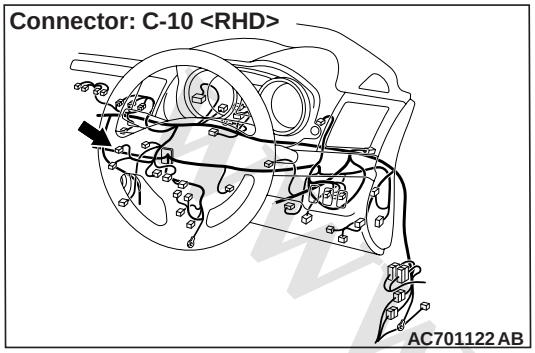

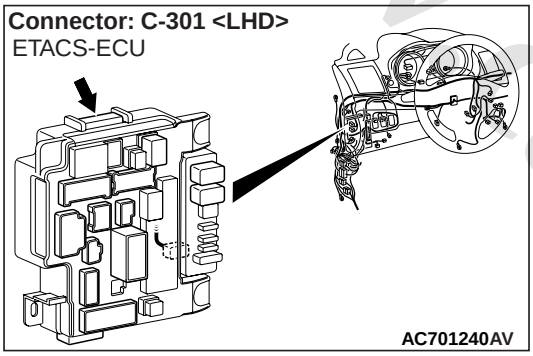

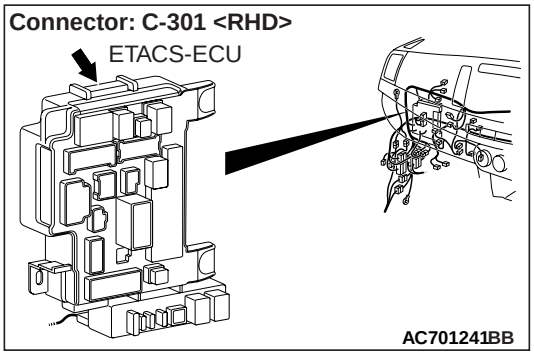

COMMENTS ON TROUBLE SYMPTOM

The hazard warning lamp switch input signal is used for the operation judgement of hazard warning lamp. Therefore, if the signal is abnormal, the hazard warning lamp will not illuminate.

PROBABLE CAUSES

- Malfunction of centre panel unit
- Malfunction of the ETACS-ECU
- Damaged harness wires and connectors

DIAGNOSIS PROCEDURE

STEP 1. Connector check: C-10 centre panel unit connector

Q: Is the check result normal?
YES : Go to Step 2.
NO : Repair the defective connector.

STEP 2. Check the hazard warning lamp switch.

Check the hazard warning lamp switch. Refer to .

Q: Is the check result normal?
YES : Go to Step 3.
NO : Replace the centre panel unit.

STEP 3. Connector check: C-10 ETACS-ECU connector

Q: Is the check result normal?
YES : Go to Step 4.
NO : Repair the defective connector.

STEP 4. Wiring harness check between the C-301 ETACS-ECU connector terminal No. 19 and the C-10 centre panel unit connector terminal No. 5

- Check the input line for open circuit.

Q: Is the check result normal?
YES : Go to Step 5.
NO : Repair the wiring harness.

STEP 5. M.U.T.-III data list

Turn ON the hazard warning lamp switch.

Item No.	Item name	Normal condition
Item 265	Hazard switch	ON

OK: Normal condition is displayed.

Q: Is the check result normal?
YES : The trouble can be an intermittent malfunction (Refer to GROUP 00 – How to use Troubleshooting/inspection Service Points – How to Cope with Intermittent Malfunction).
NO : Replace the ETACS-ECU.

www.cargeek.ir

www.CarGeek.ir

Inspection Procedure 11: The column switch signal is not received.

⚠ CAUTION

Before replacing the ECU, ensure that the communication circuit is normal.

COMMENTS ON TROUBLE SYMPTOM

The ETACS-ECU receives the column switch signal via the LIN communication. If there is an abnormality to column switch or LIN bus line, the lamps and wiper/washer do not work normally.

PROBABLE CAUSES

- Malfunction of column switch
- Faulty LIN bus line

DIAGNOSIS PROCEDURE

STEP 1. M.U.T.-III diagnosis code

Check if diagnosis code is set to the ETACS-ECU.

Q: Is the diagnosis code set?

YES : Refer to Diagnosis code chart .

NO : Go to Step 2.

STEP 2. Column switch check

- Check the continuity for wiper switch. Refer to .
- Check the continuity for column switch (switch body part). Refer to .

Q: Is the check result normal?

YES : Go to Step 3.

NO : Replace the wiper switch or column switch (switch body part).

STEP 3. Check of the troubles

Check that the column switch signal input is normal.

Q: Is the check result normal?

YES : The trouble can be an intermittent malfunction (Refer to GROUP 00 – How to use Troubleshooting/inspection Service Points – How to Cope with Intermittent Malfunction).

NO : Replace the lighting switch.

Inspection Procedure 12: The hood latch switch signal is not received.

⚠ CAUTION

Before replacing the ECU, ensure that the power supply circuit, the earth circuit and the communication circuit are normal.

Hood Switch Input Circuit

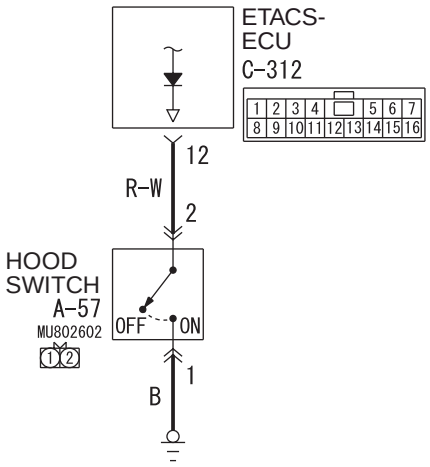

Wire colour code
B : Black LG : Light green G : Green L : Blue W : White Y : Yellow SB : Sky blue
BR : Brown O : Orange GR : Grey R : Red P : Pink V : Violet PU : Purple SI : Silver W9H54X018A

www.cargeek.ir

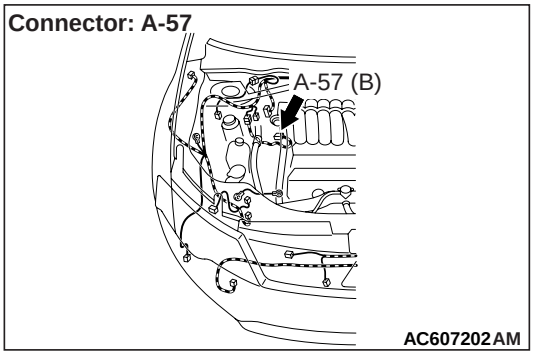

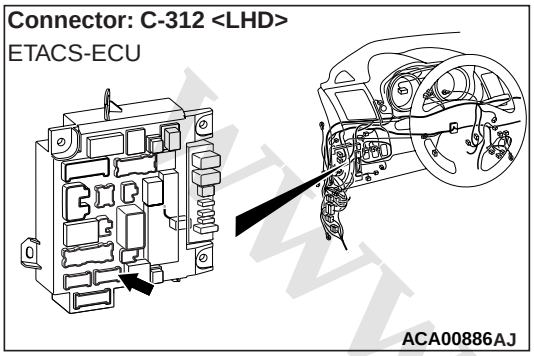

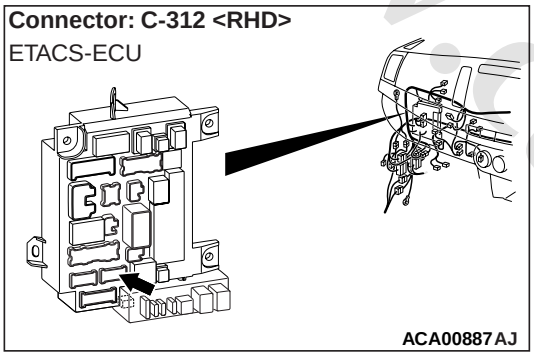

COMMENTS ON TROUBLE SYMPTOM

If there is an error to the hood latch switch input signal, the hood latch switch signal is no longer output to the communication line.

PROBABLE CAUSES

- Malfunction of hood latch switch
- Malfunction of the ETACS-ECU
- Damaged harness wires and connectors

DIAGNOSIS PROCEDURE

STEP 1. Check the installation condition.

Check that the hood latch switch is installed to the body correctly.

Q: Is the check result normal?

YES : Go to Step 2.
NO : Correct the installation condition.

STEP 2. Connector check: A-57 hood latch switch connector

Q: Is the check result normal?

YES : Go to Step 3.
NO : Repair the defective connector.

STEP 3. hood latch switch check

Refer to GROUP 42A – Hood .

Q: Is the check result normal?

YES : Go to Step 4.
NO : Replace the hood latch switch.

STEP 4. Resistance measurement at the A-57 hood latch switch connector

(1) Disconnect the connector, and measure at the wiring harness side.
(2) Measure the resistance between the A-57 hood latch switch connector terminal No. 1 and the body earth.

OK: Continuity exists (2 Ω or less)

Q: Is the check result normal?

YES : Go to Step 6.
NO : Go to Step 5.

STEP 5. Wiring harness check between the A-57 hood latch switch connector terminal No. 1 and the body earth

- Check the earth wires for open circuit.

Q: Is the check result normal?

YES : The trouble can be an intermittent malfunction (Refer to GROUP 00 – How to use Troubleshooting/inspection Service Points – How to Cope with Intermittent Malfunction).
NO : Repair the wiring harness.

STEP 6. Connector check: C-312 ETACS-ECU connector

Q: Is the check result normal?

YES : Go to Step 7.
NO : Repair the defective connector.

STEP 7. Wiring harness check between the A-57 hood latch switch connector terminal No. 2 and the C-312 ETACS-ECU connector terminal No. 12

Check the input lines for open circuit and short circuit.

Q: Is the check result normal?

YES : Go to Step 8.
NO : Repair the wiring harness.

www.cargeek.ir

www.CarGeek.ir

STEP 8. M.U.T.-III data list
Open the hood.

Item No.	Item name	Normal conditions
Item 266	Hood latch switch	ON

OK: Normal condition is displayed.

Q: Is the check result normal?

YES : The trouble can be an intermittent malfunction (Refer to GROUP 00 – How to use Troubleshooting/inspection Service Points – How to Cope with Intermittent Malfunction).
NO : Replace the ETACS-ECU.

Inspection Procedure 13: The stop lamp switch signal is not received.

⚠ CAUTION
Before replacing the ECU, ensure that the power supply circuit, the earth circuit and the communication circuit are normal.

COMMENTS ON TROUBLE SYMPTOM
The stop lamp switch input signal is used for the operation judgment of the functions below. If the signal is abnormal, these functions will not work.
- ABS, ASC
- AS&G system

PROBABLE CAUSES
- Malfunction of stop lamp switch
- Malfunction of ETACS-ECU
- Damaged harness wires and connectors

DIAGNOSIS PROCEDURE

STEP 1. Connector check: C-24 stop lamp switch connector, C-304, C-312 ETACS-ECU connector

Q: Is the check result normal?
YES : Go to Step 2.
NO : Repair the defective connector.

STEP 2. Check the stop lamp switch.
Check the stop lamp switch. Refer to GROUP 35A – Brake Pedal .

Q: Is the check result normal?
YES : Go to Step 3.
NO : Replace the stop lamp switch.

STEP 3. Measure the voltage at the C-312 ETACS-ECU connector
(1) Measure by backprobing without disconnecting the ETACS-ECU connector and stop lamp switch connector.
(2) Measure the voltage between the C-312 ETACS-ECU connector terminal No.16 and the body earth.

OK:
When the brake pedal is released: Approximately 0 V – 5 V (pulse)
When the brake pedal is depressed: Approximately system voltage

Q: Is the check result normal?
YES : Go to Step 6.
NO : Go to Step 4.

STEP 4. Check the wiring harness between C-312 ETACS-ECU connector terminal No.16 and C-24 stop lamp switch connector terminal No.1
- Check the signal line for open circuit or short circuit.

Q: Is the check result normal?
YES : Go to Step 5.
NO : Repair the wiring harness.

STEP 5. Check the wiring harness between C-304 ETACS-ECU connector terminal No.1 and C-24 stop lamp switch connector terminal No.2
- Check the power supply line for open circuit.

Q: Is the check result normal?
YES : Go to Step 6.
NO : Repair the wiring harness.

STEP 6. M.U.T.-III data list
Brake pedal: depress

Item No.	Item name	Normal condition
Item 290	Stop lamp switch	ON

OK: Normal condition is displayed.

Q: Is the check result normal?

www.cargeek.ir

www.CarGeek.ir

YES : The trouble can be an intermittent malfunction (Refer to GROUP 00 – How to use Troubleshooting/inspection Service Points – How to Cope with Intermittent Malfunction).

NO : Replace the ETACS-ECU.

CHECK WITH TERMINAL VOLTAGE

M1545004800480

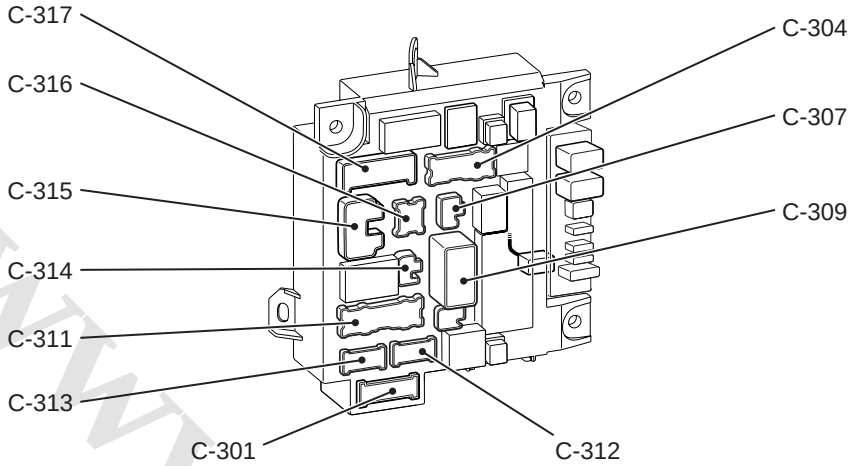

ACA01377AC

CONNECTOR: C-301

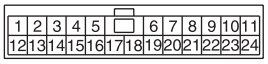

AC507030AB

Terminal No.	Check item	Check condition	Normal condition
1–9	–	–	–
10	Input to front passenger's door lock actuator (unlock)	Front passenger's door lock: Unlocked	1 V or less
11	Input to driver's door lock actuator (lock)	Driver's door lock: Locked	1 V or less
12	Defogger output	Defogger switch: ON	1 V or less
13–18	–	–	–
19	Hazard warning lamp switch input	Hazard warning lamp switch: ON	1 V or less
20	–	–	–
21	Windshield wiper backup input	Windshield low-speed wiper switch or windshield high-speed wiper switch: ON	1 V or less
22	Input to driver's door lock actuator (unlock)	Driver's door lock: Unlocked	1 V or less
23	–	–	–
24	Input to remote controlled mirror switch (folding/unfolding switch)	Remote controlled mirror switch (folding/unfolding switch): ON	1 V or less

www.cargeek.ir

www.CarGeek.ir

CONNECTOR: C-304

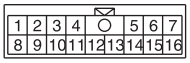

AC507031AB

Terminal No.	Check item	Check condition	Normal condition
1	Stop lamp switch power supply	Stop lamp switch: ON	System voltage
2	Inhibitor switch (R) input	Ignition switch: ON and Selector lever: R	System voltage
3	Position lamp (LH) output	With position lamp ON	System voltage
4	Front wiper motor (HI) power supply	Always	System voltage
5	Windshield wiper (HI) output	When windshield wipers are operating at high speed	System voltage
6	Windshield wiper (LO) output	When windshield wipers are operating at low speed	System voltage
7	Position lamp (RH) output	With position lamp ON	System voltage
8	Windshield wiper auto stop switch input	When windshield wipers are operating	System voltage
9	Front and side turn-signal lamp (LH) output	With front and side turn-signal lamp (LH) illuminated	System voltage
10	Engine ECU (IG1) output	Ignition switch: ON	System voltage
11	Engine ECU (fuel control) input	Engine: Started	1 V or less
12	Windshield wiper (ACC) output	Ignition switch: ACC	System voltage
13	Output to windshield washer	When windshield washer is operating	System voltage
14	Output to rear washer	When rear washer is operating	System voltage
15	Ignition switch (START) switch output	Ignition switch: START	System voltage
16	Front and side turn-signal lamp (RH) output	With front and side turn-signal lamp (RH) illuminated	System voltage

CONNECTOR: C-307

AC507032AB

Terminal No.	Check item	Check condition	Normal condition
1	Fuel pump power supply input	Ignition switch: ON	System voltage
2	+B power supply input	Always	System voltage

CONNECTOR: C-309

AC507033AB

www.cargeek.ir

www.CarGeek.ir

Terminal No.	Check item	Check condition	Normal condition
1	Battery 1	Always	System voltage
2	Battery 2	Always	System voltage

CONNECTOR: C-311

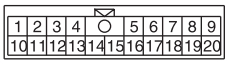

AC507035AB

Terminal No.	Check item	Check condition	Normal condition
1	Trunk lid latch <LANCER> or Tailgate lock actuator <LANCER SPORTBACK> output	Trunk lid latch <LANCER> or Tailgate lock actuator <LANCER SPORTBACK>: ON	System voltage
2	Back-up lamp switch power supply	When back-up lamp is ON	System voltage
3	Luggage compartment lamp output	When luggage compartment lamp is ON	1 V or less
4	Rear wiper motor output	When rear wiper is operating	System voltage
5	Output to rear wiper	When rear wiper is operating	System voltage
6	Rear door unlock output	When rear door is unlocked	System voltage
7	–	–	–
8	Rear wiper auto stop switch input	When rear wiper is operating	System voltage
9	Rear door lock output	When rear door is locked	System voltage
10	Taillamp (LH) and licence plate lamp output	With taillamp and licence plate lamp illuminated	System voltage
11	–	–	–
12	Rear power window sub switch power supply	Ignition switch: ON	System voltage
13	Taillamp (RH) output	When taillamps are ON	System voltage
14–16	–	–	–
17	Luggage compartment lamp output	When luggage compartment lamp is ON	System voltage
18	Rear turn-signal lamp (LH) output	When rear turn-signal lamp (LH) is ON	System voltage
19	Rear turn-signal lamp (RH) output	When rear turn-signal lamp (RH) is ON	System voltage
20	–	–	–

CONNECTOR: C-312

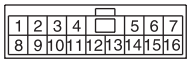

AC507034AB

www.cargeek.ir

www.CarGeek.ir

Terminal No.	Check item	Check condition	Normal condition
1	Brake fluid switch input	Brake fluid switch: ON	1 V or less
2	Cooling fan (LO) output	When cooling fan (LO) is operating	1 V or less
3	–	–	–
4	Output to fog lamps	Fog lamp switch: ON	1 V or less
5	Output to headlamp washer	Headlamp washer switch: ON	1 V or less
6	Headlamp (LO) output	When headlamp (LO) is ON	1 V or less
7	Ambient temperature sensor input	Always	0.2 – 2.72 V
8	Cooling fan (HI) output	When cooling fan (HI) is operating	1 V or less
9	Cooling fan control output	When cooling fan (HI) is operating	1 V or less
10	–	–	–
11	Output to horn	When horn sounds	1 V or less
12	–	–	–
13	Headlamp (HI) output	When headlamp (HI) is ON	1 V or less
14	Earth (ambient temperature sensor)	Always	1 V or less
15	–	–	–
16	Brake switch input	When stop lamp switch is ON	System voltage

CONNECTOR: C-313

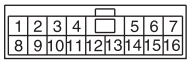

AC507036AB

Terminal No.	Check item	Check condition	Normal condition
1	–	–	–
2	SRS-ECU power supply	Ignition switch: ON	System voltage
3	–	–	–
4	Inhibitor switch output	Ignition switch: ON	System voltage
5	Trunk lid latch <LANCER> or Tailgate switch <LANCER SPORTBACK> input	Trunk lid latch <LANCER> or Tailgate switch <LANCER SPORTBACK>: ON (trunk or tailgate open)	1 V or less
6	–	–	–
7	Rear door switch (LH) input	Rear door switch (LH): ON (door open)	1 V or less
8	Rear door switch (RH) input	Rear door switch (RH): ON (door open)	1 V or less
9–11	–	–	–
12	Front door switch (RH) <LHD> or (LH) <RHD> input	Front door switch (RH) <LHD> or (LH) <RHD>: ON (door open)	1 V or less
13	Rear door unlock switch input	Rear door lock: Unlocked	1 V or less

www.cargeek.ir

www.CarGeek.ir

Terminal No.	Check item	Check condition	Normal condition
14	–	–	–
15	ASC off switch input	ASC off switch: ON	1 V or less
16	Front door switch (LH) <LHD> or (RH) <RHD> input	Front door switch (LH) <LHD> or (RH) <RHD>: ON (door open)	1 V or less

CONNECTOR: C-314

AC507037AB

Terminal No.	Check item	Check condition	Normal condition
1	Fuel pump output	Engine: Started	System voltage
2	–	–	–

CONNECTOR: C-315

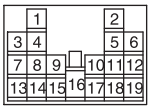

AC507029AB

Terminal No.	Check item	Check condition	Normal condition
1, 2	–	–	–
3	Cigarette lighter output	Ignition switch: ACC	System voltage
4	–	–	–
5	Centre door lock (unlock) output	When the door lock actuators unlock the doors	System voltage
6	Output to central door locking (for locking the doors)	When the door lock actuators lock the doors	System voltage
7	Ignition switch (START) input	Ignition switch: START	System voltage
8	Power window main switch power supply	Ignition switch: ON	System voltage
9	Ignition switch (ACC) output	Ignition switch: ACC	System voltage
10	–	–	–
11	Accessory socket 2 output	Ignition switch: ACC	System voltage
12	–	–	–
13	Input to key reminder switch	Key reminder switch: ON (ignition key removed)	1 V or less
14, 15	–	–	–
16	Blower motor output	Blower motor in operation	System voltage

www.cargeek.ir

www.CarGeek.ir

Terminal No.	Check item	Check condition	Normal condition
17	Earth (signal)	Always	1 V or less
18	Output to ignition key cylinder illumination lamp	When ignition key cylinder illumination is ON	System voltage
19	Horn switch input	Horn switch: ON	1 V or less

CONNECTOR: C-316

AC507038AB

Terminal No.	Check item	Check condition	Normal condition
1	–	–	–
2	Sunroof ECU power supply	Always	System voltage
3, 4	–	–	–
5	Room lamp output (low side)	When room lamp is ON (duty)	1 V or less
6	Room lamp output (high side)	When the room lamp is ON	System voltage

CONNECTOR: C-317

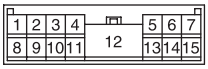

AC507028AB

Terminal No.	Check item	Check condition	Normal condition
1	Audio unit power supply	Always	System voltage
2	Combination meter power supply	Always	System voltage
3	Ignition switch power supply	Always	System voltage
4	–	–	–
5	Fuel gauge feed power supply	Ignition switch: ON	System voltage
6	Ignition switch (IG1) input	Ignition switch: ON	System voltage
7	Ignition switch (ACC) input	Ignition switch: ACC	System voltage
8, 9	–	–	–
10	Combination meter, A/C-ECU, WCM, KOS-ECU power supply	Always	System voltage
11, 12	–	–	–
13	Electric folding door mirror (unfolding) output	When the electric folding door mirrors are unfolding	System voltage
14	Electric folding door mirror (folding) output	When the door mirrors are folding	System voltage
15	Earth	Always	1 V or less

www.cargeek.ir

ON-VEHICLE SERVICE

CUSTOMISE FUNCTION

M1545002501505

By operating the M.U.T.-III ETACS system or MMCS <Vehicles for Russia>, the following functions can be customised. The programmed information is held even when the battery is disconnected.

Adjustment item (M.U.T.-III display)	Adjustment item	Adjusting content (M.U.T.-III display)	Adjusting content
ACC power auto cut	Time to ACC power cut-off when the ignition switch is in the ACC position	Disable	No function
		30 min	30 minutes (initial condition)
		60 min	60 minutes
Turn power source	Adjustment of turn-signal lamp operation condition	ACC or IG1	Operable with ACC or ON position
		IG1	Operable with ON position (initial condition)
Comfort flasher	With/without comfort flasher function	Disable	No function
		Enable	With function (initial condition)
Comfort flasher switch time	Switch operation time to activate the comfort flasher function	Normal	0.4 second (initial condition)
		Long	0.8 second
Hazard answer back	Adjustment of the number of keyless hazard warning lamp answer back flashes	Lock:1, Unlock:2	LOCK: Flashes once, UNLOCK: Flashes twice (initial condition)
		Lock:1, Unlock:0	LOCK: Flashes once, UNLOCK: No flash
		Lock:0, Unlock:2	LOCK: No flash, UNLOCK: Flash twice
		Lock:2, Unlock:1	LOCK: Flash twice, UNLOCK: Flash once
		Lock:2, Unlock:0	LOCK: Flash twice, UNLOCK: No flash
		Lock:0, Unlock:1	LOCK: No flash, UNLOCK: Flash once
		Lock:0, Unlock:0	No function

www.cargeek.ir

www.CarGeek.ir

Adjustment item (M.U.T.-III display)	Adjustment item	Adjusting content (M.U.T.-III display)	Adjusting content
Front wiper operation	Adjustment of the intermittent windshield wiper operation <vehicles without auto lamp>	Normal INT	Intermittent wiper interval is fixed to 4 seconds.
		Variable INT	Intermittent wiper interval is calculated only by the wiper volume control.
		Speed Sensitive	Intermittent wiper interval is calculated according to the intermittent wiper volume control and vehicle speed (initial condition).
	Adjustment of the intermittent windshield wiper operation <vehicles with auto lamp>	Normal INT	Intermittent wiper interval is fixed to 4 seconds.
		Variable INT	Intermittent wiper interval is calculated only by the wiper volume control.
		Speed Sensitive	Intermittent wiper interval is calculated according to the intermittent wiper volume control and vehicle speed.
		Rain Sensitive	Intermittent wiper interval is calculated according to the intermittent wiper volume control and lighting control sensor (initial condition).
Front wiper washer	Disabling or enabling washer-linked wiper function	Only Washer	No function
		Washer & Wiper	With function: Without delayed finishing wipe function <Initial condition (vehicles for RUSSIA)>
		With after wipe	With function: With delayed finishing wipe function <Initial condition (except vehicles for RUSSIA)>
Intelligent/ Comfort washer	With/without Comfort washer function	Disable	No function <Initial condition (vehicles for RUSSIA)>
		Enable	With function <Initial condition (except vehicles for RUSSIA)>
Intermittent time of rear wiper	Adjustment of rear wiper interval <LANCER SPORTBACK>	0 sec	No wiper interval
		4 sec	4 seconds
		8 sec	8 seconds (initial condition)
		16 sec	16 seconds
Rear wiper low speed mode	Disabling or enabling rear wiper continuous operation <LANCER SPORTBACK>	Disabled	No function (initial condition <vehicles without auto lamp>)
		Enabled	With function (initial condition <vehicles with auto lamp>)

www.cargeek.ir

Adjustment item (M.U.T.-III display)	Adjustment item	Adjusting content (M.U.T.-III display)	Adjusting content
Rear wiper(linked reverse gear)	Adjustment of automatic rear window wiper operation with reverse gear engaged <LANCER SPORTBACK>	Enable(R wip.ON)	Operates only when the rear wiper switch is ON.
		Enable(R/F wip.)	Operates only when the front or rear wiper switch is ON (initial condition).
Auto fold mirror	Electric folding door mirror automatic unfolding function <Vehicles with keyless entry system>	Not Auto	No synchronised operation
		Open Vehicle SPD	Vehicle speed-dependent operation (initial condition <Vehicles without multi mode keyless entry system>)
		Open/Close by IG	Ignition switch linked operation
		OPN/CLS Keyless	Keyless entry linked operation (initial condition <Vehicles with multi mode keyless entry system>)
Sensitivity for auto lamp	Lighting control sensor sensitivity (illumination intensity) <vehicles with auto lamp>	Level 1 bright	High-high ambient brightness
		Level 2 bright	High ambient brightness
		Level 3	Standard ambient brightness (initial condition)
		Level 4 dark	Low ambient brightness
		Level 5 dark	Low-low ambient brightness
Room lamp delay timer with door	Adjustment of interior lamp delay shutdown time	0 sec	0 second (no delay shutdown time)
		7.5 sec	7.5 seconds
		15 sec	15 seconds (initial condition)
		30 sec	30 seconds
		60 sec	60 seconds
		120 sec	120 seconds
		180 sec	180 seconds
Head lamp auto cut customise	Adjustment of headlamp automatic shutdown function	Disable	No function
		Enable (B-spec.)	With function (initial condition)
Interior lamp auto cut timer	Adjustment of interior lamp automatic shutdown function operation time	Disable	No function
		3 min	3 minutes
		30 min	30 minutes (initial condition)
		60 min	60 minutes
Coming home light	Disabling or enabling coming home light function	Disabled	No function
		15 sec	The headlamps illuminate for 15 seconds.
		30sec	The headlamps illuminate for 30 seconds. (initial condition)
		60 sec	The headlamps illuminate for 60 seconds.
		180 sec	The headlamps illuminate for 180 seconds.

www.cargeek.ir

www.CarGeek.ir

Adjustment item (M.U.T.-III display)	Adjustment item	Adjusting content (M.U.T.-III display)	Adjusting content
Welcome light	Disabling or enabling welcome light function	Disabled	No function <Initial condition (vehicles for RUSSIA)>
		Small	The tail lamp illuminates. <Initial condition (except vehicles for RUSSIA)>
		Head	The headlamps illuminate.
Auto door unlock	Adjustment of the auto door unlock function	Disabled	Without function <M/T, A/T, CVT> (initial condition)
		Always (P pos)	With function: Operates when the shift lever or the selector lever is moved to the P position. <A/T, CVT>
		Always(Lock pos)	With function: Operates when the ignition switch is moved to the LOCK (OFF) position. <M/T, A/T, CVT>
Timer lock timer	Timer lock period adjustment	30 sec	30 seconds (initial condition)
		60 sec	60 seconds
		120 sec	120 seconds
		180 sec	180 seconds
Door unlock mode	Adjustment of power door locks with selective unlocking <Vehicles without dead lock system>	All Doors Unlock	Without function: The first operation of keyless entry system or unlock operation by KOS unlocks all doors (initial condition).
		Dr Door Unlock	With function: The first operation of keyless entry system or unlock operation by KOS unlocks the driver's door only, and the second unlock operation within 2 seconds after that unlocks all doors.
Deadlock Button Operation	Adjustment of the dead lock system setting procedure <vehicles with dead lock system>	Twice	Operate the lock switch of the keyless entry system or KOS twice.(initial condition)
		Once	Operate the lock switch of the keyless entry system or KOS once.
Multi mode	Multi-mode keyless entry function customisation <Vehicles with electric retractable remote controlled door mirrors>	Disable	No function
		D/M: O&C	Door mirror fold/unfold operation only (initial condition)
KOS key detect out from window	With/without KOS key exterior detection function <Vehicles with KOS>	Disable	No function (initial condition)
		Enable	With function

www.cargeek.ir

www.CarGeek.ir

Adjustment item (M.U.T.-III display)	Adjustment item	Adjusting content (M.U.T.-III display)	Adjusting content
KOS feature	KOS function adjustment <Vehicles with KOS>	Both enable	All KOS functions are enabled (initial condition).
		Door Entry enable	Only door entry function is enabled.
		ENG strt enable	Only engine starting function is enabled.
		Both disabled	All KOS functions are disabled.
Sensitivity for security sensor	Sensitivity level setting of security alarm sensor <Vehicles with security alarm>	Level 1	100% sensitivity of security alarm sensor (initial condition)
		Level 2	90% sensitivity of security alarm sensor
		Level 3	80% sensitivity of security alarm sensor
		Level 4	70% sensitivity of security alarm sensor
Alarm	Enables/disables security alarm <Vehicles with security alarm>	Disable	Without function
		Enable	With function (Initial condition)

www.cargeek.ir
www.cargeek.ir

www.CarGeek.ir

ETACS-ECU

REMOVAL AND INSTALLATION

M1545004700289

⚠ CAUTION

When the ETACS-ECU is replaced, chassis number writing and coding must be performed. When diagnosis code No.B1761 "Chassis No. not programmed" or No.B222C "Coding not completed" is set to the ETACS-ECU, perform chassis number writing and coding. Refer to the "M.U.T.-III operation manual" and perform coding.

Pre-removal and Post-installation Operation
- Instrument panel lower (Refer to GROUP 52A – Instrument Lower Panel .) <LHD>
- Glove box (Refer to GROUP 52A – Glove box .) <RHD>

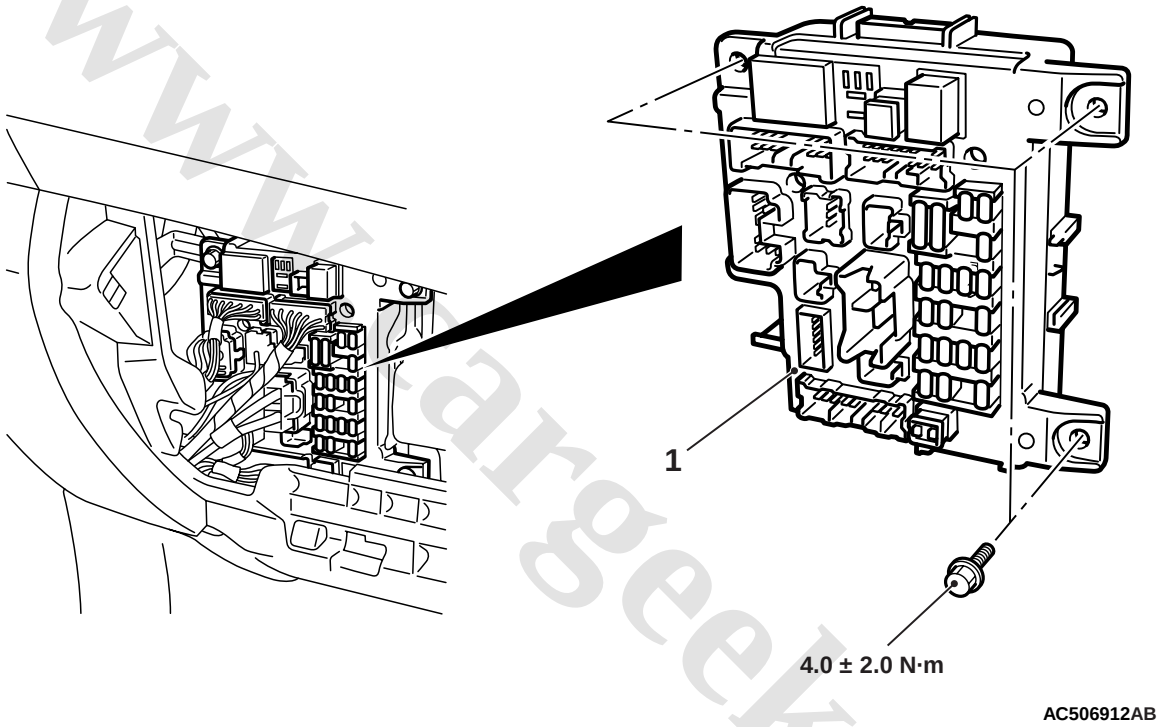

Removal Steps

>>**A**<< 1. ETACS-ECU

www.cargeek.ir

www.CarGeek.ir

INSTALLATION SERVICE POINT

>>A<< ETACS-ECU

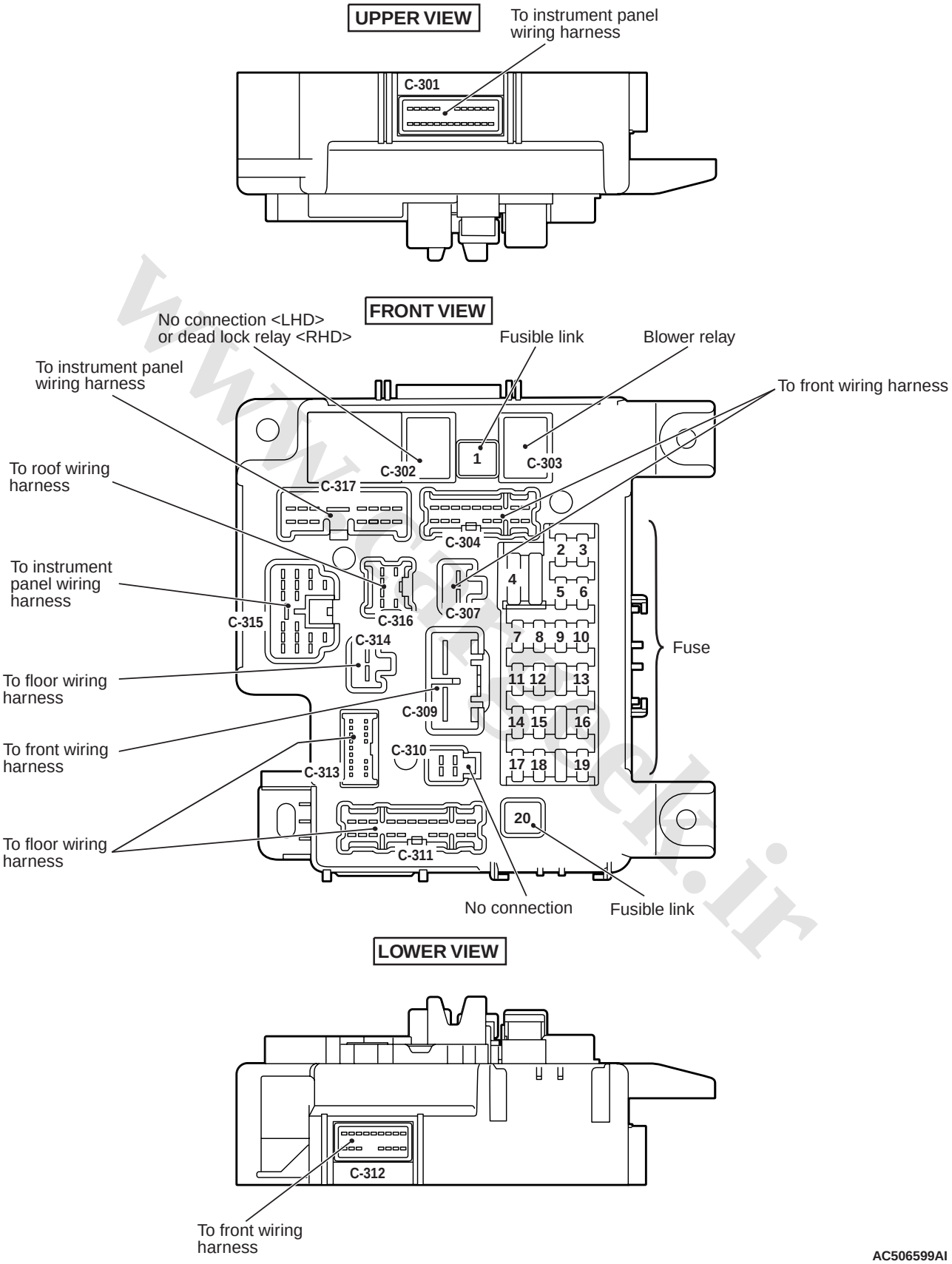

The connectors and relays connected to the ETACS-ECU are shown in the figure.

www.cargeek.ir

www.CarGeek.ir

SECURITY ALARM

SPECIAL TOOLS

M1547000600305

www.cargeek.ir

www.cargeek.ir

www.CarGeek.ir

Tool	Number	Name	Use
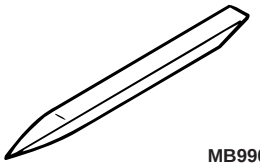 MB990784	MB990784	Ornament remover	Removal of centre air outlet, centre panel

www.cargeek.ir

www.cargeek.ir

www.CarGeek.ir

Tool	Number	Name	Use
a 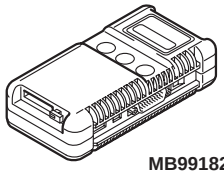 MB991824 b 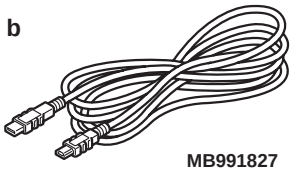 MB991827 c 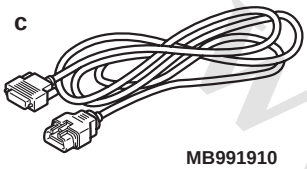 MB991910 d 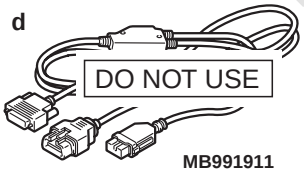 DO NOT USE MB991911 e 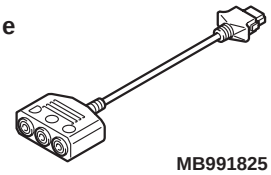 MB991825 f 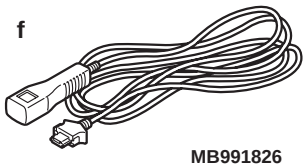 MB991826 MB991955	MB991955 a. MB991824 b. MB991827 c. MB991910 d. MB991911 e. MB991825 f. MB991826	M.U.T.-III sub-assembly a. Vehicle Communication Interface (V.C.I.) b. M.U.T.-III USB cable c. M.U.T.-III main harness A (Vehicles with CAN communication system) d. M.U.T.-III main harness B (Vehicles without CAN communication system) e. M.U.T.-III measure adapter f. M.U.T.-III trigger harness	⚠ CAUTION **For vehicles with CAN communication, use M.U.T.-III main harness A to send simulated vehicle speed. If you connect M.U.T.-III main harness B instead, the CAN communication does not function correctly.** Diagnosis code, service data and actuator test check.
a 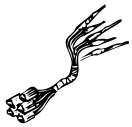 b 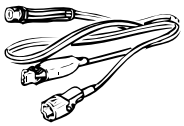 c 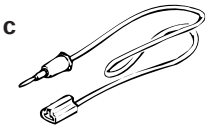 d DO NOT USE MB991223	MB991223 a. MB991219 b. MB991220 c. MB991221 d. MB991222	Harness set a. Check harness b. LED harness c. LED harness adapter d. Probe	Continuity check and voltage measurement at harness wire or connector a. For checking connector pin contact pressure b. For checking power supply circuit c. For checking power supply circuit d. For connecting a locally sourced tester

www.cargeek.ir

www.CarGeek.ir

Tool	Number	Name	Use
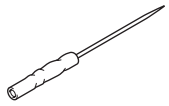 MB992006	MB992006	Extra fine probe	Continuity check and voltage measurement at harness wire or connector

TROUBLESHOOTING

STANDARD FLOW OF DIAGNOSTIC TROUBLESHOOTING

M1547001200076

Refer to GROUP 00 – Contents of troubleshooting .

DIAGNOSIS FUNCTION

M1547001300073

HOW TO READ DIAGNOSIS CODE

Refer to GROUP 00 – Diagnosis function .

HOW TO ERASE DIAGNOSIS CODE

Refer to GROUP 00 – Diagnosis function .

DIAGNOSIS CODE CHART

M1547001400188

Diagnosis code No.	Diagnostic item	Reference page
B120A	Security alarm siren error	
B120B	Security alarm sensor error	
B120C	Security alarm siren Flat Battery	
U1006	Security alarm siren LIN timeout	Refer to GROUP 54B - Diagnosis code chart
U1007	Security alarm sensor LIN timeout	Refer to GROUP 54B - Diagnosis code chart
U1539	Security alarm siren LIN checksum error	Refer to GROUP 54B - Diagnosis code chart
U1540	Security alarm SNSR.LIN checksum error	Refer to GROUP 54B - Diagnosis code chart

DIAGNOSIS CODE PROCEDURES

Code No.B120A Security alarm siren error

⚠ CAUTION

Before replacing the ECU or sensor, ensure that the power supply circuit, the earth circuit and the communication circuit are normal.

DIAGNOSTIC FUNCTION

- The security alarm siren communicates with the ETACS-ECU by the LIN via the LIN cutoff control unit. The diagnosis code No. B120A is set if the communication data between the EATCS-ECU and security alarm siren has an error when the relay inside the LIN cutoff control unit is ON (alarm is not activated.)

TROUBLESHOOTING HINT

Malfunction of security alarm siren

www.cargeek.ir

www.CarGeek.ir

DIAGNOSIS PROCEDURE

STEP 1. M.U.T.-III diagnosis code.
Check if diagnosis code is set to the ETACS-ECU.

Q: Is the diagnosis code set?
YES : Diagnose the ETACS-ECU. Refer to GROUP 54A, Diagnosis .
NO : Go to Step 2.

STEP 2. Security alarm siren operation check
(1) Set the security alarm to the "Ready to be triggered" condition.
(2) Open the driver's door by using the ignition key.
(3) Check that the security alarm siren sounds.

Q: Is the check result normal?
YES : The trouble can be an intermittent malfunction (Refer to GROUP 00 – How to Cope with Intermittent Malfunction).
NO : Go to Step 3.

STEP 3. Replace the security alarm siren temporarily, and check whether the diagnosis code is set.
Check again if the diagnosis code is set to the ETACS-ECU.
(1) Erase the diagnosis code.
(2) Turn the ignition switch from the LOCK (OFF) position to the ON position.
(3) Check if diagnosis code is set.

Q: Is the diagnosis code set?
YES : Replace the ETACS-ECU.
NO : Replace the security alarm siren.

Code No.B120B Security alarm sensor error

⚠ CAUTION
Before replacing the ECU or sensor, ensure that the power supply circuit, the earth circuit and the communication circuit are normal.

DIAGNOSTIC FUNCTION
The security alarm sensor communicates with the ETACS-ECU via the LIN bus line. If the diagnosis code No. B120B is set, the security alarm sensor itself may be defective.

NOTE:
- *Diagnosis code No.B120B may be set when the security alarm sensor cover is improperly installed or is removed. Check if the security alarm sensor cover is properly installed.*
- *Diagnosis code No.B120B is set when the ultrasonic wave transmission/reception part of the security alarm sensor is covered. Check if the ultrasonic wave transmission/reception part of the security alarm sensor was covered.*

TROUBLESHOOTING HINT
Malfunction of the security alarm sensor

DIAGNOSIS PROCEDURE

STEP 1. M.U.T.-III diagnosis code.
Check if diagnosis code is set to the ETACS-ECU.

Q: Is the diagnosis code set?
YES : Diagnose the ETACS-ECU. Refer to GROUP 54A, Diagnosis .
NO : Go to Step 2.

STEP 2. Security alarm sensor operation check
Ultrasonic wave sensor check
1. With the windows of the vehicle opened, set the security alarm to the "Ready to be triggered" condition.
2. Put the arm from the outside to the inside of the vehicle.
3. Check that the security alarm siren sounds.

Tilt angle sensor check
1. Set the security alarm to the "Ready to be triggered" condition.
2. Raise the front wheels or rear wheels.
3. Check that the security alarm siren sounds.

Q: Is the check result normal?
YES : The trouble can be an intermittent malfunction (Refer to GROUP 00 – How to Cope with Intermittent Malfunction).
NO : Go to Step 3.

STEP 3. M.U.T.-III diagnosis code.
Check if diagnosis code No. B120A is set to the ETACS-ECU.

Q: Is diagnosis code No. B120A set?

www.cargeek.ir

www.CarGeek.ir

YES : Perform the troubleshooting of diagnosis code No.B120A. (Refer to)
NO <The ultrasonic wave sensor is defective, or the ultrasonic wave sensor and the inclination sensor are defective> : Go to step 4.
NO <Only the inclination sensor is defective> : Go to step 5.

STEP 4. Check the customise function.
Check if the ultrasonic wave sensor of the security alarm senor operates when the sensitivity of the security alarm senor is set to "Level 1".

Q: Is the check result normal?
YES : The trouble can be an intermittent malfunction (Refer to GROUP 00 – How to Cope with Intermittent Malfunction).
NO : Go to step 5.

STEP 5. Replace the security alarm sensor temporarily, and check whether the diagnosis code is set.
Check again if the diagnosis code is set to the ETACS-ECU.
(1) Erase the diagnosis code.
(2) Turn the ignition switch from the LOCK (OFF) position to the ON position.
(3) Check if diagnosis code is set.

Q: Is the diagnosis code set?
YES : Replace the ETACS-ECU.
NO : Replace the security alarm sensor.

Code No.B120C Security Alarm Siren Flat Battery

⚠ CAUTION
Before replacing the ECU or sensor, ensure that the power supply circuit, the earth circuit and the communication circuit are normal.

DIAGNOSTIC FUNCTION
The diagnosis code No.B120C is set when the voltage of the rechargeable battery is low, or when the battery inside the security alarm siren has an error.

NOTE: The rechargeable battery integrated in the security alarm siren is charged by turning the ignition switch to the ON position.

TROUBLESHOOTING HINT
- Abnormality in security alarm siren
- Service life of rechargeable battery
- Since the vehicle had been stationary for long time, the rechargeable battery remained uncharged. This reduced voltage.

DIAGNOSIS PROCEDURE

M.U.T.-III diagnosis code.
Recheck whether the diagnosis code is set.
(1) Charge the rechargeable battery of the security alarm siren by turning the ignition switch to the ON position. (In principle, charge the battery for 30 minutes or more.)
(2) Erase the diagnosis code.
(3) After the diagnosis code is erased, turn the ignition switch to the LOCK (OFF) position.
(4) Activate the security alarm once, and then cancel it.

NOTE: Note that after erasing diagnosis code No.B120C, if the ignition switch is turned from the LOCK (OFF) position to the ON position before activating the security alarm, diagnosis code No.B120C will be set even though the system is normal.

(5) Turn the ignition switch from the LOCK (OFF) position to the ON position.
(6) On completion, check that the diagnosis code is not reset.

Q: Is the diagnosis code set?
YES : Replace the security alarm siren.
NO : The diagnosis is complete.

www.cargeek.ir

www.CarGeek.ir

TROUBLE SYMPTOM CHART

M1547001500970

Trouble symptom	Inspection Procedure No.	Reference page
The security alarm is not armed (the security indicator does not illuminate).	1	
The interior alarm does not work normally while the security alarm is triggered.	2	
The hazard warning lamps do not flash while the security alarm is triggered.	3	
Horns do not sound while the security alarm system is triggered.	4	
The activated security alarm siren sounds even though no faulty operation is made.	5	
Security alarm siren does not sound.	6	

www.cargeek.ir

www.cargeek.ir

www.CarGeek.ir

SYMPTOM PROCEDURES

Inspection Procedure 1: The security alarm is not armed (The security indicator does not illuminate).

⚠ CAUTION

Before replacing the ECU, ensure that the power supply circuit, the earth circuit and the communication circuit are normal.

Security Indicator Circuit

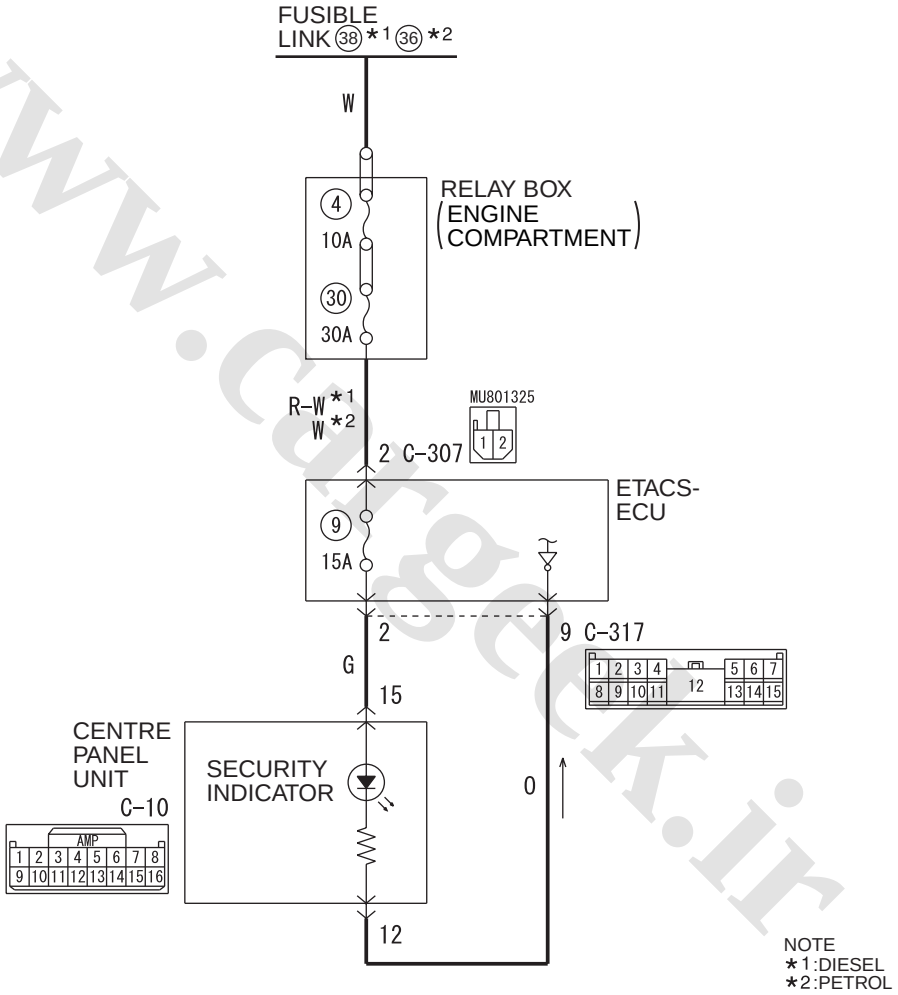

Wire colour code
B : Black LG : Light green G : Green L : Blue W : White Y : Yellow SB : Sky blue
BR : Brown O : Orange GR : Grey R : Red P : Pink V : Violet PU : Purple SI : Silver

WBH54E012A

www.cargeek.ir

www.CarGeek.ir

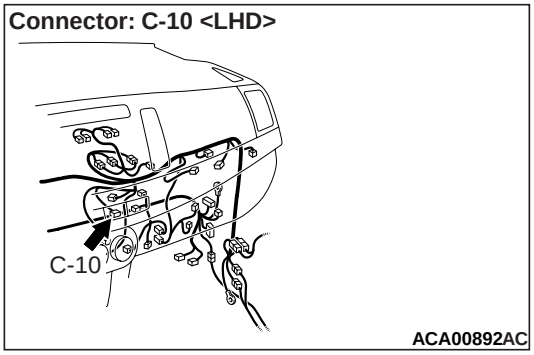

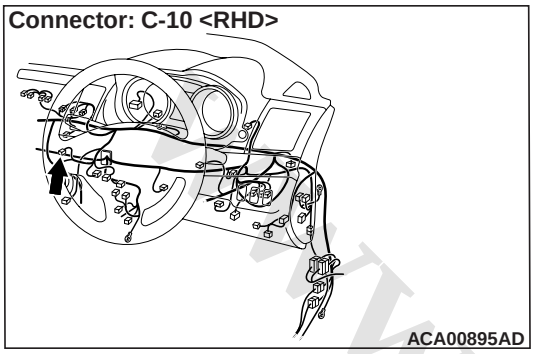

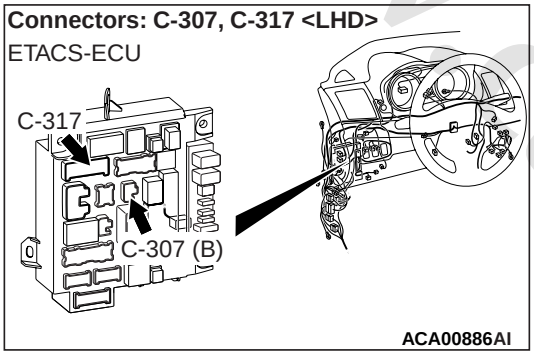

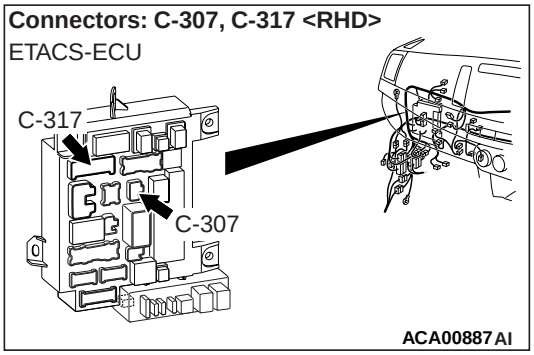

COMMENTS ON TROUBLE SYMPTOM

If this function does not work normally, the input signal circuits to the components below, the security indicator, the ETACS-ECU or the CAN bus line may have a problem.

- Keyless entry transmitter
- Key reminder switch
- Ignition switch (ACC)
- Hood switch
- Door switches
- Tailgate latch switch

PROBABLE CAUSES

- Malfunction of CAN bus line
- Malfunction of security indicator
- Malfunction of keyless entry transmitter
- Malfunction of the key reminder switch
- Malfunction of door switch
- Malfunction of tailgate latch switch
- Malfunction of hood switch
- Malfunction of the KOS-ECU
- Malfunction of the WCM
- Malfunction of the ETACS-ECU
- Damaged harness wires and connectors

DIAGNOSIS PROCEDURE

STEP 1. M.U.T.-III CAN bus diagnostics

Use the M.U.T.-III to diagnose the CAN bus lines.

Q: Is the check result normal?

YES : Go to Step 2.

NO : Repair the CAN bus line. (Refer to GROUP 54C – Troubleshooting).

STEP 2. M.U.T.-III other system diagnosis code

Check if diagnosis code is set to the KOS-ECU <vehicles with KOS> or WCM <vehicles with WCM>.

Q: Is the diagnosis code set?

YES <vehicles with KOS> : Troubleshoot the KOS (Refer to GROUP 42B – KOS).

YES <vehicles with WCM> : Troubleshoot the WCM (Refer to GROUP 42C – WCM).

NO : Go to Step 3.

STEP 3. Check the keyless entry transmitter.

Check that the keyless entry system works normally.

Q: Is the check result normal?

YES : Go to Step 4.

NO <vehicles with KOS> : Troubleshoot the KOS (Refer to GROUP 42B – KOS).

NO <vehicles with WCM> : Troubleshoot the WCM (Refer to GROUP 42C – WCM).

www.cargeek.ir

www.CarGeek.ir

STEP 4. M.U.T.-III data list

Use the ETACS-ECU service data to check the signals related to the security alarm.

- Turn the ignition switch to the ACC position.
- Turn the ignition switch to the OFF position (with ignition key <vehicles with WCM> or emergency key <vehicles with KOS> inserted).
- Open each door.
- Open the tailgate.
- Open the hood.

Item No.	Item name	Normal condition
Item 256	Dr door ajar switch	Open
Item 257	As door ajar switch	Open
Item 258	RR door ajar switch	Open
Item 259	RL door ajar switch	Open
Item 260	Trunk/gate trunk ajar switch	Open
Item 264	Handle lock switch	Key in
Item 266	Hood switch	ON
Item 288	ACC switch	ON

- Close each door.
- Close the tailgate.

Item No.	Item name	Normal condition
Item 256	Dr door ajar switch	Close
Item 257	As door ajar switch	Close
Item 258	RR door ajar switch	Close
Item 259	RL door ajar switch	Close
Item 260	Trunk/gate trunk ajar switch	Close

- Turn the ignition switch to the ”LOCK” (OFF) position (keep the ignition key <vehicles with WCM> or emergency key <vehicles with KOS> removed).

Item No.	Item name	Normal condition
Item 264	Handle lock switch	Key out
Item 288	ACC switch	OFF

OK: Normal conditions are displayed for all the items.

Q: Is the check result normal?

YES <Normal conditions are displayed for all the items.> : Go to Step 5.

NO <Normal condition is not displayed for item No. 256.> : Troubleshoot the ETACS-ECU. Refer to Inspection Procedure 5 "The front door switch (RH) signal is not received" .

NO <Normal condition is not displayed for item No. 257.> : Troubleshoot the ETACS-ECU. Refer to Inspection Procedure 6 "The front door switch (LH) signal is not received" .

NO <Normal condition is not displayed for item No. 258.> : Troubleshoot the ETACS-ECU. Refer to Inspection Procedure 7 "The rear door switch (RH) signal is not received" .

Normal condition is not displayed for item No. 259. : Troubleshoot the ETACS-ECU. Refer to Inspection Procedure 8 "The rear door switch (LH) signal is not received" .

NO <Normal condition is not displayed for item No. 260.> : Troubleshoot the ETACS-ECU. Refer to Inspection Procedure 9 "The trunk lid latch switch signal is not received" <LANCER> or "The tailgate switch signal is not received" <LANCER SPORTBACK>.

NO <Normal condition is not displayed for item No. 264.> : Refer to Inspection Procedure 3 "Key reminder switch signal is not received" .

NO <Normal condition is not displayed for item No. 266.> : Refer to Inspection Procedure 12 "The hood switch signal is not received" .

NO <Normal condition is not displayed for item No. 288.> : Troubleshoot the ETACS-ECU. Refer to Inspection Procedure 1 "The ignition switch (ACC) signal is not received" .

STEP 5. Connector check: C-10 centre panel unit

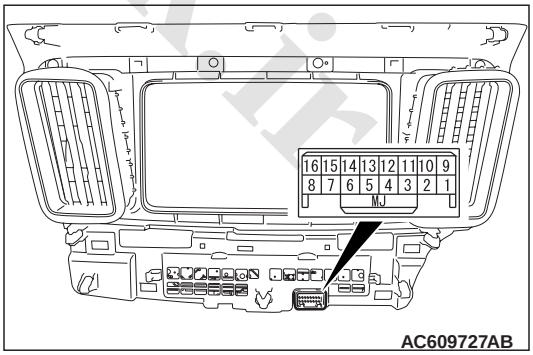

Q: Is the check result normal?

YES : Go to Step 6.

NO : Repair the defective connector.

STEP 6. Security indicator check

Check that the security indicator is normal. Refer to .

Q: Is the check result normal?

www.cargeek.ir

www.CarGeek.ir

YES : Go to Step 7.
NO : Replace the centre panel unit.

STEP 7. Connector check: C-307 ETACS-ECU connector

Q: Is the check result normal?
YES : Go to Step 8.
NO : Repair the defective connector.

STEP 8. Voltage measurement at the C-307 ETACS-ECU connector.
(1) Disconnect the connector, and measure at the wiring harness side.
(2) Measure the voltage between the C-307 ETACS-ECU connector terminal No. 2 and the body earth.

OK: System voltage

Q: Is the check result normal?
YES : Go to Step 10.
NO : Go to Step 9.

STEP 9. Wiring harness check between the C-307 ETACS-ECU connector terminal No. 2 and the fusible link (36) <PETROL> or (38) <DIESEL>
- Check the power supply line for open circuit.

Q: Is the check result normal?
YES : The trouble can be an intermittent malfunction (Refer to GROUP 00 – How to use Troubleshooting/inspection Service Points – How to Cope with Intermittent Malfunction).
NO : Repair the wiring harness.

STEP 10. Connector check: C-317 ETACS-ECU connector

Q: Is the check result normal?
YES : Go to Step 11.
NO : Repair the defective connector.

STEP 11. Wiring harness check between the C-317 ETACS-ECU connector terminal No. 2, 9 and the C-10 centre panel unit connector terminal No. 15, 12
- Check the input/output lines for open circuit and short circuit.

Q: Is the check result normal?
YES : Go to Step 12.
NO : Repair the wiring harness.

STEP 12. Retest the system

Q: Does the security alarm work normally?
YES : The trouble can be an intermittent malfunction (Refer to GROUP 00 – How to use Troubleshooting/inspection Service Points – How to Cope with Intermittent Malfunction).
NO : Replace the ETACS-ECU.

Inspection Procedure 2: The interior alarm does not work normally while the security alarm is triggered.

⚠ CAUTION
Before replacing the ECU, ensure that the power supply circuit, the earth circuit and the communication circuit are normal.

COMMENTS ON TROUBLE SYMPTOM
If the interior alarm does not work normally, ETACS-ECU, or combination meter built-in buzzer may have a problem.

PROBABLE CAUSES
- Malfunction of the ETACS-ECU
- Malfunction of combination meter
- Damaged harness wires and connectors

DIAGNOSIS PROCEDURE

STEP 1. M.U.T.-III CAN bus diagnostics
Use the M.U.T.-III to diagnose the CAN bus lines.

Q: Is the check result normal?
YES : Go to Step 2.
NO : Repair the CAN bus line (Refer to GROUP 54C – Troubleshooting).

www.cargeek.ir

www.CarGeek.ir

STEP 2. M.U.T.-III diagnosis code
Check if diagnosis code is set to the ETACS-ECU.

Q: Is the diagnosis code set?
YES : Troubleshoot the ETACS-ECU. Refer to .
NO : Go to Step 3.

STEP 3. M.U.T.-III actuator test
Perform the combination meter actuator test, and check that the buzzer sounds normally.
- Item 12: Buzzer

Q: Is the check result normal?
YES : Go to Step 4.
NO : Replace the combination meter.

STEP 4. Retest the system
Check that the security alarm works normally.

Q: Is the check result normal?
YES : The trouble can be an intermittent malfunction (Refer to GROUP 00 – How to use Troubleshooting/inspection Service Points – How to Cope with Intermittent Malfunction).
NO : Replace the ETACS-ECU.

Inspection Procedure 3: The hazard warning lamps do not flash while the security alarm is triggered.

⚠ CAUTION
Before replacing the ECU, ensure that the power supply circuit, the earth circuit and the communication circuit are normal.

COMMENTS ON TROUBLE SYMPTOM
If the hazard warning lamps do not flash normally, the ETACS-ECU may be defective.

PROBABLE CAUSES
- Malfunction of the ETACS-ECU
- Damaged harness wires and connectors

DIAGNOSIS PROCEDURE

STEP 1. Check that the hazard warning lamps operate.
Check that the hazard warning lamps illuminate normally.

Q: Is the check result normal?
YES : Go to Step 2.
NO : Troubleshoot the hazard warning lamps. Refer to Inspection Procedure 1 "The hazard warning lamps do not illuminate" .

STEP 2. M.U.T.-III diagnosis code
Check if diagnosis code is set to the ETACS-ECU.

Q: Is the diagnosis code set?
YES : Troubleshoot the ETACS-ECU. Refer to .
NO : Go to Step 3.

STEP 3. Retest the system
Check that the security alarm works normally.

Q: Is the check result normal?
YES : The trouble can be an intermittent malfunction (Refer to GROUP 00 – How to use Troubleshooting/inspection Service Points – How to Cope with Intermittent Malfunction).
NO : Replace the ETACS-ECU.

www.cargeek.ir

www.CarGeek.ir

Inspection Procedure 4: Horns do not sound while the security alarm system is triggered.

⚠ CAUTION

Before replacing the ECU, ensure that the power supply circuit, the earth circuit and the communication circuit are normal.

Horn Circuit

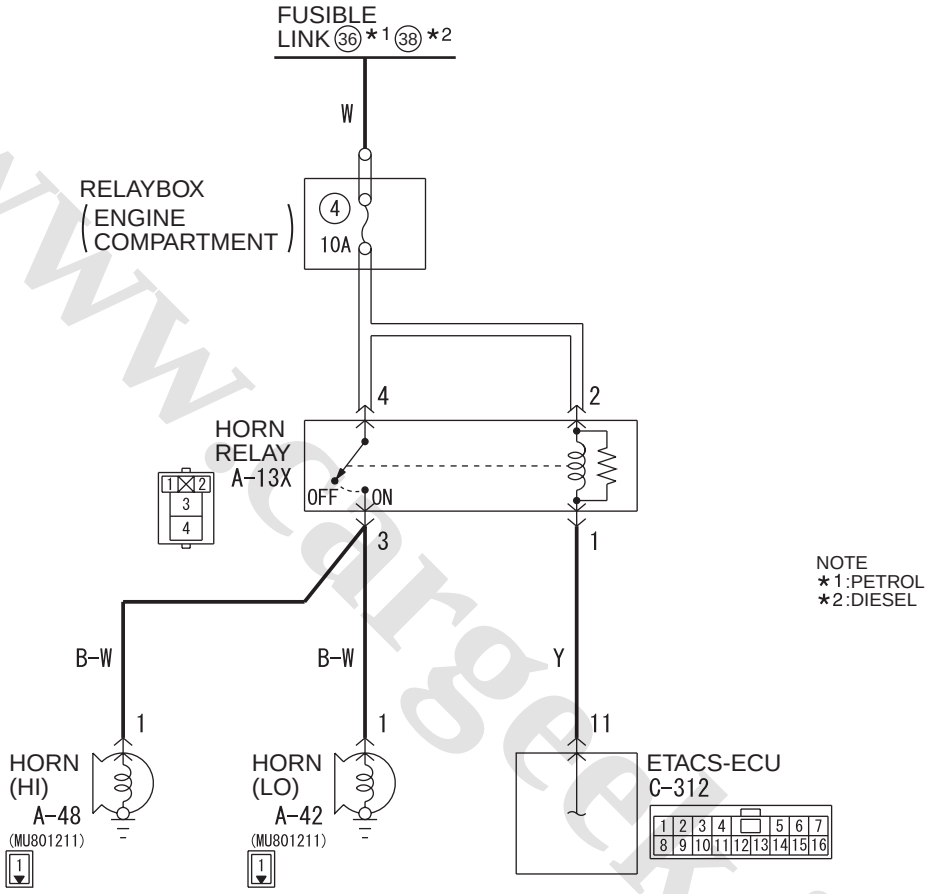

Wire colour code
B : Black LG : Light green G : Green L : Blue W : White Y : Yellow SB : Sky blue
BR : Brown O : Orange GR : Grey R : Red P : Pink V : Violet PU : Purple SI : Silver

WBH54E050A

Connector: A-13X <Except RALLIART>

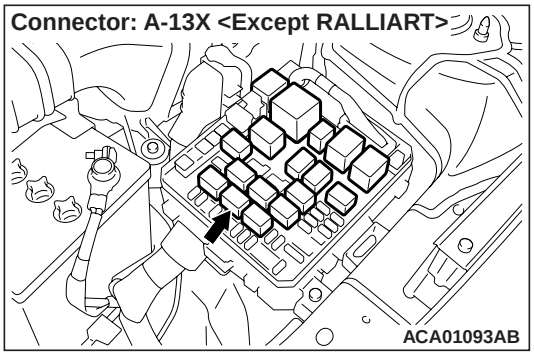

Connector: A-13X <RALLIART>

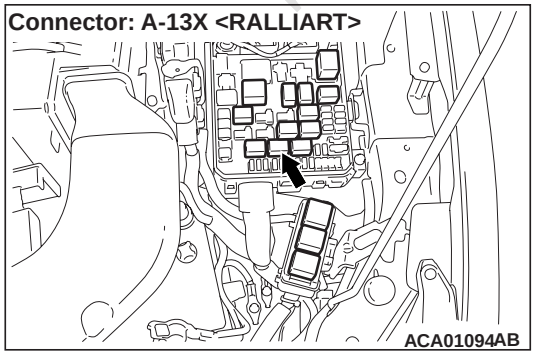

www.cargeek.ir

www.CarGeek.ir

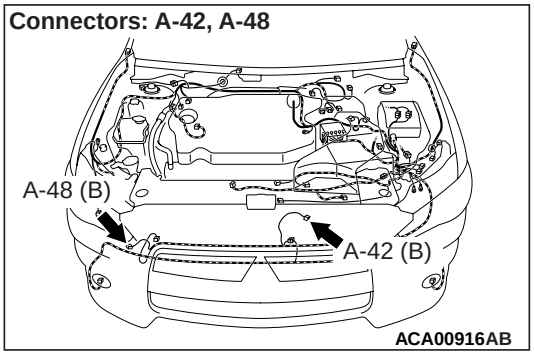

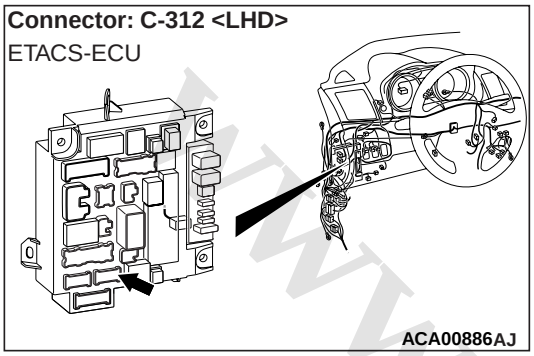

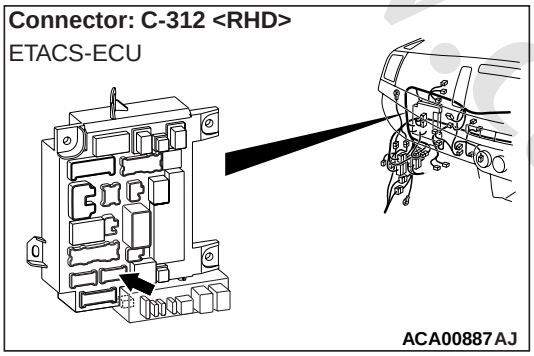

TECHNICAL DESCRIPTION (COMMENT)

If horns do not sound, the horn input signal circuit or the ETACS-ECU may be defective.

TROUBLESHOOTING HINTS

- Horns may be defective
- Horn relay may be defective
- The ETACS-ECU may be defective
- The wiring harness or connectors may have loose, corroded, or damaged terminals, or terminals pushed back in the connector

DIAGNOSIS PROCEDURE

STEP 1. M.U.T.-III diagnosis code.

Check if diagnosis code is set to the ETACS-ECU.

Q: Is the diagnosis code set?

YES : Diagnose the ETACS-ECU. Refer to GROUP 54A, Diagnosis .

NO : Go to Step 2.

STEP 2. Connector check: A-13X horn relay connector

Q: Is the check result normal?

YES : Go to Step 3.

NO : Repair the defective connector.

STEP 3. Horn relay check

Refer to .

Q: Is the check result normal?

YES : Go to Step 4.

NO : Replace the horn relay.

STEP 4. Voltage measurement at the A-13X horn relay

(1) Remove the relay, and measure at the relay box side.

(2) Measure the voltage between the A-13X horn relay connector terminal No. 2, 4 and the body earth.

OK: System voltage

Q: Is the check result normal?

YES : Go to Step 6.

NO : Go to Step 5.

STEP 5. Wiring harness check between the A-13X horn relay connector terminal No. 2, 4 and the fusible link (36) <PETROL> or (38) <DIESEL>

Check the power supply line for open circuit and short circuit.

Q: Is the check result normal?

YES : The trouble can be an intermittent malfunction (Refer to GROUP 00 – How to Cope with Intermittent Malfunction).

NO : Repair the wiring harness.

STEP 6. Connector check: C-312 ETACS-ECU connector

Q: Is the check result normal?

YES : Go to Step 7.

NO : Repair the defective connector.

STEP 7. Wiring harness check between the A-13X horn relay connector terminal No. 1 and the C-312 ETACS-ECU connector terminal No. 11

Check the output lines for open circuit and short circuit.

Q: Is the check result normal?

YES : Go to Step 8.

NO : Repair the wiring harness.

www.cargeek.ir

www.CarGeek.ir

STEP 8. Connector check: A-48 horn (HI) connector

Q: Is the check result normal?
YES : Go to Step 9.
NO : Repair the damaged parts.

STEP 9. Wiring harness check between the A-15X horn relay connector terminal No. 3 and the A-48 horn (HI) connector terminal No. 1
Check the output lines for open circuit and short circuit.

Q: Is the check result normal?
YES : Go to Step 10.
NO : Repair the wiring harness.

STEP 10. Horn (HI) check

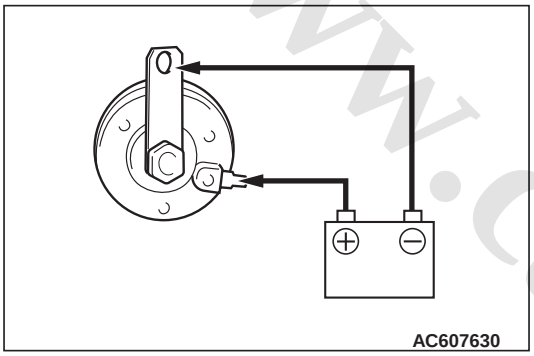

Connect the battery as shown, and verify that the horn sounds.

Q: Is the check result normal?
YES : Go to Step 11.
NO : Replace the horn (HI). go to step 11.

STEP 11. Connector check: A-42 horn (LO) connector

Q: Is the check result normal?
YES : Go to Step 12.
NO : Repair the damaged parts.

STEP 12. Wiring harness check between the A-13X horn relay connector terminal No. 3 and the A-42 horn (LO) connector terminal No. 1
Check the output lines for open circuit and short circuit.

Q: Is the check result normal?
YES : Go to Step 13.
NO : Repair the wiring harness.

STEP 13. Check the horn (LO) work normally.

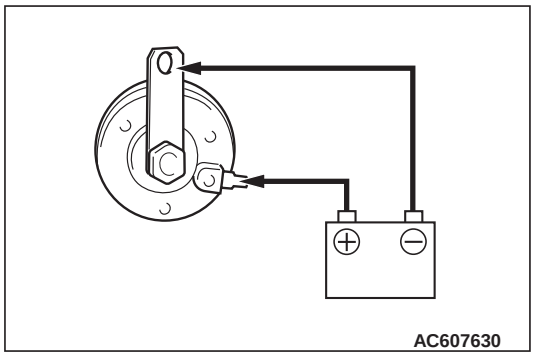

Connect the battery as shown, and verify that the horn sounds.

Q: Does the horn (LO) work normally?
YES : Go to Step 14.
NO : Replace the horn (LO).go to step 14.

STEP 14. Retest the security alarm system.

Q: Does the theft-alarm system work normally?
YES : The trouble can be an intermittent malfunction (Refer to GROUP 00 – How to Cope with Intermittent Malfunction).
NO : Replace the ETACS-ECU.

www.cargeek.ir

www.CarGeek.ir

Inspection Procedure 5: The activated security alarm siren sounds even though no faulty operation is made.

⚠ CAUTION

Before replacing the ECU, ensure that the power supply circuit, the earth circuit and the communication circuit are normal.

Security Alarm Siren Communication Circuit

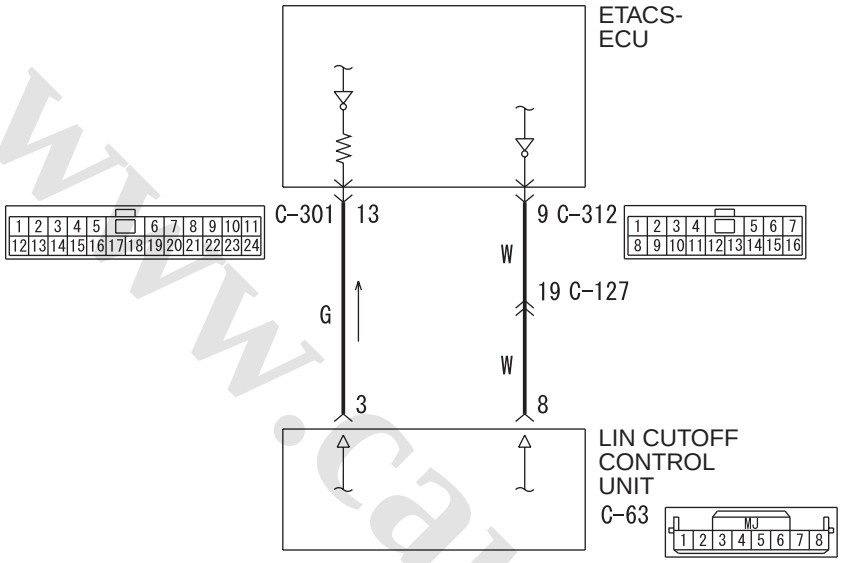

Wire colour code
B : Black LG : Light green G : Green L : Blue W : White Y : Yellow SB : Sky blue
BR : Brown O : Orange GR : Grey R : Red P : Pink V : Violet PU : Purple SI : Silver WDH54E007A

Connector: C-63 <LHD>

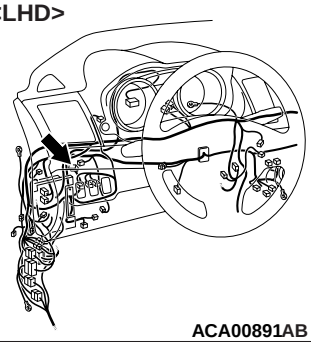

ACA00891AB

Connectors: C-301, C-312 <LHD>

ETACS-ECU

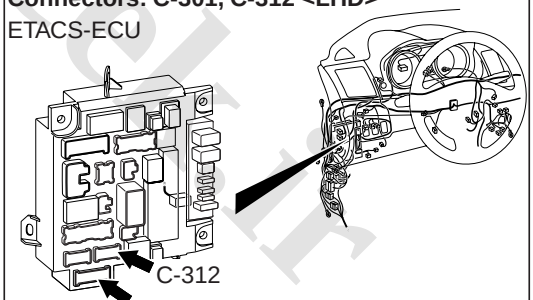

ACA00886AK

Connector: C-63 <RHD>

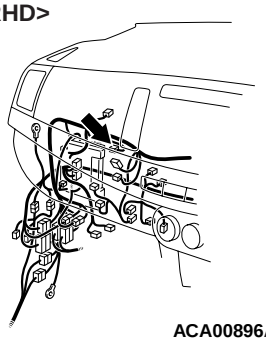

ACA00896AB

Connectors: C-301 C-312 <RHD>

ETACS-ECU

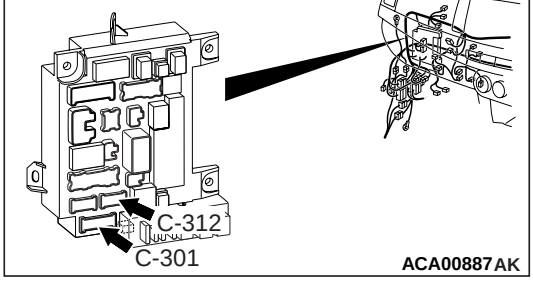

ACA00887AK

www.cargeek.ir

www.CarGeek.ir

TECHNICAL DESCRIPTION (COMMENT)

If the activated security alarm siren sounds even though no faulty operation is made, the security alarm siren may not be able to receive the signal from the ETACS-ECU via the LIN cutoff control unit.

NOTE: The security alarm siren may be sounding by false alarm. Investigate what kind of situation the security alarm siren sounded under. Check if there was any condition that caused false alarm.

TROUBLESHOOTING HINTS

- security alarm siren may be defective
- LIN cutoff control unit may be defective
- The ETACS-ECU may be defective
- The wiring harness or connectors may have loose, corroded, or damaged terminals, or terminals pushed back in the connector

DIAGNOSIS PROCEDURE

STEP 1. Vehicle status check when security alarm siren is sounding

(1) Since it is suspected that the security alarm has sounded accidentally, investigate whether the vehicle is under the situation below. Repair if an abnormality is found.
- The windows and sunroof are open.
- Some moving accessories are fitted in the vehicle.
- The interior equipment has been modified before a malfunction occurs.

(2) Set the sensitivity level of security alarm sensor to Level 4 by using the customisation function.

(3) Check if the security alarm siren sounds during the status of "Ready to be triggered" even though no faulty operation is made.

Q: Is the check result normal?
YES : Go to Step 2
NO : The diagnosis is complete.

STEP 2. M.U.T.-III diagnosis code.

Check if diagnosis code is set to the ETACS-ECU.

Q: Is the diagnosis code set?
YES : Diagnose the ETACS-ECU. Refer to GROUP 54A, Diagnosis .
NO : Go to Step 3.

STEP 3. LIN cutoff control unit check

Check the continuity of the LIN cutoff control unit. (Refer to .)

Q: Is the check result normal?
YES : Go to Step 4.
NO : Replace LIN cutoff control unit.

STEP 4. Connector check: C-301 ETACS-ECU connector, C-312 ETACS-ECU connector, C-63 LIN cutoff control unit connector

Q: Is the check result normal?
YES : Go to Step 5.
NO : Repair the defective connector.

STEP 5. Wiring harness check between the C-301 ETACS-ECU connector terminal No. 13 and C-63 LIN cutoff control unit connector terminal No. 3

Check the signal line for open circuit and short circuit.

Q: Is the check result normal?
YES : Go to Step 6.
NO : Repair the wiring harness.

STEP 6. Wiring harness check between the C-312 ETACS-ECU connector terminal No. 9 and C-63 LIN cutoff control unit connector terminal No. 8

Check the signal line for short circuit.

NOTE: Prior to the wiring harness inspection, check C-127 intermediate connector, and repair if necessary.

Q: Is the check result normal?
YES : Go to Step 7.
NO : Repair the wiring harness.

STEP 7. Retest the security alarm system.

Check if the activated security alarm siren sounds even though no faulty operation is made.

Q: Is the check result normal?
YES : The trouble can be an intermittent malfunction (Refer to GROUP 00 – How to Cope with Intermittent Malfunction).
NO : Replace the ETACS-ECU.

www.cargeek.ir

www.CarGeek.ir

Inspection Procedure 6: Security alarm siren does not sound.

⚠ CAUTION

Before replacing the ECU, ensure that the power supply circuit, the earth circuit and the communication circuit are normal.

TECHNICAL DESCRIPTION (COMMENT)

When only the hazard warning lamp flashes and the security alarm siren does not sound during "Exterior protection" status, the security alarm siren may have an internal error or the LIN cutoff control unit may be defective.

TROUBLESHOOTING HINTS

- Security alarm siren may be defective
- LIN cutoff control unit may be defective

DIAGNOSIS PROCEDURE

STEP 1. Security alarm siren operation check

(1) Set the security alarm to the "Ready to be triggered" condition.
(2) Open the driver's door by using the ignition key.
(3) Check that the security alarm siren sounds.

Q: Is the check result normal?

YES : The trouble can be an intermittent malfunction (Refer to GROUP 00 – How to Cope with Intermittent Malfunction).
NO : Go to Step 2.

STEP 2. M.U.T.-III diagnosis code.

Check if diagnosis code is set to the ETACS-ECU.

Q: Is the diagnosis code set?

YES : Diagnose the ETACS-ECU (Refer to).
NO : Go to Step 3.

STEP 3. LIN cutoff control unit check

Check the continuity of the LIN cutoff control unit. (Refer to .)

Q: Is the check result normal?

YES : Go to Step 4.
NO : Replace LIN cutoff control unit.

STEP 4. Security alarm siren operation check

(1) Set the security alarm to the "Ready to be triggered" condition.
(2) Open the driver's door by using the ignition key.
(3) Check that the security alarm siren sounds.

Q: Is the check result normal?

YES : The trouble can be an intermittent malfunction (Refer to GROUP 00 – How to Cope with Intermittent Malfunction).
NO : Replace the security alarm siren.

ON-VEHICLE SERVICE

CUSTOMISATION FUNCTION

M1547003400742

By operating the M.U.T.-III ETACS system or MMCS <Vehicles for Russia>, the following functions can be customised. The programmed information is held even when the battery is disconnected.

Adjustment item (M.U.T.-III display)	Adjustment item	Adjusting content (M.U.T.-III display)	Adjusting content
Sensitivity for security sensor	Sensitivity level setting of security alarm sensor <Vehicles with security alarm>	Level 1	100% sensitivity of security alarm sensor (initial condition)
		Level 2	90% sensitivity of security alarm sensor
		Level 3	80% sensitivity of security alarm sensor
		Level 4	70% sensitivity of security alarm sensor
Alarm	Enables/disables security alarm <Vehicles with security alarm>	Disable	Without function
		Enable	With function (Initial condition)

www.cargeek.ir

www.CarGeek.ir

LIN CUTOFF CONTROL UNIT REMOVAL AND INSTALLATION

M1547004800141

Pre-removal operation	Post-installation operation
• Removal of instrument panel side cover (Refer to GROUP 52A – Instrument Panel Assembly) • Removal of instrument panel lower (Refer to GROUP 52A – Instrument Panel Lower) <LHD> • Removal of glove box cover (Refer to GROUP 52A – Glove Box Assembly) <RHD>	• Installation of instrument panel side cover (Refer to GROUP 52A – Instrument Panel Assembly) • Installation of instrument panel lower (Refer to GROUP 52A – Instrument Panel Lower) <LHD> • Installation of glove box cover (Refer to GROUP 52A – Glove Box Assembly) <RHD>

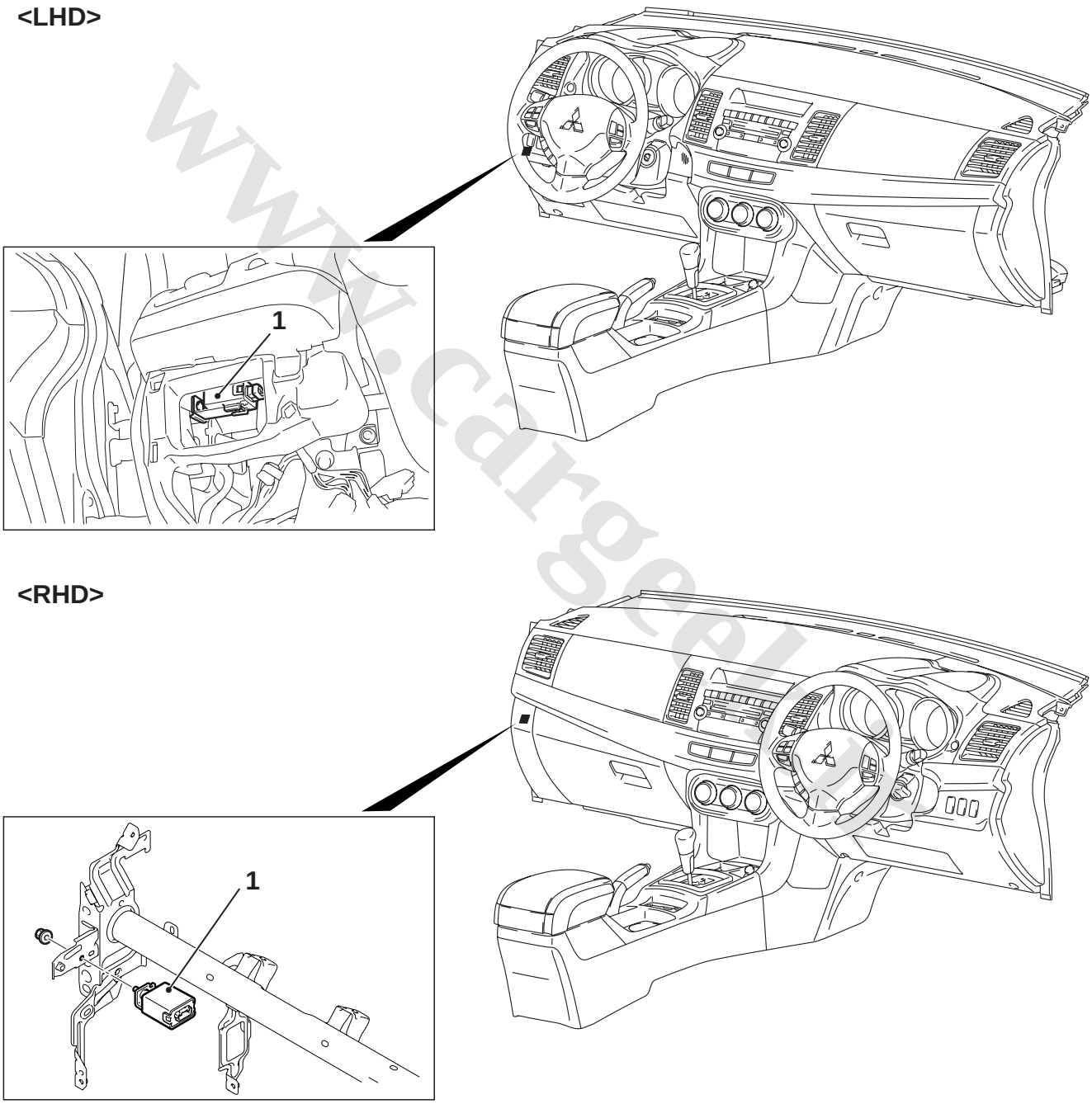

ACA01090AB

www.cargeek.ir

www.CarGeek.ir

Removal

1. LIN cutoff control unit

SECURITY ALARM SENSOR REMOVAL AND INSTALLATION

M1547004900104

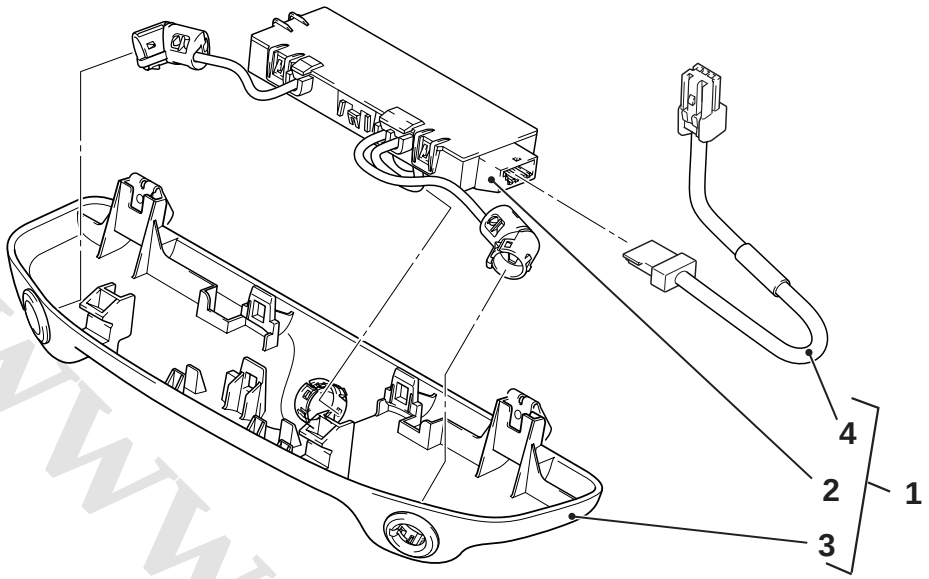

ACA00339AB

Removal Steps

1. Security alarm sensor assembly
2. Security alarm sensor

Removal Steps (Continued)

3. Security alarm sensor cover
4. Sub harness

www.cargeek.ir

www.CarGeek.ir

SECURITY ALARM SIREN REMOVAL AND INSTALLATION

M1547005000126

Pre-removal operation	Post-installation operation
• Removal of brake booster assembly (Refer to GROUP 35A – Master Cylinder Assembly and Brake Booster Assembly) <RHD> • Removal of ABS-ECU or ASC-ECU harness connector (Refer to GROUP 35B – Hydraulic Unit or GROUP 35C-Hydraulic Unit) <LHD>	• Installation of brake booster assembly (Refer to GROUP 35A – Master Cylinder Assembly and Brake Booster Assembly) <RHD> • Installation of ABS-ECU or ASC-ECU harness connector (Refer to GROUP 35B – Hydraulic Unit or GROUP 35C-Hydraulic Unit) <LHD>

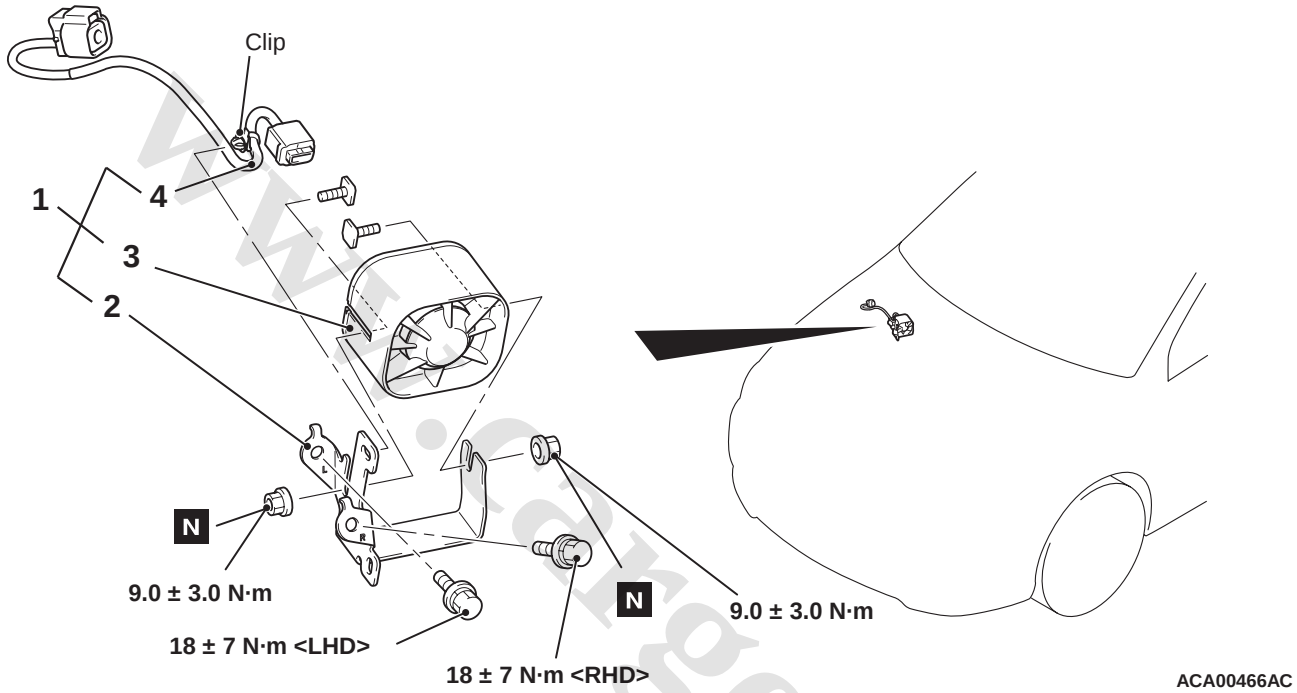

Removal Steps

1. Security alarm siren assembly
2. Security alarm siren bracket

Removal Steps (Continued)

3. Security alarm siren
4. Sub harness

www.cargeek.ir

www.CarGeek.ir

INSPECTION

LIN CUTOFF CONTROL UNIT CHECK

M1547005600043

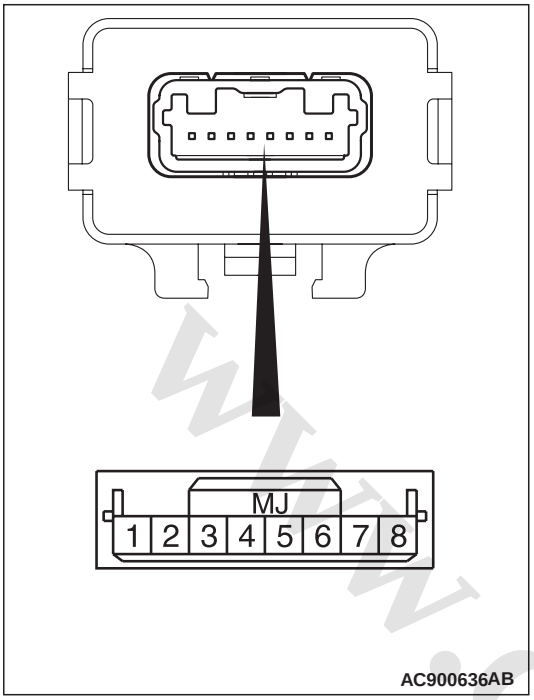

CONTINUITY CHECK

Remove the LIN cutoff control unit.(Refer to)

Terminal number	Measurement value
5 to 3	Continuity exists (2 Ω or less)

RELAY CHECK

Remove the LIN cutoff control unit.(Refer to)

System voltage	Terminal number	Normal condition
At no energisation	5 to 7	No continuity
With current supply [terminal 1 (+), terminal 8 (–)]		Continuity exists (2 Ω or less)

SECURITY INDICATOR CHECK

M1547005500035

1. Remove the centre panel.

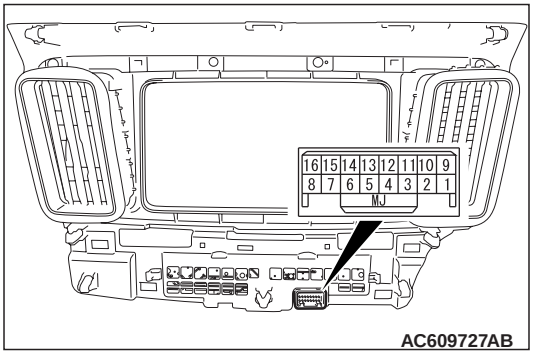

2. Connect the battery (+) terminal with the centre panel connector terminal No. 15. Then, check if the security indicator is illuminated when the battery (–) terminal and the centre panel unit connector terminal No. 12 are connected.
3. If the security indicator is illuminated, it is judged good.

NOTE: Make sure that the polarity is correct.

www.cargeek.ir

www.CarGeek.ir

GROUP 54B

LOCAL INTERCONNECT NETWORK (LIN)

www.cargeek.ir

CONTENTS

GENERAL INFORMATION 54B-2

SPECIAL TOOLS. 54B-3

TROUBLESHOOTING 54B-3

DIAGNOSIS CODE CHART 54B-3
DIAGNOSIS FUNCTION. 54B-4
DIAGNOSIS CODE PROCEDURES 54B-5
CODE NO. U0169 SUNROOF-ECU TIME-OUT 54B-5
CODE NO. U0215 POWER WINDOW MAIN SWITCH TIME-OUT. 54B-7
CODE NO. U0231 RAIN LIGHT SENSOR TIMEOUT 54B-10
CODE No. U1006 Theft alarm siren LIN timeout 54B-12
CODE No. U1007 Theft alarm sensor LIN timeout 54B-15
CODE NO. U1109 COLUMN SWITCH TIME-OUT 54B-18
CODE NO. U150B COLUMN SWITCH CHECKSUM ERROR 54B-20
CODE NO. U150C POWER WINDOW MAIN SWITCH CHECKSUM ERROR 54B-20
CODE NO. U1511 SUNROOF-ECU CHECKSUM ERROR 54B-20
CODE NO. U1512 RAIN LIGHT SENSOR CHECKSUM ERROR 54B-21
CODE NO. U1514 BIT ERROR (LIN) 54B-21
CODE NO. U1515 BUS ERROR (LIN) 54B-22
CODE NO. U1539 Theft alarm siren LINchecksum 54B-26
CODE NO. U1540 Theft alarm SNSR LINchecksum 54B-26

www.cargeek.ir

www.CarGeek.ir

GENELAL INFORMATION

M1545110000532

LIN refers to "Local Interconnect Network" that is the serial multiplex communication protocol* administered by LIN consortium. A communication circuit employing the LIN protocol connects each ECU, and switch and sensor data can be shared among ECUs, which enables more reduction in wiring.

*NOTE: *: The communications protocol has been decided in detail, from software matters such as the necessary transmission rate for communication, the system, data format, and communication timing control method to hardware matters such as the harness type and length and the resistance values.*

STRUCTURE

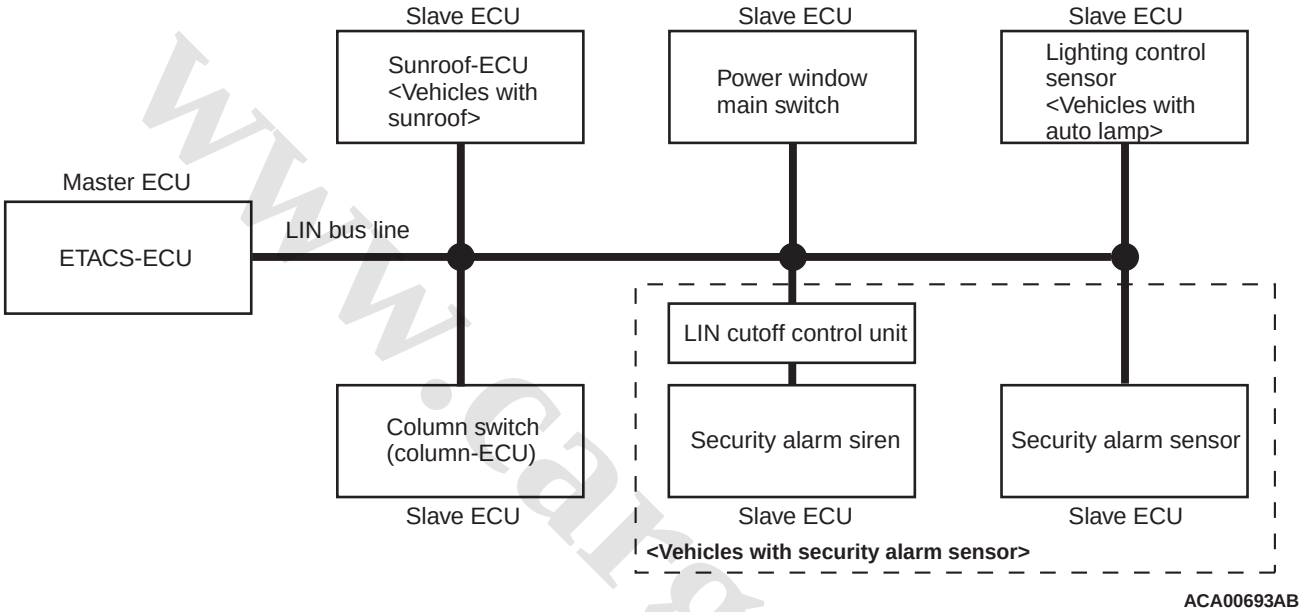

Master and slave ECUs are connected to the LIN bus lines. The master ECU is the ETACS*1-ECU, and the slave ECUs are the column switch (column-ECU), the sunroof-ECU*2, the lighting control sensor*3, the power window main switch, the security alarm siren (via LIN cutoff control unit*4)*5 and the security alarm sensor*5. The master ECU requests these slave ECUs to communicate each other via communication lines.

NOTE:

- **1: ETACS (Electronic Time and Alarm Control System)*
- **2: Vehicles with sunroof*
- **3: Vehicles with lighting control sensor*
- **4: The LIN cutoff control unit is a relay circuit to turn ON/OFF the LIN communication of security alarm siren. An ECU is not incorporated in the LIN cutoff control unit.*
- **5: Vehicles with security alarm sensor*

www.cargeek.ir

www.CarGeek.ir

SPECIAL TOOLS

M1545100100163

Tool	Number	Name	Use
a 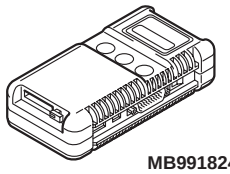 MB991824 b 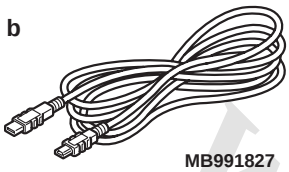 MB991827 c 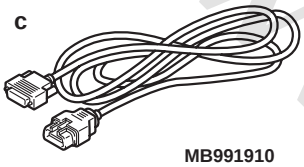 MB991910 d 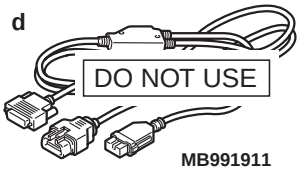 MB991911 e 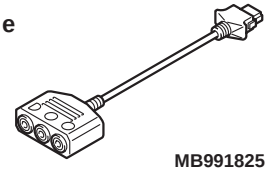 MB991825 f 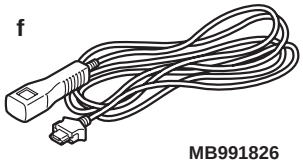 MB991826 MB991955	MB991955 a. MB991824 b. MB991827 c. MB991910 d. MB991911 e. MB991825 f. MB991826	M.U.T.-III sub-assembly a. Vehicle Communication Interface (V.C.I.) b. M.U.T.-III USB cable c. M.U.T.-III main harness A (Vehicles with CAN communication system) d. M.U.T.-III main harness B (Vehicles without CAN communication system) e. M.U.T.-III measure adapter f. M.U.T.-III trigger harness	⚠ CAUTION **For vehicles with CAN communication, use M.U.T.-III main harness A to send simulated vehicle speed. If you connect M.U.T.-III main harness B instead, the CAN communication does not function correctly.** LIN communication line check (service data and diagnosis codes)

TROUBLESHOOTING

DIAGNOSIS CODE CHART

M1545100200739

Diagnosis code No.	Diagnostic item	Reference page
U0169	Sunroof LIN timeout <Vehicles with sunroof>	
U0215	P/W SW (DR) LIN timeout	
U0231	Lighting control sensor LIN timeout <Vehicles with auto lamp>	
U1006	Security alarm siren LIN timeout <Vehicles with security alarm sensor>	

www.cargeek.ir

www.CarGeek.ir

Diagnosis code No.	Diagnostic item	Reference page
U1007	Security alarm sensor LIN timeout <Vehicles with security alarm sensor>	
U1109	Column SW LIN timeout	
U150B	Column SW checksum error	
U150C	P/W SW (DR) checksum error	
U1511	Sunroof checksum error <Vehicles with sunroof>	
U1512	Lighting control sensor checksum error <Vehicles with auto lamp>	
U1514	Bit error (LIN)	
U1515	No-Bus activity error (LIN)	
U1539	Security alarm siren LIN checksum error <Vehicles with security alarm sensor>	
U1540	Security alarm SNSR.LIN checksum error <Vehicles with security alarm sensor>	

DIAGNOSIS FUNCTION

M1545104200076

HOW TO READ DIAGNOSIS CODE

Refer to GROUP 00 – Diagnosis function .

HOW TO ERASE DIAGNOSIS CODE

Refer to GROUP 00 – Diagnosis function .

www.cargeek.ir

www.cargeek.ir

www.CarGeek.ir

DIAGNOSIS CODE PROCEDURES

Code No.U0169 Sunroof LIN timeout <Vehicles with sunroof>

⚠ CAUTION
Before replacing the ECU, ensure that the communication circuit is normal.

Sunroof Motor Assembly LIN Communication Circuit

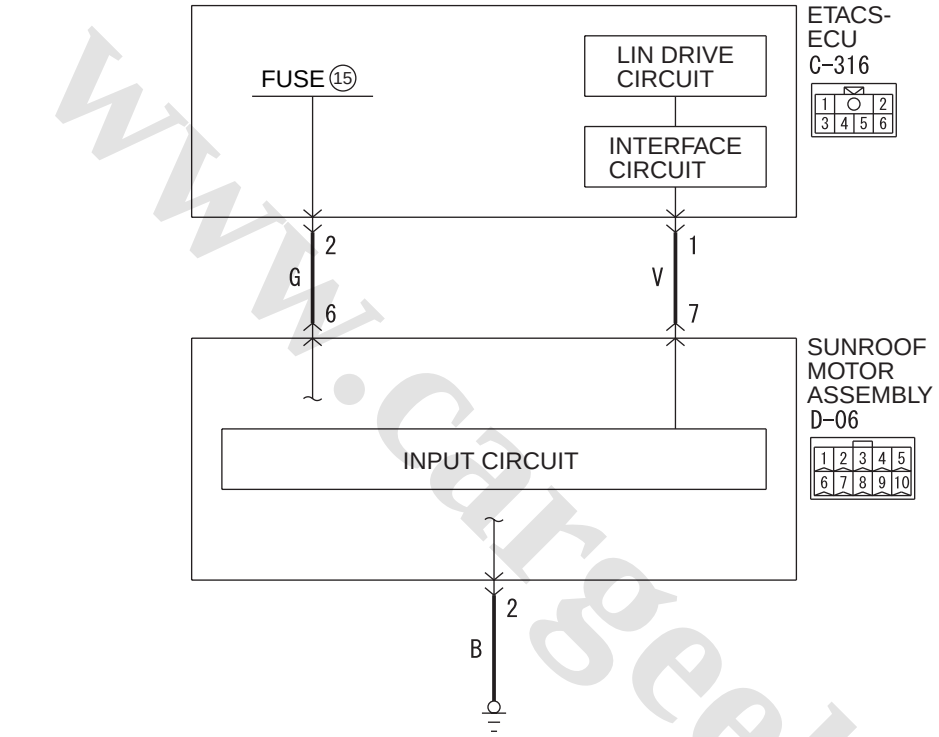

Wire colour code
B : Black LG : Light green G : Green L : Blue W : White Y : Yellow SB : Sky blue
BR : Brown O : Orange GR : Grey R : Red P : Pink V : Violet PU : Purple SI : Silver WAH54X058A

Connector: C-316 <LHD>
ETACS-ECU

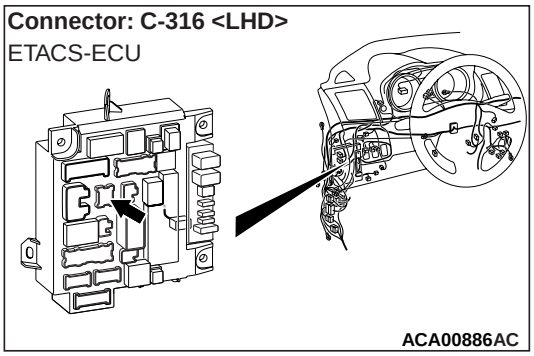

Connector: C-316 <RHD>
ETACS-ECU

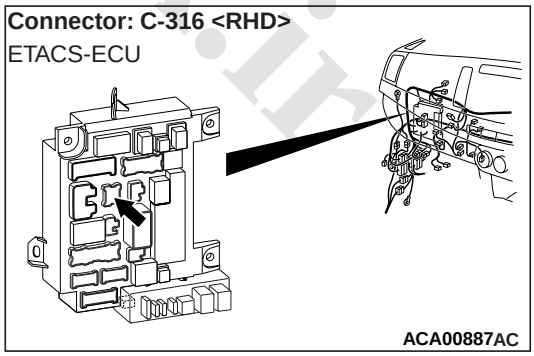

www.cargeek.ir

www.CarGeek.ir

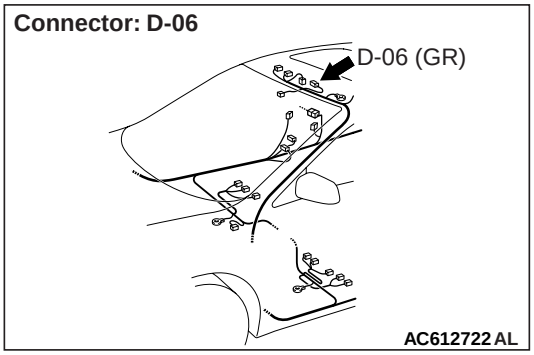

JUDGEMENT CRITERIA

The ETACS-ECU will set diagnosis code No. U0169 when no signals are received from the sunroof motor assembly.

PROBABLE CAUSES

- Faulty sunroof motor assembly
- Malfunction of the LIN bus

DIAGNOSIS PROCEDURE

STEP 1. Connector check: C-316 ETACS-ECU connector, D-06 sunroof motor assembly connector

Q: Is the check result normal?
YES : Go to Step 2.
NO : Repair the defective connector.

STEP 2. Resistance measurement at the D-06 sunroof motor assembly connector

(1) Disconnect the connector, and measure at the wiring harness side.
(2) Measure the resistance between the D-06 sunroof motor assembly connector terminal No. 2 and the body earth.

OK: Continuity exists (2 Ω or less)

Q: Is the check result normal?
YES : Go to Step 4.
NO : Go to Step 3.

STEP 3. Wiring harness check from D-06 sunroof motor assembly connector terminal No. 2 to body earth

Check the earth wires for open circuit.

Q: Is the check result normal?
YES : The trouble can be an intermittent malfunction (Refer to GROUP 00 – How to use Troubleshooting/inspection Service Points – How to Cope with Intermittent Malfunction).
NO : Repair the wiring harness.

STEP 4. Voltage measurement at the D-06 sunroof motor assembly connector.

(1) Disconnect the connector, and measure at the wiring harness side.
(2) Measure the voltage between the D-06 sunroof motor assembly connector terminal No. 6 and the body earth.

OK: System voltage

Q: Is the check result normal?
YES : Go to Step 6.
NO : Go to Step 5.

STEP 5. Wiring harness check between the D-06 sunroof motor assembly connector terminal No. 6 and the C-316 ETACS-ECU connector terminal No. 2

Check the power supply line for open circuit and short circuit.

Q: Is the check result normal?
YES : The trouble can be an intermittent malfunction (Refer to GROUP 00 – How to use Troubleshooting/inspection Service Points – How to Cope with Intermittent Malfunction).
NO : Repair the wiring harness.

STEP 6. Check the wiring harness wires between C-316 ETACS-ECU connector terminal No. 1 and D-06 sunroof motor assembly connector terminal No. 7.

Check the communication lines for open circuit.

Q: Is the check result normal?
YES : Go to Step 7.
NO : Repair the wiring harness.

STEP 7. Check whether the diagnosis code is reset.

Check again if the diagnosis code is set to the ETACS-ECU.
(1) Erase the diagnosis code.
(2) Turn the ignition switch from the LOCK (OFF) position to the ON position.
(3) Check if diagnosis code is set.

Q: Is the diagnosis code set?
YES : Replace the sunroof motor assembly.
NO : A poor connection, open circuit, or other intermittent malfunctions in the LIN bus lines between the sunroof motor assembly and the ETACS-ECU (Refer to GROUP 00 – How to Cope with Intermittent Malfunction).

www.cargeek.ir

www.CarGeek.ir

Code No.U0215 P/W SW (DR) LIN timeout

⚠ CAUTION

Before replacing the ECU, ensure that the communication circuit is normal.

Power Window Main Switch LIN Communication Circuit

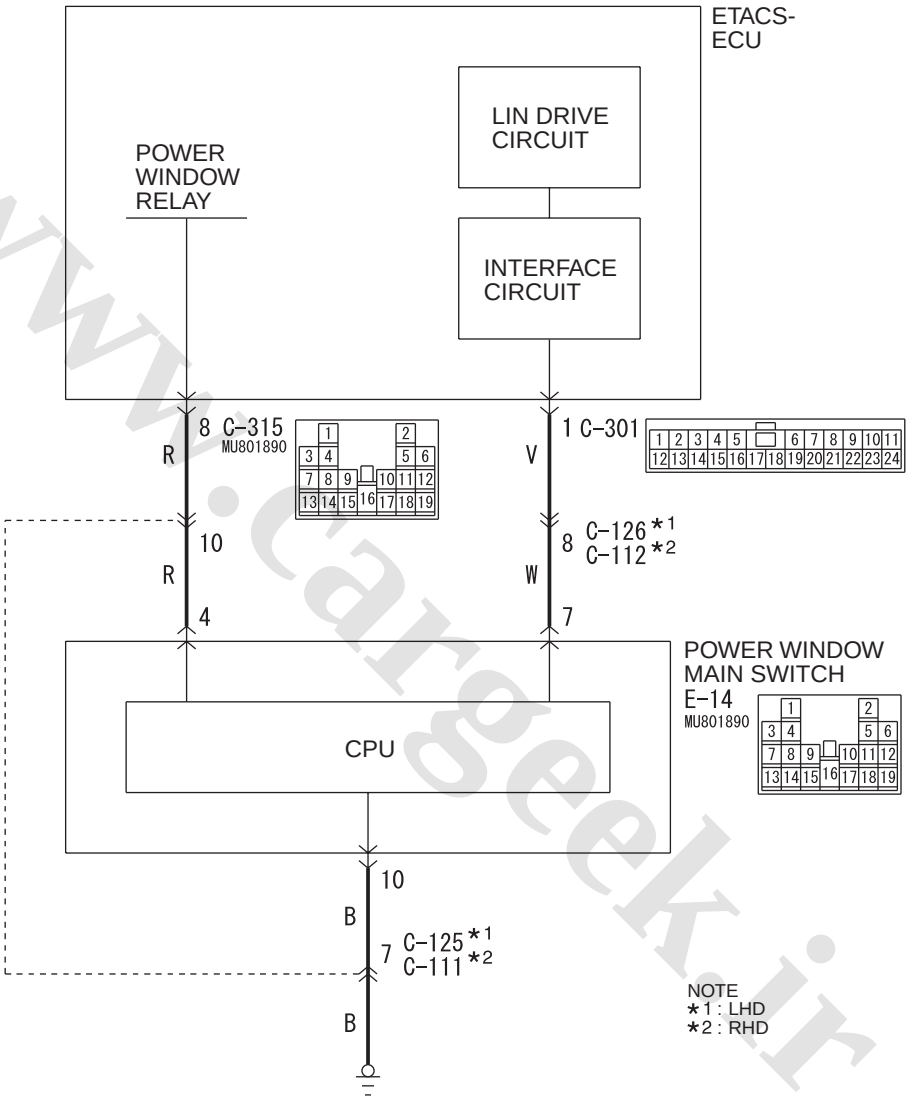

Wire colour code
B : Black LG : Light green G : Green L : Blue W : White Y : Yellow SB : Sky blue
BR : Brown O : Orange GR : Grey R : Red P : Pink V : Violet PU : Purple SI : Silver

WDH54E000A

www.cargeek.ir

www.CarGeek.ir

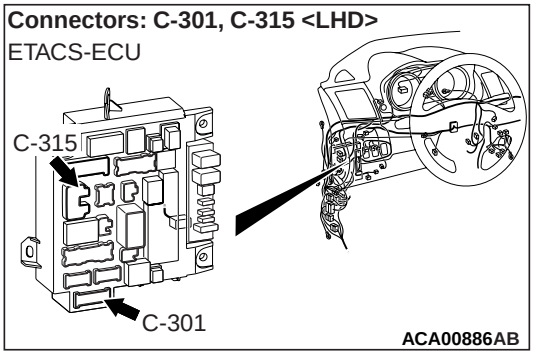

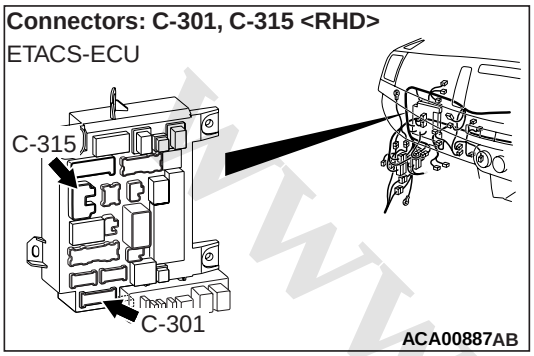

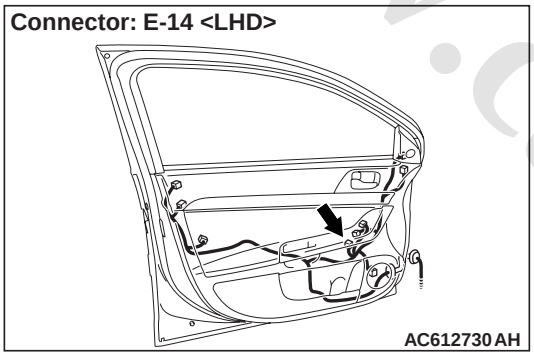

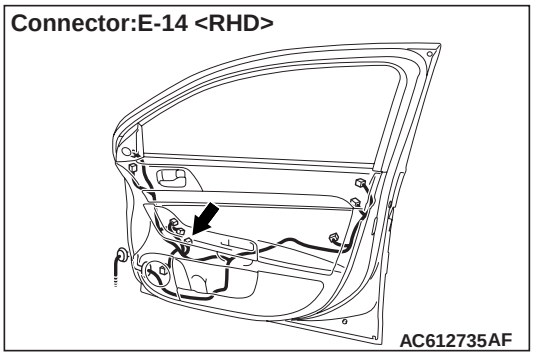

JUDGEMENT CRITERIA

The ETACS-ECU will set diagnosis code No. U0215 when no signals are received from the power window main switch.

PROBABLE CAUSES

- Faulty power window main switch
- Malfunction of the LIN bus

DIAGNOSIS PROCEDURE

STEP 1. Connector check: C-301 and C-315 ETACS-ECU connector, E-14 power window main switch connector

Q: Is the check result normal?
YES : Go to Step 2.
NO : Repair the defective connector.

STEP 2. Resistance measurement at the E-14 power window main switch connector

(1) Disconnect the connector, and measure at the wiring harness side.
(2) Measure the resistance between the E-14 power window main switch connector terminal No. 10 and the body earth.

OK: Continuity exists (2 Ω or less)

Q: Is the check result normal?
YES : Go to Step 4.
NO : Go to Step 3.

STEP 3. Wiring harness check from E-14 power window main switch connector terminal No. 10 to body earth

NOTE: Prior to the wiring harness inspection, check intermediate connector C-125 <LHD> or C-111 <RHD>, and repair if necessary.
Check the earth wires for open circuit.

Q: Is the check result normal?
YES : The trouble can be an intermittent malfunction (Refer to GROUP 00 – How to use Troubleshooting/inspection Service Points – How to Cope with Intermittent Malfunction).
NO : Repair the wiring harness.

STEP 4. Voltage measurement at the E-14 power window main switch connector.

(1) Disconnect the connector, and measure at the wiring harness side.
(2) Ignition switch: ON position
(3) Measure the voltage between the E-14 power window main switch connector terminal No. 4 and the body earth.

OK: System voltage

Q: Is the check result normal?
YES : Go to Step 6.
NO : Go to Step 5.

www.cargeek.ir

www.CarGeek.ir

STEP 5. Wiring harness check between the E-14 power window main switch connector terminal No. 4 and the C-315 ETACS-ECU connector terminal No. 8

Check the power supply line for open circuit and short circuit.

NOTE: Prior to the wiring harness inspection, check intermediate connector C-125 <LHD> or C-111 <RHD>, and repair if necessary.

Q: Is the check result normal?

YES : The trouble can be an intermittent malfunction (Refer to GROUP 00 – How to use Troubleshooting/inspection Service Points – How to Cope with Intermittent Malfunction).

NO : Repair the wiring harness.

STEP 6. Check the wiring harness wires between C-301 ETACS-ECU connector terminal No. 1 and E-14 power window main switch connector terminal No. 7.

Check the communication lines for open circuit.

NOTE: Prior to the wiring harness inspection, check intermediate connector C-126 <LHD> or C-112 <RHD>, and repair if necessary.

Q: Is the check result normal?

YES : Go to Step 7.

NO : Repair the wiring harness.

STEP 7. Check whether the diagnosis code is reset.

Check again if the diagnosis code is set to the ETACS-ECU.

(1) Erase the diagnosis code.
(2) Turn the ignition switch from "LOCK" (OFF) position to "ON" position.
(3) Check if diagnosis code is set.

Q: Is the diagnosis code set?

YES : Replace the power window main switch.

NO : A poor connection, open circuit, or other intermittent malfunctions in the LIN bus lines between the power window main switch and the ETACS-ECU (Refer to GROUP 00 – How to Cope with Intermittent Malfunction).

www.cargeek.ir

www.CarGeek.ir

Code No.U0231 Lighting control sensor LIN timeout <Vehicles with auto lamp>

⚠ CAUTION

Before replacing the ECU, ensure that the communication circuit is normal.

Lighting Control Sensor LIN Communication Circuit

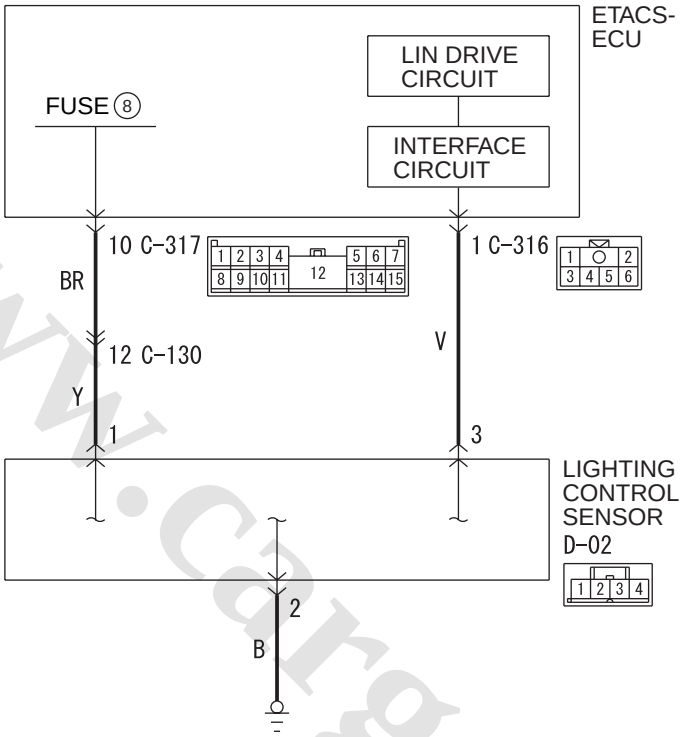

Wire colour code
B : Black LG : Light green G : Green L : Blue W : White Y : Yellow SB : Sky blue
BR : Brown O : Orange GR : Grey R : Red P : Pink V : Violet PU : Purple SI : Silver WDH54E001A

Connector: C-316 <LHD>
ETACS-ECU

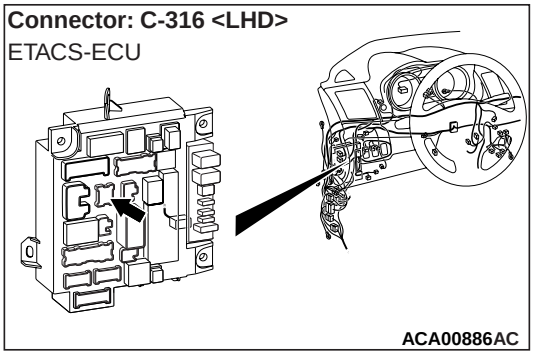

Connector: D-02

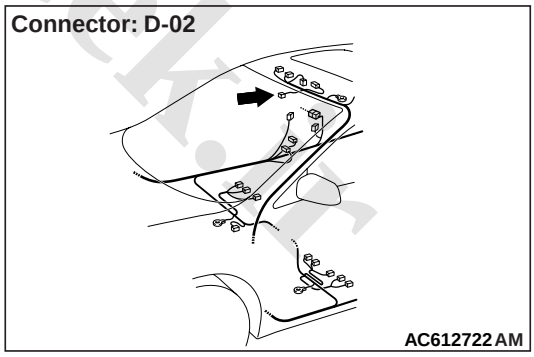

Connector: C-316 <RHD>
ETACS-ECU

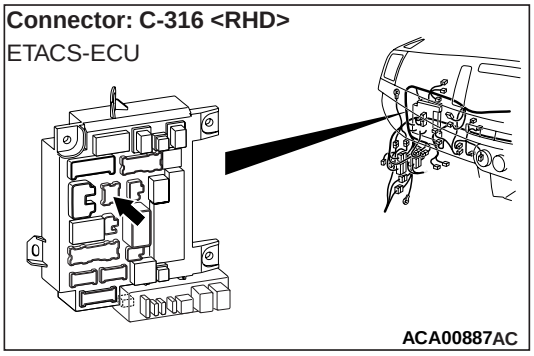

JUDGEMENT CRITERIA

The ETACS-ECU will set diagnosis code No. U0231 when no signals are received from the lighting control sensor.

PROBABLE CAUSES

- Faulty lighting control sensor
- Malfunction of the LIN bus

www.cargeek.ir

www.CarGeek.ir

DIAGNOSIS PROCEDURE

STEP 1. Connector check: C-316 ETACS-ECU connector, D-02 lighting control sensor connector

Q: Is the check result normal?
YES : Go to Step 2.
NO : Repair the defective connector.

STEP 2. Resistance measurement at the D-02 lighting control sensor connector
(1) Disconnect the connector, and measure at the wiring harness side.
(2) Measure the resistance between the D-02 lighting control sensor connector terminal No. 2 and the body earth.

OK: Continuity exists (2 Ω or less)

Q: Is the check result normal?
YES : Go to Step 4.
NO : Go to Step 3.

STEP 3. Wiring harness check from D-02 lighting control sensor connector terminal No. 2 to body earth
Check the earth wires for open circuit.

Q: Is the check result normal?
YES : The trouble can be an intermittent malfunction (Refer to GROUP 00 – How to use Troubleshooting/inspection Service Points – How to Cope with Intermittent Malfunction).
NO : Repair the wiring harness.

STEP 4. Voltage measurement at the D-02 lighting control sensor connector.
(1) Disconnect the connector, and measure at the wiring harness side.
(2) Measure the voltage between the D-02 lighting control sensor connector terminal No. 1 and the body earth.

OK: System voltage

Q: Is the check result normal?
YES : Go to Step 6.
NO : Go to Step 5.

STEP 5. Wiring harness check between the D-02 lighting control sensor connector terminal No. 1 and the C-317 ETACS-ECU connector terminal No. 10
Check the power supply line for open circuit and short circuit.

NOTE: Prior to the wiring harness inspection, check intermediate connector C-130, and repair if necessary.

Q: Is the check result normal?
YES : The trouble can be an intermittent malfunction (Refer to GROUP 00 – How to use Troubleshooting/inspection Service Points – How to Cope with Intermittent Malfunction).
NO : Repair the wiring harness.

STEP 6. Check the wiring harness wires between C-316 ETACS-ECU connector terminal No. 1 and D-02 lighting control sensor connector terminal No. 3.
Check the communication lines for open circuit.

Q: Is the check result normal?
YES : Go to Step 7.
NO : Repair the wiring harness.

STEP 7. Check whether the diagnosis code is reset.
Check again if the diagnosis code is set to the ETACS-ECU.
(1) Erase the diagnosis code.
(2) Turn the ignition switch from the LOCK (OFF) position to the ON position.
(3) Check if diagnosis code is set.

Q: Is the diagnosis code set?
YES : Replace the lighting control sensor.
NO : A poor connection, open circuit, or other intermittent malfunctions in the LIN bus lines between the lighting control sensor and the ETACS-ECU (Refer to GROUP 00 – How to Cope with Intermittent Malfunction).

www.cargeek.ir

www.CarGeek.ir

Code No.U1006 Security alarm siren LIN timeout <Vehicles with security alarm sensor>

⚠ CAUTION

Before replacing the ECU, ensure that the communication circuit is normal.

Security Alarm Siren LIN Communication Circuit

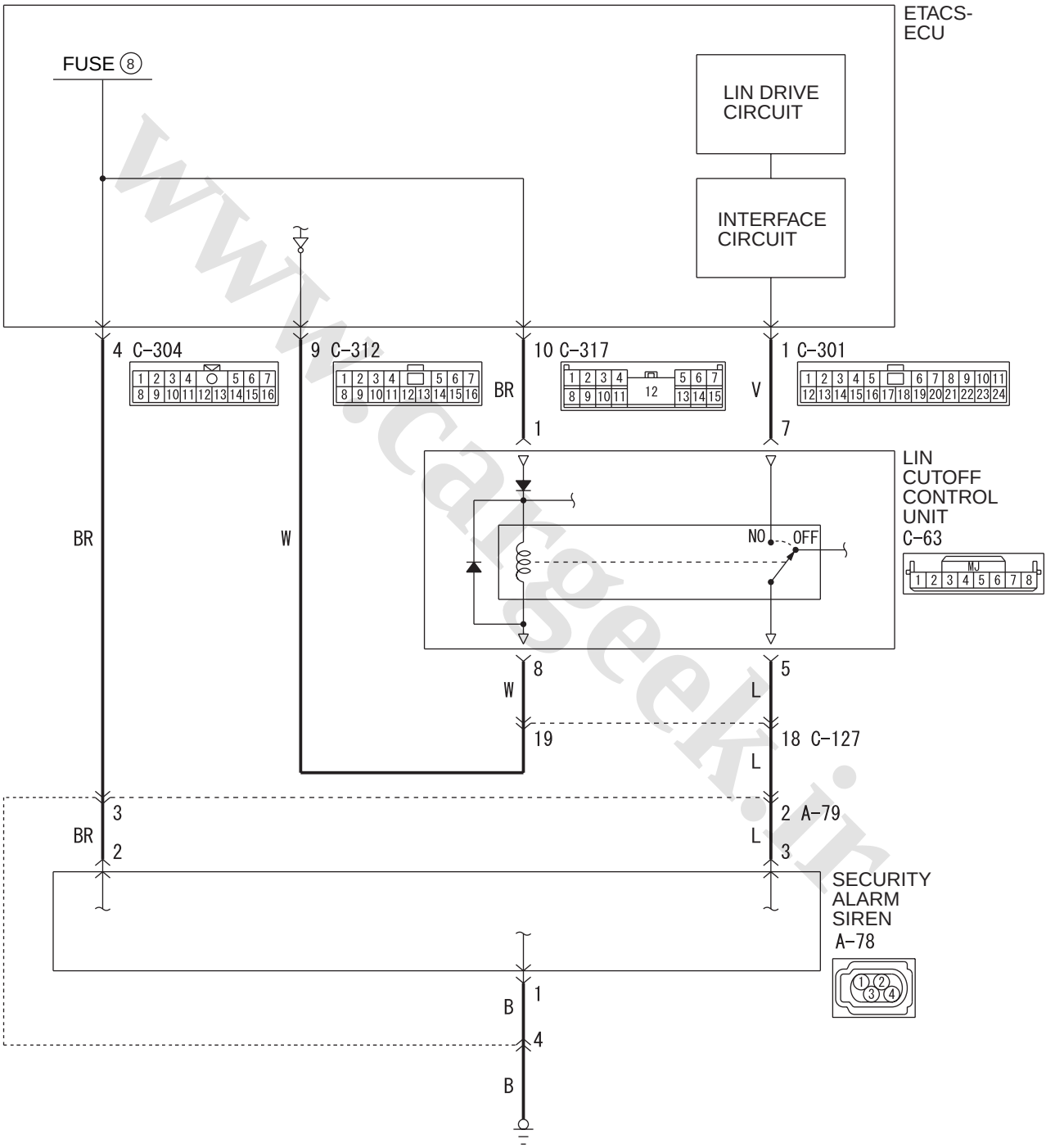

Wire colour code
B : Black LG : Light green G : Green L : Blue W : White Y : Yellow SB : Sky blue
BR : Brown O : Orange GR : Grey R : Red P : Pink V : Violet PU : Purple SI : Silver

WDH54E002A

www.cargeek.ir

www.CarGeek.ir

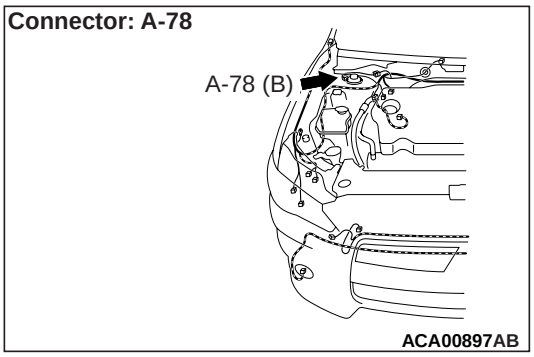

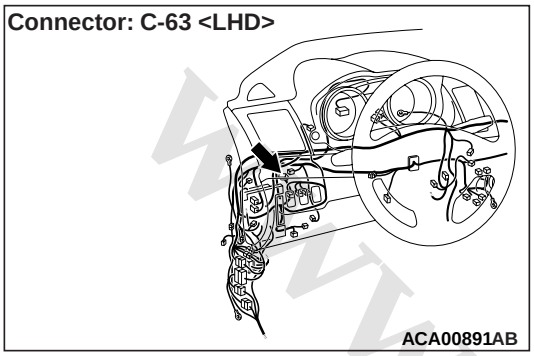

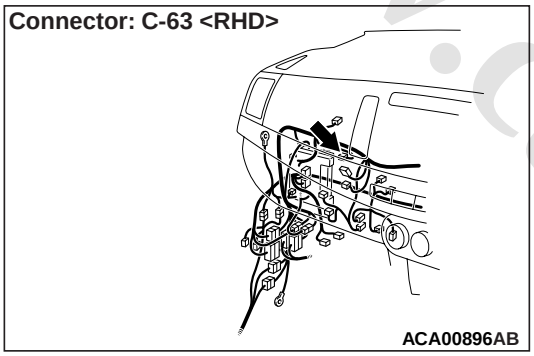

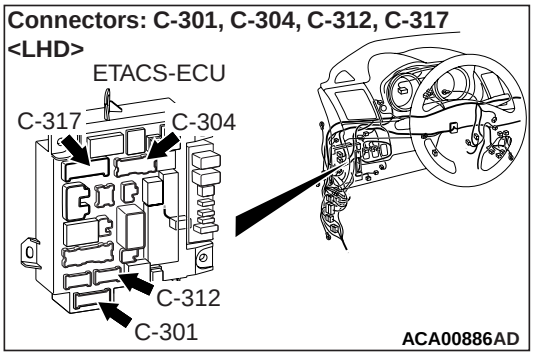

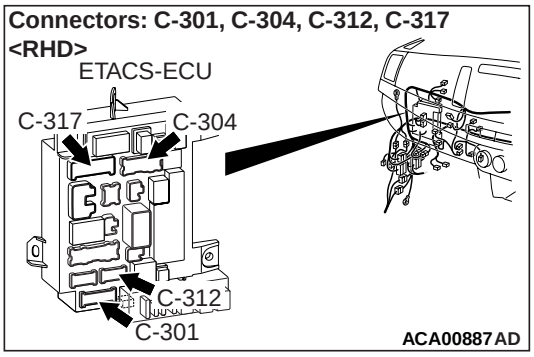

JUDGEMENT CRITERIA

The ETACS-ECU will set diagnosis code No. U1006 when no signals are received from the security alarm siren.

PROBABLE CAUSES

- Faulty security alarm siren
- Faulty LIN cutoff control unit
- Malfunction of the LIN bus

DIAGNOSIS PROCEDURE

STEP 1. Connector check: C-301, C-304, C-312 and C-317 ETACS-ECU connectors, C-63 LIN cutoff control unit connector, A-78 security alarm siren connector

Q: Is the check result normal?
YES : Go to Step 2.
NO : Repair the defective connector.

STEP 2. Resistance measurement at the A-78 security alarm siren connector

(1) Disconnect the connector, and measure at the wiring harness side.
(2) Measure the resistance between the A-78 security alarm siren connector terminal No. 1 and the body earth.

OK: Continuity exists (2 Ω or less)

Q: Is the check result normal?
YES : Go to Step 4.
NO : Go to Step 3.

STEP 3. Wiring harness check from A-78 security alarm siren connector terminal No. 1 to body earth

Check the earth wires for open circuit.

NOTE: Prior to the wiring harness inspection, check intermediate connector A-79, and repair if necessary.

Q: Is the check result normal?
YES : The trouble can be an intermittent malfunction (Refer to GROUP 00 – How to use Troubleshooting/inspection Service Points – How to Cope with Intermittent Malfunction).
NO : Repair the wiring harness.

STEP 4. Voltage measurement at the A-78 security alarm siren connector.

(1) Disconnect the connector, and measure at the wiring harness side.
(2) Measure the voltage between the A-78 security

www.cargeek.ir

www.CarGeek.ir

alarm siren connector terminal No. 2 and the body earth.

OK: System voltage

Q: Is the check result normal?
YES : Go to Step 6.
NO : Go to Step 5.

STEP 5. Wiring harness check between the A-78 security alarm siren connector terminal No. 2 and the C-304 ETACS-ECU connector terminal No. 4
Check the power supply line for open circuit and short circuit.

NOTE: Prior to the wiring harness inspection, check intermediate connector A-79, and repair if necessary.

Q: Is the check result normal?
YES : The trouble can be an intermittent malfunction (Refer to GROUP 00 – How to use Troubleshooting/inspection Service Points – How to Cope with Intermittent Malfunction).
NO : Repair the wiring harness.

STEP 6. LIN cutoff control unit check
Check the LIN cutoff control unit. Refer to GROUP 54A – Security Alarm System .

Q: Is the check result normal?
YES : Go to Step 7.
NO : Replace the LIN cutoff control unit.

STEP 7. Voltage measurement at the C-312 ETACS-ECU connector.
(1) Disconnect the connector, and measure at the wiring harness side.
(2) Measure the voltage between the C-312 ETACS-ECU connector terminal No. 9 and the body earth.

OK: System voltage

Q: Is the check result normal?
YES : Go to Step 10.
NO : Go to Step 8.

STEP 8. Wiring harness check between the C-317 ETACS-ECU connector terminal No. 10 and the C-63 LIN cutoff control unit connector terminal No. 1
Check the power supply line for open circuit and short circuit.

Q: Is the check result normal?
YES : Go to Step 9.
NO : Repair the wiring harness.

STEP 9. Wiring harness check between the C-63 LIN cutoff control unit connector terminal No. 8 and the C-312 ETACS-ECU connector terminal No. 9
Check the power supply line for open circuit and short circuit.

NOTE: Prior to the wiring harness inspection, check intermediate connector C-127, and repair if necessary.

Q: Is the check result normal?
YES : Go to Step 12.
NO : Repair the wiring harness.

STEP 10. Check the wiring harness wires between C-301 ETACS-ECU connector terminal No. 1 and C-63 LIN cutoff control unit connector terminal No. 7.
Check the communication lines for open circuit.

Q: Is the check result normal?
YES : Go to Step 11.
NO : Repair the wiring harness.

STEP 11. Check the wiring harness wires between C-63 LIN cutoff control unit connector terminal No. 5 and A-78 security alarm siren connector terminal No. 3.

NOTE: Prior to the wiring harness inspection, check intermediate connectors A-79 and C-127, and repair if necessary.
Check the communication lines for open circuit.

Q: Is the check result normal?
YES : Go to Step 12.
NO : Repair the wiring harness.

STEP 12. Replace the security alarm siren temporarily, and check whether the diagnosis code is set.
Check again if the diagnosis code is set to the ETACS-ECU.
(1) Erase the diagnosis code.
(2) Turn the ignition switch from the LOCK (OFF) position to the ON position.
(3) Check if diagnosis code is set.

Q: Is the diagnosis code set?
YES : Replace the ETACS-ECU.
NO : Replace the security alarm siren.

www.cargeek.ir

www.CarGeek.ir

Code No.U1007 Security alarm sensor LIN timeout <Vehicles with security alarm sensor>

⚠ CAUTION

Before replacing the ECU, ensure that the communication circuit is normal.

Security Alarm Sensor LIN Communication Circuit

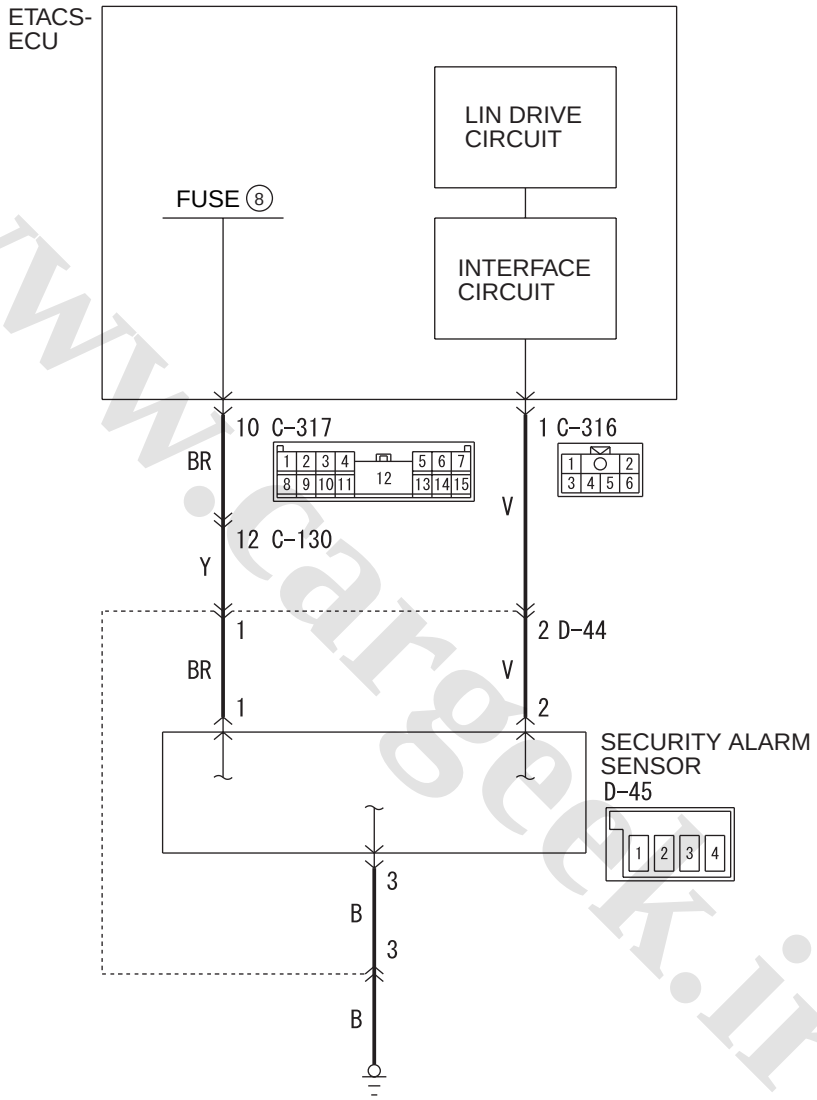

Wire colour code
B : Black LG : Light green G : Green L : Blue W : White Y : Yellow SB : Sky blue
BR : Brown O : Orange GR : Grey R : Red P : Pink V : Violet PU : Purple SI : Silver

WDH54E003A

www.cargeek.ir

www.CarGeek.ir

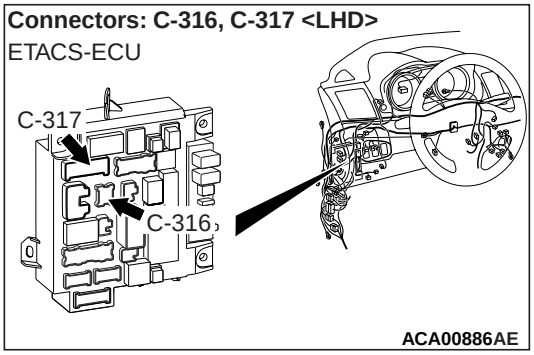

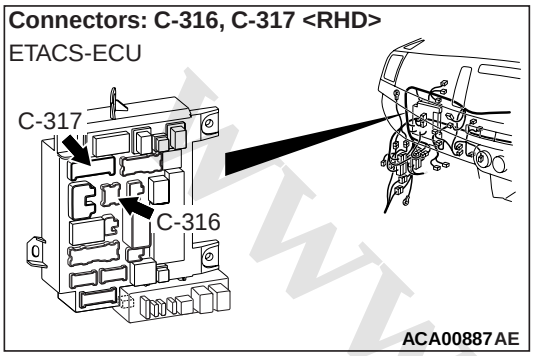

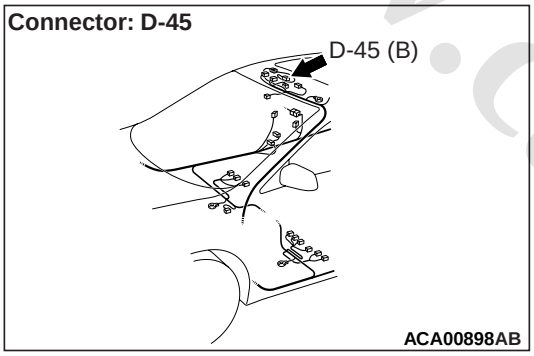

JUDGEMENT CRITERIA

The ETACS-ECU will set diagnosis code No. U1007 when no signals are received from the security alarm sensor.

PROBABLE CAUSES

- Faulty security alarm sensor
- Malfunction of the LIN bus

DIAGNOSIS PROCEDURE

STEP 1. Connector check: C-316 and C-317 ETACS-ECU connectors, D-134 security alarm sensor connector

Q: Is the check result normal?
YES : Go to Step 2.
NO : Repair the defective connector.

STEP 2. Resistance measurement at the D-45 security alarm sensor connector

(1) Disconnect the connector, and measure at the wiring harness side.
(2) Measure the resistance between the D-45 security alarm sensor connector terminal No. 3 and the body earth.

OK: Continuity exists (2 Ω or less)

Q: Is the check result normal?
YES : Go to Step 4.
NO : Go to Step 3.

STEP 3. Wiring harness check from D-45 security alarm sensor connector terminal No. 3 to body earth

Check the earth wires for open circuit.

NOTE: Prior to the wiring harness inspection, check intermediate connector D-44, and repair if necessary.

Q: Is the check result normal?
YES : The trouble can be an intermittent malfunction (Refer to GROUP 00 – How to use Troubleshooting/inspection Service Points – How to Cope with Intermittent Malfunction).
NO : Repair the wiring harness.

STEP 4. Voltage measurement at the D-45 security alarm sensor connector.

(1) Disconnect the connector, and measure at the wiring harness side.
(2) Measure the voltage between the D-45 security alarm sensor connector terminal No. 1 and the body earth.

OK: System voltage

Q: Is the check result normal?
YES : Go to Step 6.
NO : Go to Step 5.

STEP 5. Wiring harness check between the D-45 security alarm sensor connector terminal No. 1 and the C-317 ETACS-ECU connector terminal No. 10

Check the power supply line for open circuit and short circuit.

NOTE: Prior to the wiring harness inspection, check intermediate connector D-44, and repair if necessary.

Q: Is the check result normal?
YES : The trouble can be an intermittent malfunction (Refer to GROUP 00 – How to use Troubleshooting/inspection Service Points – How to Cope with Intermittent Malfunction).
NO : Repair the wiring harness.

www.cargeek.ir

www.CarGeek.ir

STEP 6. Check the wiring harness wires between C-316 ETACS-ECU connector terminal No. 1 and D-45 security alarm sensor connector terminal No. 2.

Check the communication lines for open circuit.

NOTE: Prior to the wiring harness inspection, check intermediate connector C-130 and D-44, and repair if necessary.

Q: Is the check result normal?

YES : Go to Step 7.

NO : Repair the wiring harness.

STEP 7. Check whether the diagnosis code is reset.

Check again if the diagnosis code is set to the ETACS-ECU.

(1) Erase the diagnosis code.

(2) Turn the ignition switch from the LOCK (OFF) position to the ON position.

(3) Check if diagnosis code is set.

Q: Is the diagnosis code set?

YES : Replace the security alarm sensor.

NO : A poor connection, open circuit, or other intermittent malfunctions in the LIN bus lines between the security alarm sensor and the ETACS-ECU (Refer to GROUP 00 – How to Cope with Intermittent Malfunction).

www.cargeek.ir

www.cargeek.ir

www.CarGeek.ir

Code No.U1109 Column SW LIN timeout

⚠ CAUTION

Before replacing the ECU, ensure that the communication circuit is normal.

Column Switch LIN Communication Circuit

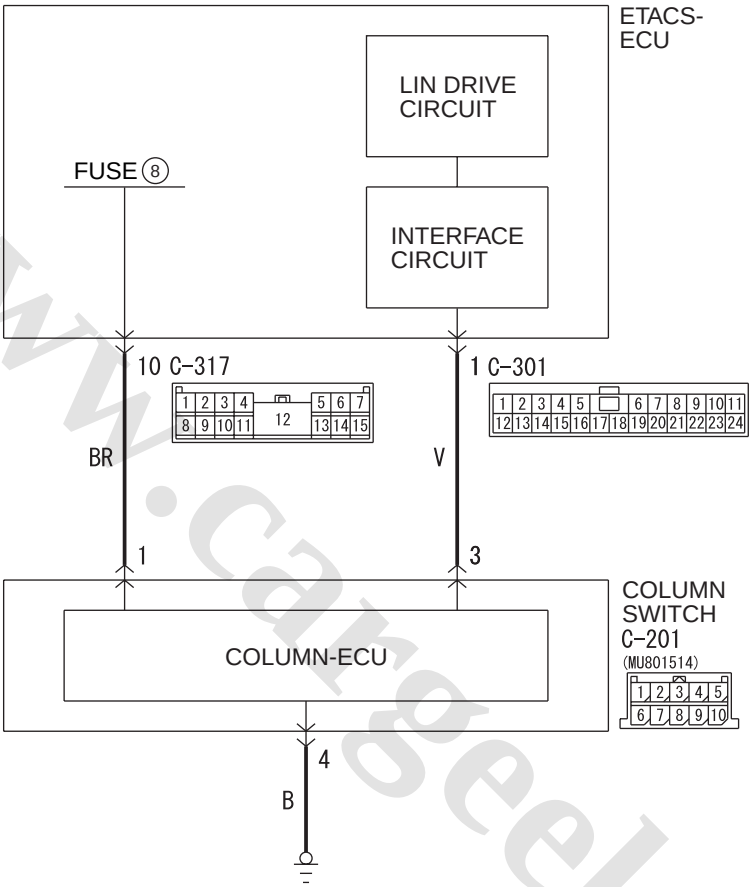

Wire colour code
B : Black LG : Light green G : Green L : Blue W : White Y : Yellow SB : Sky blue
BR : Brown O : Orange GR : Grey R : Red P : Pink V : Violet PU : Purple SI : Silver

WBH54E000A

Connector: C-201 <LHD>

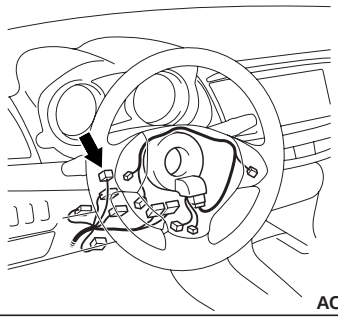

AC612708AT

Connector: C-201 <RHD>

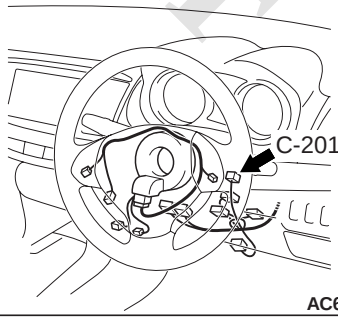

AC612716AK

www.cargeek.ir

www.CarGeek.ir

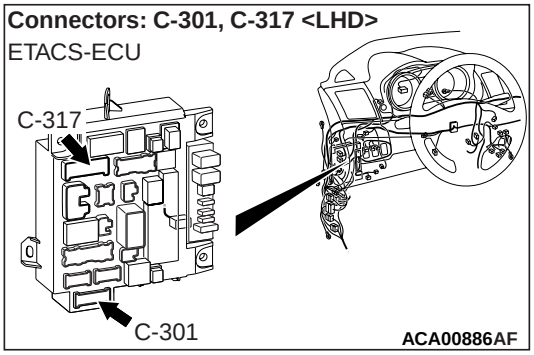

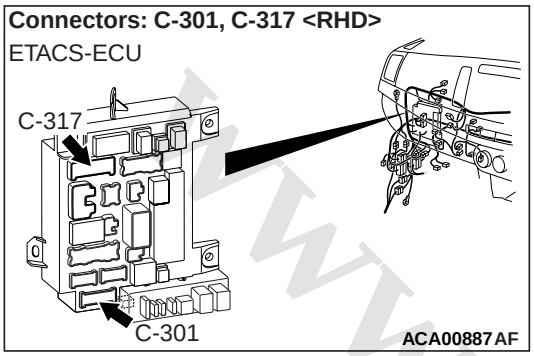

JUDGEMENT CRITERIA

The ETACS-ECU will set diagnosis code No. U1109 when no signals are received from the column switch (column switch ECU).

PROBABLE CAUSES

- Faulty Lighting switch
- Malfunction of the LIN bus

DIAGNOSIS PROCEDURE

STEP 1. Connector check: C-301 ETACS-ECU connector, C-201 column switch connector

Q: Is the check result normal?
YES : Go to Step 2.
NO : Repair the defective connector.

STEP 2. Resistance measurement at the C-201 column switch connector

(1) Disconnect the connector, and measure at the wiring harness side.
(2) Measure the resistance between the C-201 column switch connector terminal No. 4 and the body earth.

OK: Continuity exists (2 Ω or less)

Q: Is the check result normal?
YES : Go to Step 4.
NO : Go to Step 3.

STEP 3. Wiring harness check from C-201 column switch connector terminal No. 4 to body earth

Check the earth wires for open circuit.

Q: Is the check result normal?
YES : The trouble can be an intermittent malfunction (Refer to GROUP 00 – How to use Troubleshooting/inspection Service Points – How to Cope with Intermittent Malfunction).
NO : Repair the wiring harness.

STEP 4. Voltage measurement at the C-201 column switch connector.

(1) Disconnect the connector, and measure at the wiring harness side.
(2) Measure the voltage between the C-201 column switch connector terminal No. 1 and the body earth.

OK: System voltage

Q: Is the check result normal?
YES : Go to Step 6.
NO : Go to Step 5.

STEP 5. Wiring harness check between the C-201 column switch connector terminal No. 1 and the C-317 ETACS-ECU connector terminal No. 10

Check the power supply line for open circuit and short circuit.

Q: Is the check result normal?
YES : The trouble can be an intermittent malfunction (Refer to GROUP 00 – How to use Troubleshooting/inspection Service Points – How to Cope with Intermittent Malfunction).
NO : Repair the wiring harness.

STEP 6. Check the wiring harness wires between C-301 ETACS-ECU connector terminal No. 1 and C-201 column switch connector terminal No. 3.

Check the communication lines for open circuit and short circuit.

Q: Is the check result normal?
YES : Go to Step 7.
NO : Repair the wiring harness.

STEP 7. Check whether the diagnosis code is reset.

Check again if the diagnosis code is set to the ETACS-ECU.
(1) Erase the diagnosis code.

www.cargeek.ir

www.CarGeek.ir

(2) Turn the ignition switch from "LOCK" (OFF) position to "ON" position.
(3) Check if diagnosis code is set.

Q: Is the diagnosis code set?

YES : Replace the lighting switch <LHD> or wiper/washer switch <RHD>.
NO : A poor connection, open circuit, or other intermittent malfunctions in the LIN bus lines between the column switch and the ETACS-ECU (Refer to GROUP 00 – How to Cope with Intermittent Malfunction).

Code No.U150B Column SW checksum error

JUDGMENT CRITERIA
The ETACS-ECU will set diagnosis code No. U150B when abnormal signals are received from the column switch (column switch ECU).

PROBABLE CAUSES
- Faulty lighting switch

DIAGNOSIS PROCEDURE

Check whether the diagnosis code is reset.
Check again if the diagnosis code is set to the ETACS-ECU.
(1) Erase the diagnosis code.
(2) Turn the ignition switch from "LOCK" (OFF) position to "ON" position.
(3) Check if diagnosis code is set.

Q: Is the diagnosis code set?
YES : Replace the lighting switch.
NO : A poor connection, open circuit, or other intermittent malfunctions in the LIN bus lines between the column switch and the ETACS-ECU (Refer to GROUP 00 – How to Cope with Intermittent Malfunction).

Code No.U150C P/W SW (DR) checksum error

JUDGMENT CRITERIA
The ETACS-ECU will set diagnosis code No. U150C when abnormal signals are received from the power window main switch.

PROBABLE CAUSES
- Faulty power window main switch

DIAGNOSIS PROCEDURE

Check whether the diagnosis code is reset.
Check again if the diagnosis code is set to the ETACS-ECU.
(1) Erase the diagnosis code.
(2) Turn the ignition switch from "LOCK" (OFF) position to "ON" position.
(3) Check if diagnosis code is set.

Q: Is the diagnosis code set?
YES : Replace the power window main switch.
NO : A poor connection, open circuit, or other intermittent malfunctions in the LIN bus lines between the power window main switch and the ETACS-ECU (Refer to GROUP 00 – How to Cope with Intermittent Malfunction).

Code No.U1511 Sunroof checksum error <Vehicles with sunroof>

JUDGMENT CRITERIA
The ETACS-ECU will set diagnosis code No. U1511 when abnormal signals are received from the sunroof motor assembly.

PROBABLE CAUSES
- Faulty sunroof motor assembly

www.cargeek.ir

www.CarGeek.ir

DIAGNOSIS PROCEDURE

Check whether the diagnosis code is reset.
Check again if the diagnosis code is set to the ETACS-ECU.
(1) Erase the diagnosis code.
(2) Turn the ignition switch from "LOCK" (OFF) position to "ON" position.
(3) Check if diagnosis code is set.

Q: Is the diagnosis code set?
YES : Replace the sunroof motor assembly.
NO : A poor connection, open circuit, or other intermittent malfunctions in the LIN bus lines between the sunroof motor assembly and the ETACS-ECU (Refer to GROUP 00 – How to Cope with Intermittent Malfunction).

Code No.U1512 Lighting control sensor checksum error <Vehicles with auto lamp>

JUDGMENT CRITERIA
The ETACS-ECU will set diagnosis code No. U1512 when abnormal signals are received from the lighting control sensor.

PROBABLE CAUSES
- Faulty lighting control sensor

DIAGNOSIS PROCEDURE

Check whether the diagnosis code is reset.
Check again if the diagnosis code is set to the ETACS-ECU.
(1) Erase the diagnosis code.
(2) Turn the ignition switch from "LOCK" (OFF) position to "ON" position.
(3) Check if diagnosis code is set.

Q: Is the diagnosis code set?
YES : Replace the lighting control sensor.
NO : A poor connection, open circuit, or other intermittent malfunctions in the LIN bus lines between the lighting control sensor and the ETACS-ECU (Refer to GROUP 00 – How to Cope with Intermittent Malfunction).

Code No.U1514 Bit error (LIN)

JUDGMENT CRITERIA
The ETACS-ECU receives and sends data simultaneously. If the data contains a fault, the ETACS-ECU will set diagnosis code No. U1514.

PROBABLE CAUSES
- Malfunction of the slave ECU
- Malfunction of the ETACS-ECU
- Electrical noise generated in the LIN bus lines

DIAGNOSIS PROCEDURE

Check whether the diagnosis code is reset.
Check again if the diagnosis code is set to the ETACS-ECU.
(1) Erase the diagnosis code.
(2) Turn the ignition switch from "LOCK" (OFF) position to "ON" position.
(3) Check if diagnosis code is set.

Q: Is the diagnosis code set?
A diagnosis code other than No. U1514 is set. : Replace the appropriate ECU.
Diagnosis code No. U1514 is set. : Replace the ETACS-ECU.
The diagnosis code is not set. : The trouble can be an intermittent malfunction (GROUP 00 – How to Cope with Intermittent Malfunction).

www.cargeek.ir

www.CarGeek.ir

Code No.U1515 No-bus activity error (LIN)

LIN Communication Circuit

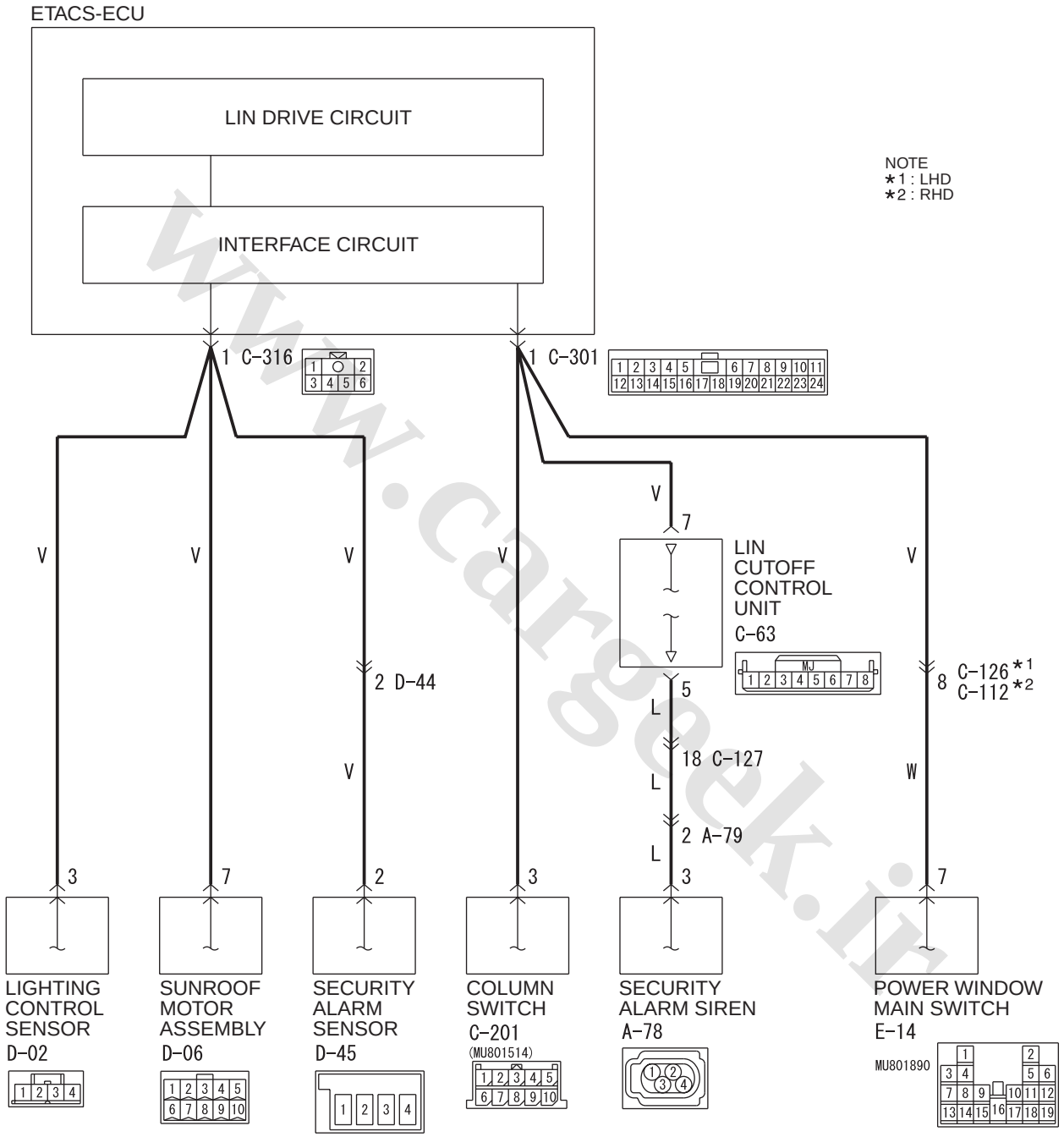

Wire colour code
B : Black LG : Light green G : Green L : Blue W : White Y : Yellow SB : Sky blue
BR : Brown O : Orange GR : Grey R : Red P : Pink V : Violet PU : Purple SI : Silver

WDH54E004A

www.cargeek.ir

www.CarGeek.ir

Connector: A-78

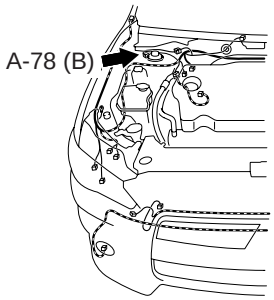

ACA00897AB

Connectors: C-301, C-316 <LHD>

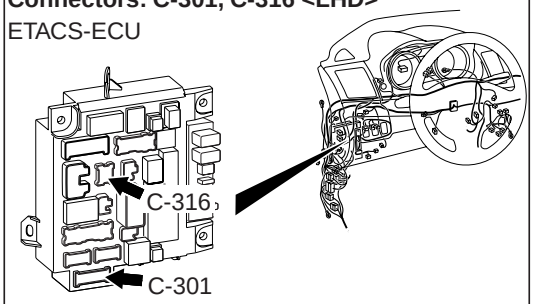

ACA00886AG

Connector: C-63 <LHD>

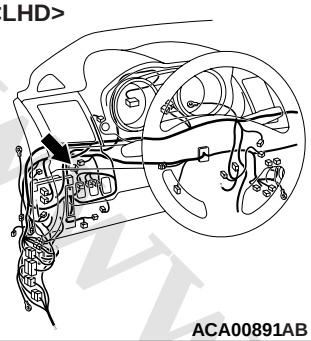

ACA00891AB

Connector: C-301, C-316 <RHD>

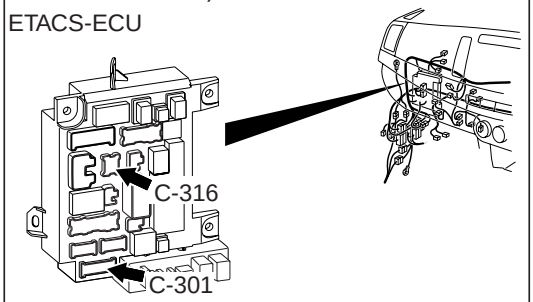

ACA00887AG

Connector: C-63 <RHD>

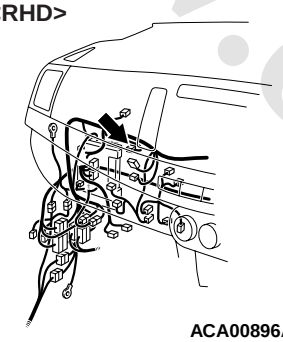

ACA00896AB

Connectors: D-02, D-06, D-45

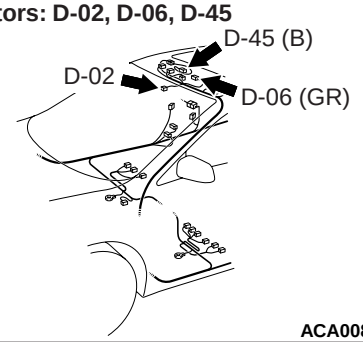

ACA00898AC

Connector: C-201 <LHD>

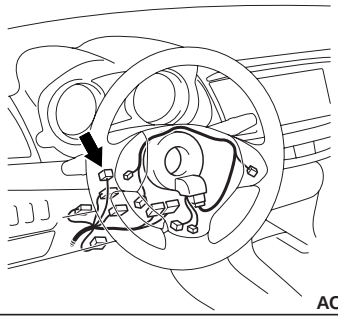

AC612708AT

Connector: E-14 <LHD>

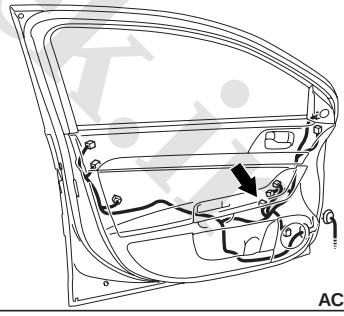

AC612730AH

Connector: C-201 <RHD>

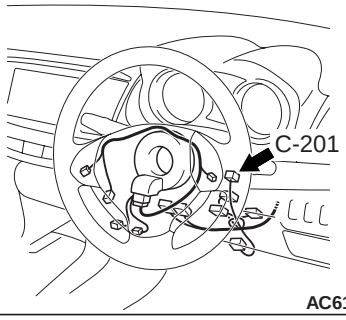

AC612716AK

Connector:E-14 <RHD>

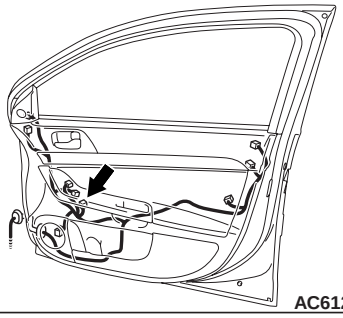

AC612735AF

www.cargeek.ir

www.CarGeek.ir

TROUBLE JUDGEMENT

The ETACS-ECU will set diagnosis code No. U1515 when no communication has been carried out for more than a certain period after the slave task received last valid data.

PROBABLE CAUSES

- Malfunction of the ETACS-ECU
- Malfunction of the slave ECU
- LIN bus lines shorted to power supply
- LIN bus lines shorted to earth

DIAGNOSIS PROCEDURE

STEP 1. Check the following connectors.

Check the following connectors:

- C-301 and C-316 <vehicles with sunroof> ETACS-ECU connectors
- C-201 Column switch connector
- E-14 Power window main switch connector
- D-06 Sunroof motor assembly connector <vehicles with sunroof>
- D-02 Lighting control sensor connector <vehicles with auto lamp>
- D-45 Security alarm sensor connector <vehicles with security alarm sensor>
- A-78 Security alarm siren connector <vehicles with security alarm sensor>
- C-63 LIN cutoff control unit connector <vehicles with security alarm sensor>

Q: Are all the connectors in good condition?

YES : Go to Step 2.
NO : Repair the defective connector.

STEP 2. LIN cutoff control unit check

Check the LIN cutoff control unit. Refer to GROUP 54A – Security Alarm System .

Q: Is the check result normal?

YES : Go to Step 3.
NO : Replace the LIN cutoff control unit.

STEP 3. Measure the voltage at the LIN bus lines.

Check the LIN bus lines for short to power supply.

(1) Disconnect all the ECU connectors which are connected to the LIN bus lines.
(2) Turn the ignition switch from "LOCK" (OFF) to "ON" position.
(3) Measure the voltage between C-201 column switch connector terminal No.3 and earth.
  - The voltmeter needle does not swing.

  NOTE: If the LIN bus lines are short to power supply, the voltmeter indicates a constant value.
(4) Measure the resistance value between E-14 power window main switch connector terminal No.X and earth.
  - No continuity (1 kΩ or more)
(5) Measure the voltage between D-06 sunroof motor assembly connector terminal No.7 and earth. <vehicles with sunroof>
  - The voltmeter needle does not swing.

  NOTE: If the LIN bus lines are short to power supply, the voltmeter indicates a constant value.
(6) Measure the voltage between D-02 lighting control sensor connector terminal No.3 and earth. <vehicles with auto lamp>
  - The voltmeter needle does not swing.

  NOTE: If the LIN bus lines are short to power supply, the voltmeter indicates a constant value.
(7) Measure the voltage between D-45 security alarm sensor connector terminal No.3 and earth. <vehicles with security alarm sensor>
  - The voltmeter needle does not swing.

  NOTE: If the LIN bus lines are short to power supply, the voltmeter indicates a constant value.
(8) Measure the voltage between A-78 security alarm siren connector terminal No.3 and earth. <vehicles with security alarm sensor>
  - The voltmeter needle does not swing.

  NOTE: If the LIN bus lines are short to power supply, the voltmeter indicates a constant value.

Q: Is the check result normal?

YES : Go to Step 4.
NO : Repair the wiring harness.

STEP 4. Measure the resistance at the LIN bus lines.

Check the LIN bus lines for short to earth.

(1) Disconnect all the ECU connectors which are connected to the LIN bus lines.
(2) Measure the resistance value between C-201 column switch connector terminal No.3 and earth.
  - No continuity (1 kΩ or more)
(3) Measure the resistance value between D-06 sunroof motor assembly connector terminal No.7 and earth. <vehicles with sunroof>
  - No continuity (1 kΩ or more)
(4) Measure the resistance value between D-02 lighting control sensor connector terminal No.3 and earth. <vehicles with auto lamp>
  - No continuity (1 kΩ or more)
(5) Measure the resistance value between D-45 security alarm sensor connector terminal No.3 and earth. <vehicles with security alarm sensor>
  - No continuity (1 kΩ or more)
(6) Measure the resistance value between A-78

www.cargeek.ir

www.CarGeek.ir

security alarm siren connector terminal No.3 and earth. <vehicles with security alarm sensor>
- No continuity (1 kΩ or more)

Q: Is the check result normal?
YES : Go to Step 5.
NO : Repair the wiring harness.

STEP 5. Check the column switch.
Disconnect C-201 column switch connector, and recheck whether diagnosis code No. U1515 is set.
(1) Connect all the relevant ECUs, and disconnect C-201 column switch connector only.
(2) Erase the diagnosis code.
(3) Turn the ignition switch from "LOCK" (OFF) to "ON" position.
(4) Check whether diagnosis code No. U1515 is set.
NOTE: If diagnosis code No. U1515 is not set, diagnosis code No. U1109 is set because the column switch is disconnected. This is normal.
(5) Turn the ignition switch to the "LOCK" (OFF) position.

Q: Is diagnosis code No. U1515 set?
YES : Reconnect the column switch connector, and go to Step 6.
NO : Replace the lighting switch.

STEP 6. Check the power window main switch.
Disconnect E-14 power window main switch connector, and recheck whether diagnosis code No. U1515 is set.
(1) Connect all the relevant ECUs, and disconnect E-14 power window main switch connector only.
(2) Erase the diagnosis code.
(3) Turn the ignition switch from "LOCK" (OFF) to "ON" position.
(4) Check whether diagnosis code No. U1515 is set.
NOTE: If diagnosis code No. U1515 is not set, diagnosis code No. U0215 is set because the power window main switch is disconnected. This is normal.
(5) Turn the ignition switch to the "LOCK" (OFF) position.

Q: Is diagnosis code No. U1515 set?
YES : Reconnect the power window main switch connector, and go to Step 7.
NO : Replace the power window main switch.

STEP 7. Check the sunroof motor assembly.
Disconnect D-06 sunroof motor assembly connector, and recheck whether diagnosis code No. U1515 is set.
(1) Connect all the relevant ECUs, and disconnect D-06 sunroof motor assembly connector only.
(2) Erase the diagnosis code.
(3) Turn the ignition switch from "LOCK" (OFF) to "ON" position.
(4) Check whether diagnosis code No. U1515 is set.
NOTE: If diagnosis code No. U1515 is not set, diagnosis code No. U0169 is set because the sunroof motor assembly is disconnected. This is normal.
(5) Turn the ignition switch to the "LOCK" (OFF) position.

Q: Is diagnosis code No. U1515 set?
YES : Reconnect the sunroof motor assembly connector, and go to Step 8.
NO : Replace the sunroof motor assembly.

STEP 8. Check the lighting control sensor.
Disconnect D-02 lighting control sensor connector, and recheck whether diagnosis code No. U1515 is set.
(1) Connect all the relevant ECUs, and disconnect D-02 lighting control sensor connector only.
(2) Erase the diagnosis code.
(3) Turn the ignition switch from "LOCK" (OFF) to "ON" position.
(4) Check whether diagnosis code No. U1515 is set.
NOTE: If diagnosis code No. U1515 is not set, diagnosis code No. U0231 is set because the sunroof motor assembly is disconnected. This is normal.
(5) Turn the ignition switch to the "LOCK" (OFF) position.

Q: Is diagnosis code No. U1515 set?
YES : Reconnect the lighting control sensor, and go to Step 9.
NO : Replace the lighting control sensor.

STEP 9. Check the security alarm sensor.
Disconnect D-45 security alarm sensor connector, and recheck whether diagnosis code No. U1515 is set.
(1) Connect all the relevant ECUs, and disconnect D-45 security alarm sensor connector only.
(2) Erase the diagnosis code.
(3) Turn the ignition switch from "LOCK" (OFF) to "ON" position.
(4) Check whether diagnosis code No. U1515 is set.
NOTE: If diagnosis code No. U1515 is not set, diagnosis code No. U1007 is set because the security alarm sensor is disconnected. This is normal.
(5) Turn the ignition switch to the "LOCK" (OFF)

www.cargeek.ir

www.CarGeek.ir

position.

Q: Is diagnosis code No. U1515 set?
YES : Reconnect the security alarm sensor connector, and go to Step 10.
NO : Replace the security alarm sensor.

STEP 10. Check the security alarm siren.
Disconnect A-78 security alarm siren connector, and recheck whether diagnosis code No. U1515 is set.
(1) Connect all the relevant ECUs, and disconnect A-78 security alarm siren connector only.
(2) Erase the diagnosis code.
(3) Turn the ignition switch from "LOCK" (OFF) to "ON" position.
(4) Check whether diagnosis code No. U1515 is set.
NOTE: If diagnosis code No. U1515 is not set, diagnosis code No. U1006 is set because the security alarm siren is disconnected. This is normal.
(5) Turn the ignition switch to the "LOCK" (OFF) position.

Q: Is diagnosis code No. U1515 set?
YES : Reconnect the security alarm siren connector, and go to Step 11.
NO : Replace the security alarm siren.

STEP 11. Recheck for diagnosis code.
Check again if the diagnosis code is set to the ETACS-ECU.
(1) Erase the diagnosis code.
(2) Turn the ignition switch from "LOCK" (OFF) to "ON" position.
(3) Check whether diagnosis code No. U1515 is set.
(4) Turn the ignition switch to the "LOCK" (OFF) position.

Q: Is the diagnosis code set?
YES : Replace the ETACS-ECU.
NO : The trouble can be an intermittent malfunction (Refer to GROUP 00 – How to Cope with Intermittent Malfunction).

Code No.U1539 Security alarm siren LIN checksum error <Vehicles with security alarm sensor>

JUDGMENT CRITERIA
The ETACS-ECU will set diagnosis code No. U1539 when abnormal signals are received from the security alarm siren.

PROBABLE CAUSES
- Faulty security alarm siren

DIAGNOSIS PROCEDURE

Check whether the diagnosis code is reset.
Check again if the diagnosis code is set to the ETACS-ECU.
(1) Erase the diagnosis code.
(2) Turn the ignition switch from "LOCK" (OFF) position to "ON" position.
(3) Check if diagnosis code is set.

Q: Is the diagnosis code set?
YES : Replace the security alarm siren.
NO : A poor connection, open circuit, or other intermittent malfunctions in the LIN bus lines between the security alarm siren and the ETACS-ECU (Refer to GROUP 00 – How to Cope with Intermittent Malfunction).

Code No.U1540 Security alarm SNSR.LIN checksum error <Vehicles with security alarm sensor>

JUDGMENT CRITERIA
The ETACS-ECU will set diagnosis code No. U1540 when abnormal signals are received from the security alarm sensor.

PROBABLE CAUSES
- Faulty security alarm sensor

DIAGNOSIS PROCEDURE

Check whether the diagnosis code is reset.
Check again if the diagnosis code is set to the ETACS-ECU.
(1) Erase the diagnosis code.
(2) Turn the ignition switch from "LOCK" (OFF) position to "ON" position.
(3) Check if diagnosis code is set.

www.cargeek.ir

www.CarGeek.ir

Q: Is the diagnosis code set?

YES : Replace the security alarm sensor.

NO : A poor connection, open circuit, or other intermittent malfunctions in the LIN bus lines between the security alarm sensor and the ETACS-ECU (Refer to GROUP 00 – How to Cope with Intermittent Malfunction).

www.cargeek.ir

www.cargeek.ir

www.CarGeek.ir

GROUP 54C

CONTROLLER AREA NETWORK (CAN)

CONTENTS

GENERAL INFORMATION 54C-2

SPECIAL TOOL(S) 54C-5

TEST EQUIPMENT 54C-7

SERVICE PRECAUTIONS. 54C-8

PRECAUTIONS ON HOW TO REPAIR THE CAN BUS LINES 54C-9

EXPLANATION ABOUT THE M.U.T.-III CAN BUS DIAGNOSTICS 54C-9

TROUBLESHOOTING 54C-15

- CAN BUS DIAGNOSIS CHART 54C-15
- CAN-RELATED CONNECTOR POSITION 54C-21
- CAN BUS DIAGNOSIS 54C-24
- DIAGNOSIS ITEM 1 . . . . . 54C-24
- DIAGNOSIS ITEM 2 . . . . . 54C-26
- DIAGNOSIS ITEM 3 . . . . . 54C-27
- DIAGNOSIS ITEM 4 . . . . . 54C-37
- DIAGNOSIS ITEM 5 . . . . . 54C-47
- DIAGNOSIS ITEM 6 . . . . . 54C-57
- DIAGNOSIS ITEM 7 . . . . . 54C-60
- DIAGNOSIS ITEM 8 . . . . . 54C-63
- DIAGNOSIS ITEM 9 . . . . . 54C-67
- DIAGNOSIS ITEM 10 . . . . . 54C-70
- DIAGNOSIS ITEM 11 . . . . . 54C-73
- DIAGNOSIS ITEM 12 . . . . . 54C-76
- DIAGNOSIS ITEM 13 . . . . . 54C-79
- DIAGNOSIS ITEM 14 . . . . . 54C-83
- DIAGNOSIS ITEM 15 . . . . . 54C-86
- DIAGNOSIS ITEM 16 . . . . . 54C-89
- DIAGNOSIS ITEM 17 . . . . . 54C-92
- DIAGNOSIS ITEM 18 . . . . . 54C-95
- DIAGNOSIS ITEM 19 . . . . . 54C-99
- DIAGNOSIS ITEM 20 . . . . . 54C-102
- DIAGNOSIS ITEM 21 . . . . . 54C-105
- DIAGNOSIS ITEM 22 . . . . . 54C-108
- DIAGNOSIS ITEM 23 . . . . . 54C-111
- DIAGNOSIS ITEM 24 . . . . . 54C-122
- DIAGNOSIS ITEM 25 . . . . . 54C-125

CAN COMMUNICATION-RELATED DIAGNOSIS CODE TABLE 54C-141

www.cargeek.ir

www.CarGeek.ir

GENERAL INFORMATION

M1548310001895

CAN, an abbreviation for Controller Area Network, is an ISO-certified international standard for a serial multiplex communication protocol[*1]. A communication circuit employing the CAN protocol connects each ECU, and sensor data can be shared among, which enables more reduction in wiring.

*NOTE: [*1]: The regulations have been decided in detail, from software matters such as the necessary transmission rate for communication, the system, data format, and communication timing control method to hardware matters such as the harness type and length and the resistance values.*

CAN offers the following advantages.

- Transmission rates are much faster than those in conventional communication (up to 1 Mbps), allowing much more data to be sent.
- It is exceptionally immune to noise, and the data obtained from each error detection device is more reliable.
- Each ECU connected via the CAN communicates independently, therefore if the ECU enters damaged mode, communications can be continued in some cases.

www.cargeek.ir

www.cargeek.ir

www.CarGeek.ir

STRUCTURE

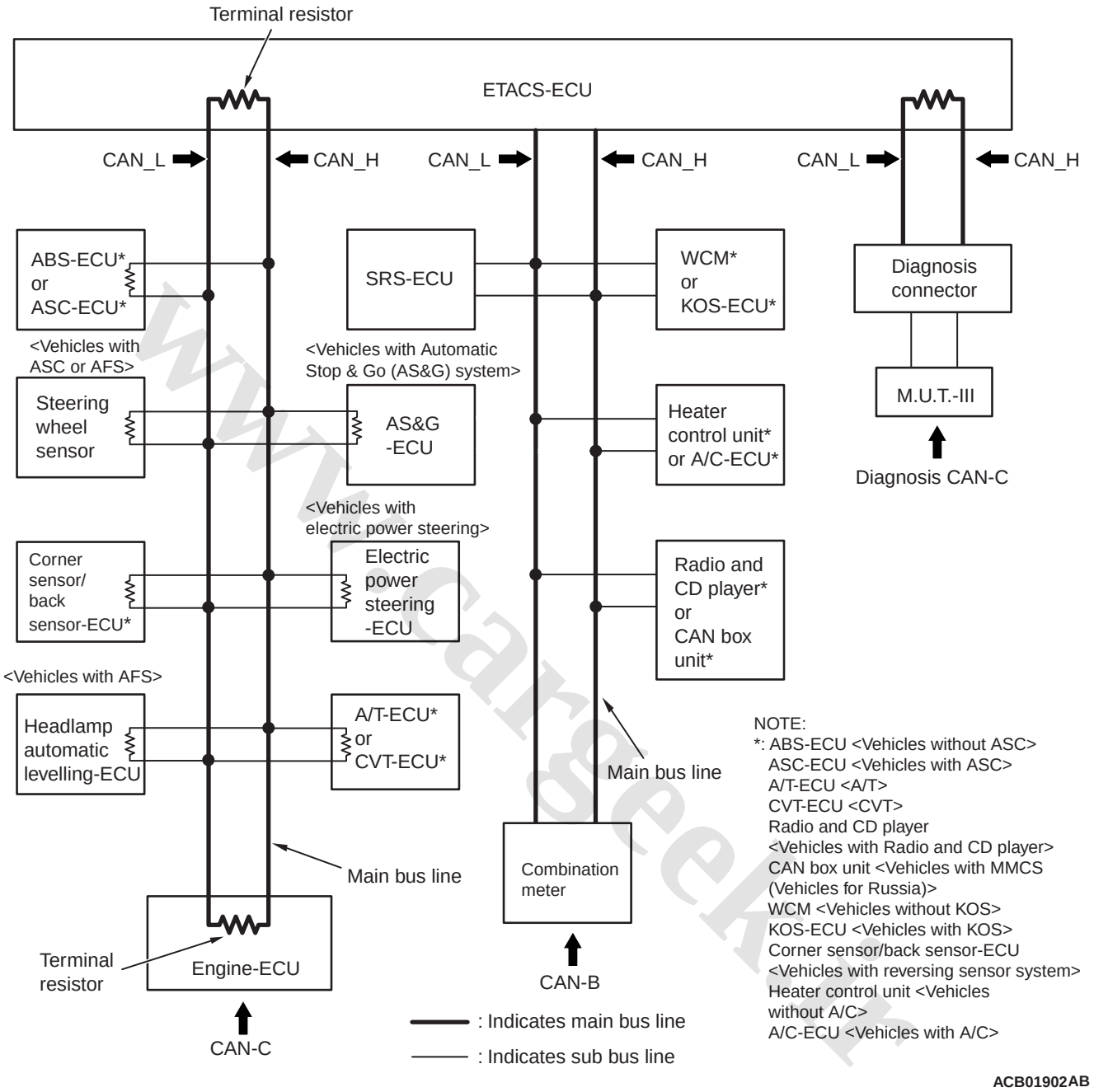

- A gateway function has been integrated to ETACS-ECU as the network central ECU.
- The CAN system consists of the following three networks: CAN-B (middle-speed body network), CAN-C (high-speed power train network), and the diagnosis CAN-C (diagnosis exclusive network). Each ECU is connected to one of the networks depending on its functions.
- The CAN bus line consists of two lines, CAN_L and CAN_H (CAN Low and CAN High, respectively), as well as two terminal resistors (A twisted-pair cable, highly resistant to noise, is used for the communications line).
- The CAN bus line connecting two dominant ECUs is the main bus line, and the CAN bus line connecting each ECU is the sub-bus line.
- With CAN-C, the terminal resistors are incorporated in ECU. Resistors with approximately 120 Ω is used for the dominant ECU, and that with 3.0 kΩ is used for the non-dominant ECU.

www.cargeek.ir

www.CarGeek.ir

NOTE:
- *Dominant ECU: ETACS-ECU and engine ECU*
- *Non-dominant ECU: ECU and sensor on CAN-C network, excluding ETACS-ECU and engine ECU*

- To the CAN bus line, ECU, sensor, and diagnosis connector are connected as follows for each network.

CAN-B
- WCM <vehicles without KOS> or KOS-ECU <vehicles with KOS>
- SRS-ECU
- Heater control unit <vehicles without A/C>
- A/C-ECU <vehicles with A/C>
- Radio and CD player <vehicles with Radio and CD player> or CAN box unit <vehicles with MMCS (vehicles for Russia)>
- Combination meter

CAN-C
- Headlamp automatic levelling-ECU <vehicles with AFS>
- Steering wheel sensor <vehicles with ASC or AFS>
- AS&G-ECU <vehicles with automatic stop & go (AS&G) system>
- ABS-ECU <vehicles without ASC> or ASC-ECU <vehicles with ASC>
- A/T-ECU <A/T> or CVT-ECU <CVT>
- Electric power steering-ECU <vehicles with Electric power steering>
- Engine-ECU
- Corner sensor/back sensor-ECU <vehicles with reversing sensor system>

Diagnosis CAN-C
- Diagnosis connector

www.cargeek.ir

www.CarGeek.ir

SPECIAL TOOLS

M1548304200972

www.cargeek.ir

www.cargeek.ir

www.CarGeek.ir

Tool	Number	Name	Use
a 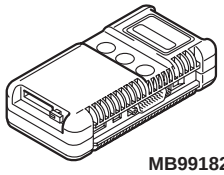 MB991824 b 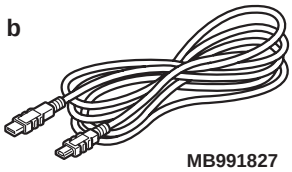 MB991827 c 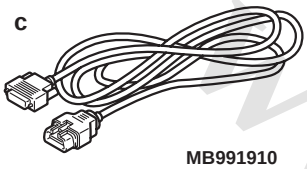 MB991910 d 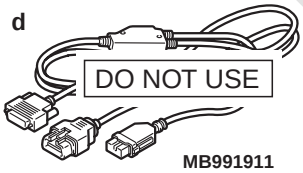 DO NOT USE MB991911 e 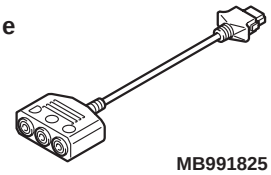 MB991825 f 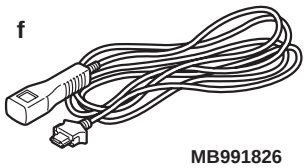 MB991826 MB991955	MB991955 a. MB991824 b. MB991827 c. MB991910 d. MB991911 e. MB991825 f. MB991826	M.U.T.-III sub-assembly a. Vehicle Communication Interface (V.C.I.) b. M.U.T.-III USB cable c. M.U.T.-III main harness A (Vehicles with CAN communication system) d. M.U.T.-III main harness B (Vehicles without CAN communication system) e. M.U.T.-III measure adapter f. M.U.T.-III trigger harness	⚠ CAUTION **For vehicles with CAN communication, use M.U.T.-III main harness A to send simulated vehicle speed. If you connect M.U.T.-III main harness B instead, the CAN communication does not function correctly.** CAN bus diagnostics
a 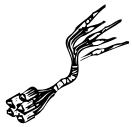 b 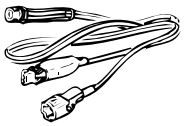 c 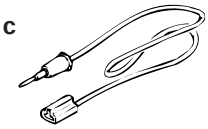 d DO NOT USE MB991223	MB991223 a. MB991219 b. MB991220 c. MB991221 d. MB991222	Harness set a. Check harness b. LED harness c. LED harness adapter d. Probe	Continuity check and voltage measurement at harness wire or connector a. For checking connector pin contact pressure b. For checking power supply circuit c. For checking power supply circuit d. For connecting a locally sourced tester

www.cargeek.ir

www.CarGeek.ir

Tool	Number	Name	Use
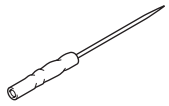 MB992006	MB992006	Extra fine probe	Continuity check and voltage measurement at harness wire or connector
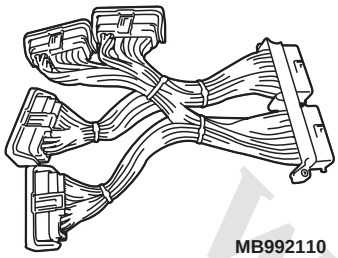 MB992110	MB992110	Power plant ECU check harness	Checking continuity and measuring voltage at engine-ECU <Petrol> harness-side connector
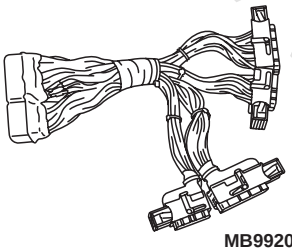 MB992044	MB992044	Power plant ECU check harness	Checking continuity and measuring voltage at engine-ECU <Diesel> harness-side connector
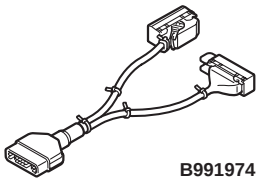 B991974	MB991974	ABS check harness	Checking continuity and measuring voltage at ABS-ECU harness-side connector
MB991997	MB991997	ASC check harness	Checking continuity and measuring voltage at ASC-ECU harness-side connector

TEST EQUIPMENT

M1548304300333

Test equipment	Name	Use
AC000019	Digital multimeter	Checking CAN bus circuit (for resistance and voltage measurements)

www.cargeek.ir

www.CarGeek.ir

SERVICE PRECAUTIONS

M1548302100333

Warnings in diagnosis section	Details regarding warning
⚠ CAUTION When servicing an CAN bus line, earth yourself by touching a metal object such as an unpainted water pipe. If you fail to do, a component connected to the CAN bus line may be broken.	–
⚠ CAUTION A digital multimeter should be used.	When measuring resistance value or voltage in CAN bus lines, use a digital multimeter. If not using a digital multimeter, the equipments, which are connected through the CAN communication lines, may be damaged.
⚠ CAUTION When measuring the resistance, disconnect the negative battery terminal.	Disconnect the negative battery terminal when measuring the resistance value in the CAN bus line. If you fail to do so, the equipments, which are connected through the CAN communication lines, may be damaged.
⚠ CAUTION The test wiring harness should be used.	Always use the test harness when measuring the voltage or resistance value at the female connector. If you fail to do so, connectors may be damaged.
⚠ CAUTION The strand end of the twist wire should be within 10 cm from the connector.	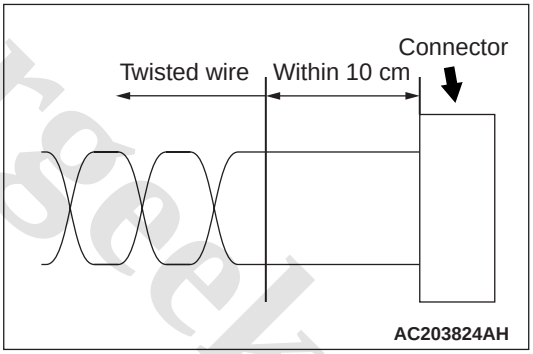 If you repair the wire due to a defective connector or its terminal or harness wire, you should cut the wire so that the strand end of the twist wire should be within 10 cm from the connector as shown. If it exceeds 10 cm, twist the wiring harness just like the original twisted wire. If the strand end exceeds 10 cm, a communication error may be caused.
⚠ CAUTION Strictly observe the specified wiring harness repair procedure.	When you repair a CAN bus line, observe the precautions on how to repair the CAN bus line strictly. Refer to . If a new wire is added or a splice point is modified for the CAN_L or CAN_H line, an error in the CAN communication may be caused.

www.cargeek.ir

www.CarGeek.ir

PRECAUTIONS ON HOW TO REPAIR THE CAN BUS LINES

M1548301900358

PRECAUTIONS ON HOW TO REPAIR THE CAN BUS LINES

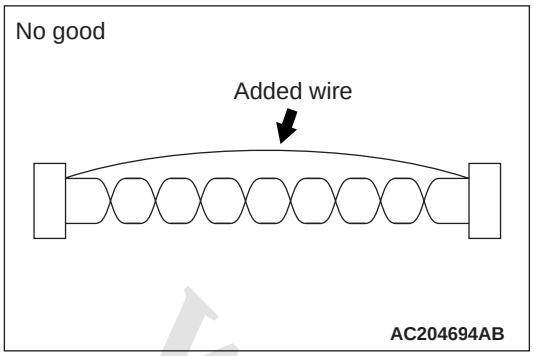

- If the CAN bus line(s) are repaired, renew all the twisted wires between the end connectors. If the wiring harness is partially repaired, or only CAN_L or CAN_H line is repaired, noise suppression is deteriorated, causing a communication error.

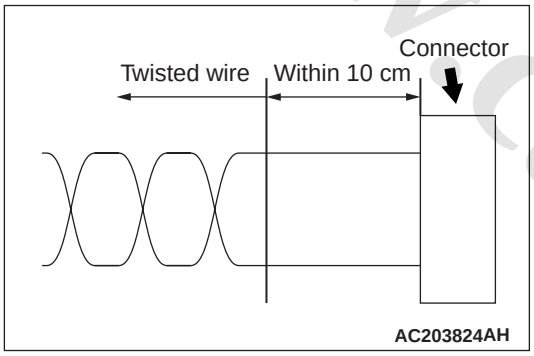

- If the connector or wire on the main bus line or the sub-bus wire is replaced, the frayed end of the twisted wire should be within 10 cm from the connector. If it exceeds 10 cm, twist the wiring harness just like the original twisted wire. If the frayed end exceeds 10 cm, noise suppression is deteriorated, causing a communication error.

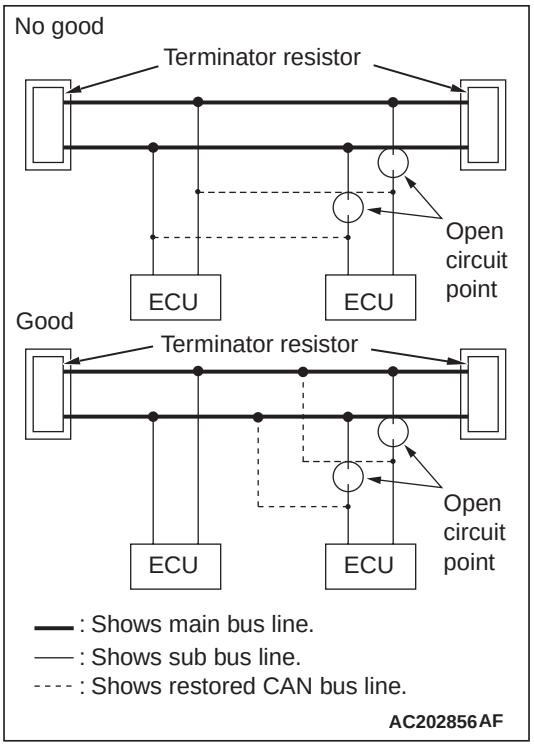

- If a sub-bus line is repaired, splice a new wire directly into the main bus line. If a new wire is spliced into the sub-bus line, which is connected to another device, the CAN communication will be disabled.

PRECAUTIONS ON HOW TO REPAIR THE TERMINATOR RESISTOR

If one-side terminator resistor is broken, the CAN communication will continue although noise suppression is deteriorated. No diagnosis codes may be set even if the terminator resistor was broken. If a damage is found, replace the ECU which incorporates the defective terminator resistor.

CAN BUS LINE REPAIR HARNESS (PART NAME AND NUMBER)

Part name	Part number
Twist pair cable	MN151514

EXPLANATION ABOUT THE M.U.T.-III CAN BUS DIAGNOSTICS

M1548300100564

The M.U.T.-III CAN bus diagnostics carries out the three checks below automatically, and then displays current condition of the CAN bus lines according to the check results.

www.cargeek.ir

www.CarGeek.ir

CAN BUS LINE DIAGNOSTIC FLOW

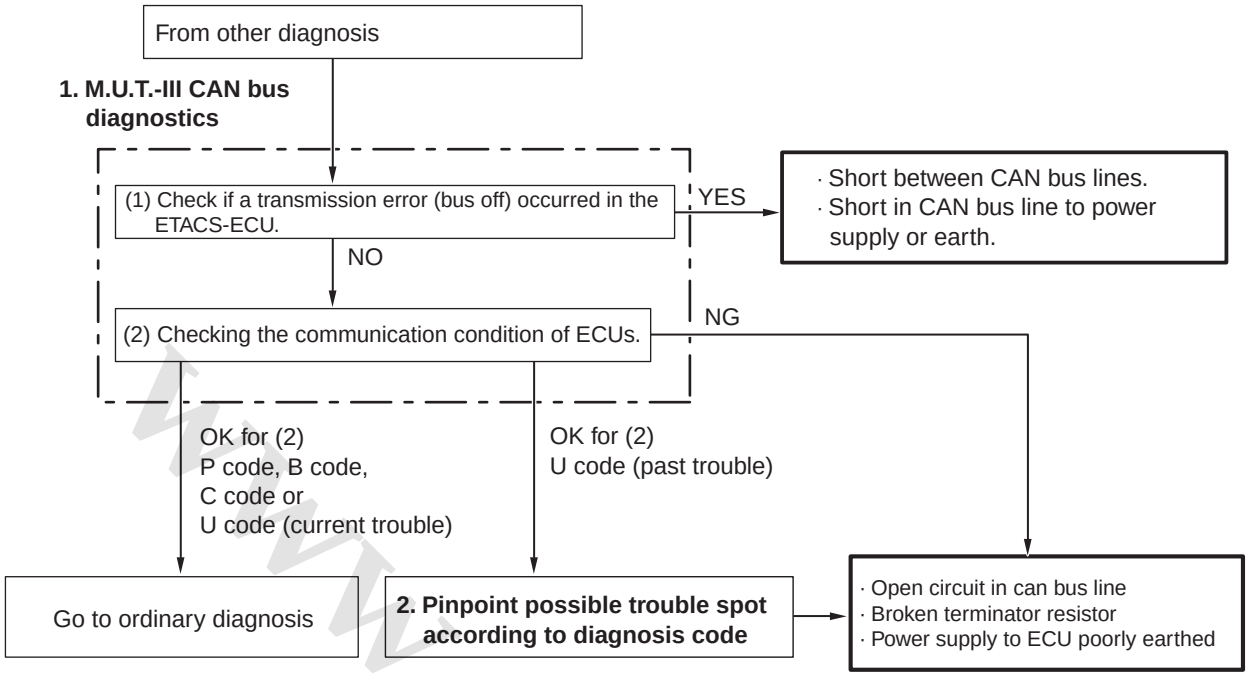

AC507612AL

1. M.U.T.-III CAN bus diagnostics

   The M.U.T.-III diagnoses CAN bus lines in accordance with the following strategy.

   NOTE: After you determine whether the CAN-C lines are in good condition, then determine whether the CAN-B lines are in good condition. Then confirm each judgement result on the M.U.T.-III screen.

   (1) Check that the ETACS-ECU sets a diagnosis code.
   You can narrow down the points to be diagnosed by confirming an ETACS-ECU diagnosis code.

   (2) Checking the communication condition of ECUs
   The M.U.T.-III narrows down troubles in circuit by itself. Its strategies are as follows.

www.cargeek.ir

www.cargeek.ir

www.CarGeek.ir

Reference circuit

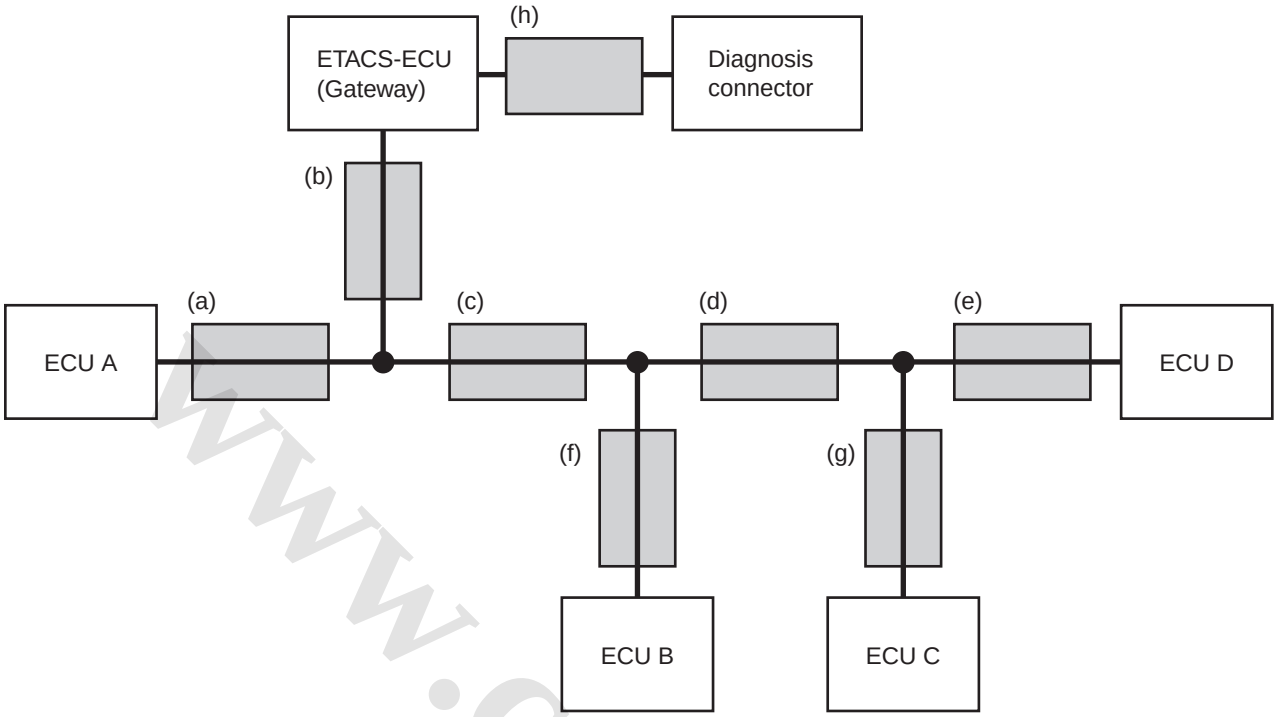

AC204741AD

www.cargeek.ir

www.cargeek.ir

www.CarGeek.ir

ECU which cannot communicate with the M.U.T.-III	Possible trouble spot	Logic for narrowing down trouble spot	
ETACS-ECU and all ECUs	CAN bus line (h) and power supply system to ETACS-ECU	The ETACS-ECU and the other ECUs use the CAN bus line (h) when they communicate with the M.U.T.-III. Since none of the ETACS-ECU and the other ECUs can communicate with the M.U.T.-III, CAN bus line (h) or the power supply circuit to the ETACS-ECU may be faulty.	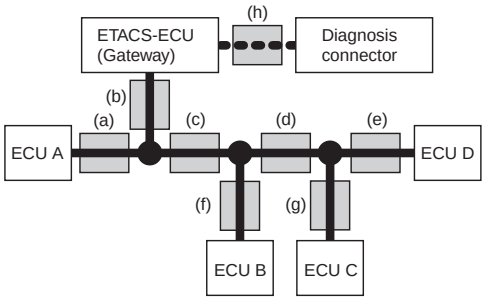 AC204742BO
ECU A	CAN bus line (a) and power supply system to ECU A	ECU A communicates with the M.U.T.-III via CAN bus lines (a) and (b). The M.U.T.-III judges that CAN bus line (b) is normal, because it can communicate with other ECUs. Possible trouble may be present in CAN bus line (a) or the power supply system to ECU A.	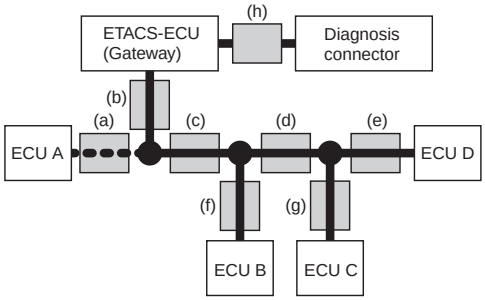 AC204742BH
ECU C	CAN bus line (g) and power supply system to ECU C	ECU C communicates with the M.U.T.-III via CAN bus lines (b), (c), (d) and (g). The M.U.T.-III judges that CAN bus lines (b), (c) and (d) are normal, because it can communicate with ECUs B and D. Possible trouble may be present in CAN bus line (g) or the power supply system to ECU C.	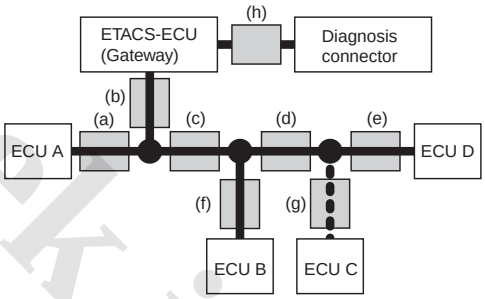 AC204742BI

www.cargeek.ir

www.CarGeek.ir

ECU which cannot communicate with the M.U.T.-III	Possible trouble spot	Logic for narrowing down trouble spot	
ECU C and ECU D	Trouble in CAN bus line (d)	ECUs C and D communicate with the M.U.T.-III via CAN bus lines (b), (c), (d), (e) and (g). The M.U.T.-III judges that CAN bus lines (b) and (c) are normal, because it can communicate with ECU B. Possible trouble may be present in CAN bus line (d), (e) or (g) or the power supply system to ECU D or C. CAN bus line (d) is shared by ECUs C and D when they communicate with the M.U.T.-III, so CAN bus line (d) is suspected as ultimate cause. CAN bus line (g) or (e) and power supply systems to ECU C or D are also suspected as second cause.	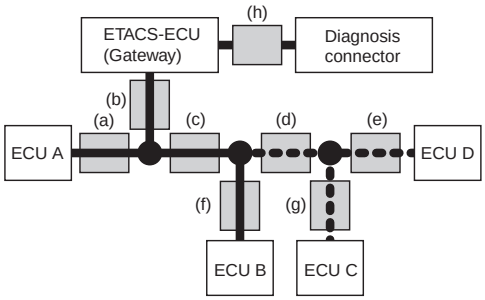 AC204742BJ
ECU B and ECU D	CAN bus line (e) or (f) or power supply system to ECU B or D	ECUs B and D communicate with the M.U.T.-III via CAN bus lines (b), (c), (d), (e) and (f). The M.U.T.-III judges that CAN bus lines (b), (c) and (d) are normal, because it can communicate with ECU C. Possible trouble may be present in CAN bus line (f) or (e) or the power supply system to ECU B or D.	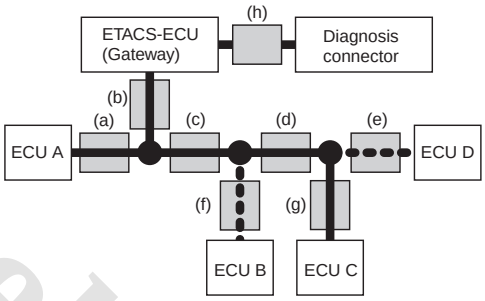 AC204742BK
All ECU (except ETACS-ECU)	CAN bus line (b)	The other ECUs except the ETACS-ECU use CAN bus lines (b) and (h) when they communicate with the M.U.T.-III. It must be assumed that CAN bus line (b) is defective since the ETACS-ECU can communicate with the M.U.T.-III.	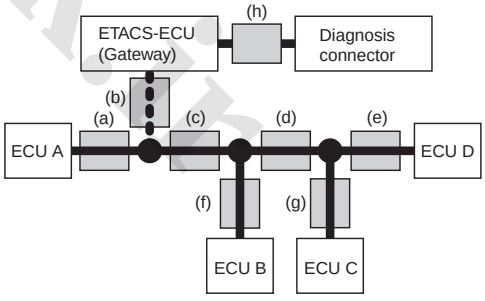 AC204742BP

2. Pinpoint possible trouble spot according to diagnosis code

   If diagnosis code related to CAN communication is set as past trouble, isolate opens as described below.

NOTE: If you pinpoint trouble spot according to diagnosis code, you should use time-out diagnosis code. diagnosis code related to failure information is set when the data to be set contains an error, so CAN bus line itself is probably normal.

www.cargeek.ir

www.CarGeek.ir

NOTE: Time-out diagnosis code codes are stored in each ECU memory individually. Therefore, it is possible that these diagnosis code codes have not been set simultaneously. If the trouble spot cannot be found when you diagnose by judging from multiple diagnosis code codes, check the communication lines between each ECU.

Diagnosis code to be set	Possible trouble spot	Logic for narrowing down trouble spot	
Time-out diagnosis code associated with ECU D is stored in ECU A, ECU B and ECU C. Time-out diagnosis codes associated with ECUs A, B and C are stored in ECU D. "Bus off" diagnosis code is stored in ECU D.	Trouble in CAN bus line (e) and power supply system to ECU D	When time-out diagnosis code associated with ECU D is stored in ECU A, B and C, or time-out diagnosis codes associated with ECUs A, B and C are stored in ECU D, or "bus off" diagnosis code is stored in ECU D, CAN bus line (e) is suspected. When diagnosis code is not stored in ECU D, the power supply to ECU D is suspected.	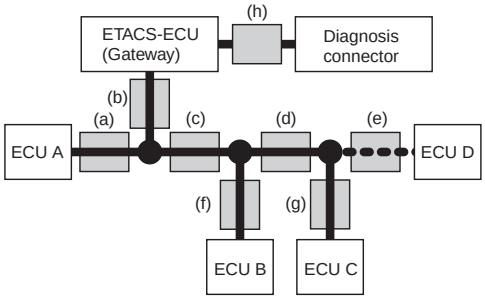 AC204742BL
Time-out diagnosis code associated with ECU A is stored in ECUs B, C and D. Time-out diagnosis codes associated with ECUs B, C and D are stored in ECU A. "Bus off" diagnosis code is stored in ECU A.	Trouble in CAN bus line (a) or (c) and power supply system to ECU A.	When time-out diagnosis code associated with ECU A is stored in ECUs B, C and D, or time-out diagnosis codes associated with ECUs B, C and D are stored in ECU A, or "bus off" diagnosis code is stored in ECU A, CAN bus line (a) or (c) is suspected. When diagnosis code is not stored in ECU A, the power supply to ECU A is suspected.	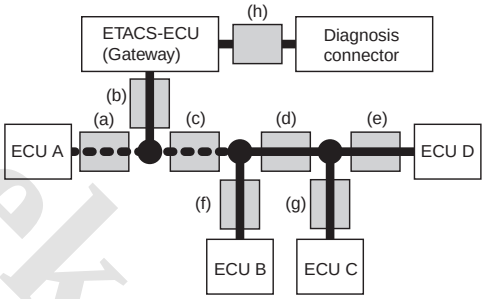 AC204742BM

www.cargeek.ir

www.CarGeek.ir

Diagnosis code to be set	Possible trouble spot	Logic for narrowing down trouble spot	
Time-out diagnosis codes associated with ECUs C and D are stored in ECU A and ECU B.	Trouble in CAN bus line (d)	If time-out diagnosis codes associated with ECUs C and D are stored in ECUs A and B, or time-out codes associated with ECUs A and B are stored in ECUs C and D, CAN bus line (d) is suspected. CAN bus line (g) or (e) and power supply systems to ECU C or D are also suspected as second cause.	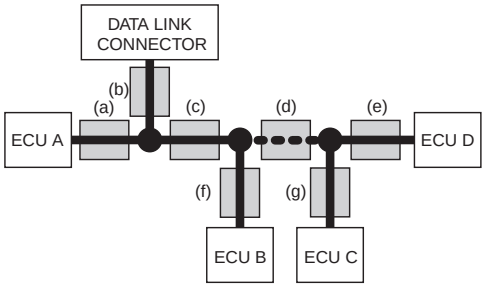 AC204742BR
Time-out diagnosis codes associated with ECUs A and B are stored in ECU C and ECU D.			
Time-out diagnosis codes associated with ECUs A, B, C and D are stored in ETACS-ECU.	Trouble in CAN bus line (b)	It must be assumed that a fault was present in CAN bus line (b) when the ETACS-ECU has set a time-out diagnosis code for ECU A, B, C and D.	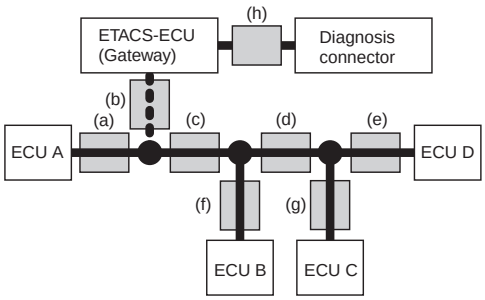 AC204742BP
Time-out diagnosis code associated with ETACS-ECU is stored in ECU A, B, C and ECU D.			

TROUBLESHOOTING

CAN BUS DIAGNOSTICS TABLE

M1548300202589

⚠ CAUTION

- **A diagnosis code may not also be set in the CAN-B lines under the conditions below. If no diagnosis code has been set due to electrical noise, confirm diagnosis item 25 .**
  - **Open circuit at the CAN_H side of the CAN-B bus lines**
  - **Open circuit at the CAN_L side of the CAN-B bus line**
  - **Short to earth at the CAN_H side of the CAN-B bus line**
- **During diagnosis, a diagnosis code associated with another system may be set when the ignition switch is turned on with connector(s) disconnected. After completing the repair, confirm all systems for diagnosis code(s). If diagnosis code(s) are set, erase them all.**

This diagnosis applies only to the CAN bus lines. If a different system is defective, proceed to the applicable diagnosis section for each system. Observe the diagnosis procedure below only when the CAN bus line is defective.

www.cargeek.ir

www.CarGeek.ir

M.U.T.-III screen (The ECUs that are not adopted are not displayed).	Comment	Diagnosis detail	Reference page
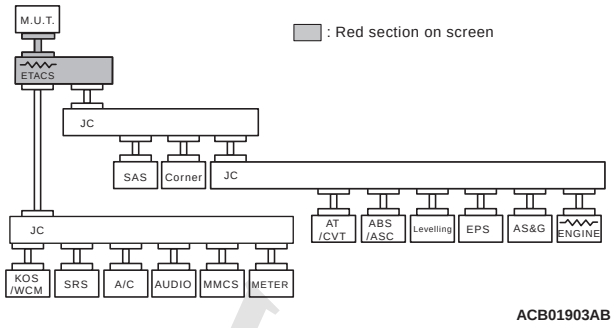	Trouble is suspected in the section displayed in red.	Diagnosis Item 1 Diagnose when the M.U.T.-III cannot receive the data sent by ETACS-ECU	
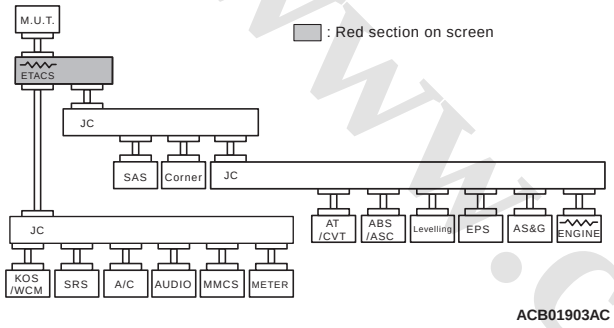	Trouble is suspected in the section displayed in red.	Diagnosis Item 2 Malfunction of the ETACS-ECU	
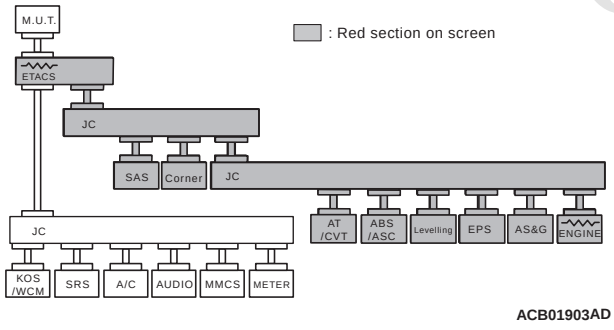	CAN-C: A bus-off failure is present in the gateway ECU.	Diagnosis Item 3 Abnormal short between the CAN-C bus lines	
	CAN-C: Earthing in red displayed area is estimated	Diagnosis Item 4 Diagnose shorts in the earth to CAN-C bus line	
	CAN-C: Short circuit to battery in red displayed area is estimated	Diagnosis Item 5 Diagnose shorts in the power supply to CAN-C bus line	
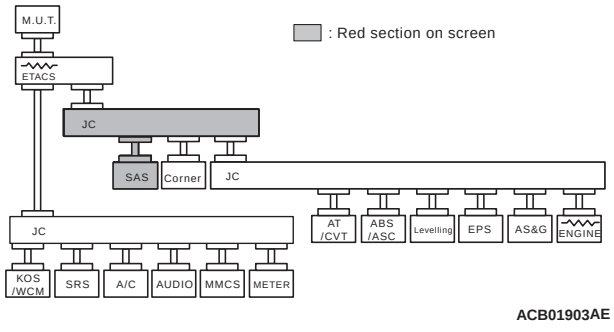	CAN-C: Disconnection in red displayed area is estimated.	Diagnosis Item 6 Diagnose when the M.U.T.-III cannot receive the data sent by steering wheel sensor <vehicles with ASC or AFS>	

www.cargeek.ir

www.CarGeek.ir

M.U.T.-III screen (The ECUs that are not adopted are not displayed).	Comment	Diagnosis detail	Reference page
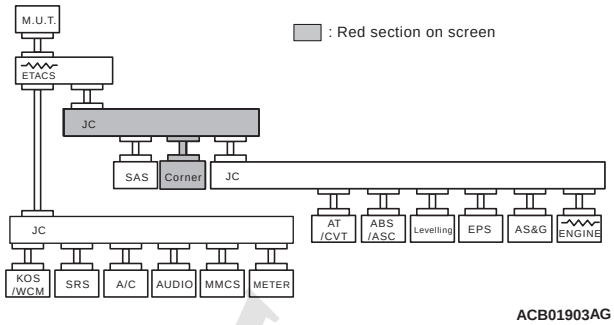	CAN-C: Disconnection in red displayed area is estimated.	Diagnosis Item 7 Diagnose when the M.U.T.-III cannot receive the data sent by corner sensor/back sensor-ECU <Vehicles with reversing sensor system>	
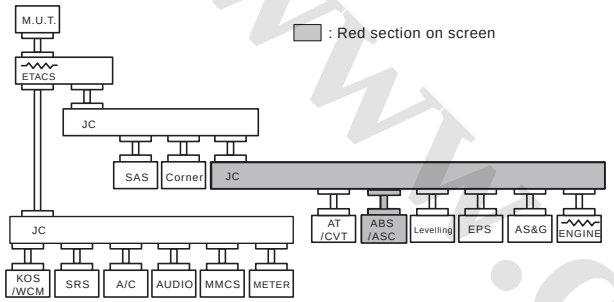	CAN-C: Disconnection in red displayed area is estimated.	Diagnosis Item 8 Diagnose when the M.U.T.-III cannot receive the data sent by ABS-ECU <vehicles without ASC> or ASC-ECU <vehicles with ASC>	
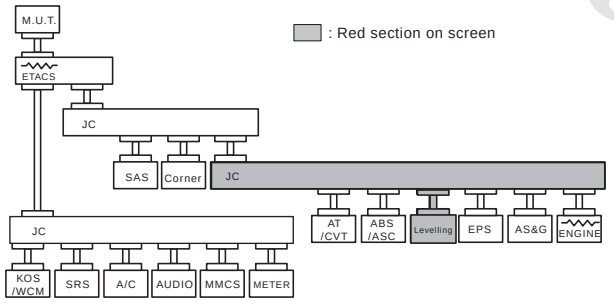	CAN-C: Disconnection in red displayed area is estimated.	Diagnosis Item 9 Diagnose when the M.U.T.-III cannot receive the data sent by headlamp automatic levelling-ECU <vehicles with AFS>	
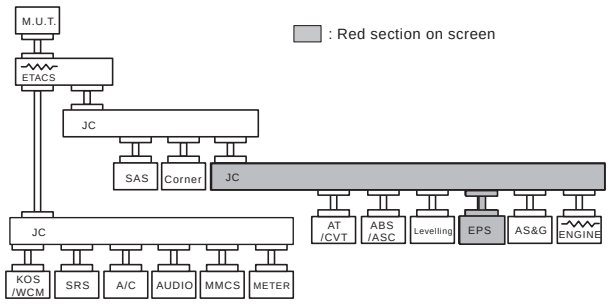	CAN-C: Disconnection in red displayed area is estimated.	Diagnosis Item 10 Diagnose when the M.U.T.-III cannot receive the data sent by electric power steering-ECU <vehicles with electric power steering)>	

www.cargeek.ir

www.CarGeek.ir

M.U.T.-III screen (The ECUs that are not adopted are not displayed).	Comment	Diagnosis detail	Reference page
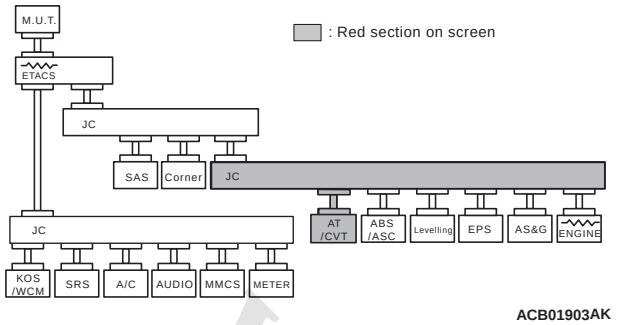	CAN-C: Disconnection in red displayed area is estimated.	Diagnosis Item 11 Diagnose when the M.U.T.-III cannot receive the data sent by A/T-ECU <A/T> or CVT-ECU <CVT>	
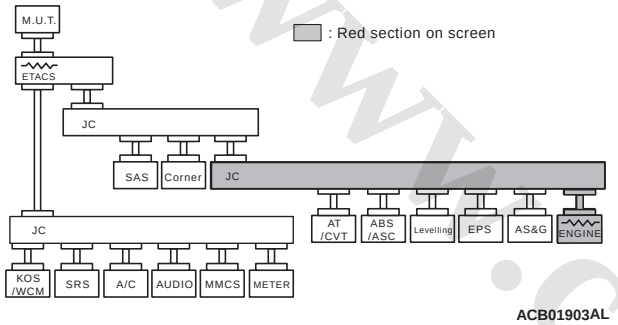	CAN-C: Disconnection in red displayed area is estimated.	Diagnosis Item 12 Diagnose when the M.U.T.-III cannot receive the data sent by engine-ECU	
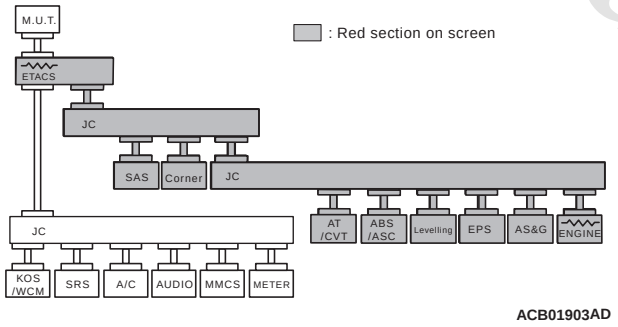	CAN-C: Disconnection in red displayed area is estimated.	Diagnosis Item 13 Diagnose the lines between the ETACS-ECU and joint connector (CAN2)	
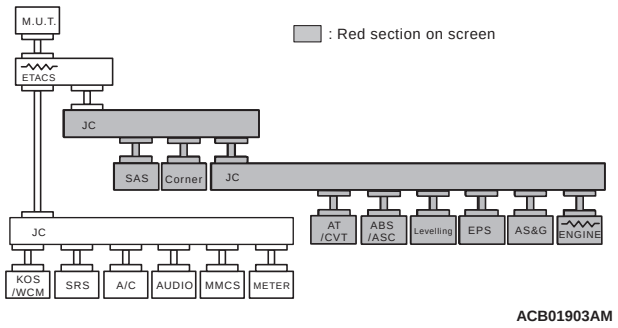	CAN-C: Disconnection in red displayed area is estimated.	Diagnosis Item 14 Diagnose the lines between joint connector (CAN2) and joint connector (CAN3)	

www.cargeek.ir

www.CarGeek.ir

M.U.T.-III screen (The ECUs that are not adopted are not displayed).	Comment	Diagnosis detail	Reference page
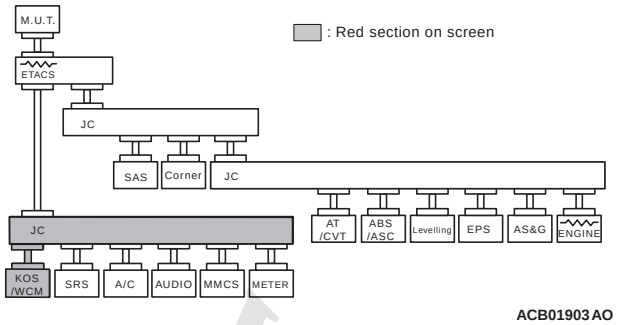	CAN-B: Disconnection in red displayed area is estimated.	Diagnosis Item 15 Diagnose when the M.U.T.-III cannot receive the data sent by KOS-ECU <vehicles with KOS>	
		Diagnosis Item 16 Diagnose when the M.U.T.-III cannot receive the data sent by WCM <vehicles without KOS>	
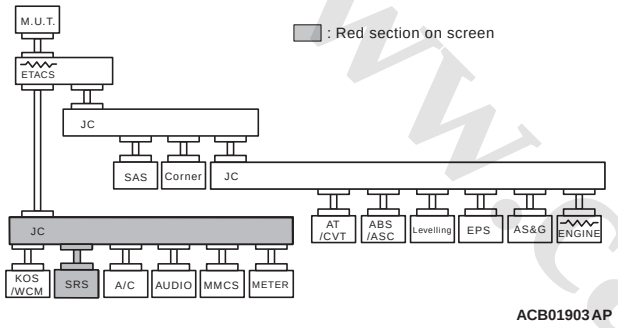	CAN-B: Disconnection in red displayed area is estimated.	Diagnosis Item 17 Diagnose when the M.U.T.-III cannot receive the data sent by SRS-ECU	
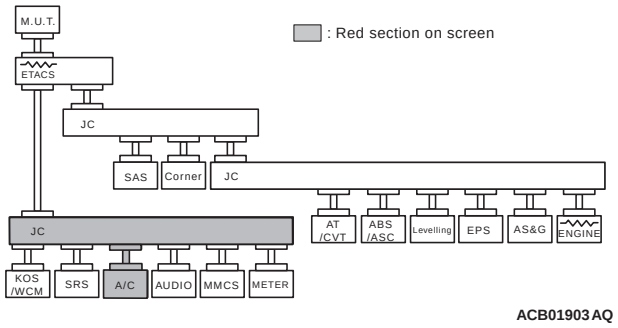	CAN-B: Disconnection in red displayed area is estimated.	Diagnosis Item 18 Diagnose when the M.U.T.-III cannot receive the data sent by heater control unit <vehicels without A/C> or A/C-ECU <vehicels with A/C>	
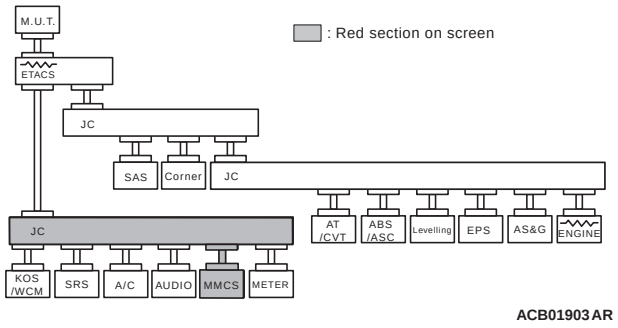	CAN-B: Disconnection in red displayed area is estimated.	Diagnosis Item 19 Diagnose when the M.U.T.-III cannot receive the data sent by CAN box unit <vehicles with MMCS (vehicles for Russia)>	

www.cargeek.ir

www.CarGeek.ir

M.U.T.-III screen (The ECUs that are not adopted are not displayed).	Comment	Diagnosis detail	Reference page
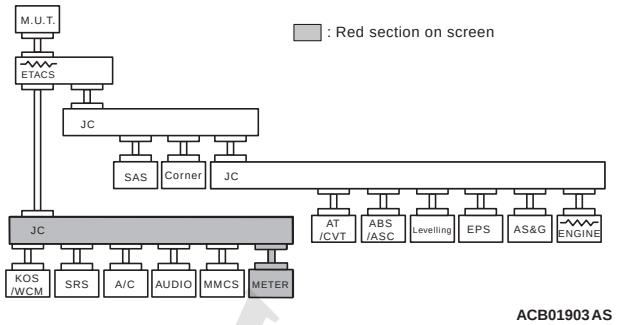	CAN-B: Disconnection in red displayed area is estimated.	Diagnosis Item 20 Diagnose when the M.U.T.-III cannot receive the data sent by combination meter	
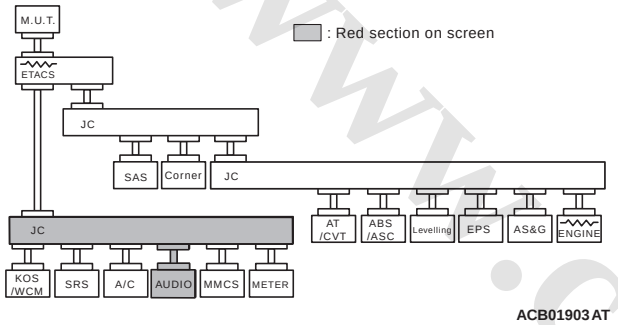	CAN-B: Disconnection in red displayed area is estimated.	Diagnosis Item 21 Diagnose when the M.U.T.-III cannot receive the data sent by radio and CD player <vehicles with radio and CD player >	
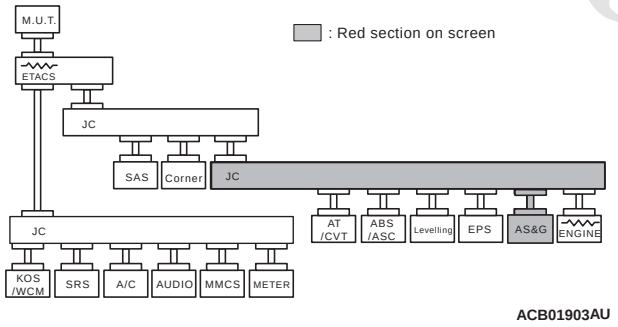	CAN-C: Disconnection in red displayed area is estimated.	Diagnosis Item 22 Diagnose when the M.U.T.-III cannot receive the data sent by AS&G-ECU <vehicles with automatic stop & go (AS&G) system>	

www.cargeek.ir

www.CarGeek.ir

M.U.T.-III screen (The ECUs that are not adopted are not displayed).	Comment	Diagnosis detail	Reference page
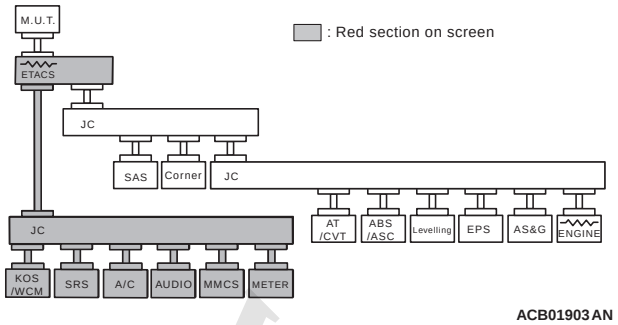	CAN-B: A failure in the red section, or a bus-off failure is present in the gateway ECU.	Diagnosis Item 23 Short to power supply or earth in both CAN_H and CAN_L lines of the CAN-B bus lines.	
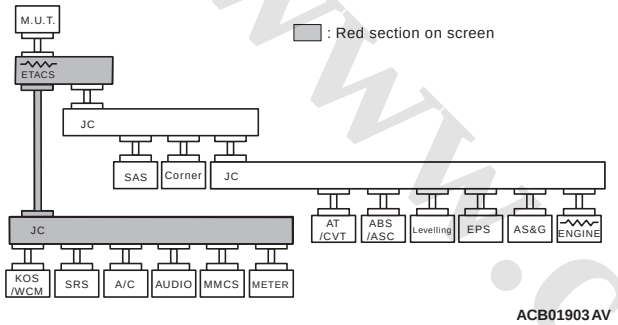	CAN-B: Disconnection in red displayed area is estimated.	Diagnosis Item 24 Diagnose the ETACS-ECU, joint connector (CAN1) or lines between ETACS-ECU and joint connector (CAN1)	
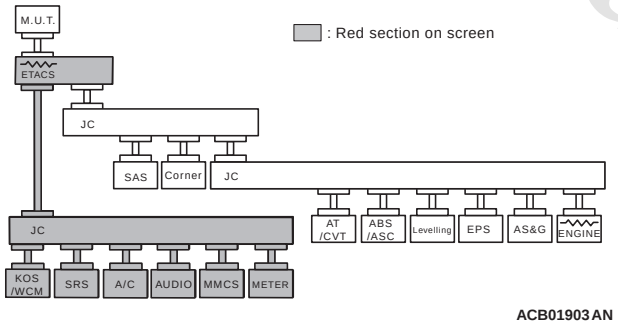	CAN-B: Disconnection in red displayed area is estimated.	Diagnosis Item 25 Short to power supply or earth, open circuit or line-to-line short in the CAN-B bus lines	

CAN-RELATED CONNECTOR POSITION

M1548304101183

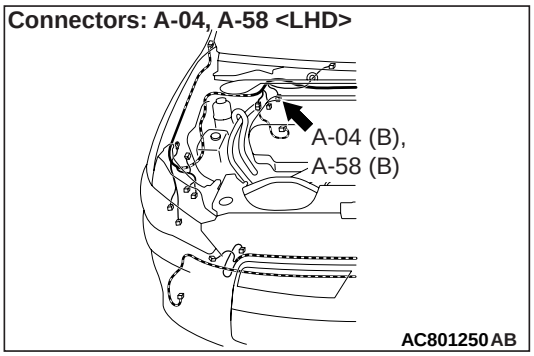

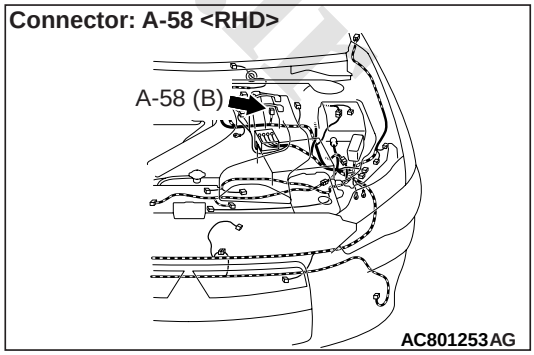

www.cargeek.ir

www.CarGeek.ir

Connectors: B-09, B-40

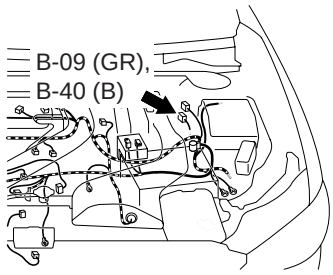

AC800715BC

Connectors: C-103, C-114, C-139 <LHD>

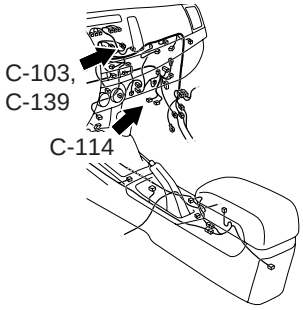

ACB02646AC

Connectors: C-01, C-03, C-04, C-06, C-23, C-26, C-32, C-35, C-40 <LHD>

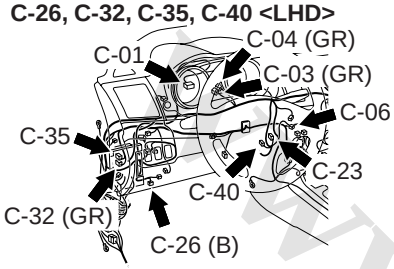

ACB02645AC

Connectors: C-122, C-124, C-127 <LHD>

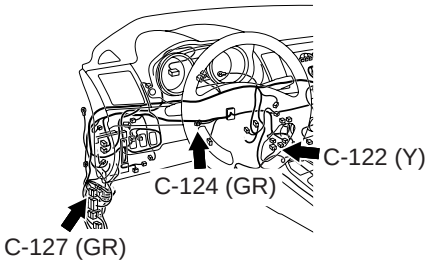

ACB02645AD

Connectors: C-01, C-04, C-06, C-14, C-23, C-26, C-64, C-103, C-122, C-124, C-139 <RHD>

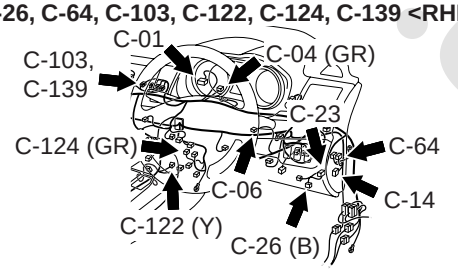

ACB02647AC

Connector: C-211 <LHD>

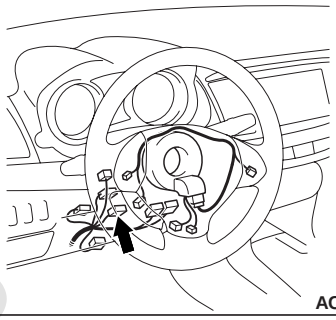

AC612708AW

Connectors: C-03, C-15, C-35, C-114, C-127 <RHD>

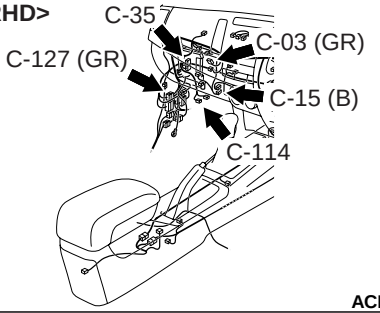

ACB02648AC

Connectors: C-211 <RHD>

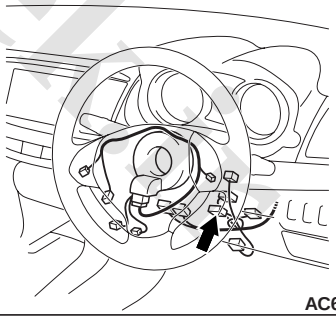

AC612716AX

Connectors: C-14, C-15, C-54, C-60, C-64 <LHD>

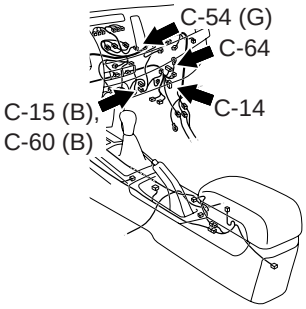

ACB02646AB

Connector: C-301 <LHD>

ETACS-ECU

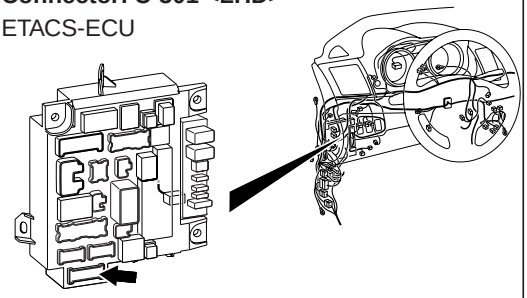

ACA00886BE

www.cargeek.ir

www.CarGeek.ir

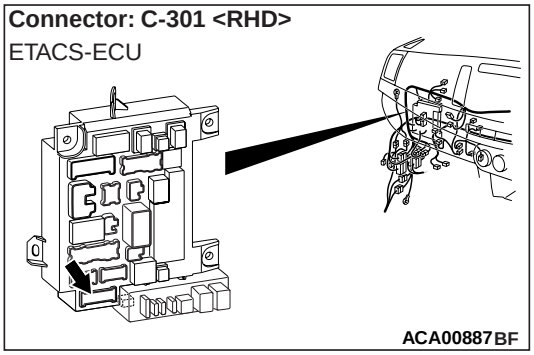

Connector No.	Connector name
A-04	ABS-ECU <Vehicles without ASC>
A-58	ASC-ECU <Vehicles with ASC>
B-09	Engine-ECU <Petrol>
B-40	Engine-ECU <Diesel>
C-01	Combination meter
C-03	Joint connector (CAN2)
C-04	Joint connector (CAN1)
C-06	WCM <Vehicles without KOS>
C-14	Headlamp automatic levelling-ECU <Vehicles with AFS>
C-15	A/C-ECU <Vehicles with A/C>
C-23	KOS-ECU <Vehicles with KOS>
C-26	Diagnosis connector
C-32	A/T-ECU <A/T>
C-35	CVT-ECU <CVT>
C-40	Corner sensor/back sensor-ECU <Vehicles with reversing sensor system>

Connector No.	Connector name
C-54	CAN box unit <vehicles with MMCS (Vehicles for Russia)>
C-60	Heater control unit <Vehicles without A/C>
C-64	AS&G-ECU <Vehicles with automatic stop & go (AS&G) system>
C-103	Radio and CD player <Vehicles with radio and CD player> or spare connector <Vehicles without audio>
C-114	Electric power steering-ECU <Vehicles with electric power steering>
C-122	SRS-ECU
C-124	Joint connector (CAN3)
C-127	Intermediate connector (Instrument panel wiring harness front wiring harness combination)
C-139	Intermediate connector (Instrument panel wiring harness and multivision display wiring harness combination) <Vehicles for Russia>
C-211	Steering wheel sensor <Vehicles with ASC or AFS>
C-301	ETACS-ECU

www.cargeek.ir

www.CarGeek.ir

CAN BUS DIAGNOSIS

Diagnosis Item 1: Diagnose when the M.U.T.-III cannot receive the data sent by ETACS-ECU

⚠ CAUTION

When servicing a CAN bus line, earth yourself by touching a metal object such as an unpainted water pipe. If you fail to do, a component connected to the CAN bus line may be broken.

Diagnosis CAN Communication Circuit

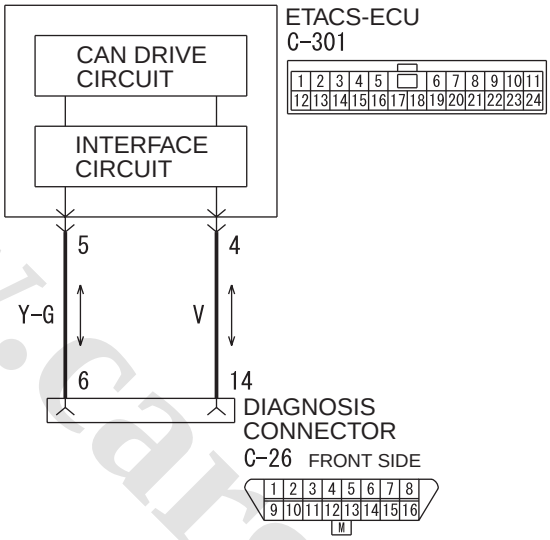

Wire colour code
B : Black LG : Light green G : Green L : Blue W : White Y : Yellow SB : Sky blue
BR : Brown O : Orange GR : Grey R : Red P : Pink V : Violet PU : Purple SI : Silver W9H54E111A

Connector: C-26 <LHD>

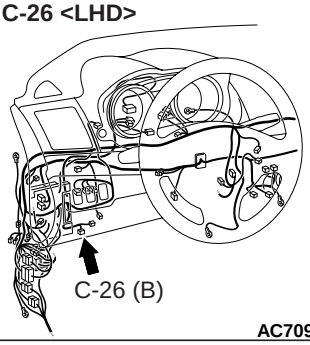

AC709893AK

Connector: C-301 <LHD>
ETACS-ECU

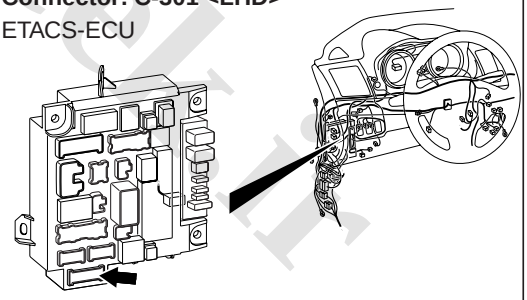

ACA00886BE

Connector: C-26 <RHD>

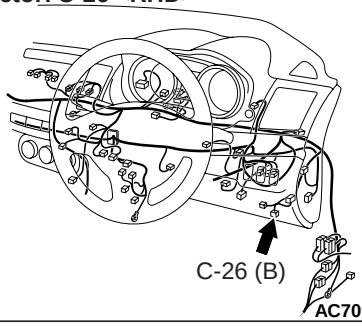

AC709897AD

Connector: C-301 <RHD>
ETACS-ECU

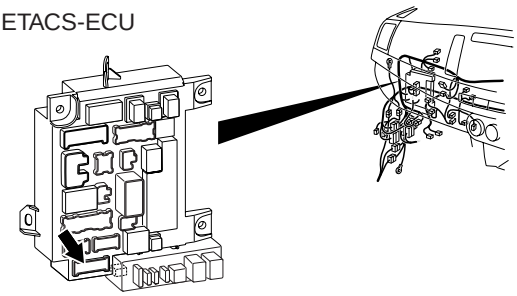

ACA00887BF

www.cargeek.ir

www.CarGeek.ir

FUNCTION
When the CAN bus diagnosis is carried out, the M.U.T.-III communicates with the ETACS-ECU. If a communication flag is not set for the ETACS-ECU, the ETACS-ECU will be diagnosed as a communication error.

TROUBLE JUDGEMENT CONDITIONS
If a communication flag is not set for the ETACS-ECU, the M.U.T.-III determines that there is a failure.

TROUBLESHOOTING HINTS
- Malfunction of the connector (diagnosis connector or ETACS-ECU connector improperly connected)
- Malfunction of the wiring harness (open circuit, short to earth, short to power supply system between the diagnosis connector and the ETACS-ECU connector, line-to-line short, or power supply line to the ETACS-ECU)
- Malfunction of ETACS-ECU

DIAGNOSIS PROCEDURE

STEP 1. Connector check: C-26 diagnosis connector and C-301 ETACS-ECU connector

⚠ CAUTION
The strand end of the twist wire should be within 10 cm from the connector. For details refer to .

Q: Is the check result normal?
YES : Go to Step 2.
NO : Repair the defective connector.

STEP 2. Check the wiring harness between C-26 diagnosis connector and C-301 ETACS-ECU connector for the continuity

⚠ CAUTION
Strictly observe the specified wiring harness repair procedure. For details refer to .
(1) Disconnect the M.U.T.-III and ETACS-ECU connector, and measure at the wiring harness side.
(2) Measure the continuity between C-26 diagnosis connector terminal No.6 and C-301 ETACS-ECU connector terminal No.5 <CAN_H>
OK: Continuity exists (2 Ω or less)
(3) Measure the continuity between C-26 diagnosis connector terminal No.14 and C-301 ETACS-ECU connector terminal No.4 <CAN_L>
OK: Continuity exists (2 Ω or less)

Q: Is the check result normal?
YES : Go to Step 3.
NO : Repair the wiring harness.

STEP 3. Check the wiring harness between C-26 diagnosis connector and C-301 ETACS-ECU connector for short to earth (resistance measurement).

⚠ CAUTION
- **Disconnect the negative battery terminal. For details refer to .**
- **A digital multimeter should be used. For details refer to .**
- **The test wiring harness should be used. For details refer to .**
- **Strictly observe the specified wiring harness repair procedure. For details refer to .**

(1) Disconnect the M.U.T.-III and the ETACS-ECU connector, and measure at the wiring harness side.
(2) Measure the resistance between C-26 diagnosis connector terminal No.6 and body earth. <CAN_H>
OK: 1 kΩ or more
(3) Measure the resistance between C-26 diagnosis connector terminal No.14 and body earth. <CAN_L>
OK: 1 kΩ or more

Q: Is the check result normal?
YES : Go to Step 4.
NO : Repair the wiring harness.

STEP 4. Check the wiring harness between C-26 diagnosis connector and C-301 ETACS-ECU connector for short to power supply (voltage measurement).

⚠ CAUTION
- **A digital multimeter should be used. For details refer to .**
- **The test wiring harness should be used. For details refer to .**
- **Strictly observe the specified wiring harness repair procedure. For details refer to .**

(1) Disconnect the M.U.T.-III and the ETACS-ECU connector, and measure at the wiring harness side.
(2) Turn the ignition switch to the ON position.
(3) Measure the voltage between C-26 diagnosis connector terminal No.6 and body earth. <CAN_H>
OK: 1 V or less
(4) Measure the voltage between C-26 diagnosis

www.cargeek.ir

www.CarGeek.ir

connector terminal No.14 and body earth.
<CAN_L>

OK: 1 V or less

Q: Is the check result normal?
YES : Go to Step 5.
NO : Repair the wiring harness.

STEP 5. Check the wiring harness between C-26 diagnosis connector and C-301 ETACS-ECU connector for line-to-line short (resistance measurement).

⚠ CAUTION
- **Disconnect the negative battery terminal. For details refer to .**
- **A digital multimeter should be used. For details refer to .**
- **The test wiring harness should be used. For details refer to .**
- **Strictly observe the specified wiring harness repair procedure. For details refer to .**

(1) Disconnect the M.U.T.-III and the ETACS-ECU connector, and check that there is continuity at the harness side.
(2) Check that there is continuity between C-26 diagnosis connector terminal Nos.6 and 14.

OK: No Continuity

Q: Is the check result normal?
YES : Go to Step 6.
NO : Repair the wiring harness.

STEP 6. Trouble symptom check
Diagnose the CAN bus line, and check that normal condition is displayed.

Q: Is the check result normal?
YES : The trouble can be an intermittent malfunction (Refer to GROUP 00 – How to use Troubleshooting/inspection Service Points – How to Cope with Intermittent Malfunction).
NO : Replace the ETACS-ECU.

Diagnosis Item 2: Malfunction of the ETACS-ECU

⚠ CAUTION
When servicing a CAN bus line, earth yourself by touching a metal object such as an unpainted water pipe. If you fail to do, a component connected to the CAN bus line may be broken.

FUNCTION
When the CAN bus diagnosis is carried out, the M.U.T.-III sets communication "OK" flags in the patch between the ETACS-ECU and active other ECUs. If a commutation "OK" flag is not set for the ECUs other than the ETACS-ECU, this diagnosis result will be set.

TROUBLE JUDGMENT CONDITIONS
If no communication flags are set for the ECUs (on the CAN-B or CAN-C lines) other than the ETACS-ECU, the ETACS-ECU determines that there is a failure.

TROUBLESHOOTING HINTS
- Malfunction of the ETACS-ECU

DIAGNOSIS PROCEDURE

M.U.T.-III other system diagnosis code
Check whether ETACS-ECU-related diagnosis code is set.

Q: Is the diagnosis code set?
The diagnosis code other than the U code is set. : Troubleshoot the ETACS-ECU. Refer to GROUP 54A – ETACS-ECU .
Only U-code diagnosis code is set or the diagnosis code is not set. : Check the power supply circuit of the ETACS-ECU. Refer to GROUP 54A – ETACS-ECU .

www.cargeek.ir

www.CarGeek.ir

Diagnosis Item 3: Abnormal short between the CAN-C bus lines

⚠ CAUTION

When servicing a CAN bus line, earth yourself by touching a metal object such as an unpainted water pipe. If you fail to do, a component connected to the CAN bus line may be broken.

www.cargeek.ir

www.cargeek.ir

www.CarGeek.ir

CAN-C Communication Circuit <Except for RALLIART>

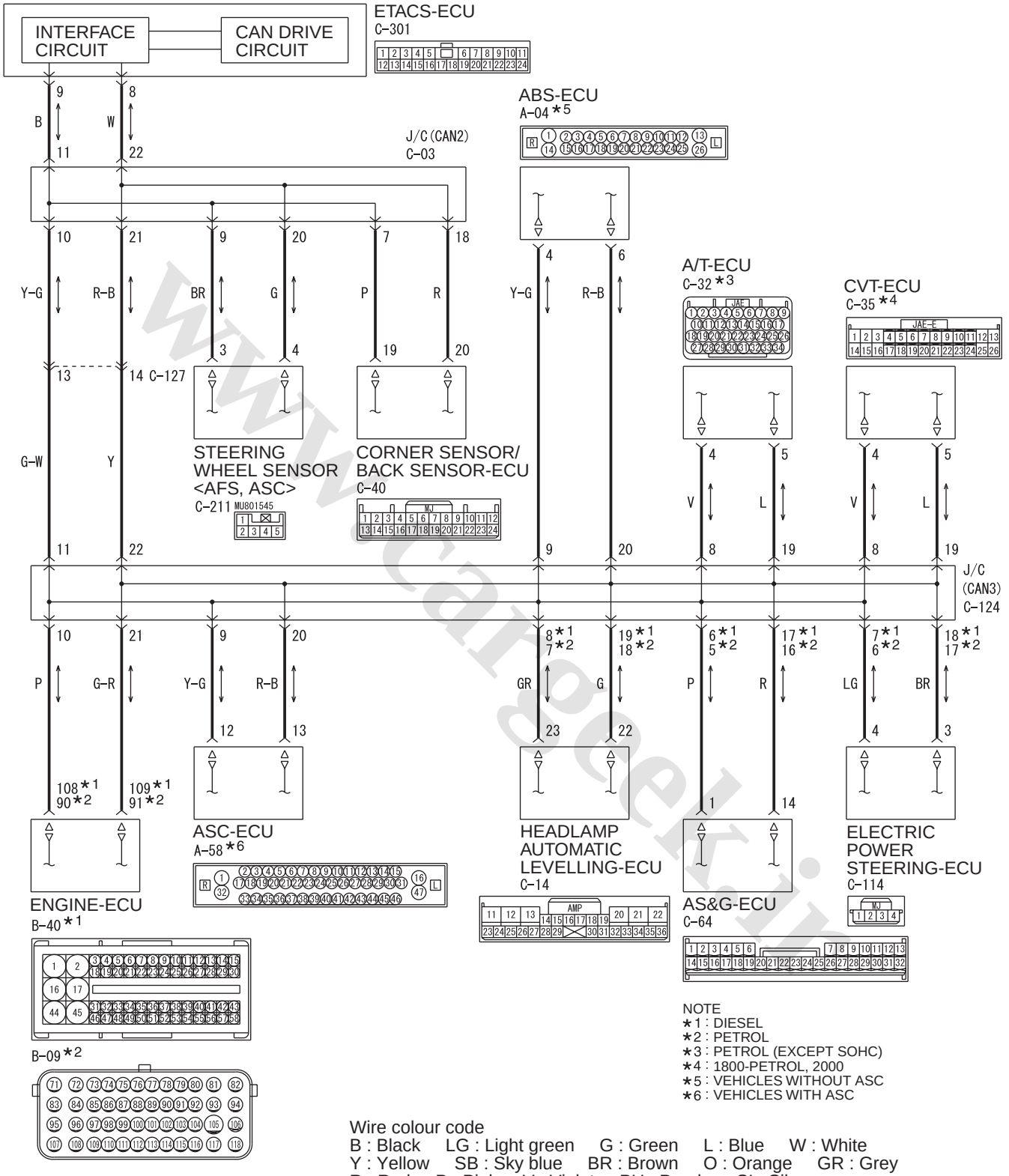

www.cargeek.ir

www.CarGeek.ir

Connectors: A-04, A-58 <LHD>

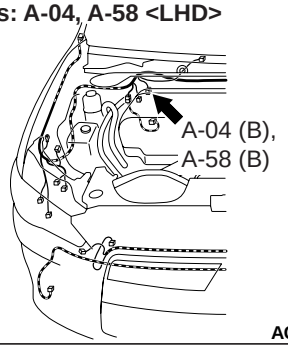

AC801250AB

Connectors: C-14, C-64, C-114 <LHD>

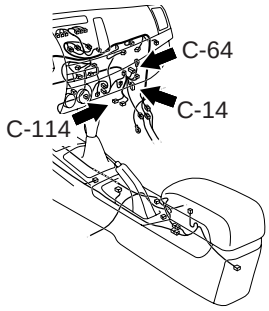

ACB02646AD

Connector: A-58 <RHD>

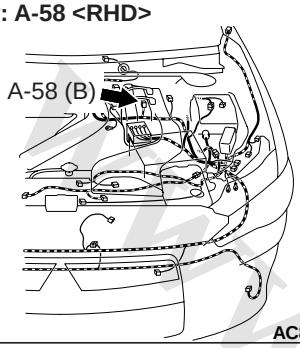

AC801253AG

Connectors: C-14, C-64, C-124 <RHD>

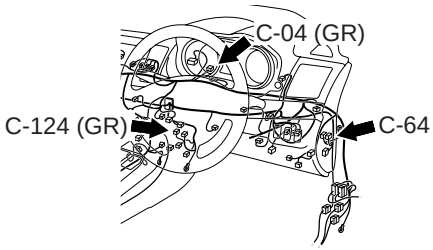

ACB02647AD

Connectors: B-09, B-40

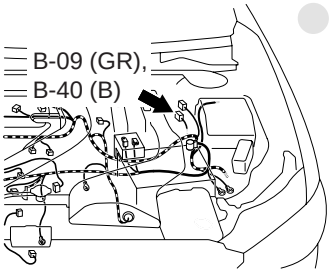

AC800715BC

Connector: C-211 <LHD>

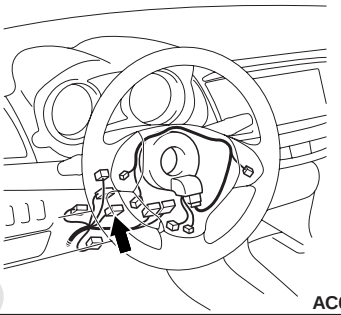

AC612708AW

Connectors: C-03, C-35, C-40, C-124, C-127 <LHD>

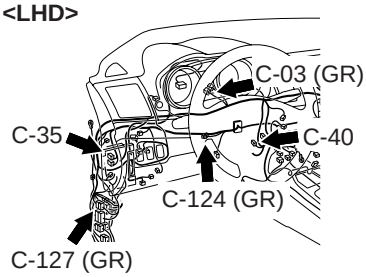

ACB02645AE

Connectors: C-211 <RHD>

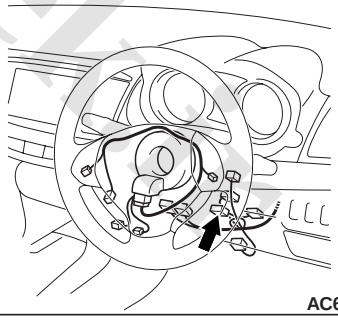

AC612716AX

Connectors: C-03, C-35, C-114, C-127 <RHD>

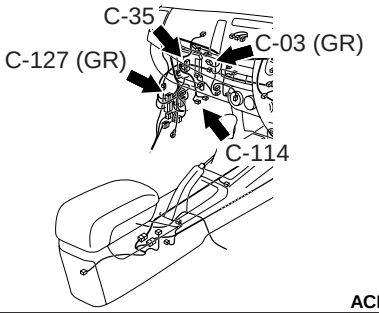

ACB02648AD

Connector: C-301 <LHD>

ETACS-ECU

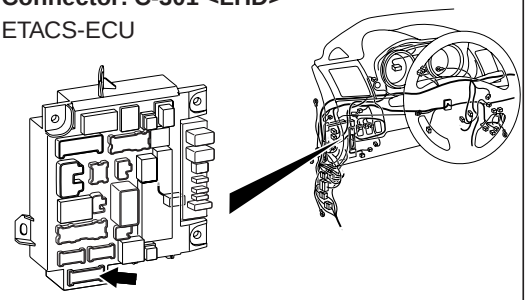

ACA00886BE

www.cargeek.ir

www.CarGeek.ir

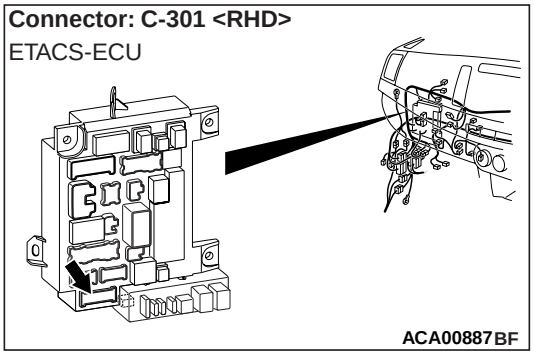

FUNCTION

If a line-to-line short is present in the CAN-C lines, this diagnosis result will be set.

TROUBLE JUDGEMENT CONDITIONS

If only diagnosis code U0001 is set, the ETACS-ECU determines that there is a failure.

TROUBLESHOOTING HINTS

- Malfunction of the connector (joint connectors or ECU connectors improperly connected)
- Malfunction of the wiring harness (line-to-line short in the CAN-C main or sub bus lines)
- Malfunction of the ECU (ECU on CAN-C lines failed)

DIAGNOSIS PROCEDURE

STEP 1. Connector check: C-03 joint connector (CAN2) and C-124 joint connector (CAN3)

⚠ CAUTION

The strand end of the twist wire should be within 10 cm from the connector. For details refer to .

Q: Is the check result normal?

YES <vehicles with ASC or AFS> : Go to Step 2.
YES <vehicles without ASC and without AFS with reversing sensor system> : Go to Step 3.
YES <vehicles without ASC and without AFS without reversing sensor system> : Go to Step 4.
NO : Repair the defective connector.

STEP 2. Check the wiring harness between C-211 steering wheel sensor connector and C-03 joint connector (CAN2) for line-to-line short.

⚠ CAUTION

- **A digital multimeter should be used. For details refer to .**
- **The test wiring harness should be used. For details refer to .**

(1) Disconnect joint connector (CAN2), and check that there is continuity at the harness side.
(2) Check that there is continuity between C-03 joint connector terminal No.9 and 20.

OK: No continuity

Q: Is the check result normal?

YES <vehicles with reversing sensor system> : Go to Step 3.
YES <vehicles without reversing sensor system> : Go to Step 4.
NO : Go to Step 11.

STEP 3. Check the wiring harness between C-40 Corner sensor/back sensor-ECU connector and C-03 joint connector (CAN2) for line-to-line short.

⚠ CAUTION

- **A digital multimeter should be used. For details refer to .**
- **The test wiring harness should be used. For details refer to .**

(1) Disconnect joint connector (CAN2), and check that there is continuity at the harness side.
(2) Check that there is continuity between C-03 joint connector terminal No.7 and 18.

OK: No continuity

Q: Is the check result normal?

YES : Go to Step 4.
NO : Go to Step 12.

STEP 4. Check the wiring harness between C-301 ETACS-ECU connector and C-03 joint connector (CAN2) for line-to-line short.

⚠ CAUTION

- **A digital multimeter should be used. For details refer to .**
- **The test wiring harness should be used. For details refer to .**

(1) Disconnect joint connector (CAN2), and check that there is continuity at the harness side.
(2) Check that there is continuity between C-03 joint connector terminal No.11 and 22.

OK: No continuity

Q: Is the check result normal?

YES <vehicles with AFS> : Go to Step 5.
YES <vehicles without AFS> : Go to Step 6.
NO : Go to Step 13.

www.cargeek.ir

www.CarGeek.ir

STEP 5. Check the wiring harness between C-14 headlamp automatic levelling-ECU connector and C-124 joint connector (CAN3) for line-to-line short.

⚠ CAUTION

- **A digital multimeter should be used. For details refer to .**
- **The test wiring harness should be used. For details refer to .**

(1) Disconnect joint connector (CAN3), and check that there is continuity at the harness side.
(2) Check that there is continuity between C-124 joint connector terminal No.7 and 18 <Petrol>.

OK: No continuity

(3) Check that there is continuity between C-124 joint connector terminal No.8 and 19 <Diesel>.

OK: No continuity

Q: Is the check result normal?
YES : Go to Step 6.
NO : Go to Step 14.

STEP 6. Check the wiring harness between A-04 ABS-ECU connector <vehicles without ASC> or A-58 ASC-ECU connector <vehicles with ASC> and C-124 joint connector (CAN3) for line-to-line short.

⚠ CAUTION

- **A digital multimeter should be used. For details refer to .**
- **The test wiring harness should be used. For details refer to .**

(1) Disconnect joint connector (CAN3), and check that there is continuity at the harness side.
(2) Check that there is continuity between C-124 joint connector terminal No.9 and 20.

OK: No continuity

Q: Is the check result normal?
YES <A/T or CVT> : Go to Step 7.
YES <M/T (vehicles with electric power steering) > : Go to Step 8.
YES <M/T (vehicles without electric power steering with automatic stop & go (AS&G) system)> : Go to Step 9.
YES <M/T (vehicles without electric power steering without automatic stop & go (AS&G) system)> : Go to Step 10.
NO : Go to Step 15.

STEP 7. Check the wiring harness between C-32 A/T-ECU connector <A/T> or C-35 CVT-ECU connector <CVT> and C-124 joint connector (CAN3) for line-to-line short.

⚠ CAUTION

- **A digital multimeter should be used. For details refer to .**
- **The test wiring harness should be used. For details refer to .**

(1) Disconnect joint connector (CAN3), and check that there is continuity at the harness side.
(2) Check that there is continuity between C-124 joint connector terminal No.8 and 19.

OK: No continuity

Q: Is the check result normal?
YES <vehicles with electric power steering> : Go to Step 8.
YES <vehicles without electric power steering and with automatic stop & go (AS&G) system> : Go to Step 9.
YES <vehicles without electric power steering and without automatic stop & go (AS&G) system> : Go to Step 10.
NO : Go to Step 16.

STEP 8. Check the wiring harness between C-114 electric power steering-ECU connector and C-124 joint connector (CAN3) for line-to-line short.

⚠ CAUTION

- **A digital multimeter should be used. For details refer to .**
- **The test wiring harness should be used. For details refer to .**

(1) Disconnect joint connector (CAN3), and check that there is continuity at the harness side.
(2) Check that there is continuity between C-124 joint connector terminal No.6 and 17 <Petrol>.

OK: No continuity

(3) Check that there is continuity between C-124 joint connector terminal No.7 and 18 <Diesel>.

OK: No continuity

Q: Is the check result normal?
YES <vehicles with automatic stop & go (AS&G) system> : Go to Step 9.
YES <vehicles without automatic stop & go (AS&G) system> : Go to Step 10.
NO : Go to Step 17.

www.cargeek.ir

www.CarGeek.ir

STEP 9. Check the wiring harness between C-64 AS&G-ECU connector and C-124 joint connector (CAN3) for line-to-line short.

⚠ CAUTION

- **A digital multimeter should be used. For details refer to .**
- **The test wiring harness should be used. For details refer to .**

(1) Disconnect joint connector (CAN3), and check that there is continuity at the harness side.
(2) Check that there is continuity between C-124 joint connector terminal No.16 and 5 <Petrol>.

OK: No continuity

(3) Check that there is continuity between C-124 joint connector terminal No.17 and 6 <Diesel>.

OK: No continuity

Q: Is the check result normal?
YES : Go to Step 10.
NO : Go to Step 18.

STEP 10. Check the wiring harness between B-09 <Petrol> or B-40 <Diesel> engine-ECU connector and C-124 joint connector (CAN3) for line-to-line short.

⚠ CAUTION

- **A digital multimeter should be used. For details refer to .**
- **The test wiring harness should be used. For details refer to .**
- **Strictly observe the specified wiring harness repair procedure. For details refer to .**

(1) Disconnect joint connector (CAN3), and check that there is continuity at the harness side.
(2) Check that there is continuity between C-124 joint connector terminal No.10 and 21.

OK: No continuity

Q: Is the check result normal?
YES : Check C-127 intermediate connector, and repair if necessary. If the intermediate connector is in good condition, repair the wiring harness between C-03 joint connector (CAN2) and C-124 joint connector (CAN3).
NO : Go to Step 19.

STEP 11. M.U.T.-III CAN bus diagnostics (checking the steering wheel sensor for internal short)

⚠ CAUTION

Strictly observe the specified wiring harness repair procedure. For details refer to .

Disconnect C-211 steering wheel sensor connector, and diagnose the CAN bus line.

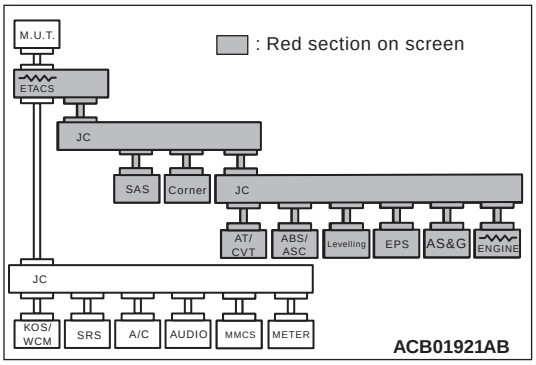

OK: The display of the M.U.T.-III is as shown in the figure.

Q: Does M.U.T.-III screen correspond to the illustration?
YES : Repair the wiring harness between C-211 steering wheel sensor connector and C-03 joint connector (CAN2).
NO : Check the steering wheel sensor connector, and repair if necessary. If the steering wheel sensor connector is in good condition, replace the steering wheel sensor.

www.cargeek.ir

www.CarGeek.ir

STEP 12. M.U.T.-III CAN bus diagnostics (checking the corner sensor/back sensor-ECU for internal short)

⚠ CAUTION

Strictly observe the specified wiring harness repair procedure. For details refer to .

Disconnect C-40 corner sensor/back sensor-ECU connector, and diagnose the CAN bus line.

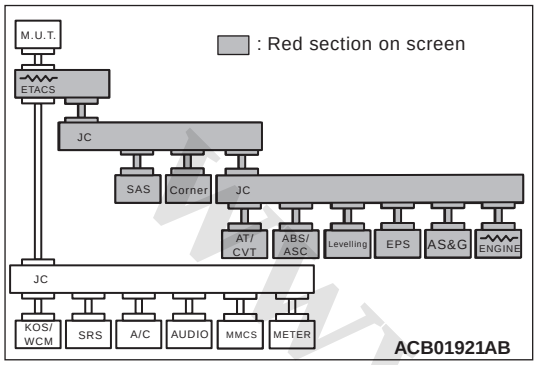

OK: The display of the M.U.T.-III is as shown in the figure.

Q: Does M.U.T.-III screen correspond to the illustration?

YES : Repair the wiring harness between C-40 corner sensor/back sensor-ECU connector and C-03 joint connector (CAN2).

NO : Check the corner sensor/back sensor-ECU connector, and repair if necessary. If the corner sensor/back sensor-ECU connector is in good condition, replace the corner sensor/back sensor-ECU.

STEP 13. Check the wiring harness between C-301 ETACS-ECU connector and C-03 joint connector (CAN2) for line-to-line short.

⚠ CAUTION

- **A digital multimeter should be used. For details refer to .**
- **The test wiring harness should be used. For details refer to .**
- **Strictly observe the specified wiring harness repair procedure. For details refer to .**

(1) Disconnect the ETACS-ECU connector and the joint connector (CAN2), and check that there is continuity at the harness side.

(2) Check that there is continuity between C-03 joint connector terminal No.6 and 19.

OK: No continuity

Q: Is the check result normal?

YES : Check the ETACS-ECU connector, and repair if necessary. If the ETACS-ECU connector is in good condition, replace the ETACS-ECU.

NO : Repair the wiring harness between C-301 ETACS-ECU connector and C-03 joint connector (CAN2).

STEP 14. M.U.T.-III CAN bus diagnostics (checking the headlamp automatic levelling-ECU for internal short)

⚠ CAUTION

Strictly observe the specified wiring harness repair procedure. For details refer to .

Disconnect C-14 headlamp automatic levelling-ECU connector, and diagnose C-14 headlamp automatic levelling-ECU the CAN bus line.

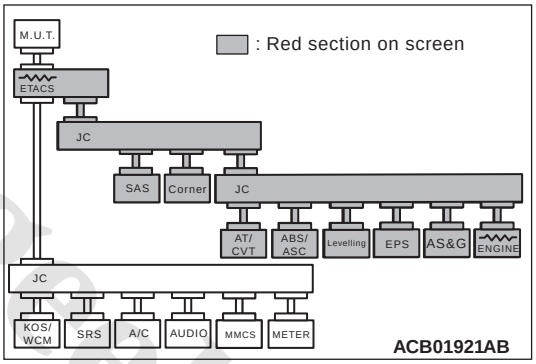

OK: The display of the M.U.T.-III is as shown in the figure.

Q: Does M.U.T.-III screen correspond to the illustration?

YES : Repair the wiring harness between C-14 headlamp automatic levelling-ECU connector and C-124 joint connector (CAN3).

NO : Check the headlamp automatic levelling-ECU connector, and repair if necessary. If the headlamp automatic levelling-ECU connector is in good condition, replace the headlamp automatic levelling-ECU.

www.cargeek.ir

www.CarGeek.ir

STEP 15. M.U.T.-III CAN bus diagnostics (checking the ABS-ECU <vehicles without ASC> or ASC-ECU <vehicles with ASC> for internal short)

⚠ CAUTION

Strictly observe the specified wiring harness repair procedure. For details refer to .

Disconnect A-04 ABS-ECU connector <vehicles without ASC> or A-58 ASC-ECU connector <vehicles with ASC>, and diagnose the CAN bus line.

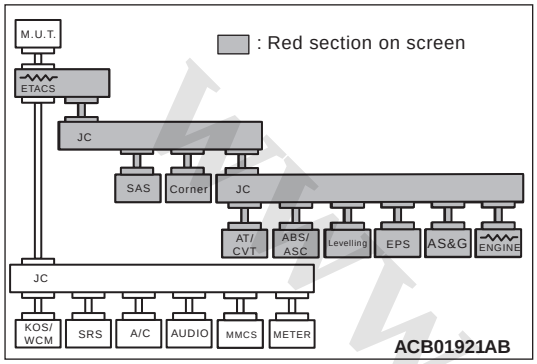

OK: The display of the M.U.T.-III is as shown in the figure.

Q: Does M.U.T.-III screen correspond to the illustration?

YES : Repair the wiring harness between A-04 ABS-ECU connector <vehicles without ASC> or A-58 ASC-ECU connector <vehicles with ASC> and C-124 joint connector (CAN3).

NO : Check the ABS-ECU connector <vehicles without ASC> or ASC-ECU connector <vehicles with ASC>, and repair if necessary. If the ABS-ECU connector <vehicles without ASC> or ASC-ECU connector <vehicles with ASC> is in good condition, replace the ABS-ECU <vehicles without ASC> or ASC-ECU <vehicles with ASC>.

STEP 16. M.U.T.-III CAN bus diagnostics (checking the A/T-ECU <A/T> or CVT-ECU <CVT> for internal short)

⚠ CAUTION

Strictly observe the specified wiring harness repair procedure. For details refer to .

Disconnect C-32 A/T-ECU connector <A/T> or C-35 CVT-ECU connector <CVT>, and diagnose the CAN bus line.

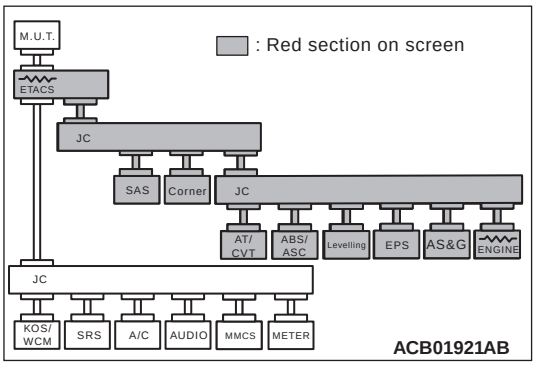

OK: The display of the M.U.T.-III is as shown in the figure.

Q: Does M.U.T.-III screen correspond to the illustration?

YES : Repair the wiring harness between C-32 A/T-ECU connector <A/T> or C-35 CVT-ECU connector <CVT> and C-124 joint connector (CAN3).

NO : Check the A/T-ECU connector <A/T> or CVT-ECU connector <CVT>, and repair if necessary. If the A/T-ECU connector <A/T> or CVT-ECU connector <CVT> is in good condition, replace the A/T-ECU <A/T> or CVT-ECU <CVT>.

www.cargeek.ir

www.CarGeek.ir

STEP 17. M.U.T.-III CAN bus diagnostics (checking the electric power steering-ECU for internal short)

⚠ CAUTION

Strictly observe the specified wiring harness repair procedure. For details refer to .

Disconnect C-114 electric power steering-ECU connector, and diagnose the CAN bus line.

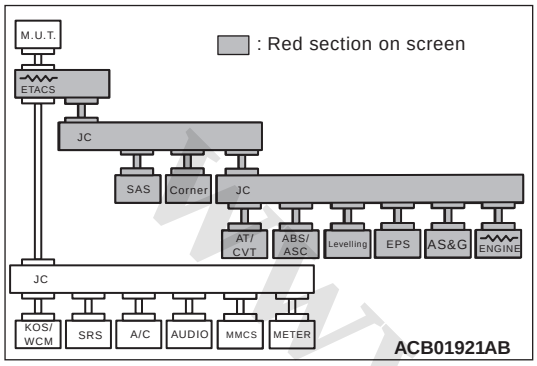

OK: The display of the M.U.T.-III is as shown in the figure.

Q: Does M.U.T.-III screen correspond to the illustration?

YES : Repair the wiring harness between C-114 electric power steering-ECU connector and C-124 joint connector (CAN3).

NO : Check the electric power steering-ECU connector, and repair if necessary. If the electric power steering-ECU connector is in good condition, replace the electric power steering-ECU.

STEP 18. M.U.T.-III CAN bus diagnostics (checking the C-64 AS&G-ECU for internal short)

⚠ CAUTION

Strictly observe the specified wiring harness repair procedure. For details refer to .

Disconnect C-64 AS&G-ECU connector, and diagnose the CAN bus line.

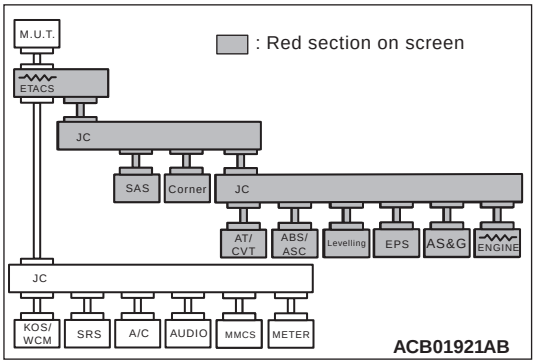

OK: The display of the M.U.T.-III is as shown in the figure.

Q: Does M.U.T.-III screen correspond to the illustration?

YES : Repair the wiring harness between C-64 AS&G-ECU connector and C-124 joint connector (CAN3).

NO : Check the AS&G-ECU connector, and repair if necessary. If the AS&G-ECU connector is in good condition, replace the AS&G-ECU.

www.cargeek.ir

www.CarGeek.ir

STEP 19. M.U.T.-III CAN bus diagnostics (checking the engine-ECU for internal short)

⚠ CAUTION

Strictly observe the specified wiring harness repair procedure. For details refer to .

Disconnect B-09 <except 1800-Diesel> or B-40 <1800-Diesel> engine-ECU connector, and diagnose the CAN bus line.

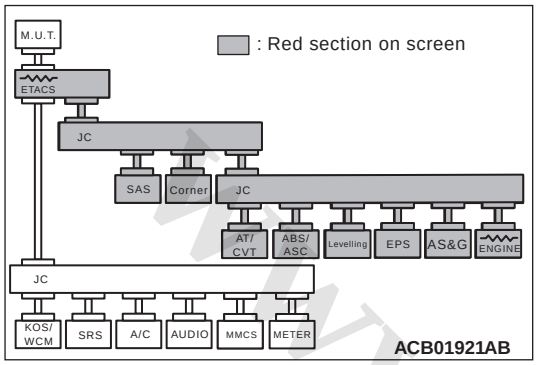

OK: The display of the M.U.T.-III is as shown in the figure.

Q: Does M.U.T.-III screen correspond to the illustration?

YES : Repair the wiring harness between B-09 <Petrol> or B-40 <Diesel> engine-ECU connector and C-124 joint connector (CAN3).

NO : Check the engine-ECU connector, and repair if necessary. If the engine-ECU connector is in good condition, replace the engine-ECU.

www.cargeek.ir

www.CarGeek.ir

Diagnosis Item 4: Diagnose shorts in the earth to CAN-C bus line

⚠ CAUTION

When servicing a CAN bus line, earth yourself by touching a metal object such as an unpainted water pipe. If you fail to do, a component connected to the CAN bus line may be broken.

www.cargeek.ir

www.cargeek.ir

www.CarGeek.ir

CAN-C Communication Circuit <Except for RALLIART>

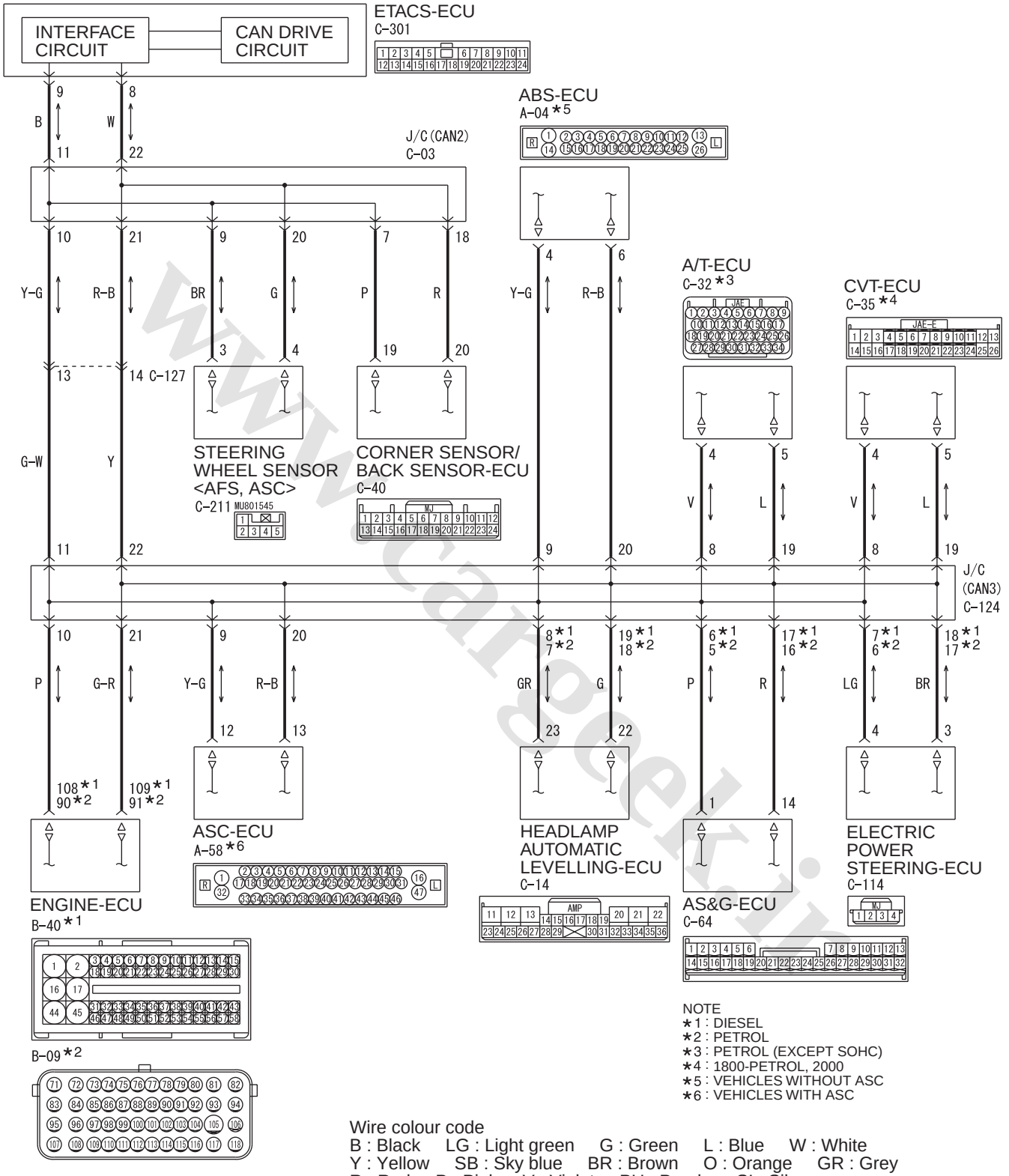

www.cargeek.ir

www.CarGeek.ir

Connectors: A-04, A-58 <LHD>

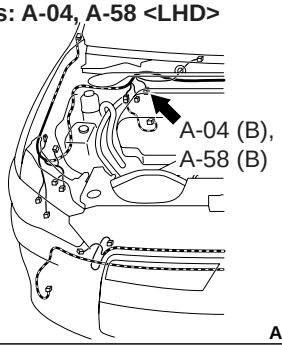

AC801250AB

Connectors: C-14, C-64, C-114 <LHD>

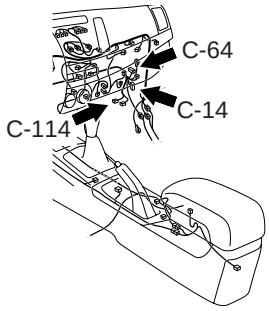

ACB02646AD

Connector: A-58 <RHD>

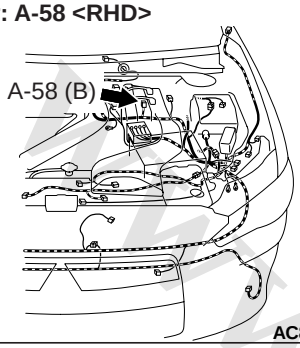

AC801253AG

Connectors: C-14, C-64, C-124 <RHD>

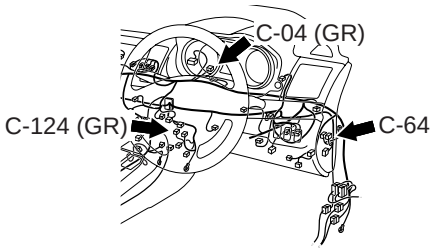

ACB02647AD

Connectors: B-09, B-40

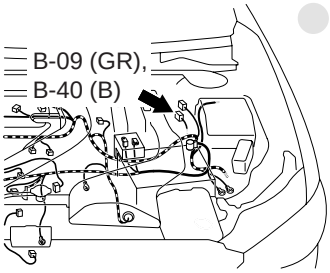

AC800715BC

Connector: C-211 <LHD>

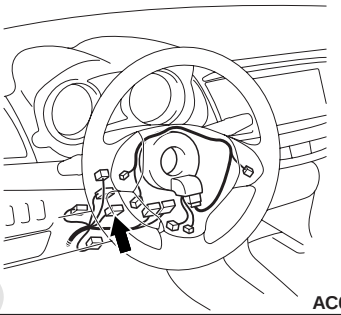

AC612708AW

Connectors: C-03, C-35, C-40, C-124, C-127 <LHD>

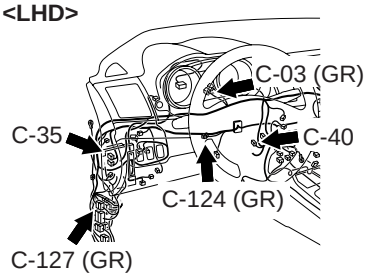

ACB02645AE

Connectors: C-211 <RHD>

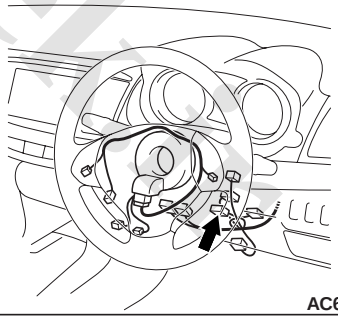

AC612716AX

Connectors: C-03, C-35, C-114, C-127 <RHD>

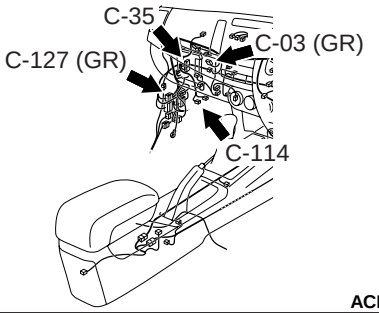

ACB02648AD

Connector: C-301 <LHD>

ETACS-ECU

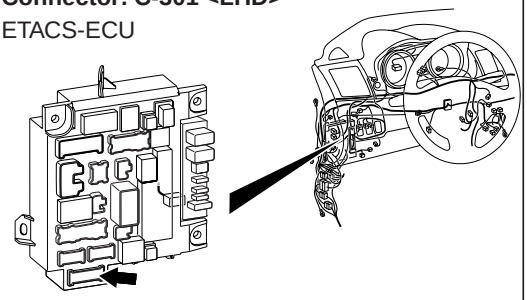

ACA00886BE

www.cargeek.ir

www.CarGeek.ir

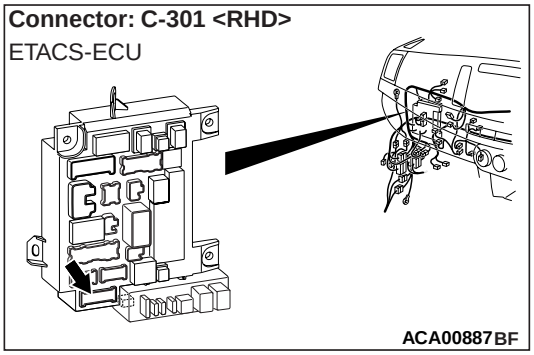

FUNCTION
If a short to earth is present in the CAN-C lines, this diagnosis result will be set.

TROUBLE JUDGEMENT CONDITIONS
If diagnosis code U1120 is set, the ETACS-ECU determines that there is a failure.

TROUBLESHOOTING HINTS
- Malfunction of the connector (short to earth inside connector)
- Malfunction of the wiring harness (short to earth in the CAN-C main or sub bus lines)
- Malfunction of the ECU (ETACS-ECU, or ECUs on CAN-C lines failed)

DIAGNOSIS PROCEDURE

STEP 1. Check the wiring harness between C-301 ETACS-ECU connector and C-03 joint connector (CAN2) for short to earth (resistance measurement).

⚠ CAUTION
- **Disconnect the negative battery terminal. For details refer to .**
- **A digital multimeter should be used. For details refer to .**
- **The test wiring harness should be used. For details refer to .**

(1) Disconnect joint connector (CAN2), and measure at the wiring harness side.
(2) Resistance between C-03 joint connector (CAN2) terminal No.11 and body earth.
OK: 1 kΩ or more
(3) Resistance between C-03 joint connector (CAN2) terminal No.22 and body earth.
OK: 1 kΩ or more

Q: Is the check result normal?
YES <vehicles with ASC or AFS> : Go to Step 2.
YES <vehicles without ASC and without AFS with reversing sensor system> : Go to Step 3.
YES <vehicles without ASC and without AFS without reversing sensor system> : Go to Step 4.
NO : Go to Step 12.

STEP 2. Check the wiring harness between C-211 steering wheel sensor connector and C-03 joint connector (CAN2) for short to earth (resistance measurement).

⚠ CAUTION
- **Disconnect the negative battery terminal. For details refer to .**
- **A digital multimeter should be used. For details refer to .**
- **The test wiring harness should be used. For details refer to .**

(1) Disconnect joint connector (CAN2), and measure at the wiring harness side.
(2) Resistance between C-03 joint connector (CAN2) terminal No.9 and body earth.
OK: 1 kΩ or more
(3) Resistance between C-03 joint connector (CAN2) terminal No.20 and body earth.
OK: 1 kΩ or more

Q: Is the check result normal?
YES <vehicles with reversing sensor system> : Go to Step 3.
YES <vehicles without reversing sensor system> : Go to Step 4.
NO : Go to Step 10.

STEP 3. Check the wiring harness between C-40 corner sensor/back sensor-ECU connector and C-03 joint connector (CAN2) for short to earth (resistance measurement).

⚠ CAUTION
- **Disconnect the negative battery terminal. For details refer to .**
- **A digital multimeter should be used. For details refer to .**
- **The test wiring harness should be used. For details refer to .**

(1) Disconnect joint connector (CAN2), and measure at the wiring harness side.
(2) Resistance between C-03 joint connector (CAN2) terminal No.7 and body earth.
OK: 1 kΩ or more
(3) Resistance between C-03 joint connector (CAN2)

www.cargeek.ir

www.CarGeek.ir

terminal No.18 and body earth.

OK: 1 kΩ or more

Q: Is the check result normal?
YES <vehicles with AFS> : Go to Step 4.
YES <vehicles without AFS> : Go to Step 5.
NO : Go to Step 11.

STEP 4. Check the wiring harness between C-14 headlamp automatic levelling-ECU connector and C-124 joint connector (CAN3) for short to earth (resistance measurement).

⚠ CAUTION
- **Disconnect the negative battery terminal. For details refer to .**
- **A digital multimeter should be used. For details refer to .**
- **The test wiring harness should be used. For details refer to .**

(1) Disconnect joint connector (CAN3), and measure at the wiring harness side.
(2) Resistance between C-124 joint connector (CAN3) terminal No.7 <Petrol> or 8 <Diesel> and body earth

OK: 1 kΩ or more

(3) Resistance between C-124 joint connector (CAN3) terminal No.18 <Petrol> or 19 <Diesel> and body earth

OK: 1 kΩ or more

Q: Is the check result normal?
YES : Go to Step 5.
NO : Go to Step 13.

STEP 5. Check the wiring harness between A-04 ABS-ECU connector <vehicles without ASC> or A-58 ASC-ECU connector <vehicles with ASC> and C-124 joint connector (CAN3) for short to earth (resistance measurement).

⚠ CAUTION
- **Disconnect the negative battery terminal. For details refer to .**
- **A digital multimeter should be used. For details refer to .**
- **The test wiring harness should be used. For details refer to .**

(1) Disconnect joint connector (CAN3), and measure at the wiring harness side.
(2) Resistance between C-124 joint connector (CAN3) terminal No.9 and body earth

OK: 1 kΩ or more

(3) Resistance between C-124 joint connector (CAN3) terminal No.20 and body earth

OK: 1 kΩ or more

Q: Is the check result normal?
YES <A/T or CVT> : Go to Step 6.
YES <M/T (vehicles with electric power steering) > : Go to Step 7.
YES <M/T (vehicles without electric power steering and with automatic stop & go (AS&G) system)> : Go to Step 8.
YES <M/T (vehicles without electric power steering and without automatic stop & go (AS&G) system)> : Go to Step 9.
NO : Go to Step 14.

STEP 6. Check the wiring harness between C-32 A/T-ECU connector <A/T> or C-35 CVT-ECU connector <CVT> and C-124 joint connector (CAN3) for short to earth (resistance measurement).

⚠ CAUTION
- **Disconnect the negative battery terminal. For details refer to .**
- **A digital multimeter should be used. For details refer to .**
- **The test wiring harness should be used. For details refer to .**

(1) Disconnect joint connector (CAN3), and measure at the wiring harness side.
(2) Resistance between C-124 joint connector (CAN3) terminal No.8 and body earth

OK: 1 kΩ or more

(3) Resistance between C-124 joint connector (CAN3) terminal No.19 and body earth

OK: 1 kΩ or more

Q: Is the check result normal?
YES <vehicles with electric power steering> : Go to Step 7.
YES <vehicles without electric power steering and with automatic stop & go (AS&G) system> : Go to Step 8.
YES <vehicles without electric power steering and without automatic stop & go (AS&G) system> : Go to Step 9.
NO : Go to Step 15.

www.cargeek.ir

www.CarGeek.ir

STEP 7. Check the wiring harness between C-114 electric power steering-ECU connector and C-124 joint connector (CAN3) for short to earth (resistance measurement).

⚠ CAUTION

- **Disconnect the negative battery terminal. For details refer to .**
- **A digital multimeter should be used. For details refer to .**
- **The test wiring harness should be used. For details refer to .**

(1) Disconnect joint connector (CAN3), and measure at the wiring harness side.
(2) Resistance between C-124 joint connector (CAN3) terminal No.6 <Petrol> or 7 <Diesel> and body earth

OK: 1 kΩ or more

(3) Resistance between C-124 joint connector (CAN3) terminal No.17 <Petrol> or 18 <Diesel> and body earth

OK: 1 kΩ or more

Q: Is the check result normal?
YES <vehicles with automatic stop & go (AS&G) system> : Go to Step 8.
YES <vehicles without automatic stop & go (AS&G) system> : Go to Step 9.
NO : Go to Step 16.

STEP 8. Check the wiring harness between C-64 AS&G-ECU connector and C-124 joint connector (CAN3) for short to earth (resistance measurement).

⚠ CAUTION

- **Disconnect the negative battery terminal. For details refer to .**
- **A digital multimeter should be used. For details refer to .**
- **The test wiring harness should be used. For details refer to .**

(1) Disconnect joint connector (CAN3), and measure at the wiring harness side.
(2) Resistance between C-124 joint connector (CAN3) terminal No.16 <Petrol> or 17 <Diesel> and body earth

OK: 1 kΩ or more

(3) Resistance between C-124 joint connector (CAN3) terminal No.5 <Petrol> or 6 <Diesel> and body earth

OK: 1 kΩ or more

Q: Is the check result normal?
YES : Go to Step 9.
NO : Go to Step 17.

STEP 9. Check the wiring harness between B-09 <Petrol> or B-40 <Diesel> engine-ECU connector and C-124 joint connector (CAN3) for short to earth (resistance measurement).

⚠ CAUTION

- **Disconnect the negative battery terminal. For details refer to .**
- **A digital multimeter should be used. For details refer to .**
- **The test wiring harness should be used. For details refer to .**

(1) Disconnect joint connector (CAN3), and measure at the wiring harness side.
(2) Resistance between C-124 joint connector (CAN3) terminal No.10 and body earth

OK: 1 kΩ or more

(3) Resistance between C-124 joint connector (CAN3) terminal No.21 and body earth

OK: 1 kΩ or more

Q: Is the check result normal?
YES : Check C-127 intermediate connector, and repair if necessary. If the intermediate connector is in good condition, repair the wiring harness between C-03 joint connector (CAN2) and C-124 joint connector (CAN3).
NO : Go to Step 18.

www.cargeek.ir

www.CarGeek.ir

STEP 10. M.U.T.-III CAN bus diagnostics (checking the steering wheel sensor for internal short to earth)

⚠ CAUTION

Strictly observe the specified wiring harness repair procedure. For details refer to .

Disconnect C-211 steering wheel sensor connector, and diagnose the CAN bus line.

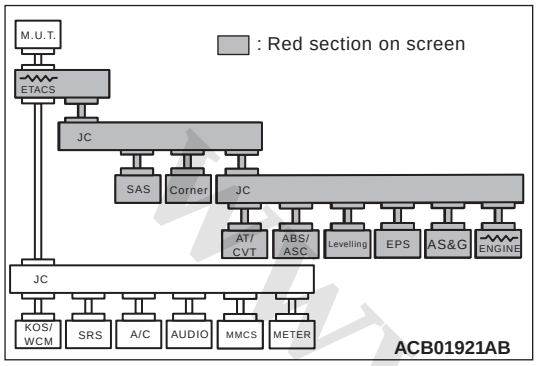

OK: The display of the M.U.T.-III is as shown in the figure.

Q: Does M.U.T.-III screen correspond to the illustration?

YES : Repair the wiring harness between C-211 steering wheel sensor connector and C-03 joint connector (CAN2).

NO : Check the steering wheel sensor connector, and repair if necessary. If the steering wheel sensor connector is in good condition, replace the steering wheel sensor.

STEP 11. M.U.T.-III CAN bus diagnostics (checking the corner sensor/back sensor-ECU for internal short to earth)

⚠ CAUTION

Strictly observe the specified wiring harness repair procedure. For details refer to .

Disconnect C-40 corner sensor/back sensor-ECU connector, and diagnose the CAN bus line.

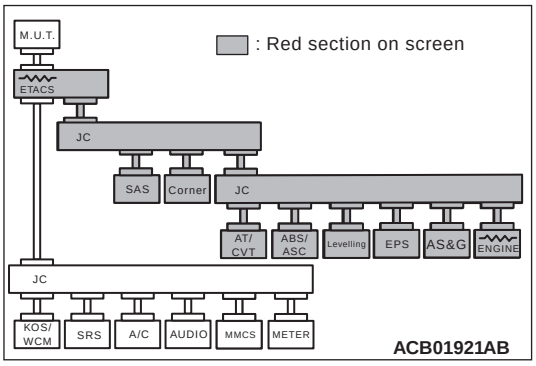

OK: The display of the M.U.T.-III is as shown in the figure.

Q: Does M.U.T.-III screen correspond to the illustration?

YES : Repair the wiring harness between C-125 corner sensor/back sensor-ECU connector and C-03 joint connector (CAN2).

NO : Check the corner sensor/back sensor-ECU connector, and repair if necessary. If the corner sensor/back sensor-ECU connector is in good condition, replace the corner sensor/back sensor-ECU.

STEP 12. Check the wiring harness between C-301 ETACS-ECU connector and C-03 joint connector (CAN2) for short to earth (resistance measurement).

⚠ CAUTION

- **Disconnect the negative battery terminal. For details refer to .**
- **A digital multimeter should be used. For details refer to .**
- **The test wiring harness should be used. For details refer to .**
- **Strictly observe the specified wiring harness repair procedure. For details refer to .**

(1) Disconnect ETACS-ECU connector and joint connector (CAN2), and measure at the wiring harness side.

(2) Measure the resistance between C-03 joint connector (CAN2) terminal No.11 and body earth.

www.cargeek.ir

www.CarGeek.ir

<CAN_H>

OK: 1 kΩ or more

(3) Measure the resistance between C-03 joint connector (CAN2) terminal No.22 and body earth. <CAN_L>

OK: 1 kΩ or more

Q: Is the check result normal?

YES : Check the ETACS-ECU connector, and repair if necessary. If the ETACS-ECU connector is in good condition, replace the ETACS-ECU.

NO : Repair the wiring harness between C-301 ETACS-ECU connector and C-03 joint connector (CAN2).

STEP 13. M.U.T.-III CAN bus diagnostics (checking the headlamp automatic levelling-ECU for internal short to earth)

⚠ CAUTION

Strictly observe the specified wiring harness repair procedure. For details refer to .

Disconnect C-14 headlamp automatic levelling-ECU connector, and diagnose the CAN bus line.

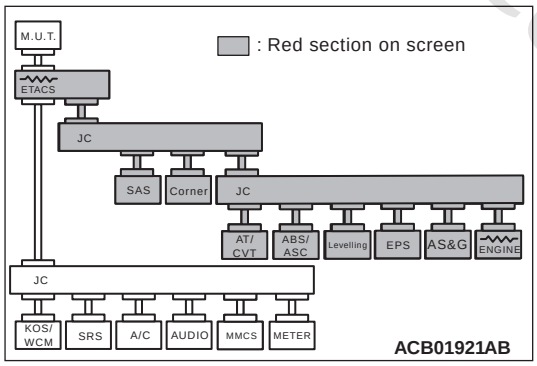

OK: The display of the M.U.T.-III is as shown in the figure.

Q: Does M.U.T.-III screen correspond to the illustration?

YES : Repair the wiring harness between C-14 headlamp automatic levelling-ECU connector and C-124 joint connector (CAN3).

NO : Check the C-14 headlamp automatic levelling-ECU connector, and repair if necessary. If the C-14 headlamp automatic levelling-ECU connector is in good condition, replace the C-14 headlamp automatic levelling-ECU.

STEP 14. M.U.T.-III CAN bus diagnostics (checking the ABS-ECU <vehicles without ASC> or ASC-ECU <vehicles with ASC> for internal short to earth)

⚠ CAUTION

Strictly observe the specified wiring harness repair procedure. For details refer to .

Disconnect A-04 ABS-ECU connector <vehicles without ASC> or A-58 ASC-ECU connector <vehicles with ASC>, and diagnose the CAN bus line.

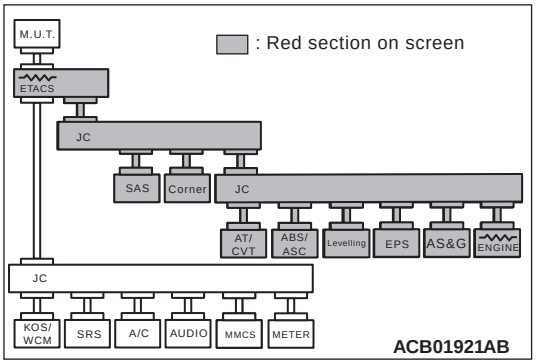

OK: The display of the M.U.T.-III is as shown in the figure.

Q: Does M.U.T.-III screen correspond to the illustration?

YES : Repair the wiring harness between A-04 ABS-ECU connector <vehicles without ASC> or A-58 ASC-ECU connector <vehicles with ASC> and C-124 joint connector (CAN3).

NO : Check the ABS-ECU connector <vehicles without ASC> or ASC-ECU connector <vehicles with ASC>, and repair if necessary. If the ABS-ECU connector <vehicles without ASC> or ASC-ECU connector <vehicles with ASC> is in good condition, replace the ABS-ECU <vehicles without ASC> or ASC-ECU <vehicles with ASC>.

www.cargeek.ir

www.CarGeek.ir

STEP 15. M.U.T.-III CAN bus diagnostics (checking the A/T-ECU <A/T> or CVT-ECU <CVT> for internal short to earth)

⚠ CAUTION

Strictly observe the specified wiring harness repair procedure. For details refer to .

Disconnect C-32 A/T-ECU connector <A/T> or C-35 CVT-ECU connector <CVT>, and diagnose the CAN bus line.

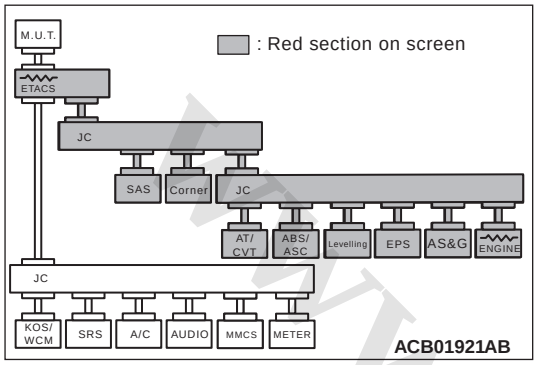

OK: The display of the M.U.T.-III is as shown in the figure.

Q: Does M.U.T.-III screen correspond to the illustration?

YES : Repair the wiring harness between C-32 A/T-ECU connector <A/T> or C-35 CVT-ECU connector <CVT> and C-124 joint connector (CAN3).

NO : Check the A/T-ECU connector <A/T> or CVT-ECU connector <CVT>, and repair if necessary. If the A/T-ECU connector <A/T> or CVT-ECU connector <CVT> is in good condition, replace the A/T-ECU connector <A/T> or CVT-ECU connector <CVT>.

STEP 16. M.U.T.-III CAN bus diagnostics (checking the electric power steering-ECU for internal short to earth)

⚠ CAUTION

Strictly observe the specified wiring harness repair procedure. For details refer to .

Disconnect C-114 electric power steering-ECU connector, and diagnose the CAN bus line.

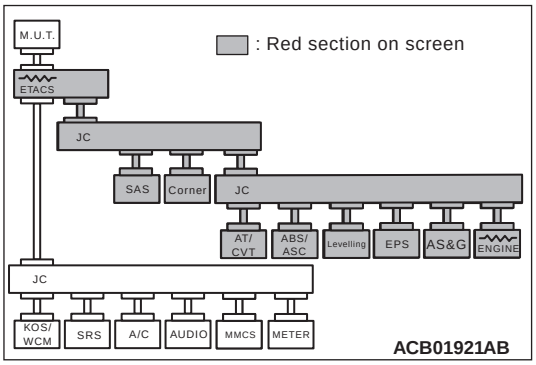

OK: The display of the M.U.T.-III is as shown in the figure.

Q: Does M.U.T.-III screen correspond to the illustration?

YES : Repair the wiring harness between C-114 electric power steering-ECU connector and C-124 joint connector (CAN3).

NO : Check the electric power steering-ECU connector, and repair if necessary. If the electric power steering-ECU connector is in good condition, replace the electric power steering-ECU.

www.cargeek.ir

www.CarGeek.ir

STEP 17. M.U.T.-III CAN bus diagnostics (checking the AS&G-ECU for internal short to earth)

⚠ CAUTION

Strictly observe the specified wiring harness repair procedure. For details refer to .

Disconnect C-64 AS&G-ECU connector, and diagnose the CAN bus line.

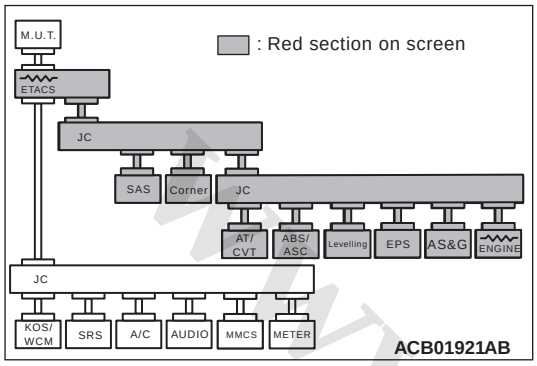

OK: The display of the M.U.T.-III is as shown in the figure.

Q: Does M.U.T.-III screen correspond to the illustration?

YES : Repair the wiring harness between C-64 AS&G-ECU connector and C-124 joint connector (CAN3).

NO : Check the AS&G-ECU connector, and repair if necessary. If the C-64 AS&G-ECU connector is in good condition, replace the AS&G-ECU.

STEP 18. M.U.T.-III CAN bus diagnostics (checking the engine-ECU for internal short to earth)

⚠ CAUTION

Strictly observe the specified wiring harness repair procedure. For details refer to .

Disconnect B-09 <Petrol> or B-40 <Diesel> engine-ECU connector, and diagnose the CAN bus line.

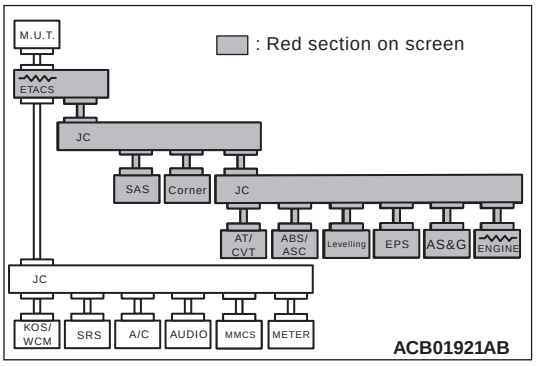

OK: The display of the M.U.T.-III is as shown in the figure.

Q: Does M.U.T.-III screen correspond to the illustration?

YES : Repair the wiring harness between B-09 <Petrol> or B-40 <Diesel> engine-ECU connector and C-124 joint connector (CAN3).

NO : Check the engine-ECU connector, and repair if necessary. If the engine-ECU connector is in good condition, replace the engine-ECU.

www.cargeek.ir

www.CarGeek.ir

Diagnosis Item 5: Diagnose shorts in the power supply to CAN-C bus line

⚠ CAUTION

When servicing a CAN bus line, earth yourself by touching a metal object such as an unpainted water pipe. If you fail to do, a component connected to the CAN bus line may be broken.

www.cargeek.ir

www.cargeek.ir

www.CarGeek.ir

CAN-C Communication Circuit <Except for RALLIART>

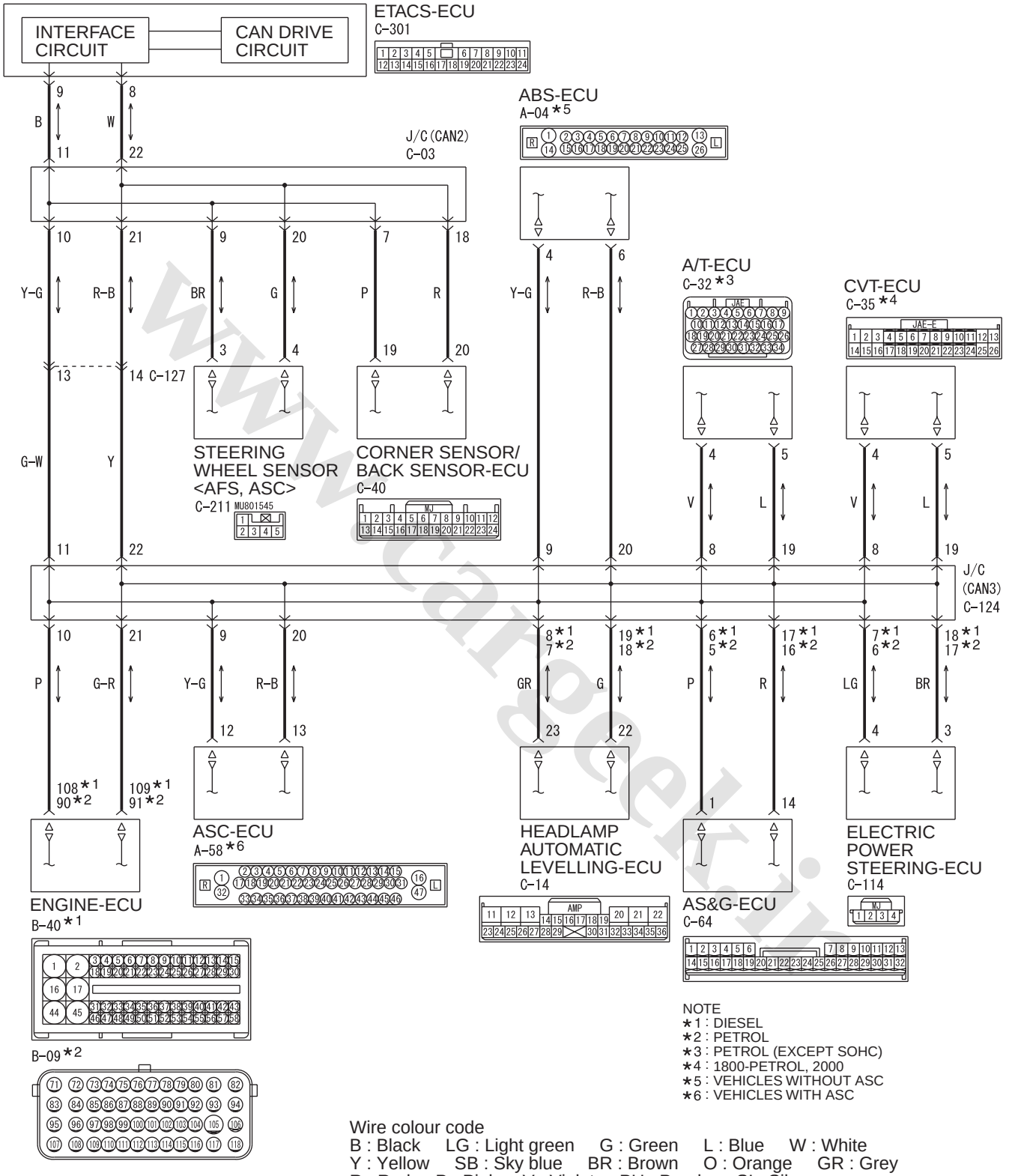

NOTE
*1 : DIESEL
*2 : PETROL
*3 : PETROL (EXCEPT SOHC)
*4 : 1800-PETROL, 2000
*5 : VEHICLES WITHOUT ASC
*6 : VEHICLES WITH ASC

Wire colour code
B : Black LG : Light green G : Green L : Blue W : White
Y : Yellow SB : Sky blue BR : Brown O : Orange GR : Grey
R : Red P : Pink V : Violet PU : Purple SI : Silver

WDH54E015A

www.cargeek.ir

www.CarGeek.ir

Connectors: A-04, A-58 <LHD>

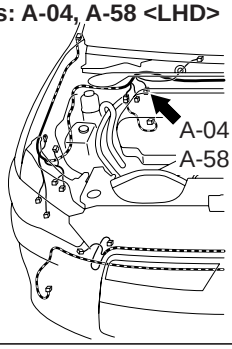

AC801250AB

Connectors: C-14, C-64, C-114 <LHD>

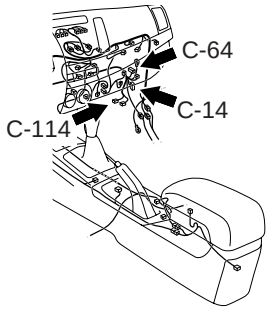

ACB02646AD

Connector: A-58 <RHD>

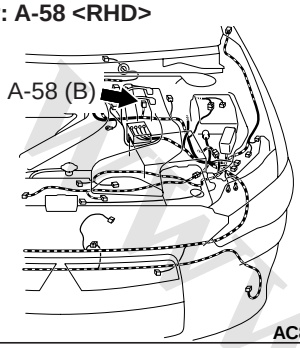

AC801253AG

Connectors: C-14, C-64, C-124 <RHD>

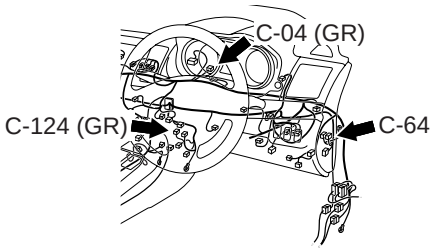

ACB02647AD

Connectors: B-09, B-40

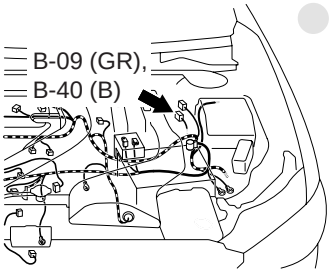

AC800715BC

Connector: C-211 <LHD>

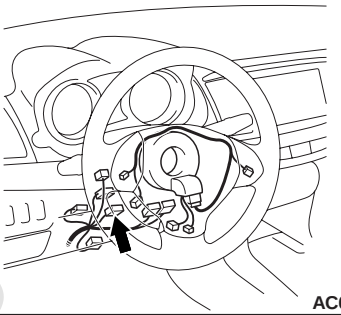

AC612708AW

Connectors: C-03, C-35, C-40, C-124, C-127 <LHD>

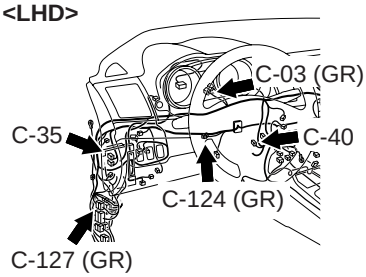

ACB02645AE

Connectors: C-211 <RHD>

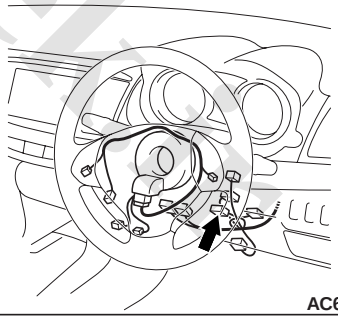

AC612716AX

Connectors: C-03, C-35, C-114, C-127 <RHD>

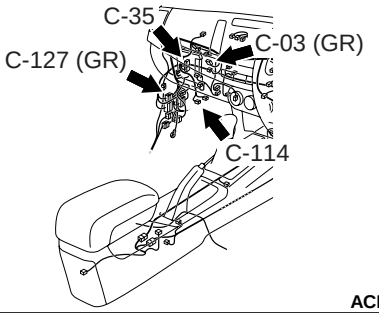

ACB02648AD

Connector: C-301 <LHD>

ETACS-ECU

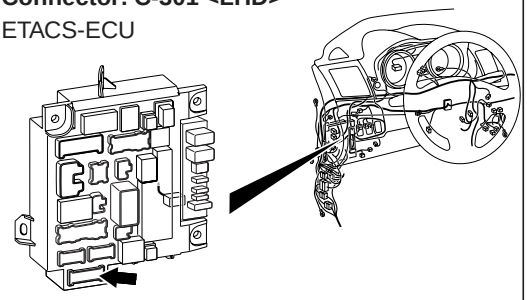

ACA00886BE

www.cargeek.ir

www.CarGeek.ir

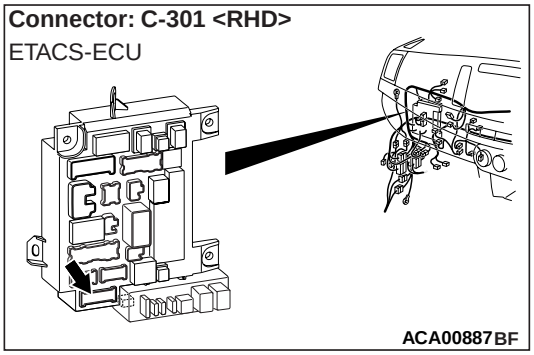

FUNCTION
If a short to power supply is present in the CAN-C lines, this diagnosis result will be set.

TROUBLE JUDGEMENT CONDITIONS
If diagnosis code U1121 is set, the ETACS-ECU determines that there is a failure.

TROUBLESHOOTING HINTS
- Malfunction of the connector (short to power supply in connector)
- Malfunction of the wiring harness (short to power supply in the CAN-C main or sub bus lines)
- Malfunction of the ECU (ETACS-ECU, or ECUs on CAN-C lines failed)

DIAGNOSIS PROCEDURE

STEP 1. Check the wiring harness between C-301 ETACS-ECU connector and C-03 joint connector (CAN2) for short to power supply (voltage measurement).

⚠ CAUTION
- **A digital multimeter should be used. For details refer to .**
- **The test wiring harness should be used. For details refer to .**

(1) Disconnect joint connector (CAN2), and measure at the wiring harness side.
(2) Turn the ignition switch to the ON position.
(3) Measure the voltage between C-03 joint connector (CAN2) terminal No.11 and body earth.

OK: 4.7 V or less

(4) Measure the voltage between C-03 joint connector (CAN2) terminal No.22 and body earth.

OK: 4.7 V or less

Q: Is the check result normal?

YES <vehicles with ASC or AFS> : Go to Step 2.
YES <vehicles without ASC and without AFS with reversing sensor system> : Go to Step 3.
YES <vehicles without ASC and without AFS without reversing sensor system> : Go to Step 4.
NO : Go to Step 12.

STEP 2. Check the wiring harness between C-211 steering wheel sensor connector and C-03 joint connector (CAN2) for short to power supply (voltage measurement).

⚠ CAUTION
- **A digital multimeter should be used. For details refer to .**
- **The test wiring harness should be used. For details refer to .**

(1) Disconnect joint connector (CAN2), and measure at the wiring harness side.
(2) Turn the ignition switch to the ON position.
(3) Measure the voltage between C-03 joint connector (CAN2) terminal No.9 and body earth.

OK: 4.7 V or less

(4) Measure the voltage between C-03 joint connector (CAN2) terminal No.20 and body earth.

OK: 4.7 V or less

Q: Is the check result normal?

YES <vehicles with reversing sensor system> : Go to Step 3.
YES <vehicles without reversing sensor system> : Go to Step 4.
NO : Go to Step 10.

STEP 3. Check the wiring harness between C-40 corner sensor/back sensor-ECU connector and C-03 joint connector (CAN2) for short to power supply (voltage measurement).

⚠ CAUTION
- **A digital multimeter should be used. For details refer to .**
- **The test wiring harness should be used. For details refer to .**

(1) Disconnect joint connector (CAN2), and measure at the wiring harness side.
(2) Turn the ignition switch to the ON position.
(3) Measure the voltage between C-03 joint connector (CAN2) terminal No.7 and body earth.

OK: 4.7 V or less

(4) Measure the voltage between C-06 joint connector (CAN2) terminal No.18 and body

www.cargeek.ir

www.CarGeek.ir

earth.

OK: 4.7 V or less

Q: Is the check result normal?
YES <vehicles with AFS> : Go to Step 4.
YES <vehicles without AFS> : Go to Step 5.
NO : Go to Step 11.

STEP 4. Check the wiring harness between C-14 headlamp automatic levelling-ECU connector and C-124 joint connector (CAN3) for short to power supply (voltage measurement).

⚠ CAUTION
- **A digital multimeter should be used. For details refer to .**
- **The test wiring harness should be used. For details refer to .**

(1) Disconnect joint connector (CAN3), and measure at the wiring harness side.
(2) Turn the ignition switch to the ON position.
(3) Measure the voltage between C-124 joint connector (CAN3) terminal No.7 <Petrol> or 8 <Diesel> and body earth.

OK: 4.7 V or less

(4) Measure the voltage between C-124 joint connector (CAN3) terminal No.18 <Petrol> or 19 <Diesel> and body earth.

OK: 4.7 V or less

Q: Is the check result normal?
YES : Go to Step 5.
NO : Go to Step 13.

STEP 5. Check the wiring harness between A-04 ABS-ECU connector <vehicles without ASC> or A-58 ASC-ECU connector <vehicles with ASC> and C-124 joint connector (CAN3) for short to power supply (voltage measurement).

⚠ CAUTION
- **A digital multimeter should be used. For details refer to .**
- **The test wiring harness should be used. For details refer to .**

(1) Disconnect joint connector (CAN3), and measure at the wiring harness side.
(2) Turn the ignition switch to the ON position.
(3) Measure the voltage between C-124 joint connector (CAN3) terminal No.9 and body earth.

OK: 4.7 V or less

(4) Measure the voltage between C-124 joint connector (CAN3) terminal No.20 and body earth.

OK: 4.7 V or less

Q: Is the check result normal?
YES <A/T or CVT> : Go to Step 6.
YES <M/T (vehicles with electric power steering) > : Go to Step 7.
YES <M/T (vehicles without electric power steering and with automatic stop & go (AS&G) system)> : Go to Step 8.
YES <M/T (vehicles without electric power steering and without automatic stop & go (AS&G) system)> : Go to Step 9.
NO : Go to Step 14.

STEP 6. Check the wiring harness between C-32 A/T-ECU connector <A/T> or C-35 CVT-ECU connector <CVT> and C-124 joint connector (CAN3) for short to power supply (voltage measurement).

⚠ CAUTION
- **A digital multimeter should be used. For details refer to .**
- **The test wiring harness should be used. For details refer to .**

(1) Disconnect joint connector (CAN3), and measure at the wiring harness side.
(2) Turn the ignition switch to the ON position.
(3) Measure the voltage between C-124 joint connector (CAN3) terminal No.8 and body earth.

OK: 4.7 V or less

(4) Measure the voltage between C-124 joint connector (CAN3) terminal No.19 and body earth.

OK: 4.7 V or less

Q: Is the check result normal?
YES <vehicles with electric power steering> : Go to Step 7.
YES <vehicles without electric power steering and with automatic stop & go (AS&G) system> : Go to Step 8.
YES <vehicles without electric power steering and without automatic stop & go (AS&G) system> : Go to Step 9.
NO : Go to Step 15.

www.cargeek.ir

www.CarGeek.ir

STEP 7. Check the wiring harness between C-114 electric power steering-ECU connector and C-124 joint connector (CAN3) for short to power supply (voltage measurement).

⚠ CAUTION

- **A digital multimeter should be used. For details refer to .**
- **The test wiring harness should be used. For details refer to .**

(1) Disconnect joint connector (CAN3), and measure at the wiring harness side.
(2) Turn the ignition switch to the ON position.
(3) Measure the voltage between C-124 joint connector (CAN3) terminal No.6 <Petrol> or 7 <Diesel> and body earth.

OK: 4.7 V or less

(4) Measure the voltage between C-124 joint connector (CAN3) terminal No.17 <Petrol> or 18 <Diesel> and body earth.

OK: 4.7 V or less

Q: Is the check result normal?
YES <vehicles with automatic stop & go (AS&G) system> : Go to Step 8.
YES <vehicles without automatic stop & go (AS&G) system> : Go to Step 9.
NO : Go to Step 16.

STEP 8. Check the wiring harness between C-64 AS&G-ECU connector and C-124 joint connector (CAN3) for short to power supply (voltage measurement).

⚠ CAUTION

- **A digital multimeter should be used. For details refer to .**
- **The test wiring harness should be used. For details refer to .**

(1) Disconnect joint connector (CAN3), and measure at the wiring harness side.
(2) Turn the ignition switch to the ON position.
(3) Measure the voltage between C-124 joint connector (CAN3) terminal No.16 <Petrol> or 17 <Diesel> and body earth

OK: 4.7 V or less

(4) Measure the voltage between C-124 joint connector (CAN3) terminal No.5 <Petrol> or 6 <Diesel> and body earth

OK: 4.7 V or less

Q: Is the check result normal?
YES : Go to Step 9.
NO : Go to Step 17.

STEP 9. Check the wiring harness between B-09 <Petrol> or B-40 <Diesel> engine-ECU connector and C-124 joint connector (CAN3) for short to power supply (voltage measurement).

⚠ CAUTION

- **A digital multimeter should be used. For details refer to .**
- **The test wiring harness should be used. For details refer to .**

(1) Disconnect joint connector (CAN3), and measure at the wiring harness side.
(2) Turn the ignition switch to the ON position.
(3) Measure the voltage between C-124 joint connector (CAN3) terminal No.10 and body earth.

OK: 4.7 V or less

(4) Measure the voltage between C-124 joint connector (CAN3) terminal No.21 and body earth.

OK: 4.7 V or less

Q: Is the check result normal?
YES : Check C-127 intermediate connector, and repair if necessary. If the intermediate connector is in good condition, repair the wiring harness between C-03 joint connector (CAN2) and C-124 joint connector (CAN3).
NO : Go to Step 18.

www.cargeek.ir

www.CarGeek.ir

STEP 10. M.U.T.-III CAN bus diagnostics (checking the steering wheel sensor for internal short to earth)

⚠ CAUTION

Strictly observe the specified wiring harness repair procedure. For details refer to .

Disconnect C-211 steering wheel sensor connector, and diagnose the CAN bus line.

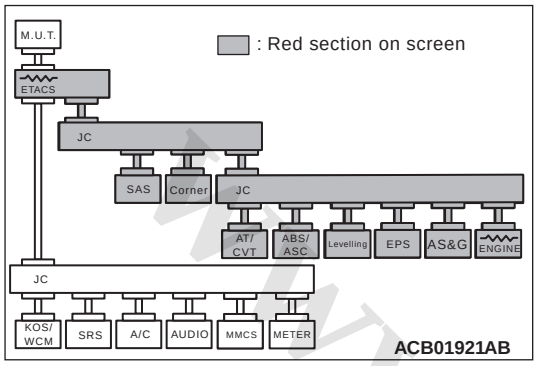

OK: The display of the M.U.T.-III is as shown in the figure.

Q: Does M.U.T.-III screen correspond to the illustration?

YES : Repair the wiring harness between C-211 steering wheel sensor connector and C-03 joint connector (CAN2).

NO : Check the steering wheel sensor connector, and repair if necessary. If the steering wheel sensor connector is in good condition, replace the steering wheel sensor.

STEP 11. M.U.T.-III CAN bus diagnostics (checking the corner sensor/back sensor-ECU for internal short to earth)

⚠ CAUTION

Strictly observe the specified wiring harness repair procedure. For details refer to .

Disconnect C-40 corner sensor/back sensor-ECU connector, and diagnose the CAN bus line.

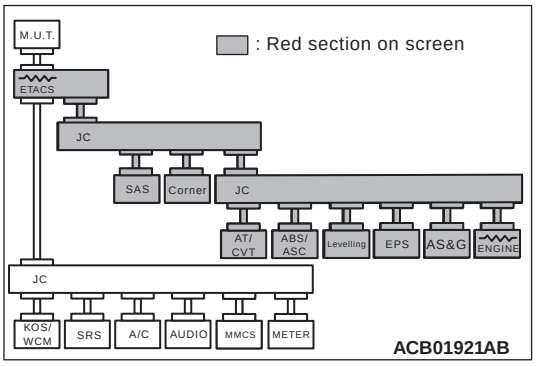

OK: The display of the M.U.T.-III is as shown in the figure.

Q: Does M.U.T.-III screen correspond to the illustration?

YES : Repair the wiring harness between C-40 corner sensor/back sensor-ECU connector and C-03 joint connector (CAN2).

NO : Check the corner sensor/back sensor-ECU connector, and repair if necessary. If the corner sensor/back sensor-ECU connector is in good condition, replace the corner sensor/back sensor-ECU.

STEP 12. Check the wiring harness between C-301 ETACS-ECU connector and C-03 joint connector (CAN2) for short to power supply (voltage measurement).

⚠ CAUTION

- **Disconnect the negative battery terminal. For details refer to .**
- **A digital multimeter should be used. For details refer to .**
- **The test wiring harness should be used. For details refer to .**
- **Strictly observe the specified wiring harness repair procedure. For details refer to .**

(1) Disconnect ETACS-ECU connector and joint connector (CAN2), and measure at the wiring harness side.
(2) Turn the ignition switch to the ON position.
(3) Measure the voltage between C-03 joint connector (CAN2) terminal No.11 and body earth.

www.cargeek.ir

www.CarGeek.ir

<CAN_H>

OK: 1 V or less

(4) Measure the voltage between C-03 joint connector (CAN2) terminal No.22 and body earth. <CAN_L>

OK: 1 V or less

Q: Is the check result normal?

YES : Check the ETACS-ECU connector, and repair if necessary. If the ETACS-ECU connector is in good condition, replace the ETACS-ECU.

NO : Repair the wiring harness between C-301 ETACS-ECU connector and C-03 joint connector (CAN2).

STEP 13. M.U.T.-III CAN bus diagnostics (checking the headlamp automatic levelling-ECU for internal short to earth)

⚠ CAUTION

Strictly observe the specified wiring harness repair procedure. For details refer to .

Disconnect C-14 headlamp automatic levelling-ECU connector, and diagnose the CAN bus line.

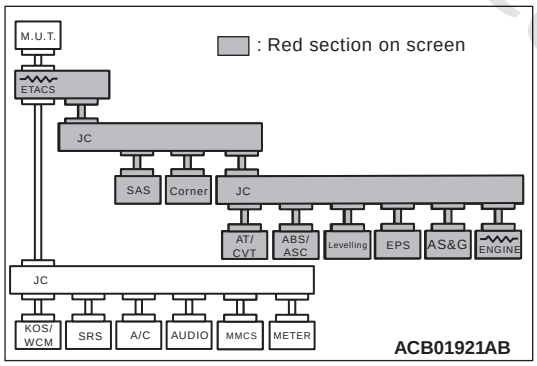

OK: The display of the M.U.T.-III is as shown in the figure.

Q: Does M.U.T.-III screen correspond to the illustration?

YES : Repair the wiring harness between C-14 headlamp automatic levelling-ECU connector and C-124 joint connector (CAN3).

NO : Check the C-14 headlamp automatic levelling-ECU connector, and repair if necessary. If the C-14 headlamp automatic levelling-ECU connector is in good condition, replace the C-14 headlamp automatic levelling-ECU.

STEP 14. M.U.T.-III CAN bus diagnostics (checking the ABS-ECU <vehicles without ASC> or ASC-ECU <vehicles with ASC> for internal short to earth)

⚠ CAUTION

Strictly observe the specified wiring harness repair procedure. For details refer to .

Disconnect A-04 ABS-ECU connector <vehicles without ASC> or A-58 ASC-ECU connector <vehicles with ASC>, and diagnose the CAN bus line.

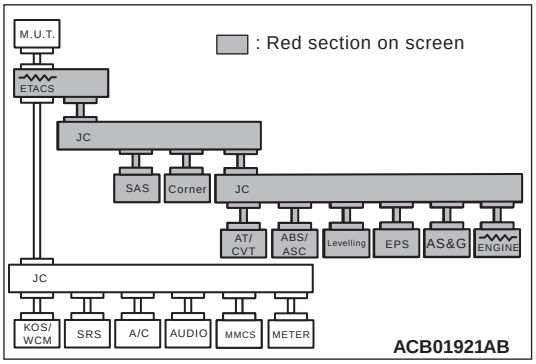

OK: The display of the M.U.T.-III is as shown in the figure.

Q: Does M.U.T.-III screen correspond to the illustration?

YES : Repair the wiring harness between A-04 ABS-ECU connector <vehicles without ASC> or A-58 ASC-ECU connector <vehicles with ASC> and C-124 joint connector (CAN3).

NO : Check the ABS-ECU connector <vehicles without ASC> or ASC-ECU connector <vehicles with ASC>, and repair if necessary. If the ABS-ECU connector <vehicles without ASC> or ASC-ECU connector <vehicles with ASC> is in good condition, replace the ABS-ECU <vehicles without ASC> or ASC-ECU <vehicles with ASC>.

www.cargeek.ir

www.CarGeek.ir

STEP 15. M.U.T.-III CAN bus diagnostics (checking the A/T-ECU <A/T> or CVT-ECU <CVT> for internal short to earth)

⚠ CAUTION

Strictly observe the specified wiring harness repair procedure. For details refer to .

Disconnect C-32 A/T-ECU connector <A/T> or C-35 CVT-ECU connector <CVT>, and diagnose the CAN bus line.

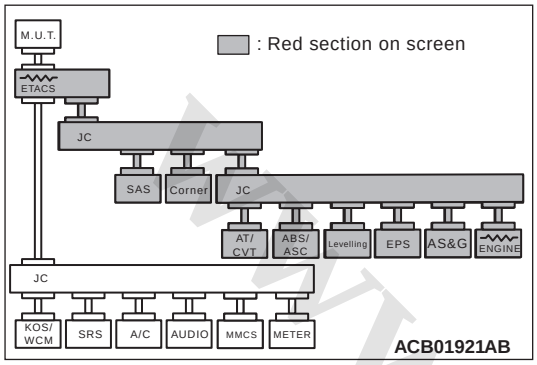

OK: The display of the M.U.T.-III is as shown in the figure.

Q: Does M.U.T.-III screen correspond to the illustration?

YES : Repair the wiring harness between C-32 A/T-ECU connector <A/T> or C-35 CVT-ECU connector <CVT> and C-124 joint connector (CAN3).

NO : Check the A/T-ECU connector <A/T> or CVT-ECU connector <CVT>, and repair if necessary. If the A/T-ECU connector <A/T> or CVT-ECU connector <CVT> is in good condition, replace the A/T-ECU <A/T> or CVT-ECU <CVT>.

STEP 16. M.U.T.-III CAN bus diagnostics (checking the electric power steering-ECU> for internal short to earth)

⚠ CAUTION

Strictly observe the specified wiring harness repair procedure. For details refer to .

Disconnect C-114 electric power steering-ECU connector, and diagnose the CAN bus line.

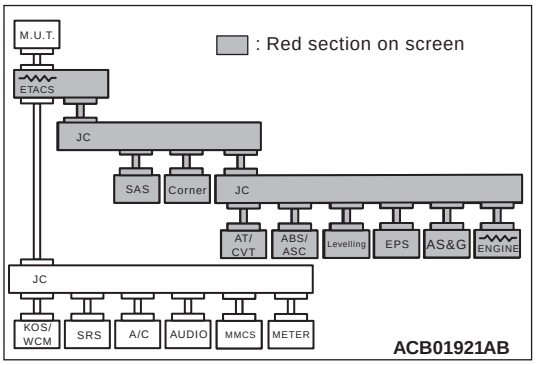

OK: The display of the M.U.T.-III is as shown in the figure.

Q: Does M.U.T.-III screen correspond to the illustration?

YES : Repair the wiring harness between C-114 electric power steering-ECU connector and C-124 joint connector (CAN3).

NO : Check the electric power steering-ECU connector, and repair if necessary. If the electric power steering-ECU connector is in good condition, replace the electric power steering-ECU.

www.cargeek.ir

www.CarGeek.ir

STEP 17. M.U.T.-III CAN bus diagnostics (checking the AS&G-ECU for internal short to earth)

⚠ CAUTION

Strictly observe the specified wiring harness repair procedure. For details refer to .

Disconnect C-64 AS&G-ECU connector, and diagnose the CAN bus line.

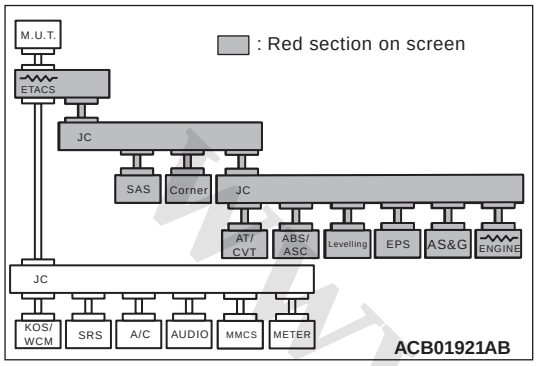

OK: The display of the M.U.T.-III is as shown in the figure.

Q: Does M.U.T.-III screen correspond to the illustration?

YES : Repair the wiring harness between C-64 AS&G-ECU connector and C-124 joint connector (CAN3).

NO : Check the transmission assembly connector, and repair if necessary. If the AS&G-ECU connector is in good condition, replace the AS&G-ECU.

STEP 18. M.U.T.-III CAN bus diagnostics (checking the engine-ECU for internal short to earth)

⚠ CAUTION

Strictly observe the specified wiring harness repair procedure. For details refer to .

Disconnect B-09 <Petrol> or B-40 <Diesel> engine-ECU connector, and diagnose the CAN bus line.

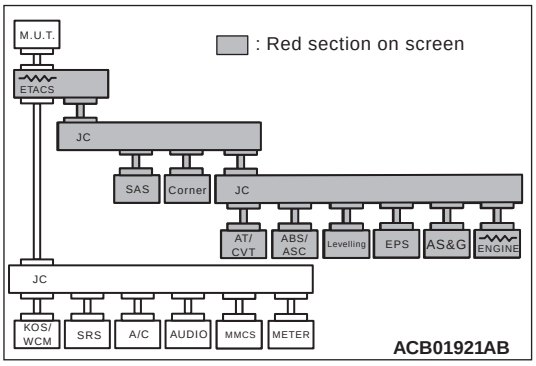

OK: The display of the M.U.T.-III is as shown in the figure.

Q: Does M.U.T.-III screen correspond to the illustration?

YES : Repair the wiring harness between B-09 <Petrol> or B-40 <Diesel> engine-ECU connector and C-124 joint connector (CAN3).

NO : Check the engine-ECU connector, and repair if necessary. If the engine-ECU connector is in good condition, replace the engine-ECU.

www.cargeek.ir

www.CarGeek.ir

Diagnosis Item 6: Diagnose when the M.U.T.-III cannot receive the data sent by steering wheel sensor <vehicles with ASC or AFS>

⚠ CAUTION

When servicing a CAN bus line, earth yourself by touching a metal object such as an unpainted water pipe. If you fail to do, a component connected to the CAN bus line may be broken.

www.cargeek.ir

www.cargeek.ir

www.CarGeek.ir

CAN-C Communication Circuit <Except for RALLIART>

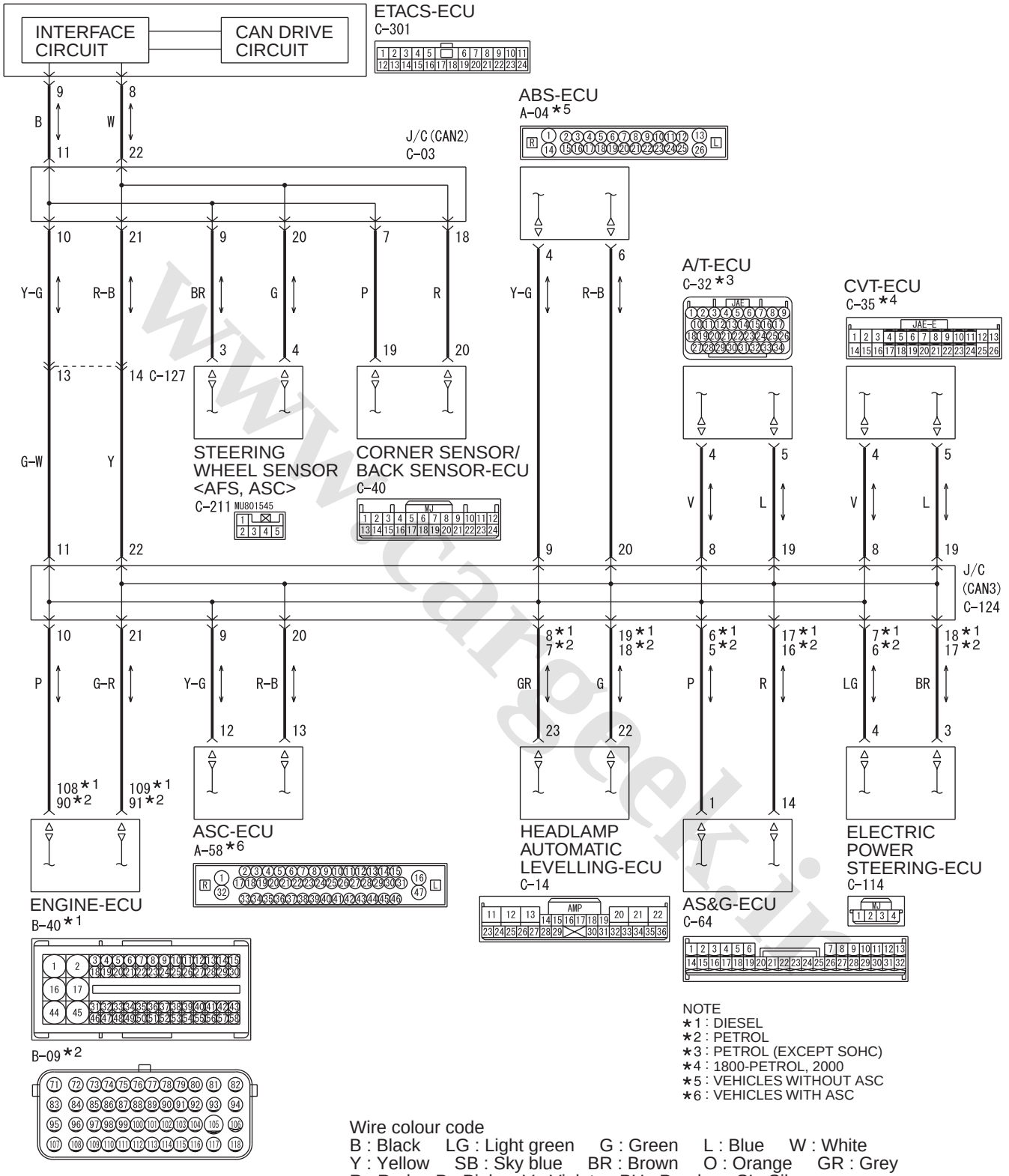

www.cargeek.ir

www.CarGeek.ir

Connector: C-03 <LHD>

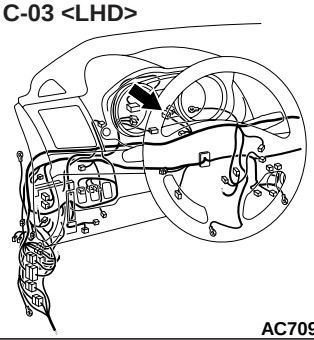

AC709893 AM

Connector: C-03 <RHD>

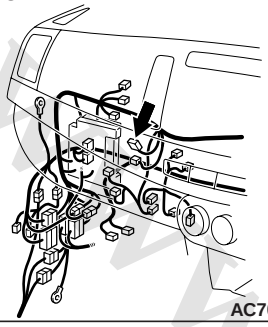

AC701121BP

Connector: C-211 <LHD>

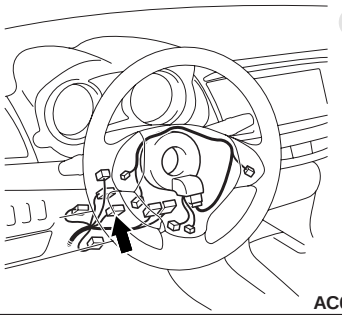

AC612708 AW

Connectors: C-211 <RHD>

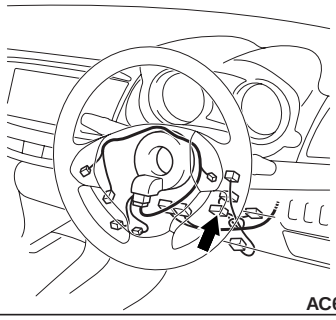

AC612716 AX

FUNCTION

If the M.U.T.-III cannot communicate with the steering wheel sensor, this diagnosis result will be set.

TROUBLE JUDGEMENT CONDITIONS

If a communication flag is not set for the steering wheel sensor, the ETACS-ECU determines that there is a failure.

TROUBLESHOOTING HINTS

- Malfunction of the connector [joint connector (CAN2) or steering wheel sensor connector improperly connected]
- Malfunction of the wiring harness [open circuit between the steering wheel sensor and the joint connector (CAN2), power supply circuit to the steering wheel sensor]
- Faulty steering wheel sensor

DIAGNOSIS PROCEDURE

STEP 1. Connector check: C-03 joint connector (CAN2) and C-211 steering wheel sensor connector

⚠ CAUTION

The strand end of the twist wire should be within 10 cm from the connector. For details refer to .

Q: Is the check result normal?

YES : Go to Step 2.

NO : Repair the defective connector.

STEP 2. Check the wiring harness between C-211 steering wheel sensor connector and C-03 joint connector (CAN2)

⚠ CAUTION

Strictly observe the specified wiring harness repair procedure. For details refer to .

Disconnect steering wheel sensor connector and joint connector (CAN2), and check the following wiring harness for open circuit.

(1) The wiring harness between C-211 steering wheel sensor connector terminal No.3 and C-03 joint connector (CAN2) terminal No.9 <CAN_H>

OK: Continuity exists (2 Ω or less)

(2) The wiring harness between C-211 steering wheel sensor connector terminal No.4 and C-03 joint connector (CAN2) terminal No.20 <CAN_L>

OK: Continuity exists (2 Ω or less)

Q: Is the check result normal?

YES : Check the power supply circuit of the steering wheel sensor. Refer to GROUP 35C – Troubleshooting .

NO : Repair the wiring harness.

www.cargeek.ir

www.CarGeek.ir

Diagnosis Item 7: Diagnose when the M.U.T.-III cannot receive the data sent by corner sensor/back sensor-ECU <Vehicles with reversing sensor system>

⚠ CAUTION

When servicing a CAN bus line, earth yourself by touching a metal object such as an unpainted water pipe. If you fail to do, a component connected to the CAN bus line may be broken.

www.cargeek.ir

www.cargeek.ir

www.CarGeek.ir

CAN-C Communication Circuit <Except for RALLIART>

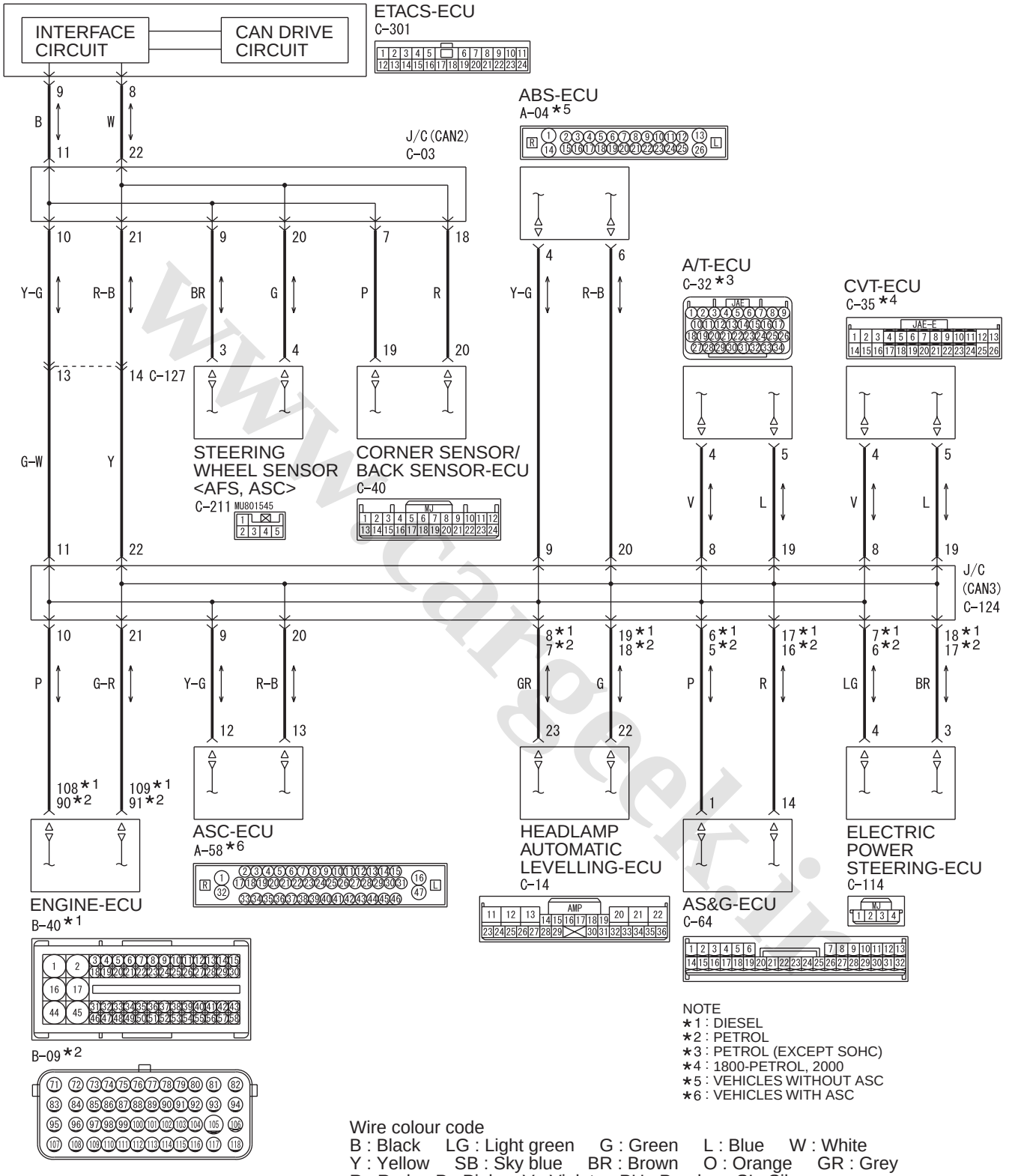

www.cargeek.ir

www.CarGeek.ir

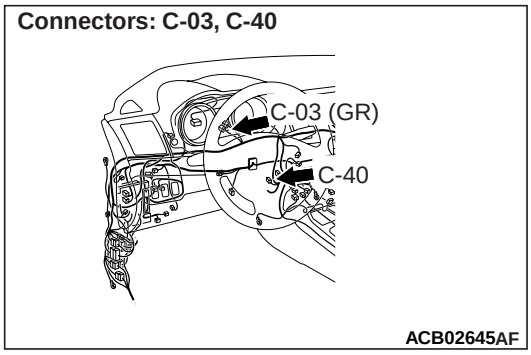

FUNCTION

If the M.U.T.-III cannot communicate with the corner sensor/back sensor-ECU, this diagnosis result will be set.

TROUBLE JUDGEMENT CONDITIONS

If a communication flag is not set for the corner sensor/back sensor-ECU, the ETACS-ECU determines that there is a failure.

TROUBLESHOOTING HINTS

- Malfunction of the connector [joint connector (CAN2) or corner sensor/back sensor-ECU connector improperly connected]
- Malfunction of the wiring harness [open circuit between the corner sensor/back sensor-ECU and the joint connector (CAN2), power supply circuit to the corner sensor/back sensor-ECU]
- Malfunction of the corner sensor/back sensor-ECU

DIAGNOSIS PROCEDURE

STEP 1. Connector check: C-40 corner sensor/back sensor-ECU connector and C-03 joint connector (CAN2)

⚠ CAUTION

The strand end of the twist wire should be within 10 cm from the connector. For details refer to .

Q: Is the check result normal?

YES : Go to Step 2.

NO : Repair the defective connector.

STEP 2. Check the wiring harness between C-40 corner sensor/back sensor-ECU connector and C-03 joint connector (CAN2)

⚠ CAUTION

Strictly observe the specified wiring harness repair procedure. For details refer to .

Disconnect corner sensor/back sensor-ECU connector and joint connector (CAN2), and check the following wiring harness.

(1) Check that there is continuity between C-40 corner sensor/back sensor-ECU connector terminal No.19 and C-03 joint connector (CAN2) terminal No.7 <CAN_H>

OK: Continuity exists (2 Ω or less)

(2) Check that there is continuity between C-40 corner sensor/back sensor-ECU connector terminal No.20 and C-03 joint connector (CAN2) terminal No.18 <CAN_L>

OK: Continuity exists (2 Ω or less)

Q: Is the check result normal?

YES : Check the power supply circuit of the corner sensor/back sensor-ECU. Refer to Group 54A – Troubleshooting .

NO : Repair the wiring harness.

www.cargeek.ir

www.CarGeek.ir

Diagnosis Item 8: Diagnose when the M.U.T.-III cannot receive the data sent by ABS-ECU <vehicles without ASC> or ASC-ECU <vehicles with ASC>

⚠ CAUTION

When servicing a CAN bus line, earth yourself by touching a metal object such as an unpainted water pipe. If you fail to do, a component connected to the CAN bus line may be broken.

www.cargeek.ir

www.cargeek.ir

www.CarGeek.ir

CAN-C Communication Circuit <Except for RALLIART>

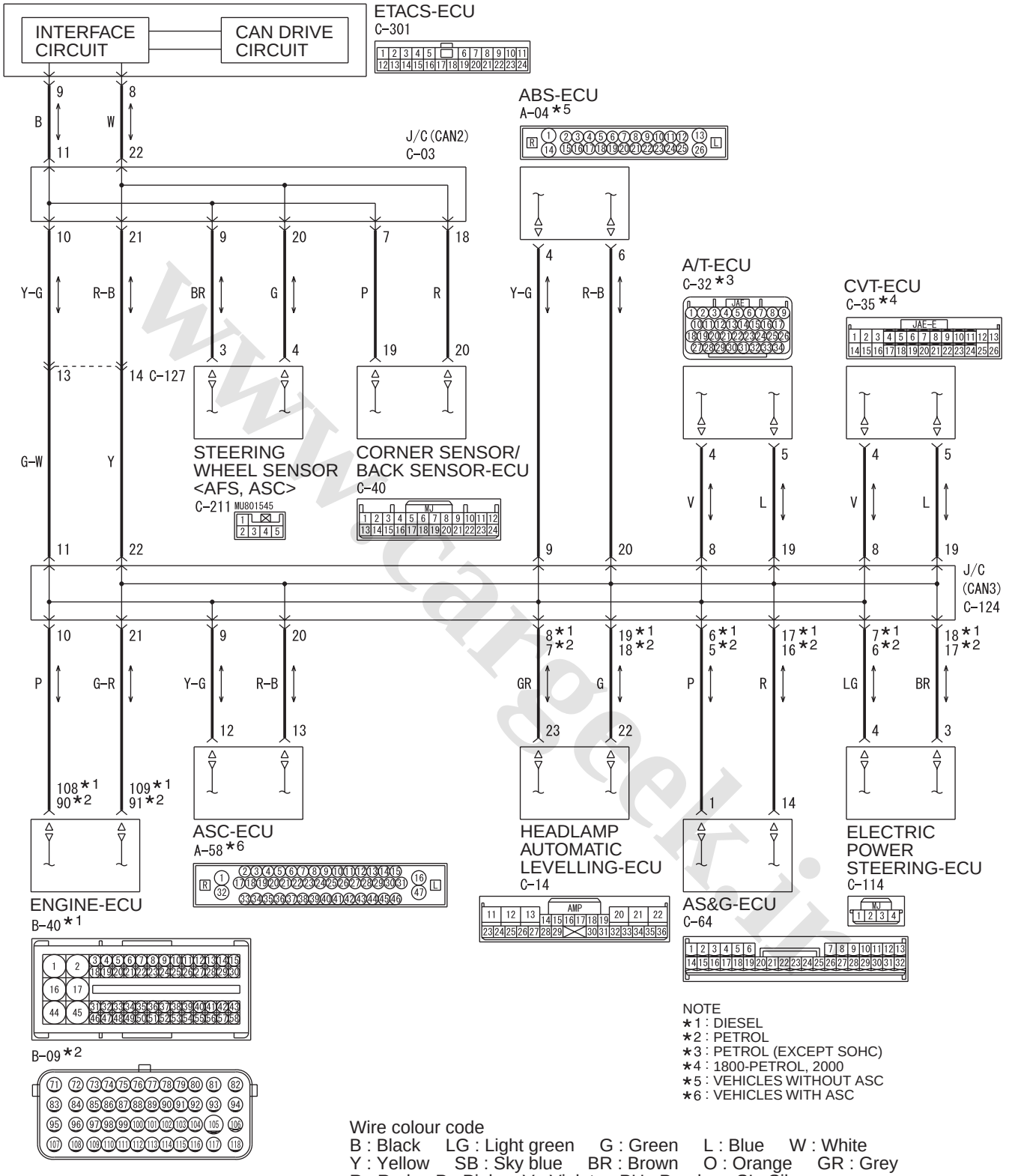

NOTE
*1 : DIESEL
*2 : PETROL
*3 : PETROL (EXCEPT SOHC)
*4 : 1800-PETROL, 2000
*5 : VEHICLES WITHOUT ASC
*6 : VEHICLES WITH ASC

Wire colour code
B : Black LG : Light green G : Green L : Blue W : White
Y : Yellow SB : Sky blue BR : Brown O : Orange GR : Grey
R : Red P : Pink V : Violet PU : Purple SI : Silver

WDH54E015A

www.cargeek.ir

www.CarGeek.ir

Connectors: A-04, A-58 <LHD>

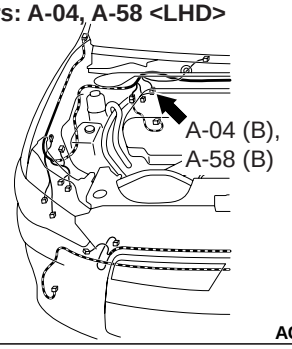

AC801250AB

Connector: A-58 <RHD>

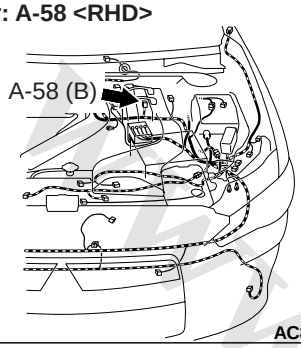

AC801253AG

Connector: C-124 <LHD>

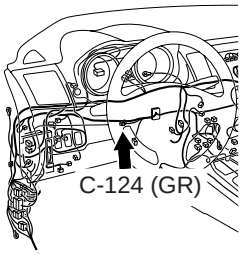

ACB02645AH

Connector: C-124 <RHD>

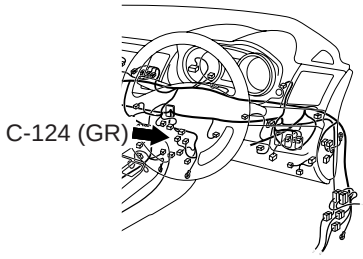

ACB02647AE

FUNCTION

If the M.U.T.-III cannot communicate with the ABS-ECU <vehicles without ASC> or ASC-ECU <vehicles with ASC>, this diagnosis result will be set.

TROUBLE JUDGEMENT CONDITIONS

If a communication flag is not set for the ABS-ECU <vehicles without ASC> or ASC-ECU <vehicles with ASC>, the ETACS-ECU determines that there is a failure.

TROUBLESHOOTING HINTS

- Malfunction of the connector [joint connector (CAN3) or ABS-ECU connector <vehicles without ASC> or ASC-ECU connector <vehicles with ASC> improperly connected]
- Malfunction of the wiring harness [open circuit between the ABS-ECU <vehicles without ASC> or ASC-ECU <vehicles with ASC> and the joint connector (CAN3), power supply circuit to the ABS-ECU <vehicles without ASC> or ASC-ECU <vehicles with ASC>]
- Malfunction of the ABS-ECU <vehicles without ASC> or ASC-ECU <vehicles with ASC>

DIAGNOSIS PROCEDURE

STEP 1. Connector check: A-04 ABS-ECU connector <vehicles without ASC> or A-58 ASC-ECU connector <vehicles with ASC> and C-124 joint connector (CAN3)

⚠ CAUTION

The strand end of the twist wire should be within 10 cm from the connector. For details refer to .

Q: Is the check result normal?

YES : Go to Step 2.

NO : Repair the defective connector.

STEP 2. Check the wiring harness between A-04 ABS-ECU connector <vehicles without ACS> or A-58 ASC-ECU connector <vehicles with ASC> and C-124 joint connector (CAN3)

⚠ CAUTION

Strictly observe the specified wiring harness repair procedure. For details refer to .

Disconnect ABS-ECU connector <vehicles without ASC> or ASC-ECU connector <vehicles with ASC> and joint connector (CAN3), and check the following wiring harness for open circuit.

(1) The wiring harness between A-04 ABS-ECU connector terminal No.4 <vehicles without ASC> or A-58 ASC-ECU connector terminal No.12 <vehicles with ASC> and C-124 joint connector (CAN3) terminal No.9 <CAN_H>

OK: Continuity exists (2 Ω or less)

(2) The wiring harness between A-04 ABS-ECU connector terminal No.6 <vehicles without ASC> or A-58 ASC-ECU connector terminal No.13 <vehicles with ASC> and C-124 joint connector (CAN3) terminal No.20 <CAN_L>

OK: Continuity exists (2 Ω or less)

Q: Is the check result normal?

www.cargeek.ir

www.CarGeek.ir

YES : Check the power supply circuit of the ABS-ECU <vehicles without ASC> or ASC-ECU <vehicles without ASC>. Refer to GROUP 35C – Troubleshooting <vehicles without ASC> or Refer to GROUP 35C – Troubleshooting <vehicles with ASC>.

NO : Repair the wiring harness.

www.cargeek.ir

www.cargeek.ir

www.CarGeek.ir

Diagnosis Item 9: Diagnose when the M.U.T.-III cannot receive the data sent by headlamp automatic levelling-ECU <vehicles with AFS>

⚠ CAUTION

When servicing a CAN bus line, earth yourself by touching a metal object such as an unpainted water pipe. If you fail to do, a component connected to the CAN bus line may be broken.

www.cargeek.ir

www.cargeek.ir

www.CarGeek.ir

CAN-C Communication Circuit <Except for RALLIART>

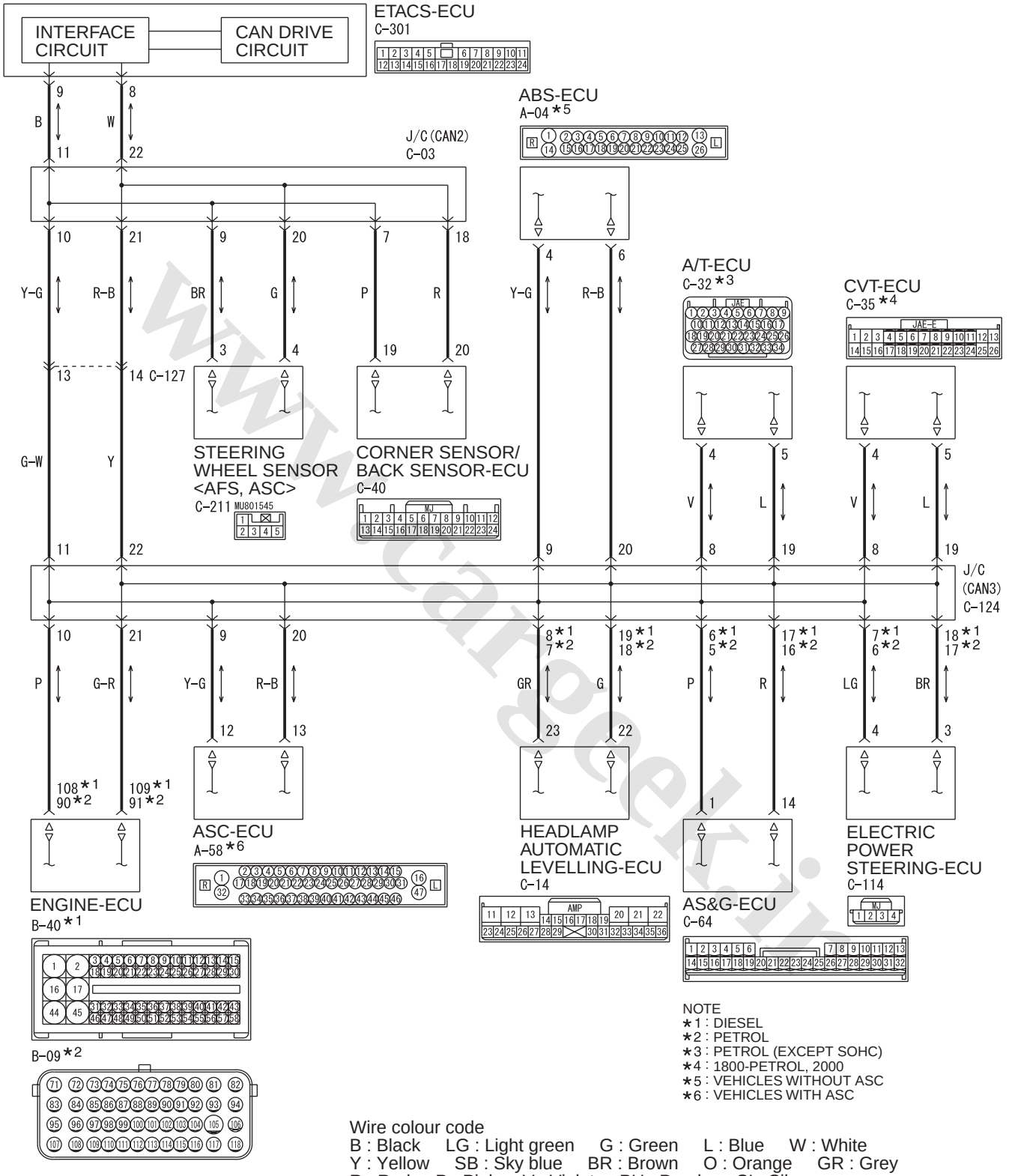

NOTE
*1 : DIESEL
*2 : PETROL
*3 : PETROL (EXCEPT SOHC)
*4 : 1800-PETROL, 2000
*5 : VEHICLES WITHOUT ASC
*6 : VEHICLES WITH ASC

Wire colour code
B : Black LG : Light green G : Green L : Blue W : White
Y : Yellow SB : Sky blue BR : Brown O : Orange GR : Grey
R : Red P : Pink V : Violet PU : Purple SI : Silver

WDH54E015A

www.cargeek.ir

www.CarGeek.ir

Connector: C-14 <LHD>

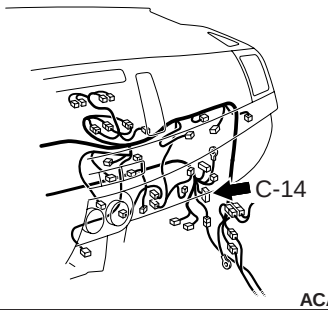

ACA00830AC

Connectors: C-14, C-124 <RHD>

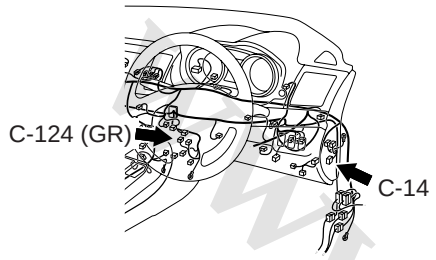

ACB02647AF

Connector: C-124 <LHD>

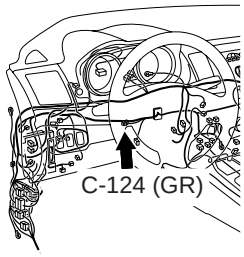

ACB02645AH

⚠ CAUTION

When servicing a CAN bus line, earth yourself by touching a metal object such as an unpainted water pipe. If you fail to do, a component connected to the CAN bus line may be broken.

FUNCTION

If the M.U.T.-III cannot communicate with the headlamp automatic levelling-ECU, this diagnosis result will be set.

TROUBLE JUDGEMENT CONDITIONS

If a communication flag is not set for the headlamp automatic levelling-ECU, the ETACS-ECU determines that there is a failure.

TROUBLESHOOTING HINTS

- Malfunction of the connector [joint connector (CAN3) or headlamp automatic levelling-ECU improperly connected]
- Malfunction of the wiring harness [open circuit between the headlamp automatic levelling-ECU and the joint connector (CAN3), power supply circuit to the headlamp automatic levelling-ECU]
- Malfunction of the headlamp automatic levelling-ECU

DIAGNOSIS PROCEDURE

STEP 1. Connector check: C-14 headlamp automatic levelling-ECU connector and C-124 joint connector (CAN3)

⚠ CAUTION

The strand end of the twist wire should be within 10 cm from the connector. For details refer to .

Q: Is the check result normal?

YES : Go to Step 2.

NO : Repair the defective connector.

STEP 2. Check the wiring harness between C-14 headlamp automatic levelling-ECU connector and C-124 joint connector (CAN3)

⚠ CAUTION

Strictly observe the specified wiring harness repair procedure. For details refer to .

Disconnect headlamp automatic levelling-ECU connector and joint connector (CAN3), and check the following wiring harness for open circuit.

(1) The wiring harness between C-14 headlamp automatic levelling-ECU connector terminal No.23 and C-124 joint connector (CAN3) terminal No.8 <Diesel> or 7 <Petrol> <CAN_H>

OK: Continuity exists (2 Ω or less)

(2) The wiring harness between C-14 headlamp automatic levelling-ECU connector terminal No.22 and C-124 joint connector (CAN3) terminal No.19 <Diesel> or 18 <Petrol> <CAN_L>

OK: Continuity exists (2 Ω or less)

Q: Is the check result normal?

YES : Check the power supply circuit of the headlamp automatic levelling-ECU. Refer to GROUP 54A – Headlamp – Troubleshooting .

NO : Repair the wiring harness.

www.cargeek.ir

www.CarGeek.ir

Diagnosis Item 10: Diagnose when the M.U.T.-III cannot receive the data sent by electric power steering-ECU <vehicles with electric power steering>

⚠ CAUTION

When servicing a CAN bus line, earth yourself by touching a metal object such as an unpainted water pipe. If you fail to do, a component connected to the CAN bus line may be broken.

www.cargeek.ir

www.cargeek.ir

www.CarGeek.ir

CAN-C Communication Circuit <Except for RALLIART>

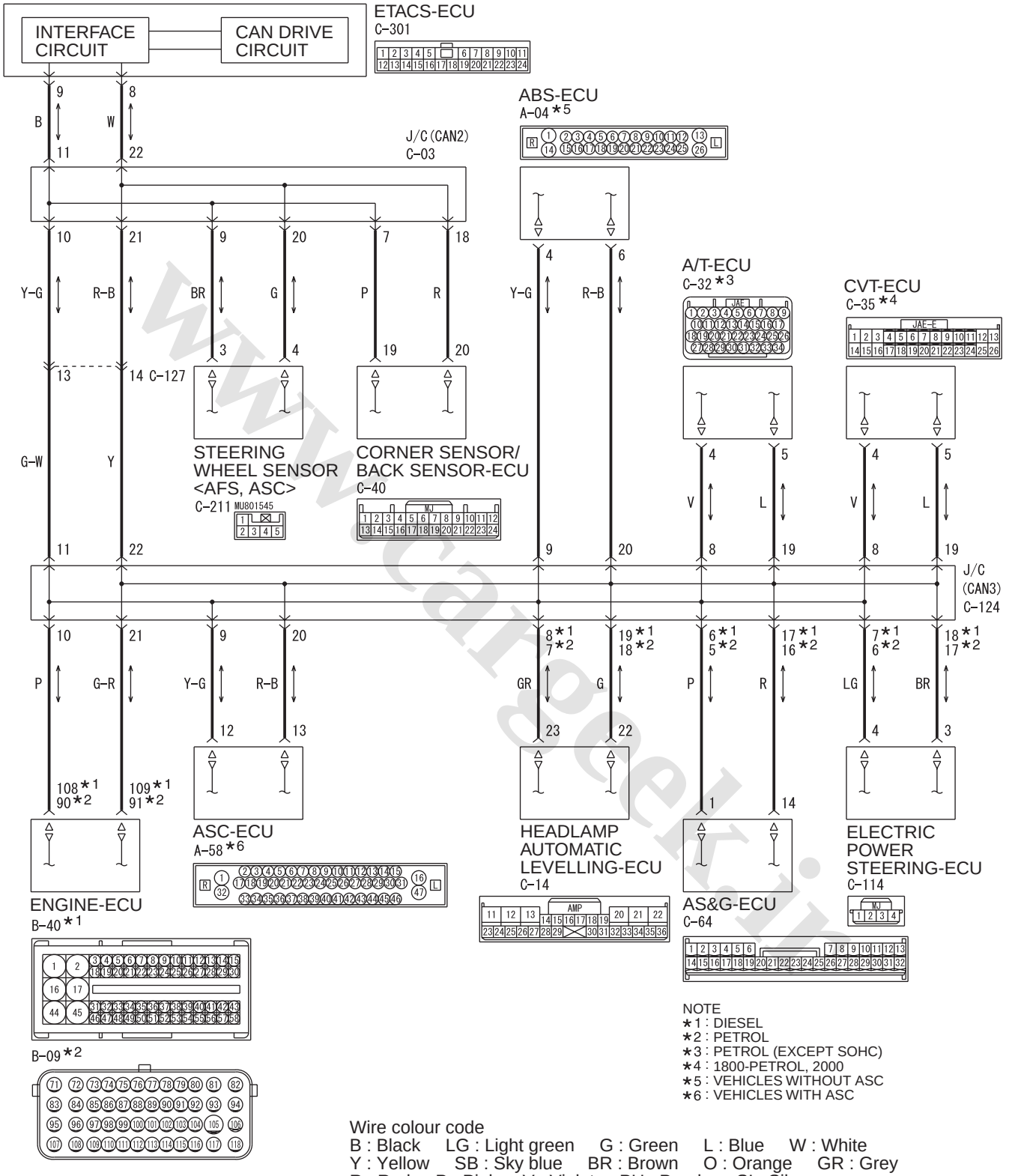

www.cargeek.ir

www.CarGeek.ir

Connector: C-114 <LHD>

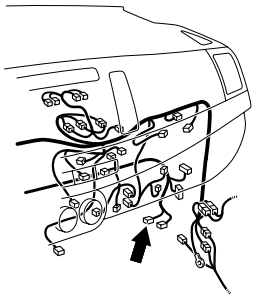

AC709894AE

Connector: C-114 <RHD>

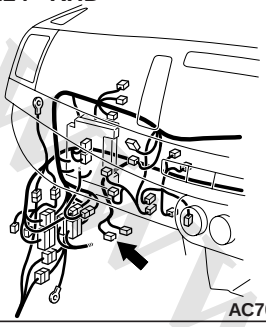

AC701121BR

Connector: C-124 <LHD>

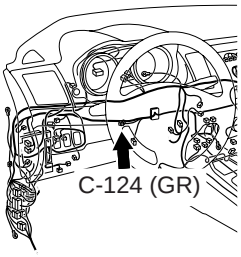

ACB02645AH

Connector: C-124 <RHD>

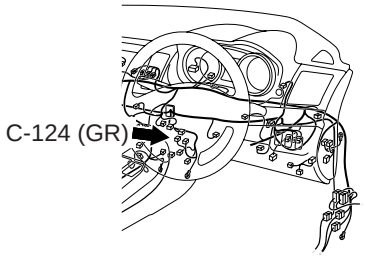

ACB02647AE

FUNCTION

If the M.U.T.-III cannot communicate with the electric power steering-ECU, this diagnosis result will be set.

TROUBLE JUDGEMENT CONDITIONS

If a communication flag is not set for the electric power steering-ECU, the ETACS-ECU determines that there is a failure.

TROUBLESHOOTING HINTS

- Malfunction of the connector [joint connector (CAN3) or electric power steering-ECU connector improperly connected]
- Malfunction of the wiring harness [open circuit between the electric power steering-ECU and the joint connector (CAN3), power supply circuit to the electric power steering-ECU]
- Malfunction of the electric power steering-ECU

DIAGNOSIS PROCEDURE

STEP 1. Connector check: C-114 electric power steering-ECU connector and C-124 joint connector (CAN3)

⚠ CAUTION

The strand end of the twist wire should be within 10 cm from the connector. For details refer to .

Q: Is the check result normal?

YES : Go to Step 2.

NO : Repair the defective connector.

STEP 2. Check the wiring harness between C-114 electric power steering-ECU connector and C-124 joint connector (CAN3)

⚠ CAUTION

Strictly observe the specified wiring harness repair procedure. For details refer to .

Disconnect electric power steering-ECU connector and joint connector (CAN3), and check the following wiring harness for open circuit.

(1) The wiring harness between C-114 electric power steering-ECU connector terminal No.4 and C-124 joint connector (CAN3) terminal No.6 <Petrol> or 7 <Diesel> <CAN_H>

OK: Continuity exists (2 Ω or less)

(2) The wiring harness between C-114 electric power steering-ECU connector terminal No.3 and C-124 joint connector (CAN3) terminal No.17 <Petrol> or 18 <Diesel> <CAN_L>

OK: Continuity exists (2 Ω or less)

Q: Is the check result normal?

YES : Check the power supply circuit of the electric power steering-ECU. Refer to GROUP 37B – Electric power steering – Troubleshooting .

NO : Repair the wiring harness.

www.cargeek.ir

www.CarGeek.ir

Diagnosis Item 11: Diagnose when the M.U.T.-III cannot receive the data sent by A/T-ECU <A/T> or CVT-ECU <CVT>

⚠ CAUTION

When servicing a CAN bus line, earth yourself by touching a metal object such as an unpainted water pipe. If you fail to do, a component connected to the CAN bus line may be broken.

www.cargeek.ir

www.cargeek.ir

www.CarGeek.ir

CAN-C Communication Circuit <Except for RALLIART>

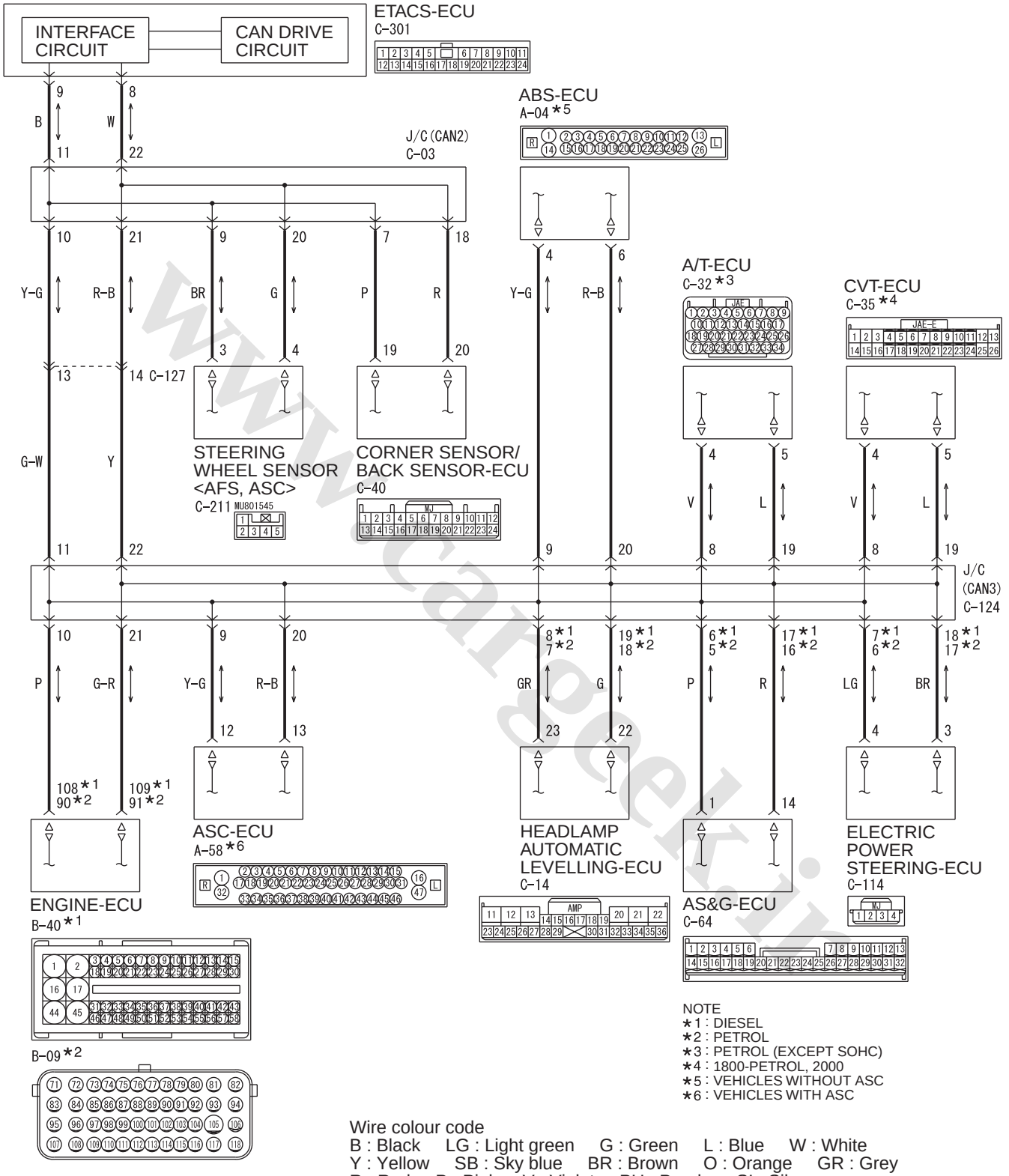

www.cargeek.ir

www.CarGeek.ir

Connectors: C-32, C-35, C-124 <LHD>

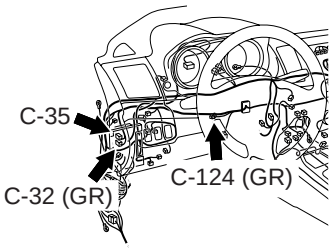

ACB02645AI

Connector: C-35 <RHD>

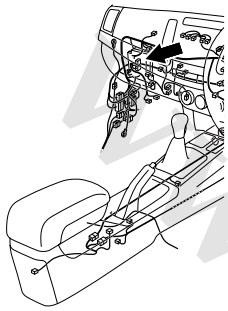

ACB02648AE

Connector: C-124 <RHD>

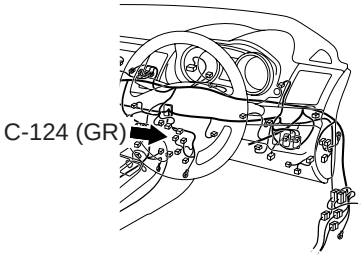

ACB02647AE

FUNCTION

If the M.U.T.-III cannot communicate with the A/T-ECU <A/T> or CVT-ECU <CVT>, this diagnosis result will be set.

TROUBLE JUDGEMENT CONDITIONS

If a communication flag is not set for the A/T-ECU <A/T> or CVT-ECU <CVT>, the ETACS-ECU determines that there is a failure.

TROUBLESHOOTING HINTS

- Malfunction of the connector [joint connector (CAN3) or A/T-ECU <A/T> or CVT-ECU <CVT> improperly connected]
- Malfunction of the wiring harness [open circuit between the A/T-ECU <A/T> or CVT-ECU <CVT> and the joint connector (CAN3), power supply circuit to the A/T-ECU <A/T> or CVT-ECU <CVT>]
- Malfunction of the A/T-ECU <A/T> or CVT-ECU <CVT>

DIAGNOSIS PROCEDURE

STEP 1. Connector check: C-124 joint connector (CAN3) and C-32 A/T-ECU connector <A/T> or C-35 CVT-ECU connector <CVT>

⚠ CAUTION

The strand end of the twist wire should be within 10 cm from the connector. For details refer to .

Q: Is the check result normal?

YES : Go to Step 2.

NO : Repair the defective connector.

STEP 2. Check the wiring harness between C-32 A/T-ECU connector <A/T> or C-35 CVT-ECU connector <CVT> and C-124 joint connector (CAN3)

⚠ CAUTION

Strictly observe the specified wiring harness repair procedure. For details refer to .

Disconnect shift lever connector and joint connector (CAN3), and check the following wiring harness for open circuit.

(1) The wiring harness between C-32 A/T-ECU <A/T> or C-35 CVT-ECU <CVT> connector terminal No.4 and C-124 joint connector (CAN3) terminal No.8 <CAN_H>

OK: Continuity exists (2 Ω or less)

(2) The wiring harness between C-32 A/T-ECU <A/T> or C-35 CVT-ECU <CVT> connector terminal No.5 and C-124 joint connector (CAN3) terminal No.19 <CAN_L>

OK: Continuity exists (2 Ω or less)

Q: Is the check result normal?

YES : Check the power supply circuit of the CVT-ECU <CVT> or A/T-ECU <A/T>. Refer to GROUP 23A – Troubleshooting <CVT> or GROUP 23C – Troubleshooting <A/T>.

NO : Repair the wiring harness.

www.cargeek.ir

www.CarGeek.ir

Diagnosis Item 12: Diagnose when the M.U.T.-III cannot receive the data sent by engine-ECU

⚠ CAUTION

When servicing a CAN bus line, earth yourself by touching a metal object such as an unpainted water pipe. If you fail to do, a component connected to the CAN bus line may be broken.

www.cargeek.ir

www.cargeek.ir

www.CarGeek.ir

CAN-C Communication Circuit <Except for RALLIART>

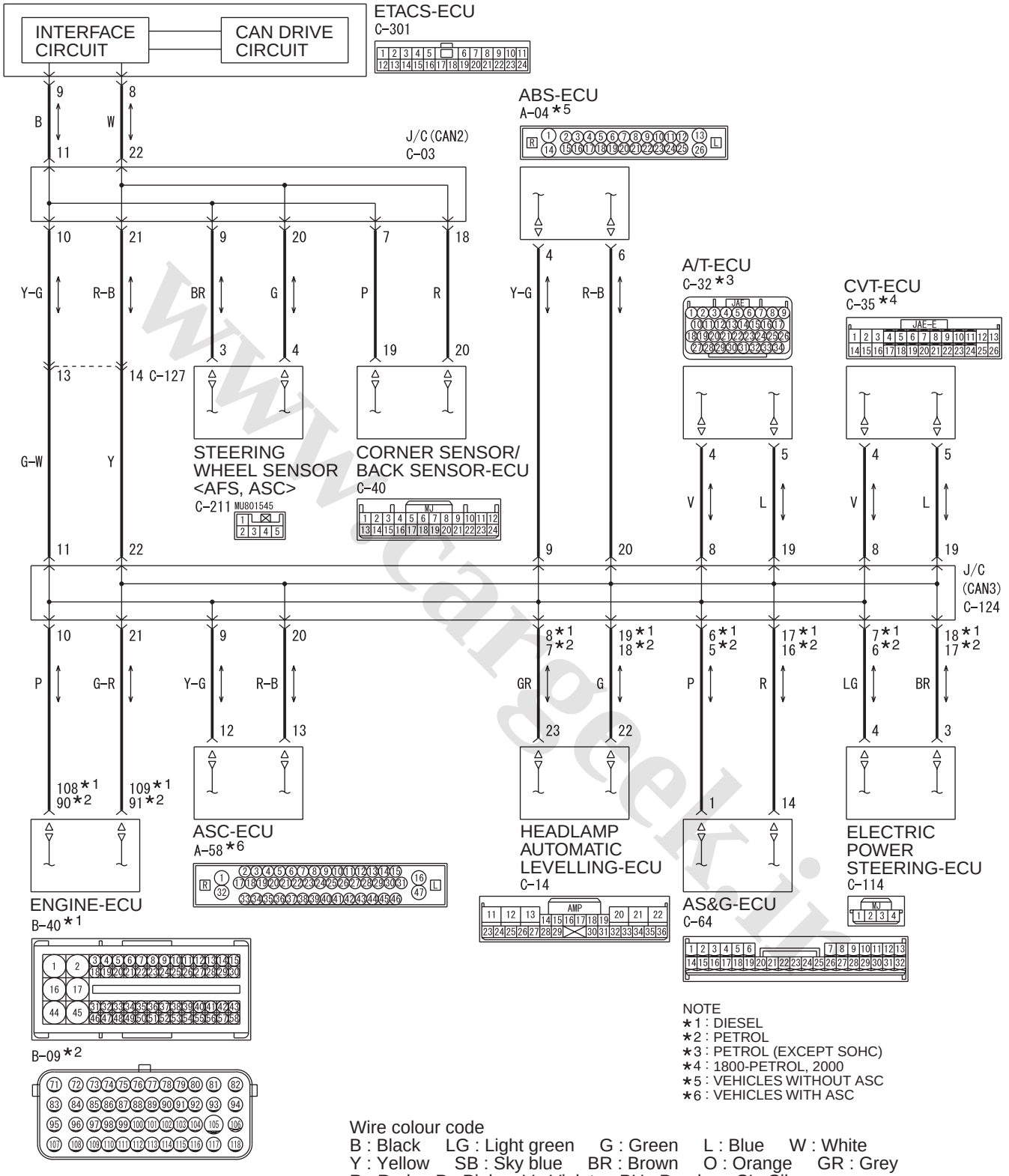

www.cargeek.ir

www.CarGeek.ir

Connectors: B-09, B-40

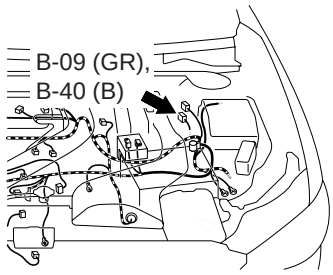

AC800715BC

Connector: C-124 <LHD>

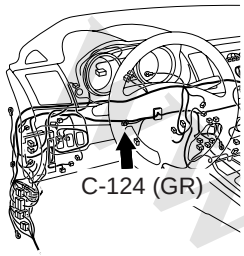

ACB02645AH

Connector: C-124 <RHD>

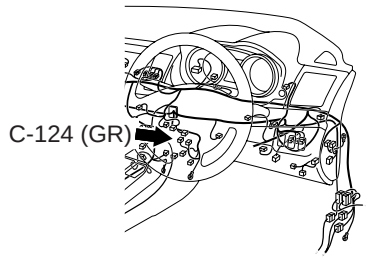

ACB02647AE

FUNCTION

If the M.U.T.-III cannot communicate with the engine-ECU, this diagnosis result will be set.

TROUBLE JUDGEMENT CONDITIONS

If a communication flag is not set for the engine-ECU, the ETACS-ECU determines that there is a failure.

TROUBLESHOOTING HINTS

- Malfunction of the connector [joint connector (CAN3) and engine-ECU connector improperly connected]
- Malfunction of the wiring harness [open circuit between the engine-ECU and the joint connector (CAN3) power supply circuit to the engine-ECU]
- Malfunction of the engine-ECU

DIAGNOSIS PROCEDURE

STEP 1. Connector check: B-09 <Petrol> or B-40 <Diesel> engine-ECU connector and C-124 joint connector (CAN3)

⚠ CAUTION

The strand end of the twist wire should be within 10 cm from the connector. For details refer to .

Q: Is the check result normal?

YES : Go to Step 2.

NO : Repair the defective connector.

STEP 2. Check the wiring harness between B-09 <Petrol> or B-40 <Diesel> engine-ECU connector and C-124 joint connector (CAN3)

⚠ CAUTION

Strictly observe the specified wiring harness repair procedure. For details refer to .

Disconnect engine-ECU connector and joint connector (CAN3) and check the following wiring harness for open circuit.

(1) The wiring harness between B-09 <Petrol> or B-40 <Diesel> engine-ECU connector terminal No.90 <Petrol> or 108 <Diesel> and C-124 joint connector (CAN3) terminal No.4 <CAN_H>

OK: Continuity exists (2 Ω or less)

(2) The wiring harness between B-09 <Petrol> or B-40 <Diesel> engine-ECU connector terminal No.91 <Petrol> or 109 <Diesel> and C-124 joint connector (CAN3) terminal No.15 <CAN_L>

OK: Continuity exists (2 Ω or less)

Q: Is the check result normal?

YES : Check the power supply circuit of the engine-ECU. Refer to GROUP 13A – Troubleshooting <1600>, GROUP 13B – Troubleshooting <Petrol (1800-DOHC), 2000>, GROUP 13C – Troubleshooting <Diesel> or GROUP 13F – Troubleshooting <1800-SOHC>

NO : Repair the wiring harness.

www.cargeek.ir

www.CarGeek.ir

Diagnosis Item 13: Diagnose the lines between the ETACS-ECU and joint connector (CAN2)

⚠ CAUTION

When servicing a CAN bus line, earth yourself by touching a metal object such as an unpainted water pipe. If you fail to do, a component connected to the CAN bus line may be broken.

www.cargeek.ir

www.cargeek.ir

www.CarGeek.ir

CAN-C Communication Circuit <Except for RALLIART>

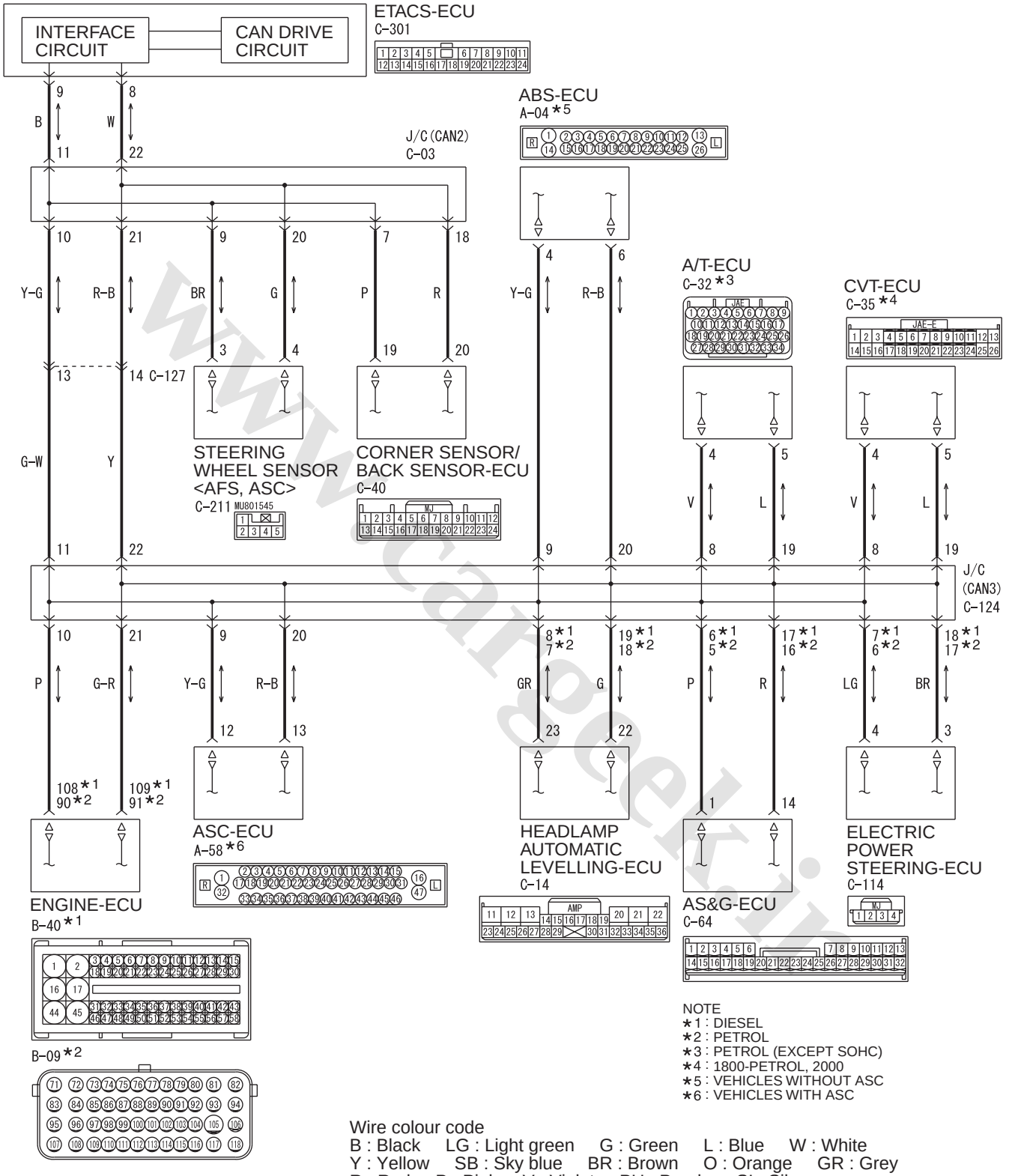

www.cargeek.ir

www.CarGeek.ir

Connector: C-03 <LHD>

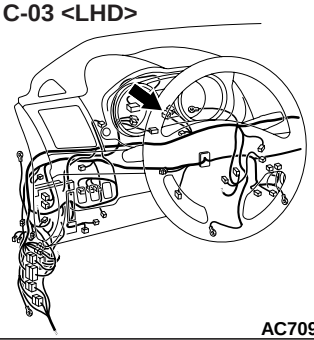

AC709893AM

Connector: C-03 <RHD>

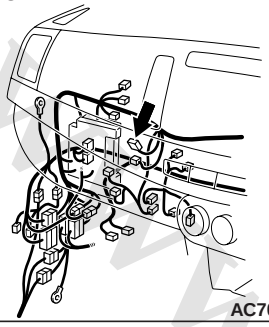

AC701121BP

Connector: C-301 <LHD>
ETACS-ECU

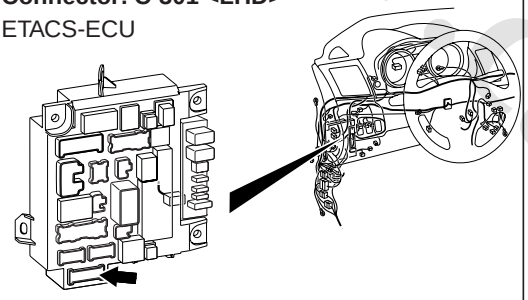

ACA00886BE

Connector: C-301 <RHD>
ETACS-ECU

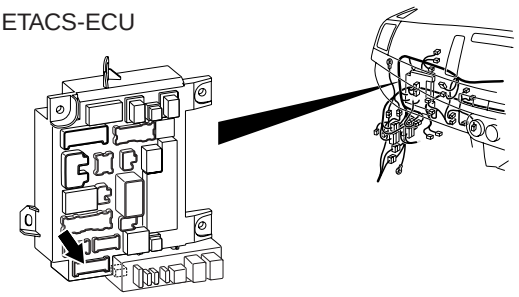

ACA00887BF

FUNCTION

If a failure is present in the wiring harness between the ETACS-ECU connector and the joint connector (CAN2), this diagnosis result will be set.

TROUBLE JUDGEMENT CONDITIONS

If a communication flag is not set for any ECU connected to CAN-C (CAN2 and CAN3), it is determined that a failure has occurred.

TROUBLESHOOTING HINTS

- Malfunction of the connector [joint connector (CAN2) or ETACS-ECU connector improperly connected]
- Malfunction of the wiring harness [open circuit between the ETACS-ECU connector and the joint connector (CAN2), power supply circuit to the engine-ECU]
- Malfunction of the ETACS-ECU

DIAGNOSIS PROCEDURE

STEP 1. Connector check: C-03 joint connector (CAN2) and C-301 ETACS-ECU connector

⚠ CAUTION

The strand end of the twist wire should be within 10 cm from the connector. For details refer to .

Q: Is the check result normal?
YES : Go to Step 2.
NO : Repair the defective connector.

STEP 2. Check the wiring harness between C-301 ETACS-ECU connector and C-03 joint connector (CAN2)

⚠ CAUTION

Strictly observe the specified wiring harness repair procedure. For details refer to .

Disconnect ETACS-ECU connector and joint connector (CAN2), and check the following wiring harness for open circuit

(1) The wiring harness between C-301 ETACS-ECU connector terminal No.6 and C-03 joint connector (CAN2) terminal No.11 <CAN_H>

OK: Continuity exists (2 Ω or less)

(2) The wiring harness between C-301 ETACS-ECU connector terminal No.7 and C-03 joint connector (CAN2) terminal No.22 <CAN_L>

OK: Continuity exists (2 Ω or less)

Q: Is the check result normal?
YES : Go to Step 3.
NO : Repair the wiring harness.

STEP 3. Trouble symptom check

Diagnose the CAN bus line, and check that normal condition is displayed.

Q: Is the check result normal?

www.cargeek.ir

www.CarGeek.ir

YES : The trouble can be an intermittent malfunction (Refer to GROUP 00 – How to use Troubleshooting/inspection Service Points – How to Cope with Intermittent Malfunction).

NO : Replace the ETACS-ECU.

www.cargeek.ir

www.cargeek.ir

www.CarGeek.ir

Diagnosis Item 14: Diagnose the lines between joint connector (CAN2) and joint connector (CAN3)

⚠ CAUTION

When servicing a CAN bus line, earth yourself by touching a metal object such as an unpainted water pipe. If you fail to do, a component connected to the CAN bus line may be broken.

www.cargeek.ir

www.cargeek.ir

www.CarGeek.ir

CAN-C Communication Circuit <Except for RALLIART>

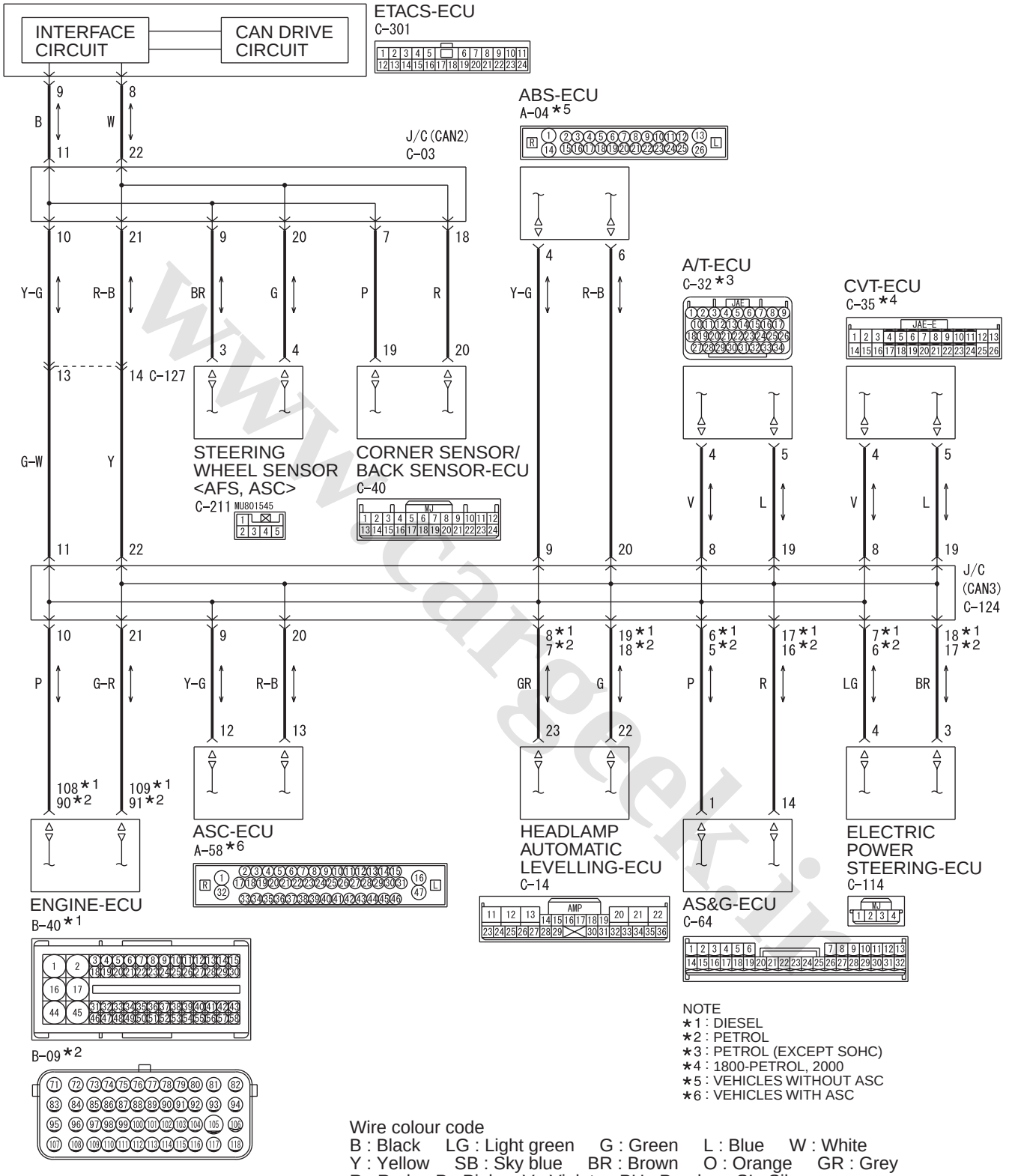

www.cargeek.ir

www.CarGeek.ir

Connectors: C-03, C-124, C-127 <LHD>

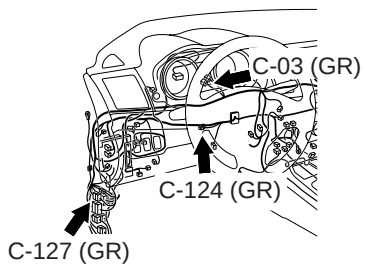

ACB02645AJ

Connectors: C-03, C-127 <RHD>

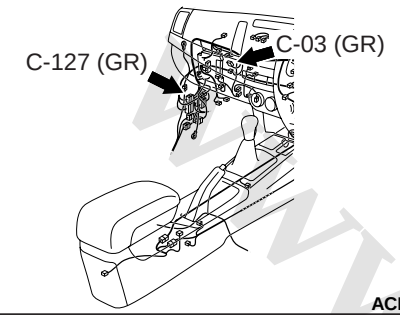

ACB02648AF

Connector: C-124 <RHD>

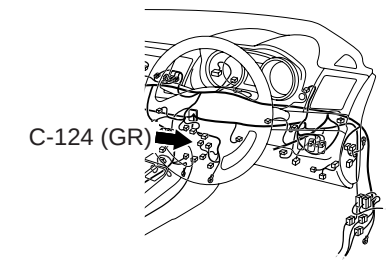

ACB02647AE

FUNCTION

If the M.U.T.-III cannot communicate with the joint connector (CAN2) and the joint connector (CAN3), this diagnosis result will be set.

TROUBLE JUDGEMENT CONDITIONS

If a communication flag is not set for any ECU connected to CAN-C (CAN3), it is determined that a failure has occurred.

TROUBLESHOOTING HINTS

- Malfunction of the connector [joint connector (CAN2), joint connector (CAN3) or intermediate connector failed]
- Malfunction of the wiring harness [open circuit between joint connector (CAN2) and joint connector (CAN3)]

DIAGNOSIS PROCEDURE

STEP 1. Connector check: C-03 joint connector (CAN2) and C-124 joint connector (CAN3)

⚠ CAUTION

The strand end of the twist wire should be within 10 cm from the connector. For details refer to .

Q: Is the check result normal?

YES : Go to Step 2.

NO : Repair the defective connector.

STEP 2. Check the wiring harness between C-03 joint connector (CAN2) and C-124 joint connector (CAN3)

⚠ CAUTION

Strictly observe the specified wiring harness repair procedure. For details refer to .

Disconnect joint connector (CAN2) and joint connector (CAN3), and check the following wiring harness for open circuit

(1) The wiring harness between C-03 joint connector (CAN2) terminal No.10 and C-124 joint connector (CAN3) terminal No.11 <CAN_H>

OK: Continuity exists (2 Ω or less)

(2) The wiring harness between C-03 joint connector (CAN2) terminal No.21 and C-124 joint connector (CAN3) terminal No.22 <CAN_L>

OK: Continuity exists (2 Ω or less)

NOTE: Check C-127 intermediate connector, and repair if necessary.

Q: Is the check result normal?

YES : The trouble can be an intermittent malfunction (Refer to GROUP 00 – How to use Troubleshooting/inspection Service Points – How to Cope with Intermittent Malfunctions).

NO : Repair the wiring harness.

www.cargeek.ir

www.CarGeek.ir

Diagnosis Item 15: Diagnose when the M.U.T.-III cannot receive the data sent by KOS-ECU <vehicles with KOS>

⚠ CAUTION

When servicing a CAN bus line, earth yourself by touching a metal object such as an unpainted water pipe. If you fail to do, a component connected to the CAN bus line may be broken.

www.cargeek.ir

www.cargeek.ir

www.CarGeek.ir

CAN-B Communication Circuit

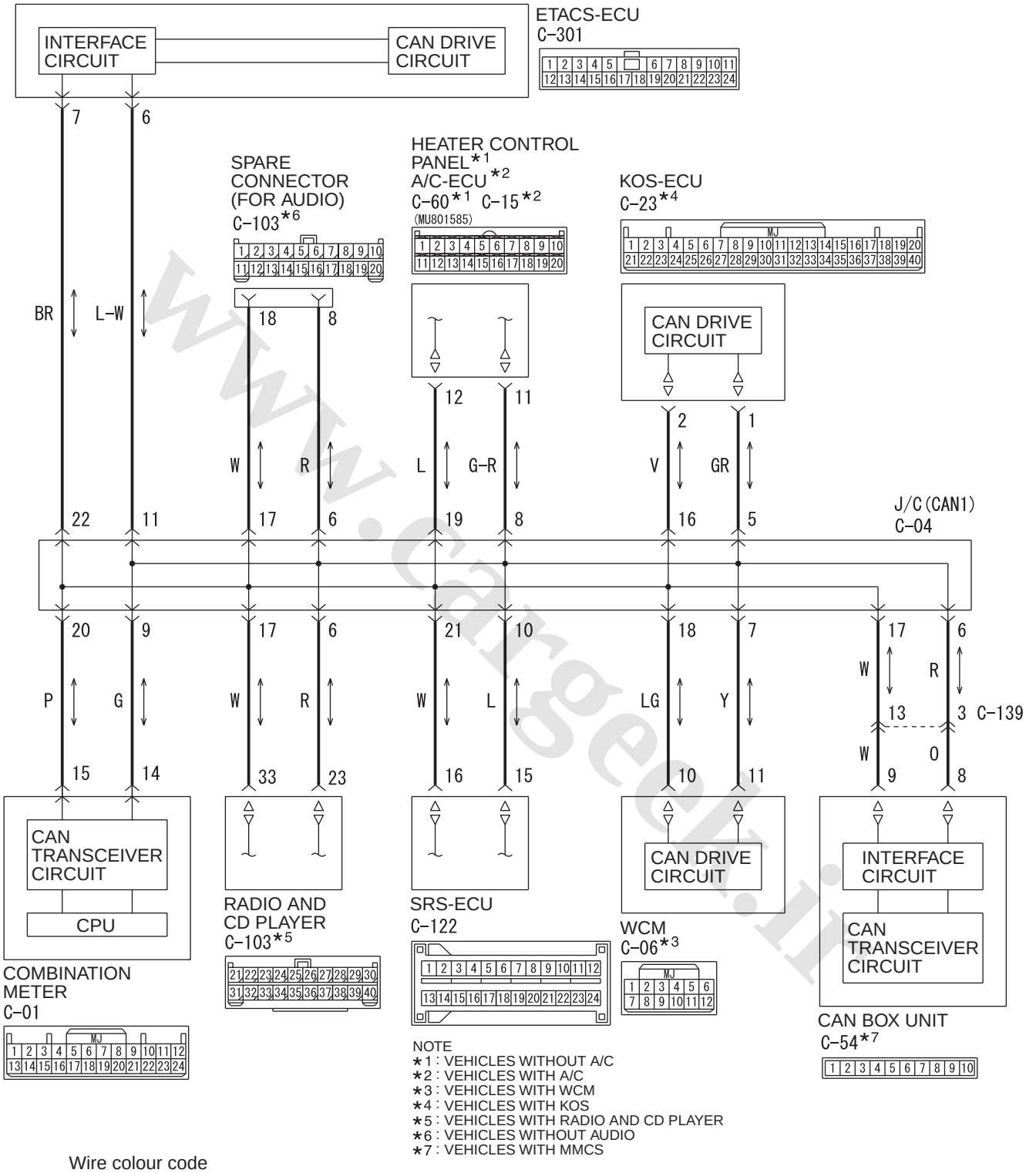

www.cargeek.ir

www.CarGeek.ir

Connectors: C-04, C-23 <LHD>

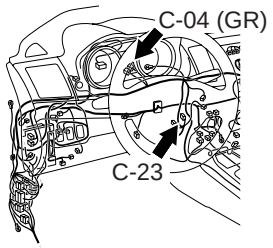

ACB02645AM

Connectors: C-04, C-23 <RHD>

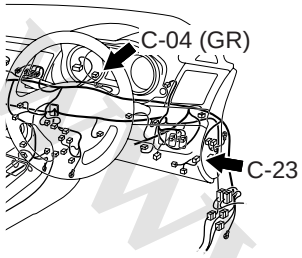

ACB02647AI

FUNCTION

If the M.U.T.-III cannot communicate with the KOS-ECU, this diagnosis result will be set.

TROUBLE JUDGEMENT CONDITIONS

If a communication flag is not set for the KOS-ECU, the ETACS-ECU determines that there is a failure.

TROUBLESHOOTING HINTS

- Malfunction of the connector [joint connector (CAN1) or KOS-ECU connector improperly connected]
- Malfunction of the wiring harness [open circuit between the KOS-ECU connector and the joint connector (CAN1), or power supply circuit to the KOS-ECU]
- Malfunction of the KOS-ECU

DIAGNOSIS PROCEDURE

STEP 1. Connector check: C-04 joint connector (CAN1) and C-23 KOS-ECU connector

⚠ CAUTION

The strand end of the twist wire should be within 10 cm from the connector. For details refer to .

Q: Is the check result normal?

YES : Go to Step 2.

NO : Repair the defective connector.

STEP 2. Check the wiring harness between C-23 KOS-ECU connector and C-04 joint connector (CAN1)

⚠ CAUTION

Strictly observe the specified wiring harness repair procedure. For details refer to .

Disconnect KOS-ECU connector and joint connector (CAN1), and check the following wiring harness for open circuit

(1) The wiring harness between C-23 KOS-ECU connector terminal No.1 and C-04 joint connector (CAN1) terminal No.5 <CAN_H>

OK: Continuity exists (2 Ω or less)

(2) The wiring harness between C-23 KOS-ECU connector terminal No.2 and C-04 joint connector (CAN1) terminal No.16 <CAN_L>

OK: Continuity exists (2 Ω or less)

Q: Is the check result normal?

YES : Check the power supply circuit of the KOS-ECU. Refer to GROUP 42B – Troubleshooting .

NO : Repair the wiring harness.

www.cargeek.ir

www.CarGeek.ir

Diagnosis Item 16: Diagnose when the M.U.T.-III cannot receive the data sent by WCM <vehicles without KOS>

⚠ CAUTION

When servicing a CAN bus line, earth yourself by touching a metal object such as an unpainted water pipe. If you fail to do, a component connected to the CAN bus line may be broken.

www.cargeek.ir

www.cargeek.ir

www.CarGeek.ir

CAN-B Communication Circuit

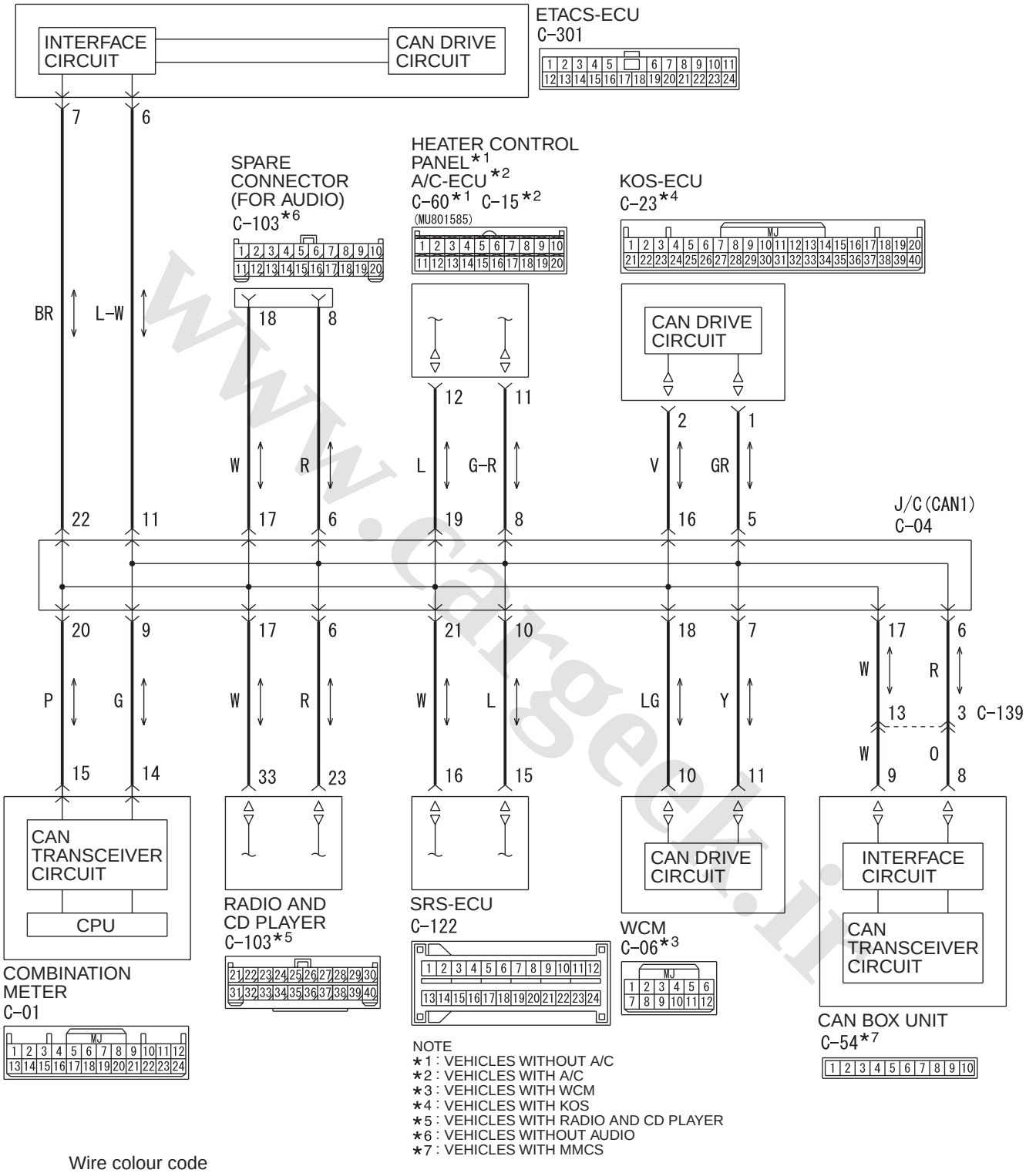

NOTE
*1 : VEHICLES WITHOUT A/C
*2 : VEHICLES WITH A/C
*3 : VEHICLES WITH WCM
*4 : VEHICLES WITH KOS
*5 : VEHICLES WITH RADIO AND CD PLAYER
*6 : VEHICLES WITHOUT AUDIO
*7 : VEHICLES WITH MMCS

Wire colour code
B : Black LG : Light green G : Green L : Blue W : White Y : Yellow SB : Sky blue
BR : Brown O : Orange GR : Grey R : Red P : Pink V : Violet PU : Purple SI : Silver

WDH54E016A

www.cargeek.ir

www.CarGeek.ir

Connectors: C-04, C-06 <LHD>

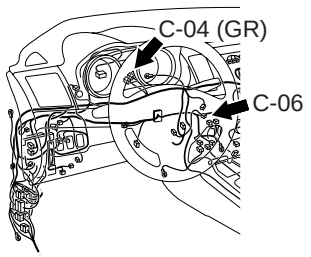

ACB02645AN

Connectors: C-04, C-06 <RHD>

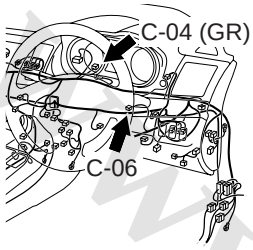

ACB02647AJ

FUNCTION

If the M.U.T.-III cannot communicate with the WCM, this diagnosis result will be set.

TROUBLE JUDGEMENT CONDITIONS

If a communication flag is not set for the WCM, the ETACS-ECU determines that there is a failure.

TROUBLESHOOTING HINTS

- Malfunction of the connector [joint connector (CAN1) or WCM connector improperly connected]
- Malfunction of the wiring harness [open circuit between the WCM connector and the joint connector (CAN1), or power supply circuit to the WCM]
- Malfunction of the WCM

DIAGNOSIS PROCEDURE

STEP 1. Connector check: C-04 joint connector (CAN1) and C-06 WCM connector

⚠ CAUTION

The strand end of the twist wire should be within 10 cm from the connector. For details refer to .

Q: Is the check result normal?

YES : Go to Step 2.

NO : Repair the defective connector.

STEP 2. Check the wiring harness between C-06 WCM connector and C-04 joint connector (CAN1)

⚠ CAUTION

Strictly observe the specified wiring harness repair procedure. For details refer to .

Disconnect WCM connector and joint connector (CAN1), and check the following wiring harness for open circuit

(1) The wiring harness between C-06 WCM connector terminal No.11 and C-04 joint connector (CAN1) terminal No.7 <CAN_H>

OK: Continuity exists (2 Ω or less)

(2) The wiring harness between C-06 WCM connector terminal No.10 and C-04 joint connector (CAN1) terminal No.18 <CAN_L>

OK: Continuity exists (2 Ω or less)

Q: Is the check result normal?

YES : Check the power supply circuit of the WCM. Refer to GROUP 42C –WCM– Troubleshooting .

NO : Repair the wiring harness.

www.cargeek.ir

www.CarGeek.ir

Diagnosis Item 17: Diagnose when the M.U.T.-III cannot receive the data sent by SRS-ECU

⚠ CAUTION

When servicing a CAN bus line, earth yourself by touching a metal object such as an unpainted water pipe. If you fail to do, a component connected to the CAN bus line may be broken.

www.cargeek.ir

www.cargeek.ir

www.CarGeek.ir

CAN-B Communication Circuit

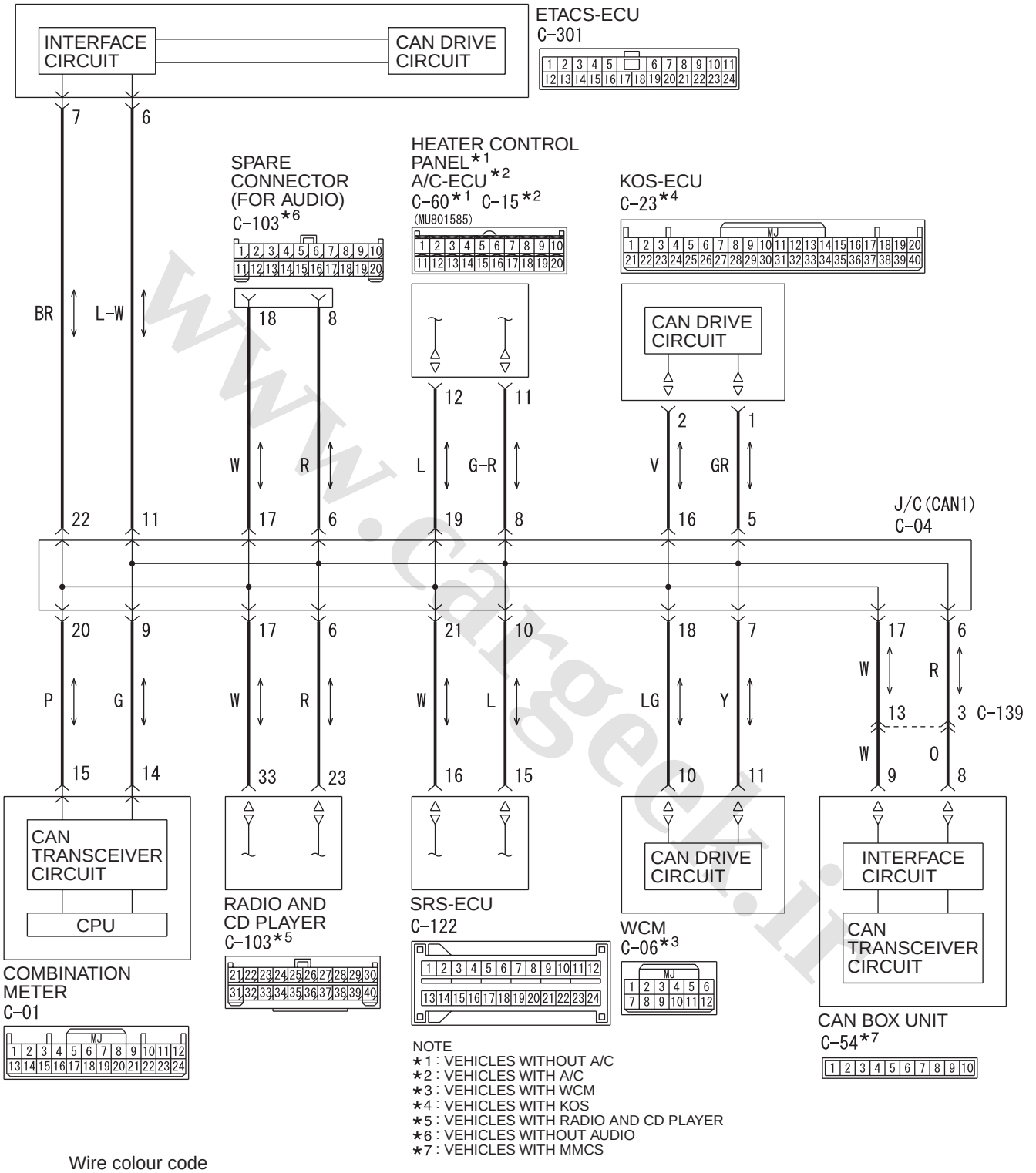

www.cargeek.ir

www.CarGeek.ir

Connectors: C-04, C-122 <LHD>

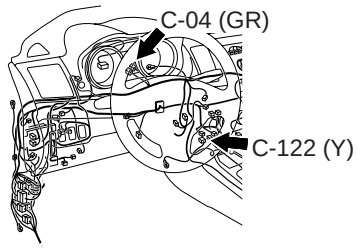

ACB02645AO

Connectors: C-04, C-122 <RHD>

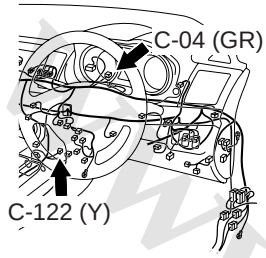

ACB02647AK

FUNCTION

If the M.U.T.-III cannot communicate with the SRS-ECU, this diagnosis result will be set.

TROUBLE JUDGEMENT CONDITIONS

If a communication flag is not set for the SRS-ECU, the ETACS-ECU determines that there is a failure.

TROUBLESHOOTING HINTS

- Malfunction of the connector [joint connector (CAN1) or SRS-ECU connector improperly connected]
- Malfunction of the wiring harness [open circuit between the SRS-ECU connector and the joint connector (CAN1), or power supply circuit to the SRS-ECU]
- Malfunction of the SRS-ECU

DIAGNOSIS PROCEDURE

STEP 1. Connector check: C-04 joint connector (CAN1) and C-122 SRS-ECU connector

⚠ CAUTION

The strand end of the twist wire should be within 10 cm from the connector. For details refer to .

Q: Is the check result normal?

YES : Go to Step 2.

NO : Repair the defective connector.

STEP 2. Check the wiring harness between C-122 SRS-ECU connector and C-04 joint connector (CAN1)

⚠ CAUTION

Strictly observe the specified wiring harness repair procedure. For details refer to .

Disconnect SRS-ECU connector and joint connector (CAN1), and check the following wiring harness for open circuit

(1) The wiring harness between C-122 SRS-ECU connector terminal No.15 and C-04 joint connector (CAN1) terminal No.10 <CAN_H>

OK: Continuity exists (2 Ω or less)

(2) The wiring harness between C-122 SRS-ECU connector terminal No.16 and C-04 joint connector (CAN1) terminal No.21 <CAN_L>

OK: Continuity exists (2 Ω or less)

Q: Is the check result normal?

YES : Check the power supply circuit of the SRS-ECU. Refer to GROUP 52B – Troubleshooting .

NO : Repair the wiring harness.

www.cargeek.ir

www.CarGeek.ir

Diagnosis Item 18: Diagnose when the M.U.T.-III cannot receive the data sent by heater control unit <vehicles without A/C> or A/C-ECU <vehicles with A/C>

⚠ CAUTION

When servicing a CAN bus line, earth yourself by touching a metal object such as an unpainted water pipe. If you fail to do, a component connected to the CAN bus line may be broken.

www.cargeek.ir

www.cargeek.ir

www.CarGeek.ir

CAN-B Communication Circuit

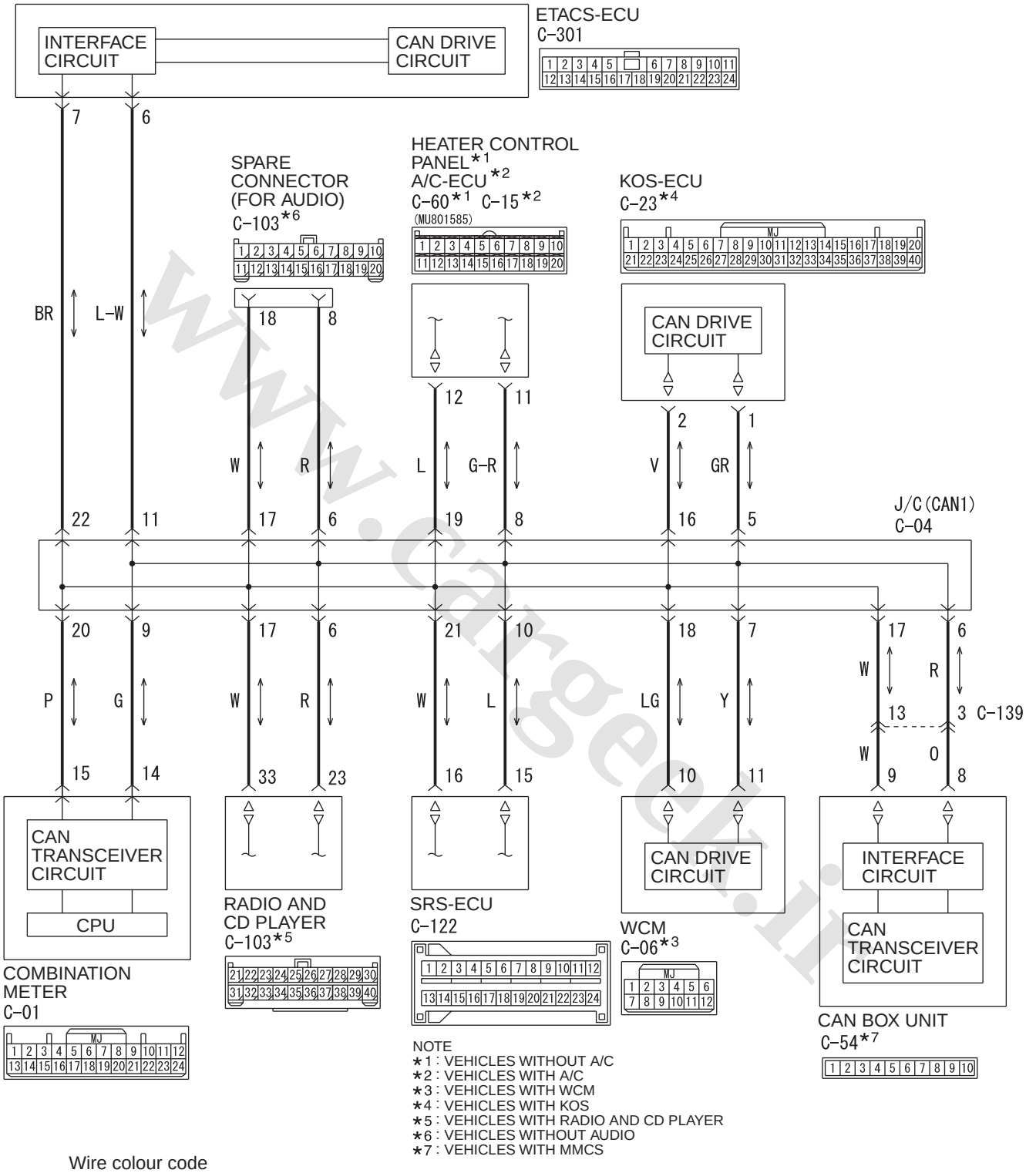

NOTE
*1 : VEHICLES WITHOUT A/C
*2 : VEHICLES WITH A/C
*3 : VEHICLES WITH WCM
*4 : VEHICLES WITH KOS
*5 : VEHICLES WITH RADIO AND CD PLAYER
*6 : VEHICLES WITHOUT AUDIO
*7 : VEHICLES WITH MMCS

Wire colour code
B : Black LG : Light green G : Green L : Blue W : White Y : Yellow SB : Sky blue
BR : Brown O : Orange GR : Grey R : Red P : Pink V : Violet PU : Purple SI : Silver

WDH54E016A

www.cargeek.ir

www.CarGeek.ir

Connector: C-04 <LHD>

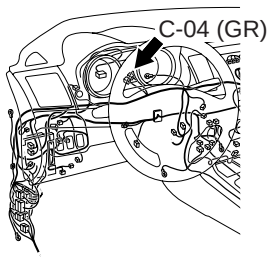

ACB02645AL

Connector: C-04 <RHD>

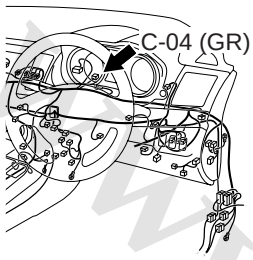

ACB02647AH

Connector: C-15 <LHD>

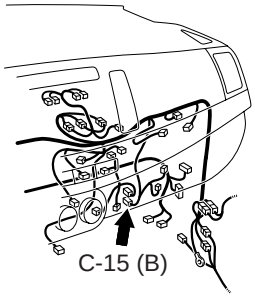

AC709894AF

Connector: C-15 <RHD>

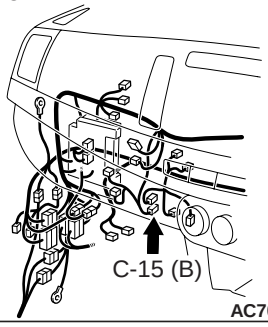

AC701121BT

FUNCTION

If the M.U.T.-III cannot communicate with the heater control unit <vehicles without A/C> or A/C-ECU <vehicles with A/C>, this diagnosis result will be set.

TROUBLE JUDGEMENT CONDITIONS

If a communication flag is not set for the heater control unit <vehicles without A/C> or A/C-ECU <vehicles with A/C>, the ETACS-ECU determines that there is a failure.

TROUBLESHOOTING HINTS

- Malfunction of the connector [joint connector (CAN1) or heater control unit <vehicles without A/C> or A/C-ECU <vehicles with A/C> connector improperly connected]
- Malfunction of the wiring harness [open circuit between the heater control unit <vehicles without A/C> or A/C-ECU <vehicles with A/C> connector and the joint connector (CAN1), or power supply circuit to the heater control unit <vehicles without A/C> or A/C-ECU <vehicles with A/C>]
- Malfunction of the heater control unit <vehicles without A/C> or A/C-ECU <vehicles with A/C>

DIAGNOSIS PROCEDURE

STEP 1. Connector check: C-04 joint connector (CAN1) and C-60 heater control unit connector <vehicles without A/C> or C-15 A/C-ECU connector <vehicles with A/C>

⚠ CAUTION

The strand end of the twist wire should be within 10 cm from the connector. For details refer to .

Q: Is the check result normal?

YES : Go to Step 2.

NO : Repair the defective connector.

STEP 2. Check the wiring harness between C-60 heater control unit connector <vehicles without A/C> or C-15 A/C-ECU connector <vehicles with A/C> and C-04 joint connector (CAN1)

⚠ CAUTION

Strictly observe the specified wiring harness repair procedure. For details refer to .

Disconnect heater control unit connector <vehicles without A/C> or A/C-ECU connector <vehicles with A/C> and joint connector (CAN1), and check the following wiring harness for open circuit

(1) The wiring harness between C-60 heater control unit connector <vehicles without A/C> or C-15 A/C-ECU connector <vehicles with A/C> terminal No.11 and C-04 joint connector (CAN1) terminal No.8 <CAN_H>

OK: Continuity exists (2 Ω or less)

(2) The wiring harness between C-60 heater control unit connector <vehicles without A/C> or C-15 A/C-ECU connector <vehicles with A/C> terminal No.12 and C-04 joint connector (CAN1) terminal No.19 <CAN_L>

OK: Continuity exists (2 Ω or less)

Q: Is the check result normal?

www.cargeek.ir

www.CarGeek.ir

YES : Check the power supply circuit of the heater control unit <vehicles without A/C> or A/C-ECU <vehicles with A/C>. Refer to GROUP 55A, Manual A/C Diagnosis or GROUP 55B, Auto A/C Diagnosis .

NO : Repair the wiring harness.

www.cargeek.ir

www.cargeek.ir

www.CarGeek.ir

Diagnosis Item 19: Diagnose when the M.U.T.-III cannot receive the data sent by CAN box unit <vehicles with MMCS (vehicles for Russia)>

⚠ CAUTION

When servicing a CAN bus line, earth yourself by touching a metal object such as an unpainted water pipe. If you fail to do, a component connected to the CAN bus line may be broken.

www.cargeek.ir

www.cargeek.ir

www.CarGeek.ir

CAN-B Communication Circuit

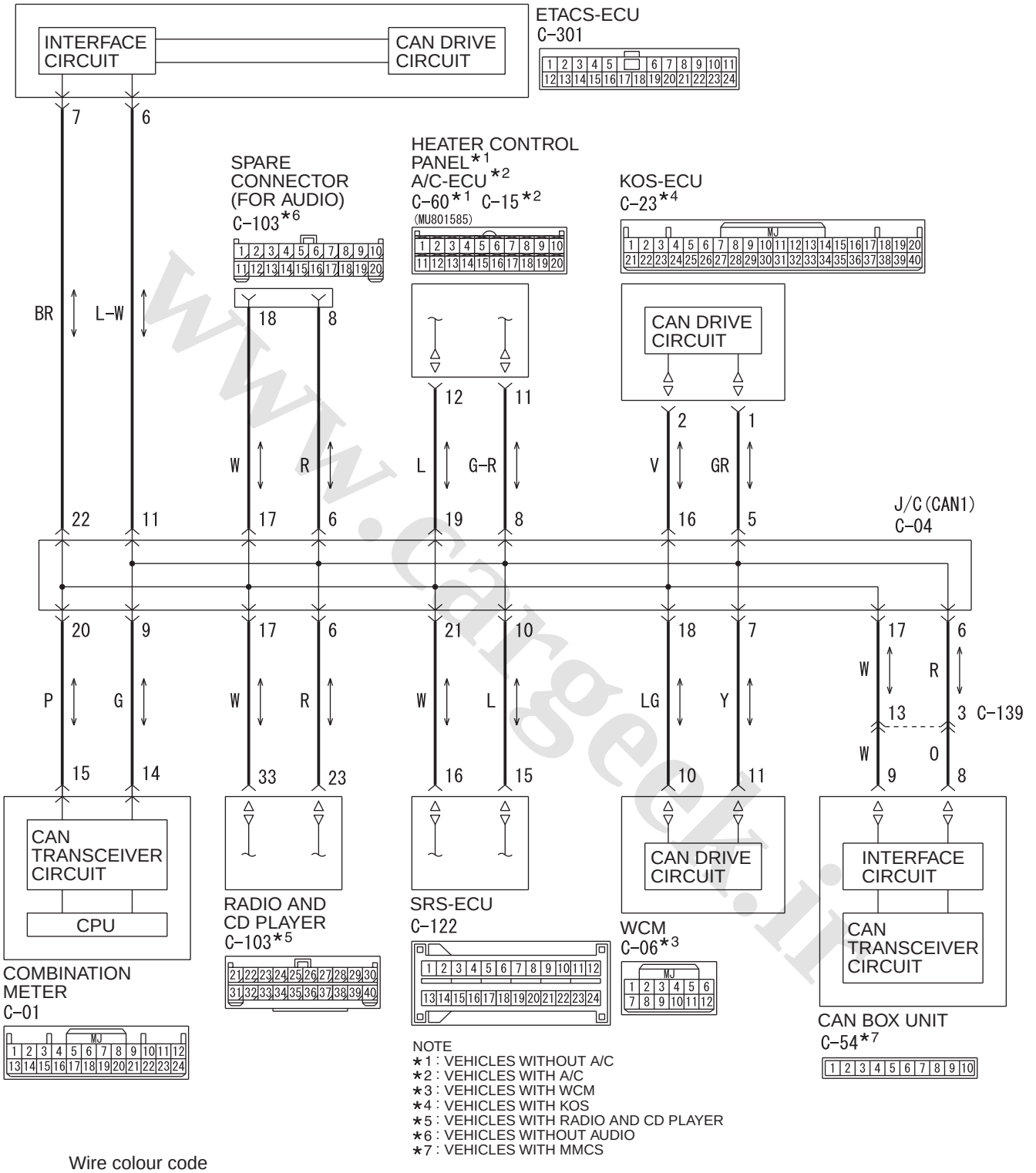

NOTE
*1 : VEHICLES WITHOUT A/C
*2 : VEHICLES WITH A/C
*3 : VEHICLES WITH WCM
*4 : VEHICLES WITH KOS
*5 : VEHICLES WITH RADIO AND CD PLAYER
*6 : VEHICLES WITHOUT AUDIO
*7 : VEHICLES WITH MMCS

Wire colour code
B : Black LG : Light green G : Green L : Blue W : White Y : Yellow SB : Sky blue
BR : Brown O : Orange GR : Grey R : Red P : Pink V : Violet PU : Purple SI : Silver

WDH54E016A

www.cargeek.ir

www.CarGeek.ir

Connector: C-04 <LHD>

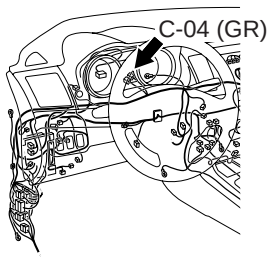

ACB02645AL

Connectors: C-04, C-139 <RHD>

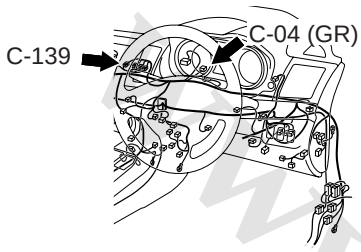

ACB02647AL

Connectors: C-54, C-139 <LHD>

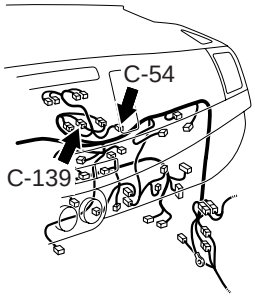

AC709894AG

FUNCTION

If the M.U.T.-III cannot communicate with the CAN box unit <vehicles with MMCS (vehicles for Russia)>, this diagnosis result will be set.

TROUBLE JUDGEMENT CONDITIONS

If a communication flag is not set for the CAN box unit, the ETACS-ECU determines that there is a failure.

TROUBLESHOOTING HINTS

- Malfunction of the connector [joint connector (CAN1) or CAN box unit connector improperly connected]
- Malfunction of the wiring harness [open circuit between the CAN box unit connector and the joint connector (CAN1), power supply circuit of the CAN box unit]
- Malfunction of the CAN box unit

DIAGNOSIS PROCEDURE

STEP 1. Connector check: C-04 joint connector (CAN1) and C-54 CAN box unit connector

⚠ CAUTION

The strand end of the twist wire should be within 10 cm from the connector. For details refer to .

Q: Is the check result normal?

YES : Go to Step 2.

NO : Repair the defective connector.

STEP 2. Check the wiring harness between C-54 CAN box unit connector and C-04 joint connector (CAN1)

⚠ CAUTION

Strictly observe the specified wiring harness repair procedure. For details refer to .

Disconnect CAN box unit connector and joint connector (CAN1), and check the following wiring harness for open circuit

(1) The wiring harness between C-54 CAN box unit connector terminal No.8 and C-04 joint connector (CAN1) terminal No.6 <CAN_H>

OK: Continuity exists (2 Ω or less)

(2) The wiring harness between C-54 CAN box unit connector terminal No.9 and C-04 joint connector (CAN1) terminal No.17 <CAN_L>

OK: Continuity exists (2 Ω or less)

NOTE: Check C-139 intermediate connector, and repair if necessary.

Q: Is the check result normal?

YES : Check the power supply circuit of the CAN box unit. Refer to GROUP 54A – MMCS – Troubleshooting .

NO : Repair the wiring harness.

www.cargeek.ir

www.CarGeek.ir

Diagnosis Item 20: Diagnose when the M.U.T.-III cannot receive the data sent by combination meter

⚠ CAUTION

When servicing a CAN bus line, earth yourself by touching a metal object such as an unpainted water pipe. If you fail to do, a component connected to the CAN bus line may be broken.

www.cargeek.ir

www.cargeek.ir

www.CarGeek.ir

CAN-B Communication Circuit

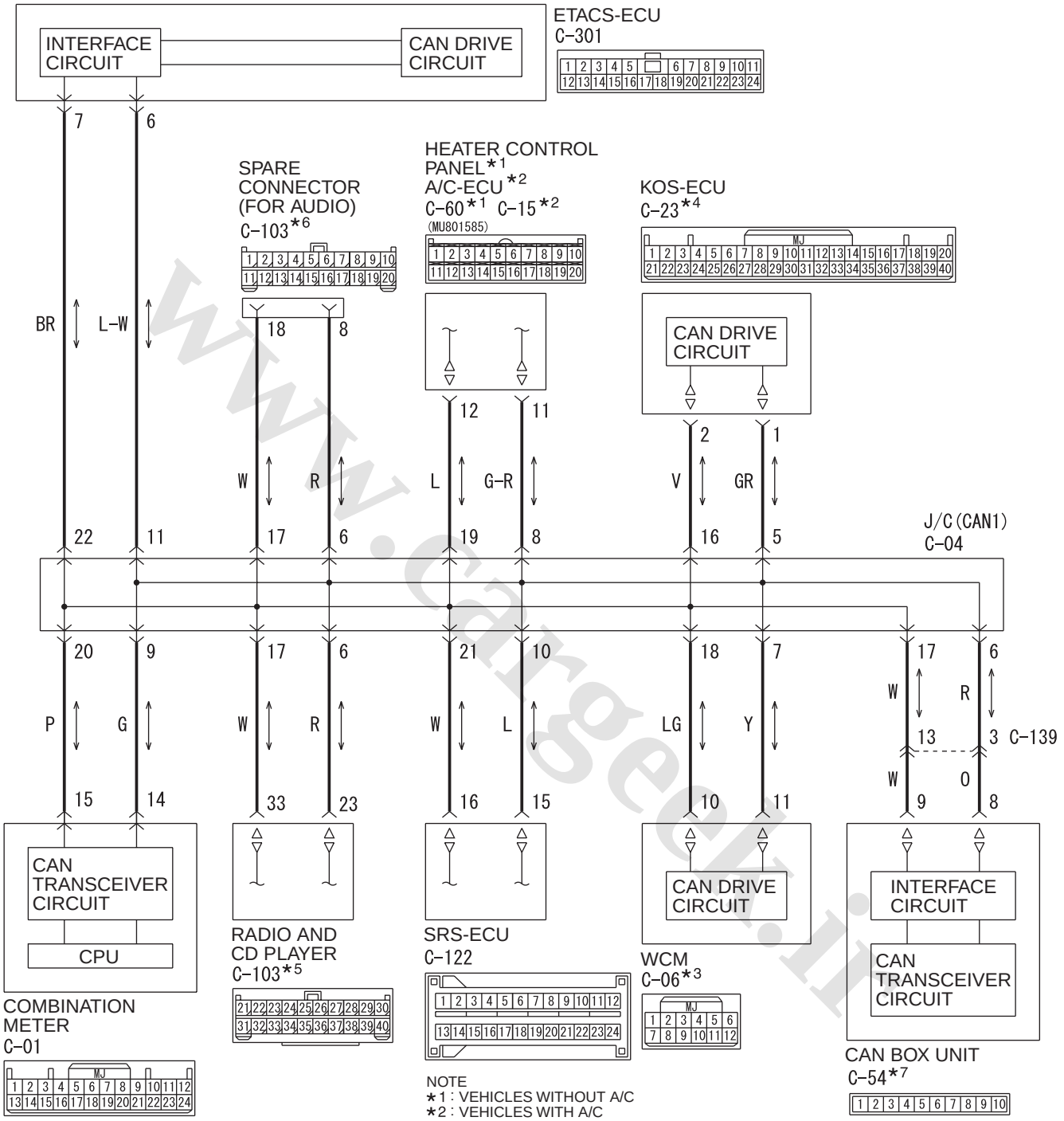

NOTE
*1 : VEHICLES WITHOUT A/C
*2 : VEHICLES WITH A/C
*3 : VEHICLES WITH WCM
*4 : VEHICLES WITH KOS
*5 : VEHICLES WITH RADIO AND CD PLAYER
*6 : VEHICLES WITHOUT AUDIO
*7 : VEHICLES WITH MMCS

Wire colour code
B : Black LG : Light green G : Green L : Blue W : White Y : Yellow SB : Sky blue
BR : Brown O : Orange GR : Grey R : Red P : Pink V : Violet PU : Purple SI : Silver

WDH54E016A

www.cargeek.ir

www.CarGeek.ir

Connectors: C-01, C-04 <LHD>

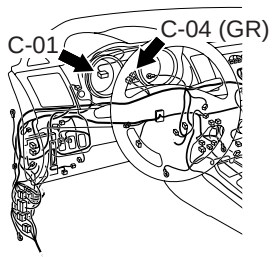

ACB02645AP

Connectors: C-01, C-04 <RHD>

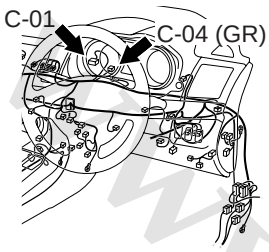

ACB02647AM

FUNCTION

If the M.U.T.-III cannot communicate with the combination meter, this diagnosis result will be set.

TROUBLE JUDGEMENT CONDITIONS

If a communication flag is not set for the combination meter, the ETACS-ECU determines that there is a failure.

TROUBLESHOOTING HINTS

- Malfunction of the connector [joint connector (CAN1) or combination meter connector improperly connected]
- Malfunction of the wiring harness [open circuit between the combination meter connector and the joint connector (CAN1), or power supply circuit to the combination meter]
- Malfunction of the combination meter

DIAGNOSIS PROCEDURE

STEP 1. Connector check: C-04 joint connector (CAN1) and C-01 combination meter connector

⚠ CAUTION

The strand end of the twist wire should be within 10 cm from the connector. For details refer to .

Q: Is the check result normal?

YES : Go to Step 2.

NO : Repair the defective connector.

STEP 2. Check the wiring harness between C-01 combination meter connector and C-04 joint connector (CAN1)

⚠ CAUTION

Strictly observe the specified wiring harness repair procedure. For details refer to .

Disconnect combination meter connector and joint connector (CAN1), and check the following wiring harness for open circuit

(1) The wiring harness between C-01 combination meter connector terminal No.14 and C-04 joint connector (CAN1) terminal No.9 <CAN_H>

OK: Continuity exists (2 Ω or less)

(2) The wiring harness between C-01 combination meter connector terminal No.15 and C-04 joint connector (CAN1) terminal No.20 <CAN_L>

OK: Continuity exists (2 Ω or less)

Q: Is the check result normal?

YES : Check the power supply circuit of the combination meter. Refer to GROUP 54A – Combination meter – Troubleshooting .

NO : Repair the wiring harness.

www.cargeek.ir

www.CarGeek.ir

Diagnosis Item 21: Diagnose when the M.U.T.-III cannot receive the data sent by radio and CD player <vehicles with radio and CD player>

⚠ CAUTION

When servicing a CAN bus line, earth yourself by touching a metal object such as an unpainted water pipe. If you fail to do, a component connected to the CAN bus line may be broken.

www.cargeek.ir

www.cargeek.ir

www.CarGeek.ir

CAN-B Communication Circuit

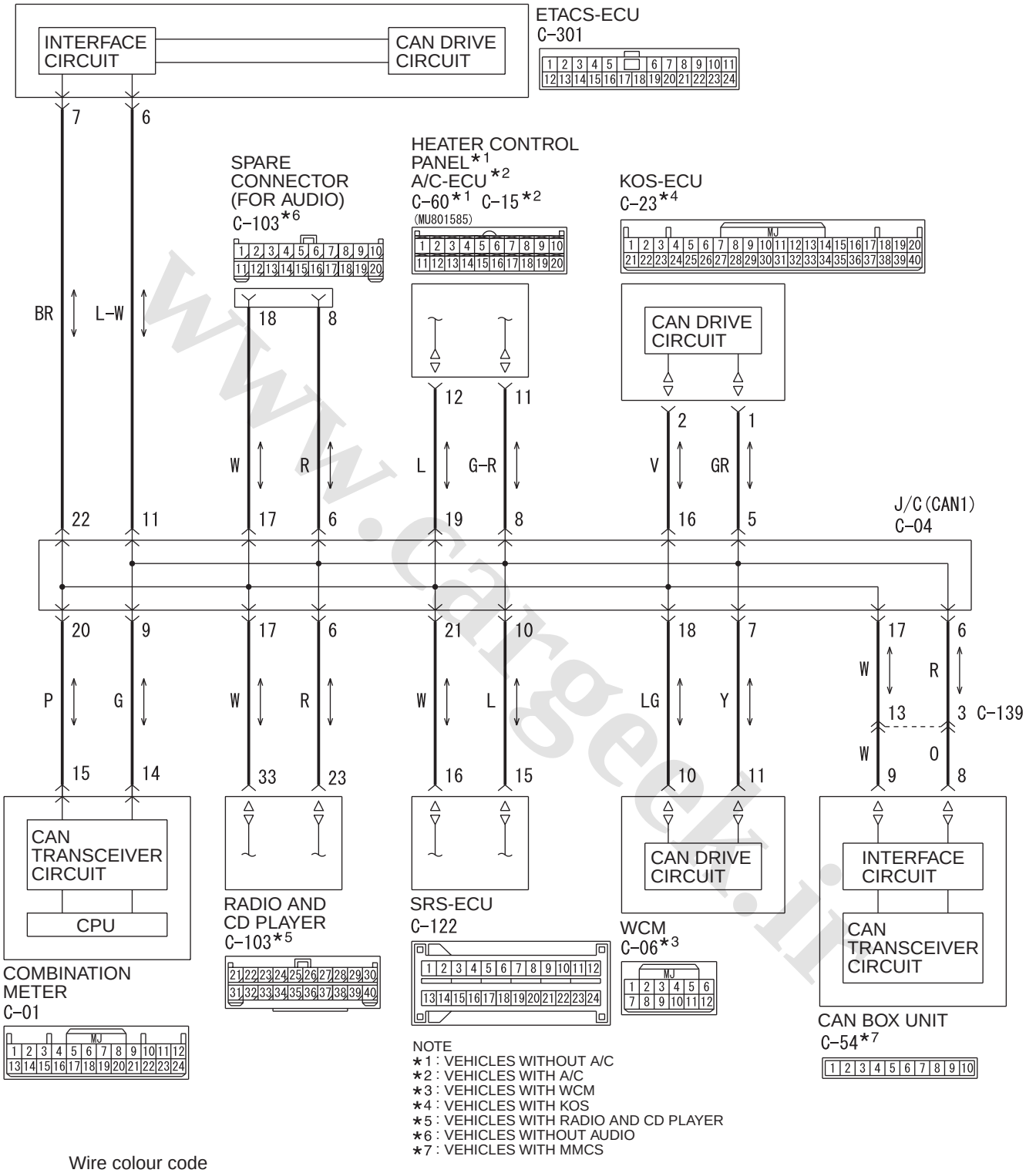

NOTE
*1 : VEHICLES WITHOUT A/C
*2 : VEHICLES WITH A/C
*3 : VEHICLES WITH WCM
*4 : VEHICLES WITH KOS
*5 : VEHICLES WITH RADIO AND CD PLAYER
*6 : VEHICLES WITHOUT AUDIO
*7 : VEHICLES WITH MMCS

Wire colour code
B : Black LG : Light green G : Green L : Blue W : White Y : Yellow SB : Sky blue
BR : Brown O : Orange GR : Grey R : Red P : Pink V : Violet PU : Purple SI : Silver

WDH54E016A

www.cargeek.ir

www.CarGeek.ir

Connector: C-04 <LHD>

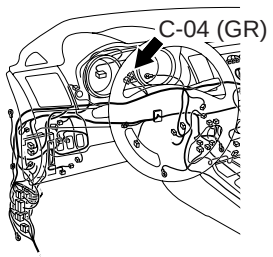

ACB02645AL

Connectors: C-04, C-103 <RHD>

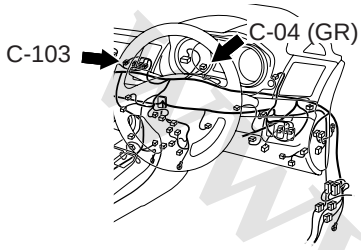

ACB02647AN

Connector: C-103 <LHD>

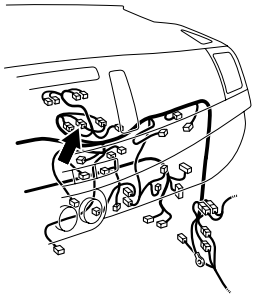

AC709894AH

FUNCTION

If the M.U.T.-III cannot communicate with the radio and CD player, this diagnosis result will be set.

TROUBLE JUDGMENT CONDITIONS

If a communication flag is not set for the radio and CD player, the ETACS-ECU determines that there is a failure.

TROUBLESHOOTING HINTS

- Malfunction of the connector [joint connector (CAN1) or radio and CD player connector improperly connected]
- Malfunction of the wiring harness [open circuit between the radio and CD player connector and the joint connector (CAN1), power supply circuit of the radio and CD player]
- Malfunction of the radio and CD player

DIAGNOSIS PROCEDURE

STEP 1. Connector check: C-04 joint connector (CAN1) and C-103 radio and CD player connector

⚠ CAUTION

The strand end of the twist wire should be within 10 cm from the connector. For details refer to .

Q: Is the check result normal?

YES : Go to Step 2.

NO : Repair the defective connector.

STEP 2. Check the wiring harness between C-103 radio and CD player connector and C-04 joint connector (CAN1)

⚠ CAUTION

Strictly observe the specified wiring harness repair procedure. For details refer to .

Disconnect radio and CD player connector and joint connector (CAN1), and check the following wiring harness for open circuit

(1) The wiring harness between C-103 radio and CD player connector terminal No.23 and C-04 joint connector (CAN1) terminal No.6 <CAN_H>

OK: Continuity exists (2 Ω or less)

(2) The wiring harness between C-103 radio and CD player connector terminal No.33 and C-04 joint connector (CAN1) terminal No.17 <CAN_L>

OK: Continuity exists (2 Ω or less)

Q: Is the check result normal?

YES : Check the power supply circuit of the radio and CD player. Refer to GROUP 54A – Radio and CD player – Troubleshooting .

NO : Repair the wiring harness.

www.cargeek.ir

www.CarGeek.ir

Diagnosis Item 22: Diagnose when the M.U.T.-III cannot receive the data sent by AS&G-ECU <vehicles with automatic stop & go (AS&G) system>

⚠ CAUTION

When servicing a CAN bus line, earth yourself by touching a metal object such as an unpainted water pipe. If you fail to do, a component connected to the CAN bus line may be broken.

www.cargeek.ir

www.cargeek.ir

www.CarGeek.ir

CAN-B Communication Circuit

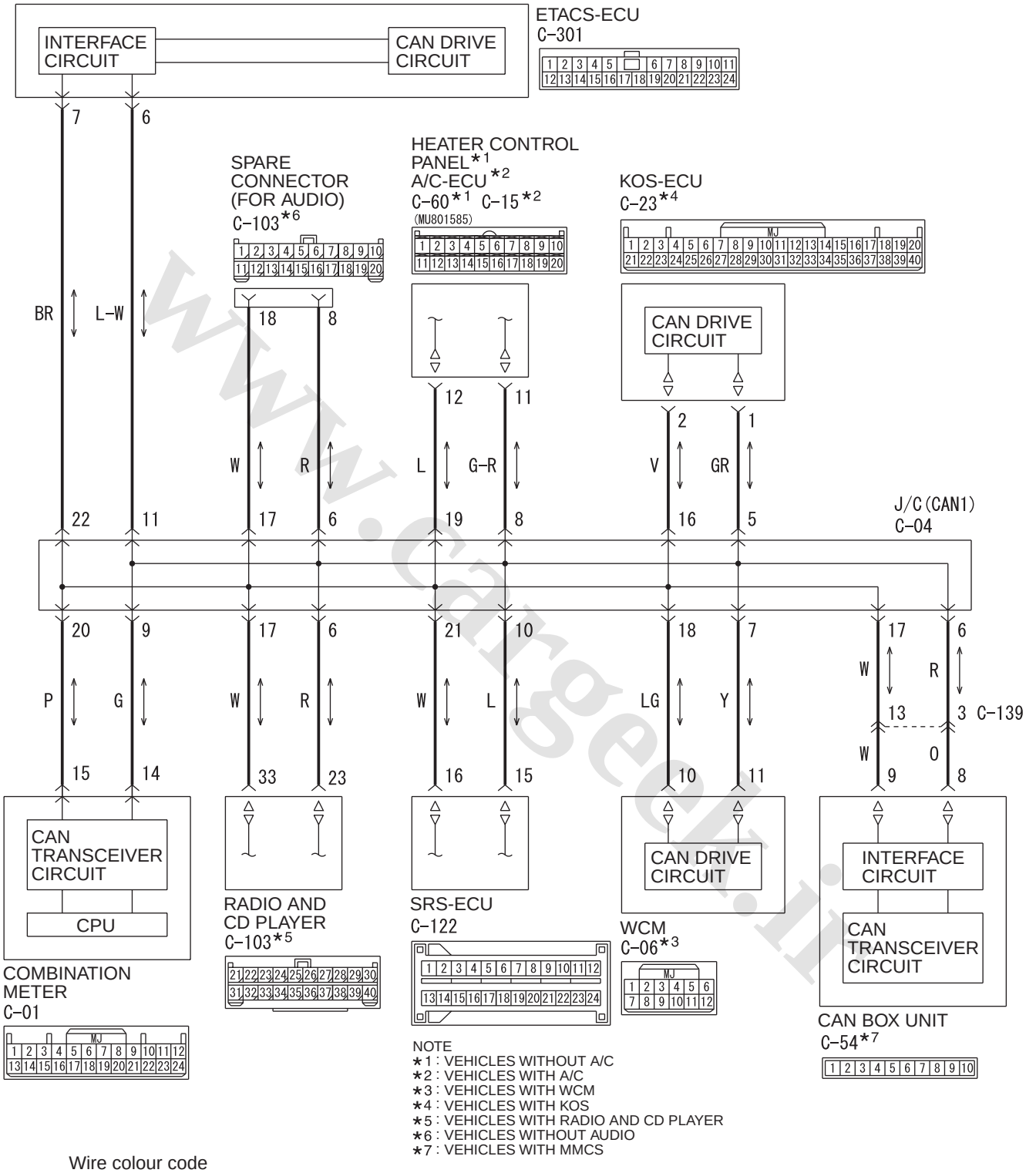

www.cargeek.ir

www.CarGeek.ir

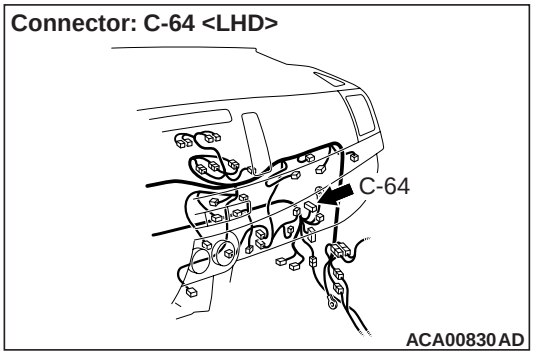

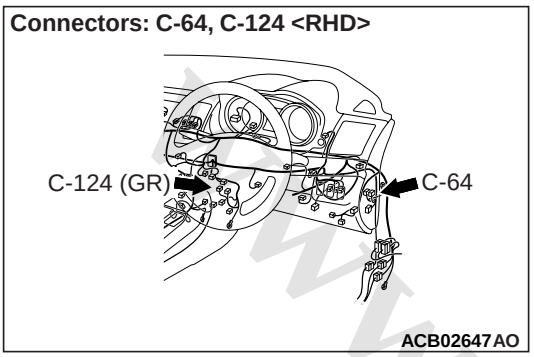

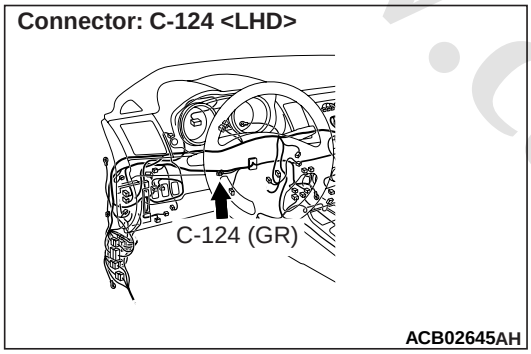

FUNCTION

If the M.U.T.-III cannot communicate with the AS&G-ECU, this diagnosis result will be set.

TROUBLE JUDGMENT CONDITIONS

If a communication flag is not set for the AS&G-ECU, the ETACS-ECU determines that there is a failure.

TROUBLESHOOTING HINTS

- Malfunction of the connector [joint connector (CAN3) or AS&G-ECU connector improperly connected]
- Malfunction of the wiring harness [open circuit between the AS&G-ECU and the joint connector (CAN3), power supply circuit to the AS&G-ECU]
- Malfunction of the AS&G-ECU

DIAGNOSIS PROCEDURE

STEP 1. Connector check: C-04 joint connector (CAN1) and C-64 AS&G-ECU connector

⚠ CAUTION

The strand end of the twist wire should be within 10 cm from the connector. For details refer to .

Q: Is the check result normal?

YES : Go to Step 2.

NO : Repair the defective connector.

STEP 2. Check the wiring harness between C-64 AS&G-ECU connector and C-124 joint connector (CAN1)

⚠ CAUTION

Strictly observe the specified wiring harness repair procedure. For details refer to .

Disconnect hands AS&G-ECU connector and joint connector (CAN1), and check the continuity of the following wiring harness.

(1) The wiring harness between C-64 AS&G-ECU connector terminal No.1 and C-124 joint connector (CAN3) terminal No.17 <Diesel> or 16 <Petrol> <CAN_H>

OK: Continuity exists (2 Ω or less)

(2) The wiring harness between C-64 AS&G-ECU connector terminal No.14 and C-124 joint connector (CAN3) terminal No.6 <Diesel> or 5 <Petrol> <CAN_L>

OK: Continuity exists (2 Ω or less)

Q: Is the check result normal?

YES : Check the power supply circuit of the hands free-ECU. Refer to GROUP 17 – automatic stop & go (AS&G) system – Troubleshooting .

NO : Repair the wiring harness.

www.cargeek.ir

www.CarGeek.ir

Diagnosis Item 23: Short to power supply or earth in both CAN_H and CAN_L lines of the CAN-B bus lines.

⚠ CAUTION

When servicing a CAN bus line, earth yourself by touching a metal object such as an unpainted water pipe. If you fail to do, a component connected to the CAN bus line may be broken.

www.cargeek.ir

www.cargeek.ir

www.CarGeek.ir

CAN-B Communication Circuit

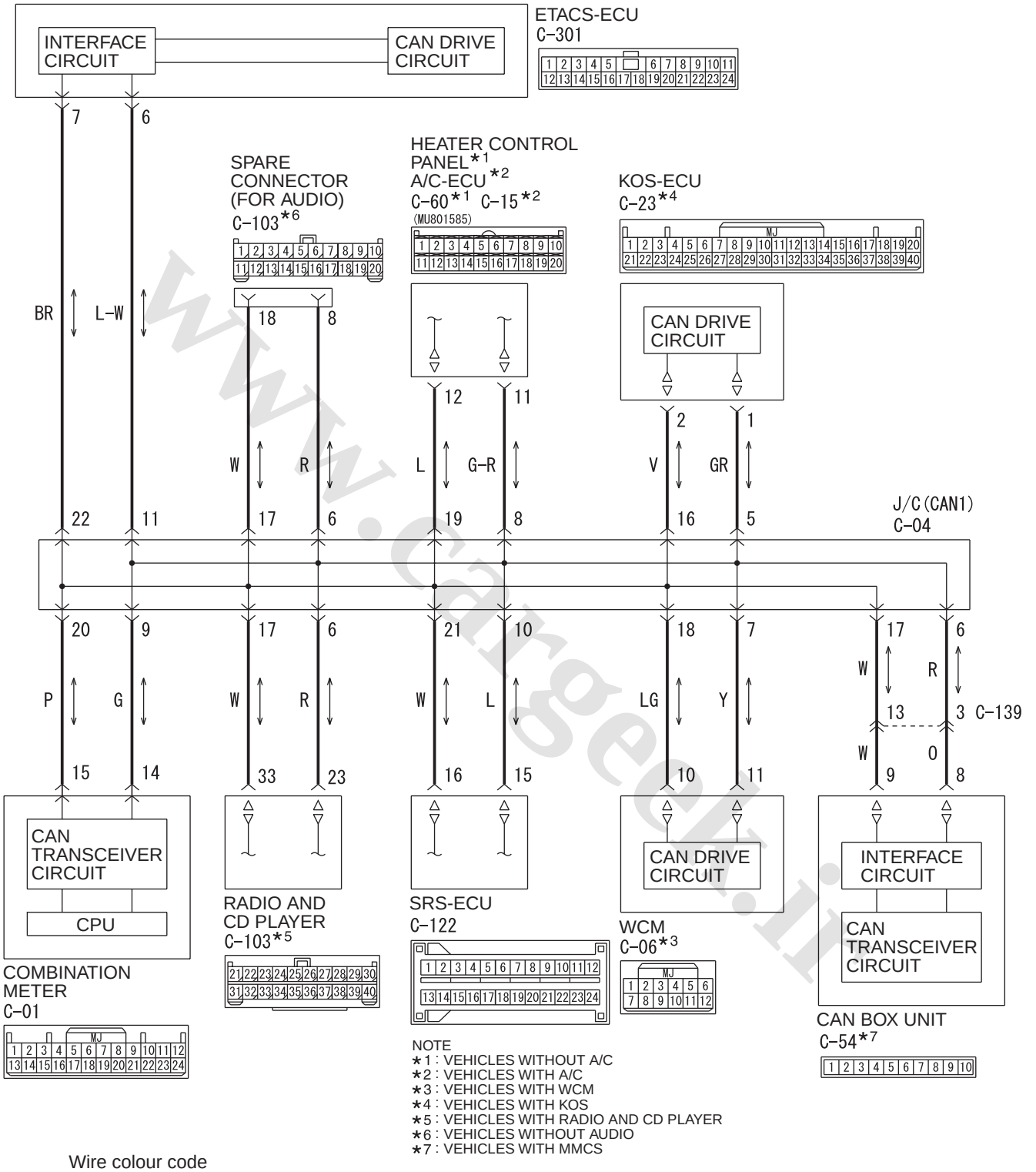

NOTE
*1 : VEHICLES WITHOUT A/C
*2 : VEHICLES WITH A/C
*3 : VEHICLES WITH WCM
*4 : VEHICLES WITH KOS
*5 : VEHICLES WITH RADIO AND CD PLAYER
*6 : VEHICLES WITHOUT AUDIO
*7 : VEHICLES WITH MMCS

Wire colour code
B : Black LG : Light green G : Green L : Blue W : White Y : Yellow SB : Sky blue
BR : Brown O : Orange GR : Grey R : Red P : Pink V : Violet PU : Purple SI : Silver

WDH54E016A

www.cargeek.ir

www.CarGeek.ir

Connectors: C-01, C-04, C-06, C-23, C-32, C-122 <LHD>

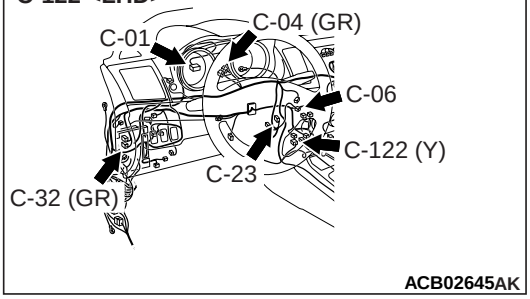

Connectors: C-01, C-04, C-06, C-23, C-103, C-122, C-139 <RHD>

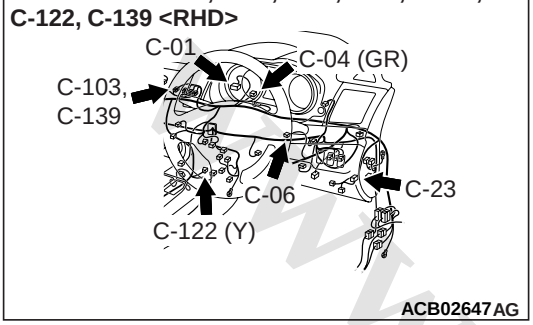

Connectors: C-15, C-54, C-60, C-103, C-139 <LHD>

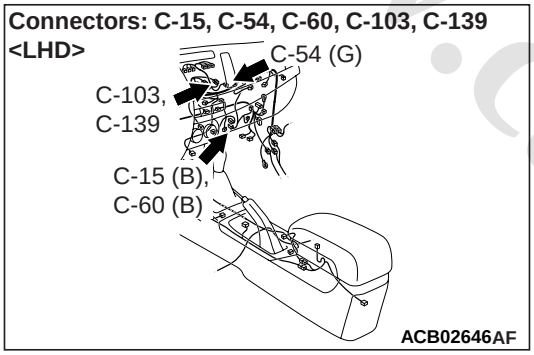

Connector: C-15<RHD>

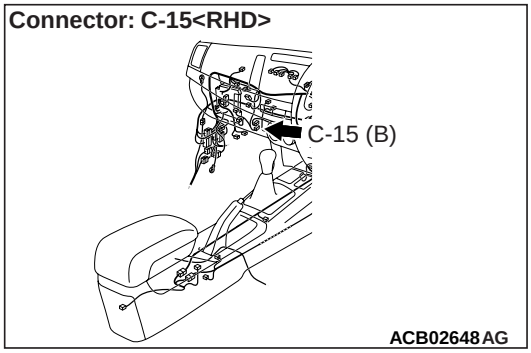

Connector: C-301 <LHD>

ETACS-ECU

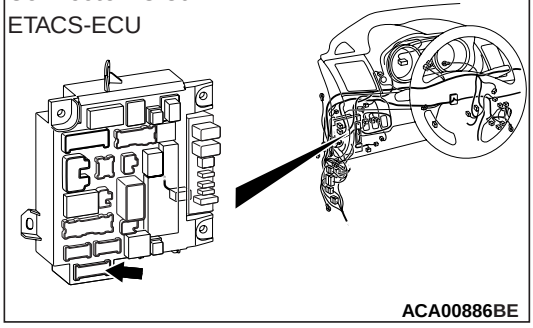

Connector: C-301 <RHD>

ETACS-ECU

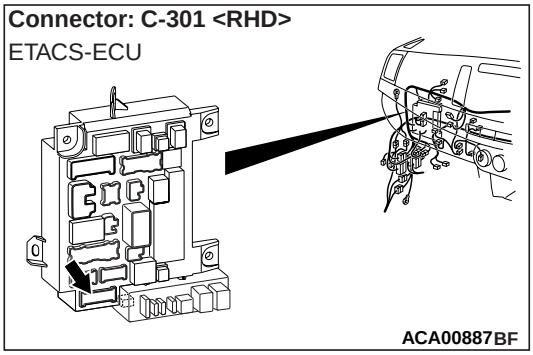

FUNCTION

If a short to power supply or earth is present in both CAN_H and CAN_L lines, this diagnosis result will be set.

TROUBLE JUDGEMENT CONDITIONS

If a communication flag is set for ETACS-ECU and no communication is present through the CAN-B line, or diagnosis code U0019 is set in the ETACS-ECU, ETACS-ECU determines that there is a failure.

TROUBLESHOOTING HINTS

- Malfunction of the connector (ETACS-ECU connector improperly connected)
- Malfunction of the wiring harness (CAN_H and CAN_L lines are short to power supply or earth on the CAN-B line.)
- Malfunction of ECUs

DIAGNOSIS PROCEDURE

STEP 1. Checking short to power supply (voltage measurement)

⚠ CAUTION

- **A digital multimeter should be used. For details refer to .**
- **The test wiring harness should be used. For details refer to .**

(1) Disconnect C-301 ETACS-ECU connector, and measure at the wiring harness side.
(2) Turn the ignition switch to the ON position.
(3) Measure the voltage between C-301 ETACS-ECU connector terminal No.6 and body earth.

OK: 5 V or less

(4) Measure the voltage between C-301 ETACS-ECU connector terminal No.7 and body earth.

OK: 5 V or less

Q: Is the check result normal?
YES : Go to Step 2.
NO : Go to Step 11.

www.cargeek.ir

www.CarGeek.ir

STEP 2. Check the wiring harness between C-122 SRS-ECU connector and C-04 joint connector (CAN1) for short to earth (resistance measurement).

⚠ CAUTION

- **Disconnect the negative battery terminal. For details refer to .**
- **A digital multimeter should be used. For details refer to .**
- **The test wiring harness should be used. For details refer to .**

(1) Disconnect joint connector (CAN1), and measure at the wiring harness side.
(2) Measure the resistance between C-04 joint connector (CAN1) terminal No.10 and body earth.

OK: 1 kΩ or more

(3) Measure the resistance between C-04 joint connector (CAN1) terminal No.21 and body earth.

OK: 1 kΩ or more

Q: Is the check result normal?
YES : Go to Step 3.
NO : Go to Step 20.

STEP 3. Check the wiring harness between C-60 heater control unit connector <vehicles without A/C> or C-15 A/C-ECU connector <vehicles with A/C> connector and C-04 joint connector (CAN1) for short to earth (resistance measurement).

⚠ CAUTION

- **Disconnect the negative battery terminal. For details refer to .**
- **A digital multimeter should be used. For details refer to .**
- **The test wiring harness should be used. For details refer to .**

(1) Disconnect joint connector (CAN1), and measure at the wiring harness side.
(2) Measure the resistance between C-04 joint connector (CAN1) terminal No.8 and body earth.

OK: 1 kΩ or more

(3) Measure the resistance between C-04 joint connector (CAN1) terminal No.19 and body earth.

OK: 1 kΩ or more

Q: Is the check result normal?
YES : Go to Step 4.
NO : Go to Step 21.

STEP 4. Check the wiring harness between C-01 combination meter connector and C-04 joint connector (CAN1) for short to earth (resistance measurement).

⚠ CAUTION

- **Disconnect the negative battery terminal. For details refer to .**
- **A digital multimeter should be used. For details refer to .**
- **The test wiring harness should be used. For details refer to .**

(1) Disconnect joint connector (CAN1), and measure at the wiring harness side.
(2) Measure the resistance between C-04 joint connector (CAN1) terminal No.9 and body earth.

OK: 1 kΩ or more

(3) Measure the resistance between C-04 joint connector (CAN1) terminal No.20 and body earth.

OK: 1 kΩ or more

Q: Is the check result normal?
YES <vehicles without KOS> : Go to Step 5.
YES <vehicles with KOS> : Go to Step 6.
NO (the check result is not normal.) : Go to Step 22.

STEP 5. Check the wiring harness between C-06 WCM connector and C-04 joint connector (CAN1) for short to earth (resistance measurement).

⚠ CAUTION

- **Disconnect the negative battery terminal. For details refer to .**
- **A digital multimeter should be used. For details refer to .**
- **The test wiring harness should be used. For details refer to .**

(1) Disconnect joint connector (CAN1), and measure at the wiring harness side.
(2) Measure the resistance between C-04 joint connector (CAN1) terminal No.7 and body earth.

OK: 1 kΩ or more

(3) Measure the resistance between C-04 joint connector (CAN1) terminal No.18 and body earth.

OK: 1 kΩ or more

Q: Is the check result normal?

www.cargeek.ir

www.CarGeek.ir

YES <vehicles with radio and CD player> : Go to Step 7.
YES <vehicles with MMCS (vehicles for Russia)> : Go to Step 8.
YES <vehicles without MMCS and without radio and CD player> : Go to Step 9.
NO (the check result is not normal.) : Go to Step 23.

STEP 6. Check the wiring harness between C-23 KOS-ECU connector and C-04 joint connector (CAN1) for short to earth (resistance measurement).

⚠ CAUTION

- **Disconnect the negative battery terminal. For details refer to .**
- **A digital multimeter should be used. For details refer to .**
- **The test wiring harness should be used. For details refer to .**

(1) Disconnect joint connector (CAN1), and measure at the wiring harness side.
(2) Measure the resistance between C-04 joint connector (CAN1) terminal No.5 and body earth.

OK: 1 kΩ or more

(3) Measure the resistance between C-04 joint connector (CAN1) terminal No.16 and body earth.

OK: 1 kΩ or more

Q: Is the check result normal?
YES <vehicles with radio and CD player> : Go to Step 7.
YES <vehicles with MMCS (vehicles for Russia)> : Go to Step 8.
YES <vehicles without MMCS and without radio and CD player> : Go to Step 9.
NO (the check result is not normal.) : Go to Step 24.

STEP 7. Check the wiring harness between C-103 radio and CD player connector and C-04 joint connector (CAN1) for short to earth (resistance measurement).

⚠ CAUTION

- **Disconnect the negative battery terminal. For details refer to .**
- **A digital multimeter should be used. For details refer to .**
- **The test wiring harness should be used. For details refer to .**

(1) Disconnect joint connector (CAN1), and measure at the wiring harness side.
(2) Measure the resistance between C-04 joint connector (CAN1) terminal No.6 and body earth.

OK: 1 kΩ or more

(3) Measure the resistance between C-04 joint connector (CAN1) terminal No.17 and body earth.

OK: 1 kΩ or more

Q: Is the check result normal?
YES : Go to Step 10.
NO : Go to Step 25.

STEP 8. Check the wiring harness between C-54 CAN box unit connector and C-04 joint connector (CAN1) for short to earth (resistance measurement).

⚠ CAUTION

- **Disconnect the negative battery terminal. For details refer to .**
- **A digital multimeter should be used. For details refer to .**
- **The test wiring harness should be used. For details refer to .**

(1) Disconnect joint connector (CAN1), and measure at the wiring harness side.
(2) Measure the resistance between C-04 joint connector (CAN1) terminal No.6 and body earth.

OK: 1 kΩ or more

(3) Measure the resistance between C-04 joint connector (CAN1) terminal No.17 and body earth.

OK: 1 kΩ or more

Q: Is the check result normal?
YES : Go to Step 10.
NO : Go to Step 26.

STEP 9. Check the wiring harness between C-103 spare connector (for audio) and C-04 joint connector (CAN1) for short to earth (resistance measurement).

⚠ CAUTION

- **Disconnect the negative battery terminal. For details refer to .**
- **A digital multimeter should be used. For details refer to .**
- **The test wiring harness should be used. For details refer to .**

(1) Disconnect joint connector (CAN1), and measure at the wiring harness side.
(2) Measure the resistance between C-04 joint

www.cargeek.ir

www.CarGeek.ir

connector (CAN1) terminal No.6 and body earth.

OK: 1 kΩ or more

(3) Measure the resistance between C-04 joint connector (CAN1) terminal No.17 and body earth.

OK: 1 kΩ or more

Q: Is the check result normal?
YES : Go to Step 10.
NO : Repair the wiring harness between C-103 spare connector (for audio) and C-04 joint connector (CAN1).

STEP 10. Check the wiring harness between C-301 ETACS-ECU connector and C-04 joint connector (CAN1) for short to earth (resistance measurement).

⚠ CAUTION

- **Disconnect the negative battery terminal. For details refer to .**
- **A digital multimeter should be used. For details refer to .**
- **The test wiring harness should be used. For details refer to .**
- **Strictly observe the specified wiring harness repair procedure. For details refer to .**

(1) Disconnect ETACS-ECU connector and joint connector (CAN1), and measure at the wiring harness side.
(2) Measure the resistance between C-04 joint connector (CAN1) terminal No.11 and body earth.

OK: 1 kΩ or more

(3) Measure the resistance between C-04 joint connector (CAN1) terminal No.22 and body earth.

OK: 1 kΩ or more

Q: Is the check result normal?
YES : Go to Step 27.
NO : Repair the wiring harness between C-301 ETACS-ECU connector and C-04 joint connector (CAN1).

STEP 11. Check the wiring harness between C-122 SRS connector and C-04 joint connector (CAN1) for short to power supply (voltage measurement).

⚠ CAUTION

- **A digital multimeter should be used. For details refer to .**
- **The test wiring harness should be used. For details refer to .**

(1) Disconnect joint connector (CAN1), and measure at the wiring harness side.
(2) Turn the ignition switch to the ON position.
(3) Measure the voltage between C-04 joint connector (CAN1) terminal No.10 and body earth.

OK: 5 V or less

(4) Measure the voltage between C-04 joint connector (CAN1) terminal No.21 and body earth.

OK: 5 V or less

Q: Is the check result normal?
YES : Go to Step 12.
NO : Go to Step 20.

STEP 12. Check the wiring harness between C-60 heater control unit connector <vehicles without A/C> or C-15 A/C-ECU connector <vehicles with A/C> and C-04 joint connector (CAN1) for short to power supply (voltage measurement).

⚠ CAUTION

- **A digital multimeter should be used. For details refer to .**
- **The test wiring harness should be used. For details refer to .**

(1) Disconnect joint connector (CAN1), and measure at the wiring harness side.
(2) Turn the ignition switch to the ON position.
(3) Measure the voltage between C-04 joint connector (CAN1) terminal No.8 and body earth.

OK: 5 V or less

(4) Measure the voltage between C-04 joint connector (CAN1) terminal No.19 and body earth.

OK: 5 V or less

Q: Is the check result normal?
YES : Go to Step 13.
NO : Go to Step 21.

www.cargeek.ir

www.CarGeek.ir

STEP 13. Check the wiring harness between C-01 combination meter connector and C-04 joint connector (CAN1) for short to power supply (voltage measurement).

⚠ CAUTION

- **A digital multimeter should be used. For details refer to .**
- **The test wiring harness should be used. For details refer to .**

(1) Disconnect joint connector (CAN1), and measure at the wiring harness side.
(2) Turn the ignition switch to the ON position.
(3) Measure the voltage between C-04 joint connector (CAN1) terminal No.9 and body earth.

OK: 5 V or less

(4) Measure the voltage between C-04 joint connector (CAN1) terminal No.20 and body earth.

OK: 5 V or less

Q: Is the check result normal?
YES <vehicles without KOS> : Go to Step 14.
YES <vehicles with KOS> : Go to Step 15.
NO (the check result is not normal.) : Go to Step 22.

STEP 14. Check the wiring harness between C-06 WCM connector and C-04 joint connector (CAN1) for short to power supply (voltage measurement).

⚠ CAUTION

- **A digital multimeter should be used. For details refer to .**
- **The test wiring harness should be used. For details refer to .**

(1) Disconnect joint connector (CAN1), and measure at the wiring harness side.
(2) Turn the ignition switch to the ON position.
(3) Measure the voltage between C-04 joint connector (CAN1) terminal No.7 and body earth.

OK: 5 V or less

(4) Measure the voltage between C-04 joint connector (CAN1) terminal No.18 and body earth.

OK: 5 V or less

Q: Is the check result normal?
YES <vehicles with radio and CD player> : Go to Step 16.
YES <vehicles with MMCS (vehicles for Russia)> : Go to Step 17.
YES <vehicles without MMCS and without radio and CD player> : Go to Step 18.
NO (the check result is not normal.) : Go to Step 23.

STEP 15. Check the wiring harness between C-23 KOS-ECU connector and C-04 joint connector (CAN1) for short to power supply (voltage measurement).

⚠ CAUTION

- **A digital multimeter should be used. For details refer to .**
- **The test wiring harness should be used. For details refer to .**

(1) Disconnect joint connector (CAN1), and measure at the wiring harness side.
(2) Turn the ignition switch to the ON position.
(3) Measure the voltage between C-04 joint connector (CAN1) terminal No.5 and body earth.

OK: 5 V or less

(4) Measure the voltage between C-04 joint connector (CAN1) terminal No.16 and body earth.

OK: 5 V or less

Q: Is the check result normal?
YES <vehicles with radio and CD player> : Go to Step 16.
YES <vehicles with MMCS (vehicles for Russia)> : Go to Step 17.
YES <vehicles without MMCS and without radio and CD player> : Go to Step 18.
NO (the check result is not normal.) : Go to Step 24.

STEP 16. Check the wiring harness between C-103 radio and CD player connector and C-04 joint connector (CAN1) for short to power supply (voltage measurement).

⚠ CAUTION

- **A digital multimeter should be used. For details refer to .**
- **The test wiring harness should be used. For details refer to .**

(1) Disconnect joint connector (CAN1), and measure at the wiring harness side.
(2) Turn the ignition switch to the ON position.
(3) Measure the voltage between C-04 joint

www.cargeek.ir

www.CarGeek.ir

connector (CAN1) terminal No.6 and body earth.

OK: 5 V or less

(4) Measure the voltage between C-04 joint connector (CAN1) terminal No.17 and body earth.

OK: 5 V or less

Q: Is the check result normal?
YES : Go to Step 19.
NO : Go to Step 25.

STEP 17. Check the wiring harness between C-54 CAN box unit connector and C-04 joint connector (CAN1) for short to power supply (voltage measurement).

⚠ CAUTION
- **A digital multimeter should be used. For details refer to .**
- **The test wiring harness should be used. For details refer to .**

(1) Disconnect joint connector (CAN1), and measure at the wiring harness side.
(2) Turn the ignition switch to the ON position.
(3) Measure the voltage between C-04 joint connector (CAN1) terminal No.6 and body earth.

OK: 5 V or less

(4) Measure the voltage between C-04 joint connector (CAN1) terminal No.17 and body earth.

OK: 5 V or less

Q: Is the check result normal?
YES : Go to Step 19.
NO : Go to Step 26.

STEP 18. Check the wiring harness between C-103 spare connector (for audio) and C-04 joint connector (CAN1) for short to power supply (voltage measurement).

⚠ CAUTION
- **A digital multimeter should be used. For details refer to .**
- **The test wiring harness should be used. For details refer to .**

(1) Disconnect joint connector (CAN1), and measure at the wiring harness side.
(2) Turn the ignition switch to the ON position.
(3) Measure the voltage between C-04 joint connector (CAN1) terminal No.6 and body earth.

OK: 5 V or less

(4) Measure the voltage between C-04 joint connector (CAN1) terminal No.17 and body earth.

OK: 5 V or less

Q: Is the check result normal?
YES : Go to Step 19.
NO : Repair the wiring harness between C-103 spare connector (for audio) and C-04 joint connector (CAN1).

STEP 19. Check the wiring harness between C-301 ETACS-ECU connector and C-04 joint connector (CAN1) for short to power supply (voltage measurement).

⚠ CAUTION
- **A digital multimeter should be used. For details refer to .**
- **The test wiring harness should be used. For details refer to .**
- **Strictly observe the specified wiring harness repair procedure. For details refer to .**

(1) Disconnect ETACS-ECU connector and joint connector (CAN1), and measure at the wiring harness side.
(2) Turn the ignition switch to the ON position.
(3) Measure the voltage between C-04 joint connector (CAN1) terminal No.11 and body earth.

OK: 1 V or less

(4) Measure the voltage between C-04 joint connector (CAN1) terminal No.22 and body earth.

OK: 1 V or less

Q: Is the check result normal?
YES : Go to Step 27.
NO : Repair the wiring harness between C-301 ETACS-ECU connector and C-04 joint connector (CAN1).

www.cargeek.ir

www.CarGeek.ir

STEP 20. M.U.T.-III CAN bus diagnostics (checking the SRS-ECU for internal failure)

⚠ CAUTION

Strictly observe the specified wiring harness repair procedure. For details refer to .

Disconnect C-122 SRS-ECU connector, and diagnose the CAN bus line.

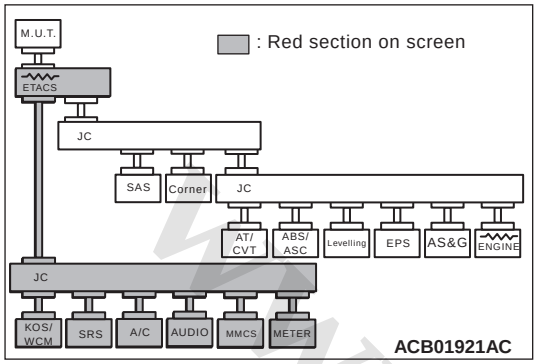

OK: The display of the M.U.T.-III is as shown in the figure.

Q: Does M.U.T.-III screen correspond to the illustration?

YES : Repair the wiring harness between C-122 SRS-ECU connector and C-04 joint connector (CAN1).

NO : Check the SRS-ECU connector, and repair if necessary. If the SRS-ECU connector is in good condition, replace the SRS-ECU.

STEP 21. M.U.T.-III CAN bus diagnostics (checking the heater control unit <vehicles without A/C> or A/C-ECU <vehicles with A/C> for internal failure)

⚠ CAUTION

Strictly observe the specified wiring harness repair procedure. For details refer to .

Disconnect C-60 heater control unit connector <vehicles without A/C> or C-15 A/C-ECU connector <vehicles with A/C> connector, and diagnose the CAN bus line.

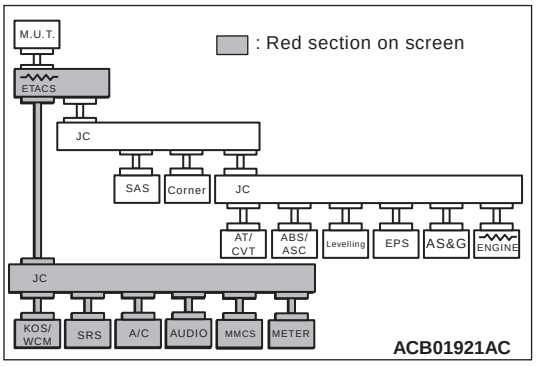

OK: The display of the M.U.T.-III is as shown in the figure.

Q: Does M.U.T.-III screen correspond to the illustration?

YES : Repair the wiring harness between C-60 heater control unit connector <vehicles without A/C> or C-15 A/C-ECU connector <vehicles with A/C> and C-04 joint connector (CAN1).

NO : Check the heater control unit connector <vehicles without A/C> or A/C-ECU connector <vehicles with A/C> connector, and repair if necessary. If the heater control unit connector <vehicles without A/C> or A/C-ECU connector <vehicles with A/C> is in good condition, replace the heater control unit <vehicles without A/C> or A/C-ECU <vehicles with A/C>.

www.cargeek.ir

www.CarGeek.ir

STEP 22. M.U.T.-III CAN bus diagnostics (checking the combination meter for internal failure)

⚠ CAUTION

Strictly observe the specified wiring harness repair procedure. For details refer to .

Disconnect C-01 combination meter connector, and diagnose the CAN bus line.

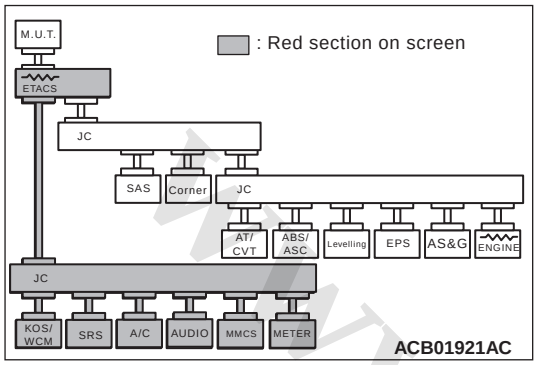

OK: The display of the M.U.T.-III is as shown in the figure.

Q: Does M.U.T.-III screen correspond to the illustration?

YES : Repair the wiring harness between C-01 combination meter connector and C-04 joint connector (CAN1).

NO : Check the combination meter connector, and repair if necessary. If the combination meter connector is in good condition, replace the combination meter.

STEP 23. M.U.T.-III CAN bus diagnostics (checking the WCM for internal failure)

⚠ CAUTION

Strictly observe the specified wiring harness repair procedure. For details refer to .

Disconnect C-06 WCM connector, and diagnose the CAN bus line.

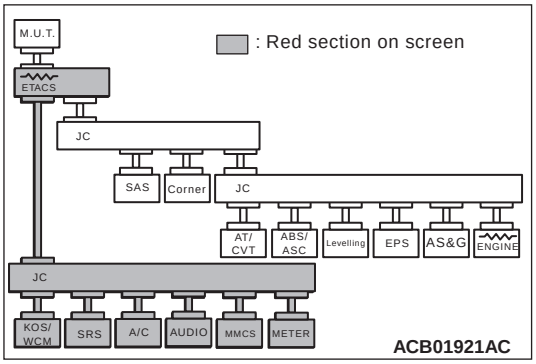

OK: The display of the M.U.T.-III is as shown in the figure.

Q: Does M.U.T.-III screen correspond to the illustration?

YES : Repair the wiring harness between C-06 WCM connector and C-04 joint connector (CAN1).

NO : Check the WCM connector, and repair if necessary. If the WCM connector is in good condition, replace the WCM.

STEP 24. M.U.T.-III CAN bus diagnostics (checking the KOS-ECU for internal failure)

⚠ CAUTION

Strictly observe the specified wiring harness repair procedure. For details refer to .

Disconnect C-23 KOS-ECU connector, and diagnose the CAN bus line.

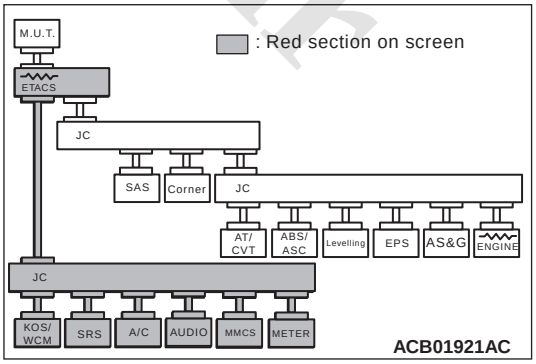

OK: The display of the M.U.T.-III is as shown in the figure.

Q: Does M.U.T.-III screen correspond to the illustration?

www.cargeek.ir

www.CarGeek.ir

YES : Repair the wiring harness between C-23 KOS-ECU connector and C-04 joint connector (CAN1).

NO : Check the KOS-ECU connector, and repair if necessary. If the KOS-ECU connector is in good condition, replace the KOS-ECU.

STEP 25. M.U.T.-III CAN bus diagnostics (checking the radio and CD player for internal failure)

⚠ CAUTION

Strictly observe the specified wiring harness repair procedure. For details refer to .

Disconnect C-103 radio and CD player connector, and diagnose the CAN bus line.

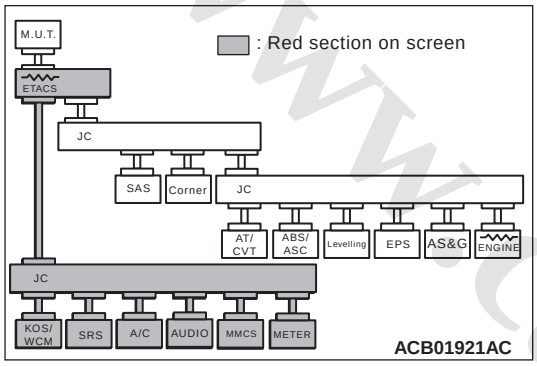

OK: The display of the M.U.T.-III is as shown in the figure.

Q: Does M.U.T.-III screen correspond to the illustration?

YES : Repair the wiring harness between C-103 radio and CD player connector and C-04 joint connector (CAN1).

NO : Check the radio and CD player connector, and repair if necessary. If the radio and CD player connector is in good condition, replace the radio and CD player.

STEP 26. M.U.T.-III CAN bus diagnostics (checking the CAN box unit for internal failure)

⚠ CAUTION

Strictly observe the specified wiring harness repair procedure. For details refer to .

Disconnect C-54 CAN box unit connector, and diagnose the CAN bus line.

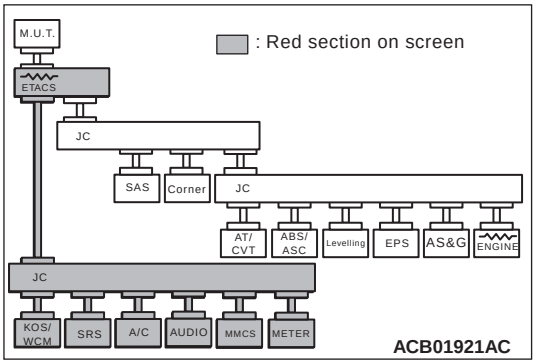

OK: The display of the M.U.T.-III is as shown in the figure.

Q: Does M.U.T.-III screen correspond to the illustration?

YES : Repair the wiring harness between C-54 CAN box unit connector and C-04 joint connector (CAN1).

NO : Check the CAN box unit connector, and repair if necessary. If the CAN box unit connector is in good condition, replace the CAN box unit.

STEP 27. Trouble symptom check

Diagnose the CAN bus line, and check that normal condition is displayed.

Q: Is the check result normal?

YES : The trouble can be an intermittent malfunction (Refer to GROUP 00 – How to use Troubleshooting/inspection Service Points – How to Cope with Intermittent Malfunction).

NO : Check the ETACS-ECU connector, and repair if necessary. If the ETACS-ECU connector is in good condition, replace the ETACS-ECU.

www.cargeek.ir

www.CarGeek.ir

Diagnosis Item 24: Diagnose the ETACS-ECU, joint connector (CAN1) or lines between ETACS-ECU and joint connector (CAN1)

⚠ CAUTION

When servicing a CAN bus line, earth yourself by touching a metal object such as an unpainted water pipe. If you fail to do, a component connected to the CAN bus line may be broken.

www.cargeek.ir

www.cargeek.ir

www.CarGeek.ir

CAN-B Communication Circuit

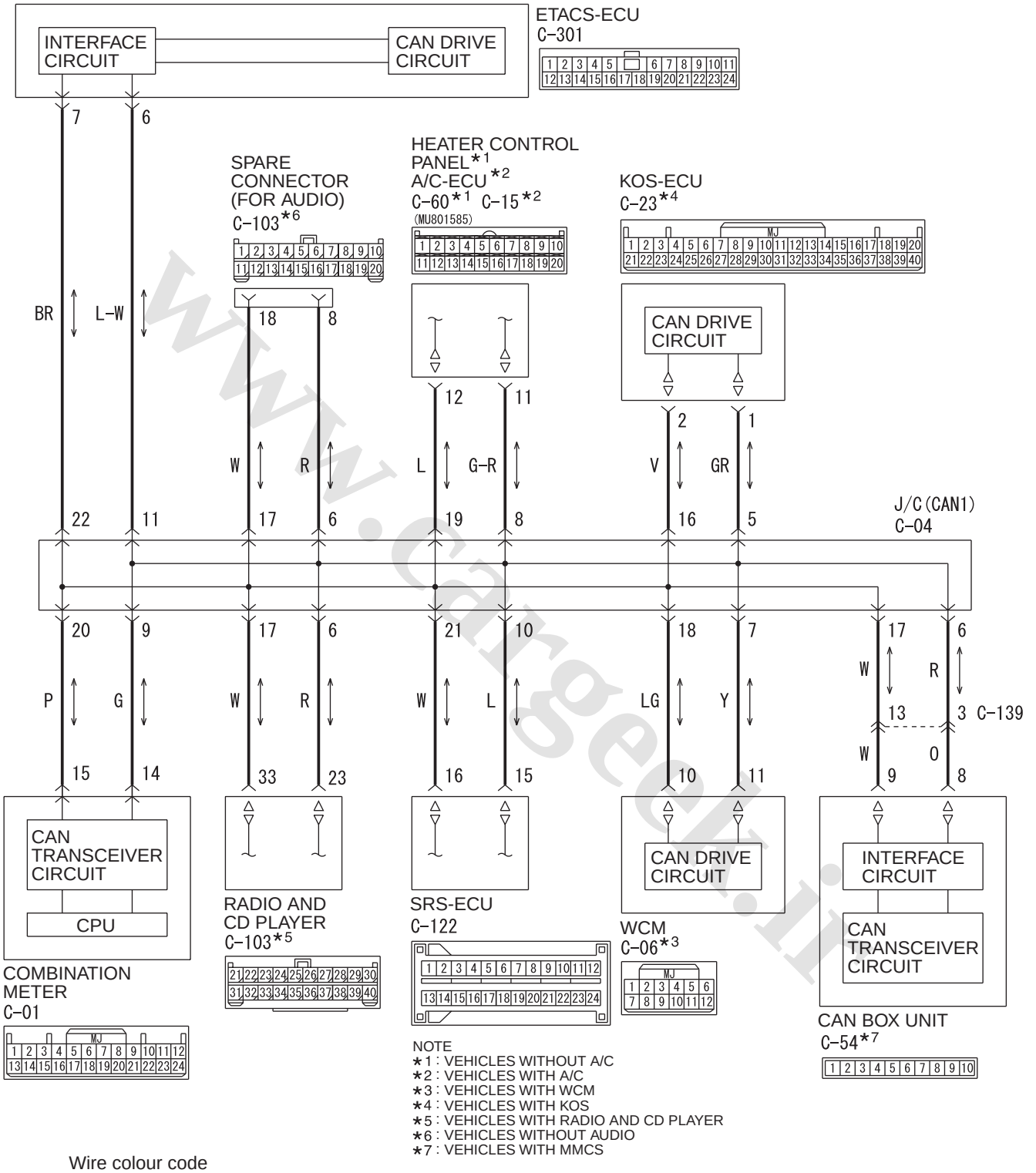

www.cargeek.ir

www.CarGeek.ir

Connector: C-04 <LHD>

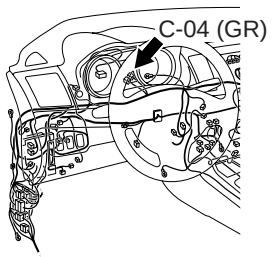

ACB02645AL

Connector: C-04 <RHD>

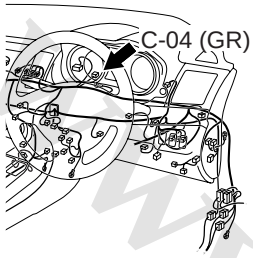

ACB02647AH

Connector: C-301 <LHD>
ETACS-ECU

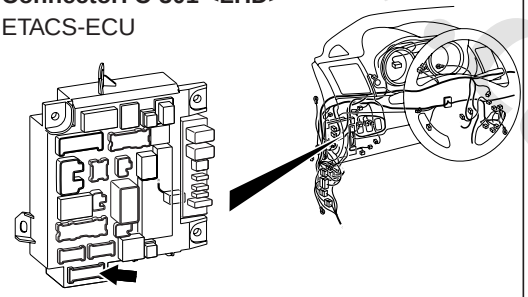

ACA00886BE

Connector: C-301 <RHD>
ETACS-ECU

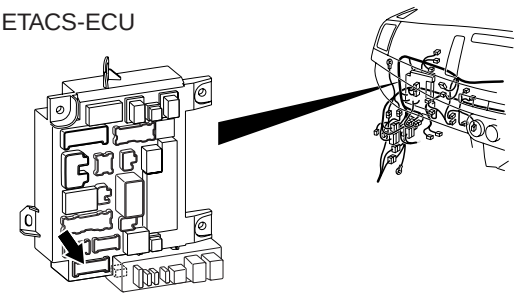

ACA00887BF

FUNCTION

If a failure is present in the wiring harness wires between the ETACS-ECU connector and the joint connector (CAN1), the ETACS-ECU connector and the joint connector (CAN1), this diagnosis result will be set.

TROUBLE JUDGEMENT CONDITIONS

If a communication flag is set for none of the ECUs on the CAN-B line, the ETACS-ECU determines that there is a failure.

TROUBLESHOOTING HINTS

- Malfunction of the connector [joint connector (CAN1) or ETACS-ECU connector improperly connected]
- Malfunction of the wiring harness [open circuit between the ETACS-ECU connector and the joint connector (CAN1)]
- Malfunction of the ETACS-ECU

DIAGNOSIS PROCEDURE

STEP 1. Connector check: C-04 joint connector (CAN1) and C-301 ETACS-ECU connector

⚠ CAUTION

The strand end of the twist wire should be within 10 cm from the connector. For details refer to .

Q: Is the check result normal?
YES : Go to Step 2.
NO : Repair the defective connector.

STEP 2. Check the wiring harness between C-301 ETACS-ECU connector and C-04 joint connector (CAN1)

⚠ CAUTION

Strictly observe the specified wiring harness repair procedure. For details refer to .

Disconnect ETACS-ECU connector and joint connector (CAN1), and check the following wiring harness for open circuit

(1) The wiring harness between C-301 ETACS-ECU connector terminal No.6 and C-04 joint connector (CAN1) terminal No.6 <CAN_H>

OK: Continuity exists (2 Ω or less)

(2) The wiring harness between C-301 ETACS-ECU connector terminal No.7 and C-04 joint connector (CAN1) terminal No.19 <CAN_L>

OK: Continuity exists (2 Ω or less)

Q: Is the check result normal?
YES : Go to Step 3.
NO : Repair the wiring harness.

STEP 3. Trouble symptom check

Diagnose the CAN bus line, and check that normal condition is displayed.

Q: Is the check result normal?
YES : The trouble can be an intermittent malfunction (Refer to GROUP 00 – How to use Troubleshooting/inspection Service Points – How to Cope with Intermittent Malfunction).
NO : Replace the ETACS-ECU.

www.cargeek.ir

www.CarGeek.ir

Diagnosis Item 25: Short to power supply or earth, open circuit or line-to-line short in the CAN-B bus lines

⚠ CAUTION

When servicing a CAN bus line, earth yourself by touching a metal object such as an unpainted water pipe. If you fail to do, a component connected to the CAN bus line may be broken.

www.cargeek.ir

www.cargeek.ir

www.CarGeek.ir

CAN-B Communication Circuit

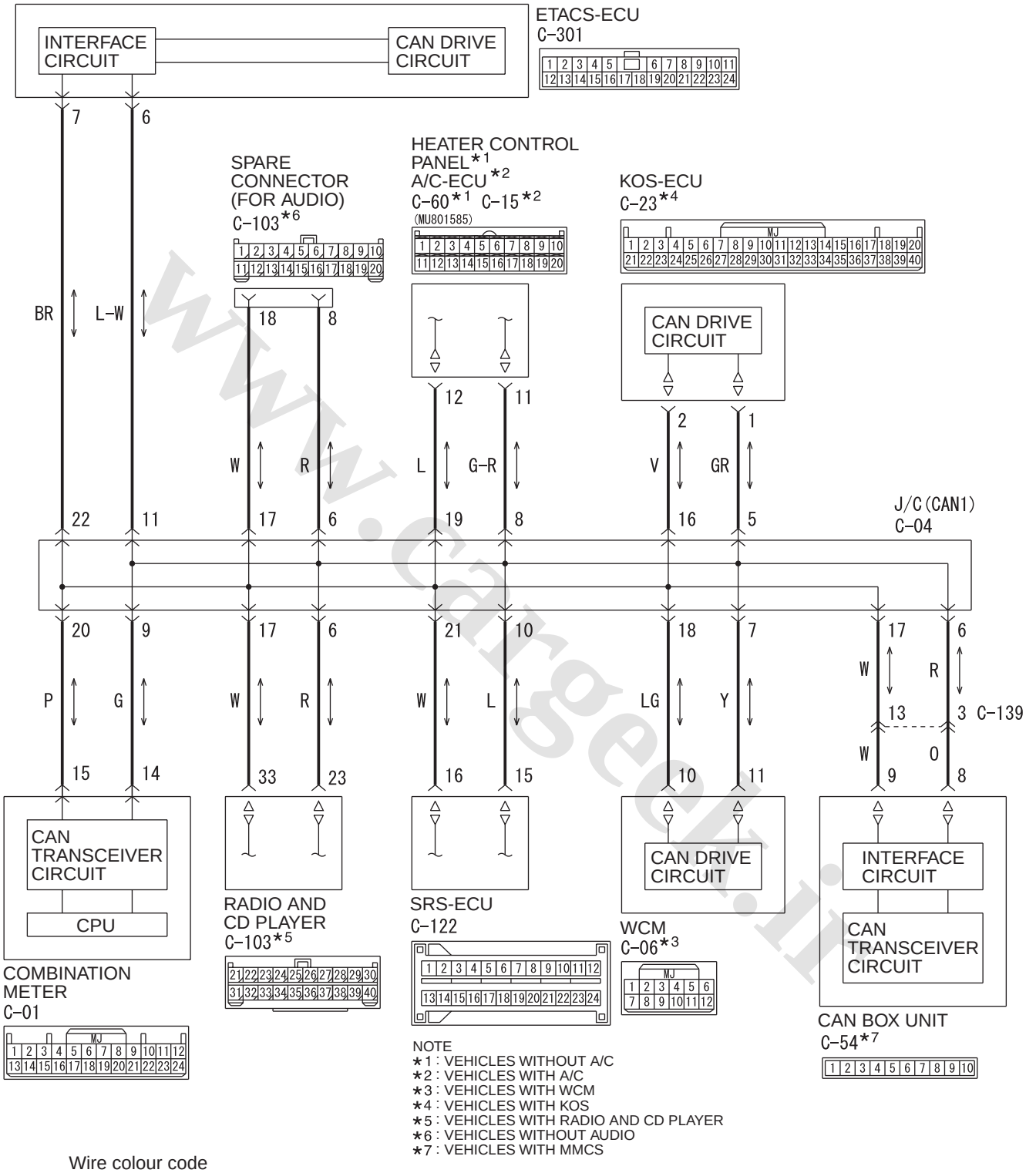

NOTE
*1 : VEHICLES WITHOUT A/C
*2 : VEHICLES WITH A/C
*3 : VEHICLES WITH WCM
*4 : VEHICLES WITH KOS
*5 : VEHICLES WITH RADIO AND CD PLAYER
*6 : VEHICLES WITHOUT AUDIO
*7 : VEHICLES WITH MMCS

Wire colour code
B : Black LG : Light green G : Green L : Blue W : White Y : Yellow SB : Sky blue
BR : Brown O : Orange GR : Grey R : Red P : Pink V : Violet PU : Purple SI : Silver

WDH54E016A

www.cargeek.ir

www.CarGeek.ir

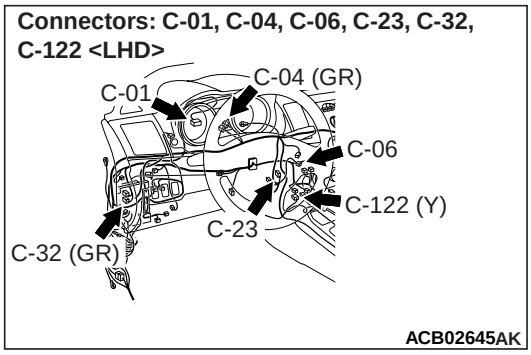

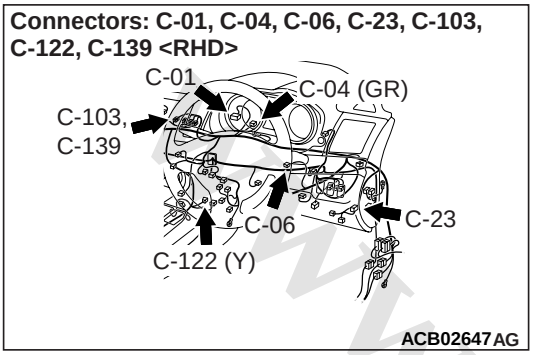

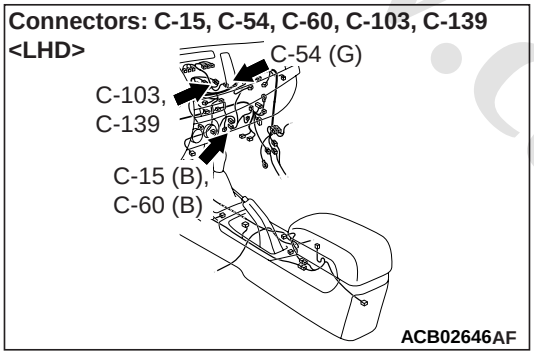

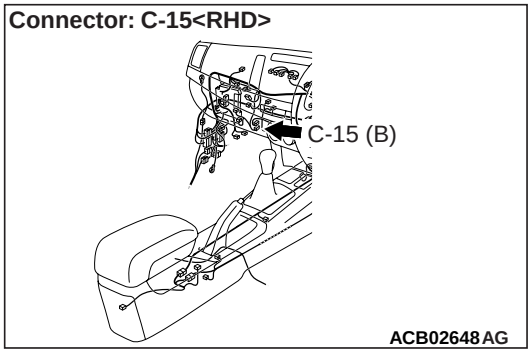

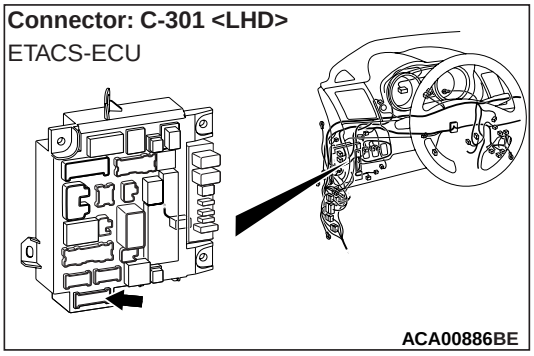

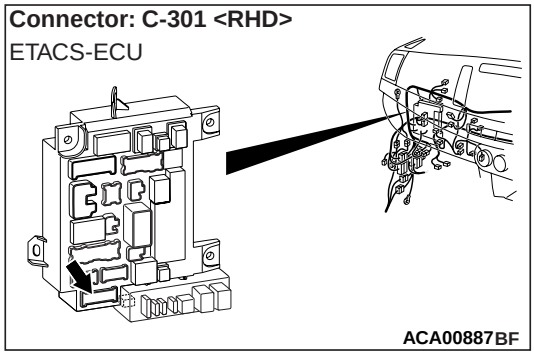

FUNCTION

If a short to power supply or earth, open circuit or line-to-line short is present at either CAN_H or CAN_L side on the CAN-B lines, this diagnosis result will be set.

TROUBLE JUDGEMENT CONDITIONS

When CAN-B lines communication is normal, and diagnosis code U0019 is set in one or more of the ECUs, the ETACS-ECU determines that there is a failure.

TROUBLESHOOTING HINTS

- Malfunction of the connector (short to power supply or earth in connector or improperly connected)
- Malfunction of the wiring harness (short to power supply or earth, open circuit or line-to-line short in CAN bus lines)
- Faulty ECU(s) (internal short to power supply or earth)

DIAGNOSIS PROCEDURE

STEP 1. Checking short to earth (resistance measurement)

NOTE: This check determines whether there is a short to earth in the CAN-B bus line. If a short to earth is present in either the CAN_H or CAN_L line, check the appropriate line only.

⚠ CAUTION

- **Disconnect the negative battery terminal. For details refer to .**
- **A digital multimeter should be used. For details refer to .**
- **The test wiring harness should be used. For details refer to .**

(1) Disconnect C-301 ETACS-ECU connector, and measure at the wiring harness side.
(2) Measure the resistance between C-301 ETACS-ECU connector terminal No.6 and body earth.

www.cargeek.ir

www.CarGeek.ir

<CAN_H>

OK: 1 kΩ or more

(3) Measure the resistance between C-301 ETACS-ECU connector terminal No.7 and body earth. <CAN_L>

OK: 1 kΩ or more

Q: Is the check result normal?
YES : Go to Step 11.
NO : Go to Step 2.

STEP 2. Check the wiring harness between C-122 SRS connector and C-04 joint connector (CAN1) for short to earth (resistance measurement).

⚠ CAUTION

- **Disconnect the negative battery terminal. For details refer to .**
- **A digital multimeter should be used. For details refer to .**
- **The test wiring harness should be used. For details refer to .**

(1) Disconnect joint connector (CAN1), and measure at the wiring harness side.
(2) Measure the resistance between C-04 joint connector (CAN1) terminal No.10 and body earth.

OK: 1 kΩ or more

(3) Measure the resistance between C-04 joint connector (CAN1) terminal No.21 and body earth.

OK: 1 kΩ or more

Q: Is the check result normal?
YES : Go to Step 3.
NO : Go to Step 40.

STEP 3. Check the wiring harness between C-60 heater control unit connector <vehicles without A/C> or C-15 A/C-ECU connector <vehicles with A/C> and C-04 joint connector (CAN1) for short to earth (resistance measurement).

⚠ CAUTION

- **Disconnect the negative battery terminal. For details refer to .**
- **A digital multimeter should be used. For details refer to .**
- **The test wiring harness should be used. For details refer to .**

(1) Disconnect joint connector (CAN1), and measure at the wiring harness side.
(2) Measure the resistance between C-04 joint connector (CAN1) terminal No.8 and body earth.

<CAN_H>

OK: 1 kΩ or more

(3) Measure the resistance between C-04 joint connector (CAN1) terminal No.19 and body earth. <CAN_L>

OK: 1 kΩ or more

Q: Is the check result normal?
YES : Go to Step 4.
NO : Go to Step 41.

STEP 4. Check the wiring harness between C-01 combination meter connector and C-04 joint connector (CAN1) for short to earth (resistance measurement).

⚠ CAUTION

- **Disconnect the negative battery terminal. For details refer to .**
- **A digital multimeter should be used. For details refer to .**
- **The test wiring harness should be used. For details refer to .**

(1) Disconnect joint connector (CAN1), and measure at the wiring harness side.
(2) Measure the resistance between C-04 joint connector (CAN1) terminal No.9 and body earth. <CAN_H>

OK: 1 kΩ or more

(3) Measure the resistance between C-04 joint connector (CAN1) terminal No.20 and body earth. <CAN_L>

OK: 1 kΩ or more

Q: Is the check result normal?
YES <vehicles without KOS> : Go to Step 5.
YES <vehicles with KOS> : Go to Step 6.
NO (the check result is not normal.) : Go to Step 42.

STEP 5. Check the wiring harness between C-06 WCM connector and C-04 joint connector (CAN1) for short to earth (resistance measurement).

⚠ CAUTION

- **Disconnect the negative battery terminal. For details refer to .**
- **A digital multimeter should be used. For details refer to .**
- **The test wiring harness should be used. For details refer to .**

(1) Disconnect joint connector (CAN1), and measure at the wiring harness side.
(2) Measure the resistance between C-04 joint

www.cargeek.ir

www.CarGeek.ir

connector (CAN1) terminal No.7 and body earth. <CAN_H>

OK: 1 kΩ or more

(3) Measure the resistance between C-04 joint connector (CAN1) terminal No.18 and body earth. <CAN_L>

OK: 1 kΩ or more

Q: Is the check result normal?

YES <vehicles with radio and CD player> : Go to Step 7.

YES <vehicles with MMCS (vehicles for Russia)> : Go to Step 8.

YES <vehicles without MMCS and without radio and CD player> : Go to Step 9.

NO (the check result is not normal.) : Go to Step 43.

STEP 6. Check the wiring harness between C-23 KOS-ECU connector and C-04 joint connector (CAN1) for short to earth (resistance measurement).

⚠ CAUTION

- **Disconnect the negative battery terminal. For details refer to .**
- **A digital multimeter should be used. For details refer to .**
- **The test wiring harness should be used. For details refer to .**

(1) Disconnect joint connector (CAN1), and measure at the wiring harness side.

(2) Measure the resistance between C-04 joint connector (CAN1) terminal No.5 and body earth. <CAN_H>

OK: 1 kΩ or more

(3) Measure the resistance between C-04 joint connector (CAN1) terminal No.16 and body earth. <CAN_L>

OK: 1 kΩ or more

Q: Is the check result normal?

YES <vehicles with radio and CD player> : Go to Step 7.

YES <vehicles with MMCS (vehicles for Russia)> : Go to Step 8.

YES <vehicles without MMCS and without radio and CD player> : Go to Step 9.

NO (the check result is not normal.) : Go to Step 44.

STEP 7. Check the wiring harness between C-103 radio and CD player connector and C-04 joint connector (CAN1) for short to earth (resistance measurement).

⚠ CAUTION

- **Disconnect the negative battery terminal. For details refer to .**
- **A digital multimeter should be used. For details refer to .**
- **The test wiring harness should be used. For details refer to .**

(1) Disconnect joint connector (CAN1), and measure at the wiring harness side.

(2) Measure the resistance between C-04 joint connector (CAN1) terminal No.6 and body earth. <CAN_H>

OK: 1 kΩ or more

(3) Measure the resistance between C-04 joint connector (CAN1) terminal No.17 and body earth. <CAN_L>

OK: 1 kΩ or more

Q: Is the check result normal?

YES : Go to Step 10.

NO : Go to Step 45.

STEP 8. Check the wiring harness between C-54 CAN box unit connector and C-04 joint connector (CAN1) for short to earth (resistance measurement).

⚠ CAUTION

- **Disconnect the negative battery terminal. For details refer to .**
- **A digital multimeter should be used. For details refer to .**
- **The test wiring harness should be used. For details refer to .**

(1) Disconnect joint connector (CAN1), and measure at the wiring harness side.

(2) Measure the resistance between C-04 joint connector (CAN1) terminal No.6 and body earth. <CAN_H>

OK: 1 kΩ or more

(3) Measure the resistance between C-04 joint connector (CAN1) terminal No.17 and body earth. <CAN_L>

OK: 1 kΩ or more

Q: Is the check result normal?

YES : Go to Step 10.

NO : Go to Step 46.

www.cargeek.ir

www.CarGeek.ir

STEP 9. Check the wiring harness between C-103 spare connector (for audio) and C-04 joint connector (CAN1) for short to earth (resistance measurement).

⚠ CAUTION

- **Disconnect the negative battery terminal. For details refer to .**
- **A digital multimeter should be used. For details refer to .**
- **The test wiring harness should be used. For details refer to .**

(1) Disconnect joint connector (CAN1), and measure at the wiring harness side.
(2) Measure the resistance between C-04 joint connector (CAN1) terminal No.6 and body earth.

OK: 1 kΩ or more

(3) Measure the resistance between C-04 joint connector (CAN1) terminal No.17 and body earth.

OK: 1 kΩ or more

Q: Is the check result normal?
YES : Go to Step 10.
NO : Repair the wiring harness between C-103 spare connector (for audio) and C-04 joint connector (CAN1).

STEP 10. Check the wiring harness between C-301 ETACS-ECU connector and C-04 joint connector (CAN1) for short to earth (resistance measurement).

⚠ CAUTION

- **Disconnect the negative battery terminal. For details refer to .**
- **A digital multimeter should be used. For details refer to .**
- **The test wiring harness should be used. For details refer to .**
- **Strictly observe the specified wiring harness repair procedure. For details refer to .**

(1) Disconnect ETACS-ECU connector and joint connector (CAN1), and measure at the wiring harness side.
(2) Measure the resistance between C-04 joint connector (CAN1) terminal No.11 and body earth. <CAN_H>

OK: 1 kΩ or more

(3) Measure the resistance between C-04 joint connector (CAN1) terminal No.22 and body earth. <CAN_L>

OK: 1 kΩ or more

Q: Is the check result normal?
YES : Go to Step 47.
NO : Repair the wiring harness between C-301 ETACS-ECU connector and C-04 joint connector (CAN1).

STEP 11. Checking short to power supply (voltage measurement)

NOTE: This check determines whether there is a short to power supply in the CAN-B bus line. If a failure is present in either the CAN_H or CAN_L line, check the appropriate line only.

⚠ CAUTION

- **A digital multimeter should be used. For details refer to .**
- **The test wiring harness should be used. For details refer to .**

(1) Disconnect C-301 ETACS-ECU connector, and measure at the wiring harness side.
(2) Turn the ignition switch to the ON position.
(3) Measure the voltage between C-301 ETACS-ECU connector terminal No.6 and body earth. <CAN_H>

OK: 5 V or less

(4) Measure the voltage between C-301 ETACS-ECU connector terminal No.7 and body earth. <CAN_L>

OK: 5 V or less

Q: Is the check result normal?
YES : Go to Step 21.
NO : Go to Step 12.

STEP 12. Check the wiring harness between C-122 SRS connector and C-04 joint connector (CAN1) for short to power supply (voltage measurement).

⚠ CAUTION

- **A digital multimeter should be used. For details refer to .**
- **The test wiring harness should be used. For details refer to .**

(1) Disconnect joint connector (CAN1), and measure at the wiring harness side.
(2) Turn the ignition switch to the ON position.
(3) Measure the voltage between C-04 joint connector (CAN1) terminal No.10 and body

www.cargeek.ir

www.CarGeek.ir

earth. <CAN_H>

OK: 5 V or less

(4) Measure the voltage between C-04 joint connector (CAN1) terminal No.21 and body earth. <CAN_L>

OK: 5 V or less

Q: Is the check result normal?
YES : Go to Step 13.
NO : Go to Step 40.

STEP 13. Check the wiring harness between C-60 heater control unit connector <vehicles without A/C> or C-15 A/C-ECU connector <vehicles with A/C> and C-04 joint connector (CAN1) for short to power supply (voltage measurement).

⚠ CAUTION
- **A digital multimeter should be used. For details refer to .**
- **The test wiring harness should be used. For details refer to .**

(1) Disconnect joint connector (CAN1), and measure at the wiring harness side.
(2) Turn the ignition switch to the ON position.
(3) Measure the voltage between C-04 joint connector (CAN1) terminal No.8 and body earth. <CAN_H>

OK: 5 V or less

(4) Measure the voltage between C-04 joint connector (CAN1) terminal No.19 and body earth. <CAN_H>

OK: 5 V or less

Q: Is the check result normal?
YES : Go to Step 14.
NO : Go to Step 41.

STEP 14. Check the wiring harness between C-01 combination meter connector and C-04 joint connector (CAN1) for short to power supply (voltage measurement).

⚠ CAUTION
- **A digital multimeter should be used. For details refer to .**
- **The test wiring harness should be used. For details refer to .**

(1) Disconnect joint connector (CAN1), and measure at the wiring harness side.
(2) Turn the ignition switch to the ON position.
(3) Measure the voltage between C-04 joint connector (CAN1) terminal No.9 and body earth. <CAN_H>

OK: 5 V or less

(4) Measure the voltage between C-04 joint connector (CAN1) terminal No.20 and body earth. <CAN_L>

OK: 5 V or less

Q: Is the check result normal?
YES <vehicles without KOS> : Go to Step 15.
YES <vehicles with KOS> : Go to Step 16.
NO (the check result is not normal.) : Go to Step 42.

STEP 15. Check the wiring harness between C-06 WCM connector and C-04 joint connector (CAN1) for short to power supply (voltage measurement).

⚠ CAUTION
- **A digital multimeter should be used. For details refer to .**
- **The test wiring harness should be used. For details refer to .**

(1) Disconnect joint connector (CAN1), and measure at the wiring harness side.
(2) Turn the ignition switch to the ON position.
(3) Measure the voltage between C-04 joint connector (CAN1) terminal No.7 and body earth. <CAN_H>

OK: 5 V or less

(4) Measure the voltage between C-04 joint connector (CAN1) terminal No.18 and body earth. <CAN_L>

OK: 5 V or less

Q: Is the check result normal?
YES <vehicles with radio and CD player> : Go to Step 17.
YES <vehicles with MMCS (vehicles for Russia)> : Go to Step 18.
YES <vehicles without MMCS and without radio and CD player> : Go to Step 19.
NO (the check result is not normal.) : Go to Step 43.

www.cargeek.ir

www.CarGeek.ir

STEP 16. Check the wiring harness between C-23 KOS-ECU connector and C-04 joint connector (CAN1) for short to power supply (voltage measurement).

⚠ CAUTION

- **A digital multimeter should be used. For details refer to .**
- **The test wiring harness should be used. For details refer to .**

(1) Disconnect joint connector (CAN1), and measure at the wiring harness side.
(2) Turn the ignition switch to the ON position.
(3) Measure the voltage between C-04 joint connector (CAN1) terminal No.5 and body earth. <CAN_H>

OK: 5 V or less

(4) Measure the voltage between C-04 joint connector (CAN1) terminal No.16 and body earth. <CAN_L>

OK: 5 V or less

Q: Is the check result normal?
YES <vehicles with radio and CD player> : Go to Step 17.
YES <vehicles with MMCS (vehicles for Russia)> : Go to Step 18.
YES <vehicles without MMCS and without radio and CD player> : Go to Step 19.
NO (the check result is not normal.) : Go to Step 44.

STEP 17. Check the wiring harness between C-103 radio and CD player connector and C-04 joint connector (CAN1) for short to power supply (voltage measurement).

⚠ CAUTION

- **A digital multimeter should be used. For details refer to .**
- **The test wiring harness should be used. For details refer to .**

(1) Disconnect joint connector (CAN1), and measure at the wiring harness side.
(2) Turn the ignition switch to the ON position.
(3) Measure the voltage between C-04 joint connector (CAN1) terminal No.6 and body earth. <CAN_H>

OK: 5 V or less

(4) Measure the voltage between C-04 joint connector (CAN1) terminal No.17 and body earth. <CAN_L>

OK: 5 V or less

Q: Is the check result normal?
YES : Go to Step 20.
NO : Go to Step 45.

STEP 18. Check the wiring harness between C-54 CAN box unit connector and C-04 joint connector (CAN1) for short to power supply (voltage measurement).

⚠ CAUTION

- **A digital multimeter should be used. For details refer to .**
- **The test wiring harness should be used. For details refer to .**

(1) Disconnect joint connector (CAN1), and measure at the wiring harness side.
(2) Turn the ignition switch to the ON position.
(3) Measure the voltage between C-04 joint connector (CAN1) terminal No.6 and body earth. <CAN_H>

OK: 5 V or less

(4) Measure the voltage between C-04 joint connector (CAN1) terminal No.17 and body earth. <CAN_L>

OK: 5 V or less

Q: Is the check result normal?
YES : Go to Step 20.
NO : Go to Step 46.

STEP 19. Check the wiring harness between C-103 spare connector (for audio) and C-04 joint connector (CAN1) for short to power supply (voltage measurement).

⚠ CAUTION

- **A digital multimeter should be used. For details refer to .**
- **The test wiring harness should be used. For details refer to .**

(1) Disconnect joint connector (CAN1), and measure at the wiring harness side.
(2) Turn the ignition switch to the ON position.
(3) Measure the voltage between C-04 joint connector (CAN1) terminal No.6 and body earth.

OK: 5 V or less

(4) Measure the voltage between C-04 joint connector (CAN1) terminal No.17 and body earth.

OK: 5 V or less

Q: Is the check result normal?
YES : Go to Step 20.
NO : Repair the wiring harness between C-103 spare connector (for audio) and C-04 joint connector (CAN1).

www.cargeek.ir

www.CarGeek.ir

STEP 20. Check the wiring harness between C-301 ETACS-ECU connector and C-04 joint connector (CAN1) for short to power supply (voltage measurement).

⚠ CAUTION

- **A digital multimeter should be used. For details refer to .**
- **The test wiring harness should be used. For details refer to .**
- **Strictly observe the specified wiring harness repair procedure. For details refer to .**

(1) Disconnect the ETACS-ECU connector and joint connector (CAN1), and measure at the wiring harness side.
(2) Turn the ignition switch to the ON position.
(3) Measure the voltage between C-04 joint connector (CAN1) terminal No.11 and body earth. <CAN_H>

OK: 1 V or less

(4) Measure the voltage between C-04 joint connector (CAN1) terminal No.22 and body earth. <CAN_L>

OK: 1 V or less

Q: Is the check result normal?
YES : Go to Step 47.
NO : Repair the wiring harness between C-301 ETACS-ECU connector and C-04 joint connector (CAN1).

STEP 21. Checking line-to-line short

⚠ CAUTION

- **Disconnect the negative battery terminal. For details refer to .**
- **A digital multimeter should be used. For details refer to .**
- **The test wiring harness should be used. For details refer to .**

(1) Disconnect C-301 ETACS-ECU connector, and check that there is continuity at the harness side.
(2) Check that there is continuity between C-301 ETACS-ECU connector terminal Nos.6 and 7.

OK: No continuity

Q: Is the check result normal?
YES : Go to Step 31.
NO : Go to Step 22.

STEP 22. Check the wiring harness between C-122 SRS connector and C-04 joint connector (CAN1) for line-to-line short.

⚠ CAUTION

- **Disconnect the negative battery terminal. For details refer to .**
- **A digital multimeter should be used. For details refer to .**
- **The test wiring harness should be used. For details refer to .**

(1) Disconnect joint connector (CAN1), and check that there is continuity at the harness side.
(2) Check that there is continuity between C-04 joint connector terminal No.10 and 21.

OK: No continuity

Q: Is the check result normal?
YES : Go to Step 23.
NO : Go to Step 40.

STEP 23. Check the wiring harness between C-60 heater control unit connector <vehicles without A/C> or C-15 A/C-ECU connector <vehicles with A/C> and C-04 joint connector (CAN1) for line-to-line short.

⚠ CAUTION

- **Disconnect the negative battery terminal. For details refer to .**
- **A digital multimeter should be used. For details refer to .**
- **The test wiring harness should be used. For details refer to .**

(1) Disconnect joint connector (CAN1), and check that there is continuity at the harness side.
(2) Check that there is continuity between C-04 joint connector terminal No.8 and 19.

OK: No continuity

Q: Is the check result normal?
YES : Go to Step 24.
NO : Go to Step 41.

www.cargeek.ir

www.CarGeek.ir

STEP 24. Check the wiring harness between C-01 combination meter connector and C-04 joint connector (CAN1) for line-to-line short.

⚠ CAUTION

- **Disconnect the negative battery terminal. For details refer to .**
- **A digital multimeter should be used. For details refer to .**
- **The test wiring harness should be used. For details refer to .**

(1) Disconnect joint connector (CAN1), and check that there is continuity at the harness side.
(2) Check that there is continuity between C-04 joint connector terminal No.9 and 20.

OK: No continuity

Q: Is the check result normal?
YES <vehicles without KOS> : Go to Step 25.
YES <vehicles with KOS> : Go to Step 26.
NO (the check result is not normal.) : Go to Step 42.

STEP 25. Check the wiring harness between C-06 WCM connector and C-04 joint connector (CAN1) for line-to-line short.

⚠ CAUTION

- **Disconnect the negative battery terminal. For details refer to .**
- **A digital multimeter should be used. For details refer to .**
- **The test wiring harness should be used. For details refer to .**

(1) Disconnect joint connector (CAN1), and check that there is continuity at the harness side.
(2) Check that there is continuity between C-04 joint connector terminal No.7 and 18.

OK: No continuity

Q: Is the check result normal?
YES <vehicles with radio and CD player> : Go to Step 27.
YES <vehicles with MMCS (vehicles for Russia)> : Go to Step 28.
YES <vehicles without MMCS and without radio and CD player> : Go to Step 29.
NO (the check result is not normal.) : Go to Step 43.

STEP 26. Check the wiring harness between C-23 KOS-ECU connector and C-04 joint connector (CAN1) for line-to-line short.

⚠ CAUTION

- **Disconnect the negative battery terminal. For details refer to .**
- **A digital multimeter should be used. For details refer to .**
- **The test wiring harness should be used. For details refer to .**

(1) Disconnect joint connector (CAN1), and check that there is continuity at the harness side.
(2) Check that there is continuity between C-04 joint connector terminal No. 5 and 16.

OK: No continuity

Q: Is the check result normal?
YES <vehicles with radio and CD player> : Go to Step 27.
YES <vehicles with MMCS (vehicles for Russia)> : Go to Step 28.
YES <vehicles without MMCS and without radio and CD player> : Go to Step 29.
NO (the check result is not normal.) : Go to Step 44.

STEP 27. Check the wiring harness between C-103 radio and CD player connector and C-04 joint connector (CAN1) for line-to-line short.

⚠ CAUTION

- **Disconnect the negative battery terminal. For details refer to .**
- **A digital multimeter should be used. For details refer to .**
- **The test wiring harness should be used. For details refer to .**

(1) Disconnect joint connector (CAN1), and check that there is continuity at the harness side.
(2) Check that there is continuity between C-04 joint connector terminal No. 6 and 17.

OK: No continuity

Q: Is the check result normal?
YES : Go to Step 30.
NO : Go to Step 45.

www.cargeek.ir

www.CarGeek.ir

STEP 28. Check the wiring harness between C-54 CAN box unit connector and C-04 joint connector (CAN1) for line-to-line short.

⚠ CAUTION

- **Disconnect the negative battery terminal. For details refer to .**
- **A digital multimeter should be used. For details refer to .**
- **The test wiring harness should be used. For details refer to .**

(1) Disconnect joint connector (CAN1), and check that there is continuity at the harness side.
(2) Check that there is continuity between C-04 joint connector terminal No. 6 and 17.

OK: No continuity

Q: Is the check result normal?
YES : Go to Step 30.
NO : Go to Step 46.

STEP 29. Check the wiring harness between C-103 spare connector (for audio) and C-04 joint connector (CAN1) for line-to-line short.

⚠ CAUTION

- **Disconnect the negative battery terminal. For details refer to .**
- **A digital multimeter should be used. For details refer to .**
- **The test wiring harness should be used. For details refer to .**

(1) Disconnect joint connector (CAN1), and check that there is continuity at the harness side.
(2) Check that there is continuity between C-04 joint connector terminal No. 6 and 17.

OK: No continuity

Q: Is the check result normal?
YES : Go to Step 30.
NO : Repair the wiring harness between C-103 spare connector (for audio) and C-04 joint connector (CAN1).

STEP 30. Check the wiring harness between C-301 ETACS-ECU connector and C-04 joint connector (CAN1) for line-to-line short.

⚠ CAUTION

- **Disconnect the negative battery terminal. For details refer to .**
- **A digital multimeter should be used. For details refer to .**
- **The test wiring harness should be used. For details refer to .**
- **Strictly observe the specified wiring harness repair procedure. For details refer to .**

(1) Disconnect joint connector (CAN1), and check that there is continuity at the harness side.
(2) Check that there is continuity between C-04 joint connector terminal Nos. 11 and 22.

OK: No continuity

Q: Is the check result normal?
YES : Go to Step 47.
NO : Repair the wiring harness between C-301 ETACS-ECU connector and C-04 joint connector (CAN1).

STEP 31. Check the wiring harness between C-122 SRS-ECU connector and C-04 joint connector (CAN1) for open circuit.

Disconnect SRS-ECU connector and joint connector (CAN1), and check the following wiring harness.
(1) The wiring harness between C-122 SRS-ECU connector terminal No.15 and C-04 joint connector (CAN1) terminal No.10.

OK: Continuity exists (2 Ω or less)

(2) The wiring harness between C-122 SRS-ECU connector terminal No.16 and C-04 joint connector (CAN1) terminal No.21.

OK: Continuity exists (2 Ω or less)

Q: Is the check result normal?
YES : Go to Step 32.
NO : Repair the wiring harness between C-122 SRS-ECU connector and C-04 joint connector (CAN1).

www.cargeek.ir

www.CarGeek.ir

STEP 32. Check the wiring harness between C-60 heater control unit connector <vehicles without A/C> or C-15 A/C-ECU connector <vehicles with A/C> and C-04 joint connector (CAN1) for open circuit.

Disconnect heater control unit connector <vehicles without A/C> or A/C-ECU connector <vehicles with A/C> connector and joint connector (CAN1), and check the following wiring harness for open circuit.

(1) The wiring harness between C-60 heater control unit connector <vehicles without A/C> or C-15 A/C-ECU connector <vehicles with A/C> terminal No.11 and C-04 joint connector (CAN1) terminal No.8.

OK: Continuity exists (2 Ω or less)

(2) The wiring harness between C-60 heater control unit connector <vehicles without A/C> or C-15 A/C-ECU connector <vehicles with A/C> terminal No.12 and C-04 joint connector (CAN1) terminal No.19.

OK: Continuity exists (2 Ω or less)

Q: Is the check result normal?

YES : Go to Step 33.

NO : Repair the wiring harness between C-60 heater control unit connector <vehicles without A/C> or C-15 A/C-ECU connector <vehicles with A/C> and C-04 joint connector (CAN1).

STEP 33. Check the wiring harness between C-01 combination meter connector and C-04 joint connector (CAN1) for open circuit.

Disconnect combination meter connector and joint connector (CAN1), and check the wiring harness for open circuit.

(1) The wiring harness between C-01 combination meter connector terminal No.14 and C-04 joint connector (CAN1) terminal No.9.

OK: Continuity exists (2 Ω or less)

(2) The wiring harness between C-01 combination meter connector terminal No.15 and C-04 joint connector (CAN1) terminal No.20.

OK: Continuity exists (2 Ω or less)

Q: Is the check result normal?

YES <vehicles without KOS> : Go to Step 34.

YES <vehicles with KOS> : Go to Step 35.

NO (the check result is not normal.) : Repair the wiring harness between C-01 combination meter connector and C-04 joint connector (CAN1).

STEP 34. Check the wiring harness between C-06 WCM connector and C-04 joint connector (CAN1) for open circuit.

Disconnect WCM connector and joint connector (CAN1), and check the following wiring harness for open circuit.

(1) The wiring harness between C-06 WCM connector terminal No.11 and C-04 joint connector (CAN1) terminal No.7.

OK: Continuity exists (2 Ω or less)

(2) The wiring harness between C-06 WCM connector terminal No.10 and C-04 joint connector (CAN1) terminal No.18.

OK: Continuity exists (2 Ω or less)

Q: Is the check result normal?

YES <vehicles with radio and CD player> : Go to Step 36.

YES <vehicles with MMCS (vehicles for Russia)> : Go to Step 37.

YES <vehicles without MMCS and without radio and CD player> : Go to Step 38.

NO (the check result is not normal.) : Repair the wiring harness between C-06 WCM connector and C-04 joint connector (CAN1).

STEP 35. Check the wiring harness between C-23 KOS-ECU connector and C-04 joint connector (CAN1) for open circuit.

Disconnect KOS-ECU connector and joint connector (CAN1), and check the following wiring harness for open circuit.

(1) The wiring harness between C-23 KOS-ECU connector terminal No.1 and C-04 joint connector (CAN1) terminal No.5.

OK: Continuity exists (2 Ω or less)

(2) The wiring harness between C-23 KOS-ECU connector terminal No.2 and C-04 joint connector (CAN1) terminal No.16.

OK: Continuity exists (2 Ω or less)

Q: Is the check result normal?

YES <vehicles with radio and CD player> : Go to Step 36.

YES <vehicles with MMCS (vehicles for Russia)> : Go to Step 37.

YES <vehicles without MMCS and without radio and CD player> : Go to Step 38.

NO (the check result is not normal.) : Repair the wiring harness between C-23 KOS-ECU connector and C-04 joint connector (CAN1).

www.cargeek.ir

www.CarGeek.ir

STEP 36. Check the wiring harness between C-103 radio and CD player connector and C-04 joint connector (CAN1) for open circuit.

Disconnect radio and CD player connector and joint connector (CAN1), and check the following wiring harness for open circuit.

(1) The wiring harness between C-103 radio and CD player connector terminal No.23 and C-04 joint connector (CAN1) terminal No.6.

OK: Continuity exists (2 Ω or less)

(2) The wiring harness between C-103 radio and CD player connector terminal No.33 and C-04 joint connector (CAN1) terminal No.17.

OK: Continuity exists (2 Ω or less)

Q: Is the check result normal?

YES : Go to Step 39.

NO : Repair the wiring harness between C-103 radio and CD player connector and C-04 joint connector (CAN1)

STEP 37. Check the wiring harness between C-54 CAN box unit connector and C-04 joint connector (CAN1) for open circuit.

Disconnect CAN box unit connector and joint connector (CAN1), and check the following wiring harness for open circuit.

(1) The wiring harness between C-54 CAN box unit connector terminal No.8 and C-04 joint connector (CAN1) terminal No.6.

OK: Continuity exists (2 Ω or less)

(2) The wiring harness between C-54 CAN box unit connector terminal No.9 and C-04 joint connector (CAN1) terminal No.17.

OK: Continuity exists (2 Ω or less)

Q: Is the check result normal?

YES : Go to Step 39.

NO : Repair the wiring harness between C-54 CAN box unit connector and C-04 joint connector (CAN1).

STEP 38. Check the wiring harness between C-103 spare connector (for audio) and C-04 joint connector (CAN1) for open circuit.

Disconnect joint connector (CAN1), and check the following wiring harness for open circuit.

(1) The wiring harness between C-103 spare connector (for audio) terminal No.8 and C-04 joint connector (CAN1) terminal No.1.

OK: Continuity exists (2 Ω or less)

(2) The wiring harness between C-103 spare connector (for audio) terminal No.18 and C-04 joint connector (CAN1) terminal No.17.

OK: Continuity exists (2 Ω or less)

Q: Is the check result normal?

YES : Go to Step 39.

NO : Repair the wiring harness between C-103 spare connector (for audio) and C-04 joint connector (CAN1).

STEP 39. Check the wiring harness between C-301 ETACS-ECU connector and C-04 joint connector (CAN1) for open circuit.

⚠ CAUTION

Strictly observe the specified wiring harness repair procedure. For details refer to .

Disconnect ETACS-ECU connector and joint connector (CAN1), and check the following wiring harness for open circuit.

(1) The wiring harness between C-301 ETACS-ECU connector terminal No.6 and C-04 joint connector (CAN1) terminal No.11

OK: Continuity exists (2 Ω or less)

(2) The wiring harness between C-301 ETACS-ECU connector terminal No.7 and C-04 joint connector (CAN1) terminal No.22

OK: Continuity exists (2 Ω or less)

Q: Is the check result normal?

YES : Go to Step 47.

NO : Repair the wiring harness between C-301 ETACS-ECU connector and C-04 joint connector (CAN1).

www.cargeek.ir

www.CarGeek.ir

STEP 40. M.U.T.-III CAN bus diagnostics (checking the SRS-ECU for internal short)

⚠ CAUTION

Strictly observe the specified wiring harness repair procedure. For details refer to .

Disconnect C-122 SRS-ECU connector, and diagnose the CAN bus line.

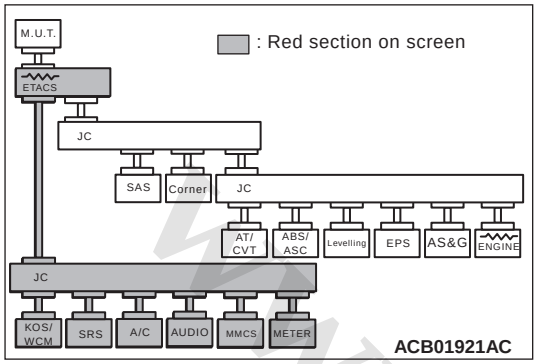

OK: The display of the M.U.T.-III is as shown in the figure.

Q: Does M.U.T.-III screen correspond to the illustration?

YES : Repair the wiring harness between C-122 SRS-ECU connector and C-04 joint connector (CAN1).

NO : Check the SRS-ECU connector, and repair if necessary. If the SRS-ECU connector is in good condition, replace the SRS-ECU.

STEP 41. M.U.T.-III CAN bus diagnostics (checking the heater control unit <vehicles without A/C> or A/C-ECU <vehicles with A/C> for internal short)

⚠ CAUTION

Strictly observe the specified wiring harness repair procedure. For details refer to .

Disconnect C-60 heater control unit connector <vehicles without A/C> or C-15 A/C-ECU connector <vehicles with A/C>, and diagnose the CAN bus line.

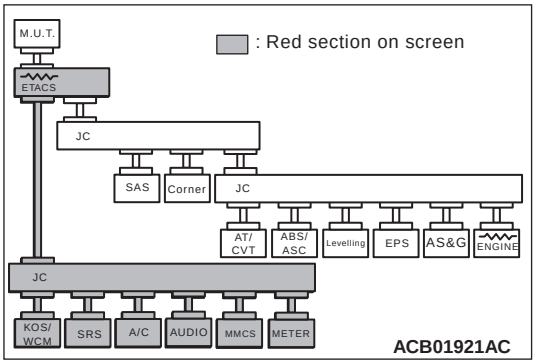

OK: The display of the M.U.T.-III is as shown in the figure.

Q: Does M.U.T.-III screen correspond to the illustration?

YES : Repair the wiring harness between C-60 heater control unit connector <vehicles without A/C> or C-15 A/C-ECU connector <vehicles with A/C> and C-04 joint connector (CAN1).

NO : Check the heater control unit connector <vehicles without A/C> or A/C-ECU connector <vehicles with A/C>, and repair if necessary. If the heater control unit connector <vehicles without A/C> or A/C-ECU connector <vehicles with A/C> is in good condition, replace the heater control unit <vehicles without A/C> or A/C-ECU <vehicles with A/C>.

www.cargeek.ir

www.CarGeek.ir

STEP 42. M.U.T.-III CAN bus diagnostics (checking the combination meter for internal short)

⚠ CAUTION

Strictly observe the specified wiring harness repair procedure. For details refer to .

Disconnect C-01 combination meter connector, and diagnose the CAN bus line.

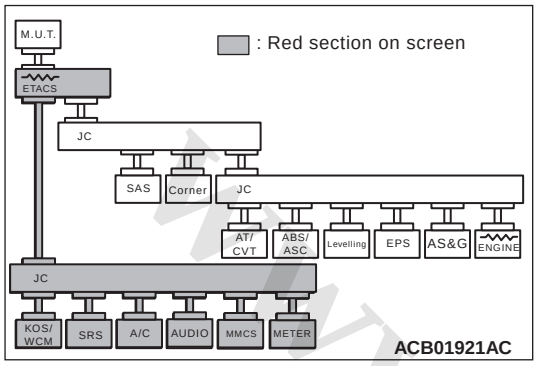

OK: The display of the M.U.T.-III is as shown in the figure.

Q: Does M.U.T.-III screen correspond to the illustration?

YES : Repair the wiring harness between C-01 combination meter connector and C-04 joint connector (CAN1).

NO : Check the combination meter connector, and repair if necessary. If the combination meter connector is in good condition, replace the combination meter.

STEP 43 M.U.T.-III CAN bus diagnostics (checking the WCM for internal short)

⚠ CAUTION

Strictly observe the specified wiring harness repair procedure. For details refer to .

Disconnect C-06 WCM connector, and diagnose the CAN bus line.

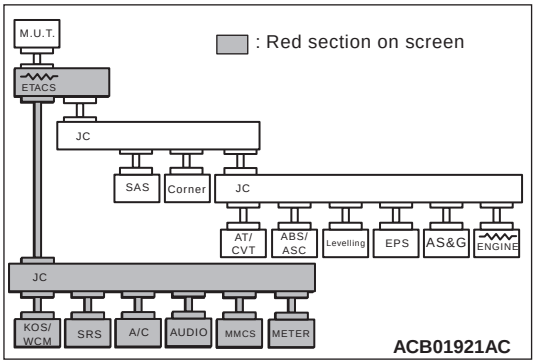

OK: The display of the M.U.T.-III is as shown in the figure.

Q: Does M.U.T.-III screen correspond to the illustration?

YES : Repair the wiring harness between C-06 WCM connector and C-04 joint connector (CAN1).

NO : Check the WCM connector, and repair if necessary. If the WCM connector is in good condition, replace the WCM.

STEP 44. M.U.T.-III CAN bus diagnostics (checking the KOS-ECU for internal short)

⚠ CAUTION

Strictly observe the specified wiring harness repair procedure. For details refer to .

Disconnect C-23 KOS-ECU connector, and diagnose the CAN bus line.

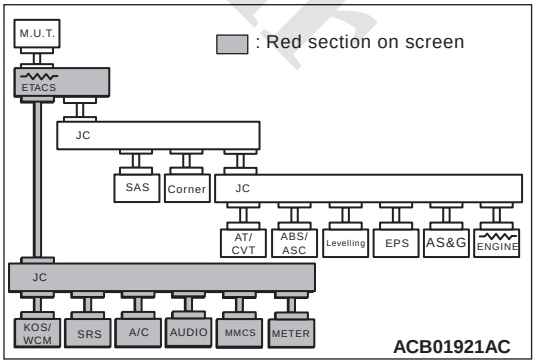

OK: The display of the M.U.T.-III is as shown in the figure.

Q: Does M.U.T.-III screen correspond to the illustration?

www.cargeek.ir

www.CarGeek.ir

YES : Repair the wiring harness between C-23 KOS-ECU connector and C-04 joint connector (CAN1).

NO : Check the KOS-ECU connector, and repair if necessary. If the KOS-ECU connector is in good condition, replace the KOS-ECU.

STEP 45. M.U.T.-III CAN bus diagnostics (checking the radio and CD player for internal short)

⚠ CAUTION

Strictly observe the specified wiring harness repair procedure. For details refer to .

Disconnect C-103 radio and CD player connector, and diagnose the CAN bus line.

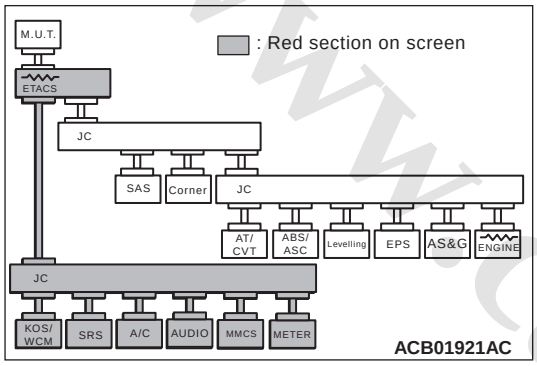

OK: The display of the M.U.T.-III is as shown in the figure.

Q: Does M.U.T.-III screen correspond to the illustration?

YES : Repair the wiring harness between C-103 radio and CD player connector and C-04 joint connector (CAN1).

NO : Check the radio and CD player connector, and repair if necessary. If the radio and CD player connector is in good condition, replace the radio and CD player.

STEP 46. M.U.T.-III CAN bus diagnostics (checking the CAN box unit for internal short)

⚠ CAUTION

Strictly observe the specified wiring harness repair procedure. For details refer to .

Disconnect C-54 CAN box unit connector, and diagnose the CAN bus line.

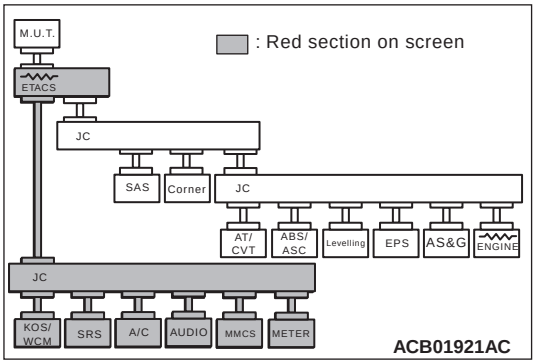

OK: The display of the M.U.T.-III is as shown in the figure.

Q: Does M.U.T.-III screen correspond to the illustration?

YES : Repair the wiring harness between C-54 CAN box unit connector and C-04 joint connector (CAN1).

NO : Check the CAN box unit connector, and repair if necessary. If the CAN box unit connector is in good condition, replace the CAN box unit.

STEP 47. Trouble symptom check

Diagnose the CAN bus line, and check that normal condition is displayed.

Q: Is the check result normal?

YES : The trouble can be an intermittent malfunction (Refer to GROUP 00 – How to use Troubleshooting/inspection Service Points – How to Cope with Intermittent Malfunction).

NO : Check the ETACS-ECU connector, and repair if necessary. If the ETACS-ECU connector is in good condition, replace the ETACS-ECU.

www.cargeek.ir

www.CarGeek.ir

CAN COMMUNICATION-RELATED DIAGNOSIS CODE (U-CODE) TABLE

M1548300302393

Code No.	Diagnostic item	Output ECU	Action
U0001	Bus Off (CAN-C)	Engine-ECU, AS&G-ECU, A/T-ECU, CVT-ECU, ABS-ECU, ASC-ECU, Electric power steering-ECU, Headlamp automatic levelling-ECU, ETACS-ECU, corner sensor/back sensor-ECU	CAN main bus line diagnostics
U0019	Bus Off (CAN-B)	KOS-ECU, WCM, SRS-ECU, Combination meter, Radio and CD player, CAN box unit, ETACS-ECU, A/C-ECU	
U0100	Engine time-out	AS&G-ECU, A/T-ECU, CVT-ECU, ABS-ECU, ASC-ECU, Electric power steering-ECU, Headlamp automatic levelling-ECU, Combination meter, ETACS-ECU, corner sensor/back sensor-ECU	
U0101	CVT/AT time-out	Engine-ECU <Except 1800-Diesel>, ASC-ECU, ETACS-ECU	
U0121	ABS/ASC time-out	Engine-ECU, AS&G-ECU, A/T-ECU, CVT-ECU, Electric power steering-ECU, Headlamp automatic levelling-ECU, ETACS-ECU, corner sensor/back sensor-ECU	
U0125	G and yaw rate sensor message time-out error/message error	ASC-ECU	
U0126	Steering wheel sensor time-out	ASC-ECU, ETACS-ECU	
U0131	EPS CAN timeout	Engine-ECU <1600, 1800, 2000>, ETACS-ECU	
U0141	ETACS-ECU time-out	Engine-ECU, AS&G-ECU, A/T-ECU, CVT-ECU, ABS-ECU, ASC-ECU, Electric power steering-ECU, KOS-ECU, WCM, SRS-ECU, Headlamp automatic levelling-ECU, Combination meter, Radio and CD player, CAN box unit, A/C-ECU, corner sensor/back sensor-ECU	
U0151	SRS time-out	KOS-ECU, WCM, Combination meter, Radio and CD player, CAN box unit, ETACS-ECU, A/C-ECU	

www.cargeek.ir

www.CarGeek.ir

Code No.	Diagnostic item	Output ECU	Action
U0155	Meter time-out	KOS-ECU, WCM, SRS-ECU, Radio and CD player, CAN box unit, ETACS-ECU,A/C-ECU	CAN main bus line diagnostics
U0164	A/C time-out	kOS-ECU, WCM, SRS-ECU, Combination meter, Radio and CD player, CAN box unit, ETACS-ECU	
U0167	CAN immobilizer (communication)	Engine-ECU <Except 1800-Diesel>	
U0168	WCM/KOS time-out	SRS-ECU, Combination meter, Radio and CD player, CAN box unit, ETACS-ECU, A/C-ECU	
U0181	Headlamp automatic levelling-ECU CAN timeout	ETACS-ECU	
U0184	Audio unit time-out	KOS-ECU, WCM, SRS-ECU, Combination meter, ETACS-ECU, A/C-ECU	
U0245	Audio visual navigation unit time-out	KOS-ECU, WCM, Combination meter, ETACS-ECU	
U0401	Engine malfunction detected	ASC-ECU, Electric power steering-ECU	Diagnose CAN main bus lines and confirm input signals.
U0415	Vehicle speed (CAN message) data input malfunction	Engine-ECU <1600, 1800-Petrol, 2000>	
U0428	Communication error in steering wheel sensor	ASC-ECU	
U1003	G and yaw rate sensor bus-off	ASC-ECU	
U1004	AS&G-ECU time-out	Engine-ECU <1600, 1800-Diesel>, ETACS-ECU	
U1005	Corner sensor/back sensor-ECU CAN timeout	ETACS-ECU	
U1108	Additional CAN B ECU detected	ETACS-ECU	
U1120	Bus line (CAN-C) low input		
U1121	Bus line (CAN-C) high input		
U1180	Combination meter time-out	AS&G-ECU	CAN main bus line diagnostics
U1201	Vehicle speed signal error		
U1414	Defective coding data	SRS-ECU	
U1415	Coding not completed/Data fail	CVT-ECU, ABS-ECU, ASC-ECU, KOS-ECU, WCM, SRS-ECU, Electric power steering-ECU, Headlamp automatic levelling-ECU, Combination meter, Radio and CD player, CAN box unit, A/C-ECU	
U1417	Implausible coding data	CVT-ECU, ABS-ECU, ASC-ECU, Electric power steering-ECU, KOS-ECU, WCM, Headlamp automatic levelling-ECU, CAN box unit	

www.cargeek.ir

www.CarGeek.ir

GROUP 55

HEATER, AIR CONDITIONER AND VENTILATION

www.cargeek.ir

CONTENTS

HEATER, AIR CONDITIONER AND VENTILATION 55A

AUTOMATIC AIR CONDITIONER 55B

www.cargeek.ir

www.CarGeek.ir

GROUP 55A

HEATER, AIR CONDITIONER AND VENTILATION

www.cargeek.ir

CONTENTS

GENERAL INFORMATION 55A-4

SERVICE SPECIFICATION(S) 55A-5

LUBRICANT(S) 55A-5

SPECIAL TOOL(S) 55A-6

TROUBLESHOOTING 55A-8

DIAGNOSIS TROUBLESHOOTING FLOW 55A-8
DIAGNOSIS FUNCTION. 55A-8
DIAGNOSIS CODE CHART 55A-9
DIAGNOSIS CODE PROCEDURES 55A-11
B1034 Ambient Temperature Sensor System 55A-11
B1031 Air Thermo Sensor System <Vehicles without A/C> 55A-12
B1031 Air Thermo Sensor System <Vehicles with A/C> 55A-13
B1000 Control Panel Communication Error <Vehicles without A/C> 55A-14
B1000 Control Panel Communication Error <Vehicles with A/C>. 55A-15
B1018 Temperature Control Dial SW Error <Vehicles without A/C> 55A-17
B1018 Temperature Control Dial SW Error <Vehicles with A/C>. 55A-18
B1003 Mode Dial SW Error <Vehicles without A/C> 55A-19
B1003 Mode Dial SW Error <Vehicles with A/C> 55A-20
B1021 Fan Dial SW Error <Vehicles without A/C> 55A-21
B1021 Fan Dial SW Error <Vehicles with A/C> 55A-22
B1079 Refrigerant Leaks. 55A-23
B2214 Control Panel Failure <Vehicles without A/C> 55A-24
B2214 Control Panel Failure <Vehicles with A/C> 55A-25
U1415 COOLING NOT COMPLETED 55A-26
U0019 Bus Off (CAN-B) 55A-27
U0141 ETACS CAN Time-out 55A-28
U0151 SRS CAN Time-out 55A-29
U0155 Meter CAN Time-out 55A-30
U0168 WCM CAN Time-out 55A-32
U0184 Audio CAN Time-out 55A-33
SYMPTOM CHART <Vehicles without A/C> 55A-34
SYMPTOM PROCEDURES <Vehicles without A/C> 55A-35
COMMUNICATION WITH THE M.U.T.-III IS NOT POSSIBLE. 55A-35
BLOWER MOTOR DOES NOT OPERATE. 55A-36
BLOWER AIR AMOUNT CANNOT BE CHANGED. 55A-39
INSIDE/OUTSIDE AIR CHANGEOVER IS NOT POSSIBLE. 55A-41
A/C OUTLET AIR TEMPERATURE DOES NOT INCREASE 55A-43
AIR OUTLET VENT CANNOT BE CHANGED. 55A-44
BLOWER MOTOR POWER SUPPLY SYSTEM 55A-46

www.cargeek.ir

www.CarGeek.ir

A/C-ECU POWER SUPPLY SYSTEM 55A-48
SYMPTOM CHART <Vehicles with A/C> . . 55A-50
SYMPTOM PROCEDURES 55A-35
COMMUNICATION WITH THE M.U.T.-III IS NOT POSSIBLE 55A-50
COOL AIR DOES NOT COME 55A-51
BLOWER MOTOR DOES NOT OPERATE 55A-52
BLOWER AIR AMOUNT CANNOT BE CHANGED. 55A-55
INSIDE/OUTSIDE AIR CHANGEOVER IS NOT POSSIBLE. 55A-57
THE COMPRESSOR DOES NOT WORK <Petrol engine> 55A-60
THE COMPRESSOR DOES NOT WORK <Diesel engine> 55A-63
THE A/C INDICATOR FLASHES. 55A-65
A/C OUTLET AIR TEMPERATURE DOES NOT INCREASE 55A-66
AIR OUTLET VENT CANNOT BE CHANGED. 55A-67
A/C PRESSURE SENSOR SYSTEM 55A-69
BLOWER MOTOR POWER SUPPLY SYSTEM 55A-71
A/C-ECU POWER SUPPLY SYSTEM 55A-74
THE PTC HEATER DOES NOT WORK <Vehicles with PTC heater> 55A-77
DATA LIST REFERENCE TABLE 55A-82
ACTUATOR TEST REFERENCE TABLE. . 55A-84
CHECK AT ECU TERMINAL 55A-84

ON-VEHICLE SERVICE. 55A-86
COMPRESSOR DRIVE BELT ADJUSTMENT 55A-86
REFRIGERANT LEVEL CHECK, DRAINING AND CHARGING. 55A-86
REFILLING OF OIL IN THE A/C SYSTEM . 55A-86
PERFORMANCE TEST <VEHICLES USING R-134a REFRIGERANT> 55A-86
DIAGNOSIS BY REFRIGERANT PRESSURE 55A-89
SIMPLE INSPECTION OF THE A/C PRESSURE SENSOR. 55A-92
POWER RELAY CHECK 55A-93
IDLE-UP OPERATION CHECK 55A-95
CLEAN AIR FILTER REPLACEMENT PROCEDURE 55A-96

HEATER CONTROL UNIT. 55A-96
HEATER CONTROL UNIT REMOVAL AND INSTALLATION. 55A-96

HEATER UNIT AND BLOWER ASSEMBLY 55A-97
HEATER UNIT AND BLOWER ASSEMBLY REMOVAL AND INSTALLATION 55A-97
HEATER UNIT AND BLOWER ASSEMBLY DISASSEMBLY AND REASSEMBLY 55A-101
INSPECTION. 55A-102

HEATER HOSE <Diesel engine> . . . 55A-102
HEATER HOSE REMOVAL AND INSTALLATION 55A-102

MODE SELECTION DAMPER CONTROL MOTOR, AIR MIXING DAMPER CONTROL MOTOR, OUTSIDE/INSIDE AIR SELECTION DAMPER CONTROL MOTOR, POWER TRANSISTOR AND BLOWER MOTOR 55A-103
MODE SELECTION DAMPER CONTROL MOTOR, AIR MIXING DAMPER CONTROL MOTOR, OUTSIDE/INSIDE AIR SELECTION DAMPER CONTROL MOTOR, POWER TRANSISTOR AND BLOWER MOTOR REMOVAL AND INSTALLATION . 55A-103
INSPECTION. 55A-104

AMBIENT TEMPERATURE SENSOR 55A-105
AMBIENT TEMPERATURE SENSOR REMOVAL AND INSTALLATION 55A-105
INSPECTION. 55A-105

A/C-ECU 55A-106
A/C-ECU REMOVAL AND INSTALLATION 55A-106

PTC HEATER <Vehicles with PTC heater> 55A-107
PTC HEATER REMOVAL AND INSTALLATION 55A-107
INSPECTION. 55A-108

COMPRESSOR ASSEMBLY 55A-109
COMPRESSOR ASSEMBLY REMOVAL AND INSTALLATION <1600 (M/T)> 55A-109
COMPRESSOR ASSEMBLY REMOVAL AND INSTALLATION <Except 1600 (M/T)> 55A-111
COMPRESSOR ASSEMBLY INSPECTION 55A-112
COMPRESSOR ASSEMBLY DISASSEMBLY AND ASSEMBLY <1600 (M/T)> 55A-113
COMPRESSOR ASSEMBLY DISASSEMBLY AND ASSEMBLY <Except 1600 (M/T)> 55A-116
COMPRESSOR ASSEMBLY INSPECTION

www.cargeek.ir

www.CarGeek.ir

(DISASSEMBLY AND REASSEMBLY) . . . 55A-118

CONDENSER ASSEMBLY 55A-120

CONDENSER ASSEMBLY REMOVAL AND INSTALLATION. 55A-120

REFRIGERANT LINE. 55A-121

REFRIGERANT LINE REMOVAL AND INSTALLATION <Petrol engine> 55A-121

REFRIGERANT LINE REMOVAL AND INSTALLATION <Diesel engine> 55A-122

DUCTS 55A-124

DUCT REMOVAL AND INSTALLATION. . . 55A-124

VENTILATORS 55A-126

VENTILATOR REMOVAL AND INSTALLATION 55A-126

www.cargeek.ir

www.cargeek.ir

www.CarGeek.ir

GENERAL INFORMATION

M1551000100336

In addition to the normal control, A/C-ECU of the vehicle with AS&G system performs the following control.

NOTE: For general information of the AS&G system, refer to GROUP 17, Auto Stop & Go (AS&G) System .

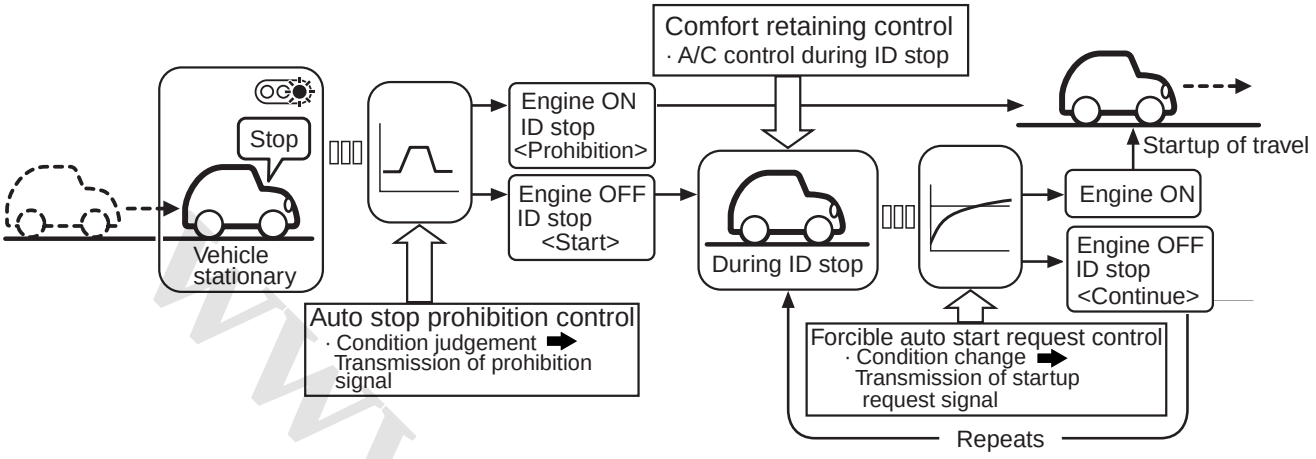

AC905481 AB

AUTO STOP PROHIBITION CONTROL

Under the conditions below with the blower fan ON, the A/C-ECU transmits the auto stop prohibition signal to the AS&G-ECU.

- Outside air temperature is low.
- The outlet mode is set to DEF.
- The outlet temperature is high with the A/C switch ON.
- The setting temperature is changed by 3 degrees or more <Vehicles with automatic air conditioner>.
- The interior temperature is low <Vehicles with automatic air conditioner>.
- With the air volume/outlet mode set to Auto, MAX HOT or MAX COOL is attained <Vehicles with automatic air conditioner>.

FORCIBLE AUTO START REQUEST CONTROL

Under the conditions below with the blower fan ON during auto stop, the A/C-ECU transmits the start request signal to the AS&G-ECU.

- The outlet temperature rises with the A/C switch ON.
- The outlet mode that is not in DEF is changed to DEF.
- The A/C switch is changed from OFF to ON.
- The setting temperature is changed by 3 degrees or more <Vehicles with automatic air conditioner>.
- With the air volume/outlet mode set to Auto, it is changed to MAX HOT or MAX COOL <Vehicles with automatic air conditioner>.

COMFORT RETAINING CONTROL

When detecting that the auto stop is underway, A/C-ECU performs the following controls to retain the interior comfort of the vehicle.

- The blower fan level will be decreased. The outlet temperature rising is restricted by reducing the air volume that passes though the evaporator to the extent possible.
- To prevent interior temperature rising by intrusion of the outside air when the outside temperature is high, the opening angle of the interior/exterior damper will be modified. By reducing the intake amount of the outside air, the interior comfort of the vehicle is retained. When the outside temperature is low, a certain amount of outside air is taken to defog the windows.
- The air mix damper will be closed to prevent heat from the heater core, minimising the effect to the interior.

www.cargeek.ir

www.CarGeek.ir

SERVICE SPECIFICATIONS

M1551000301708

Item			Standard value
Idle speed r/min (N or P range)	1600		750 ± 50
	1800 Petrol	M/T	650 ± 50
		CVT	700 ± 50
	1800 Diesel		650 ± 50
	2000		700 ± 50
Idle-up speed r/min (N or P range)	1600		750 ± 100
	1800 Petrol, 2000		850 ± 100
	1800 Diesel		900 ± 100
Air gap (magnetic clutch) mm			0.25 – 0.45
A/C refrigerant temperature switch operating temperature °C	Being turned off		135
	Being turned on		120

LUBRICANTS

M1551000401385

Item		Specified lubricant	Quantity
Compressor refrigerant unit lubricant mL	1600 (M/T)	SUN PAG 56 or S10X	60 – 80 (target value: 60)
	Except 1600 (M/T)		70 – 90 (target value: 70)
Each connection of refrigerant line			As required
Refrigerant g		HFC134a (R134a)	500 ± 20

www.cargeek.ir

www.CarGeek.ir

SPECIAL TOOLS

M1551000601226

Tool	Number	Name	Use
MB990810	MB990810	Side bearing puller	A/C compressor rotor removal and installation
MB992623	MB992623	Guide	
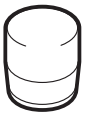 MB992624	MB992624	Pusher	
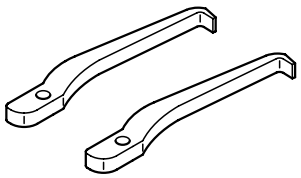	MD999566	Claw	
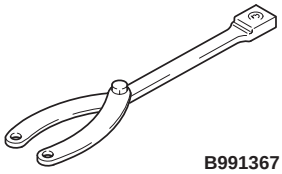 B991367	MB991367	Special spanner	Removal and installation of the A/C compressor armature mounting nut
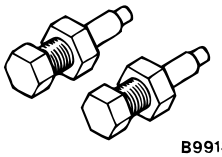 B991386	MB991386	Pin	
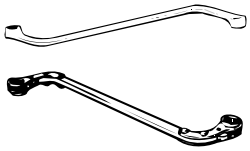 MB990900	MB990900 or MB991164	Door hinge adjusting wrench	Removal and installation of front deck cross member heater unit assembly
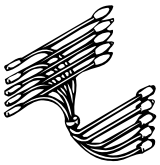 MB991658	MB991658	Test harness	Inspection of the A/C pressure sensor

www.cargeek.ir

www.CarGeek.ir

Tool	Number	Name	Use
a b c d DO NOT USE MB991223	MB991223 a. MB991219 b. MB991220 c. MB991221 d. MB991222	Harness set a. Test harness b. LED harness c. LED harness adapter d. Probe	Making voltage and resistance measurements during troubleshooting a. Connect pin contact pressure inspection b. Power circuit inspection c. Power circuit inspection d. Commercial tester connection
MB992006	MB992006	Extra fine probe	Continuity check and voltage measurement at harness wire or connector

www.cargeek.ir
www.cargeek.ir

www.CarGeek.ir

Tool	Number	Name	Use
a 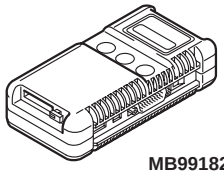 MB991824 b 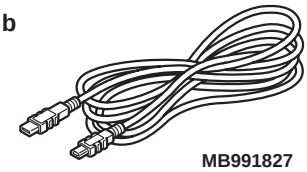 MB991827 c 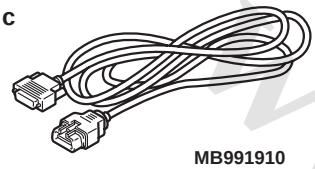 MB991910 d 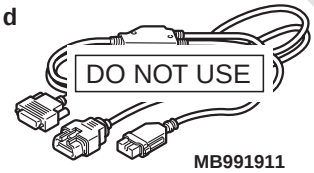 MB991911 e 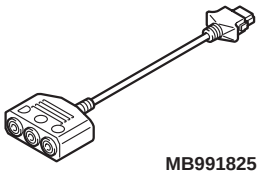 MB991825 f 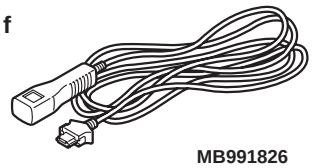 MB991826 MB991955	MB991955 a. MB991824 b. MB991827 c. MB991910 d. MB991911 e. MB991825 f. MB991826	M.U.T.-III sub-assembly a. Vehicle Communication Interface (V. C. I). b. USB cable c. M.U.T.-III main harness A (applicable to vehicles with CAN communication) d. M.U.T.-III main harness B (applicable to vehicles without CAN communication) e. Measurement adapter f. Trigger harness	⚠ CAUTION **For vehicles with CAN communication, use M.U.T.-III main harness A to send simulated vehicle speed. If you connect M.U.T.-III main harness B instead, the CAN communication does not function correctly.** Check the A/C (The M.U.T.-III diagnosis codes display, service data display and actuator test)

TROUBLESHOOTING

DIAGNOSIS TROUBLESHOOTING FLOW

M1554004700975

Refer to GROUP 00, How to Use Troubleshooting/ Inspection Service Points – Contents of Trouble-shooting

DIAGNOSIS FUNCTION

M1554004800905

READING DIAGNOSIS CODES

Refer to GROUP 00, How to Use Troubleshooting/ Inspection Service Points – Diagnosis Function .

ERASING DIAGNOSIS CODES

Refer to GROUP 00, How to Use Troubleshooting/ Inspection Service Points – Diagnosis Function .

www.cargeek.ir

www.CarGeek.ir

DIAGNOSIS CODE CHART

M1554004901961

<VEHICLES WITHOUT A/C>

Code No.	Diagnostic item	Reference page	Service data display contents when diagnosis code is set
B1034 (set by ETACS-ECU)	Ambient temperature sensor system (short circuit)		20°C
B1035 (set by ETACS-ECU)	Ambient temperature sensor system (open circuit)		
B1031	Fin thermo sensor system (short circuit) <Vehicles without A/C>		Air recirculation position: Interior temperature Fresh air position: Fresh air + 10°C
B1032	Fin thermo sensor system (open circuit) <Vehicles without A/C>		
B1000	Communication error with control panel <Vehicles without A/C>		–
B1018	Temperature control dial SW error <Vehicles without A/C>		–
B1003	Mode dial SW error <Vehicles without A/C>		–
B1021	Fan dial SW error <Vehicles without A/C>		–
B2214	Control panel failure <Vehicles without A/C>		–
U1415	Coding Not Completed		–
U0019	Bus off (CAN-B)		–
U0141	ETACS-ECU CAN time-out		–
U0151	SRS CAN time-out		–
U0155	Meter CAN time-out		–
U0168	WCM CAN time-out		–
U0184	Audio CAN time-out		–

NOTE: Note that diagnosis code Nos. B1034 and B1035 will be set by the ETACS-ECU separately.

<VEHICLES WITH A/C>

Code No.	Diagnostic item	Reference page	Service data display contents when diagnosis code is set
B1034 (set by ETACS-ECU)	Ambient temperature sensor system (short circuit)		20°C
B1035 (set by ETACS-ECU)	Ambient temperature sensor system (open circuit)		

www.cargeek.ir

www.CarGeek.ir

Code No.	Diagnostic item	Reference page	Service data display contents when diagnosis code is set
B1031	Fin thermo sensor system (short circuit) <Vehicles with A/C>		Air recirculation position: Interior temperature Fresh air position: Fresh air + 10°C
B1032	Fin thermo sensor system (open circuit) <Vehicles with A/C>		
B1000	Communication error with control panel <Vehicles with A/C>		–
B1018	Temperature control dial SW error <Vehicles with A/C>		–
B1003	Mode dial SW error <Vehicles with A/C>		–
B1021	Fan dial SW error <Vehicles with A/C>		–
B1079	A/C refrigerant leaks		–
B2214	Control panel failure <Vehicles with A/C>		–
U1415	Coding Not Completed		–
U0019	Bus off (CAN-B)		–
U0141	ETACS-ECU CAN time-out		–
U0151	SRS CAN time-out		–
U0155	Meter CAN time-out		–
U0168	WCM CAN time-out		–
U0184	Audio CAN time-out		–

NOTE: Note that diagnosis code Nos. B1034 and B1035 will be set by the ETACS-ECU separately.

www.cargeek.ir
www.cargeek.ir

www.CarGeek.ir

DIAGNOSIS CODE PROCEDURES

Code No.B1034: Ambient temperature sensor system (short circuit)
Code No.B1035: Ambient temperature sensor system (open circuit)

Ambient Temperature Sensor Circuit

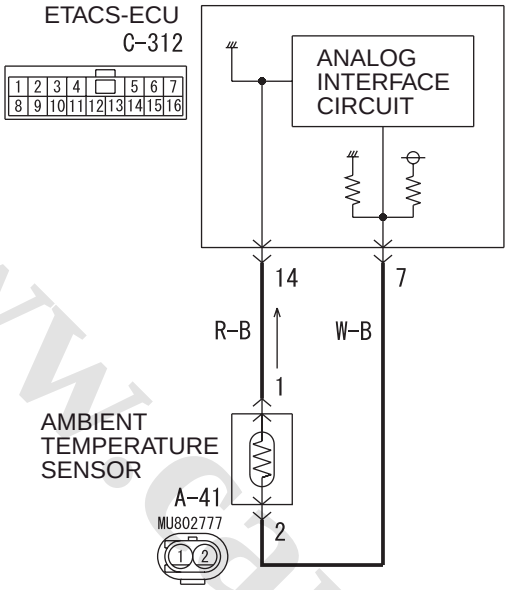

Wire colour code
B : Black LG : Light green G : Green L : Blue W : White Y : Yellow SB : Sky blue
BR : Brown O : Orange GR : Grey R : Red P : Pink V : Violet PU : Purple SI : Silver

AC802248
W8G55X001A

Connectors: A-41

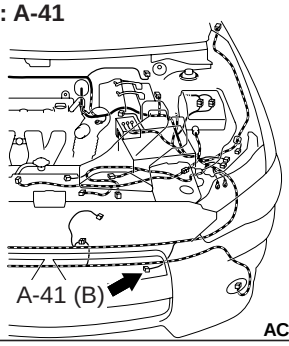

AC612690 AH

Connector: C-312 <RHD>
ETACS-ECU

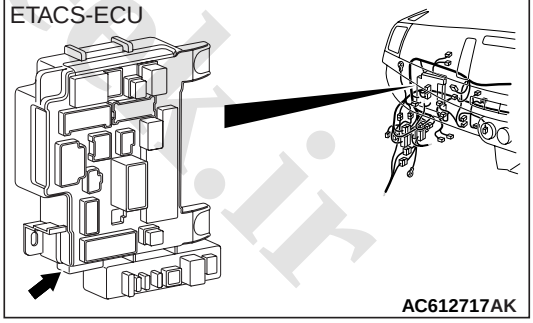

AC612717 AK

Connector: C-312 <LHD>
ETACS-ECU

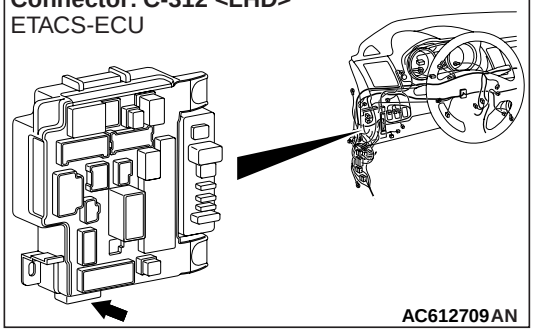

AC612709 AN

COMMENTS ON TROUBLE SYMPTOM

This code is set when the ambient temperature sensor circuit is short (Code No.B1034) or is open (Code No.B1035).

POSSIBLE CAUSES

- Malfunction of the ambient temperature sensor
- Damaged wiring harness or connectors
- Malfunction of the ETACS-ECU

www.cargeek.ir

www.CarGeek.ir

DIAGNOSIS PROCEDURE

STEP 1. Connector check: A-41 ambient temperature sensor connector and C-312 ETACS-ECU connector

Q: Is the check result normal?
YES : Go to Step 2.
NO : Repair the connector.

STEP 2. Check the wiring harness between A-41 ambient temperature sensor connector (terminals 1 and 2) and C-312 ETACS-ECU connector (terminals 14 and 7).

- Check the sensor signal line and earth line for open or short circuit.

Q: Is the check result normal?
YES : Go to Step 3.
NO : Repair the connector.

STEP 3. Check the ambient temperature sensor
Refer to .

Q: Is the check result normal?
YES : Go to Step 4.
NO : Replace the ambient temperature sensor.

STEP 4. Check whether the diagnosis code is reset

Q: Is the diagnosis code set?
YES : Replace the ETACS-ECU.
NO : The trouble can be an intermittent malfunction (Refer to GROUP 00, How to Cope with Intermittent Malfunction).

Code No.B1031: Fin thermo Sensor system (short circuit) <Vehicles without A/C>
Code No.B1032: Fin thermo Sensor system (open circuit) <Vehicles without A/C>

Fin Thermo Sensor Circuit

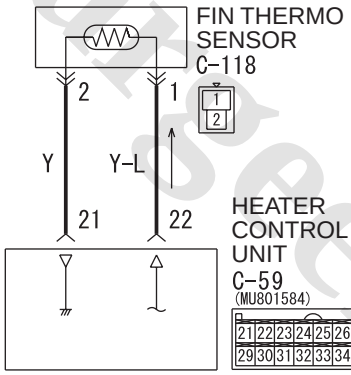

Wire colour code
B : Black LG : Light green G : Green L : Blue W : White Y : Yellow SB : Sky blue
BR : Brown O : Orange GR : Grey R : Red P : Pink V : Violet PU : Purple SI : Silver

AC801264
W8G55X002A

Connectors: C-59, C-118 <LHD>

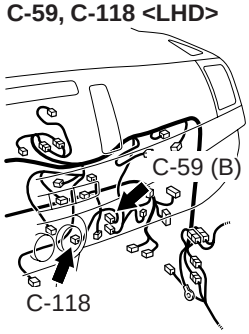

AC612706BO

COMMENTS ON TROUBLE SYMPTOM
This code is set when the fin thermo sensor circuit is short (Code No.B1031) or is open (Code No.B1032).

PROBABLE CAUSES
- Malfunction of the fin thermo sensor
- Damaged wiring harness or connectors
- Malfunction of the heater control unit

www.cargeek.ir

www.CarGeek.ir

DIAGNOSIS PROCEDURE

STEP 1. Connector check: C-59 heater control unit connector and C-118 fin thermo sensor connector

Q: Is the check result normal?
YES : Go to Step 2.
NO : Repair the connector.

STEP 2. Check the wiring harness between C-59 heater control unit connector (terminals 21 and 22) and C-118 fin thermo sensor connector (terminals 2 and 1).

- Check the sensor signal line and earth line for open or short circuit.

Q: Is the check result normal?
YES : Go to Step 3.
NO : Repair the wiring harness.

STEP 3. Check the fin thermo sensor.
Refer to .

Q: Is the check result normal?
YES : Go to Step 4.
NO : Replace the fin thermo sensor.

STEP 4. Check whether the diagnosis code is reset.

Q: Is the diagnosis code set?
YES : Replace the heater control unit.
NO : The trouble can be an intermittent malfunction (Refer to GROUP 00, How to Cope with Intermittent Malfunction).

Code No.B1031: Fin thermo Sensor system (short circuit) <Vehicles with A/C>
Code No.B1032: Fin thermo Sensor system (open circuit) <Vehicles with A/C>

Fin Thermo Sensor Circuit

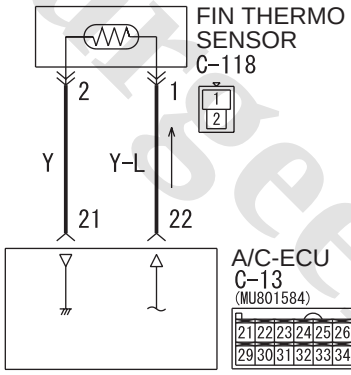

Wire colour code
B : Black LG : Light green G : Green L : Blue W : White Y : Yellow SB : Sky blue
BR : Brown O : Orange GR : Grey R : Red P : Pink V : Violet PU : Purple SI : Silver

W8G55X002A

Connectors: C-13, C-118 <LHD>

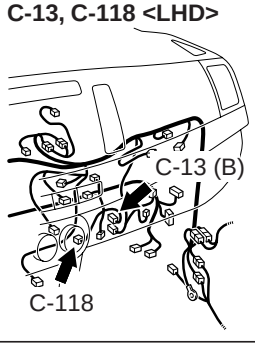

AC612706AD

Connectors: C-13, C-118 <RHD>

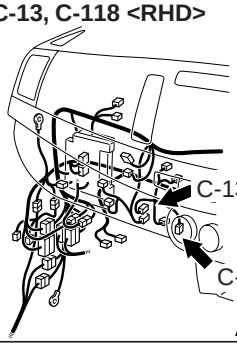

AC612710AR

COMMENTS ON TROUBLE SYMPTOM
This code is set when the fin thermo sensor circuit is short (Code No.B1031) or is open (Code No.B1032).

www.cargeek.ir

www.CarGeek.ir

PROBABLE CAUSES

- Malfunction of the fin thermo sensor
- Damaged wiring harness or connectors
- Malfunction of the A/C-ECU

DIAGNOSIS PROCEDURE

STEP 1. Connector check: C-13 A/C-ECU connector and C-118 fin thermo sensor connector

Q: Is the check result normal?
YES : Go to Step 2.
NO : Repair the connector.

STEP 2. Check the wiring harness between C-13 A/C-ECU connector (terminals 21 and 22) and C-118 fin thermo sensor connector (terminals 2 and 1).

- Check the sensor signal line and earth line for open or short circuit.

Q: Is the check result normal?
YES : Go to Step 3.
NO : Repair the wiring harness.

STEP 3. Check the fin thermo sensor.
Refer to .

Q: Is the check result normal?
YES : Go to Step 4.
NO : Replace the fin thermo sensor.

STEP 4. Check whether the diagnosis code is reset.

Q: Is the diagnosis code set?
YES : Replace the A/C-ECU.
NO : The trouble can be an intermittent malfunction (Refer to GROUP 00, How to Cope with Intermittent Malfunction).

Code No. B1000: Communication error with control panel <Vehicles without A/C>

Heater Control Panel Circuit

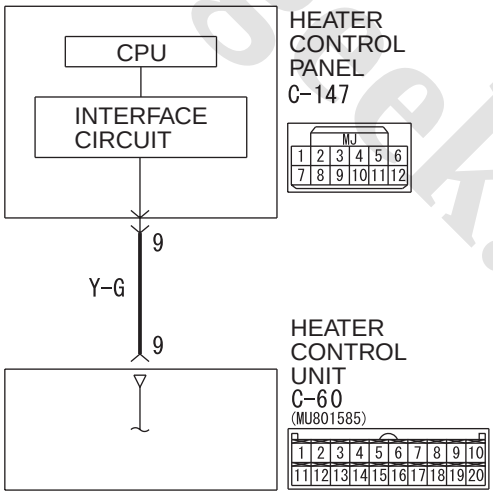

Wire colour code
B : Black LG : Light green G : Green L : Blue W : White Y : Yellow SB : Sky blue
BR : Brown O : Orange GR : Grey R : Red P : Pink V : Violet PU : Purple SI : Silver

ACA00851
W8G55X003A

www.cargeek.ir

www.CarGeek.ir

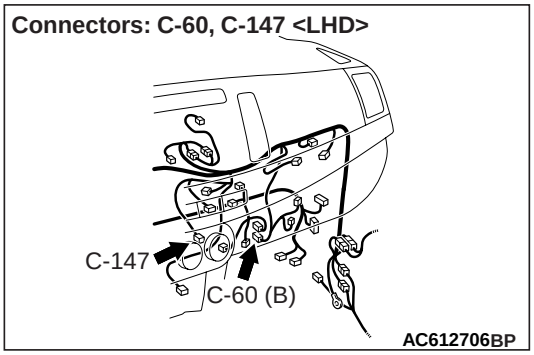

COMMENTS ON TROUBLE SYMPTOM

This code will be set when the heater control unit cannot receive information from the heater control panel.

PROBABLE CAUSES

- Malfunction of the heater control panel
- Damaged wiring harness or connectors
- Malfunction of the heater control unit

DIAGNOSIS PROCEDURE

STEP 1. Connector check: C-147 heater control panel connector and C-60 heater control unit connector

Q: Is the check result normal?

YES : Go to Step 2.
NO : Repair the connector.

STEP 2. Check the wiring harness between C-147 heater control panel connector terminal No. 9 and C-60 heater control unit connector terminal No. 9.

- Check the heater control panel signal line for open or short circuit.

Q: Is the check result normal?

YES : Go to Step 3.
NO : Repair the wiring harness.

STEP 3. Check whether the diagnosis code is reset.

Replace the heater control panel, and erase the diagnosis code. Then check that no diagnosis code is being set.

Q: Is the diagnosis code set?

YES : Replace the heater control unit.
NO : The trouble can be an intermittent malfunction (Refer to GROUP 00, How to Cope with Intermittent Malfunction).

Code No. B1000: Communication error with control panel <Vehicles with A/C>

A/C Control Panel Circuit

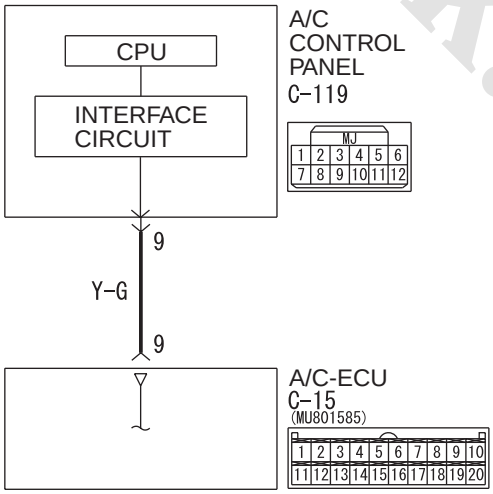

Wire colour code
B : Black LG : Light green G : Green L : Blue W : White Y : Yellow SB : Sky blue
BR : Brown O : Orange GR : Grey R : Red P : Pink V : Violet PU : Purple SI : Silver

ACA00799
W8G55X003A

www.cargeek.ir

www.CarGeek.ir

Connectors: C-15, C-119 <LHD>

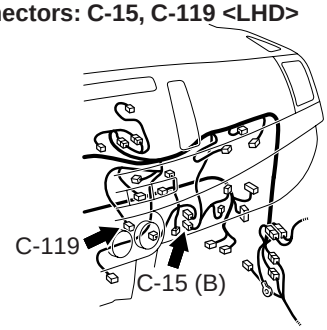

AC612706AE

Connector: C-15 <RHD>

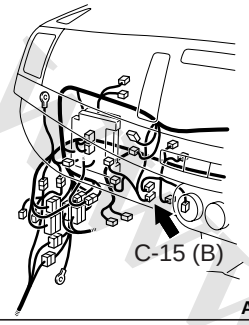

AC612710AS

Connector: C-119 <RHD>

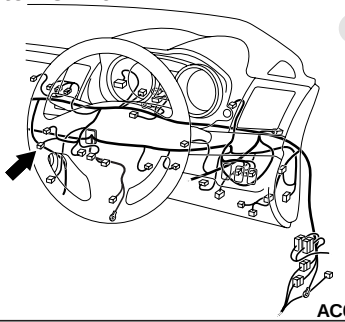

AC612711AG

COMMENTS ON TROUBLE SYMPTOM

This code will be set when the A/C-ECU cannot receive information from the A/C control panel.

PROBABLE CAUSES

- Malfunction of the A/C control panel
- Damaged wiring harness or connectors
- Malfunction of the A/C-ECU

DIAGNOSIS PROCEDURE

STEP 1. Connector check: C-119 A/C control panel connector and C-15 A/C-ECU connector

Q: Is the check result normal?
YES : Go to Step 2.
NO : Repair the connector.

STEP 2. Check the wiring harness between C-119 A/C control panel connector terminal No. 9 and C-15 A/C-ECU connector terminal No. 9.

- Check the A/C control panel signal line for open or short circuit.

Q: Is the check result normal?
YES : Go to Step 3.
NO : Repair the wiring harness.

STEP 3. Check whether the diagnosis code is reset.

Replace the A/C control panel, and erase the diagnosis code. Then check that no diagnosis code is being set.

Q: Is the diagnosis code set?
YES : Replace the A/C-ECU.
NO : The trouble can be an intermittent malfunction (Refer to GROUP 00, How to Cope with Intermittent Malfunction).

www.cargeek.ir

www.CarGeek.ir

Code No. B1018: Temperature control dial SW error <Vehicles without A/C>

Heater Control Panel Circuit

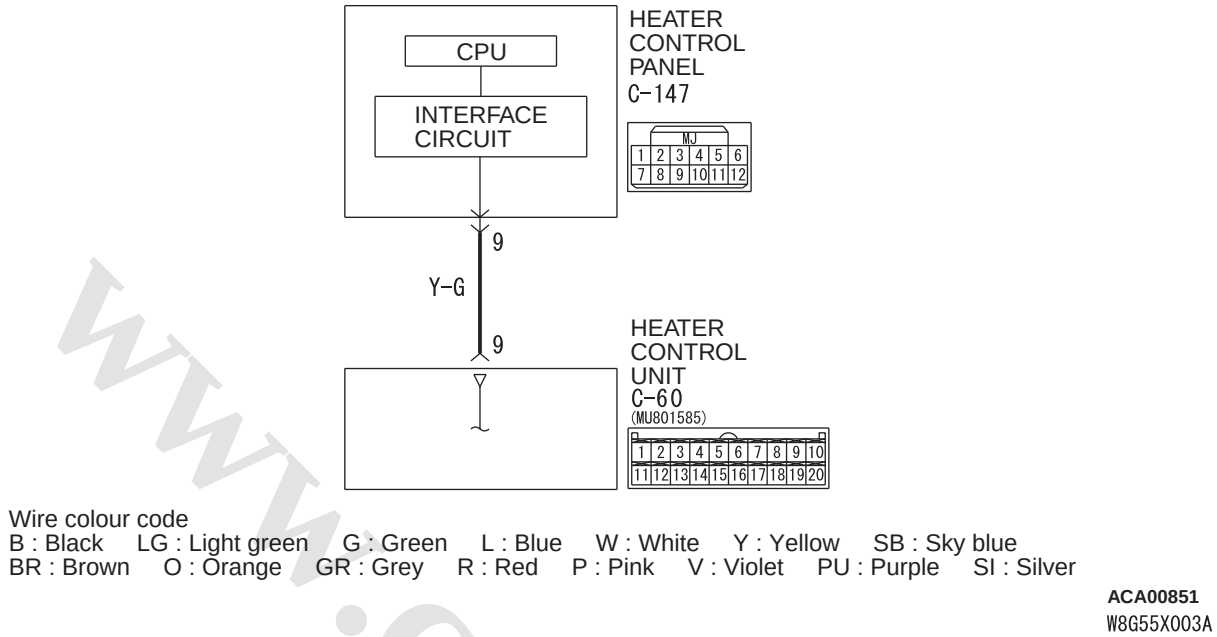

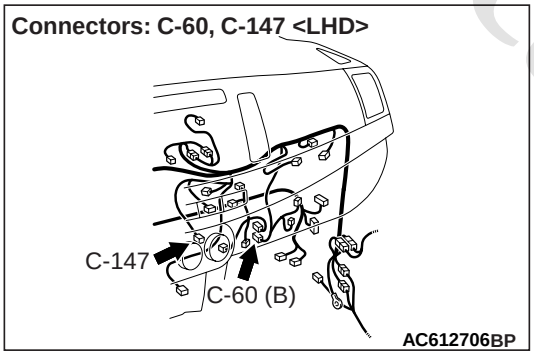

COMMENTS ON TROUBLE SYMPTOM

This code will be set when the temperature control dial position on the AC control panel is detected as abnormal.

PROBABLE CAUSES

- Malfunction of the heater control panel
- Damaged wiring harness or connectors
- Malfunction of the heater control unit

DIAGNOSIS PROCEDURE

STEP 1. Connector check: C-147 heater control panel connector and C-60 heater control unit connector

Q: Is the check result normal?

YES : Go to Step 2.
NO : Repair the connector.

STEP 2. Check the wiring harness between C-147 heater control panel connector terminal No. 9 and C-60 heater control unit connector terminal No. 9.

- Check the heater control panel signal line for open or short circuit.

Q: Is the check result normal?

YES : Go to Step 3.
NO : Repair the wiring harness.

STEP 3. Check whether the diagnosis code is reset.

Replace the heater control panel, and erase the diagnosis code. Then check that no diagnosis code is being set.

Q: Is the diagnosis code set?

YES : Replace the heater control unit.
NO : The trouble can be an intermittent malfunction (Refer to GROUP 00, How to Cope with Intermittent Malfunction).

www.cargeek.ir

www.CarGeek.ir

Code No. B1018: Temperature control dial SW error <Vehicles with A/C>

A/C Control Panel Circuit

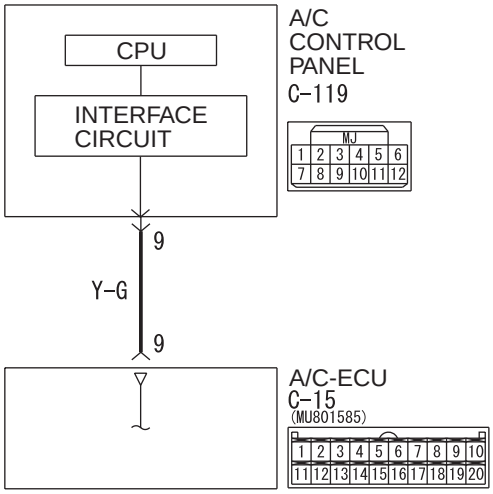

Wire colour code
B : Black LG : Light green G : Green L : Blue W : White Y : Yellow SB : Sky blue
BR : Brown O : Orange GR : Grey R : Red P : Pink V : Violet PU : Purple SI : Silver

ACA00799
W8G55X003A

Connectors: C-15, C-119 <LHD>

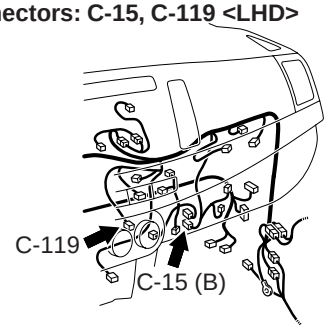

AC612706AE

Connector: C-119 <RHD>

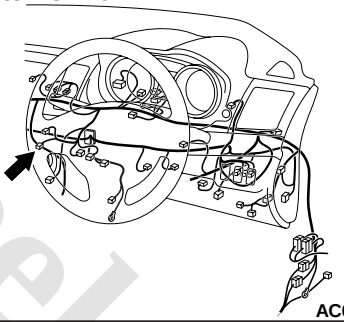

AC612711AG

Connector: C-15 <RHD>

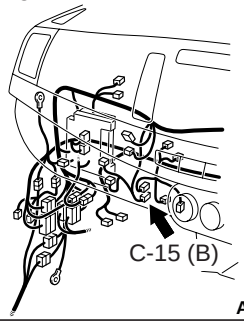

AC612710AS

COMMENTS ON TROUBLE SYMPTOM

This code will be set when the temperature control dial position on the AC control panel is detected as abnormal.

PROBABLE CAUSES

- Malfunction of the A/C control panel
- Damaged wiring harness or connectors
- Malfunction of the A/C-ECU

DIAGNOSIS PROCEDURE

STEP 1. Connector check: C-119 A/C control panel connector and C-15 A/C-ECU connector

Q: Is the check result normal?

YES : Go to Step 2.
NO : Repair the connector.

www.cargeek.ir

www.CarGeek.ir

STEP 2. Check the wiring harness between C-119 A/C control panel connector terminal No. 9 and C-15 A/C-ECU connector terminal No. 9.

- Check the A/C control panel signal line for open or short circuit.

Q: Is the check result normal?
YES : Go to Step 3.
NO : Repair the wiring harness.

STEP 3. Check whether the diagnosis code is reset.

Replace the A/C control panel, and erase the diagnosis code. Then check that no diagnosis code is being set.

Q: Is the diagnosis code set?
YES : Replace the A/C-ECU.
NO : This diagnosis is complete.

Code No. B1003: Mode dial SW error <Vehicles without A/C>

Heater Control Panel Circuit

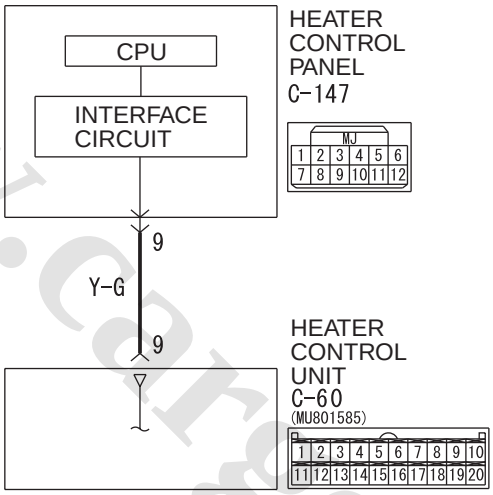

Wire colour code
B : Black LG : Light green G : Green L : Blue W : White Y : Yellow SB : Sky blue
BR : Brown O : Orange GR : Grey R : Red P : Pink V : Violet PU : Purple SI : Silver

ACA00851
W8G55X003A

Connectors: C-60, C-147 <LHD>

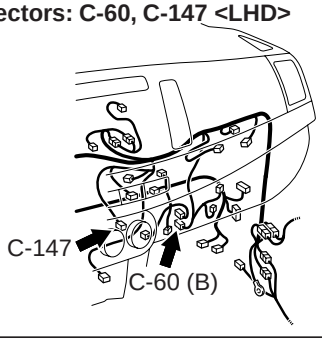

AC612706BP

COMMENTS ON TROUBLE SYMPTOM

This code will be set when the air outlet changeover dial position on the AC control panel is detected as abnormal.

PROBABLE CAUSES

- Malfunction of the heater control panel
- Damaged wiring harness or connectors
- Malfunction of the heater control unit

DIAGNOSIS PROCEDURE

STEP 1. Connector check: C-147 heater control panel connector and C-60 heater control unit connector

Q: Is the check result normal?
YES : Go to Step 2.
NO : Repair the connector.

STEP 2. Check the wiring harness between C-147 heater control panel connector terminal No. 9 and C-60 heater control unit connector terminal No. 9.

- Check the heater control panel signal line for open or short circuit.

Q: Is the check result normal?
YES : Go to Step 3.
NO : Repair the wiring harness.

www.cargeek.ir

www.CarGeek.ir

STEP 3. Check whether the diagnosis code is reset.
Replace the heater control panel, and erase the diagnosis code. Then check that no diagnosis code is being set.

Q: Is the diagnosis code set?

YES : Replace the heater control unit.
NO : The trouble can be an intermittent malfunction (Refer to GROUP 00, How to Cope with Intermittent Malfunction).

Code No. B1003: Mode dial SW error <Vehicles with A/C>

A/C Control Panel Circuit

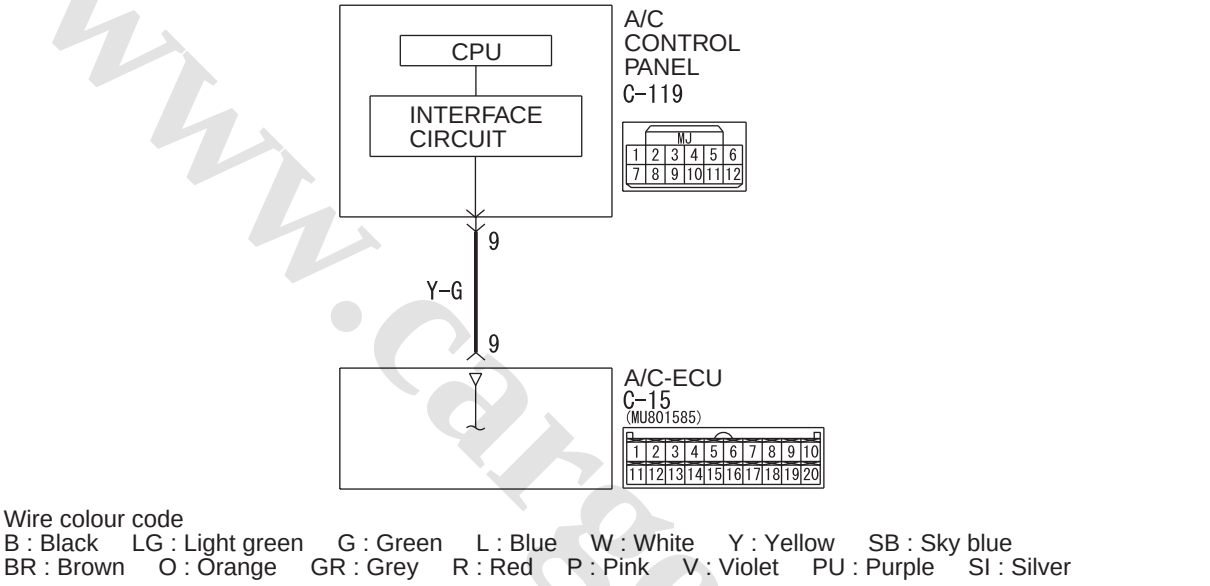

Connectors: C-15, C-119 <LHD>

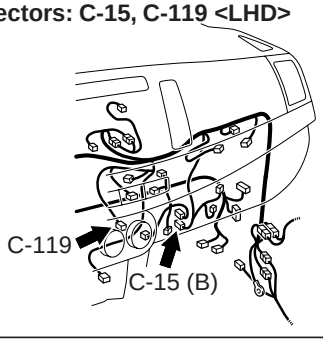

Connector: C-119 <RHD>

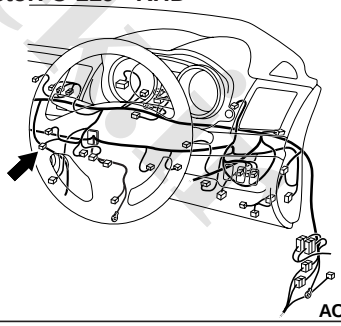

Connector: C-15 <RHD>

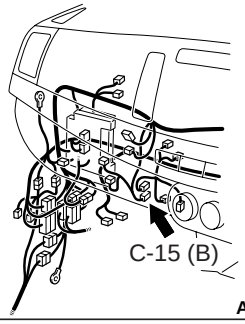

COMMENTS ON TROUBLE SYMPTOM
This code will be set when the air outlet changeover dial position on the AC control panel is detected as abnormal.

PROBABLE CAUSES
- Malfunction of the A/C control panel
- Damaged wiring harness or connectors
- Malfunction of the A/C-ECU

www.cargeek.ir

www.CarGeek.ir

DIAGNOSIS PROCEDURE

STEP 1. Connector check: C-119 A/C control panel connector and C-15 A/C-ECU connector

Q: Is the check result normal?
YES : Go to Step 2.
NO : Repair the connector.

STEP 2. Check the wiring harness between C-119 A/C control panel connector terminal No. 9 and C-15 A/C-ECU connector terminal No. 9.

- Check the A/C control panel signal line for open or short circuit.

Q: Is the check result normal?
YES : Go to Step 3.
NO : Repair the wiring harness.

STEP 3. Check whether the diagnosis code is reset

Replace the A/C control panel, and erase the diagnosis code. Then check that no diagnosis code is being set.

Q: Is the diagnosis code set?
YES : Replace the A/C-ECU.
NO : This diagnosis is complete.

Code No. B1021: Fan dial SW error <Vehicles without A/C>

Heater Control Panel Circuit

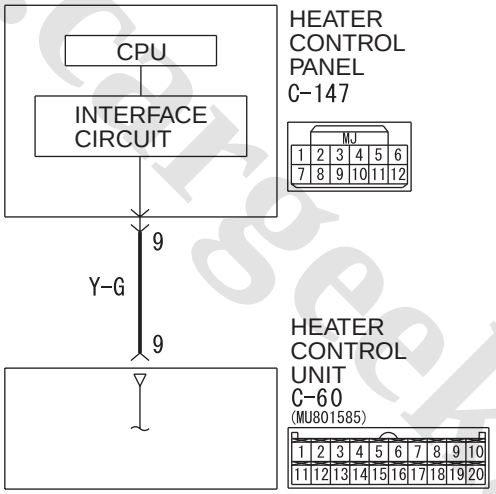

Wire colour code
B : Black LG : Light green G : Green L : Blue W : White Y : Yellow SB : Sky blue
BR : Brown O : Orange GR : Grey R : Red P : Pink V : Violet PU : Purple SI : Silver

ACA00851
W8G55X003A

Connectors: C-60, C-147 <LHD>

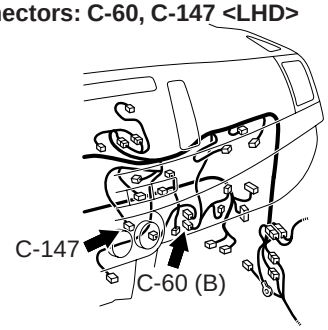

AC612706BP

COMMENTS ON TROUBLE SYMPTOM

This code will be set when the air volume control dial position on the AC control panel is detected as abnormal.

PROBABLE CAUSES

- Malfunction of the heater control panel
- Damaged wiring harness or connectors
- Malfunction of the heater control unit

www.cargeek.ir

www.CarGeek.ir

DIAGNOSIS PROCEDURE

STEP 1. Connector check: C-147 heater control panel connector and C-60 heater control unit connector

Q: Is the check result normal?
YES : Go to Step 2.
NO : Repair the connector.

STEP 2. Check the wiring harness between C-147 heater control panel connector terminal No. 9 and C-60 heater control unit connector terminal No. 9.

- Check the heater control panel signal line for open or short circuit.

Q: Is the check result normal?
YES : Go to Step 3.
NO : Repair the wiring harness.

STEP 3. Check whether the diagnosis code is reset.

Replace the heater control panel, and erase the diagnosis code. Then check that no diagnosis code is being set.

Q: Is the diagnosis code set?
YES : Replace the heater control unit.
NO : The trouble can be an intermittent malfunction (Refer to GROUP 00, How to Cope with Intermittent Malfunction).

Code No. B1021: Fan dial SW error <Vehicles with A/C>

A/C Control Panel Circuit

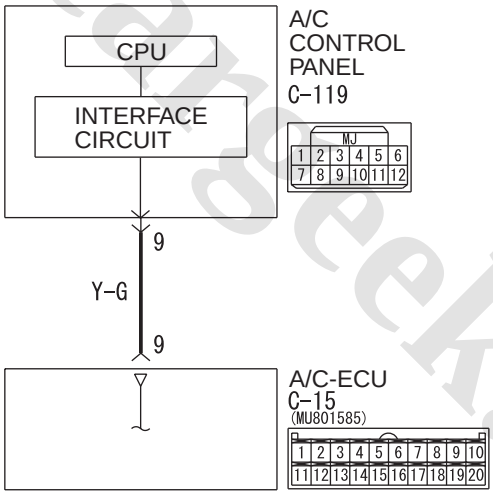

Wire colour code
B : Black LG : Light green G : Green L : Blue W : White Y : Yellow SB : Sky blue
BR : Brown O : Orange GR : Grey R : Red P : Pink V : Violet PU : Purple SI : Silver

ACA00799
W8G55X003A

www.cargeek.ir

www.CarGeek.ir

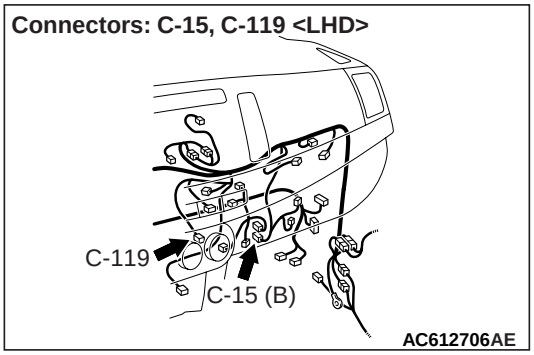

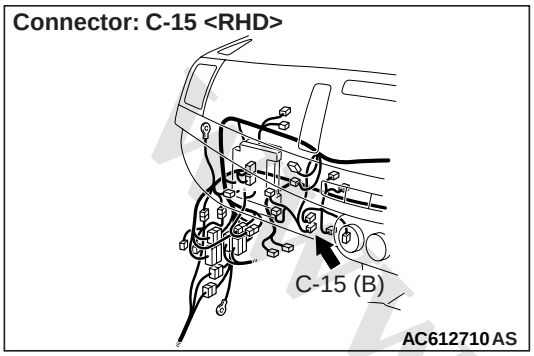

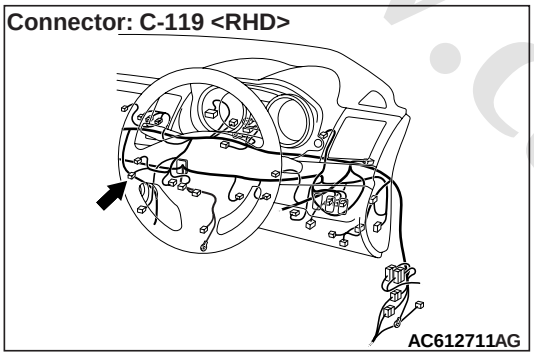

COMMENTS ON TROUBLE SYMPTOM
This code will be set when the air volume control dial position on the AC control panel is detected as abnormal.

PROBABLE CAUSES
- Malfunction of the A/C control panel
- Damaged wiring harness or connectors
- Malfunction of the A/C-ECU

DIAGNOSIS PROCEDURE

STEP 1. Connector check: C-119 A/C control panel connector and C-15 A/C-ECU connector

Q: Is the check result normal?
YES : Go to Step 2.
NO : Repair the connector.

STEP 2. Check the wiring harness between C-119 A/C control panel connector terminal No. 9 and C-15 A/C-ECU connector terminal No. 9.
- Check the A/C control panel signal line for open or short circuit.

Q: Is the check result normal?
YES : Go to Step 3.
NO : Repair the wiring harness.

STEP 3. Check whether the diagnosis code is reset
Replace the A/C control panel, and erase the diagnosis code. Then check that no diagnosis code is being set.

Q: Is the diagnosis code set?
YES : Replace the A/C-ECU.
NO : This diagnosis is complete.

Code No. B1079: A/C Refrigerant leaks

COMMENTS ON TROUBLE SYMPTOM
If this code is set, the refrigerant level may not be appropriate, or the A/C pressure sensor may be faulty (If this code is set, the A/C indicator will flash).

PROBABLE CAUSES
- Inadequate refrigerant level
- Malfunction of the A/C pressure sensor
- Malfunction of the ambient temperature sensor
- Damaged wiring harness or connectors
- Malfunction of the A/C-ECU

DIAGNOSIS PROCEDURE

STEP 1. Check the condenser assembly
Check that the condenser assembly is not wet.

Q: Is the check result normal?
YES : Go to Step 2.
NO : Wait until the condenser is dry, and check that no diagnosis code is set.

www.cargeek.ir

www.CarGeek.ir

STEP 2. M.U.T.-III CAN bus diagnostics
Use the M.U.T.-III to diagnose the CAN bus lines.

Q: Is the check result normal?
YES : Go to Step 3.
NO : Repair the CAN bus lines. (Refer to GROUP 54C, Troubleshooting).

STEP 3. M.U.T.-III diagnosis code
Check that the diagnosis code related to the A/C is not set.

Q: Is the diagnosis code set?
YES : Carry out the diagnosis code procedures. Refer to .
NO : Go to Step 4.

STEP 4. M.U.T.-III data list
Check that the following service data display contents are normal. (Refer to)
- Item 02: Ambient temperature sensor

Q: Is the check result normal?
YES : Go to Step 5.
NO : Refer to code No.B1011, B1012: Ambient temperature sensor system .

STEP 5. Check the A/C pressure sensor
Refer to .

Q: Is the check result normal?
YES : Go to Step 6.
NO : Replace the A/C pressure sensor.

STEP 6. Refrigerant level check
Refer to .

Q: Is the check result normal?
YES : Go to Step 7.
NO : Correct the refrigerant level.

STEP 7. Check whether the diagnosis code is reset

Q: Is the diagnosis code set?
YES : Refer to Inspection Procedure 11: A/C pressure sensor system .
NO : The trouble can be an intermittent malfunction (Refer to GROUP 00, How to Cope with Intermittent Malfunction).

Code No. B2214: Control panel failure <Vehicles without A/C>

Heater Control Panel Circuit

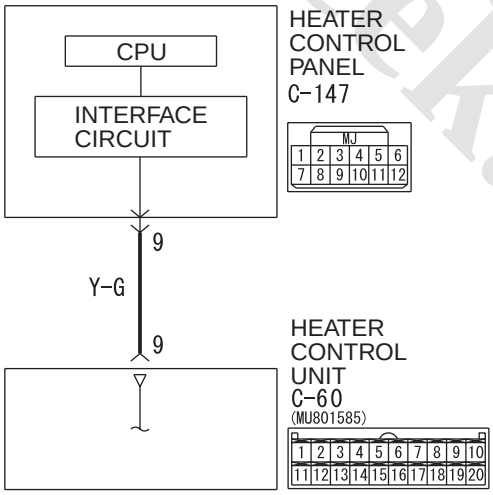

Wire colour code
B : Black LG : Light green G : Green L : Blue W : White Y : Yellow SB : Sky blue
BR : Brown O : Orange GR : Grey R : Red P : Pink V : Violet PU : Purple SI : Silver

ACA00851
W8G55X003A

www.cargeek.ir

www.CarGeek.ir

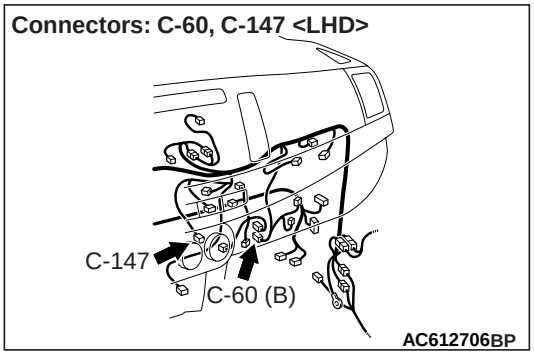

COMMENTS ON TROUBLE SYMPTOM
This code will be set when the A/C control panel is faulty.

PROBABLE CAUSES
- Malfunction of the heater control panel
- Damaged wiring harness or connectors
- Malfunction of the heater control unit

DIAGNOSIS PROCEDURE

STEP 1. Connector check: C-147 heater control panel connector and C-60 heater control unit connector

Q: Is the check result normal?
YES : Go to Step 2.
NO : Repair the connector.

STEP 2. Check the wiring harness between C-147 heater control panel connector terminal No. 9 and C-60 heater control unit connector terminal No. 9.
- Check the heater control panel signal line for open or short circuit.

Q: Is the check result normal?
YES : Go to Step 3.
NO : Repair the wiring harness.

STEP 3. Check whether the diagnosis code is reset.
Replace the heater control panel, and erase the diagnosis code. Then check that no diagnosis code is being set.

Q: Is the diagnosis code set?
YES : Replace the heater control unit.
NO : The trouble can be an intermittent malfunction (Refer to GROUP 00, How to Cope with Intermittent Malfunction).

Code No. B2214: Control panel failure <Vehicles with A/C>

A/C Control Panel Circuit

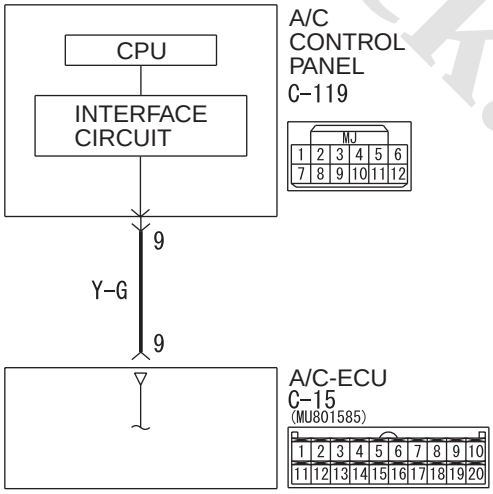

Wire colour code
B : Black LG : Light green G : Green L : Blue W : White Y : Yellow SB : Sky blue
BR : Brown O : Orange GR : Grey R : Red P : Pink V : Violet PU : Purple SI : Silver

ACA00799
W8G55X003A

www.cargeek.ir

www.CarGeek.ir

Connectors: C-15, C-119 <LHD>

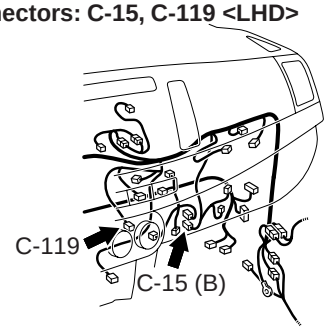

AC612706AE

Connector: C-15 <RHD>

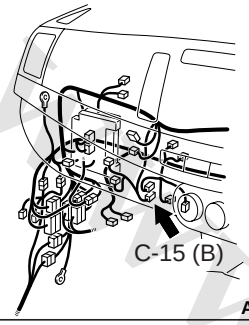

AC612710AS

Connector: C-119 <RHD>

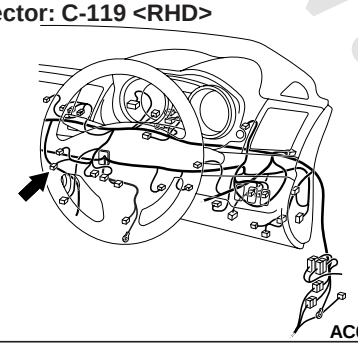

AC612711AG

COMMENTS ON TROUBLE SYMPTOM
This code will be set when the A/C control panel is faulty.

PROBABLE CAUSES
- Malfunction of the A/C control panel
- Damaged wiring harness or connectors
- Malfunction of the A/C-ECU

DIAGNOSIS PROCEDURE

STEP 1. Connector check: C-119 A/C control panel connector and C-15 A/C-ECU connector

Q: Is the check result normal?
YES : Go to Step 2.
NO : Repair the connector.

STEP 2. Check the wiring harness between C-119 A/C control panel connector terminal No. 9 and C-15 A/C-ECU connector terminal No. 9.
- Check the A/C control panel signal line for open or short circuit.

Q: Is the check result normal?
YES : Go to Step 3.
NO : Repair the wiring harness.

STEP 3. Check whether the diagnosis code is reset
Replace the A/C control panel, and erase the diagnosis code. Then check that no diagnosis code is being set.

Q: Is the diagnosis code set?
YES : Replace the A/C-ECU.
NO : This diagnosis is complete.

Code No.U1415: Coding Not Completed

⚠ CAUTION
If diagnosis code No. U1415 is set in the A/C-ECU, always diagnose the CAN bus lines.

⚠ CAUTION
Before replacing the ECU, ensure that the communication circuit is normal.

TROUBLE JUDGMENT
The A/C-ECU receives vehicle information-related signals from the ETACS-ECU via the CAN bus lines. If the ECU receives an incorrect global coding data or cannot receive any coding data when the ignition switch is turned on and the coding is complete, diagnosis code U1415 will be set.

PROBABLE CAUSES
- Damaged wiring harness or connectors
- Malfunction of the ETACS-ECU
- Malfunction of the A/C-ECU

DIAGNOSIS PROCEDURE

STEP 1. M.U.T.-III CAN bus diagnostics
Use the M.U.T.-III to diagnose the CAN bus lines.

Q: Is the check result normal?
YES : Go to Step 2
NO : Repair the CAN bus lines. (Refer to GROUP 54C – Troubleshooting). On completion, go to Step 6.

www.cargeek.ir

www.CarGeek.ir

STEP 2. M.U.T.-III other system diagnosis code
Check whether the ETACS-related diagnosis code is set.

Q: Is the diagnosis code set?
YES : Diagnose the ETACS-ECU. Refer to
NO : Go to Step 3

STEP 3. M.U.T.-III other system diagnosis code
Check if a diagnosis code, which relates to the CAN communication-linked systems below, is set.
- WCM <Vehicles with WCM>

B2204: Coding data unmatched
- KOS <Vehicles with KOS>

B2204: Coding data unmatched

Q: Is the diagnosis code set?
YES : Go to Step 4
NO : Go to Step 5

STEP 4. Check whether the diagnosis code is reset.
Recheck if the diagnosis code is set.
(1) Erase the diagnosis code.
(2) Ignition switch: LOCK (OFF) to ON
(3) Check if the diagnosis code is set.

Q: Is the diagnosis code set?
YES : Replace the ETACS-ECU, and then go to Step 6.
NO : A poor connection, open circuit or other intermittent malfunction in the CAN bus line between the ETACS-ECU and the A/C-ECU (Refer to GROUP 00 – How to Cope with Intermittent Malfunction).

STEP 5. Check whether the diagnosis code is reset.
Recheck if the diagnosis code is set.
(1) Erase the diagnosis code.
(2) Ignition switch: LOCK (OFF) to ON
(3) Check if the diagnosis code is set.

Q: Is the diagnosis code set?
YES : Replace the A/C-ECU, and then go to Step 6.
NO : A poor connection, open circuit or other intermittent malfunction in the CAN bus line between the ETACS-ECU and the A/C-ECU (Refer to GROUP 00 – How to Cope with Intermittent Malfunction).

STEP 6. Check whether the diagnosis code is reset.
Recheck if the diagnosis code is set.
(1) Erase the diagnosis code.
(2) Ignition switch: LOCK (OFF) to ON
(3) Check if the diagnosis code is set.

Q: Is the diagnosis code set?
YES : Return to Step 1.
NO : The procedure is complete.

Code No. U0019: Bus off (CAN-B)

⚠ CAUTION
If diagnosis code No.U0019 is set in the A/C-ECU, diagnose the CAN main bus line.

⚠ CAUTION
Whenever the ECU is replaced, ensure that the communication circuit is normal.

TROUBLE JUDGMENT
If the A/C-ECU ceases communicating once (i.e. bus off) and then returns to it, the A/C-ECU will not communicate for three minutes immediately after that point. This three-minute period is called "Penalty mode." Immediately after the A/C-ECU returns to communication, the diagnosis code is set.

COMMENTS ON TROUBLE SYMPTOM
The wiring harness wire or connectors may have loose, corroded, or damage terminals, or terminals pushed back in the connector, or the A/C-ECU may be defective.

PROBABLE CAUSES
- Damaged wiring harness or connectors
- Malfunction of the A/C-ECU

DIAGNOSIS PROCEDURE

STEP 1. M.U.T.-III CAN bus diagnostics
Use the M.U.T.-III to diagnose the CAN bus lines.

Q: Is the check result normal?

www.cargeek.ir

www.CarGeek.ir

YES : Go to Step 2
NO : Repair the CAN bus lines (Refer to GROUP 54C – Troubleshooting). On completion, go to Step 3.

STEP 2. M.U.T.-III diagnosis code.
Recheck if the diagnosis code is set.
(1) Erase the diagnosis code.
(2) Ignition switch: LOCK (OFF) to ON
(3) Check if the diagnosis code is set.

Q: Is the diagnosis code set?
YES : Replace the A/C-ECU, and then go to Step 3.
NO : If a trouble is solved, it is determined that there is an intermittent malfunction such as poor engaged connector(s) or open circuit (Refer to GROUP 00, How to Cope with Intermittent Malfunction).

STEP 3. M.U.T.-III diagnosis code
Recheck if the diagnosis code is set.
(1) Erase the diagnosis code.
(2) Ignition switch: LOCK (OFF) to ON
(3) Check if the diagnosis code is set.

Q: Is the diagnosis code set?
YES : Return to Step 1.
NO : The procedure is complete.

Code No. U0141: ETACS-ECU CAN time-out

⚠ CAUTION
If diagnosis code No.U0141 is set in the A/C-ECU, diagnose the CAN main bus line.

⚠ CAUTION
Whenever the ECU is replaced, ensure that the communication circuit is normal.

TROUBLE JUDGMENT
The A/C-ECU receives air conditioner operation-related signal from the ETACS-ECU via the CAN bus lines. If the A/C-ECU can not receive the air conditioner operation-related signal at all on the ETACS-ECU, diagnosis code No.U0141 will be set.

COMMENTS ON TROUBLE SYMPTOM

Current trouble
- Connector(s) or wiring harness in the CAN bus lines between the ETACS-ECU and the A/C-ECU, the power supply system to the ETACS-ECU, the ETACS-ECU itself, or the A/C-ECU may be faulty.

Past trouble
- Carry out diagnosis with particular emphasis on connector(s) or wiring harness in the CAN bus lines between the ETACS-ECU and the A/C-ECU, and the power supply system to the ETACS-ECU. For diagnosis procedures, refer to "How to treat past trouble" (Refer to GROUP 00 – How to Treat Past Trouble).

NOTE: For a past trouble, you can not find it by the M.U.T.-III CAN bus diagnostics even if there is any failure in CAN bus lines. In this case, refer to GROUP 00, How to Cope with Intermittent Malfunction and check the CAN bus lines. You can narrow down the possible cause of the trouble by referring to the diagnosis code, which is set regarding the CAN communication-linked ECUs (Refer to GROUP 54C – CAN Bus Line Diagnostic Flow).

⚠ CAUTION
If the ignition switch is turned on without starting the engine and then three minutes pass, the A/C-ECU may store U0141 as past trouble.

PROBABLE CAUSES
- Damaged wiring harness or connectors
- Malfunction of the ETACS-ECU
- Malfunction of the A/C-ECU

DIAGNOSIS PROCEDURE

STEP 1. M.U.T.-III CAN bus diagnostics
Use the M.U.T.-III to diagnose the CAN bus lines.

Q: Is the check result normal?
YES : Go to Step 2
NO : Repair the CAN bus lines (Refer to GROUP 54C, Troubleshooting). On completion, go to Step 6.

STEP 2. M.U.T.-III other system diagnosis code
Check whether the ETACS-related diagnosis code is set.

Q: Is the diagnosis code set?

www.cargeek.ir

www.CarGeek.ir

YES : Diagnose the ETACS-ECU. Refer to .
NO : Go to Step 3

STEP 3. M.U.T.-III other system diagnosis code
Check if a diagnosis code, which relates to CAN communication-linked systems below, is set.
- ETACS-ECU

U0141: ETACS-related time-out diagnosis code

Q: Is the diagnosis code set?
YES : Go to Step 4
NO : Go to Step 5

STEP 4. Check whether the diagnosis code is reset.
Recheck if the diagnosis code is set.
(1) Erase the diagnosis code.
(2) Ignition switch: LOCK (OFF) to ON
(3) Check if the diagnosis code is set.

Q: Is the diagnosis code set?
YES : Replace the ETACS-ECU, and then go to Step 6.
NO : A poor connection, open circuit or other intermittent malfunction in the CAN bus line between the ETACS-ECU and the A/C-ECU (Refer to GROUP 00 – How to Cope with Intermittent Malfunction).

STEP 5. Check whether the diagnosis code is reset.
Recheck if the diagnosis code is set.
(1) Erase the diagnosis code.
(2) Ignition switch: LOCK (OFF) to ON
(3) Check if the diagnosis code is set.

Q: Is the diagnosis code set?
YES : Replace the A/C-ECU, and then go to Step 6.
NO : A poor connection, open circuit or other intermittent malfunction in the CAN bus line between the ETACS-ECU and the A/C-ECU (Refer to GROUP 00 – How to Cope with Intermittent Malfunction).

STEP 6. Check whether the diagnosis code is reset.
Recheck if the diagnosis code is set.
(1) Erase the diagnosis code.
(2) Ignition switch: LOCK (OFF) to ON
(3) Check if the diagnosis code is set.

Q: Is the diagnosis code set?
YES : Return to Step 1.
NO : The procedure is complete.

Code No. U0151: SRS CAN time-out

⚠ CAUTION
If diagnosis code No.U0151 is set in the A/C-ECU, diagnose the CAN main bus line.

⚠ CAUTION
Whenever the ECU is replaced, ensure that the communication circuit is normal.

TROUBLE JUDGMENT
The A/C-ECU receives air conditioner control-related signals from the SRS-ECU via the CAN bus lines. If the ECU cannot receive any of the air conditioner control-related signals from the SRS-ECU, diagnosis code U0151 will be stored.

COMMENTS ON TROUBLE SYMPTOM

Current trouble
- Connector(s) or wiring harness in the CAN bus lines between the SRS-ECU and the A/C-ECU, the power supply system to the SRS-ECU, the SRS-ECU itself, or the A/C-ECU may be defective.

Past trouble
- Carry out diagnosis with particular emphasis on connector(s) or wiring harness in the CAN bus lines between the SRS-ECU and the A/C-ECU, and the power supply system to the SRS-ECU. For diagnosis procedures, refer to "How to treat past trouble" (Refer to GROUP 00 – How to Treat Past Trouble).

NOTE: For a past trouble, you can not find it by the M.U.T.-III CAN bus diagnostics even if there is any failure in CAN bus lines. In this case, refer to GROUP 00, How to Cope with Intermittent Malfunction and check the CAN bus lines. You can narrow down the possible cause of the trouble by referring to the diagnosis code, which is set regarding the CAN communication-linked ECUs (Refer to GROUP 54C – CAN Bus Line Diagnostic Flow).

www.cargeek.ir

www.CarGeek.ir

⚠ CAUTION
If the ignition switch is turned to the ON position without starting the engine, the diagnosis code U0151 (past trouble) may be set to the A/C-ECU after three minutes.

PROBABLE CAUSES
- Damaged wiring harness or connectors
- Malfunction of the SRS-ECU
- Malfunction of the A/C-ECU

DIAGNOSIS PROCEDURE

STEP 1. M.U.T.-III CAN bus diagnostics
Use the M.U.T.-III to diagnose the CAN bus lines.

Q: Is the check result normal?
YES : Go to Step 2
NO : Repair the CAN bus lines. (Refer to GROUP 54C, Troubleshooting) On completion, go to Step 6.

STEP 2. M.U.T.-III other system diagnosis code
Check whether the SRS-related diagnosis code is set.

Q: Is the diagnosis code set?
YES : Diagnose the SRS-ECU. Refer to .
NO : Go to Step 3.

STEP 3. M.U.T.-III other system diagnosis code
Check if a diagnosis code, which relates to CAN communication-linked systems below, is set.
- SRS-ECU

U0151: SRS-ECU-related time-out diagnosis code

Q: Is the diagnosis code set?
YES : Go to Step 4.
NO : Go to Step 5.

STEP 4. Check whether the diagnosis code is reset.
Recheck if the diagnosis code is set.
(1) Erase the diagnosis code.
(2) Ignition switch: LOCK (OFF) to ON
(3) Check if the diagnosis code is set.

Q: Is the diagnosis code set?
YES : Replace the SRS-ECU, and then go to Step 6.
NO : A poor connection, open circuit or other intermittent malfunction in the CAN bus line between the SRS-ECU and the A/C-ECU (Refer to GROUP 00 – How to Cope with Intermittent Malfunction).

STEP 5. Check whether the diagnosis code is reset.
Recheck if the diagnosis code is set.
(1) Erase the diagnosis code.
(2) Ignition switch: LOCK (OFF) to ON
(3) Check if the diagnosis code is set.

Q: Is the diagnosis code set?
YES : Replace the A/C-ECU, and then go to Step 6.
NO : A poor connection, open circuit or other intermittent malfunction in the CAN bus line between the SRS-ECU and the A/C-ECU (Refer to GROUP 00 – How to Cope with Intermittent Malfunction).

STEP 6. Check whether the diagnosis code is reset.
Recheck if the diagnosis code is set.
(1) Erase the diagnosis code.
(2) Ignition switch: LOCK (OFF) to ON
(3) Check if the diagnosis code is set.

Q: Is the diagnosis code set?
YES : Return to Step 1.
NO : The procedure is complete.

Code No. U0155: Meter CAN time-out

⚠ CAUTION
If diagnosis code No.U0155 is set in the A/C-ECU, diagnose the CAN main bus line.

⚠ CAUTION
Whenever the ECU is replaced, ensure that the communication circuit is normal.

TROUBLE JUDGMENT
The A/C-ECU receives air conditioner control-related signals from the combination meter via the CAN bus lines. If the ECU cannot receive any of the air conditioner control-related signals from the combination meter, diagnosis code U0155 will be stored.

www.cargeek.ir

www.CarGeek.ir

COMMENTS ON TROUBLE SYMPTOM

Current trouble

- Connector(s) or wiring harness in the CAN bus lines between the combination meter and the A/C-ECU, the power supply system to the combination meter, the combination meter itself, or the A/C-ECU may be faulty.

Past trouble

- Carry out diagnosis with particular emphasis on connector(s) or wiring harness in the CAN bus lines between the A/C-ECU and the combination meter, and the power supply system to the combination meter. For diagnosis procedures, refer to "How to treat past trouble" (Refer to GROUP 00 – How to Treat Past Trouble).

NOTE: For a past trouble, you can not find it by the M.U.T.-III CAN bus diagnostics even if there is any failure in CAN bus lines. In this case, refer to GROUP 00, How to Cope with Intermittent Malfunction and check the CAN bus lines. You can narrow down the possible cause of the trouble by referring to the diagnosis code, which is set regarding the CAN communication-linked ECUs (Refer to GROUP 54C – CAN Bus Line Diagnostic Flow).

⚠ CAUTION

If the ignition switch is turned to the ON position without starting the engine, the diagnosis code U0168 (past trouble) may be set to the A/C-ECU after three minutes.

PROBABLE CAUSES

- Damaged wiring harness or connectors
- Malfunction of the combination meter
- Malfunction of the A/C-ECU

DIAGNOSIS PROCEDURE

STEP 1. M.U.T.-III CAN bus diagnostics

Use the M.U.T.-III to diagnose the CAN bus lines.

Q: Is the check result normal?

YES : Go to Step 2

NO : Repair the CAN bus lines (Refer to GROUP 54C, Troubleshooting). On completion, go to Step 6.

STEP 2. M.U.T.-III other system diagnosis code

Check whether the combination meter-related diagnosis code is set.

Q: Is the diagnosis code set?

YES : Diagnose the combination meter. Refer to .

NO : Go to Step 3

STEP 3. M.U.T.-III other system diagnosis code

Check if a diagnosis code, which relates to CAN communication-linked systems below, is set.

- Combination meter

U0155: Combination meter-related time-out diagnosis code

Q: Is the diagnosis code set?

YES : Go to Step 4.

NO : Go to Step 5.

STEP 4. Check whether the diagnosis code is reset.

Recheck if the diagnosis code is set.

(1) Erase the diagnosis code.
(2) Ignition switch: LOCK (OFF) to ON
(3) Check if the diagnosis code is set.

Q: Is the diagnosis code set?

YES : Replace the combination meter, and then go to Step 6.

NO : A poor connection, open circuit or other intermittent malfunction in the CAN bus line between the combination meter and the A/C-ECU (Refer to GROUP 00 – How to Cope with Intermittent Malfunction).

STEP 5. Check whether the diagnosis code is reset.

Recheck if the diagnosis code is set.

(1) Erase the diagnosis code.
(2) Ignition switch: LOCK (OFF) to ON
(3) Check if the diagnosis code is set.

Q: Is the diagnosis code set?

YES : Replace the A/C-ECU, and then go to Step 6.

NO : A poor connection, open circuit or other intermittent malfunction in the CAN bus line between the combination meter and the A/C-ECU (Refer to GROUP 00 – How to Cope with Intermittent Malfunction).

STEP 6. Check whether the diagnosis code is reset.

Recheck if the diagnosis code is set.

(1) Erase the diagnosis code.
(2) Ignition switch: LOCK (OFF) to ON
(3) Check if the diagnosis code is set.

Q: Is the diagnosis code set?

www.cargeek.ir

www.CarGeek.ir

YES : Return to Step 1.
NO : The procedure is complete.

Code No. U0168: WCM CAN time-out

⚠ CAUTION
If diagnosis code No.U0168 is set in the A/C-ECU, diagnose the CAN main bus line.

⚠ CAUTION
Whenever the ECU is replaced, ensure that the communication circuit is normal.

TROUBLE JUDGMENT

The A/C-ECU receives air conditioner control-related signals from the WCM via the CAN bus lines. If the ECU cannot receive any of the air conditioner control-related signals from the WCM, diagnosis code U0168 will be stored.

COMMENTS ON TROUBLE SYMPTOM

Current trouble

- Connector(s) or wiring harness in the CAN bus lines between the WCM and the A/C-ECU, the power supply system to the WCM, the WCM itself, or the A/C-ECU may be faulty.

Past trouble

- Carry out diagnosis with particular emphasis on connector(s) or wiring harness in the CAN bus lines between the A/C-ECU and the WCM, and the power supply system to the WCM. For diagnosis procedures, refer to "How to treat past trouble" (Refer to GROUP 00 – How to Treat Past Trouble).?

NOTE: For a past trouble, you can not find it by the M.U.T.-III CAN bus diagnostics even if there is any failure in CAN bus lines. In this case, refer to GROUP 00, How to Cope with Intermittent Malfunction and check the CAN bus lines. You can narrow down the possible cause of the trouble by referring to the diagnosis code, which is set regarding the CAN communication-linked ECUs (Refer to GROUP 54C – CAN Bus Line Diagnostic Flow).

⚠ CAUTION
If the ignition switch is turned to the ON position without starting the engine, the diagnosis code U0168 (past trouble) may be set to the A/C-ECU after three minutes.

PROBABLE CAUSES

- Damaged wiring harness or connectors
- Malfunction of the WCM
- Malfunction of the A/C-ECU

DIAGNOSIS PROCEDURE

STEP 1. M.U.T.-III CAN bus diagnostics
Use the M.U.T.-III to diagnose the CAN bus lines.

Q: Is the check result normal?
YES : Go to Step 2.
NO : Repair the CAN bus lines (Refer to GROUP 54C Troubleshooting). On completion, go to Step 6.

STEP 2. M.U.T.-III other system diagnosis code
Check whether the WCM-related diagnosis code is set.

Q: Is the diagnosis code set?
YES : Diagnose the WCM. Refer to .
NO : Go to Step 3.

STEP 3. M.U.T.-III other system diagnosis code
Check if a diagnosis code, which relates to CAN communication-linked systems below, is set.

- WCM

U0168: WCM-related time-out diagnosis code

Q: Is the diagnosis code set?
YES : Go to Step 4.
NO : Go to Step 5.

STEP 4. Check whether the diagnosis code is reset.
Recheck if the diagnosis code is set.
(1) Erase the diagnosis code.
(2) Ignition switch: LOCK (OFF) to ON
(3) Check if the diagnosis code is set.

Q: Is the diagnosis code set?
YES : Replace the WCM, and then go to Step 6.
NO : A poor connection, open circuit or other intermittent malfunction in the CAN bus line between the WCM and the A/C-ECU (Refer to GROUP 00 – How to Cope with Intermittent Malfunction).

www.cargeek.ir

www.CarGeek.ir

STEP 5. Check whether the diagnosis code is reset.

Recheck if the diagnosis code is set.
(1) Erase the diagnosis code.
(2) Ignition switch: LOCK (OFF) to ON
(3) Check if the diagnosis code is set.

Q: Is the diagnosis code set?
YES : Replace the A/C-ECU, and then go to Step 6.
NO : A poor connection, open circuit or other intermittent malfunction in the CAN bus line between the WCM and the A/C-ECU (Refer to GROUP 00 – How to Cope with Intermittent Malfunction).

STEP 6. Check whether the diagnosis code is reset.

Recheck if the diagnosis code is set.
(1) Erase the diagnosis code.
(2) Ignition switch: LOCK (OFF) to ON
(3) Check if the diagnosis code is set.

Q: Is the diagnosis code set?
YES : Return to Step 1.
NO : The procedure is complete.

Code No. U0184: Audio CAN time-out

⚠ CAUTION
If diagnosis code No.U0184 is set in the A/C-ECU, diagnose the CAN main bus line.

⚠ CAUTION
Whenever the ECU is replaced, ensure that the communication circuit is normal.

TROUBLE JUDGMENT

The A/C-ECU receives air conditioner control-related signals from the audio system via the CAN bus lines. If the ECU cannot receive any of the air conditioner control-related signals from the audio system, diagnosis code U0184 will be stored.

COMMENTS ON TROUBLE SYMPTOM

Current trouble

- Connector(s) or wiring harness in the CAN bus lines between the audio system and the A/C-ECU, the power supply system to the audio system, the audio system itself, or the A/C-ECU may be defective.

Past trouble

- Carry out diagnosis with particular emphasis on connector(s) or wiring harness in the CAN bus lines between the A/C-ECU and the audio system, and the power supply system to the audio system. For diagnosis procedures, refer to "How to treat past trouble" (Refer to GROUP 00 – How to Treat Past Trouble).

NOTE: For a past trouble, you can not find it by the M.U.T.-III CAN bus diagnostics even if there is any failure in CAN bus lines. In this case, refer to GROUP 00, How to Cope with Intermittent Malfunction and check the CAN bus lines. You can narrow down the possible cause of the trouble by referring to the diagnosis code, which is set regarding the CAN communication-linked ECUs (Refer to GROUP 54C – CAN Bus Line Diagnostic Flow).

⚠ CAUTION
If the ignition switch is turned to the ON position without starting the engine, the diagnosis code U0184 (past trouble) may be set to the A/C-ECU after three minutes.

PROBABLE CAUSES

- Damaged wiring harness or connectors
- Malfunction of the audio
- Malfunction of the A/C-ECU

DIAGNOSIS PROCEDURE

STEP 1. M.U.T.-III CAN bus diagnostics

Use the M.U.T.-III to diagnose the CAN bus lines.

Q: Is the check result normal?
YES : Go to Step 2.
NO : Repair the CAN bus lines (Refer to GROUP 54C, Troubleshooting). On completion, go to Step 6.

STEP 2. M.U.T.-III other system diagnosis code

Check whether the audio-related diagnosis code is set.

Q: Is the diagnosis code set?
YES : Diagnose the audio. Refer to .
NO : Go to Step 3

www.cargeek.ir

www.CarGeek.ir

STEP 3. M.U.T.-III other system diagnosis code
Check if a diagnosis code, which relates to CAN communication-linked systems below, is set.
- Audio

U0184: Audio-related time-out diagnosis code

Q: Is the diagnosis code set?
YES : Go to Step 4
NO : Go to Step 5

STEP 4. Check whether the diagnosis code is reset.
Recheck if the diagnosis code is set.
(1) Erase the diagnosis code.
(2) Ignition switch: LOCK (OFF) to ON
(3) Check if the diagnosis code is set.

Q: Is the diagnosis code set?
YES : Replace the audio, and then go to Step 6.
NO : A poor connection, open circuit or other intermittent malfunction in the CAN bus line between the audio and the A/C-ECU (Refer to GROUP 00 – How to Cope with Intermittent Malfunction).

STEP 5. Check whether the diagnosis code is reset.
Recheck if the diagnosis code is set.
(1) Erase the diagnosis code.
(2) Ignition switch: LOCK (OFF) to ON
(3) Check if the diagnosis code is set.

Q: Is the diagnosis code set?
YES : Replace the A/C-ECU, and then go to Step 6.
NO : A poor connection, open circuit or other intermittent malfunction in the CAN bus line between the audio and the A/C-ECU (Refer to GROUP 00 – How to Cope with Intermittent Malfunction).

STEP 6. Check whether the diagnosis code is reset.
Recheck if the diagnosis code is set.
(1) Erase the diagnosis code.
(2) Ignition switch: LOCK (OFF) to ON
(3) Check if the diagnosis code is set.

Q: Is the diagnosis code set?
YES : Return to Step 1.
NO : The procedure is complete.

TROUBLE SYMPTOM CHART <VEHICLES WITHOUT A/C>

M1554005001518

Trouble symptom	Inspection procedure No.	Reference page
Communication with the M.U.T.-III is not possible	1	
The blower does not work	2	
The blower air volume cannot be changed	3	
The inside/outside air changeover is impossible	4	
Outlet air temperature cannot be set	5	
Air outlets changeover is impossible	6	
Blower motor power supply system	7	
Heater control unit power supply system	8	
The buzzer does not sound	9	(Refer to GROUP 54A – Combination Meter).

www.cargeek.ir

www.CarGeek.ir

SYMPTOM PROCEDURES <Vehicles without A/C>

INSPECTION PROCEDURE 1: Communication with the M.U.T.-III is not possible.

COMMENTS ON TROUBLE SYMPTOM
If communication with all other systems is not possible, there is a high possibility that there is a malfunction of the diagnosis line. If only the heater control unit system can not communicate with the M.U.T.-III, the heater control unit may be defective.

PROBABLE CAUSE
Malfunction of the heater control unit

DIAGNOSIS PROCEDURE

STEP 1. M.U.T.-III CAN bus diagnostics
Use the M.U.T.-III to diagnose the CAN bus lines.

Q: Is the check result normal?
- **YES :** Check and repair the power supply circuit system.
- **NO :** Repair the CAN bus line (Refer to GROUP 54C, Troubleshooting).

www.cargeek.ir
www.cargeek.ir

www.CarGeek.ir

INSPECTION PROCEDURE 2: The blower does not work

Blower Motor Circuit

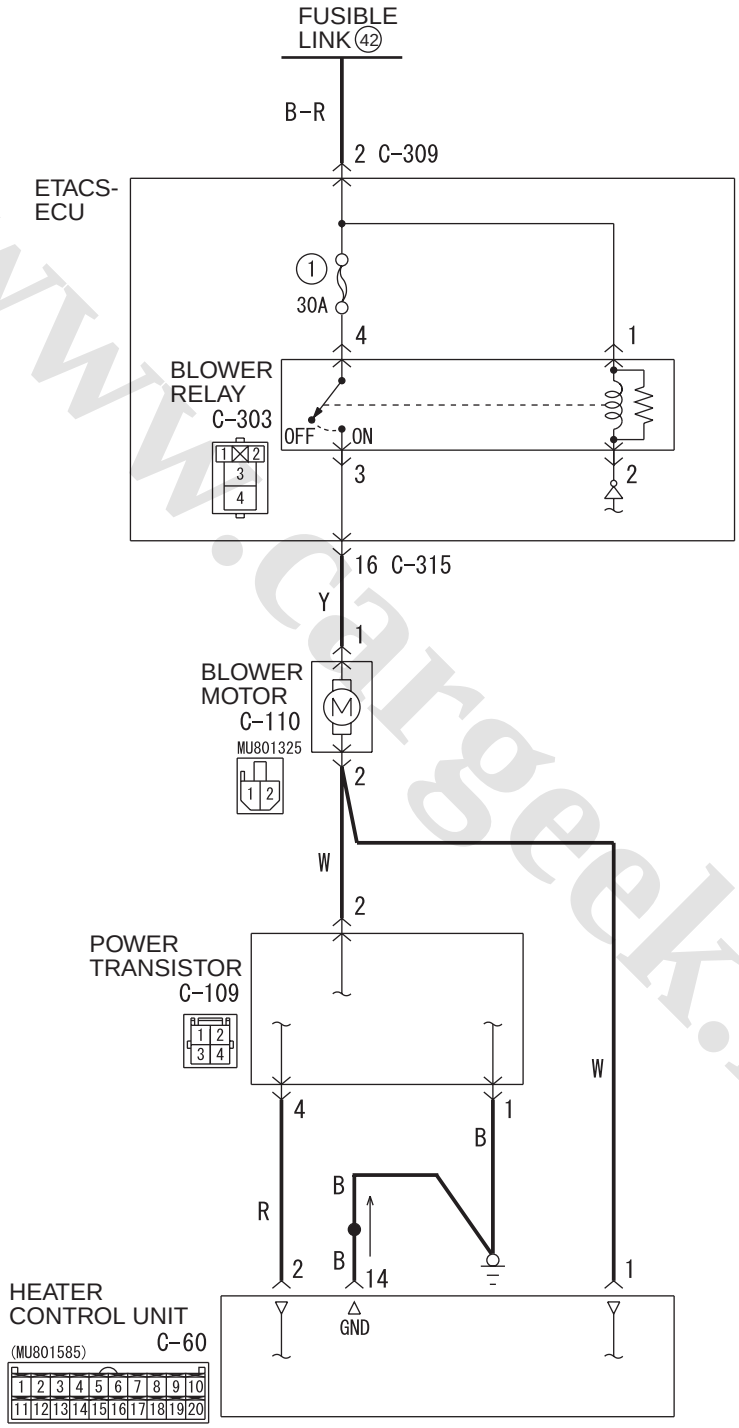

Wire colour code
B : Black LG : Light green G : Green L : Blue W : White Y : Yellow SB : Sky blue
BR : Brown O : Orange GR : Grey R : Red P : Pink V : Violet PU : Purple SI : Silver

ACB02708
W8G55X008A

www.cargeek.ir

www.CarGeek.ir

Connectors: C-60, C-109, C-110 <LHD>

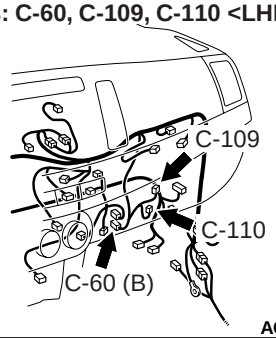

Connector: C-303<LHD>
ETACS-ECU

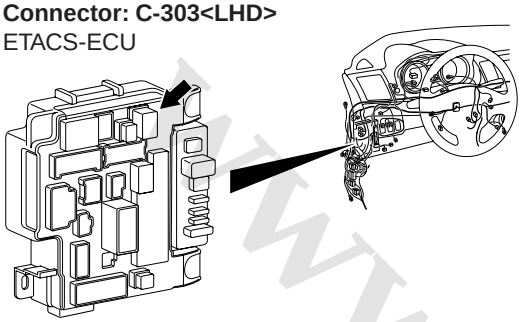

COMMENTS ON TROUBLE SYMPTOM

If the blower motor does not operate, the blower motor circuit system may be defective.

PROBABLE CAUSES

- Malfunction of the blower motor
- Malfunction of the power transistor
- Malfunction of the heater control unit
- Damaged wiring harness or connectors

DIAGNOSIS PROCEDURE

STEP 1. M.U.T.-III CAN bus diagnostics

Use the M.U.T.-III to diagnose the CAN bus lines.

Q: Is the check result normal?
YES : Go to Step 2.
NO : Repair the CAN bus lines (Refer to GROUP 54C – Troubleshooting).

STEP 2. M.U.T.-III diagnosis code.

Recheck if the diagnosis code is set.
(1) Erase the diagnosis code.
(2) Ignition switch: LOCK (OFF) to ON
(3) Check if the diagnosis code is set.

Q: Is the diagnosis code set?
YES : Carry out the diagnosis code procedures. Refer to .
NO : Go to Step 3.

STEP 3. Connector check: C-303 blower relay connector

Q: Is the check result normal?
YES : Go to Step 4.
NO : Repair the connector.

STEP 4. Check the blower relay.

Refer to .

Q: Is the blower relay in good condition?
YES : Go to Step 5.
NO : Replace the blower relay.

STEP 5. Connector check: C-110 blower motor connector

Q: Is the check result normal?
YES : Go to Step 6.
NO : Repair the connector.

STEP 6. Check the blower motor.

Refer to .

Q: Is the check result normal?
YES : Go to Step 7.
NO : Replace the blower motor.

STEP 7. Voltage measurement at C-110 blower motor connector.

(1) Disconnect the connector, and measure at the wiring harness side.
(2) Turn the ignition switch to the ON position.
(3) Voltage between terminal 1 and body earth. <LHD>

OK: System voltage

(4) Voltage between terminal 2 and body earth. <RHD>

OK: System voltage

Q: Is the check result normal?
YES : Go to Step 8.
NO : INSPECTION PROCEDURE 7: Refer to "Blower motor power supply system" .

STEP 8. Connector check: C-109 power transistor controller connector

Q: Is the check result normal?
YES : Go to Step 9.
NO : Repair the connector.

STEP 9. Resistance measurement at the C-109 power transistor connector.

(1) Disconnect the connector, and measure at the

www.cargeek.ir

www.CarGeek.ir

wiring harness side.

(2) Continuity between terminal 1 and body earth

OK: Continuity exists (2 Ω or less)

Q: Is the check result normal?

YES : Go to Step 10.

NO : Repair the wiring harness wires between power transistor connector terminal No. 1 and body earth.

STEP 10. Check the wiring harness between C-110 blower motor connector terminal No.2 and C-109 power transistor connector terminal No.2.

- Check the power transistor power supply line for open circuit.

Q: Is the check result normal?

YES : Go to Step 11.

NO : Repair the wiring harness.

STEP 11. Connector check: C-60 heater control unit connector

Q: Is the check result normal?

YES : Go to Step 12.

NO : Repair the connector.

STEP 12. Check the wiring harness between C-110 blower motor connector terminal No.2 and C-60 heater control unit connector terminal No.1.

- Check the blower motor power supply line for open circuit.

Q: Is the check result normal?

YES : Go to Step 13.

NO : Repair the wiring harness.

STEP 13. Check the wiring harness between C-109 power transistor connector terminal No.4 and C-60 heater control unit connector terminal No.2.

- Check the power transistor power supply line for open circuit.

Q: Is the check result normal?

YES : Go to Step 14.

NO : Repair the wiring harness.

STEP 14. Replace the power transistor and recheck the trouble symptom

Check that the blower motor operates normally.

Q: Is the check result normal?

YES : This diagnosis is complete.

NO : Replace the heater control unit.

www.cargeek.ir

www.CarGeek.ir

INSPECTION PROCEDURE 3: The blower air volume cannot be changed

Blower Motor Circuit

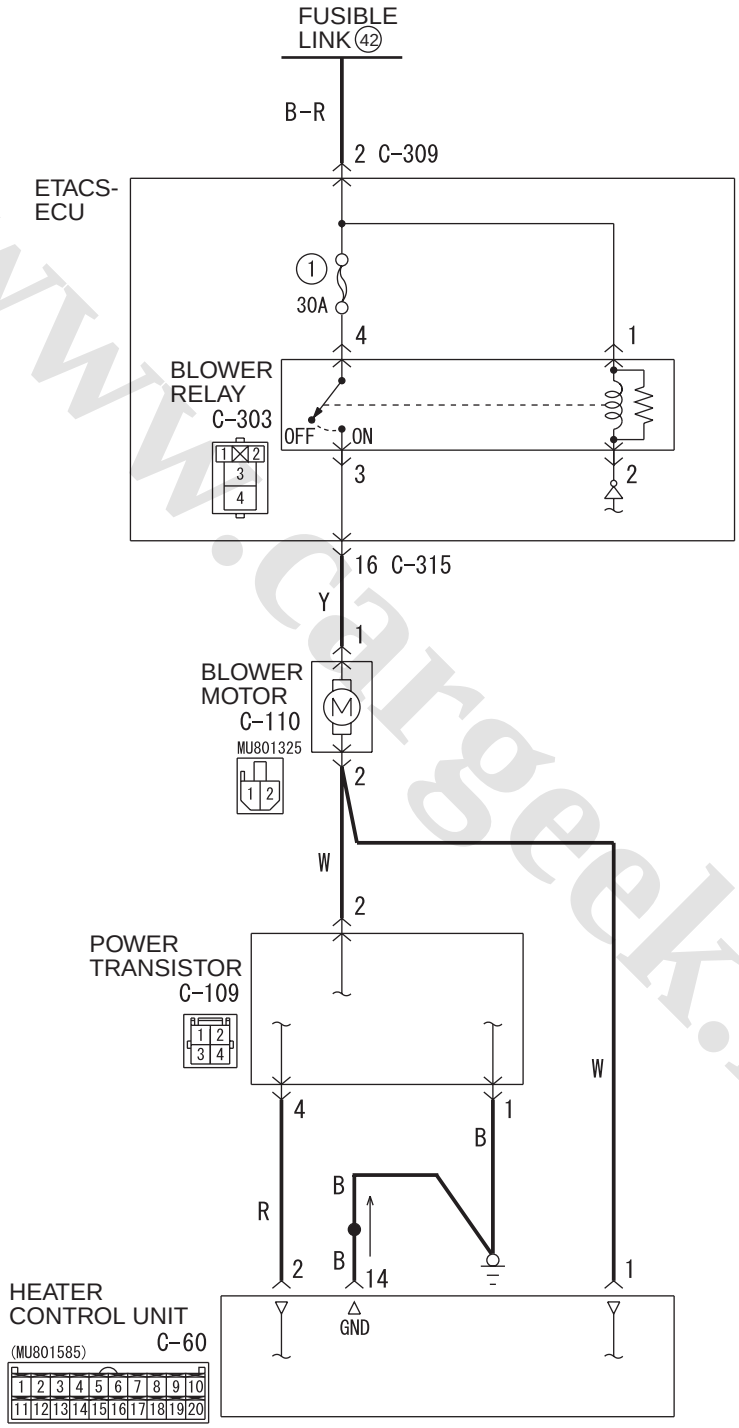

Wire colour code
B : Black LG : Light green G : Green L : Blue W : White Y : Yellow SB : Sky blue
BR : Brown O : Orange GR : Grey R : Red P : Pink V : Violet PU : Purple SI : Silver

ACB02708
W8G55X008A

www.cargeek.ir

www.CarGeek.ir

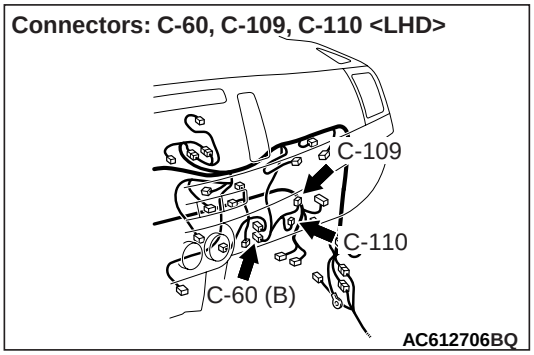

COMMENTS ON TROUBLE SYMPTOM

If air volume cannot be adjusted by using the blower control, the heater control panel, the heater control unit or the power transistor may be faulty.

PROBABLE CAUSES

- Malfunction of the power transistor
- Damaged wiring harness or connectors
- Malfunction of the heater control unit

DIAGNOSIS PROCEDURE

STEP 1. M.U.T.-III CAN bus diagnostics

Use the M.U.T.-III to diagnose the CAN bus lines.

Q: Is the check result normal?

YES : Go to Step 2.

NO : Repair the CAN bus lines (Refer to GROUP 54C, Troubleshooting).

STEP 2. M.U.T.-III diagnosis code

Check that the diagnosis code related to the air conditioner is not set.

Q: Is the diagnosis code set?

YES : Carry out the diagnosis code procedures. Refer to .

NO : Go to Step 3.

STEP 3. Connector check: C-109 power transistor controller connector

Q: Is the check result normal?

YES : Go to Step 4.

NO : Repair the connector.

STEP 4. Resistance measurement at the C-109 power transistor connector.

(1) Disconnect the connector, and measure at the wiring harness side.

(2) Continuity between terminal 1 and body earth

OK: Continuity exists (2 Ω or less)

Q: Is the check result normal?

YES : Go to Step 5.

NO : Repair the wiring harness wires between power transistor connector terminal No. 1 and body earth.

STEP 5. Connector check: C-60 heater control unit connector

Q: Is the check result normal?

YES : Go to Step 6.

NO : Repair the connector.

STEP 6. Check the wiring harness between C-110 blower motor connector terminal No.2 and C-60 heater control unit connector terminal No.1.

- Check the blower motor earth line for open circuit.

Q: Is the check result normal?

YES : Go to Step 7.

NO : Repair the wiring harness.

STEP 7. Check the wiring harness between C-109 power transistor connector terminal No.4 and C-60 heater control unit connector terminal No.2.

- Check the blower motor earth line for open circuit.

Q: Is the check result normal?

YES : Go to Step 8.

NO : Repair the wiring harness.

STEP 8. Replace the power transistor and check the trouble symptom

Check that the blower motor operates normally.

Q: Does the blower motor work normally?

YES : This diagnosis is complete.

NO : Replace the heater control unit.

www.cargeek.ir

www.CarGeek.ir

INSPECTION PROCEDURE 4: The Inside/Outside Air Changeover is impossible.

Outside/Inside Air Selection Damper Control Motor Circuit

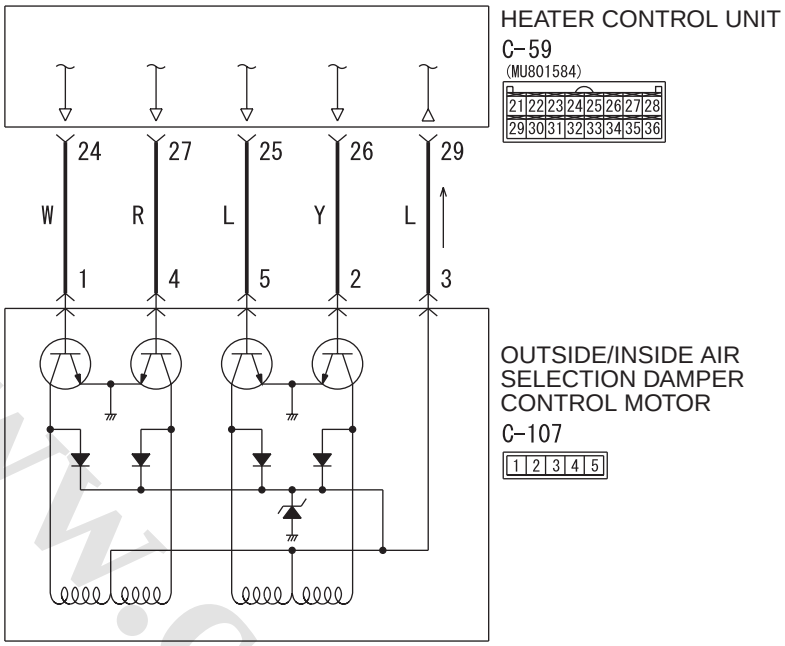

Wire colour code
B : Black LG : Light green G : Green L : Blue W : White Y : Yellow SB : Sky blue
BR : Brown O : Orange GR : Grey R : Red P : Pink V : Violet PU : Purple SI : Silver

AC801343
W8G55X009A

Heater Control Panel Circuit

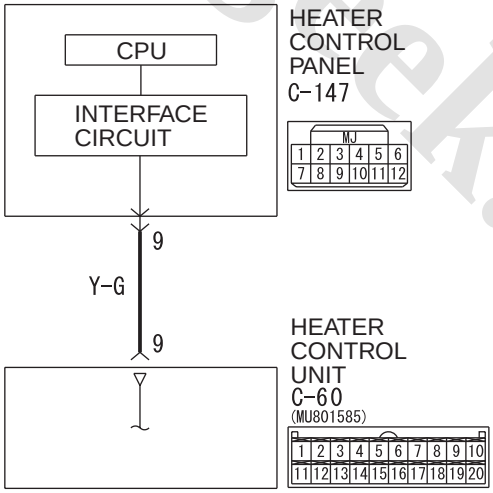

Wire colour code
B : Black LG : Light green G : Green L : Blue W : White Y : Yellow SB : Sky blue
BR : Brown O : Orange GR : Grey R : Red P : Pink V : Violet PU : Purple SI : Silver

ACA00851
W8G55X003A

www.cargeek.ir

www.CarGeek.ir

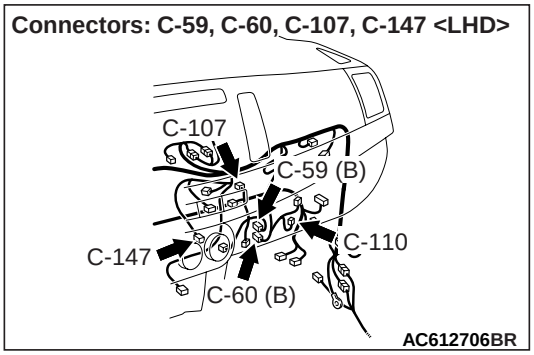

COMMENTS ON TROUBLE SYMPTOM

If the air recirculation cannot be changed by using the inside air/outside air changeover switch, the inside air/outside air changeover motor system may be faulty.

PROBABLE CAUSES

- Malfunction of the outside/inside air selection damper control motor
- Malfunction of the heater control panel
- Damaged wiring harness or connectors
- Malfunction of the heater control unit

DIAGNOSIS PROCEDURE

STEP 1. Check the operation of the heater control panel

Check that the rear window defogger switch and air volume control dial can operate.

Q: Is the check result normal?

YES : Go to Step 2.
NO : INSPECTION PROCEDURE 9: Refer to heater control unit power supply system .

STEP 2. M.U.T.-III diagnosis code

Check that the diagnosis code related to the air conditioner is not set.

Q: Is the diagnosis code set?

YES : Carry out the diagnosis code procedures. Refer to .
NO : Go to Step 3.

STEP 3. M.U.T.-III actuator test

Carry out the actuator test. (Refer to).

- Item 05: In/out selection damper (Select "position reset".)

Q: Does the blower motor work normally?

YES : This diagnosis is complete.
NO : Go to Step 4.

STEP 4. Connector check: C-147 heater control panel connector and C-60 heater control unit connector

Q: Is the check result normal?

YES : Go to Step 5.
NO : Repair the connector.

STEP 5. Check the wiring harness between C-147 heater control panel connector terminal No. 9 and C-60 heater control unit connector terminal No. 9.

- Check the heater control panel signal line for open or short circuit.

Q: Is the check result normal?

YES : Go to Step 6.
NO : Repair the wiring harness.

STEP 6. Connector check: C-59 heater control unit connector and C-107 outside/inside air selection damper control motor connector

Q: Is the check result normal?

YES : Go to Step 7.
NO : Repair the connector.

STEP 7. Check the wiring harness between C-59 heater control unit connector (terminals 29, 24, 27, 25 and 26) and C-107 outside/inside air selection damper control motor connector (terminals 3, 1, 4, 5 and 2).

- Check the heater control unit signal line and earth line for open or short circuit.

Q: Is the check result normal?

YES : Go to Step 8.
NO : Repair the wiring harness.

STEP 8. Replace the air outside/inside air circulation switching damper motor, and then recheck the trouble symptom.

Check to see that the outside air/inside air circulation switching damper motor operates normally.

NOTE: Whenever the motor is replaced, initialise the motor position by using the Actuator Test.

Q: Is the check result normal?

YES : This diagnosis is complete.
NO : Replace the heater control unit.

www.cargeek.ir

www.CarGeek.ir

INSPECTION PROCEDURE 5: Outlet air temperature cannot be set

Air Mixing Damper Control Motor Circuit

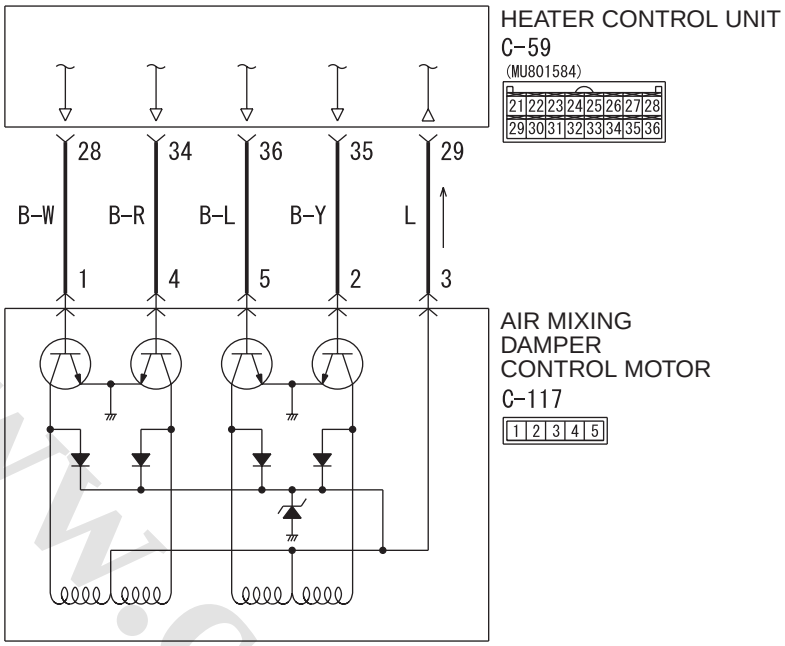

Wire colour code
B : Black LG : Light green G : Green L : Blue W : White Y : Yellow SB : Sky blue
BR : Brown O : Orange GR : Grey R : Red P : Pink V : Violet PU : Purple SI : Silver

AC801344
W8G55X005A

Connectors: C-59, C-117 <LHD>

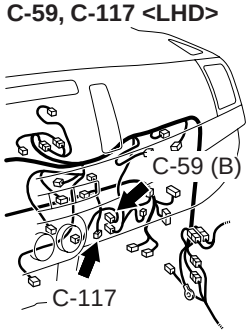

AC612706BS

COMMENTS ON TROUBLE SYMPTOM

If the air conditioner outlet temperature cannot be adjusted, the air mixing damper control motor or the heater control unit may be faulty.

NOTE: It cannot be adjusted while the engine coolant temperature is low.

PROBABLE CAUSES

- Malfunction of the air mix damper control motor
- Malfunction of the heater control unit

DIAGNOSTIC PROCEDURE

STEP 1. M.U.T.-III diagnosis code

Check that the diagnosis code related to the air conditioner is not set.

Q: Is the diagnosis code set?

YES : Carry out the diagnosis code procedures. Refer to .

NO : Go to Step 2.

STEP 2. M.U.T.-III actuator test

Carry out the actuator test. (Refer to).

- Item 06: air mixing damper control motor (Select "position reset").

Q: Is the check result normal?

YES : This diagnosis is complete.

NO : Go to Step 3.

STEP 3. Connector check: C-117 air mixing damper control motor connector, C-59 heater control unit connector

Q: Is the check result normal?

NO : Repair the connector concerned.

YES : Go to Step 4.

www.cargeek.ir

www.CarGeek.ir

STEP 4. Check the wiring harness wires between C-117 air mixing damper control motor connector (terminals 3, 2, 5, 4 and 1) and C-59 heater control unit connector (terminals 29, 35, 36, 34 and 28).

- Check the input line for open circuit.

Q: Is the check result normal?
YES : Go to Step 5.
NO : Repair the wiring harness.

STEP 5. Replace the air mixing damper control motor, and recheck the trouble symptom.
Check that outlet air temperature can be adjusted.

NOTE: Whenever the motor is replaced, initialise the motor position by using the Actuator Test.

Q: Is the check result normal?
YES : This diagnosis is complete.
NO : Replace the heater control unit.

INSPECTION PROCEDURE 6: Air outlets changeover is impossible.

Mode Selection Damper Control Motor Circuit

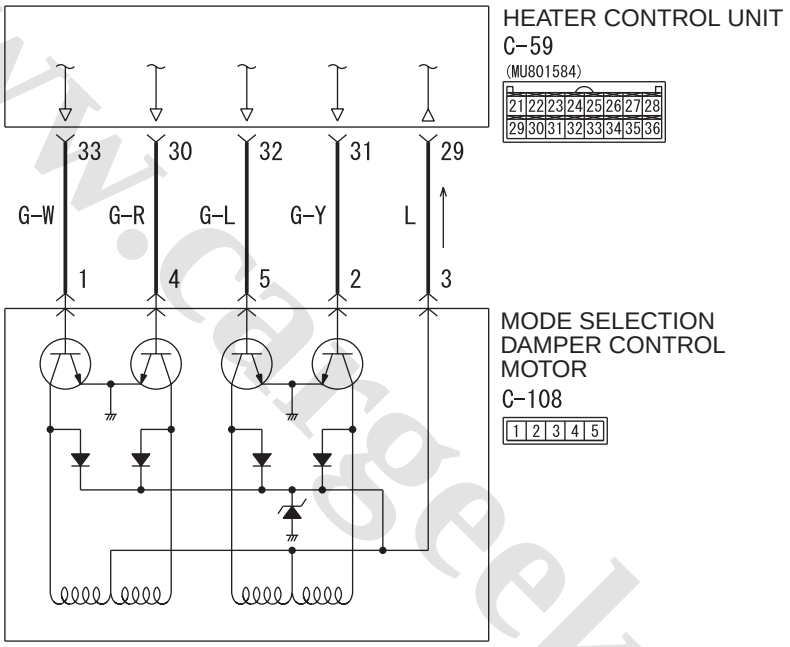

Wire colour code
B : Black LG : Light green G : Green L : Blue W : White Y : Yellow SB : Sky blue
BR : Brown O : Orange GR : Grey R : Red P : Pink V : Violet PU : Purple SI : Silver

AC801345
W8G55X006A

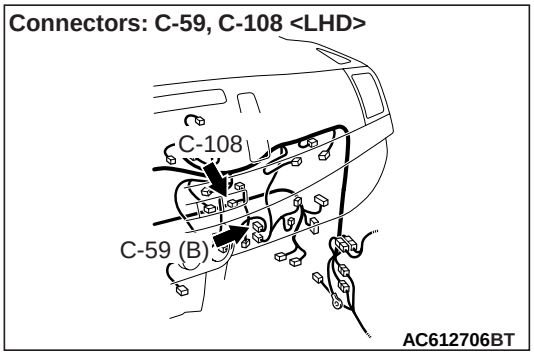

COMMENTS ON TROUBLE SYMPTOM

If the air conditioner outlets changeover is impossible, the mode selection damper control motor or the heater control unit may be faulty.

PROBABLE CAUSES

- Malfunction of the mode selection damper control motor
- Malfunction of the heater control unit

DIAGNOSTIC PROCEDURE

STEP 1. M.U.T.-III diagnosis code
Check that the diagnosis code related to the air conditioner is not set.

Q: Is the diagnosis code set?
YES : Carry out the diagnosis code procedures. Refer to .
NO : Go to Step 2.

www.cargeek.ir

www.CarGeek.ir

STEP 2. M.U.T.-III actuator test

Carry out the actuator test. (Refer to).

- Item 08: Air outlet c/o damper: (Select "position reset".)

Q: Is the check result normal?

YES : This diagnosis is complete.

NO : Go to Step 3.

STEP 3. Connector check: C-108 mode selection damper control motor connector and C-59 heater control unit connector

Q: Is the check result normal?

YES : Go to Step 4.

NO : Repair the connector concerned.

STEP 4. Check the wiring harness wires between C-108 mode selection damper control motor connector (terminals 1, 4, 5, 2 and 3) and C-59 heater control unit connector (terminals 33, 30, 32, 31 and 29).

- Check the input line for open circuit.

Q: Is the check result normal?

YES : Go to Step 5.

NO : Repair the wiring harness.

STEP 5. Replace the mode selection damper control motor, and recheck the trouble symptom.

Check that the air outlets can be changed.

NOTE: Whenever the motor is replaced, initialise the motor position by using the Actuator Test.

Q: Is the check result normal?

YES : This diagnosis is complete.

NO : Replace the heater control unit.

www.cargeek.ir

www.cargeek.ir

www.CarGeek.ir

INSPECTION PROCEDURE 7: Blower motor power supply system

Blower Motor Circuit

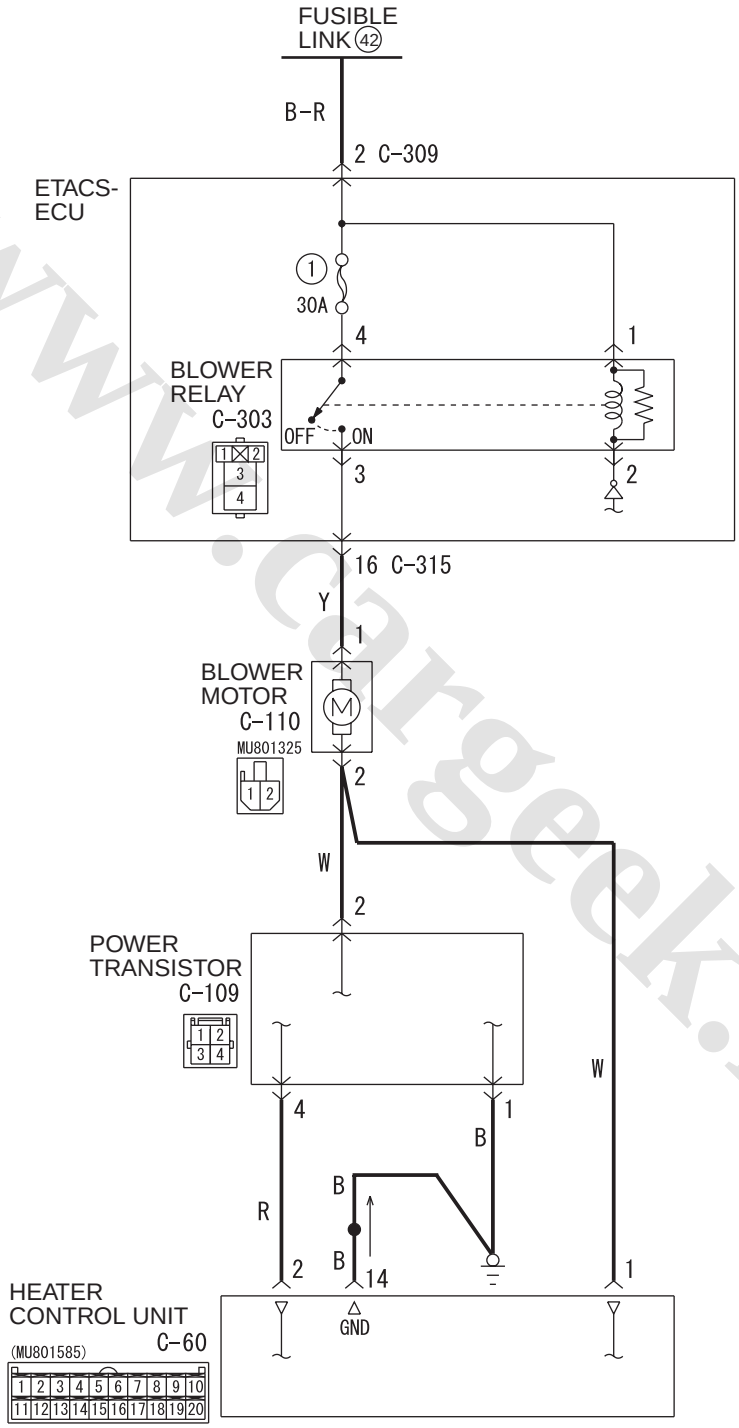

Wire colour code
B : Black LG : Light green G : Green L : Blue W : White Y : Yellow SB : Sky blue
BR : Brown O : Orange GR : Grey R : Red P : Pink V : Violet PU : Purple SI : Silver

ACB02708
W8G55X008A

www.cargeek.ir

www.CarGeek.ir

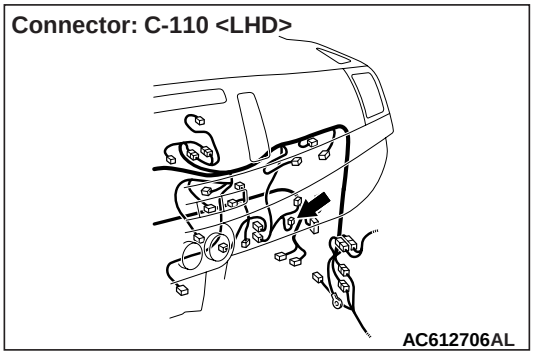

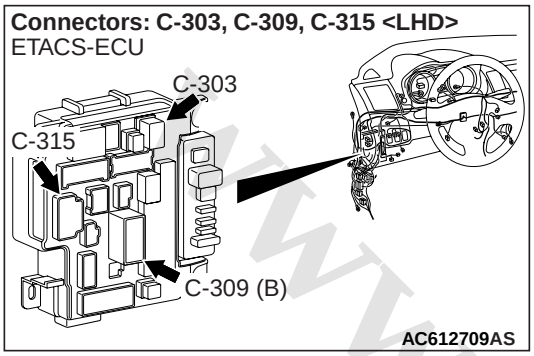

COMMENTS ON TROUBLE SYMPTOM

If the blower motor is not energised, the blower relay system is suspected.

PROBABLE CAUSES

- Malfunction of the blower relay
- Damaged wiring harness or connector
- Malfunction of the ETACS-ECU

DIAGNOSTIC PROCEDURE

STEP 1. Connector check: C-303 blower relay connector

Q: Is the check result normal?

YES : Go to Step 2.
NO : Repair the connector concerned.

STEP 2. Measure the voltage at C-303 blower relay connector.

(1) Remove the relay, and measure at the junction block side.
(2) Voltage between terminals 1, 4 and body earth

OK: System voltage

Q: Is the check result normal?

YES : Go to Step 4.
NO : Go to Step 3.

STEP 3. Check the wiring harness between C-303 blower relay connector terminal No. 1, 4 and fusible link (42) .

- Check the power supply line for open circuit.

NOTE: Prior to the wiring harness inspection, check ETACS-ECU connector C-309, and repair if necessary.

Q: Is the check result normal?

YES : Intermittent malfunction (Refer to GROUP 00 – How to Use Troubleshooting/ Inspection Service Points - How to Cope with Intermittent Malfunction).
NO : Repair the wiring harness.

STEP 4. Connector check: C-110 blower motor connector

Q: Is the check result normal?

YES : Go to Step 5.
NO : Repair the connector concerned.

STEP 5. Check the wiring harness between C-110 blower motor connector terminal No. 1 and C-303 blower relay connector terminal No. 3.

NOTE: Prior to the wiring harness inspection, check junction block connector C-315, and repair if necessary.

Q: Is the check result normal?

YES : Go to Step 6.
NO : Repair the wiring harness.

STEP 6. Retest the system.

Check that the blower motor is energised.

Q: Is the check result normal?

YES : Intermittent malfunction (Refer to GROUP 00 – How to Use Troubleshooting/ Inspection Service Points - How to Cope with Intermittent Malfunction).
NO : Replace the ETACS-ECU.

www.cargeek.ir

www.CarGeek.ir

INSPECTION PROCEDURE 8: Heater control unit power supply system

Heater Control Unit Power Source Circuit

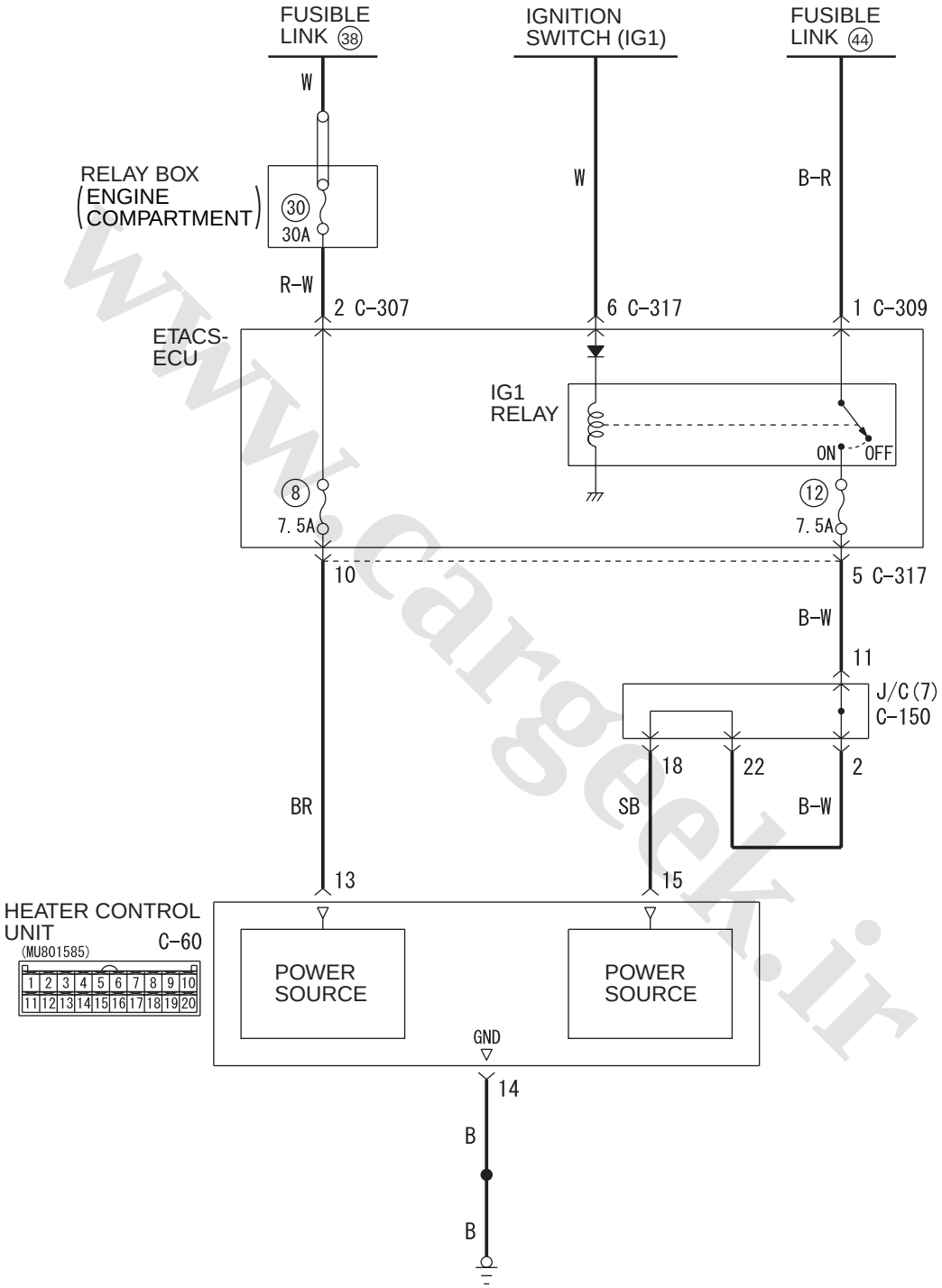

Wire colour code
B : Black LG : Light green G : Green L : Blue W : White Y : Yellow SB : Sky blue
BR : Brown O : Orange GR : Grey R : Red P : Pink V : Violet PU : Purple SI : Silver

WBH55E000A

www.cargeek.ir

www.CarGeek.ir

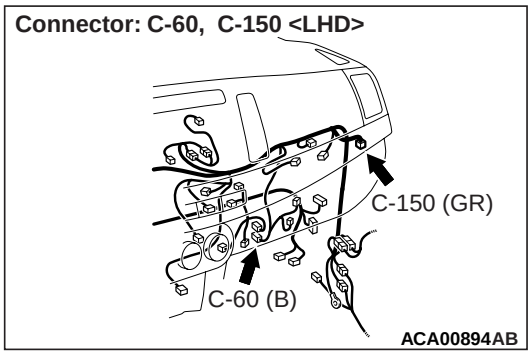

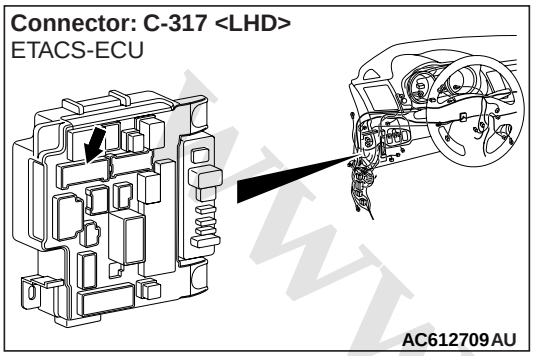

COMMENTS ON TROUBLE SYMPTOM

If the heater control unit is not energised, the power supply or earth system to the ECU may be defective.

PROBABLE CAUSES

- Malfunction of the heater control unit
- Damaged wiring harness or connectors

DIAGNOSTIC PROCEDURE

STEP 1. M.U.T.-III other system's diagnosis code

Check that the ETACS-ECU has not set a diagnosis code.

Q: Is the diagnosis code set?

YES : Carry out the diagnosis code procedures . Refer to GROUP 54A, ETACS-ECU .

NO : Go to Step 2.

STEP 2. Connector check: C-60 heater control unit connector

Q: Is the check result normal?

YES : Go to Step 3.

NO : Repair the connector concerned.

STEP 3. Measure the voltage at the C-60 heater control unit connector.

(1) Disconnect the connector, and measure at the wiring harness side.

(2) Ignition switch: ON

(3) Voltage between terminal No. 15 and body earth

OK: System voltage

Q: Is the check result normal?

YES : Go to Step 6.

NO : Go to Step 4.

STEP 4. Connector check: C-317 ETACS-ECU connector

Q: Is the check result normal?

YES : Go to Step 5.

NO : Repair the connector concerned.

STEP 5. Check the wiring harness between C-60 heater control unit connector terminal No. 15 and C-317 ETACS-ECU connector terminal No. 5.

- Check the power supply line for open circuit.

NOTE: Prior to the wiring harness inspection, check joint connector C-150, and repair if necessary.

Q: Is the check result normal?

YES : Intermittent malfunction (Refer to GROUP 00 – How to Use Troubleshooting/ Inspection Service Points - How to Cope with Intermittent Malfunction).

NO : Repair the wiring harness.

STEP 6. Measure the voltage at the C-60 heater control unit connector.

(1) Disconnect the connector, and measure at the wiring harness side.

(2) Voltage between terminal No. 13 and body earth

OK: System voltage

Q: Is the check result normal?

YES : Go to Step 8.

NO : Go to Step 7.

STEP 7. Check the wiring harness between C-60 heater control unit connector terminal No. 13 and C-317 ETACS-ECU connector terminal No. 10.

- Check the power supply line for open circuit.

Q: Is the check result normal?

YES : Intermittent malfunction (Refer to GROUP 00 – How to Use Troubleshooting/ Inspection Service Points - How to Cope with Intermittent Malfunction).

NO : Repair the wiring harness.

STEP 8. Measure the resistance at the C-60 heater control unit connector.

(1) Disconnect the connector, and measure at the wiring harness side.

www.cargeek.ir

www.CarGeek.ir

(2) Resistance between terminal No. 14 and body earth

OK: Continuity exists (2 Ω or less)

Q: Is the check result normal?

YES : Replace the heater control unit.

NO : Go to Step 9.

STEP 9. Check the wiring harness between C-60 heater control unit connector terminal No. 14 and body earth.

- Check the earth wires for open circuit.

Q: Is the check result normal?

YES : Intermittent malfunction (Refer to GROUP 00 – How to Use Troubleshooting/ Inspection Service Points - How to Cope with Intermittent Malfunction).

NO : Repair the wiring harness.

TROUBLE SYMPTOM CHART <VEHICLES WITH A/C>

M1554005002629

Trouble symptom	Inspection procedure No.	Reference page
Communication with the M.U.T.-III is not possible	1	
Cool air does not come	2	
The blower does not work	3	
The blower air volume cannot be changed	4	
The inside/outside air changeover is impossible	5	
The A/C compressor does not work <Petrol engine>	6	
The A/C compressor does not work <Diesel engine>	7	
The A/C indicator flashes	8	
A/C outlet air temperature cannot be set	9	
Air outlets changeover is impossible	10	
A/C pressure sensor system	11	
Blower motor power supply system	12	
A/C-ECU power supply system	13	
The PTC heater does not work <Vehicles with PTC heater>	14	
The buzzer does not sound	15	(Refer to GROUP 54A – Combination Meter).

SYMPTOM PROCEDURES

INSPECTION PROCEDURE 1: Communication with the M.U.T.-III is not possible.

COMMENTS ON TROUBLE SYMPTOM

If communication with all other systems is not possible, there is a high possibility that there is a malfunction of the diagnosis line. If only the A/C system can not communicate with the M.U.T.-III, the A/C-ECU may be defective.

PROBABLE CAUSE

Malfunction of the A/C-ECU

DIAGNOSIS PROCEDURE

STEP 1. M.U.T.-III CAN bus diagnostics

Use the M.U.T.-III to diagnose the CAN bus lines.

Q: Is the check result normal?

www.cargeek.ir

www.CarGeek.ir

YES : Check and repair the power supply circuit system.
NO : Repair the CAN bus line (Refer to GROUP 54C, Troubleshooting).

INSPECTION PROCEDURE 2: Cool air does not come

CIRCUIT OPERATION
If the blower air temperature can not be cool when turning A/C switch ON and lowering the preset temperature, inadequate refrigerant quantity, sensors, harness or connectors may be suspected.

PROBABLE CAUSE
Damaged wiring harness or connectors

DIAGNOSIS PROCEDURE

STEP 1. Check the blower operation
Check that air blows through the air outlets.
(1) Turn the ignition switch to the ON position.
(2) Blower knob: Other than OFF
(3) Check that the air comes out of the blower.

Q: Is the check result normal?
YES : Go to Step 2.
NO : Refer to Inspection Procedure 3 "The blower does not work ".

STEP 2. Check the A/C compressor operation
Check that the compressor operates under the following conditions.
- Engine operation
- Air conditioner switch: ON
- Blower knob: Maximum air volume
- Temperature control dial: 18°C (MAX COOL)

NOTE: The compressor does not work when the blower intake temperature is 0℃ or less.

Q: Is the check result normal?
YES : Go to Step 3.
NO : Refer to Inspection Procedure 6 "The A/C compressor does not work < Petrol engine> ", Inspection Procedure 7 "The A/C compressor does not work <Diesel engine> ".

STEP 3. M.U.T.-III CAN bus diagnostics
Use the M.U.T.-III to diagnose the CAN bus lines.

Q: Is the check result normal?
YES : Go to Step 4.
NO : Repair the CAN bus lines. (Refer to GROUP 54C – Troubleshooting).

STEP 4. M.U.T.-III diagnosis code
Check that the diagnosis code related to the air conditioner is not set.

Q: Is the diagnosis code set?
YES : Carry out the diagnosis code procedures. Refer to .
NO : Go to Step 5.

STEP 5. Refrigerant level check
Check that the refrigerant level is adequate. Refer to .

Q: Is the check result normal?
YES : Intermittent malfunction (Refer to GROUP 00, How to Cope with Intermittent Malfunction).
NO : Charge or remove the refrigerant level. Refer to .

www.cargeek.ir

www.CarGeek.ir

INSPECTION PROCEDURE 3: The blower does not work

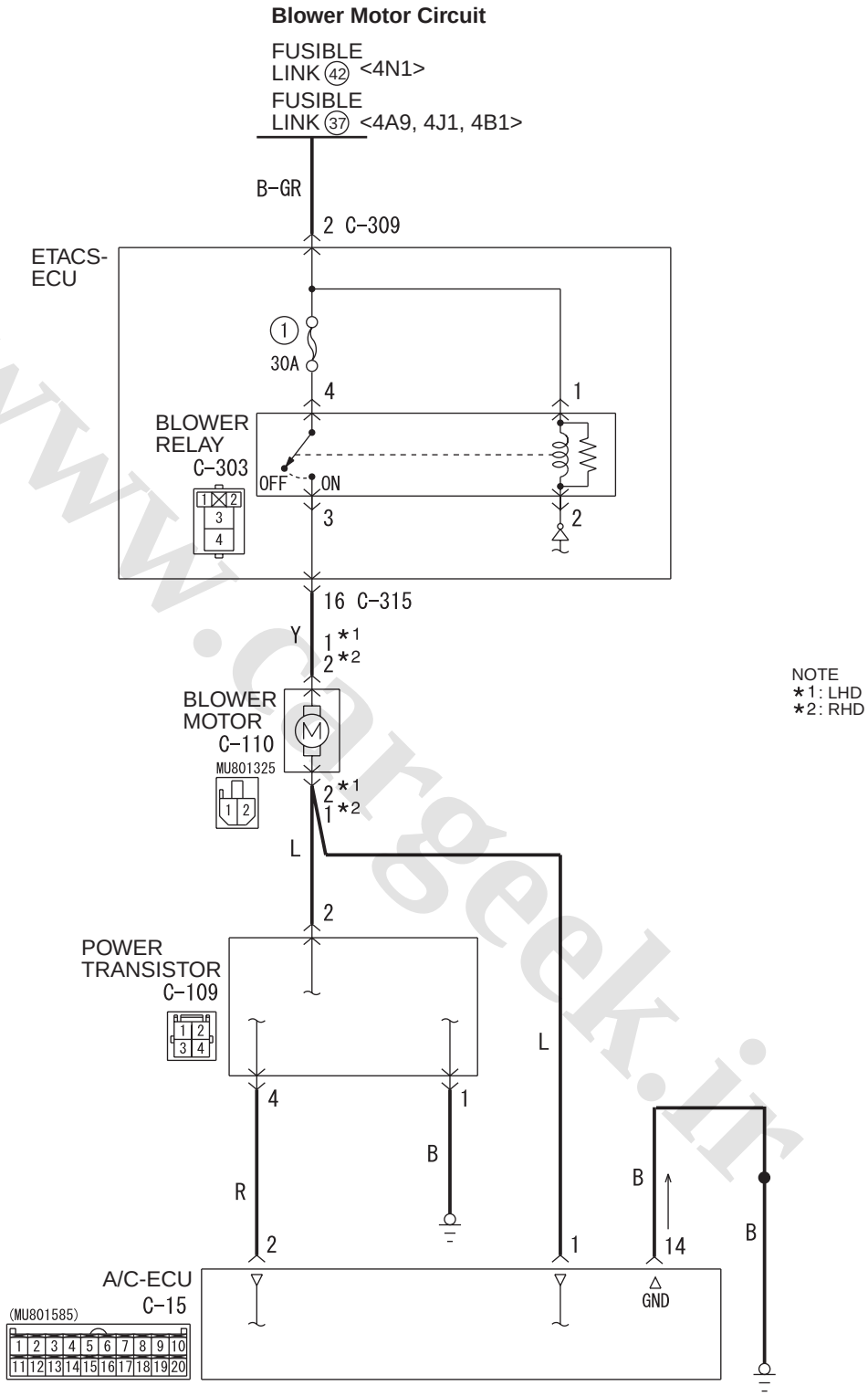

Wire colour code
B : Black LG : Light green G : Green L : Blue W : White Y : Yellow SB : Sky blue
BR : Brown O : Orange GR : Grey R : Red P : Pink V : Violet PU : Purple SI : Silver

ACB02688
W8G55X008A

www.cargeek.ir

www.CarGeek.ir

Connectors: C-15, C-109, C-110 <LHD>

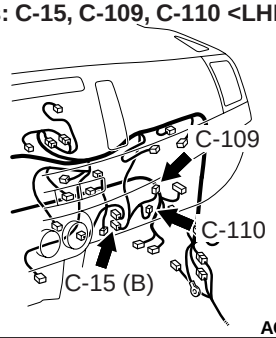

Connectors: C-15, C-109, C-110 <RHD>

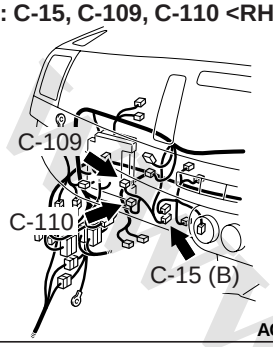

Connector: C-303<LHD>
ETACS-ECU

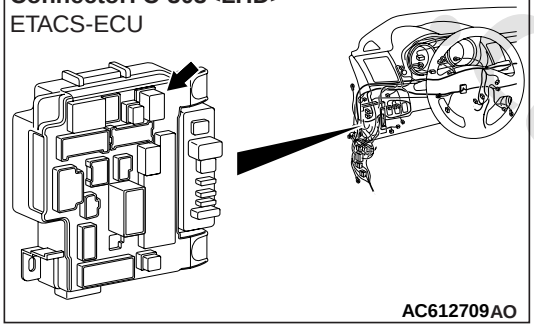

Connector: C-303 <RHD>
ETACS-ECU

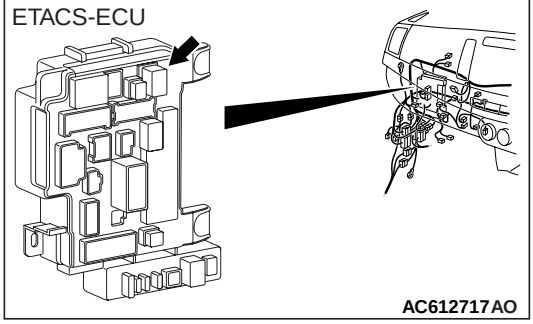

COMMENTS ON TROUBLE SYMPTOM

If the blower motor does not operate, the blower motor circuit system may be defective.

PROBABLE CAUSES

- Malfunction of the blower motor
- Malfunction of the power transistor
- Malfunction of the A/C-ECU
- Damaged wiring harness or connectors

DIAGNOSIS PROCEDURE

STEP 1. M.U.T.-III CAN bus diagnostics

Use the M.U.T.-III to diagnose the CAN bus lines.

Q: Is the check result normal?
YES : Go to Step 2.
NO : Repair the CAN bus lines (Refer to GROUP 54C – Troubleshooting).

STEP 2. M.U.T.-III diagnosis code.

Recheck if the diagnosis code is set.
(1) Erase the diagnosis code.
(2) Ignition switch: LOCK (OFF) to ON
(3) Check if the diagnosis code is set.

Q: Is the diagnosis code set?
YES : Carry out the diagnosis code procedures. Refer to .
NO : Go to Step 3.

STEP 3. Connector check: C-303 blower relay connector

Q: Is the check result normal?
YES : Go to Step 4.
NO : Repair the connector.

STEP 4. Check the blower relay.

Refer to .

Q: Is the blower relay in good condition?
YES : Go to Step 5.
NO : Replace the blower relay.

STEP 5. Connector check: C-110 blower motor connector

Q: Is the check result normal?
YES : Go to Step 6.
NO : Repair the connector.

STEP 6. Check the blower motor.

Refer to .

Q: Is the check result normal?
YES : Go to Step 7.
NO : Replace the blower motor.

STEP 7. Voltage measurement at C-110 blower motor connector.

(1) Disconnect the connector, and measure at the wiring harness side.
(2) Turn the ignition switch to the ON position.
(3) Voltage between terminal 1 and body earth.

www.cargeek.ir

www.CarGeek.ir

<LHD>

OK: System voltage

(4) Voltage between terminal 2 and body earth.
<RHD>

OK: System voltage

Q: Is the check result normal?
YES : Go to Step 8.
NO : INSPECTION PROCEDURE 14: Refer to "Blower motor power supply system" .

STEP 8. Connector check: C-109 power transistor controller connector

Q: Is the check result normal?
YES : Go to Step 9.
NO : Repair the connector.

STEP 9. Resistance measurement at the C-109 power transistor connector.
(1) Disconnect the connector, and measure at the wiring harness side.
(2) Continuity between terminal 1 and body earth

OK: Continuity exists (2 Ω or less)

Q: Is the check result normal?
YES : Go to Step 10.
NO : Repair the wiring harness wires between power transistor connector terminal No. 1 and body earth.

STEP 10. Check the wiring harness between C-110 blower motor connector terminal No.2 <LHD> or 1 <RHD> and C-109 power transistor connector terminal No.2.
- Check the power transistor power supply line for open circuit.

Q: Is the check result normal?
YES : Go to Step 11.
NO : Repair the wiring harness.

STEP 11. Connector check: C-15 A/C-ECU connector

Q: Is the check result normal?
YES : Go to Step 12.
NO : Repair the connector.

STEP 12. Check the wiring harness between C-110 blower motor connector terminal No.2 <LHD> or 1 <RHD> and C-15 A/C-ECU connector terminal No.1.
- Check the blower motor power supply line for open circuit.

Q: Is the check result normal?
YES : Go to Step 13.
NO : Repair the wiring harness.

STEP 13. Check the wiring harness between C-109 power transistor connector terminal No.4 and C-15 A/C-ECU connector terminal No.2.
- Check the power transistor power supply line for open circuit.

Q: Is the check result normal?
YES : Go to Step 14.
NO : Repair the wiring harness.

STEP 14. Check the wiring harness between C-15 A/C-ECU connector terminal No.14 and body earth.
- Check the power transistor power supply line for open circuit.

Q: Is the check result normal?
YES : Go to Step 15.
NO : Repair the wiring harness.

STEP 15. Replace the power transistor and recheck the trouble symptom
Check that the blower motor operates normally.

Q: Is the check result normal?
YES : This diagnosis is complete.
NO : Replace the A/C-ECU.

www.cargeek.ir

www.CarGeek.ir

INSPECTION PROCEDURE 4: The blower air volume cannot be changed

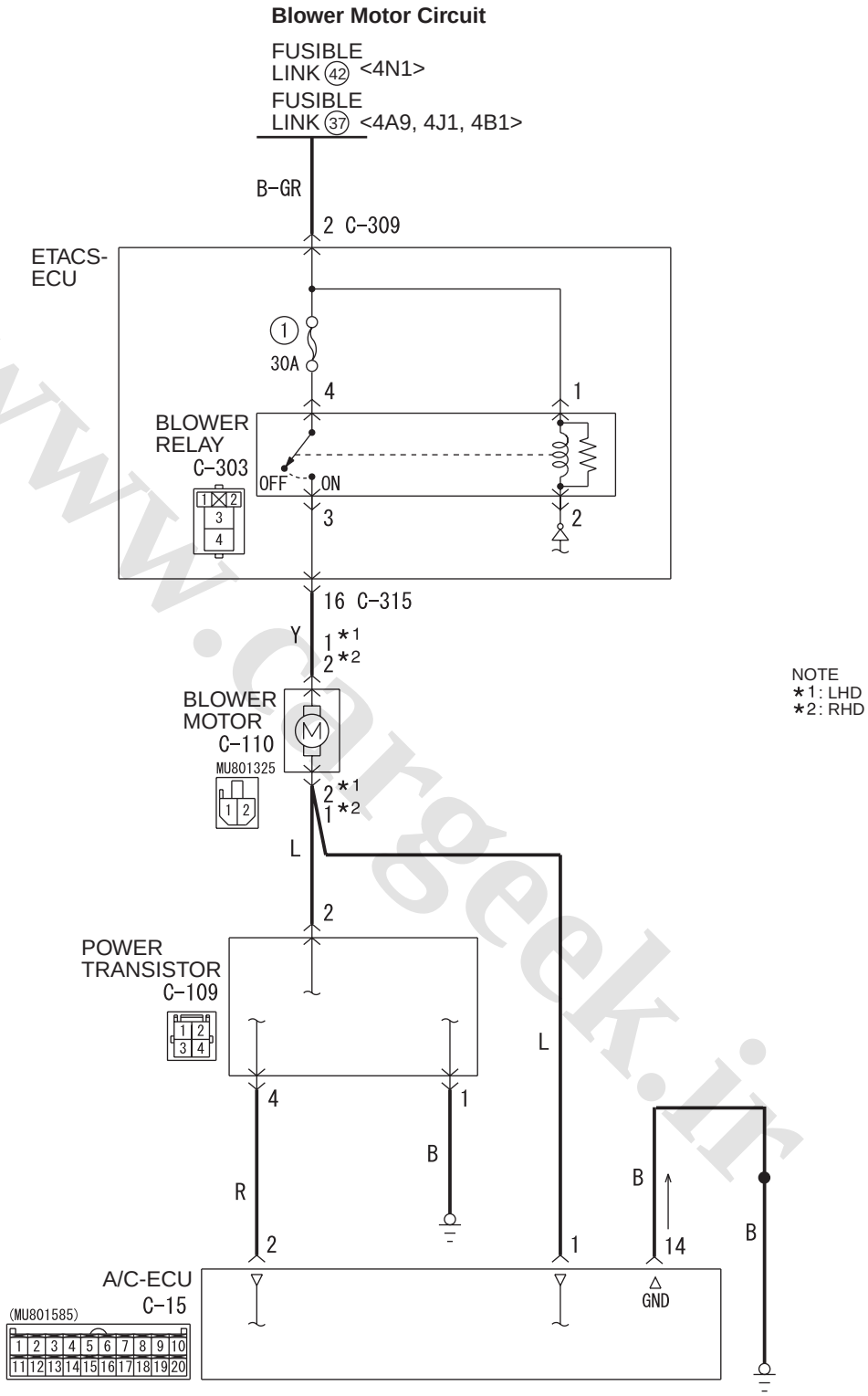

Wire colour code
B : Black LG : Light green G : Green L : Blue W : White Y : Yellow SB : Sky blue
BR : Brown O : Orange GR : Grey R : Red P : Pink V : Violet PU : Purple SI : Silver

ACB02688
W8G55X008A

www.cargeek.ir

www.CarGeek.ir

Connectors: C-15, C-109, C-110 <LHD>

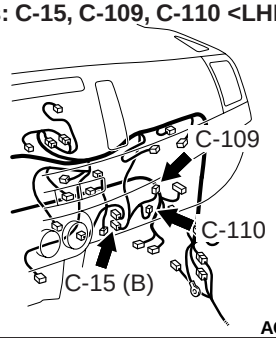

Connectors: C-15, C-109, C-110 <RHD>

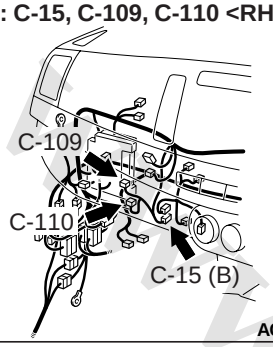

COMMENTS ON TROUBLE SYMPTOM

If air volume cannot be adjusted by using the blower control, the A/C control panel, the A/C-ECU or the power transistor may be faulty.

PROBABLE CAUSES

- Malfunction of the A/C control panel
- Malfunction of the power transistor
- Damaged wiring harness or connectors
- Malfunction of the A/C-ECU

DIAGNOSIS PROCEDURE

STEP 1. M.U.T.-III CAN bus diagnostics

Use the M.U.T.-III to diagnose the CAN bus lines.

Q: Is the check result normal?

YES : Go to Step 2.

NO : Repair the CAN bus lines (Refer to GROUP 54C, Troubleshooting).

STEP 2. M.U.T.-III diagnosis code

Check that the diagnosis code related to the air conditioner is not set.

Q: Is the diagnosis code set?

YES : Carry out the diagnosis code procedures. Refer to .

NO : Go to Step 3.

YES : Go to Step 9.

STEP 3. Connector check: C-109 power transistor controller connector

Q: Is the check result normal?

YES : Go to Step 4.

NO : Repair the connector.

STEP 4. Resistance measurement at the C-109 power transistor connector.

(1) Disconnect the connector, and measure at the wiring harness side.

(2) Continuity between terminal 1 and body earth

OK: Continuity exists (2 Ω or less)

Q: Is the check result normal?

YES : Go to Step 5.

NO : Repair the wiring harness wires between power transistor connector terminal No. 1 and body earth.

STEP 5. Connector check: C-15 A/C-ECU connector

Q: Is the check result normal?

YES : Go to Step 6.

NO : Repair the connector.

STEP 6. Check the wiring harness between C-110 blower motor connector terminal No.2 <LHD> or 1 <RHD> and C-15 A/C-ECU connector terminal No.1.

- Check the blower motor earth line for open circuit.

Q: Is the check result normal?

YES : Go to Step 7.

NO : Repair the wiring harness.

STEP 7. Check the wiring harness between C-109 power transistor connector terminal No.4 and C-15 A/C-ECU connector terminal No.2.

- Check the blower motor earth line for open circuit.

Q: Is the check result normal?

YES : Go to Step 8.

NO : Repair the wiring harness.

STEP 8. Check the wiring harness between C-15 A/C-ECU connector terminal No.14 and body earth.

- Check the power transistor power supply line for open circuit.

Q: Is the check result normal?

NO : Repair the wiring harness.

www.cargeek.ir

www.CarGeek.ir

STEP 9. Replace the power transistor and recheck the trouble symptom

Check that the blower motor operates normally.

Q: Is the check result normal?

YES : This diagnosis is complete.
NO : Replace the A/C-ECU.

INSPECTION PROCEDURE 5: The Inside/Outside Air Changeover is impossible.

Outside/Inside Air Selection Damper Control Motor Circuit

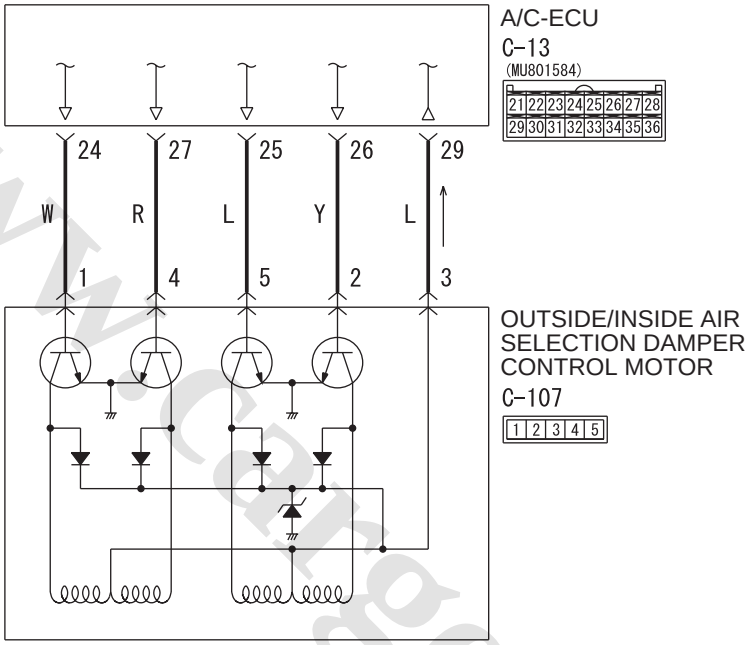

Wire colour code
B : Black LG : Light green G : Green L : Blue W : White Y : Yellow SB : Sky blue
BR : Brown O : Orange GR : Grey R : Red P : Pink V : Violet PU : Purple SI : Silver

W8G55X009A

www.cargeek.ir

www.CarGeek.ir

A/C Control Panel Circuit

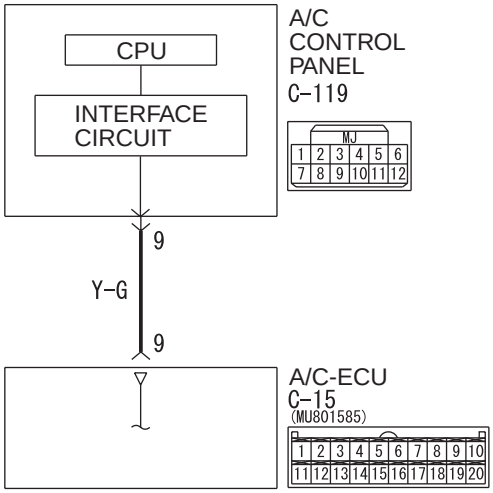

Wire colour code
B : Black LG : Light green G : Green L : Blue W : White Y : Yellow SB : Sky blue
BR : Brown O : Orange GR : Grey R : Red P : Pink V : Violet PU : Purple SI : Silver

ACA00799
W8G55X003A

Connectors: C-13, C-15, C-107, C-119 <LHD>

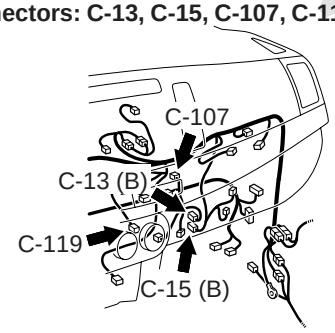

AC612706AG

Connectors: C-13, C-15, C-107 <RHD>

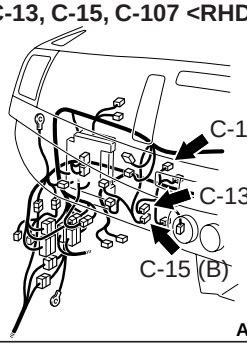

AC612710AU

Connector: C-119 <RHD>

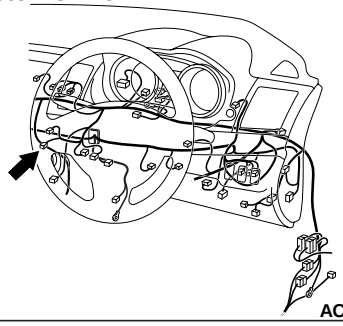

AC612711AG

COMMENTS ON TROUBLE SYMPTOM

If the air recirculation cannot be changed by using the inside air/outside air changeover switch, the inside air/outside air changeover motor system may be faulty.

PROBABLE CAUSES

- Malfunction of the outside/inside air selection damper control motor
- Malfunction of the A/C control panel
- Damaged wiring harness or connectors
- Malfunction of the A/C-ECU

DIAGNOSIS PROCEDURE

STEP 1. Check the operation of the heater control panel

Check that the A/C switch, rear window defogger switch and air volume control dial can operate.

Q: Is the check result normal?

YES : Go to Step 2.

NO : INSPECTION PROCEDURE 15: Refer to A/C-ECU power supply system .

STEP 2. M.U.T.-III diagnosis code

Check that the diagnosis code related to the air conditioner is not set.

Q: Is the diagnosis code set?

YES : Carry out the diagnosis code procedures. Refer to .

NO : Go to Step 3.

www.cargeek.ir

www.CarGeek.ir

STEP 3. M.U.T.-III actuator test

Carry out the actuator test. (Refer to).

- Item 05: In/out selection damper (Select "position reset".)

Q: Does the blower motor work normally?

YES : This diagnosis is complete.
NO : Go to Step 4.

STEP 4. Connector check: C-119 A/C control panel connector and C-15 A/C-ECU connector

Q: Is the check result normal?

YES : Go to Step 5.
NO : Repair the connector.

STEP 5. Check the wiring harness between C-119 A/C control panel connector terminal No. 9 and C-15 A/C-ECU connector terminal No. 9.

- Check the A/C control panel signal line for open or short circuit.

Q: Is the check result normal?

YES : Go to Step 6.
NO : Repair the wiring harness.

STEP 6. Connector check: C-13 A/C-ECU connector and C-107 outside/inside air selection damper control motor connector

Q: Is the check result normal?

YES : Go to Step 7.
NO : Repair the connector.

STEP 7. Check the wiring harness between C-13 A/C-ECU connector (terminals 29, 24, 27, 25 and 26) and C-107 outside/inside air selection damper control motor connector (terminals 3, 1, 4, 5 and 2).

- Check the A/C control panel signal line and earth line for open or short circuit.

Q: Is the check result normal?

YES : Go to Step 8.
NO : Repair the wiring harness.

STEP 8. Replace the air outside/inside air circulation switching damper motor, and then recheck the trouble symptom.

Check to see that the outside air/inside air circulation switching damper motor operates normally.

NOTE: Whenever the motor is replaced, initialise the motor position by using the Actuator Test.

Q: Is the check result normal?

YES : This diagnosis is complete.
NO : Replace the A/C-ECU.

www.cargeek.ir
www.cargeek.ir

www.CarGeek.ir

INSPECTION PROCEDURE 6: The A/C compressor does not work <Petrol engine>

A/C Compressor Assembly Circuit <Petrol engine>

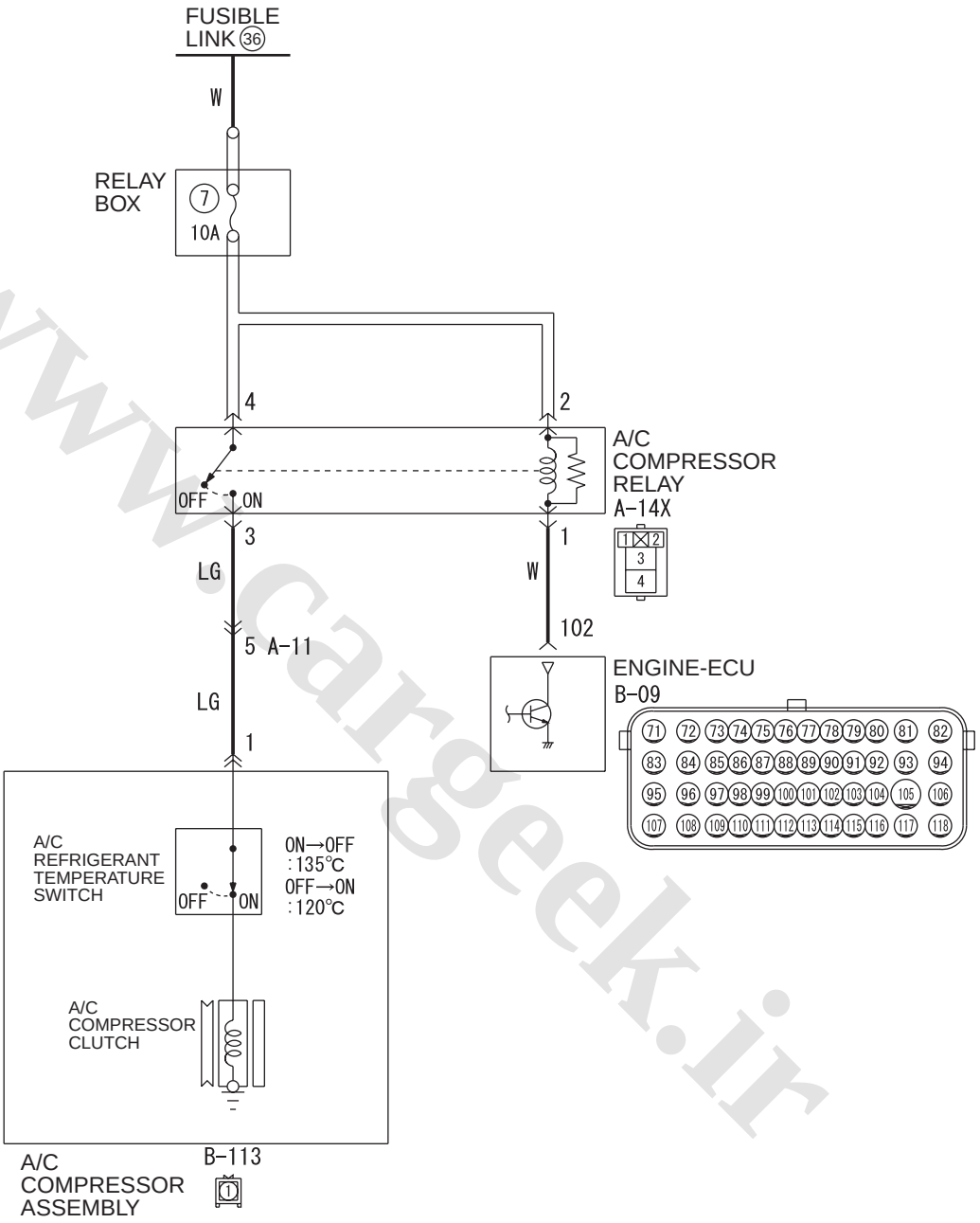

Wire colour code
B : Black LG : Light green G : Green L : Blue W : White Y : Yellow SB : Sky blue
BR : Brown O : Orange GR : Grey R : Red P : Pink V : Violet PU : Purple SI : Silver

ACB02673
W8G55E003A

www.cargeek.ir

www.CarGeek.ir

Connector: A-11

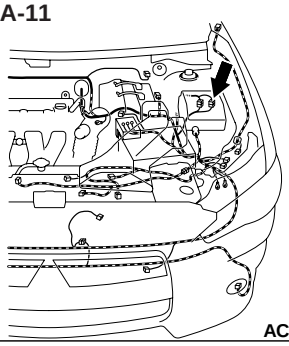

AC612690AE

Connector: A-14X

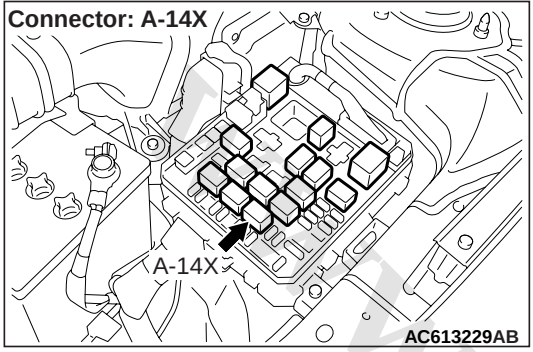

AC613229AB

Connector: B-09

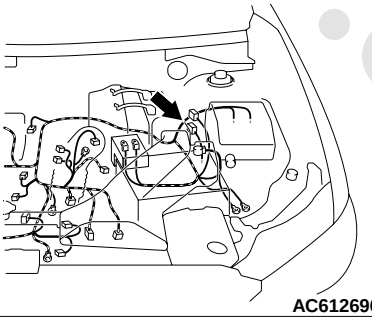

AC612696AB

Connector: B-113 <1600>

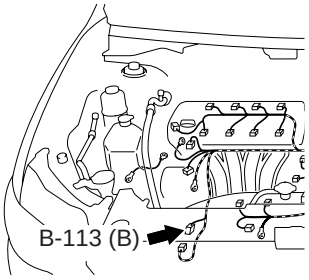

ACB02650AB

Connector: B-113 <Except 1600>

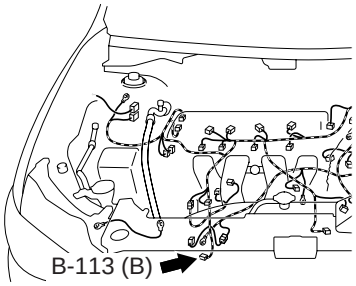

ACB02652 AB

COMMENTS ON TROUBLE SYMPTOM

When the A/C compressor does not work, the A/C compressor circuit system may be defective.

PROBABLE CAUSES

- Malfunction of the A/C compressor
- Malfunction of the A/C compressor relay
- Damaged harness wires or connectors
- Malfunction of the engine-ECU

DIAGNOSIS PROCEDURE

STEP 1. M.U.T.-III CAN bus diagnostics

Use the M.U.T.-III to diagnose the CAN bus lines.

Q: Is the check result normal?

YES : Go to Step 2.

NO : Repair the CAN bus lines. (Refer to GROUP 54C – Troubleshooting).

STEP 2. M.U.T.-III diagnosis code

Check whether the A/C sets a diagnosis code or not.

Q: Is the check result normal?

YES : Go to Step 3.

NO : Refer to diagnosis code chart .

STEP 3. Connector check: B-113 A/C compressor assembly connector and B-09 engine-ECU connector

Q: Is the check result normal?

YES : Go to Step 4.

NO : Repair the connector.

STEP 4. Voltage measurement at B-113 A/C compressor assembly connector.

(1) Disconnect the connector, and measure at the wiring harness side.
(2) Turn the ignition switch to the "ON" position.
(3) Disconnect engine-ECU connector B-09 and earth terminal 102.
(4) Voltage between terminal 1 and body earth.

OK: System voltage

Q: Is the check result normal?

YES : Go to Step 5.

NO : Go to Step 9.

STEP 5. Check the A/C compressor.

Refer to .

Q: Is the check result normal?

YES : Go to Step 6.

NO : Replace the A/C compressor.

www.cargeek.ir

www.CarGeek.ir

STEP 6. Check the refrigerant temperature switch.
Refer to .

Q: Is the refrigerant temperature switch operating properly?
YES : Go to Step 7.
NO : Replace the refrigerant temperature switch.

STEP 7. Check the refrigerant level.
Refer to .

Q: Is the refrigerant level correct?
YES : Go to Step 8.
NO : Correct the refrigerant level (Refer to On-vehicle Service).

STEP 8. Replace the A/C-ECU, and then recheck the trouble symptom
Check that the compressor works normally.

Q: Is the check result normal?
YES : This diagnosis is complete.
NO : Replace the engine-ECU, and then register the ID code (Refer to GROUP 42B Troubleshooting – ID code registration judgement table <Vehicles with KOS> or GROUP 42C Troubleshooting – ID code registration judgement table <Vehicles without KOS>).

STEP 9. Connector check: A-14X A/C compressor relay connector

Q: Is the check result normal?
YES : Go to Step 10.
NO : Repair the connector.

STEP 10. Check the A/C compressor relay
Refer to .

Q: Is the check result normal?
YES : Go to Step 11.
NO : Replace the A/C compressor relay.

STEP 11. Voltage measurement at A-14X A/C compressor relay connector.
(1) Remove the relay, and measure at the relay block side.
(2) Voltage between terminal 2, 4 and body earth.

OK: System voltage

Q: Is the check result normal?
YES : Go to Step 13.
NO : Go to Step 12.

STEP 12. Check the wiring harness between A-14X A/C compressor relay connector terminal No.2, 4 and the fusible link (36).
- Check the A/C compressor relay power supply line for open circuit.

Q: Is the check result normal?
YES : The trouble can be an intermittent malfunction (Refer to GROUP 00, How to Cope with Intermittent Malfunction).
NO : Repair the wiring harness.

STEP 13. Check the wiring harness between A-14X A/C compressor relay connector terminal No.3 and B-113 A/C compressor assembly connector terminal No.1.
- Check the A/C compressor power supply line for open circuit.

NOTE: Prior to the wiring harness inspection, check intermediate connectors A-11 and repair if necessary.

Q: Is the check result normal?
YES : Go to Step 14.
NO : Repair the wiring harness.

STEP 14. Check the wiring harness between A-14X A/C compressor relay connector terminal No.1 and B-09 engine-ECU connector terminal No.102.
- Check the A/C compressor relay power supply line for open circuit.

Q: Is the check result normal?
YES : The trouble can be an intermittent malfunction (Refer to GROUP 00, How to Cope with Intermittent Malfunction).
NO : Repair the wiring harness.

www.cargeek.ir

www.CarGeek.ir

INSPECTION PROCEDURE 7: The A/C compressor does not work <Diesel engine>

A/C Compressor Assembly Circuit <Diesel engine>

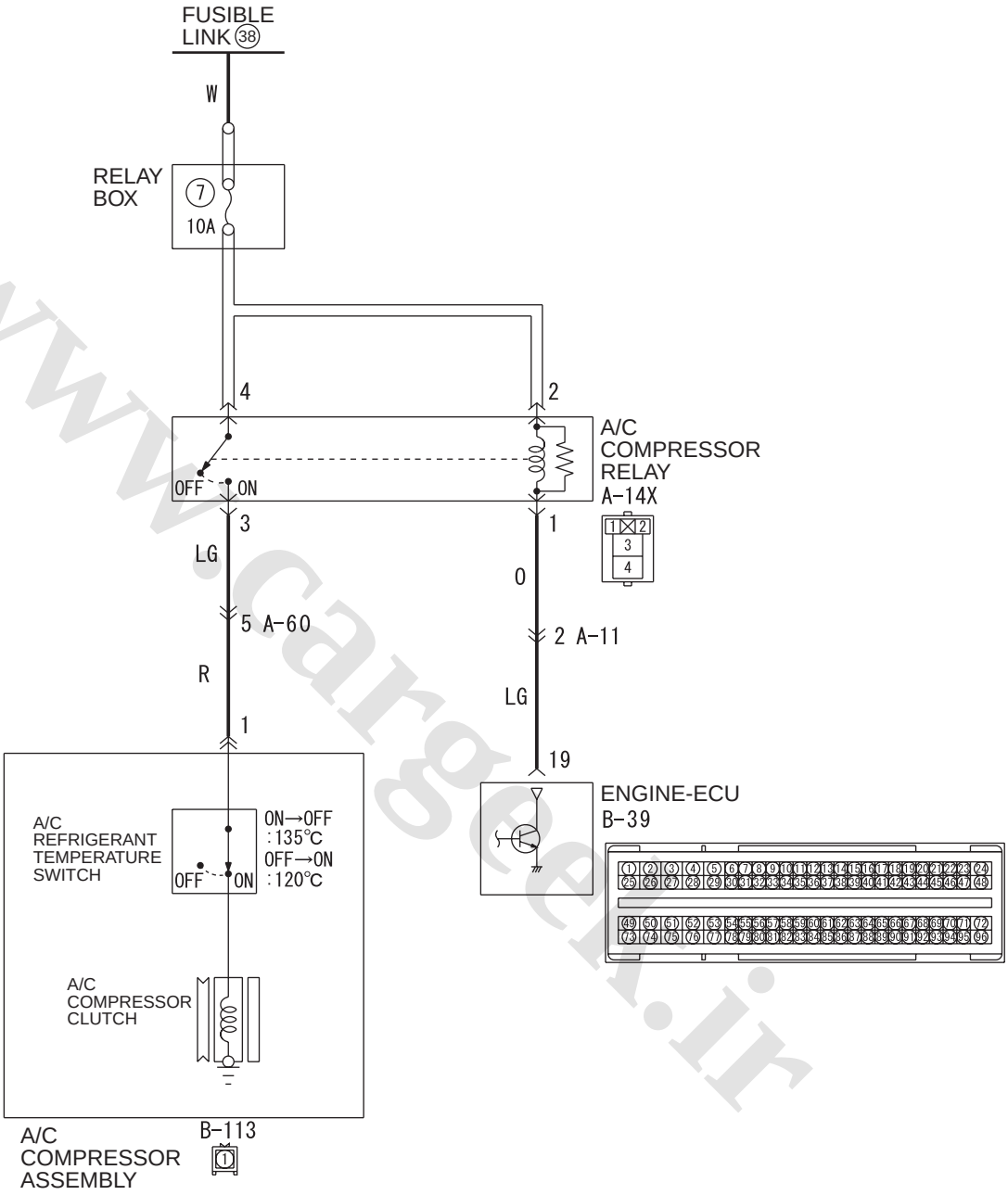

Wire colour code
B : Black LG : Light green G : Green L : Blue W : White Y : Yellow SB : Sky blue
BR : Brown O : Orange GR : Grey R : Red P : Pink V : Violet PU : Purple SI : Silver

ACB02704
W8G55E003A

www.cargeek.ir

www.CarGeek.ir

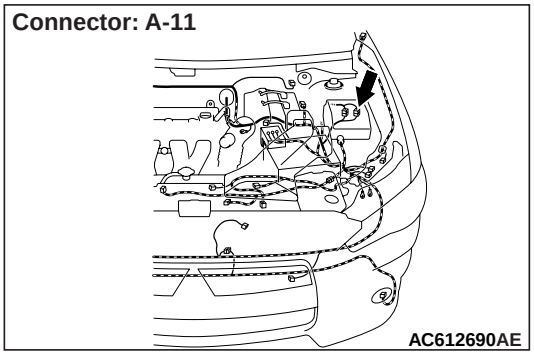

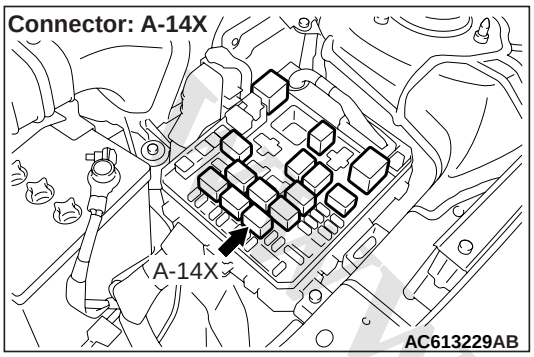

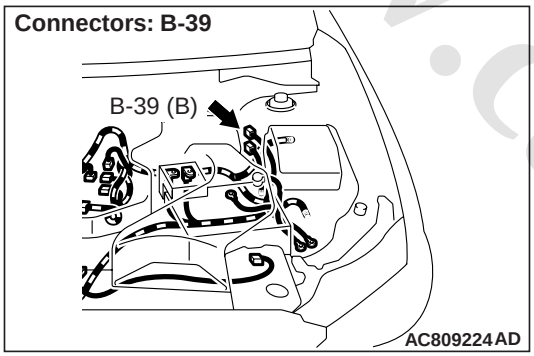

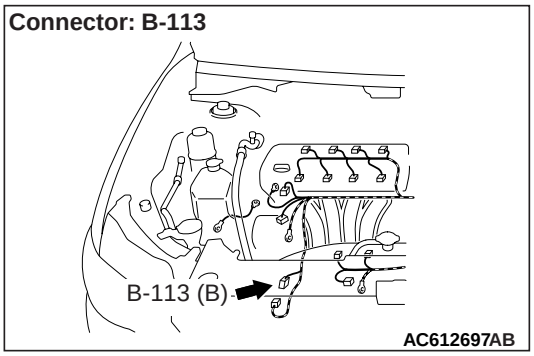

COMMENTS ON TROUBLE SYMPTOM

When the A/C compressor does not work, the A/C compressor circuit system may be defective.

PROBABLE CAUSES

- Malfunction of the A/C compressor
- Malfunction of the A/C compressor relay
- Damaged harness wires or connectors
- Malfunction of the engine-ECU

DIAGNOSIS PROCEDURE

STEP 1. M.U.T.-III CAN bus diagnostics

Use the M.U.T.-III to diagnose the CAN bus lines.

Q: Is the check result normal?
YES : Go to Step 2.
NO : Repair the CAN bus lines. (Refer to GROUP 54C – Troubleshooting).

STEP 2. M.U.T.-III diagnosis code

Check whether the A/C sets a diagnosis code or not.

Q: Is the check result normal?
YES : Go to Step 3.
NO : Refer to diagnosis code chart .

STEP 3. Connector check: B-113 A/C compressor assembly connector and B-39 engine-ECU connector

Q: Is the check result normal?
YES : Go to Step 4.
NO : Repair the connector.

STEP 4. Voltage measurement at B-113 A/C compressor assembly connector.

(1) Disconnect the connector, and measure at the wiring harness side.
(2) Turn the ignition switch to the "ON" position.
(3) Disconnect engine-ECU connector B-39 and earth terminal 19.
(4) Voltage between terminal 1 and body earth.

OK: System voltage

Q: Is the check result normal?
YES : Go to Step 5.
NO : Go to Step 9.

STEP 5. Check the A/C compressor.

Refer to .

Q: Is the check result normal?
YES : Go to Step 6.
NO : Replace the A/C compressor.

STEP 6. Check the refrigerant temperature switch.

Refer to .

Q: Is the refrigerant temperature switch operating properly?
YES : Go to Step 7.
NO : Replace the refrigerant temperature switch.

www.cargeek.ir

www.CarGeek.ir

STEP 7. Check the refrigerant level.
Refer to .

Q: Is the refrigerant level correct?
YES : Go to Step 8.
NO : Correct the refrigerant level (Refer to On-vehicle Service).

STEP 8. Replace the A/C-ECU, and then recheck the trouble symptom
Check that the compressor works normally.

Q: Is the check result normal?
YES : This diagnosis is complete.
NO : Replace the engine-ECU, and then register the ID code (Refer to GROUP 42B Troubleshooting – ID code registration judgement table <Vehicles with KOS> or GROUP 42C Troubleshooting – ID code registration judgement table <Vehicles without KOS>).

STEP 9. Connector check: A-14X A/C compressor relay connector

Q: Is the check result normal?
YES : Go to Step 10.
NO : Repair the connector.

STEP 10. Check the A/C compressor relay
Refer to .

Q: Is the check result normal?
YES : Go to Step 11.
NO : Replace the A/C compressor relay.

STEP 11. Voltage measurement at A-14X A/C compressor relay connector.
(1) Remove the relay, and measure at the relay block side.
(2) Voltage between terminal 2, 4 and body earth.

OK: System voltage

Q: Is the check result normal?
YES : Go to Step 13.
NO : Go to Step 12.

STEP 12. Check the wiring harness between A-14X A/C compressor relay connector terminal No.2, 4 and the fusible link (38).
- Check the A/C compressor relay power supply line for open circuit.

Q: Is the check result normal?
YES : The trouble can be an intermittent malfunction (Refer to GROUP 00, How to Cope with Intermittent Malfunction).
NO : Repair the wiring harness.

STEP 13. Check the wiring harness between A-14X A/C compressor relay connector terminal No.3 and B-113 A/C compressor assembly connector terminal No.1.
- Check the A/C compressor power supply line for open circuit.

NOTE: Prior to the wiring harness inspection, check intermediate connectors A-60, and repair if necessary.

Q: Is the check result normal?
YES : Go to Step 14.
NO : Repair the wiring harness.

STEP 14. Check the wiring harness between A-14X A/C compressor relay connector terminal No.1 and B-39 engine-ECU connector terminal No.19.
- Check the A/C compressor relay power supply line for open circuit.

NOTE: Prior to the wiring harness inspection, check intermediate connectors A-11, and repair if necessary.

Q: Is the check result normal?
YES : The trouble can be an intermittent malfunction (Refer to GROUP 00, How to Cope with Intermittent Malfunction).
NO : Repair the wiring harness.

INSPECTION PROCEDURE 8: The A/C indicator flashes

COMMENTS ON TROUBLE SYMPTOM
If the A/C indicator flashes, diagnosis code B1079 will be set (Refer to).

www.cargeek.ir

www.CarGeek.ir

INSPECTION PROCEDURE 9: A/C outlet air temperature cannot be set

Air Mixing Damper Control Motor Circuit

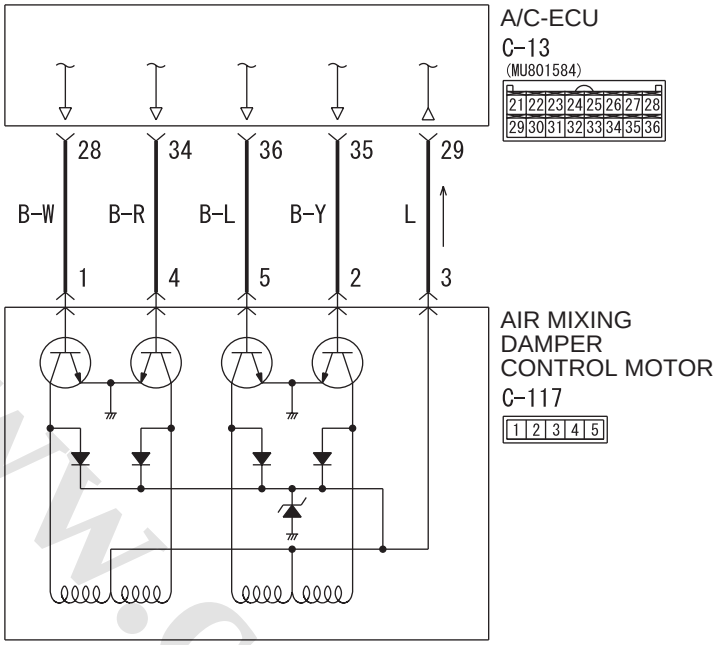

Wire colour code
B : Black LG : Light green G : Green L : Blue W : White Y : Yellow SB : Sky blue
BR : Brown O : Orange GR : Grey R : Red P : Pink V : Violet PU : Purple SI : Silver

W8G55X005A

Connectors: C-13, C-117 <LHD>

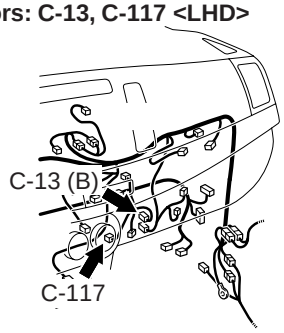

AC612706AI

Connectors: C-13, C-117 <RHD>

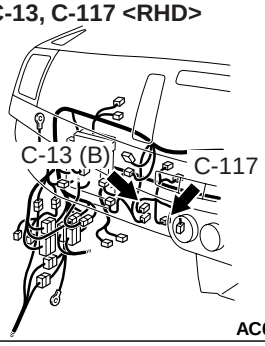

AC612710AW

COMMENTS ON TROUBLE SYMPTOM

If the air conditioner outlet temperature cannot be adjusted, the air mixing damper control motor or the A/C-ECU may be faulty.

NOTE: It cannot be adjusted while the engine coolant temperature is low.

PROBABLE CAUSES

- Malfunction of the air mix damper control motor
- Malfunction of the A/C-ECU

DIAGNOSTIC PROCEDURE

STEP 1. Check the compressor operation

Check that the compressor operates under the following conditions.

- Engine operation
- Air volume control dial: Maximum
- Air conditioner switch: ON
- Temperature control dial: MAX COOL

Q: Is the check result normal?

YES : Go to Step 2.

NO : Refer to INSPECTION PROCEDURE 6: "The A/C compressor does not work <Petrol engine>", INSPECTION PROCEDURE 7: "The A/C compressor does not work <Diesel engine>".

www.cargeek.ir

www.CarGeek.ir

STEP 2. M.U.T.-III diagnosis code
Check that the diagnosis code related to the air conditioner is not set.

Q: Is the diagnosis code set?
YES : Carry out the diagnosis code procedures. Refer to .
NO : Go to Step 3.

STEP 3. M.U.T.-III actuator test
Carry out the actuator test. (Refer to).
- Item 06: air mixing damper control motor (Select "position reset").

Q: Is the check result normal?
YES : This diagnosis is complete.
NO : Go to Step 4.

STEP 4. Connector check: C-117 air mixing damper control motor connector, C-13 A/C-ECU connector

Q: Is the check result normal?
YES : Go to Step 5.
NO : Repair the connector concerned.

STEP 5. Check the wiring harness wires between C-117 air mixing damper control motor connector (terminals 3, 2, 5, 4 and 1) and C-13 A/C-ECU connector (terminals 29, 35, 36, 34 and 28).
- Check the input line for open circuit.

Q: Is the check result normal?
YES : Go to Step 6.
NO : Repair the wiring harness.

STEP 6. Replace the air mixing damper control motor, and recheck the trouble symptom.
Check that A/C outlet air temperature can be adjusted.

NOTE: Whenever the motor is replaced, initialise the motor position by using the Actuator Test.

Q: Is the check result normal?
YES : This diagnosis is complete.
NO : Replace the A/C-ECU.

INSPECTION PROCEDURE 10: Air outlets changeover is impossible.

Mode Selection Damper Control Motor Circuit

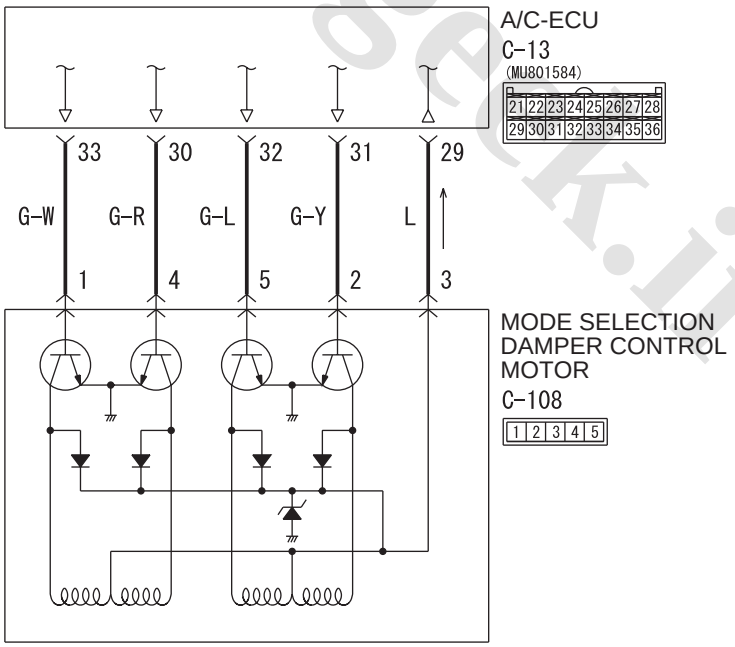

Wire colour code
B : Black LG : Light green G : Green L : Blue W : White Y : Yellow SB : Sky blue
BR : Brown O : Orange GR : Grey R : Red P : Pink V : Violet PU : Purple SI : Silver

W8G55X006A

www.cargeek.ir

www.CarGeek.ir

Connectors: C-13, C-108 <LHD>

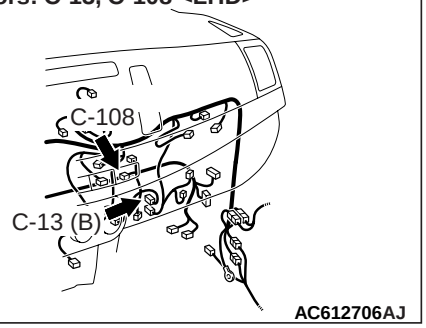

Connectors: C-13, C-108 <RHD>

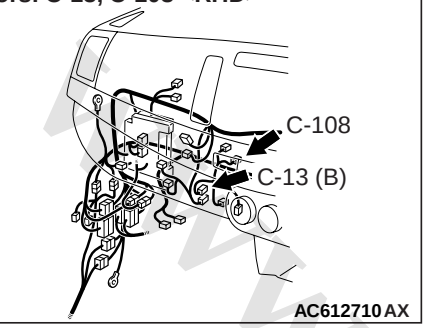

COMMENTS ON TROUBLE SYMPTOM

If the air conditioner outlets changeover is impossible, the mode selection damper control motor or the A/C-ECU may be faulty.

PROBABLE CAUSES

- Malfunction of the mode selection damper control motor
- Malfunction of the A/C-ECU

DIAGNOSTIC PROCEDURE

STEP 1. M.U.T.-III diagnosis code

Check that the diagnosis code related to the air conditioner is not set.

Q: Is the diagnosis code set?

YES : Carry out the diagnosis code procedures. Refer to .
NO : Go to Step 2.

STEP 2. M.U.T.-III actuator test

Carry out the actuator test. (Refer to).

- Item 08: Air outlet c/o damper: (Select "position reset".)

Q: Is the check result normal?

YES : This diagnosis is complete.
NO : Go to Step 3.

STEP 3. Connector check: C-108 mode selection damper control motor connector and C-13 A/C-ECU connector

Q: Is the check result normal?

YES : Go to Step 4.
NO : Repair the connector concerned.

STEP 4. Check the wiring harness wires between C-108 mode selection damper control motor connector (terminals 1, 4, 5, 2 and 3) and C-13 A/C-ECU connector (terminals 33, 30, 32, 31 and 29).

- Check the input line for open circuit.

Q: Is the check result normal?

YES : Go to Step 5.
NO : Repair the wiring harness.

STEP 5. Replace the mode selection damper control motor, and recheck the trouble symptom.

Check that the air outlets can be changed.

NOTE: Whenever the motor is replaced, initialise the motor position by using the Actuator Test.

Q: Is the check result normal?

YES : This diagnosis is complete.
NO : Replace the A/C-ECU.

www.cargeek.ir

www.CarGeek.ir

INSPECTION PROCEDURE 11: A/C pressure sensor system

A/C Pressure Sensor Circuit

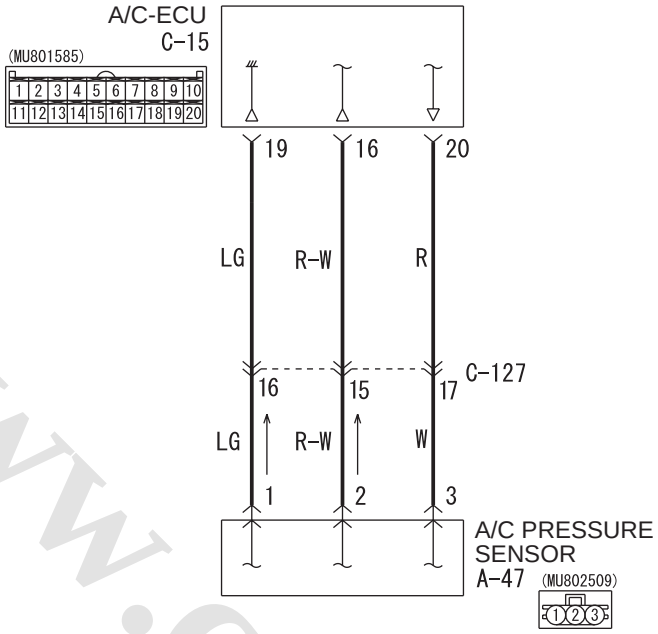

Wire colour code
B : Black LG : Light green G : Green L : Blue W : White Y : Yellow SB : Sky blue
BR : Brown O : Orange GR : Grey R : Red P : Pink V : Violet PU : Purple SI : Silver

ACB02625
W8G55X007A

Connector: A-47

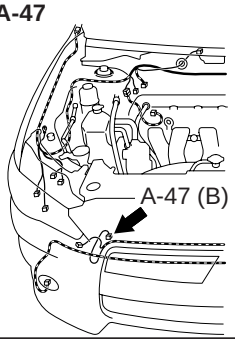

AC612691AE

Connector: C-127 <LHD>

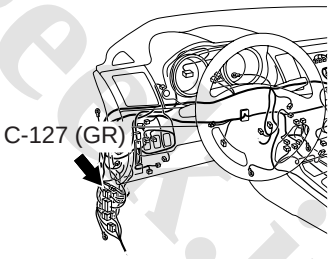

ACB02645AB

Connector: C-15 <LHD>

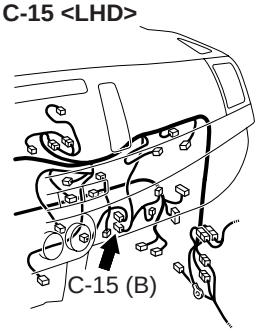

AC612706AK

Connectors: C-15, C-127 <RHD>

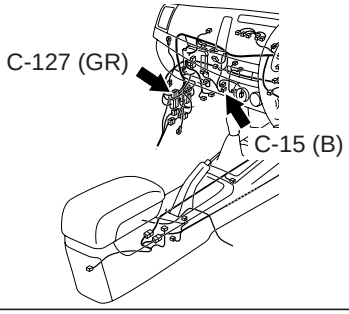

ACB02648AB

COMMENTS ON TROUBLE SYMPTOM

If the A/C pressure sensor system is defective, the wiring harness between the A/C pressure sensor and the A/C-ECU is suspected.

www.cargeek.ir

www.CarGeek.ir

PROBABLE CAUSES

- Malfunction of the A/C pressure sensor
- Malfunction of the A/C-ECU
- Damaged wiring harness or connectors

DIAGNOSTIC PROCEDURE

STEP 1. Connector check: A-47 A/C pressure sensor connector

Q: Is the check result normal?
YES : Go to Step 2.
NO : Repair the connector concerned.

STEP 2. Inspection of the A/C pressure sensor
Refer to .

Q: Is the A/C pressure sensor normal?
YES : Go to Step 3.
NO : Replace the A/C pressure sensor.

STEP 3. Connector check: C-15 A/C-ECU connector

Q: Is the check result normal?
YES : Go to Step 4.
NO : Repair the connector concerned.

STEP 4. Check the wiring harness wires between A-47 A/C pressure sensor connector (terminals 3, 2 and 1) and C-15 A/C-ECU connector (terminals 20, 16 and 19).

- Check the input line for open circuit.

NOTE: Prior to the wiring harness inspection, intermediate connector C-127, and repair if necessary.

Q: Is the check result normal?
YES : Go to Step 5.
NO : Repair the wiring harness.

STEP 5. Retest the system.

Q: Is the check result normal?
YES : Intermittent malfunction (Refer to GROUP 00 – How to Use Troubleshooting/ Inspection Service Points - How to Cope with Intermittent Malfunction).
NO : Replace the A/C-ECU.

www.cargeek.ir

www.CarGeek.ir

INSPECTION PROCEDURE 12: Blower motor power supply system

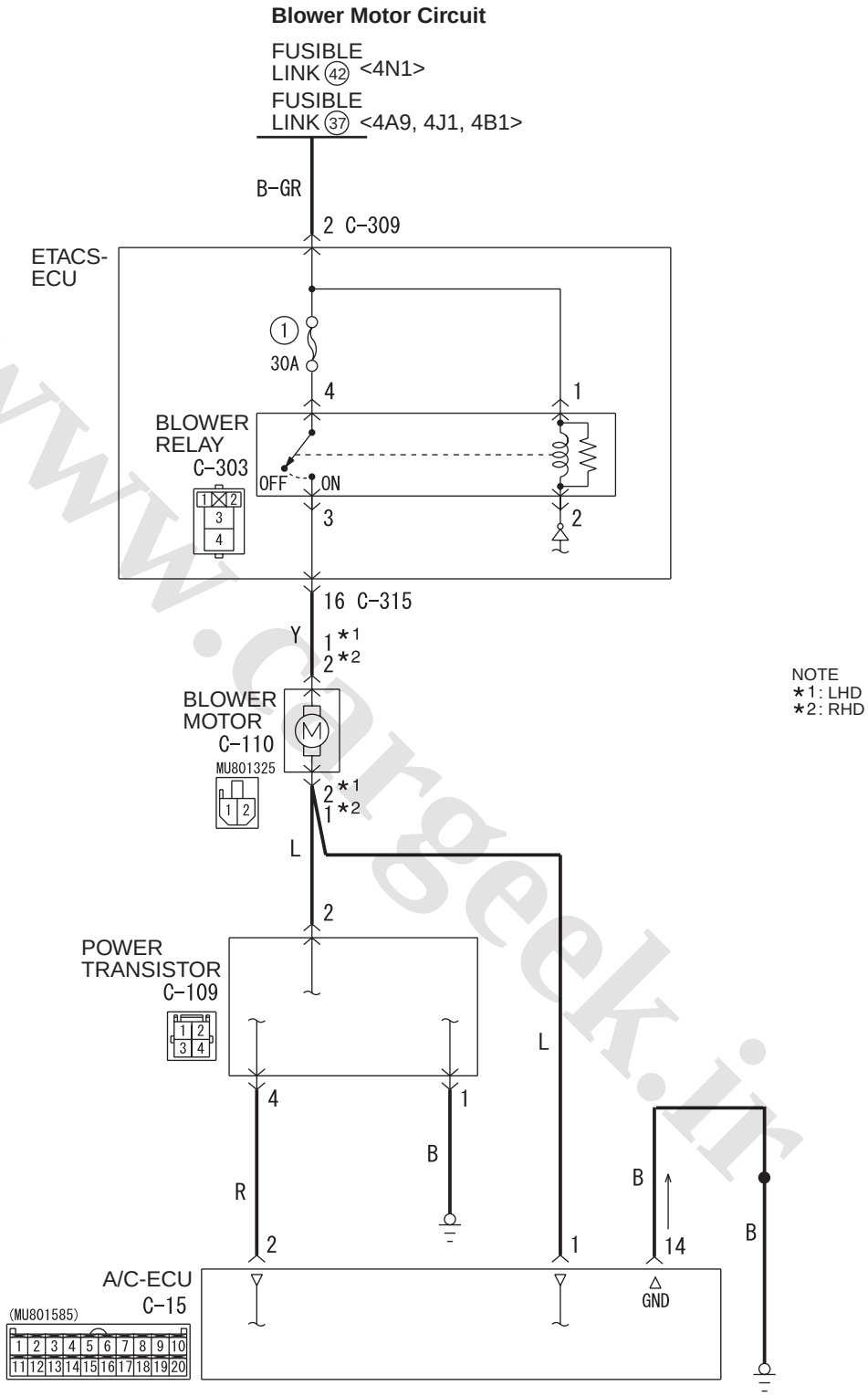

Wire colour code
B : Black LG : Light green G : Green L : Blue W : White Y : Yellow SB : Sky blue
BR : Brown O : Orange GR : Grey R : Red P : Pink V : Violet PU : Purple SI : Silver

ACB02688
W8G55X008A

www.cargeek.ir

www.CarGeek.ir

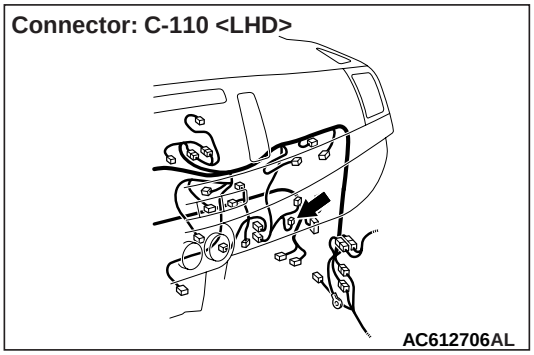

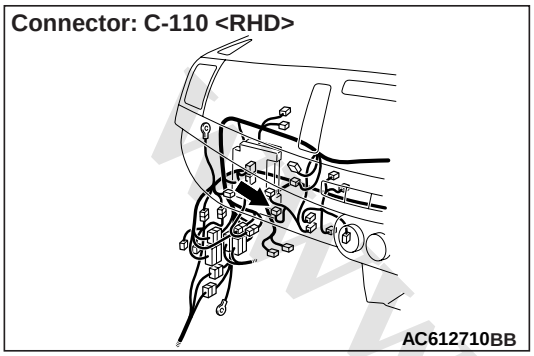

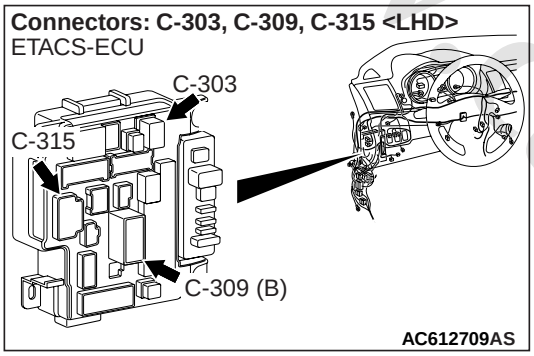

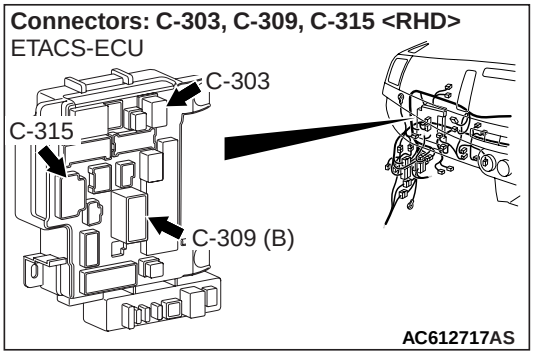

COMMENTS ON TROUBLE SYMPTOM

If the blower motor is not energised, the blower relay system is suspected.

PROBABLE CAUSES

- Malfunction of the blower relay
- Damaged wiring harness or connectors
- Malfunction of the ETACS-ECU

DIAGNOSTIC PROCEDURE

STEP 1. Connector check: C-303 blower relay connector

Q: Is the check result normal?
YES : Go to Step 2.
NO : Repair the connector concerned.

STEP 2. Measure the voltage at C-303 blower relay connector.

(1) Remove the relay, and measure at the junction block side.
(2) Voltage between terminals 1, 4 and body earth

OK: System voltage

Q: Is the check result normal?
YES : Go to Step 4.
NO : Go to Step 3.

STEP 3. Check the wiring harness between C-303 blower relay connector terminal No. 4, 1 and fusible link (37) <Petrol engine> or fusible link (42) <Diesel engine>.

- Check the power supply line for open circuit.

NOTE: Prior to the wiring harness inspection, check ETACS-ECU connector C-309, and repair if necessary.

Q: Is the check result normal?
YES : Intermittent malfunction (Refer to GROUP 00 – How to Use Troubleshooting/ Inspection Service Points - How to Cope with Intermittent Malfunction).
NO : Repair the wiring harness.

STEP 4. Connector check: C-110 blower motor connector

Q: Is the check result normal?
YES : Go to Step 5.
NO : Repair the connector concerned.

STEP 5. Check the wiring harness between C-110 blower motor connector terminal No. 1 <LHD> or 2 <RHD> and C-303 blower relay connector terminal No. 3.

NOTE: Prior to the wiring harness inspection, check junction block connector C-315, and repair if necessary.

Q: Is the check result normal?
YES : Go to Step 6.
NO : Repair the wiring harness.

www.cargeek.ir

www.CarGeek.ir

STEP 6. Retest the system.

Check that the blower motor is energised.

Q: Is the check result normal?

YES : Intermittent malfunction (Refer to GROUP 00 – How to Use Troubleshooting/ Inspection Service Points - How to Cope with Intermittent Malfunction).

NO : Replace the ETACS-ECU.

www.cargeek.ir

www.cargeek.ir

www.CarGeek.ir

INSPECTION PROCEDURE 13: A/C-ECU power supply system

A/C-ECU Power Source Circuit

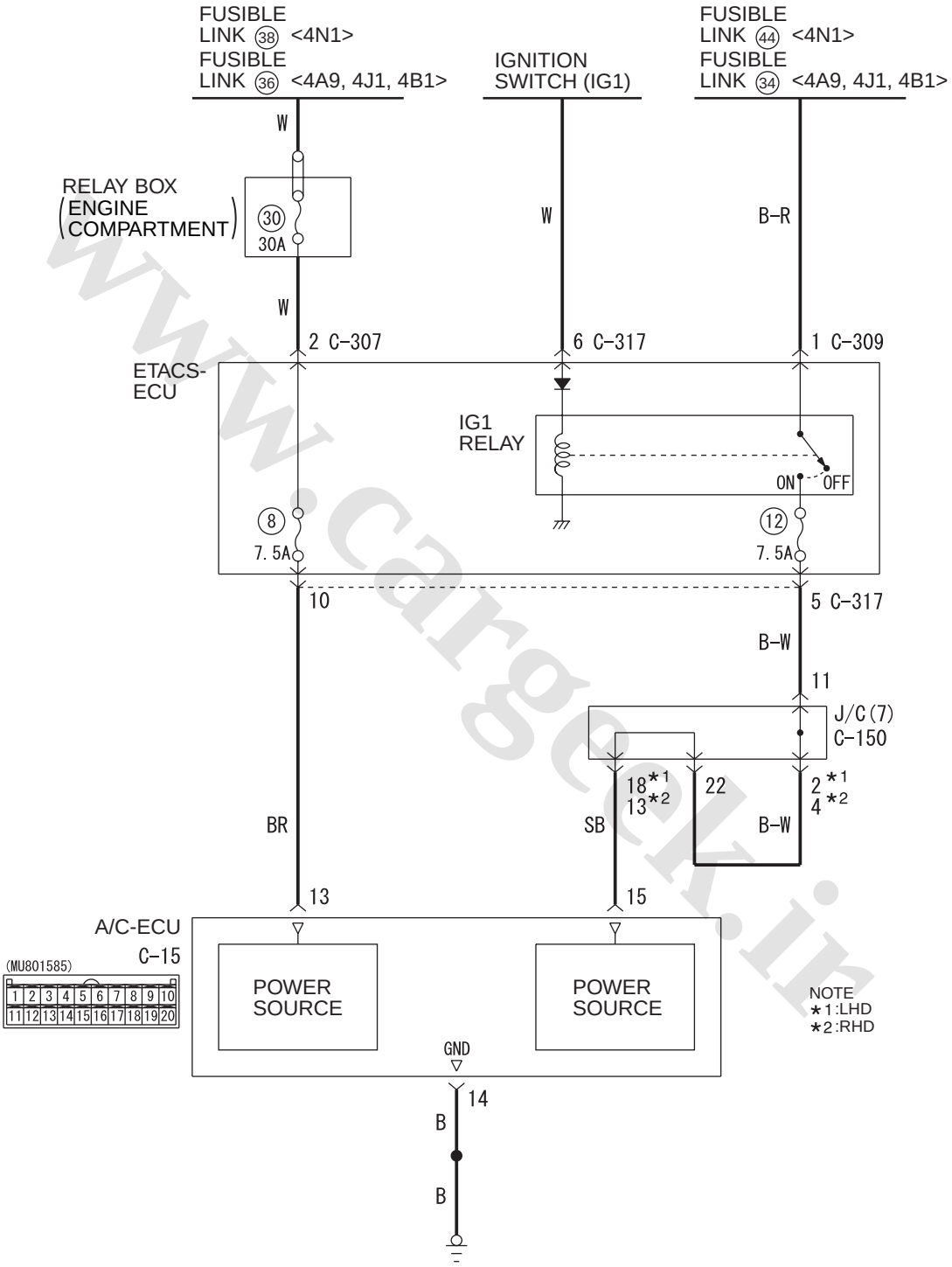

Wire colour code
B : Black LG : Light green G : Green L : Blue W : White Y : Yellow SB : Sky blue
BR : Brown O : Orange GR : Grey R : Red P : Pink V : Violet PU : Purple SI : Silver

ACB02703
WBH55E001A

www.cargeek.ir

www.CarGeek.ir

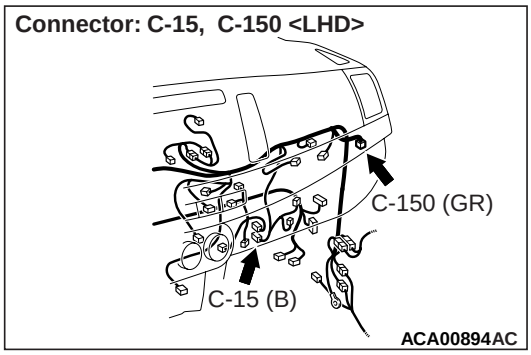

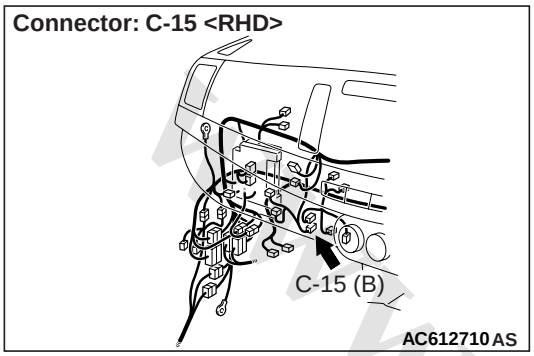

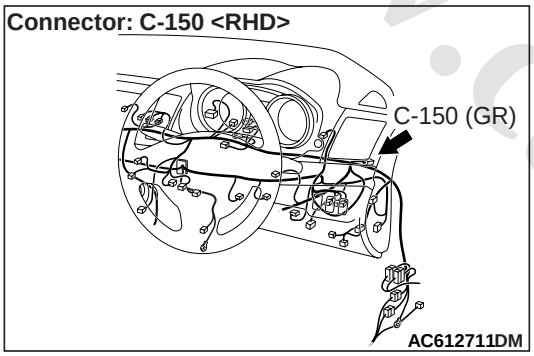

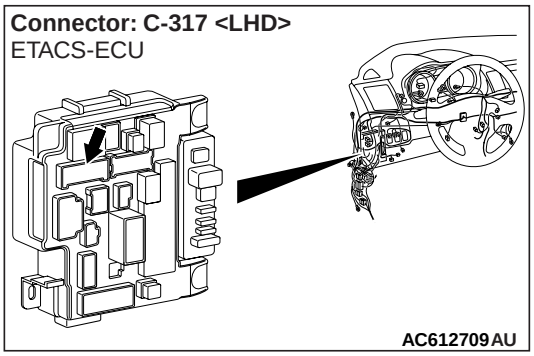

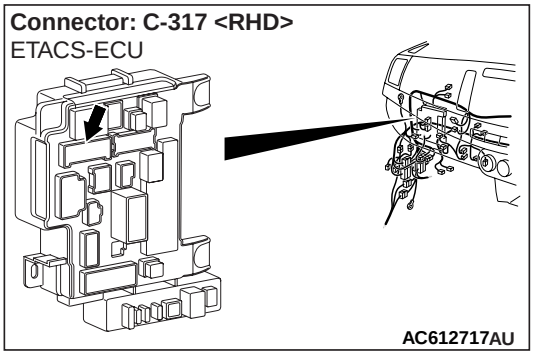

COMMENTS ON TROUBLE SYMPTOM

If the A/C-ECU is not energised, the power supply or earth system to the ECU may be defective.

PROBABLE CAUSES

- Malfunction of the A/C-ECU
- Damaged wiring harness or connectors

DIAGNOSTIC PROCEDURE

STEP 1. M.U.T.-III other system's diagnosis code

Check that the ETACS-ECU has not set a diagnosis code.

Q: Is the diagnosis code set?

YES : Carry out the diagnosis code procedures . Refer to GROUP 54A, ETACS-ECU .

NO : Go to Step 2.

STEP 2. Connector check: C-15 A/C-ECU connector

Q: Is the check result normal?

YES : Go to Step 3.

NO : Repair the connector concerned.

STEP 3. Measure the voltage at the C-15 A/C-ECU connector.

(1) Disconnect the connector, and measure at the wiring harness side.
(2) Ignition switch: ON
(3) Voltage between terminal No. 15 and body earth

OK: System voltage

Q: Is the check result normal?

YES : Go to Step 6.

NO : Go to Step 4.

STEP 4. Connector check: C-317 ETACS-ECU connector

Q: Is the check result normal?

YES : Go to Step 5.

NO : Repair the connector concerned.

STEP 5. Check the wiring harness between C-15 A/C-ECU connector terminal No. 15 and C-317 ETACS-ECU connector terminal No. 5.

- Check the power supply line for open circuit.

NOTE: Prior to the wiring harness inspection, check joint connector C-150, and repair if necessary.

Q: Is the check result normal?

www.cargeek.ir

www.CarGeek.ir

YES : Intermittent malfunction (Refer to GROUP 00 – How to Use Troubleshooting/ Inspection Service Points - How to Cope with Intermittent Malfunction).
NO : Repair the wiring harness.

STEP 6. Measure the voltage at the C-15 A/C-ECU connector.
(1) Disconnect the connector, and measure at the wiring harness side.
(2) Voltage between terminal No. 13 and body earth

OK: System voltage

Q: Is the check result normal?
YES : Go to Step 8.
NO : Go to Step 7.

STEP 7. Check the wiring harness between C-15 A/C-ECU connector terminal No. 13 and C-317 ETACS-ECU connector terminal No. 10.
- Check the power supply line for open circuit.

Q: Is the check result normal?
YES : Intermittent malfunction (Refer to GROUP 00 – How to Use Troubleshooting/ Inspection Service Points - How to Cope with Intermittent Malfunction).
NO : Repair the wiring harness.

STEP 8. Measure the resistance at the C-15 A/C-ECU connector.
(1) Disconnect the connector, and measure at the wiring harness side.
(2) Resistance between terminal No. 14 and body earth

OK: Continuity exists (2 Ω or less)

Q: Is the check result normal?
YES : Replace the A/C-ECU.
NO : Go to Step 9.

STEP 9. Check the wiring harness between C-15 A/C-ECU connector terminal No. 14 and body earth.
- Check the earth wires for open circuit.

Q: Is the check result normal?
YES : Intermittent malfunction (Refer to GROUP 00 – How to Use Troubleshooting/ Inspection Service Points - How to Cope with Intermittent Malfunction).
NO : Repair the wiring harness.

www.cargeek.ir

www.CarGeek.ir

INSPECTION PROCEDURE 14: The PTC heater does not work. <Vehicles with PTC heater>

PTC Heater Circuit

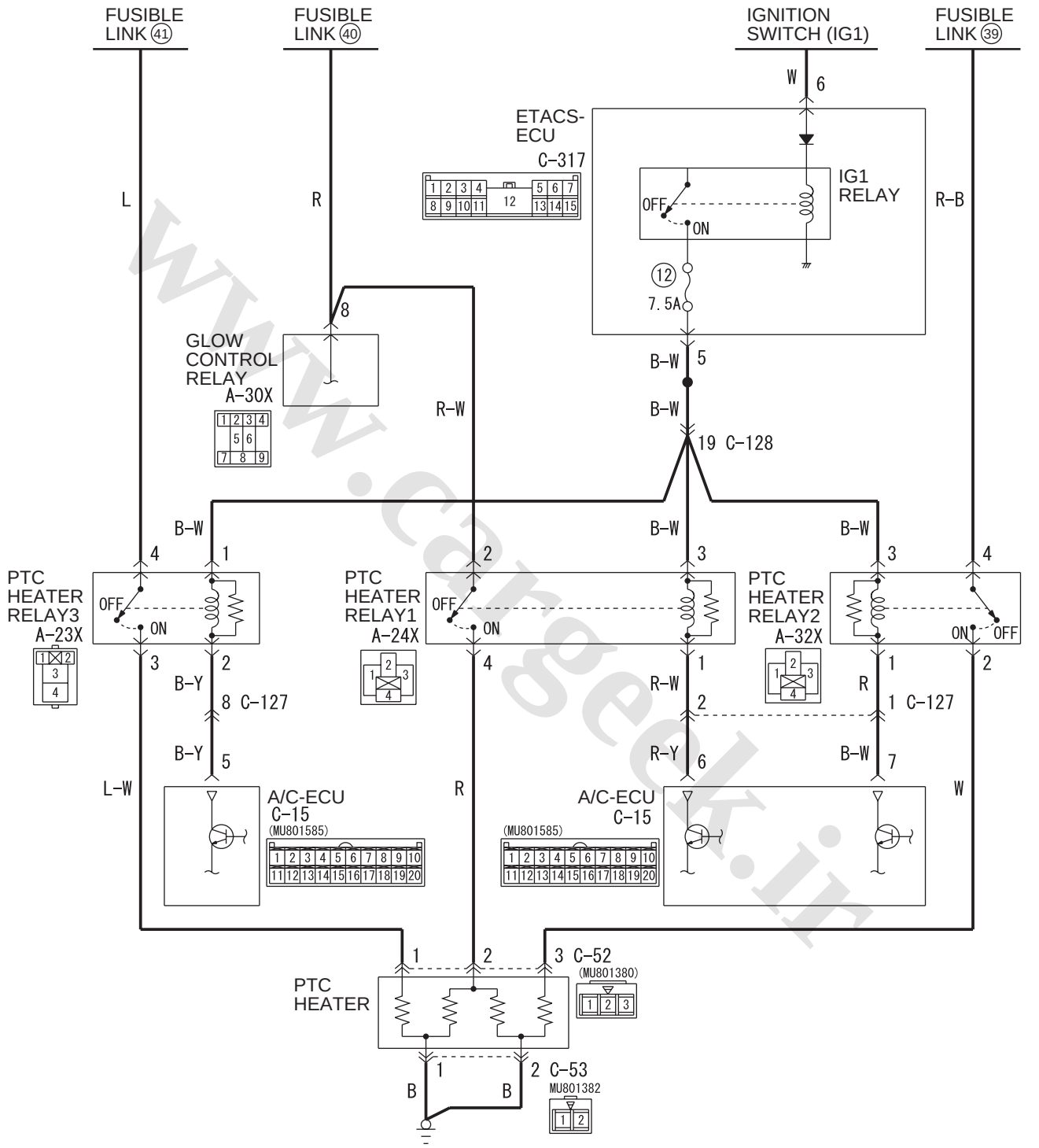

Wire colour code
B : Black LG : Light green G : Green L : Blue W : White Y : Yellow SB : Sky blue
BR : Brown O : Orange GR : Grey R : Red P : Pink V : Violet PU : Purple SI : Silver

W8G55E007A

www.cargeek.ir

www.CarGeek.ir

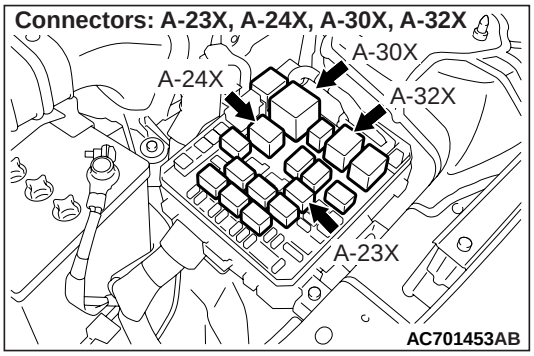

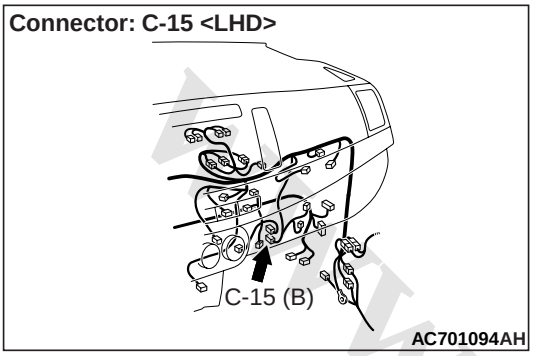

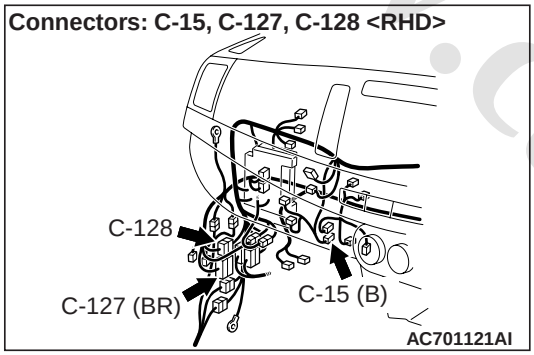

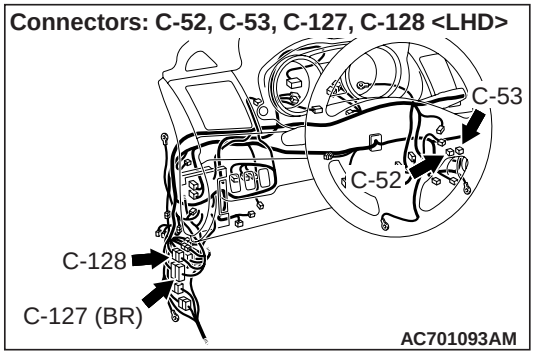

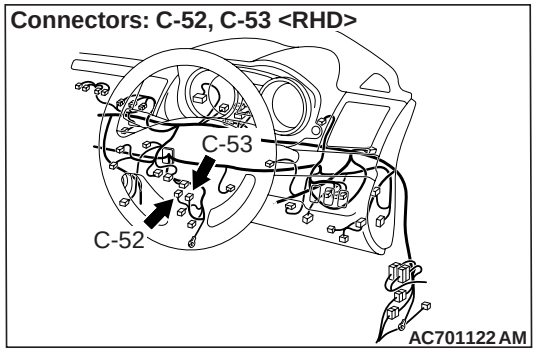

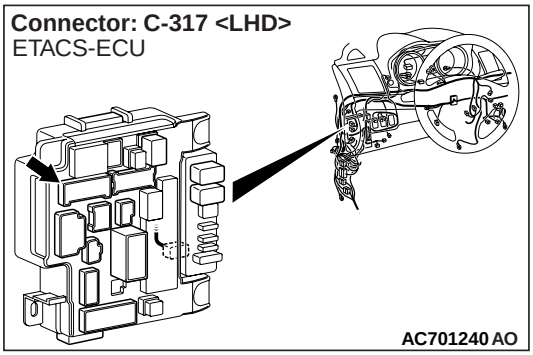

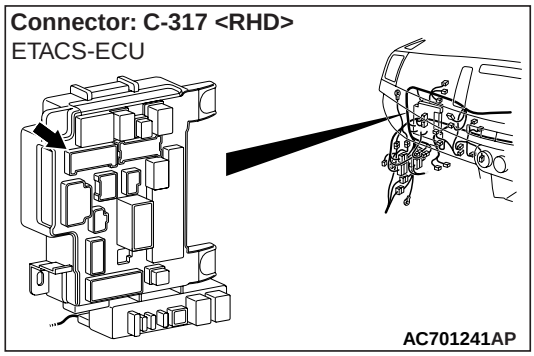

COMMENTS ON TROUBLE SYMPTOM

If the PTC heater does not work when the following conditions are met, the PTC heater, PTC heater relay, A/C-ECU, or wiring harness, connector(s) may be defective.

- Blower knob: Other than OFF
- The engine is running.
- The engine coolant temperature is 77°C or lower.
- Temperature adjustment knob: MAX HOT
- During low-electric load conditions

PROBABLE CAUSES

- Malfunction of the PTC heater
- Malfunction of the PTC heater relay1
- Malfunction of the PTC heater relay2
- Malfunction of the PTC heater relay3
- Damaged wiring harness or connectors
- Malfunction of the A/C-ECU

DIAGNOSTIC PROCEDURE

STEP 1. M.U.T.-III diagnosis code

Check that the air conditioner has not set a diagnosis code.

Q: Is the diagnosis code set?

YES : Carry out the diagnosis code procedures. Refer to .

NO : Go to Step 2.

www.cargeek.ir

www.CarGeek.ir

STEP 2. M.U.T.-III other system's diagnosis code
Check that the ETACS-ECU has not set a diagnosis code.

Q: Is the diagnosis code set?
YES : Carry out the diagnosis code procedures. Refer to GROUP 54A, ETACS-ECU .
NO : Go to Step 3.

STEP 3. Connector check: A-24X PTC heater relay1 connector, A-32X PTC heater relay2 connector and A-23X PTC heater relay3 connector

Q: Is the check result normal?
YES : Go to Step 4.
NO : Repair the connector concerned.

STEP 4. Check the PTC heater relay1, 2 and 3.
Refer to .

Q: Is the check result normal?
YES : Go to Step 5.
NO : Replace the PTC heater relay1, 2 or 3.

STEP 5. Connector check: C-52 PTC heater connector and C-15 A/C-ECU connector

Q: Is the check result normal?
YES : Go to Step 6.
NO : Repair the connector concerned.

STEP 6. Measure the voltage at C-52 PTC heater connector.
(1) Disconnect the connector, and measure at the wiring harness side.
(2) Ignition switch: ON
(3) Disconnect A/C-ECU connector C-15 and earth terminal 6.
(4) Voltage between terminal 2 and body earth

OK: System voltage

Q: Is the check result normal?
YES : Go to Step 13.
NO : Go to Step 7.

STEP 7. Measure the voltage at A-24X PTC heater relay1 connector.
(1) Remove the relay, and measure at the relay side.
(2) Voltage between terminal 2 and body earth

OK: System voltage

Q: Is the check result normal?
YES : Go to Step 9.
NO : Go to Step 8.

STEP 8. Check the wiring harness between A-24X PTC heater relay1 connector terminal No. 2 and fusible link (40) connector.
NOTE: Prior to the wiring harness inspection, check glow control relay connector A-30X, and repair if necessary.
- Check the power supply line for open circuit.

Q: Is the check result normal?
YES : Intermittent malfunction (Refer to GROUP 00 – How to Use Troubleshooting/ Inspection Service Points - How to Cope with Intermittent Malfunction).
NO : Repair the wiring harness.

STEP 9. Measure the voltage at A-24X PTC heater relay1 connector.
(1) Remove the relay, and measure at the relay side.
(2) Turn the ignition switch to the "ON" earth position.
(3) Voltage between terminal 3 and body earth

OK: System voltage

Q: Is the check result normal?
YES : Go to Step 11.
NO : Go to Step 10.

STEP 10. Check the wiring harness between A-24X PTC heater relay1 connector terminal No. 3 and C-317 ETACS-ECU connector terminal No. 5.
NOTE: Prior to the wiring harness inspection, check intermediate connector C-128, and repair if necessary.
- Check the power supply line for open circuit.

Q: Is the check result normal?
YES : Intermittent malfunction (Refer to GROUP 00 – How to Use Troubleshooting/ Inspection Service Points - How to Cope with Intermittent Malfunction).
NO : Repair the wiring harness.

STEP 11. Check the wiring harness wires between C-52 PTC heater connector terminal No. 2 and A-24X PTC heater relay1 connector terminal No. 4.
- Check the power supply line for open circuit.

Q: Is the check result normal?
YES : Go to Step 12.
NO : Repair the wiring harness.

www.cargeek.ir

www.CarGeek.ir

STEP 12. Check the wiring harness between A-24X PTC heater relay1 connector terminal No. 1 and C-15 A/C-ECU connector terminal No. 6.

NOTE: Prior to the wiring harness inspection, check intermediate connector C-127, and repair if necessary.

- Check the power supply line for open circuit.

Q: Is the check result normal?
YES : Intermittent malfunction (Refer to GROUP 00 – How to Use Troubleshooting/ Inspection Service Points - How to Cope with Intermittent Malfunction).
NO : Repair the wiring harness.

STEP 13. Measure the voltage at C-52 PTC heater connector.

(1) Disconnect the connector, and measure at the wiring harness side.
(2) Ignition switch: ON
(3) Disconnect A/C-ECU connector C-15 and earth terminal 7.
(4) Voltage between terminal 3 and body earth

OK: System voltage

Q: Is the check result normal?
YES : Go to Step 20.
NO : Go to Step 14.

STEP 14. Measure the voltage at A-32X PTC heater relay2 connector.

(1) Remove the relay, and measure at the relay side.
(2) Voltage between terminal 4 and body earth

OK: System voltage

Q: Is the check result normal?
YES : Go to Step 16.
NO : Go to Step 15.

STEP 15. Check the wiring harness between A-32X PTC heater relay2 connector terminal No. 4 and fusible link (39) connector.

- Check the power supply line for open circuit.

Q: Is the check result normal?
YES : Intermittent malfunction (Refer to GROUP 00 – How to Use Troubleshooting/ Inspection Service Points - How to Cope with Intermittent Malfunction).
NO : Repair the wiring harness.

STEP 16. Measure the voltage at A-32X PTC heater relay2 connector.

(1) Remove the relay, and measure at the relay side.
(2) Turn the ignition switch to the "ON" earth position.
(3) Voltage between terminal 3 and body earth

OK: System voltage

Q: Is the check result normal?
YES : Go to Step 18.
NO : Go to Step 17.

STEP 17. Check the wiring harness between A-32X PTC heater relay2 connector terminal No. 3 and C-317 ETACS-ECU connector terminal No. 5.

NOTE: Prior to the wiring harness inspection, check intermediate connector C-128, and repair if necessary.

- Check the power supply line for open circuit.

Q: Is the check result normal?
YES : Intermittent malfunction (Refer to GROUP 00 – How to Use Troubleshooting/ Inspection Service Points - How to Cope with Intermittent Malfunction).
NO : Repair the wiring harness.

STEP 18. Check the wiring harness wires between C-52 PTC heater connector terminal No. 3 and A-32X PTC heater relay2 connector terminal No. 2.

- Check the power supply line for open circuit.

Q: Is the check result normal?
YES : Go to Step 19.
NO : Repair the wiring harness.

STEP 19. Check the wiring harness between A-32X PTC heater relay2 connector terminal No. 1 and C-15 A/C-ECU connector terminal No. 7.

NOTE: Prior to the wiring harness inspection, check intermediate connector C-127, and repair if necessary.

- Check the power supply line for open circuit.

Q: Is the check result normal?
YES : Intermittent malfunction (Refer to GROUP 00 – How to Use Troubleshooting/ Inspection Service Points - How to Cope with Intermittent Malfunction).
NO : Repair the wiring harness.

STEP 20. Measure the voltage at C-52 PTC heater connector.

(1) Disconnect the connector, and measure at the wiring harness side.
(2) Ignition switch: ON
(3) Disconnect A/C-ECU connector C-15 and earth terminal 5.

www.cargeek.ir

www.CarGeek.ir

(4) Voltage between terminal 1 and body earth

OK: System voltage

Q: Is the check result normal?
YES : Go to Step 27.
NO : Go to Step 21.

STEP 21. Measure the voltage at A-23X PTC heater relay3 connector.
(1) Remove the relay, and measure at the relay side.
(2) Voltage between terminal 4 and body earth

OK: System voltage

Q: Is the check result normal?
YES : Go to Step 23.
NO : Go to Step 22.

STEP 22. Check the wiring harness between A-23X PTC heater relay3 connector terminal No. 4 and fusible link (41) connector.
- Check the power supply line for open circuit.

Q: Is the check result normal?
YES : Intermittent malfunction (Refer to GROUP 00 – How to Use Troubleshooting/ Inspection Service Points - How to Cope with Intermittent Malfunction).
NO : Repair the wiring harness.

STEP 23. Measure the voltage at A-23X PTC heater relay3 connector.
(1) Remove the relay, and measure at the relay side.
(2) Turn the ignition switch to the "ON" earth position.
(3) Voltage between terminal 1 and body earth

OK: System voltage

Q: Is the check result normal?
YES : Go to Step 25.
NO : Go to Step 24.

STEP 24. Check the wiring harness between A-23X PTC heater relay3 connector terminal No. 1 and C-317 ETACS-ECU connector terminal No. 5.

NOTE: Prior to the wiring harness inspection, check intermediate connector C-128, and repair if necessary.
- Check the power supply line for open circuit.

Q: Is the check result normal?
YES : Intermittent malfunction (Refer to GROUP 00 – How to Use Troubleshooting/ Inspection Service Points - How to Cope with Intermittent Malfunction).
NO : Repair the wiring harness.

STEP 25. Check the wiring harness wires between C-52 PTC heater connector terminal No. 1 and A-23X PTC heater relay3 connector terminal No. 3.
- Check the power supply line for open circuit.

Q: Is the check result normal?
YES : Go to Step 26.
NO : Repair the wiring harness.

STEP 26. Check the wiring harness between A-23X PTC heater relay3 connector terminal No. 2 and C-15 A/C-ECU connector terminal No. 5.

NOTE: Prior to the wiring harness inspection, check intermediate connector C-127, and repair if necessary.
- Check the power supply line for open circuit.

Q: Is the check result normal?
YES : Intermittent malfunction (Refer to GROUP 00 – How to Use Troubleshooting/ Inspection Service Points - How to Cope with Intermittent Malfunction).
NO : Repair the wiring harness.

STEP 27. Connector check: C-53 PTC heater connector

Q: Is the check result normal?
YES : Go to Step 28.
NO : Repair the connector.

STEP 28. Resistance measurement at C-53 PTC heater connector.
(1) Disconnect the connector, and measure at the wiring harness side.
(2) Continuity between terminal 1, 2 and body earth.

OK: Continuity (Less than 2 ohms)

Q: Is the check result normal?
YES : Go to Step 30.
NO : Go to Step 29.

STEP 29. Check the wiring harness between C-53 PTC heater connector (terminals 1 and 2) and body earth.
- Check the PTC heater earth line for open circuit.

Q: Is the check result normal?
YES : Intermittent malfunction (Refer to GROUP 00 – How to Use Troubleshooting/ Inspection Service Points - How to Cope with Intermittent Malfunction).
NO : Repair the wiring harness.

www.cargeek.ir

www.CarGeek.ir

STEP 30. Check the PTC heater.
Refer to .

Q: Is the check result normal?

YES : Replace the A/C-ECU.
NO : Replace the PTC heater.

DATA LIST REFERENCE TABLE

M1554005101032

Item No.	Check item	Inspection status	The display contents under normal condition
17	Engine speed	–	Displays correct engine speed.
19	Ambient temperature sensor	–	Ambient temperature is the same as M.U.T.-III displayed temperature
20	Air thermo sensor	–	Evaporator outlet temperature is the same as M.U.T.-III displayed temperature.
21	Interior temperature sensor	–	Interior temperature is the same as M.U.T.-III displayed temperature
23	Temperature setting		Displays air conditioner set temperature.
24	Engine coolant TEMP sensor	–	Engine coolant temperature is the same as M.U.T.-III displayed temperature.
26	Vehicle speed	–	Displays vehicle speed.
27	A/C Compressor drive request	Compressor ON	ON
		Compressor OFF	OFF
28	Air conditioning switch	Air conditioner switch ON	ON
		Air conditioner switch OFF	OFF
29	Refrigerant leak	–	Normal
34	Idle up request	–	Displays idle-up request signal.
45	In/out select damper poten (target)	–	Displays outside/inside air selection damper target position.
46	In/out select damp potentiometer	–	Displays outside/inside air selection damper position.
55	Air outlet c/o potentiometer	–	Displays air outlet changeover damper position.
56	Air outlet c/o potentio. (Target)	–	Displays air outlet changeover damper target position.
57	Low pressure	–	Normal
60	Rear defogger switch	Rear window defogger switch ON	ON
		Rear window defogger switch OFF	OFF

www.cargeek.ir

www.CarGeek.ir

Item No.	Check item	Inspection status	The display contents under normal condition
61	Pressure sensor	–	Displays refrigerant pressure.
63	Air mix potentiometer	–	Displays the air mix damper position.
67	Photo sensor	–	Displays sunload.
68	Front blower fan	–	Displays blower motor condition.
69	Front blower fan (Target)	–	Displays blower motor target value.
73	Refrigerant pressure	–	Displays refrigerant pressure status.
74	Condenser fan	–	Displays condenser fan running condition.
76	Temp. set dial position	–	Displays the set temperature output value on the control panel.
77	A/C Panel type	–	Displays as same as the specification.
78	Fan set dial position	–	Displays the air volume output value on the control panel.
79	Air outlet c/o set dial position	–	Displays output value to the air outlet changeover dial on the control panel.
80*	Fan set dial operation flag	–	ON when the air volume adjusting dial is operated
81*	A/C SW operation flag	–	ON when the air conditioner switch is operated
82*	Temp. set dial operation flag	–	ON when the air conditioner switch is operated
83*	Defogger flag	–	ON when the air outlet changeover dial is set to the DEF position.
84*	In/out air c/o SW operation flag	–	ON when the inside air/ outside air changeover switch is operated
87*	Rear defogger SW operation flag	–	ON when the rear window switch is operated
88	Rear defogger SW lamp	–	Displays rear window switch indicator status.
89	A/C SW lamp	–	Displays air conditioner switch indicator status.

www.cargeek.ir

www.CarGeek.ir

Item No.	Check item	Inspection status	The display contents under normal condition
90	In/out air c/o SW lamp	–	Displays the status of the inside air/outside air changeover switch indicator.
91	A/C Compressor drive flag	–	ON when the compressor is activated.
92	Wiper operation flag	–	ON when the wiper is operated.
93	Ignition position information	–	Ignition switch position status
94	Power source voltage	–	Displays power supply voltage.
95	IOD fuse equipment flag	–	IOD fuse status

*NOTE: *: The display may not switch if the switch operation timing does not correspond to the M.U.T.-III readout timing.*

ACTUATOR TEST TABLE

M1554005201200

Item No.	Check item	Driven content
2	Idle up request*	Idle-up request signal
5	In/out selection damper	The moving position of outside/inside air selection damper motor
6	Air mix damper motor	The moving position of air mix damper motor
7	Front blower fan	The amount of blower motor rotation
8	Air outlet c/o damper	Air outlet changeover damper motor moving position
10	Condenser fan*	The amount of condenser fan rotation
11	Air conditioner*	A/C switch selection position
12	Rear defogger switch*	Rear window defogger switch selection position

*NOTE: *: When the engine is not running these function do not work.*

CHECK AT A/C-ECU TERMINALS

M1552010302675

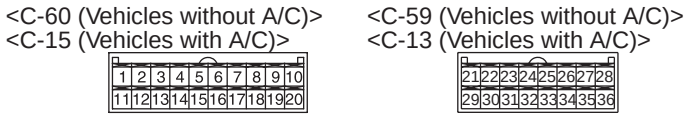

AC507400AN

Terminal No.	Check item	Check condition	Normal condition
1	Power transistor (DRAIN)	Air volume control dial: Maximum air volume	0 to 2 V
2	Power transistor (GATE)	Air volume control dial: Maximum air volume	System voltage
3 – 8	–	–	–

www.cargeek.ir

www.CarGeek.ir

Terminal No.	Check item	Check condition	Normal condition
9	A/C control panel (Signal)	–	–
10 – 12	–	–	–
13	Battery power supply	Always	System voltage
14	Earth	Always	1 V or less
15	IG power supply	Ignition switch: ON	System voltage
16	A/C pressure sensor input	Refer to .	Refer to .
17	Interior temperature sensor	Sensor probe temperature: 25°C (4.0 kΩ)	2.1 to 2.7 V
18	–	–	–
19	Sensor earth	Always	1 V or less
20	A/C pressure sensor power supply	Ignition switch: IG2	5 V
21	Air thermo sensor earth	Always	1 V or less
22	Air thermo sensor	Sensor probe temperature: 25°C (4.0 kΩ)	2.1 to 2.7 V
23	–	–	–
24	Motor for air outside/inside air circulation switching damper	–	–
25	Motor for air outside/inside air circulation switching damper	–	–
26	Motor for air outside/inside air circulation switching damper	–	–
27	Motor for air outside/inside air circulation switching damper	–	–
28	Air mix damper motor	–	–
29	Motor power supply	–	–
30	Air outlet changeover damper motor	–	–
31	Air outlet changeover damper motor	–	–
32	Air outlet changeover damper motor	–	–
33	Air outlet changeover damper motor	–	–
34	Air mix damper motor	–	–
35	Air mix damper motor	–	–
36	Air mix damper motor	–	–

www.cargeek.ir

www.CarGeek.ir

ON-VEHICLE SERVICE

DRIVE BELT INSPECTION

M1552001001651

Refer to GROUP 11A – Engine Adjustment, Drive Belt Tension Check . <1600>
Refer to GROUP 11C – Engine Adjustment, Drive Belt Tension Check . <1800 Petrol engine>
Refer to GROUP 11E – Engine Adjustment, Drive Belt Tension Check . <2000>
Refer to GROUP 11G – Engine Adjustment, Drive Belt Tension Check . <1800 Diesel engine>

REFRIGERANT LEVEL CHECK, DRAINING AND CHARGING

M1559200100312

Remove the refrigerant by the flon reclaim machine and replenish the specified quantity of refrigerant.

NOTE: Refer to the Refrigerant Recovery and Recycling Unit instruction Manual for operation of the unit.

REFILLING OF OIL IN THE A/C SYSTEM

M1552020000334

Too little oil will provide inadequate compressor lubrication and cause a compressor failure. Too much oil will increase discharge air temperature.
When a compressor is installed at the factory, it contains 60 mL <Except with 1600 (M/T)> or 70 mL <Except without 1600 (M/T)> of compressor oil.
While the A/C system is in operation, the oil is carried through the entire system by the refrigerant. Some of this oil will be trapped and retained in various parts of the system.
When the following system components are changed, it is necessary to add oil to the system to replace the oil being removed with the component.

Compressor oil: SUN PAG 56 or S10X
Quantity
Evaporator: 25 mL
Condenser: 15 mL
Each piping: 5 mL

PERFORMANCE TEST

M1552001401057

TEST CONDITION

Item		Settings
Environmental condition	Measurement location	In a shade or indoors
	Temperature	20°C – 50°C
	Humidity	Relative humidity 30 – 80% RH
Vehicle body condition	Hood	Fully opened
	Door	Fully open for door, window, and tailgate
Air conditioning condition	Air conditioner switch	ON
	Air volume	Maximum air volume
	Temperature control	MAX COOL
	Air outlet	FACE
	Outside/inside air selection	Air recirculation position
Engine speed		Specified idle speed after warming up
Transmission		N or P

TEST CONDITION SETTING

Check that the temperature/humidity of measurement location satisfies the test conditions, and then set the vehicle body conditions to the designated status according to the test conditions. If the temperature/humidity is not within the test conditions, an accurate judgment cannot be made. Therefore, postpone the performance test.

www.cargeek.ir

www.CarGeek.ir

COOLING PERFORMANCE CHECK

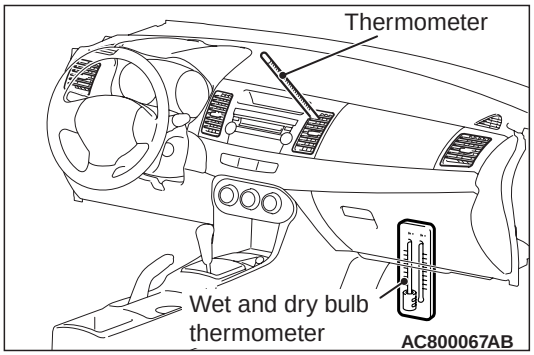

1. Insert a thermometer into the air outlet located at the centre of instrument panel.

   NOTE: Set a thermometer so that cool air from the air outlet blows directly against the sensing part.
2. Set a wet and dry bulb thermometer in the air intake of the front passenger's foot area (below the glove box).

   NOTE: Set a wet and dry bulb thermometer so that cool air does not blow against it.
3. Start the engine to warm up. Confirm that the engine speed of the test condition is satisfied.
4. Set the A/C control panel to the mode instructed in the test conditions.
5. Wait until the air outlet temperature is stable (approximately 10 minutes after the A/C starts), and measure dry-bulb/wet-bulb temperatures at the air outlet and the air intake.
6. If the air outlet temperature is in the range specified by the table below, it is judged normal. If the temperature is outside the permissible range in the table below, refer to the refrigerant gas pressure inspection result, and check each section according to the diagnosis chart of refrigerant system.

Garage ambient temperature °C	**20**	**25**	**30**	**35**	**40**	**45**	**50**
Discharge air temperature °C	4.7 – 17.3	10.0 – 22.6	15.2 – 27.9	20.4 – 33.1	25.6 – 38.4	30.9 – 43.7	36.1 – 49.0

REFRIGERANT GAS PRESSURE CHECK

⚠ CAUTION

- **The temperature of equipment in the engine room is high and the refrigerant gas pressure is also high immediately after the engine and A/C operation are stopped, thus leave the vehicle for a while, and then perform the refrigerant gas pressure check.**
- **On completion, stop the engine and wait until the high-pressure side of the gauge manifold is depressurised. Then remove the quick joints and the others.**

⚠ CAUTION

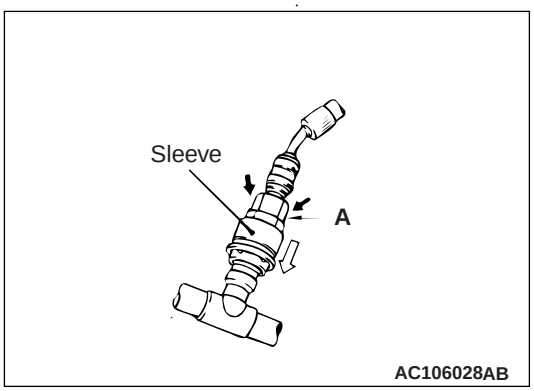

Place the quick joint onto the service valve, and press to fit the part A securely until the sleeve clicks into place.

- **When connecting, run your hand along the hose while pressing to ensure that there are no bends in the hose.**

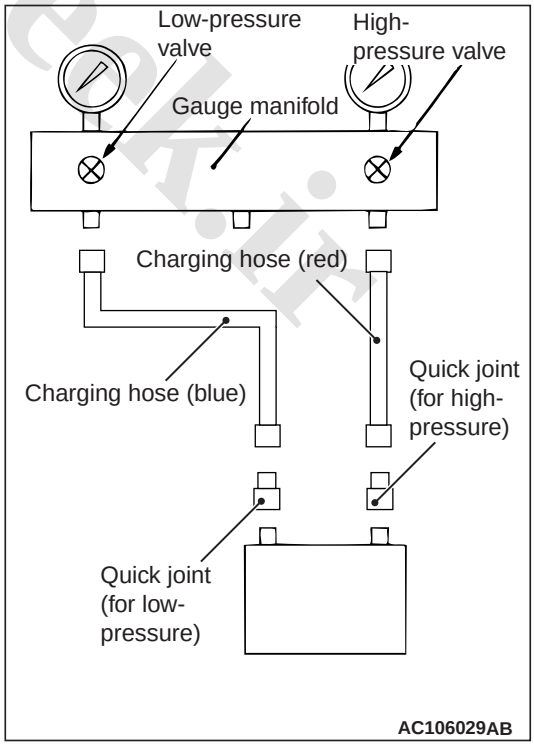

1. Check that the engine and A/C are stopped.

www.cargeek.ir

www.CarGeek.ir

2. Close the high-pressure valve of the gauge manifold.
3. Connect the charging hose (red) to the hi-pressure side of the gauge manifold.
4. Connect the quick joint (for high pressure) to the charging hose (red).
5. Install the quick joint (for high pressure) to the high-pressure side service valve of the vehicle.
6. Close the low-pressure valve of the gauge manifold.
7. Connect the charging hose (blue) to the low-pressure side of the gauge manifold.
8. Connect the quick joint (for low pressure) to the charging hose (blue).
9. Install the quick joint (for low pressure) to the low-pressure side service valve of the vehicle.
10. Start and fully warm up the engine, and then check that the engine speed of the test condition is satisfied.
11. Set the A/C control panel to the mode instructed in the test conditions.
12. Measure the high pressure/low pressure, and check that the measurement is within the permissible range of the table below. If the value is outside the permissible range, refer to the cooling performance check result, and perform a check according to the diagnosis chart of refrigerant system.

    NOTE: Prior to the measurement, wait until the refrigerant pressure is stable. (Approximately 10 minutes after A/C operation start)

Garage ambient temperature °C	**20**	**25**	**30**	**35**	**40**	**45**	**50**
Compressor high pressure kPa	934 – 1, 700	1, 067 – 1, 850	1,201 – 2,000	1,335 – 2,150	1,468 – 2,300	1,602 – 2,450	1,735 – 2,600
Compressor low pressure kPa	170 – 359	215 – 406	260 – 452	305 – 499	350 – 545	395 – 592	440 – 638

www.cargeek.ir
www.cargeek.ir

www.CarGeek.ir

DIAGNOSIS BY REFRIGERANT PRESSURE

M1552023000184

A/C system symptom	Measurement circumstance				Cause	Measures
	High pressure	Low pressure	Air outlet temperature	Note		
Cooler is not effective.	Low	High	High	• Pressure for low pressure side is high, and high pressure side is low. • When the A/C operation is stopped, the pressures of low pressure side and high pressure side immediately become identical.	• Leakage inside compressor • Faulty compression of compressor	1. Check according to the compressor check. 1. When no foreign object is present to the oil, and when the colour is light grey, replace only the compressor. 2. When foreign objects are mixed to the oil, and the colour is black, replace the compressor and receiver. 2. Perform the evacuation sufficiently to remove the foreign objects and moisture in the cycle. 3. Fill the new gas to the specified amount.
	High	High	High	• Low pressure side/ high pressure side pressure is too high. • Low pressure side piping is too hot to touch.	• Air is mixed to the refrigerant cycle. • Evacuation is insufficient.	1. Perform the evacuation sufficiently, and remove the foreign objects and moisture in the cycle. 2. Fill the new gas to the specified amount.
Sufficient cooling and insufficient cooling occur periodically.	Fluctuation	Fluctuation	Fluctuation	During the air conditioner operation, the low pressure side pressure alternates between the negative pressure and normal. (also in the high pressure side, the abnormal and normal statuses are alternated).	The moisture in the refrigerant cycle becomes frozen in the expansion valve, then the circulation of refrigerant is stopped temporarily. Subsequently, the status recovers to normal by the melting of ice.	1. Replace the receiver (drier). 2. Perform the evacuation sufficiently, and remove the moisture in the cycle. 3. Fill the new refrigerant to the specified amount.

www.cargeek.ir

www.CarGeek.ir

A/C system symptom	Measurement circumstance				Cause	Measures
	High pressure	Low pressure	Air outlet temperature	Note		
Cooler is sometimes not effective. (works occasionally)	Low	Vacuum	Fluctuation	• The low pressure side pressure indicates the vacuum, and the high pressure side indicates the low pressure. • To the piping before and after the expansion valve, frost or dew is observed.	• The foreign objects or moisture inside the refrigerant cycle deposits or freezes inside the expansion valve, and the refrigerant flow is disturbed. • Because of the expansion valve operation failure, the refrigerant flow is disturbed.	1. Check the expansion valve. 1. If foreign objects are present inside the expansion valve, remove them by using an air gun or others. 2. When no foreign object is present, the expansion valve operation failure is suspected. Therefore, replace the expansion valve. 2. Perform the evacuation sufficiently, and remove the foreign objects and moisture in the cycle. 3. Fill the new refrigerant to the specified amount.

www.cargeek.ir

www.cargeek.ir

www.CarGeek.ir

A/C system symptom	Measurement circumstance				Cause	Measures
	High pressure	Low pressure	Air outlet temperature	Note		
Cooling effectiveness is bad.	Low	Low	Slightly high	• Low pressure side/ high pressure side pressure is low. • Outlet air temperature is high.	• Gas leakage is present to somewhere in the refrigerant cycle. • Refrigerant gas amount is insufficient.	1. When the pressure gauge indication is close to zero, check the leak position, and then repair the leakage. Also, when the value is lower than the standard pressure, check if the gas leakage is present, and repair if necessary. 2. After checking the leak position, sufficiently perform the evacuation, then fill the new gas to the specified amount.
	High	High	Slightly high	Low pressure side/high pressure side pressure is too high.	• Refrigerant amount is excessive. • Condenser cooling is insufficient.	1. Clean the condenser fin (fouling, fin clogging) 2. Check the condenser fan motor (radiator fan) operation. 3. When 1 and 2 are normal, recover all the refrigerant. Then, perform a sufficient evacuation again, and fill the new gas to the specified amount.
	High	High	High	• Low pressure side/ high pressure side pressure is too high. • Frost or dew is formed to the low pressure side.	Expansion valve trouble (valve opened excessively)	Replace the expansion valve.
	Normal	Normal	Slightly high	-	Because of the slight difference of measurement environment, secular change of vehicle, or others, it is possible that the outlet temperature fluctuation has occurred.	Check the status for a while, and if the status does not improve, recover all the refrigerant, then fill to the appropriate amount.

www.cargeek.ir

www.CarGeek.ir

COMPRESSOR CHECK

Trouble symptom	Check method/ circumstance	Cause	Measures
Abnormal noise from compressor main body at A/C operation (rattling noise)	• Refrigerant cycle gauge pressure check 1. Low pressure side/high pressure side pressure is high. 2. Pressure hunting occurs.	Abnormal noise due to excessive refrigerant charging	Fill an appropriate amount of refrigerant.
	• Check the refrigerant cycle gauge pressure. When the pressure difference between the low pressure side and high pressure side is small, remove the compressor oil, and perform the oil judgment.	Damage to inside the compressor	Compressor oil judgment result: Between transparent and grey/ No contamination with foreign materials 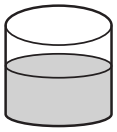 Measures: Replace only the compressor. Compressor oil judgment result: Between grey and black/ Contaminated with foreign materials easures: Replace the compressor and the rec AC610320AB
Compressor malfunction (belt slip)	Check the compressor rotation, and if a seizure or sticking is present, remove the compressor oil, then perform a judgment.		

SIMPLE INSPECTION OF THE A/C PRESSURE SENSOR

M1552014700561

1. Assemble a gauge manifold on the high pressure service valve.

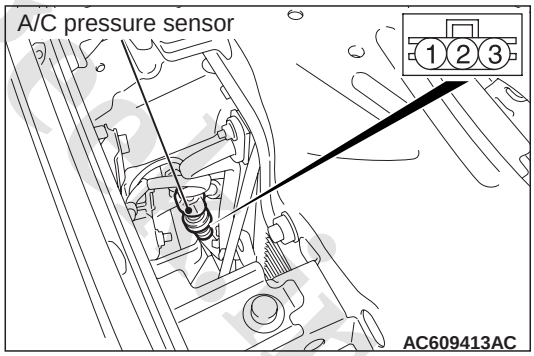

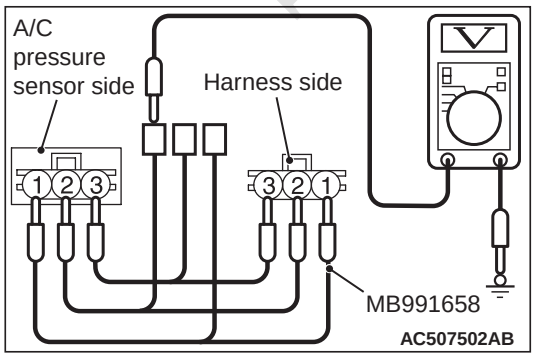

2. Disconnect the A/C pressure sensor connector and connect the special tool test harness (MB991658) as shown.

www.cargeek.ir

www.CarGeek.ir

3. Start the engine and then turn ON the air conditioner switch.

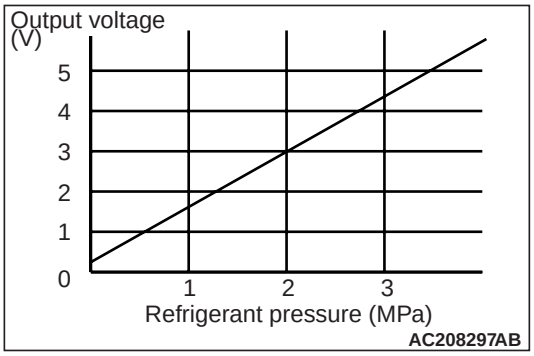

4. At this time, check to see that the voltage of the A/C pressure sensor connector terminal No. 2 reflects the specifications of the figure.

   NOTE:
   - *The allowance shall be defined as ±5%.*
   - *The A/C pressure sensor is incorporated in the discharge flexible hose, and the high-pressure service valve is incorporated in liquid pipe B. Therefore, the pressure at the A/C pressure sensor is 0.1 to 0.3 MPa higher than that at the gauge manifold.*

RELAY CHECK

M1552008801539

BLOWER RELAY CONTINUITY CHECK

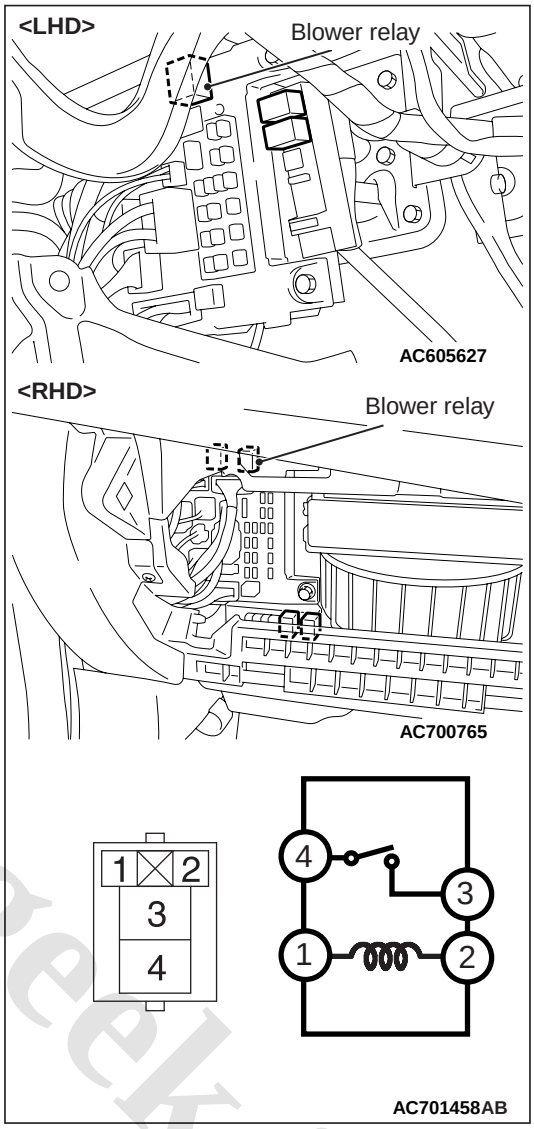

Battery voltage	Checking terminal	Normal condition
Not applied	3 – 4	No continuity
• Connect terminal 1 to the positive battery terminal • Connect terminal 2 to the negative battery terminal		Continuity exists (2 Ω or less)

www.cargeek.ir

www.CarGeek.ir

A/C COMPRESSOR RELAY CONTINUITY CHECK

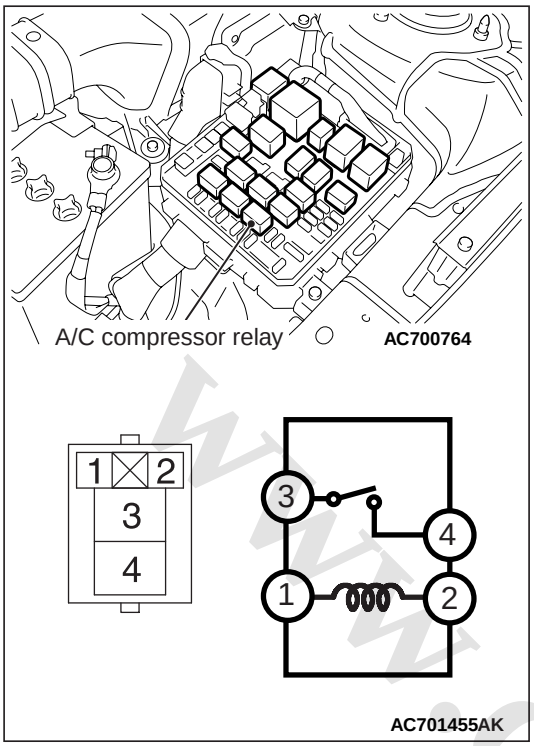

Battery voltage	Checking terminal	Normal condition
Not applied	3 – 4	No continuity
• Connect terminal 2 to the positive battery terminal • Connect terminal 1 to the negative battery terminal		Continuity exists (2 Ω or less)

PTC HEATER RELAY 1 CONTINUITY CHECK <VEHICLES WITH PTC HEATER>

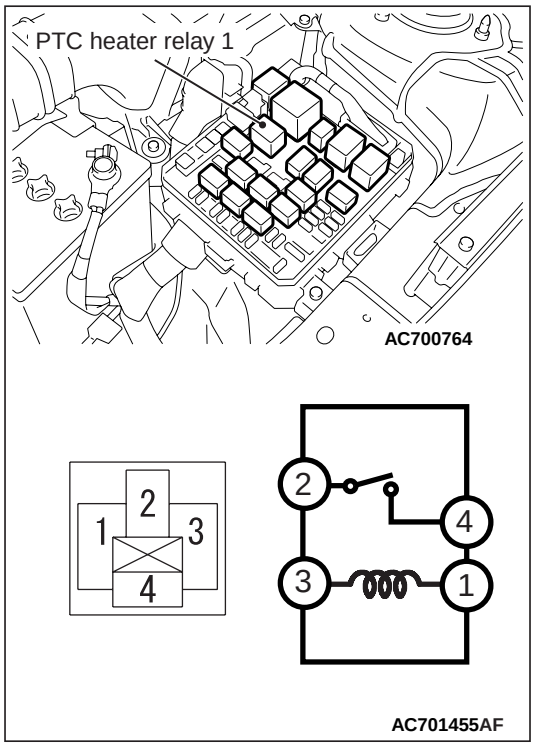

Battery voltage	Checking terminal	Normal condition
Not applied	2 – 4	No continuity
• Connect terminal 3 to the positive battery terminal • Connect terminal 1 to the negative battery terminal		Continuity exists (2 Ω or less)

www.cargeek.ir

www.CarGeek.ir

PTC HEATER RELAY 2 CONTINUITY CHECK <VEHICLES WITH PTC HEATER>

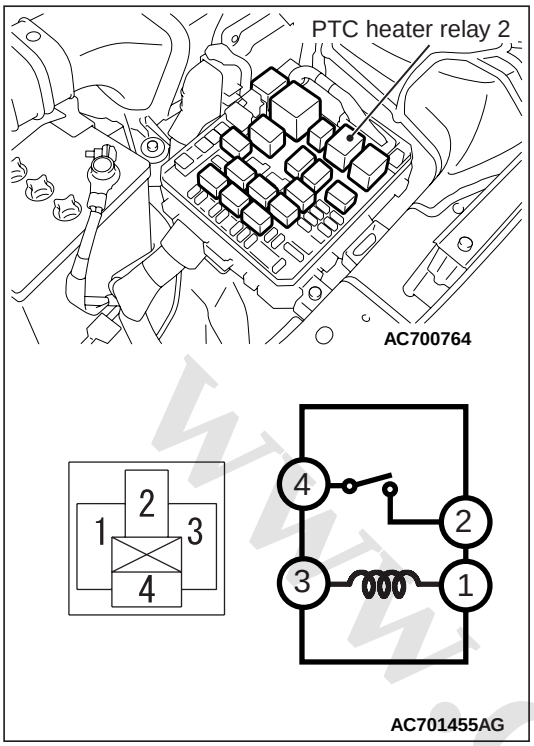

Battery voltage	Checking terminal	Normal condition
Not applied	2 – 4	No continuity
• Connect terminal 3 to the positive battery terminal • Connect terminal 1 to the negative battery terminal		Continuity exists (2 Ω or less)

PTC HEATER RELAY 3 CONTINUITY CHECK <DISEL ENGINE>

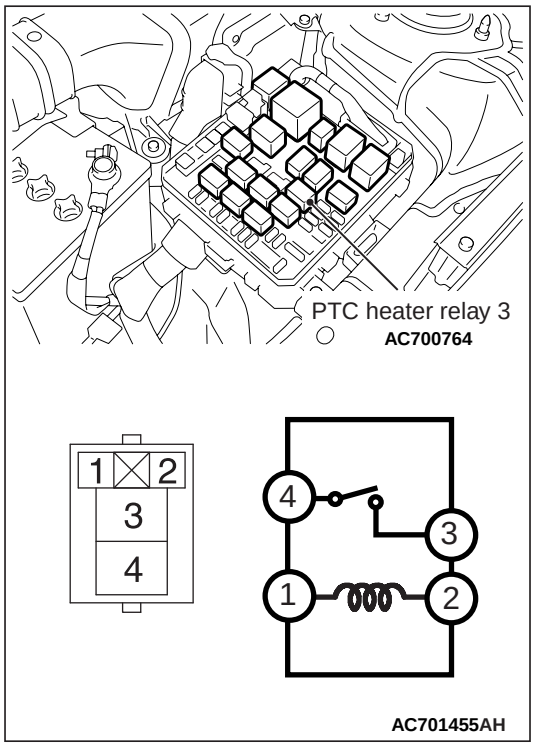

Battery voltage	Checking terminal	Normal condition
Not applied	3 – 4	No continuity
• Connect terminal 1 to the positive battery terminal • Connect terminal 2 to the negative battery terminal		Continuity exists (2 Ω or less)

IDLE-UP INSPECTION

M1552001602054

1. Before inspection, set the vehicle to the pre-inspection condition.
2. Check that the idling speed is within the standard value range.

   Standard value:

   <1600>
   750 ± 50 r/min

   <1800 Petrol>
   650 ± 50 r/min (M/T)
   700 ± 50 r/min (CVT)

www.cargeek.ir

www.CarGeek.ir

<1800 Diesel>
650 ± 50 r/min

<2000>
700 ± 50 r/min

NOTE: The idling speed is controlled by the ISC system automatically, so does not require adjustment.

3. Operate the air conditioner by turning on the A/C switch. Then check that the idling speed is within the standard value range.

Standard value:

<1800 Petrol, 2000>
750 ± 100 r/min

<1600>
850 ± 100 r/min

<1800 Diesel>
900 ± 100 r/min

REPLACE THE CLEAN AIR FILTER

M1552020600369

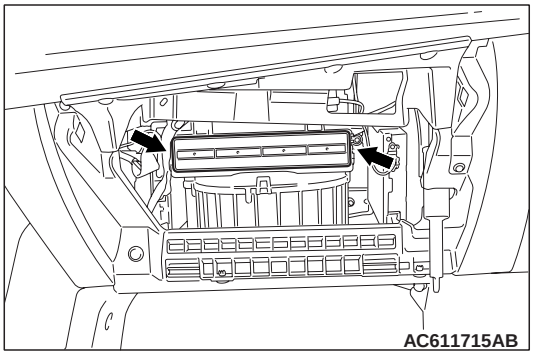

1. Remove the glove box (Refer to GROUP 52A – Instrumental Panel,).
2. Loosen the two lugs as shown to replace the clean air filter.
3. Install the glove box.

HEATER CONTROL UNIT

REMOVAL AND INSTALLATION

M1554014700523

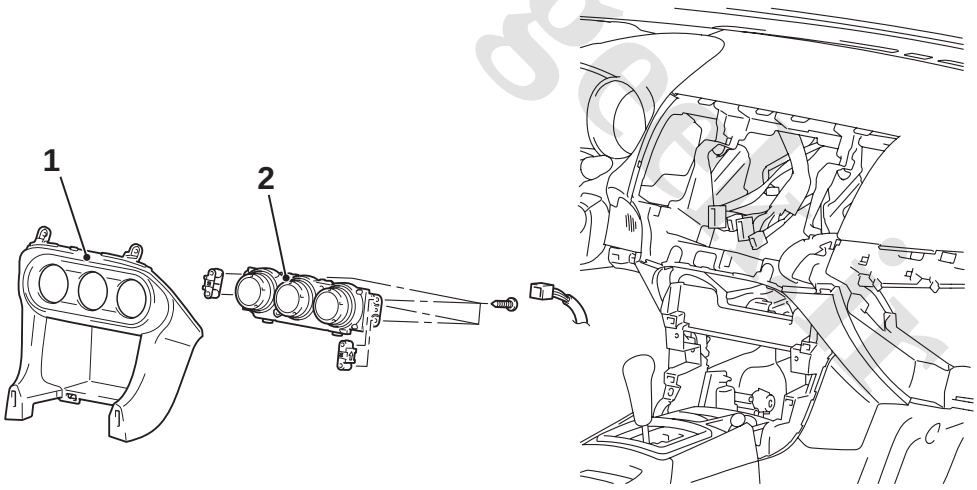

AC608191AD

Removal steps

1. Instrument panel centre lower (Refer to GROUP 52A, Instrument panel centre panel)
2. Heater control panel <Vehicles without A/C> or A/C control panel <Vehicles with A/C>

www.cargeek.ir

www.CarGeek.ir

HEATER UNIT AND BLOWER ASSEMBLY

REMOVAL AND INSTALLATION

M1552020801032

⚠ ***WARNING***

For removal and installation of the passenger's side air bag module, always observe the service procedures described in GROUP 52B, Driver's Air Bag Module to Passenger's (Front) Air Bag Module .

Pre-removal and Post-installation Operation

- Refrigerant draining and Refilling (Refer to Charging and Discharging).
- Engine coolant replacement (Refer to GROUP 14, on-vehicles service <4A9>, <4B10, 4J1>, <4N1>).
- Steering column shaft assembly Removal and Installation (Refer to GROUP 37A, Steering Column Shaft <Power steering> or GROUP 37B, Steering Column Shaft <Electrical power steering>).
- Instrument Panel Removal and Installation (Refer to GROUP 52A, Instrument Panel).
- Floor console Removal and Installation (Refer to GROUP 52A, Floor console).

www.cargeek.ir

www.cargeek.ir

www.CarGeek.ir

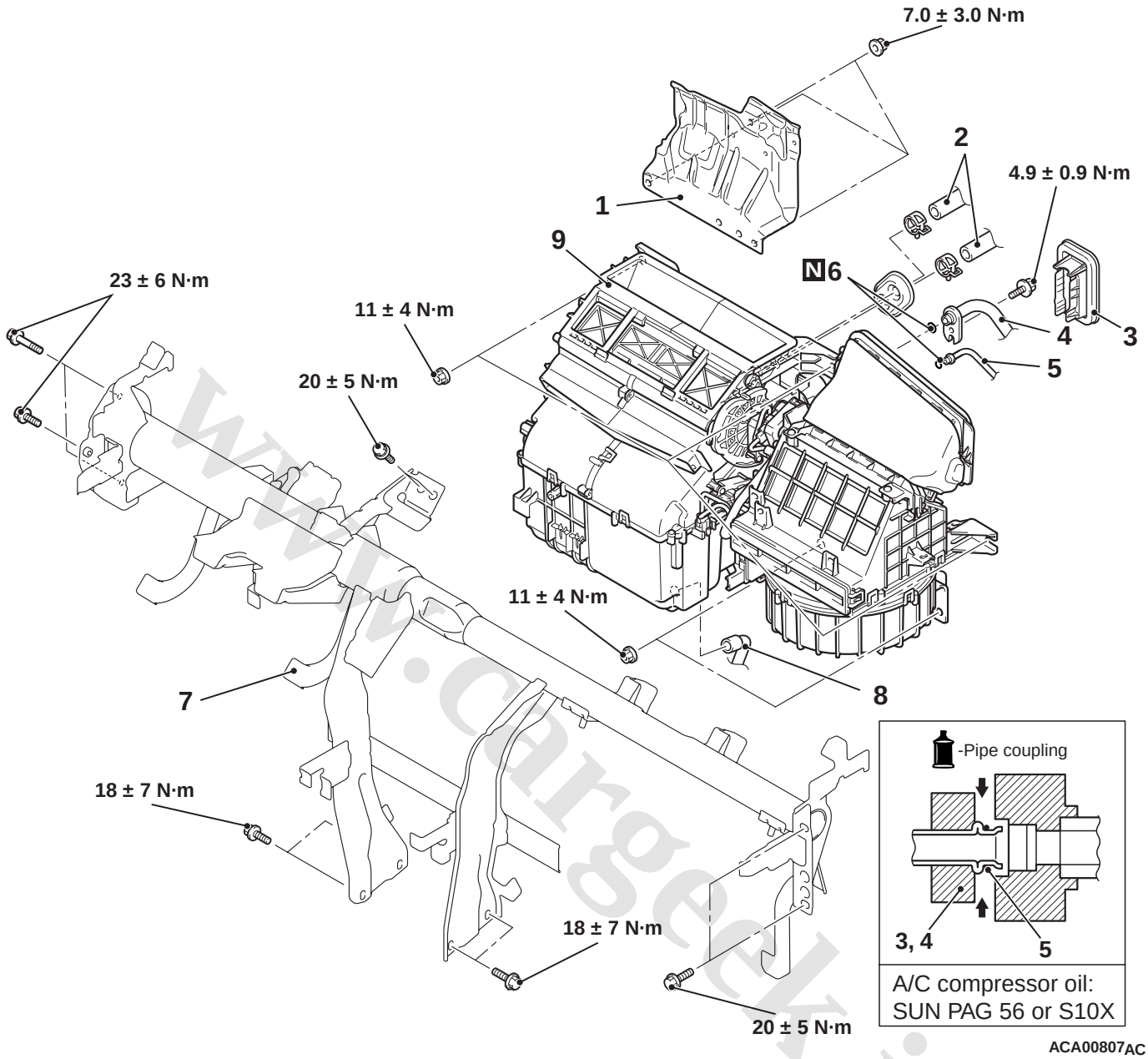

Removal steps

1. Dash panel heat protector
2. Heater hose connection
3. Expansion valve cover <diesel engine>
<<A>> 4. Suction pipe connection
<<A>> 5. Liquid pipe connection
6. O-ring
<<B>> 7. Front deck crossmember
8. Drain hose
9. Heater unit

REMOVAL SERVICE POINTS

<<A>> SUCTION PIPE AND LIQUID PIPE DISCONNECTION

⚠ CAUTION

As the compressor oil and receiver are highly moisture absorbent, use a non-porous material to plug the hose and nipples.

To prevent the entry of dust or other foreign bodies, plug the dismantled hose and the nipples of the expansion valves.

www.cargeek.ir

www.CarGeek.ir

<<B>> FRONT DECK CROSSMEMBER REMOVAL

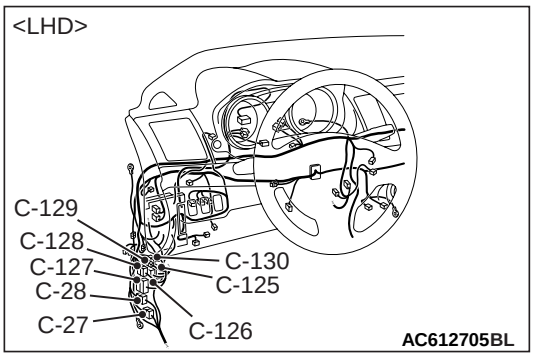

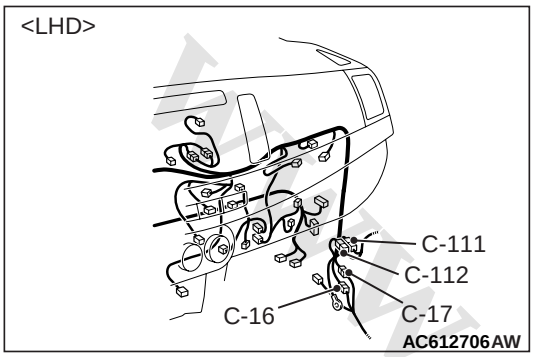

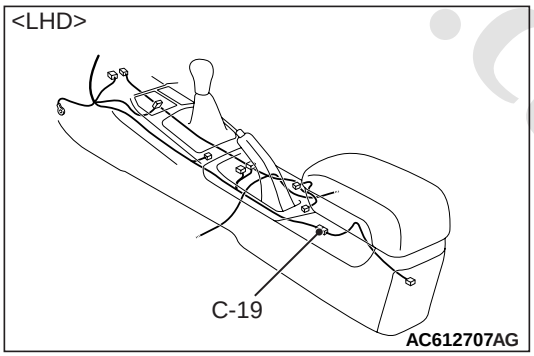

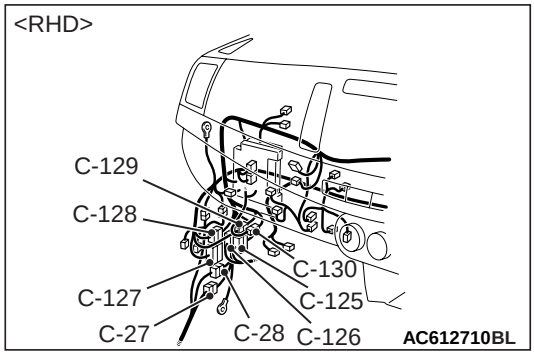

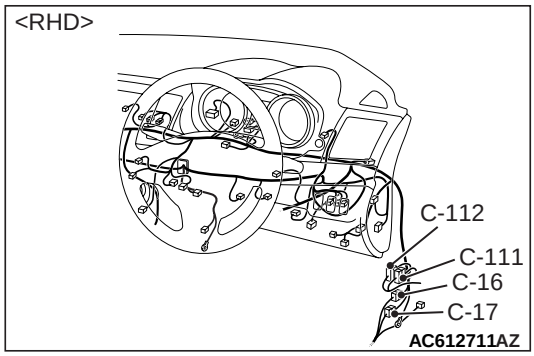

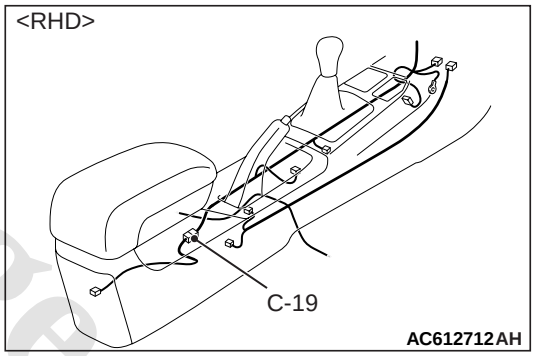

Disconnect the following connectors to gain access to the front deck crossmember.

Connector number	Connector name
C-16	Instrument panel wiring harness and floor wiring harness combination
C-17	Instrument panel wiring harness and floor wiring harness combination
C-19	Instrument panel wiring harness and console wiring harness combination
C-27	Instrument panel wiring harness and floor wiring harness combination
C-28	Instrument panel wiring harness and floor wiring harness combination
C-111	Instrument panel wiring harness and front door wiring harness combination
C-112	Instrument panel wiring harness and front door wiring harness (RH) combination

www.cargeek.ir

www.CarGeek.ir

Connector number	Connector name
C-125	Instrument panel wiring harness and front door wiring harness (LH) combination
C-126	Instrument panel wiring harness and front door wiring harness (LH) combination
C-127	Instrument panel wiring harness and front wiring harness combination
C-128	Instrument panel wiring harness and front wiring harness combination
C-129	Instrument panel wiring harness and front wiring harness combination
C-130	Instrument panel wiring harness and roof wiring harness combination

www.cargeek.ir

www.cargeek.ir

www.CarGeek.ir

DISASSEMBLY AND REASSEMBLY

M1552020900702

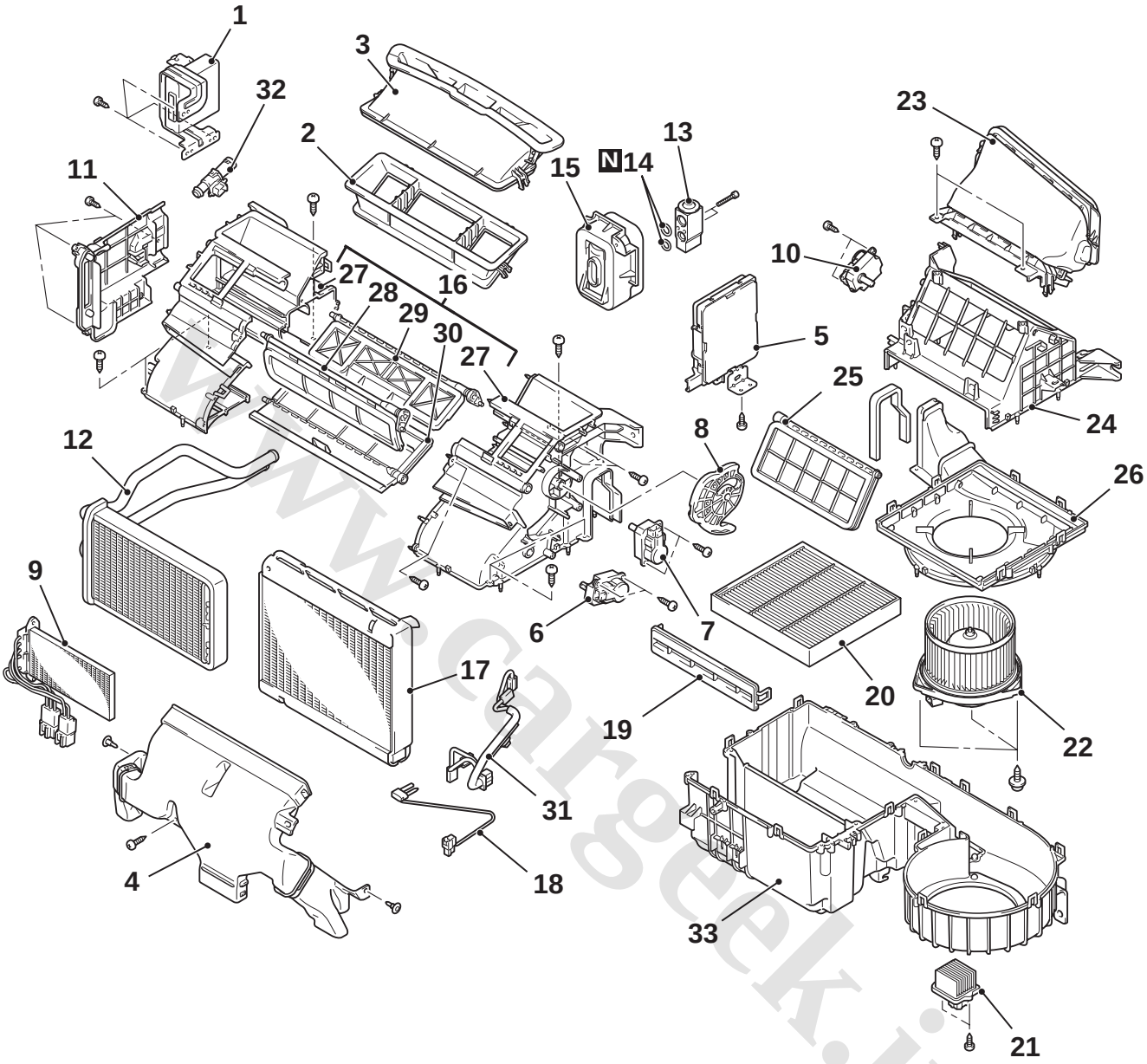

ACA00925AB

Disassembly steps

1. KOS-ECU
2. Rear centre duct
3. Front centre duct
4. Foot duct
5. Heater control unit <Vehicles without A/C> or A/C-ECU <Vehicles with A/C>
6. Air mixing damper control motor
7. Mode selection damper control motor
8. Mode lever
9. PTC heater <Diesel engine>
10. Outside/Inside air selection damper control motor

Disassembly steps (Continued)

11. Heater core cover
12. Heater core
13. Expansion valve
14. O-ring
15. Expansion valve cover
16. Upper case assembly
17. Evaporator
18. Fin thermo sensor
19. Air filter cover
20. Air filter
21. Power transistor
22. Blower motor
23. Air intake duct
24. Blower case upper

www.cargeek.ir

www.CarGeek.ir

Disassembly steps (Continued)

25. Outside/inside air selection damper
26. Blower case lower
27. Upper case
28. Mode selection damper (FOOT)
29. Mode selection damper (DEF)
30. Air mixing damper
31. Wiring harness
32. Aspirator
33. Lower case

INSPECTION

M1552014304101

FIN THERMO SENSOR CHECK

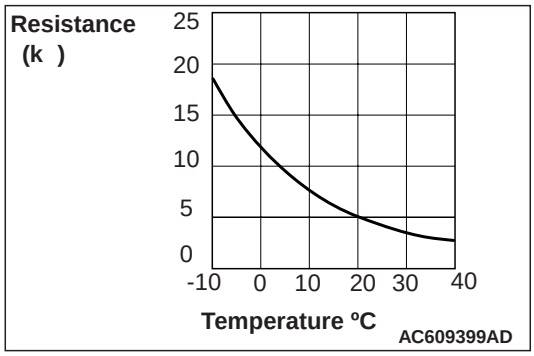

Check that the resistance shown in the graph is almost satisfied when measuring the resistance between the terminals under two or more different temperature conditions.

NOTE: The temperature condition in checking should be within the range shown.

HEATER HOSE <Diesel engine>

REMOVAL AND INSTALLATION <DIESEL ENGINE>

M1551007700180

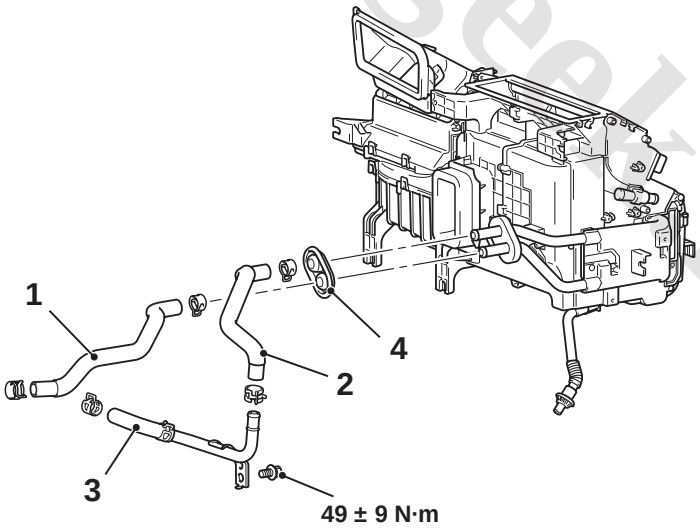

AC900342AB

Heater hose removal steps

1. Heater water hose A
2. Heater water hose B
3. Heater water hose assembly
4. Grommet

www.cargeek.ir

www.CarGeek.ir

MODE SELECTION DAMPER CONTROL MOTOR, AIR MIXING DAMPER CONTROL MOTOR, OUTSIDE/INSIDE AIR SELECTION DAMPER CONTROL MOTOR, POWER TRANSISTOR AND BLOWER MOTOR

REMOVAL AND INSTALLATION

M1554014900419

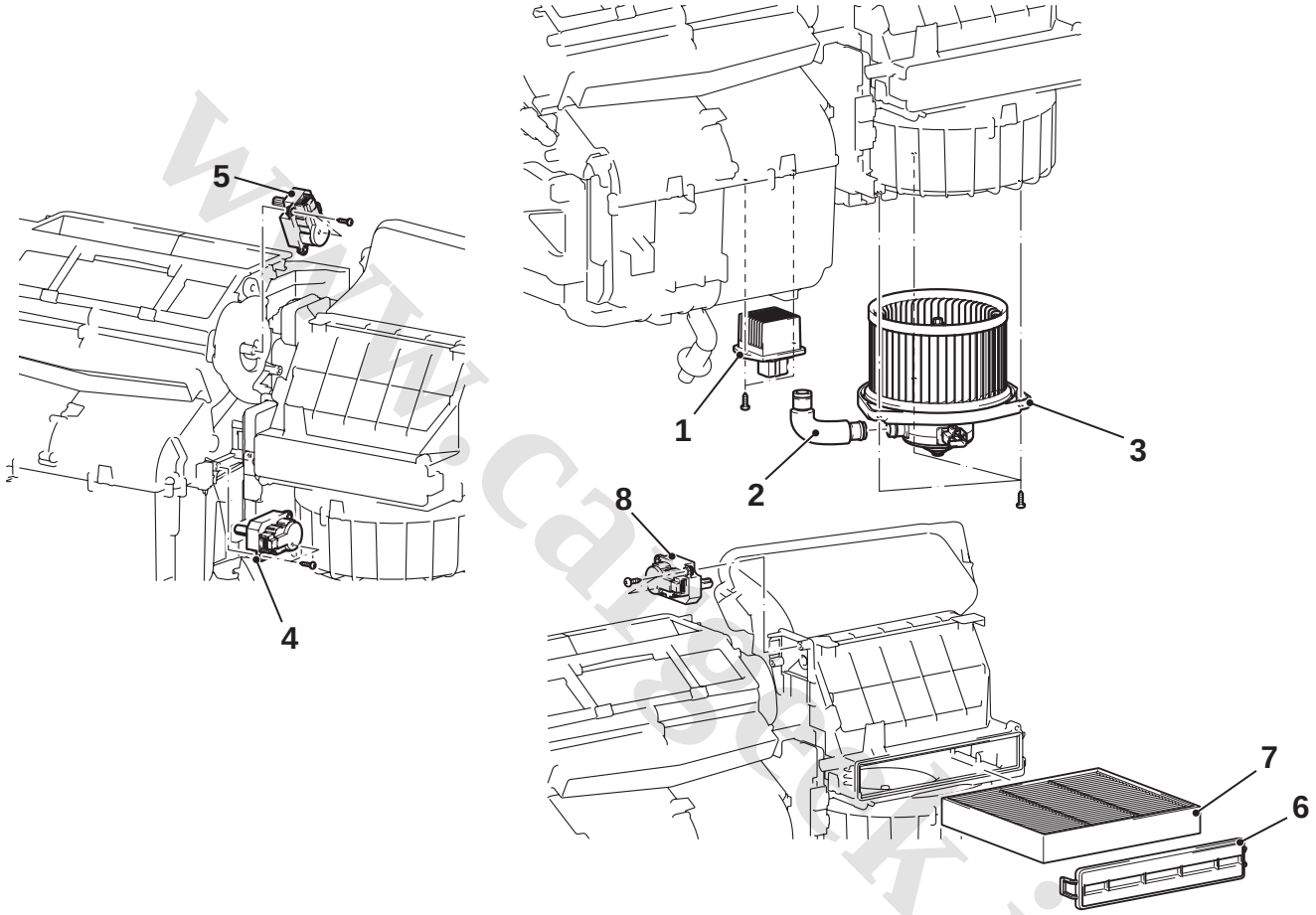

AC708788AB

Power transistor removal steps

- Bottom cover assembly (passenger's side) (Refer to GROUP 52A – Instrument Panel).

1. Power transistor

Blower motor removal steps

- Bottom cover assembly (passenger's side) (Refer to GROUP 52A – Instrument Panel). <<**A**>>

2. Hose <<**A**>>
3. Blower motor

<<**A**>> >>**A**<<

Air mixing damper control motor, mode selection damper control motor and outside/inside air selection damper control motor removal steps

- Foot duct (Refer to).
- A/C-ECU (Refer to).

4. Air mixing damper control motor
5. Mode selection damper control motor
6. Clean air filter cover
7. Clean air filter
8. Outside/inside air selection damper control motor

www.cargeek.ir

www.CarGeek.ir

REMOVAL SERVICE POINT

<<A>> AIR MIXING DAMPER CONTROL MOTOR, OUTSIDE/INSIDE AIR SELECTION DAMPER CONTROL MOTOR, MODE SELECTION DAMPER CONTROL MOTOR REMOVAL

NOTE:

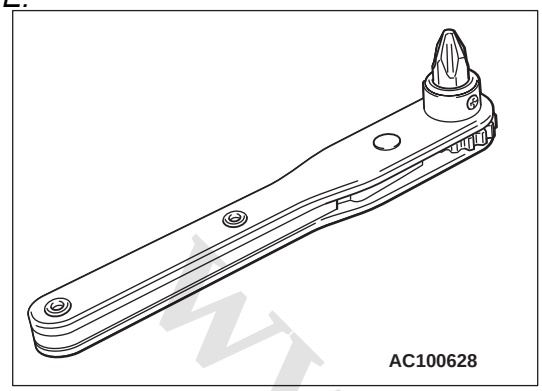

A normal plate-type ratchet driver is recommended.

INSTALLATION SERVICE POINT

>>A<< OUTSIDE/INSIDE AIR SELECTION DAMPER CONTROL MOTOR INSTALLATION

Install the outside/inside air selection damper control motor while pressing the outside/inside air selection damper from the hole of the blower motor.

INSPECTION

M1552014304305

BLOWER MOTOR CHECK

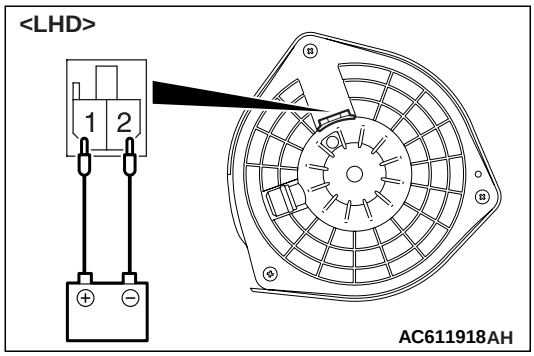

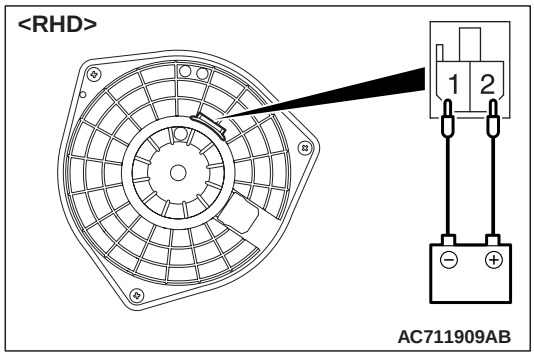

Check that the motor turns when applying battery power between the connector terminals. Also check to see that there is no abnormal sound emitted from the motor at this time.

www.cargeek.ir

www.CarGeek.ir

AMBIENT TEMPERATURE SENSOR

REMOVAL AND INSTALLATION

M1554003400603

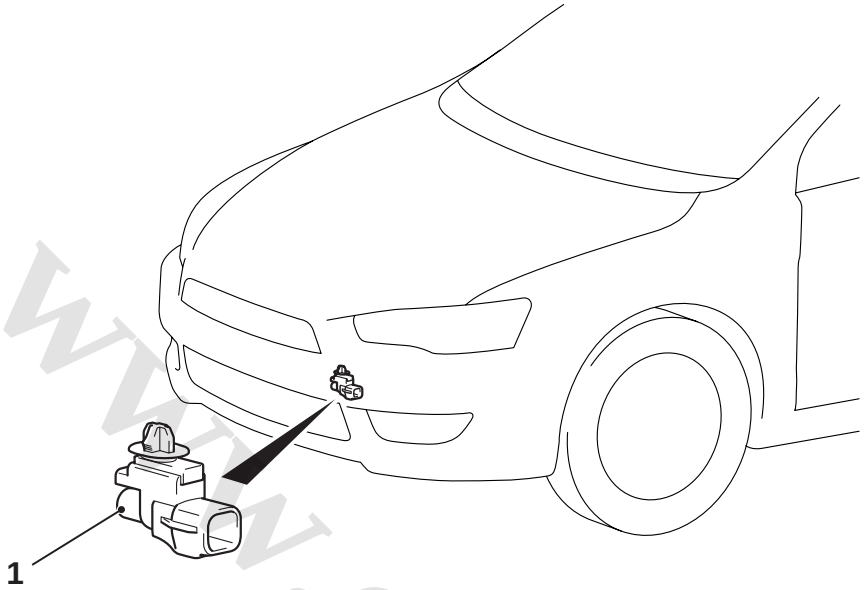

AC609030AE

Removal steps

- Air cleaner intake duct (Refer to GROUP 15, Air Cleaner)
- Headlamp support panel cover (Refer to GROUP 51, Front Bumper and Radiator Grille)

1. Ambient temperature sensor

INSPECTION

M1552014304123

AMBIENT TEMPERATURE SENSOR CHECK

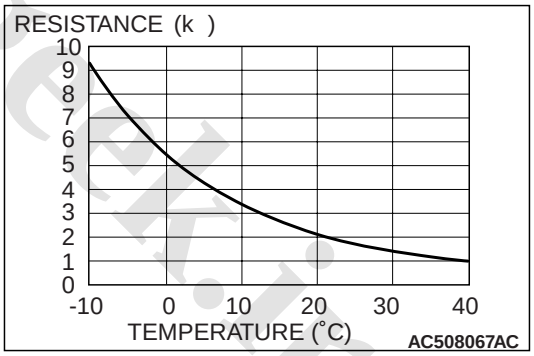

Check to see that the resistance shown in the graph is almost satisfied when measuring the resistance between the terminals under two or more different temperature conditions.

www.cargeek.ir

www.CarGeek.ir

A/C-ECU

REMOVAL AND INSTALLATION

M1554016600447

Pre-removal and Post-installation Operation
- Glove Box and Bottom Cover Assembly (passenger's side) Removal and Installation (Refer to GROUP 52A – Instrument Panel).
- Foot duct Removal and Installation (Refer to).

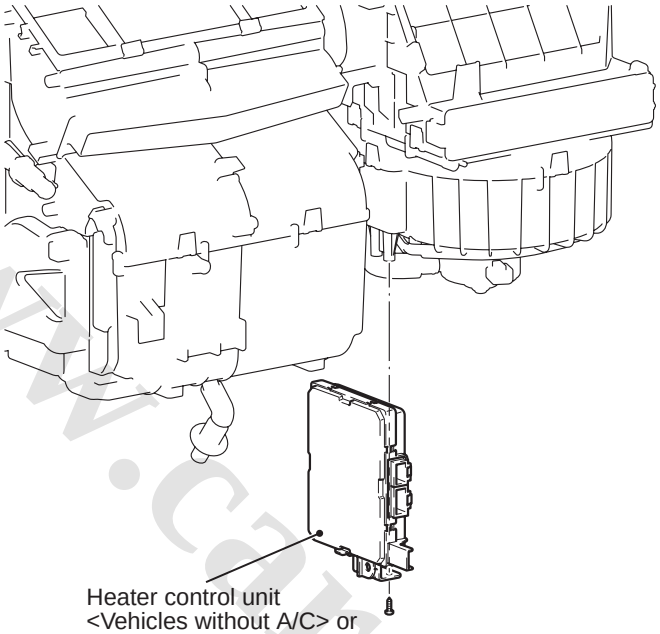

AC900349AB

www.cargeek.ir

www.cargeek.ir

www.CarGeek.ir

PTC HEATER <Vehicles with PTC heater>

REMOVAL AND INSTALLATION

M1554023000179

⚠ WARNING

- ***Before removing the front seat assembly, refer to GROUP 52B, Service Precautions and Knee air bag module .***
- ***Never attempt to disassemble or repair the PTC sensor. If faulty, replace it with new one(s).***

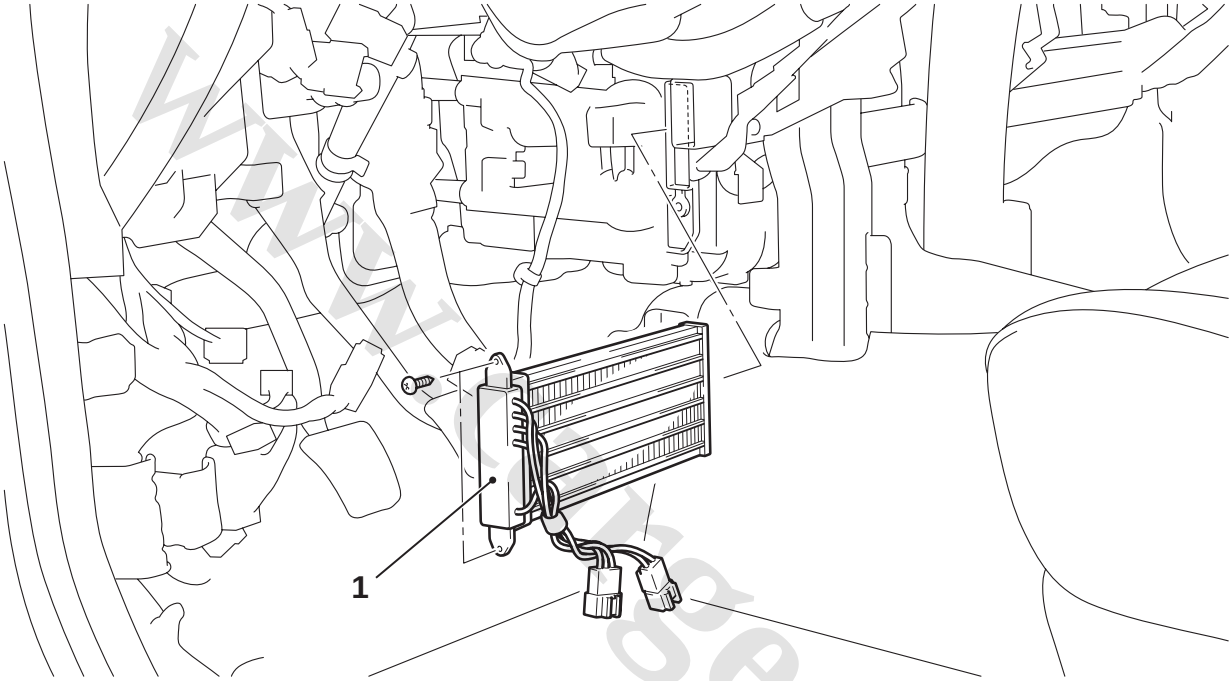

AC612223AB

Removal steps

- Floor console, Floor console side cover (Refer to GROUP 52A – Floor console assembly).
- Bottom cover (passenger side), Glove box side panel, Glove box damper, Glove box, Glove box cover (Refer to GROUP 52A – Glove box).
- Instrument panel air outlet garnish lower (RH), Instrument centre panel, Instrument panel console box, Instrument panel under cover (Refer to GROUP 52A – Instrument centre panel).
- Instrument panel cover lower <Vehicle with Instrument panel cover lower>, Instrument panel lower (Refer to GROUP 52A – Instrument centre panel).

Removal steps (Continued)

- Foot duct LH, Foot duct RH (Refer to).
- Knee air bag module (Refer to GROUP 52B – Knee air bag module).
- Radio and CD player assembly (Refer to GROUP 54A – Radio and CD player).

<<A>> 1. PTC heater

REMOVAL SERVICE POINT

<<A>> PTC HEATER REMOVAL

Remove the PTC heater as described below.

www.cargeek.ir

www.CarGeek.ir

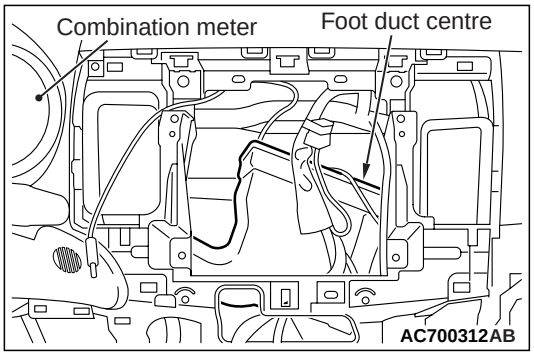

1. Slide the foot duct centre so that a precision screwdriver can be inserted from the upper side of the PTC heater connector.

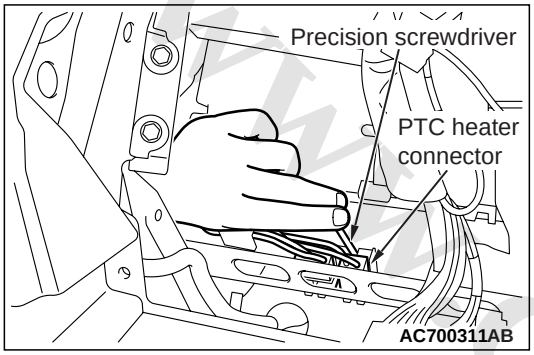

2. Insert a precision screwdriver from the upper side of the PTC heater connector, and disconnect the connector.
3. Remove the PTC heater screws.

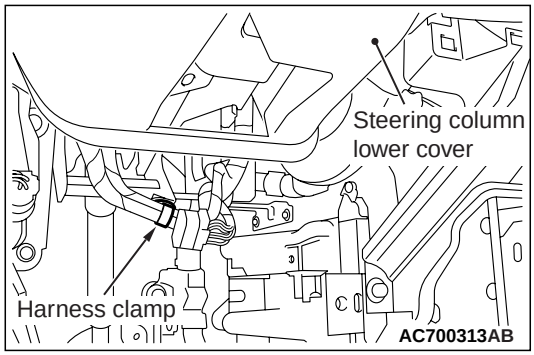

4. Remove the harness clamp shown in the figure, and pull out the PTC heater.

INSPECTION

M1552014304316

PTC HEATER CHECK

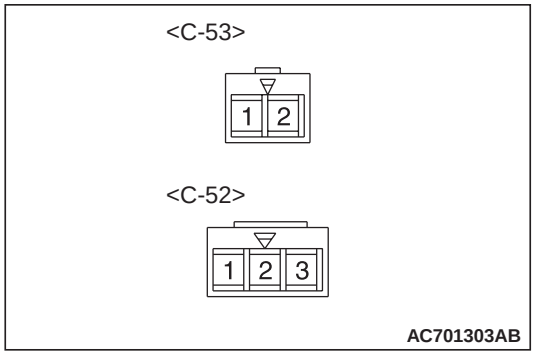

Tester connection	Specified condition
C-52 terminal No. 1 – C-53 terminal No. 1	Continuity exists
C-52 terminal No. 1 – C-53 terminal No. 2	Continuity exists
C-52 terminal No. 2 – C-53 terminal No. 2	Continuity exists
C-52 terminal No. 3 – C-53 terminal No. 2	Continuity exists

www.cargeek.ir

www.CarGeek.ir

COMPRESSOR ASSEMBLY

REMOVAL AND INSTALLATION <1600 (M/T)>

M1552004403580

⚠ CAUTION

- **When removing the compressor, be careful not to subject the pulley and the clutch to impact.**

Pre-removal operation	Post-installation Operation
• Discharging refrigerant (Refer to)	• Drive belt installation (Refer to GROUP 11A Crankshaft Pulley)
• Engine room under cover front A and B, Engine room side cover removal (Refer to GROUP 51, Under Cover).	• Drive belt tension check and adjustment (Refer to GROUP 11A – Drive Belt Tension Check). <Petrol engine>
• Drive belt removal (Refer to GROUP 11A Crankshaft Pulley)	• Charging refrigerant (Refer to)
	• Engine room under cover front A and B, Engine room side cover installation (Refer to GROUP 51, Under Cover).

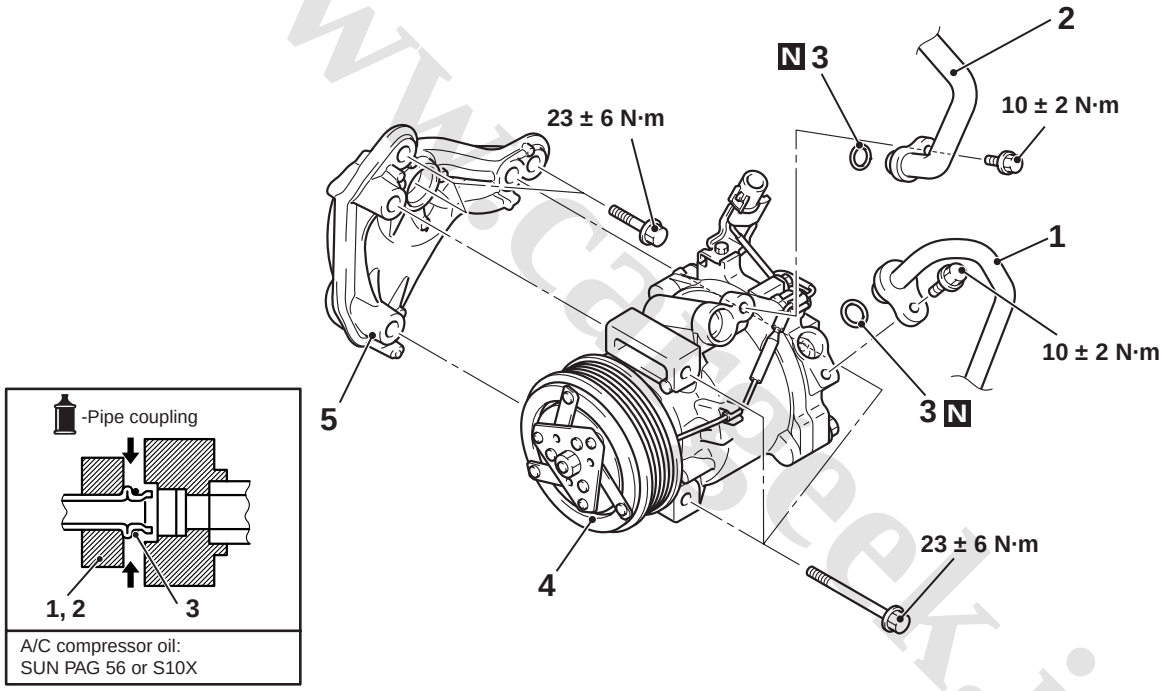

ACB01639 AB

Removal steps

<<A>>	1.	Discharge flexible hose connection
<<A>>	2.	Suction flexible hose connection
	3.	O-ring
<<B>> >>A<<	4.	A/C compressor and clutch assembly
	5.	A/C compressor bracket

NOTE: The service points which are not described are the same as before.

REMOVAL SERVICE POINTS

<<A>> DISCHARGE FLEXIBLE HOSE/SUCTION FLEXIBLE HOSE DISCONNECTION

⚠ CAUTION

Use the plug which is not breathable because A/C compressor oil or receiver have high hygroscopicity.

Plug the hose nipple removed to prevent the entry of dust and dirt.

<<B>> A/C COMPRESSOR AND CLUTCH ASSEMBLY REMOVAL

Be careful not to spill the A/C compressor oil and remove the A/C compressor.

www.cargeek.ir

www.CarGeek.ir

INSTALLATION SERVICE POINT

>>A<< A/C COMPRESSOR AND CLUTCH ASSEMBLY INSTALLATION

If a new compressor is installed, first adjust the amount of oil according to the procedures described below, and then install the compressor.

1. Measure the amount X mL of oil within the removed compressor.
2. Drain (from the new compressor) the amount of oil calculated according to the following formula, and then install the new compressor.

   New compressor oil amount = 60mL

   60 mL – X mL = Y mL

NOTE: Y mL indicates the amount of oil in the refrigerant line, the condenser, the evaporator, etc.

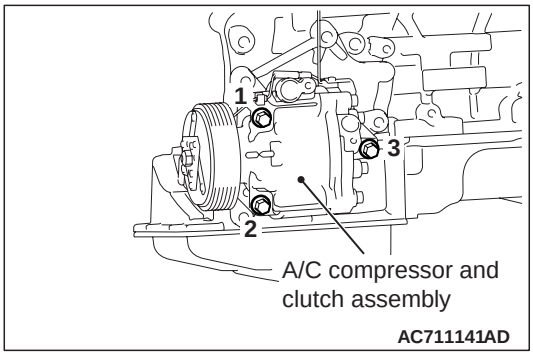

3. Tighten A/C compressor assembly mounting bolts to the specified torque in the order of number shown in the figure.

   Tightening torque: 23 ± 6 N·m

www.cargeek.ir

www.CarGeek.ir

REMOVAL AND INSTALLATION <Except 1600 (M/T) >

M1552004403568

⚠ CAUTION

- **When removing the compressor, be careful not to subject the pulley and the clutch to impact.**

Pre-removal operation	Post-installation Operation
• Discharging refrigerant (Refer to) • Engine room under cover front A and B, Engine room side cover removal (Refer to GROUP 51, Under Cover). • Drive belt removal (Refer to GROUP 11A Crankshaft Pulley) <Petrol engine> • Drive belt removal (Refer to GROUP 11C, Crankshaft Pulley) <Diesel engine>	• Drive belt installation (Refer to GROUP 11A Crankshaft Pulley) <Petrol engine> • Drive belt installation (Refer to GROUP 11C Crankshaft Pulley) <Diesel engine> • Drive belt tension check and adjustment (Refer to GROUP 11A – Drive Belt Tension Check). <Petrol engine> • Drive belt tension check and adjustment (Refer to GROUP 11C – Drive Belt Tension Check). <Diesel engine> • Charging refrigerant (Refer to) • Engine room under cover front A and B, Engine room side cover installation (Refer to GROUP 51, Under Cover).

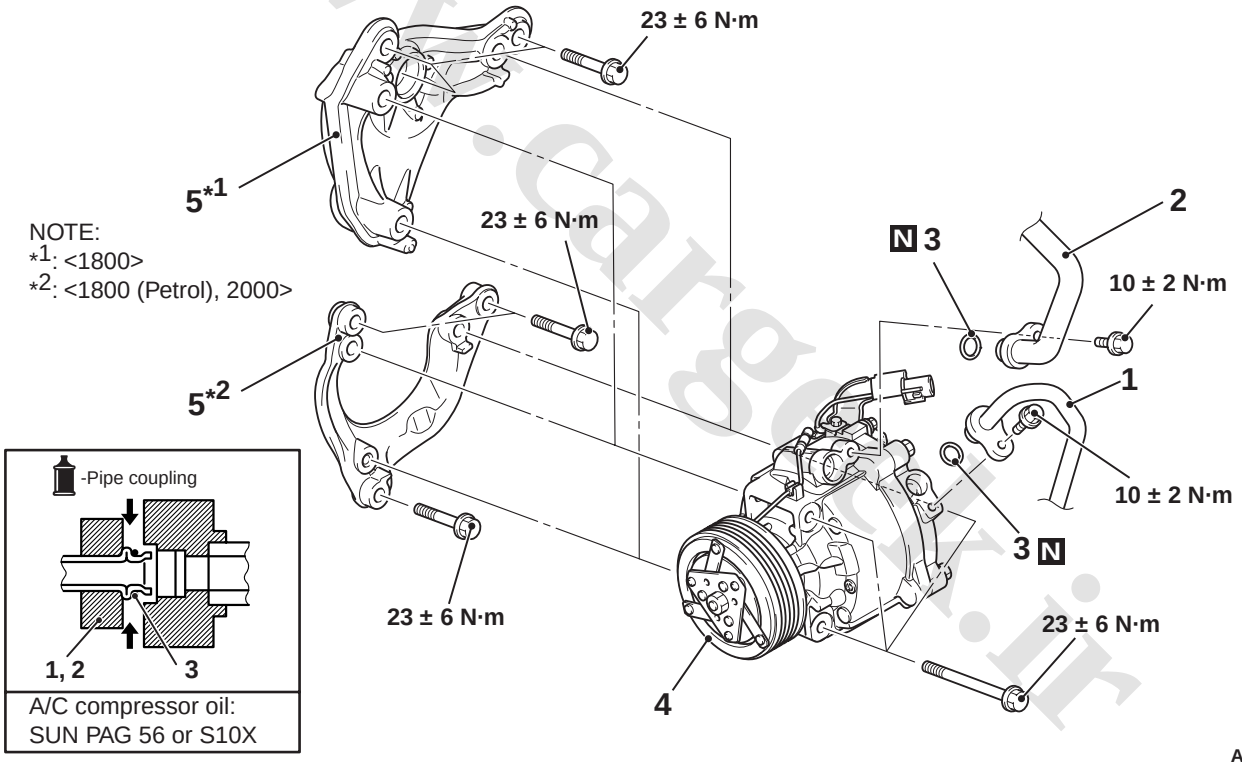

ACB01836AC

Removal steps

<<A>>	1.	Discharge flexible hose connection
<<A>>	2.	Suction flexible hose connection
	3.	O-ring
<<B>> >>A<<	4.	A/C compressor and clutch assembly
	5.	A/C compressor bracket <Petrol>

NOTE: The service points which are not described are the same as before.

<<B>> A/C COMPRESSOR AND CLUTCH ASSEMBLY REMOVAL

REMOVAL SERVICE POINTS

<<A>> DISCHARGE FLEXIBLE HOSE/SUCTION FLEXIBLE HOSE DISCONNECTION

⚠ CAUTION

Use the plug which is not breathable because A/C compressor oil or receiver have high hygroscopicity.

Plug the hose nipple removed to prevent the entry of dust and dirt.

Be careful not to spill the A/C compressor oil and remove the A/C compressor.

www.cargeek.ir

www.CarGeek.ir

INSTALLATION SERVICE POINT

>>A<< A/C COMPRESSOR AND CLUTCH ASSEMBLY INSTALLATION

If a new compressor is installed, first adjust the amount of oil according to the procedures described below, and then install the compressor.

1. Measure the amount X mL of oil within the removed compressor.
2. Drain (from the new compressor) the amount of oil calculated according to the following formula, and then install the new compressor.

   New compressor oil amount = 70mL

   70 mL – X mL = Y mL

NOTE: Y mL indicates the amount of oil in the refrigerant line, the condenser, the evaporator, etc.

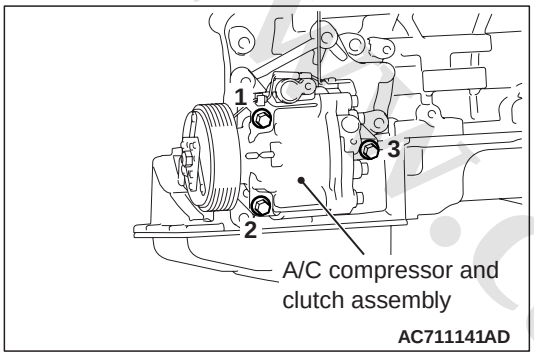

3. Tighten A/C compressor assembly mounting bolts to the specified torque in the order of number shown in the figure.

   Tightening torque: 23 ± 6 N·m

INSPECTION

M1552004501451

CHECK THE MAGNETIC CLUTCH FOR A/C COMPRESSOR

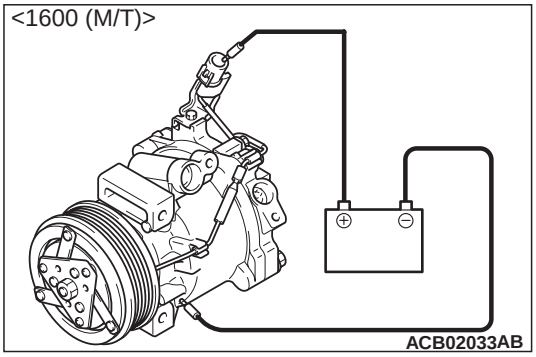

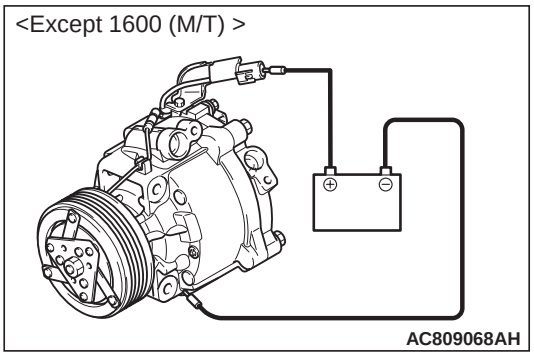

Connect the connector battery to positive battery terminal in the A/C compressor, and then earth the battery (–) terminal to the A/C compressor itself. At this time, check that the magnetic clutch operating sound can be heard.

www.cargeek.ir

www.CarGeek.ir

DISASSEMBLY AND REASSEMBLY <1600 (M/T) >

M1552004603506

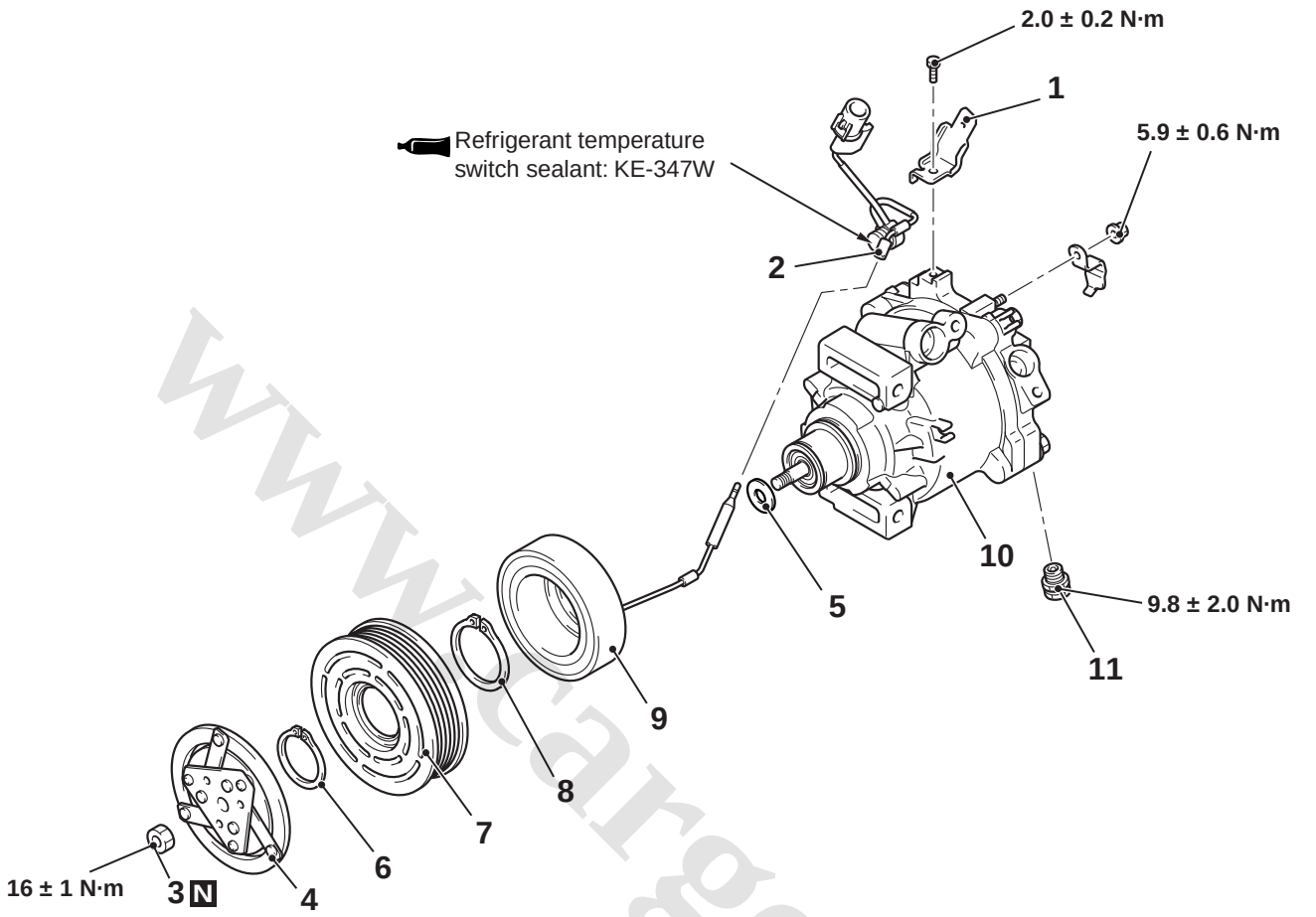

ACB01638AB

Refrigerant temperature switch disassembly steps

1. Bracket
2. Refrigerant temperature switch

A/C compressor clutch disassembly steps

>>F<< • Air gap adjustment

<<A>> >>E<< 3. Self-locking nut
4. Armature
5. Shim

>>D<< 6. Snap ring

<<B>> >>C<< 7. Rotor
8. Snap ring

>>B<< 9. A/C compressor coil
10. A/C compressor

>>A<< 11. A/C compressor high pressure relief valve

<<B>> ROTOR REMOVAL

DISASSEMBLY SERVICE POINTS

<<A>> SELF-LOCKING NUT REMOVAL

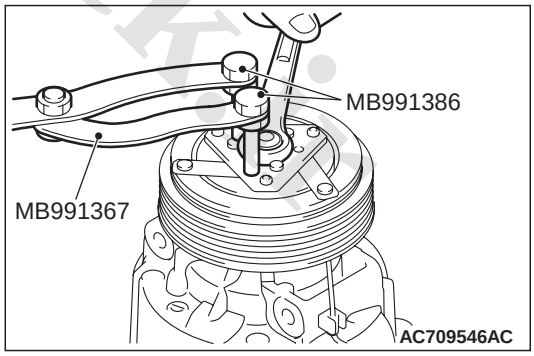

Use the special tools below to remove the self-locking nut.

www.cargeek.ir

www.CarGeek.ir

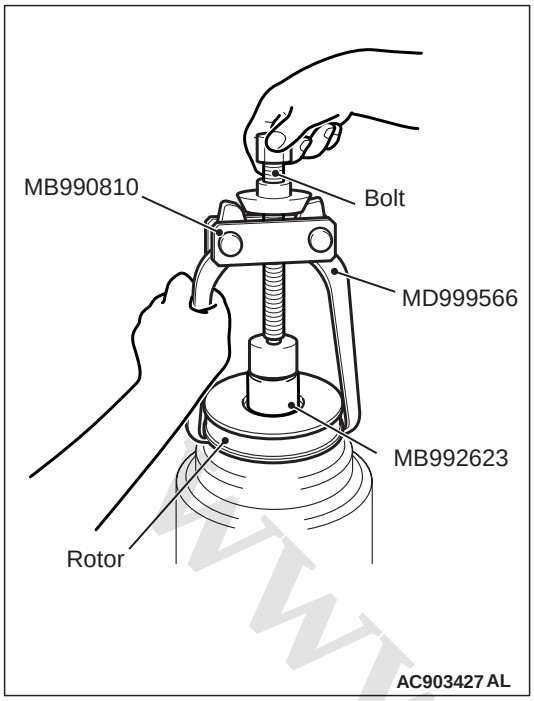

⚠ CAUTION

- **Be sure to use the guide (MB992623) when the side bearing puller (MB990810) is used to prevent the damage of A/C compressor.**
- **If the threaded shaft of side bearing puller (MB990810) is turned than necessary, the rotor may be distorted. Therefore, turn the threaded shaft lightly only by hand without using any tools.**

Rotor can be removed by hand, but if it is difficult to remove it, use the guide (MB992623) and the side bearing puller (MB990810) as shown.

REASSEMBLY SERVICE POINTS

>>A<< A/C COMPRESSOR HIGH PRESSURE RELIEF VALVE INSTALLATION

⚠ CAUTION

Be careful not to damage the O-ring when installing the high-pressure relief valve. Apply the specified refrigerating machine oil the high-pressure relief valve mounting hole before installation

Check that O-ring is installed to the high-pressure relief and use the adjust torque wrench to install the high-pressure relief valve to the main body of the compressor.

>>B<< A/C COMPRESSOR COIL ATTACHMENT

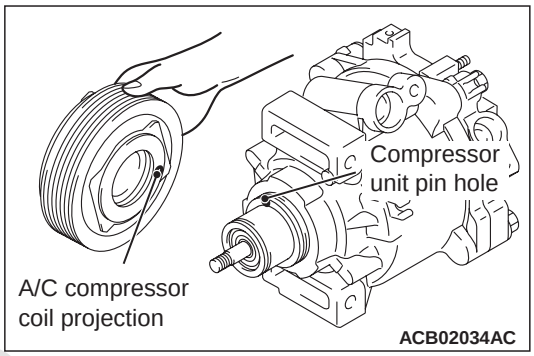

Line up the pin hole on the compressor unit with the A/C compressor coil projection and attach.

www.cargeek.ir

www.CarGeek.ir

>>C<< ROTOR INSTALLATION

⚠ CAUTION

If the outer wheel side of rotor is pushed, an abnormal noise can be generated because the inside of rotor is damaged, therefore, always push the inner wheel side.

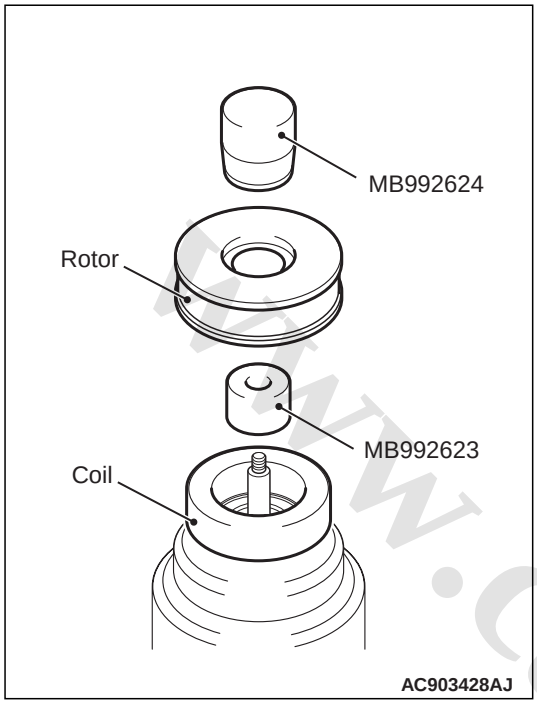

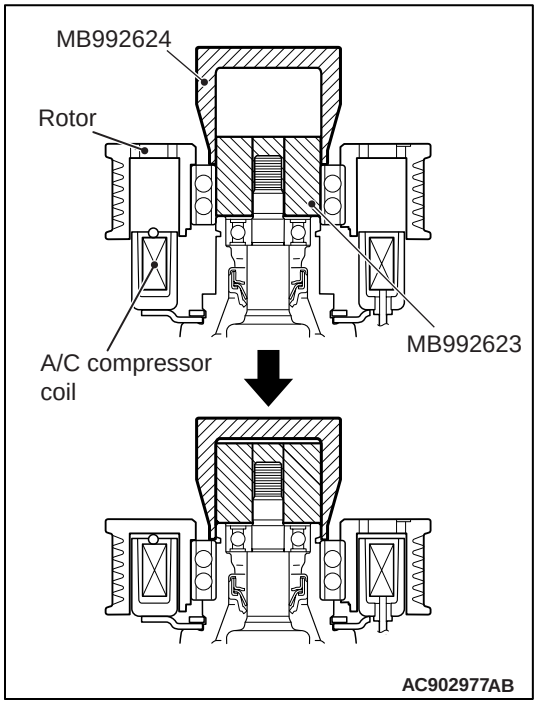

Install the rotor while pushing the inner wheel side slowly using the pusher (MB992624) and guide (MB992623).

NOTE: Insert the rotor in a direction perpendicular to the A/C compressor.

>>D<< SNAP RING INSTALLATION

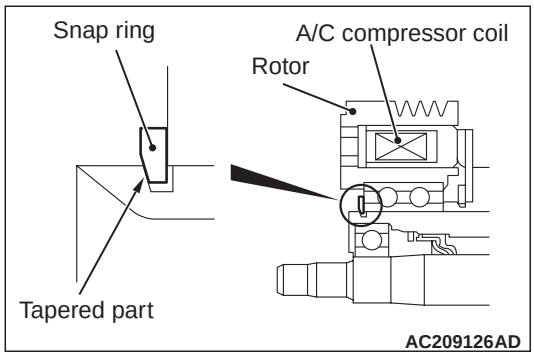

Using snap ring pliers, fit the snap ring so that the snap ring's tapered part is on the outside.

>>E<< SELF-LOCKING NUT INSTALLATION

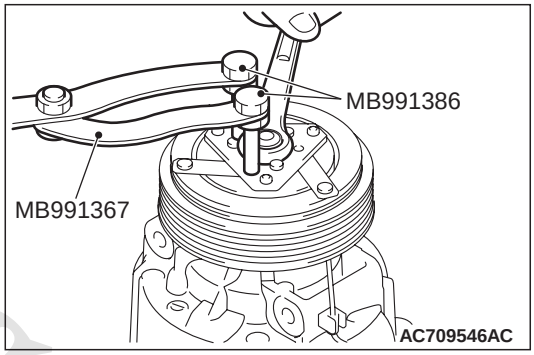

Using a special tool, as when removing the nut, secure the armature and tighten the self-locking nut.

>>F<< AIR GAP ADJUSTMENT

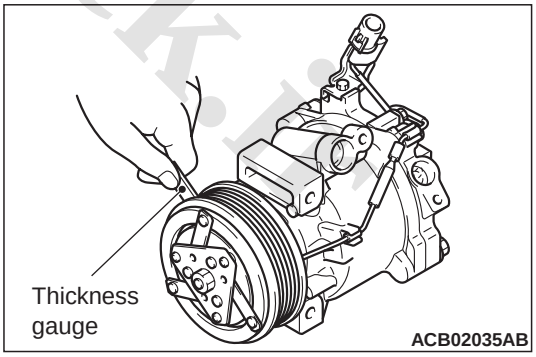

Check whether or not the air gap of the clutch is within the standard value.

Standard value:
0.25 – 0.45 mm

NOTE: If there is a deviation of the air gap from the standard value, make the necessary adjustment by adjusting the number of shims.

www.cargeek.ir

www.CarGeek.ir

DISASSEMBLY AND REASSEMBLY
<Except 1600 (M/T) >

M1552004603517

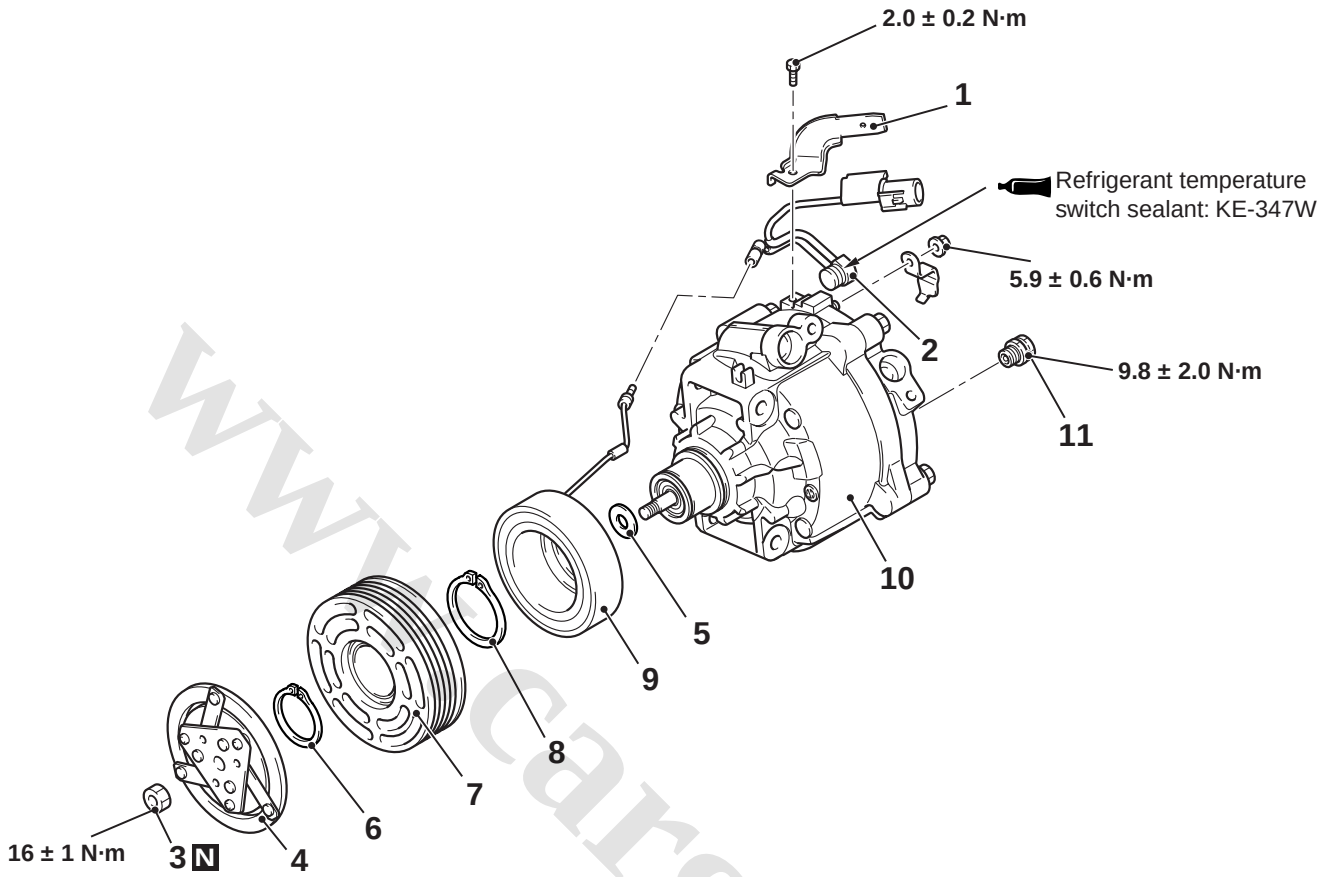

AC808733AC

Refrigerant temperature switch disassembly steps

1. Bracket
2. Refrigerant temperature switch

A/C compressor clutch disassembly steps

>>F<< • Air gap adjustment
<<A>> >>E<< 3. Self-locking nut
4. Armature
5. Shim
>>D<< 6. Snap ring
<<B>> >>C<< 7. Rotor
8. Snap ring
>>B<< 9. A/C compressor coil
10. A/C compressor
>>A<< 11. A/C compressor high pressure relief valve

<<B>> ROTOR REMOVAL

DISASSEMBLY SERVICE POINTS

<<A>> SELF-LOCKING NUT REMOVAL

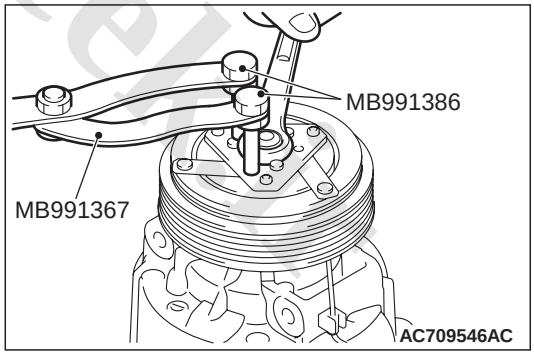

Use the special tools below to remove the self-locking nut.

www.cargeek.ir

www.CarGeek.ir

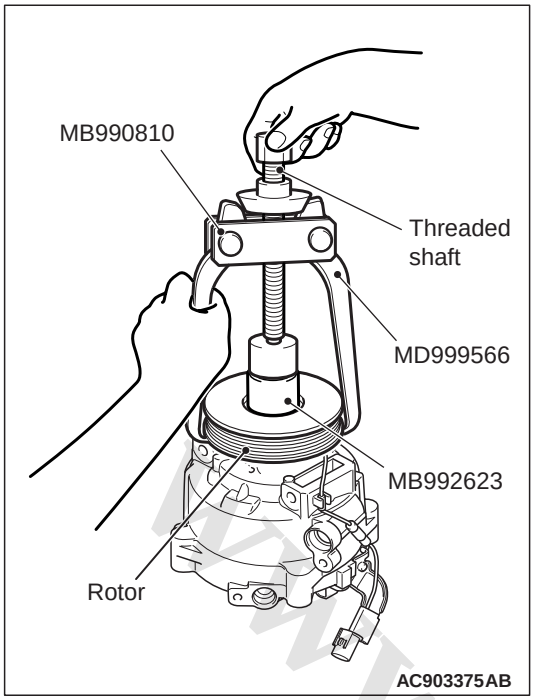

⚠ CAUTION

- **Be sure to use the guide (MB992623) when the side bearing puller (MB990810) is used to prevent the damage of A/C compressor.**
- **If the threaded shaft of side bearing puller (MB990810) is turned than necessary, the rotor may be distorted. Therefore, turn the threaded shaft lightly only by hand without using any tools.**

Rotor can be removed by hand, but if it is difficult to remove it, use the guide (MB992623) and the side bearing puller (MB990810) as shown.

REASSEMBLY SERVICE POINTS

>>A<< A/C COMPRESSOR HIGH PRESSURE RELIEF VALVE INSTALLATION

⚠ CAUTION

Be careful not to damage the O-ring when installing the high-pressure relief valve. Apply the specified refrigerating machine oil the high-pressure relief valve mounting hole before installation

Check that O-ring is installed to the high-pressure relief and use the adjust torque wrench to install the high-pressure relief valve to the main body of the compressor.

>>B<< A/C COMPRESSOR COIL ATTACHMENT

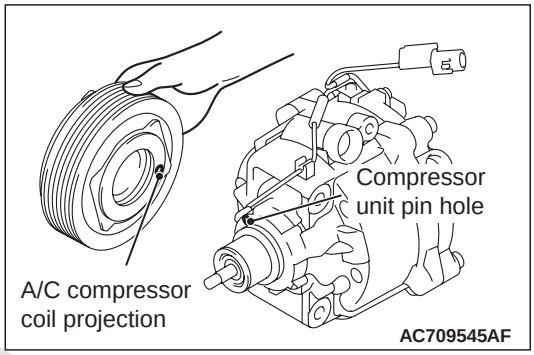

Line up the pin hole on the compressor unit with the A/C compressor coil projection and attach.

www.cargeek.ir

www.CarGeek.ir

>>C<< ROTOR INSTALLATION

⚠ CAUTION

If the outer wheel side of rotor is pushed, an abnormal noise can be generated because the inside of rotor is damaged, therefore, always push the inner wheel side.

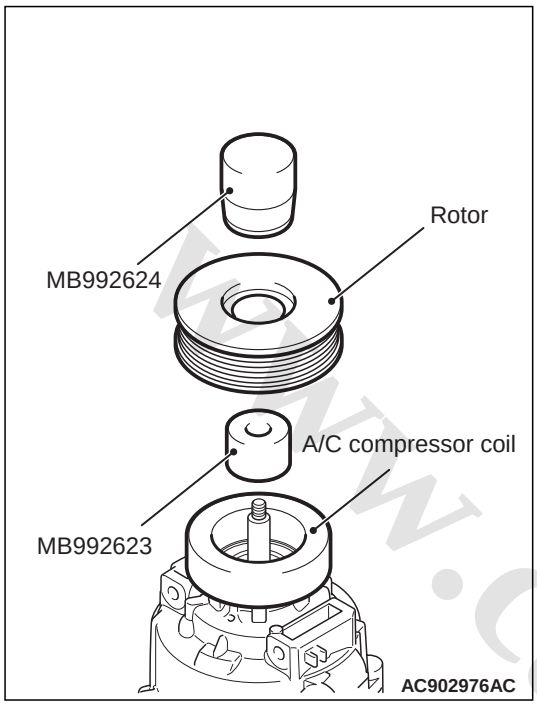

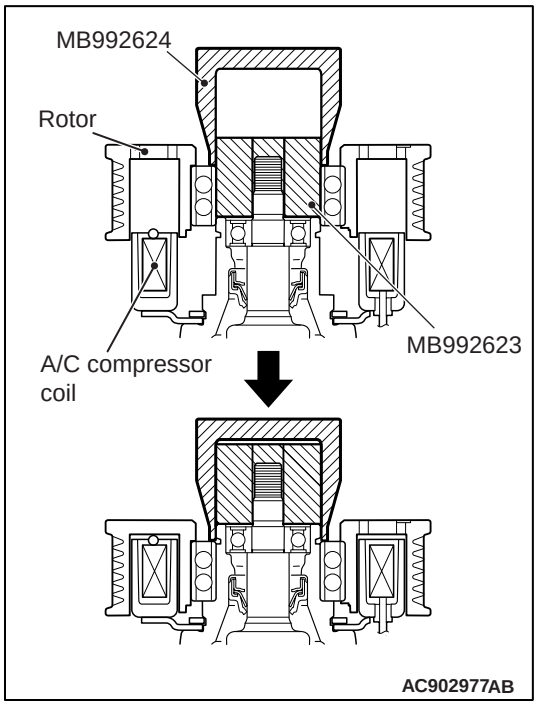

Install the rotor while pushing the inner wheel side slowly using the pusher (MB992624) and guide (MB992623).

NOTE: Insert the rotor in a direction perpendicular to the A/C compressor.

>>D<< SNAP RING INSTALLATION

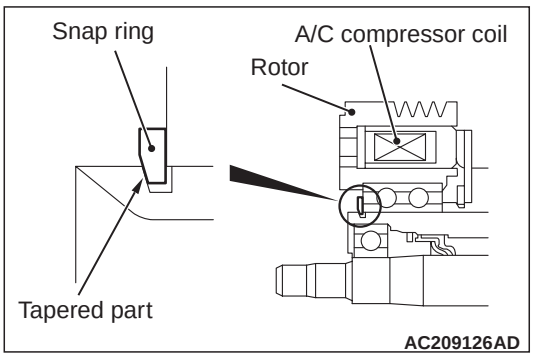

Using snap ring pliers, fit the snap ring so that the snap ring's tapered part is on the outside.

>>E<< SELF-LOCKING NUT INSTALLATION

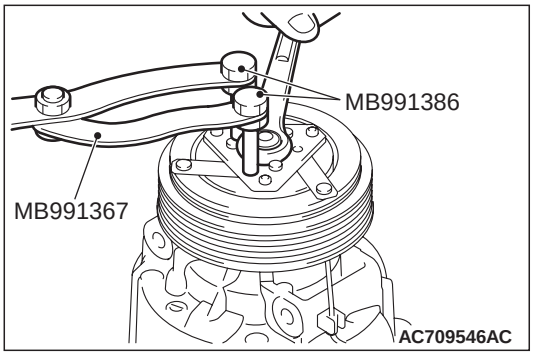

Using a special tool, as when removing the nut, secure the armature and tighten the self-locking nut.

>>F<< AIR GAP ADJUSTMENT

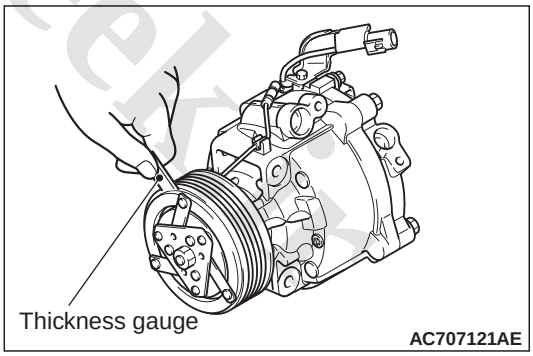

Check whether or not the air gap of the clutch is within the standard value.

Standard value:
0.25 – 0.45 mm

NOTE: If there is a deviation of the air gap from the standard value, make the necessary adjustment by adjusting the number of shims.

INSPECTION

M1552004701217

www.cargeek.ir

www.CarGeek.ir

REFRIGERANT TEMPERATURE SWITCH

⚠ CAUTION

Do not heat than necessary.

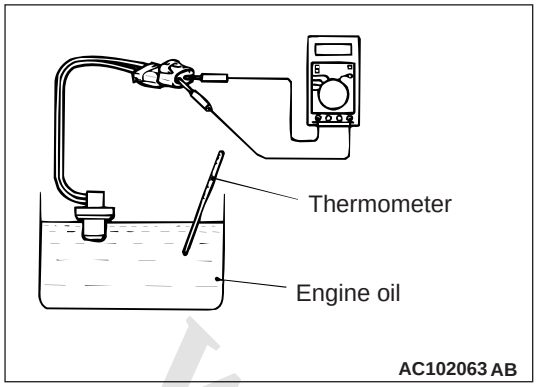

1. Immerse the refrigerant temperature sensor probe into engine oil to heat the sensor probe.

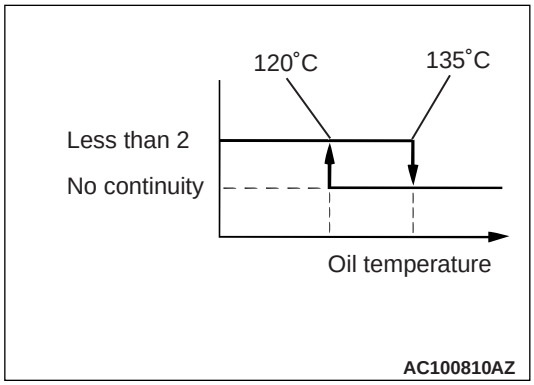

2. If the oil temperature reaches the standard value, there should be continuity between the switch terminals.

   Standard value:

Switch status	Operating temperature °C
Being turned off (No continuity)	135
Being turned on { Continuity exists (2 Ω or less)}	120

NOTE: When the oil temperature is 135℃ or more and there is no continuity, the switch will not be turned on {Continuity exists (2 Ω or less)} until the temperature reduces to 120℃ or less.

www.cargeek.ir

www.CarGeek.ir

CONDENSER ASSEMBLY

REMOVAL AND INSTALLATION

M1552015401577

Pre-removal and Post-installation Operation
- Discharging and Recharging refrigerant (Refer to)
- Air Cleaner Intake Duct Removal and Installation (Refer to GROUP 15 – Air cleaner <4A9>, <4B1, 4J1>, <4N1>).
- Headlamp support panel cover Removal and Installation (Refer to GROUP 51, Front bumper and radiator grille).
- Hood latch Removal and Installation (Refer to GROUP 42A – Hood).

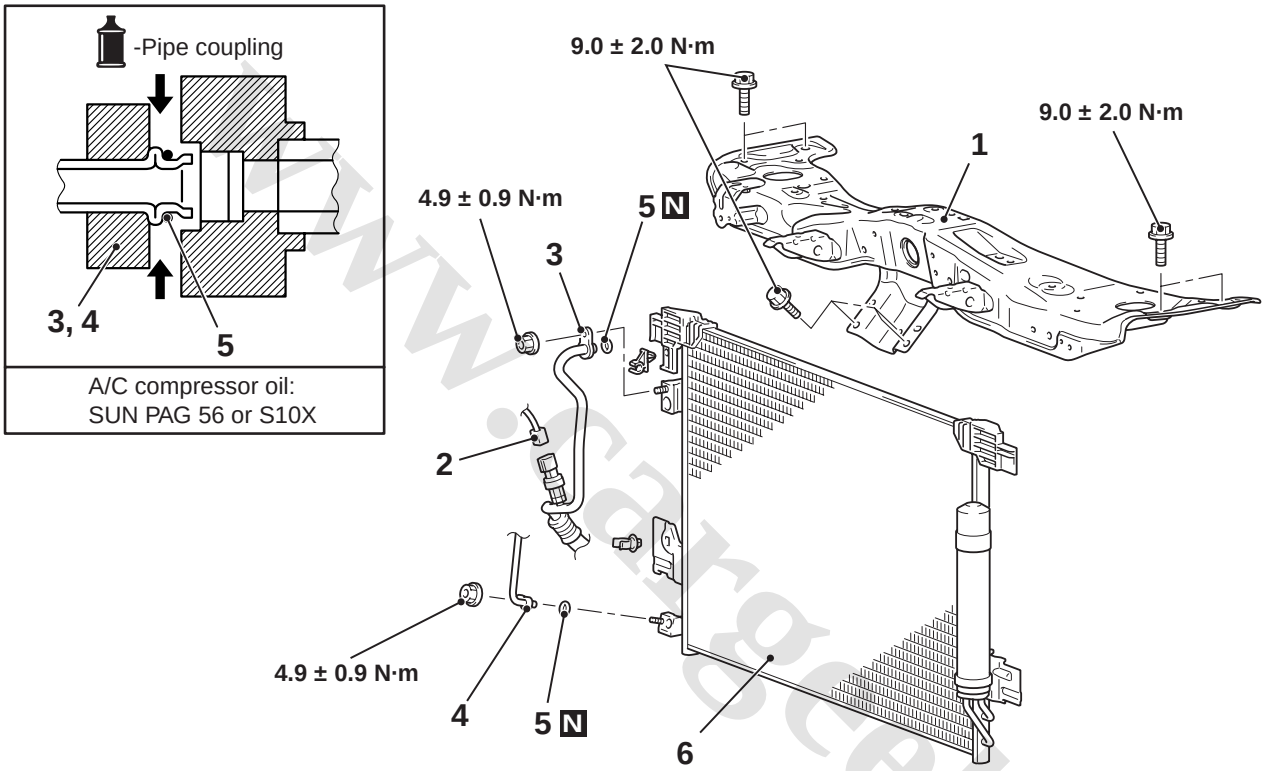

AC900345AB

Removal steps
1. Headlamp support upper panel (Refer to GROUP 42A – Loose panel)
2. A/C pressure sensor connector
3. <<A>> Discharge flexible hose connection
4. <<A>> Liquid pipe A connection
5. O-ring
6. Condenser assembly

NOTE: Condenser fan removal and installation (Refer to GROUP 14 – Radiator <4A9>, <4B1, 4J1>, <4N1>).

REMOVAL SERVICE POINT

<<A>> DISCHARGE FLEXIBLE HOSE/LIQUID PIPE A DISCONNECTION

⚠ CAUTION

Use the plug which is not breathable because A/C compressor oil or receiver have high hygroscopicity.

Plug the removed nipple of the pipe, hose and condenser to prevent the entry of dust and dirt.

www.cargeek.ir

www.CarGeek.ir

REFRIGERANT LINE

REMOVAL AND INSTALLATION <PETROL ENGINE>

M1552006402840

Pre-removal and Post-installation Operation
Discharging and Recharging refrigerant (Refer to)

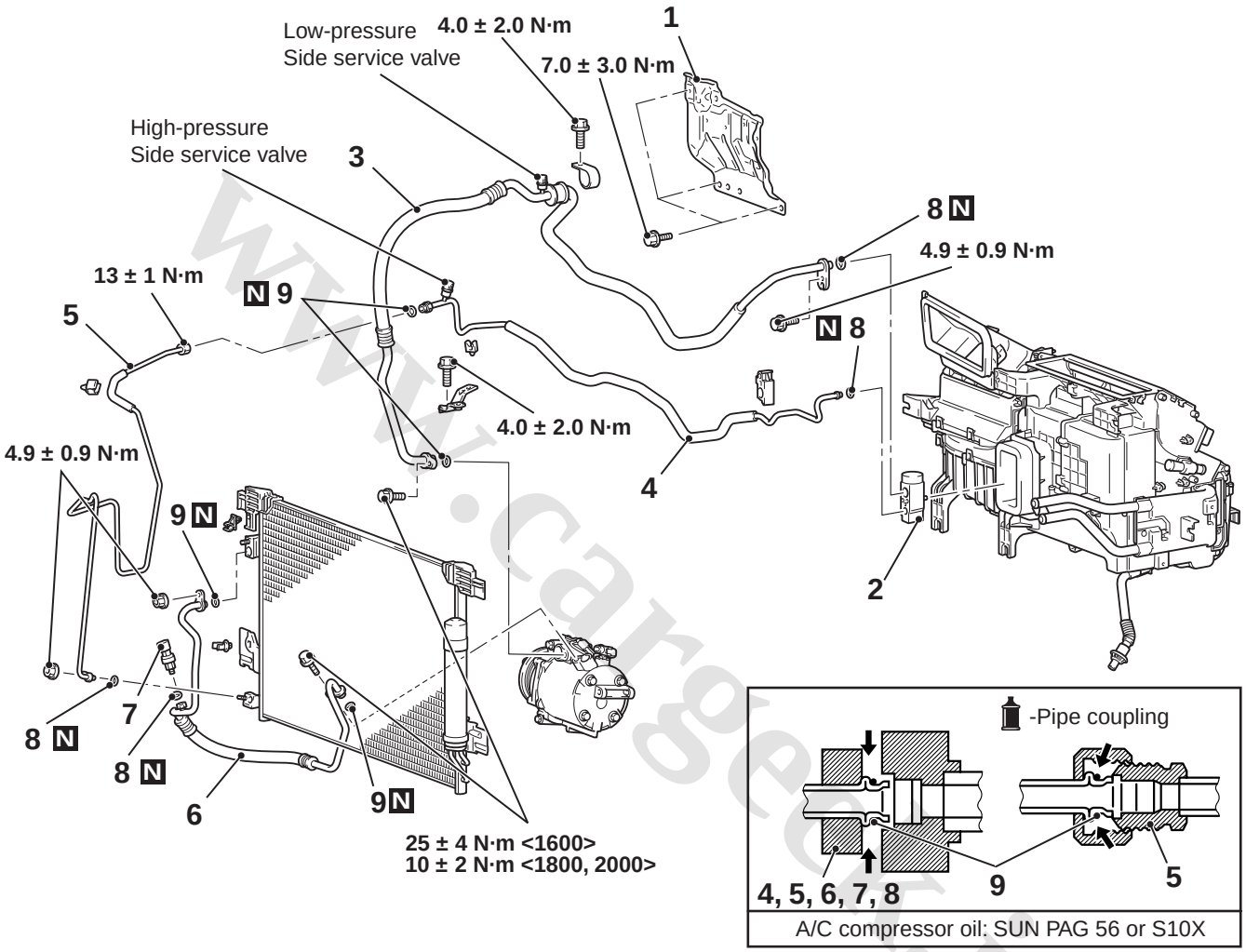

AC900347AF

Expansion valve removal steps

1. Heat protector
<<A>> 2. Expansion valve

Refrigerant line removal steps

<<A>> 3. Flexible suction hose
<<A>> 4. Liquid pipe B
- Air Cleaner Intake Duct Removal and Installation (Refer to GROUP 15 – Air Cleaner <4A9, 4B1, 4J1>)
- Headlamp support panel cover Removal and Installation (Refer to GROUP 51, Front bumper and radiator grille).

<<A>> 5. Liquid pipe A
<<A>> 6. Flexible discharge hose

Refrigerant line removal steps

<<A>> 7. A/C pressure sensor
8. O-ring

REMOVAL SERVICE POINT

<<A>> HOSE AND PIPE REMOVAL

⚠ CAUTION

Use the plug which is not breathable because A/C compressor oil or receiver have high hygroscopicity.

Plug the nipple of condenser, compressor, and expansion valve to prevent the entry of dust and dirt.

www.cargeek.ir

www.CarGeek.ir

REMOVAL AND INSTALLATION <DIESEL ENGINE>

M1552006402862

Pre-removal and Post-installation Operation
Discharging and Recharging refrigerant (Refer to)

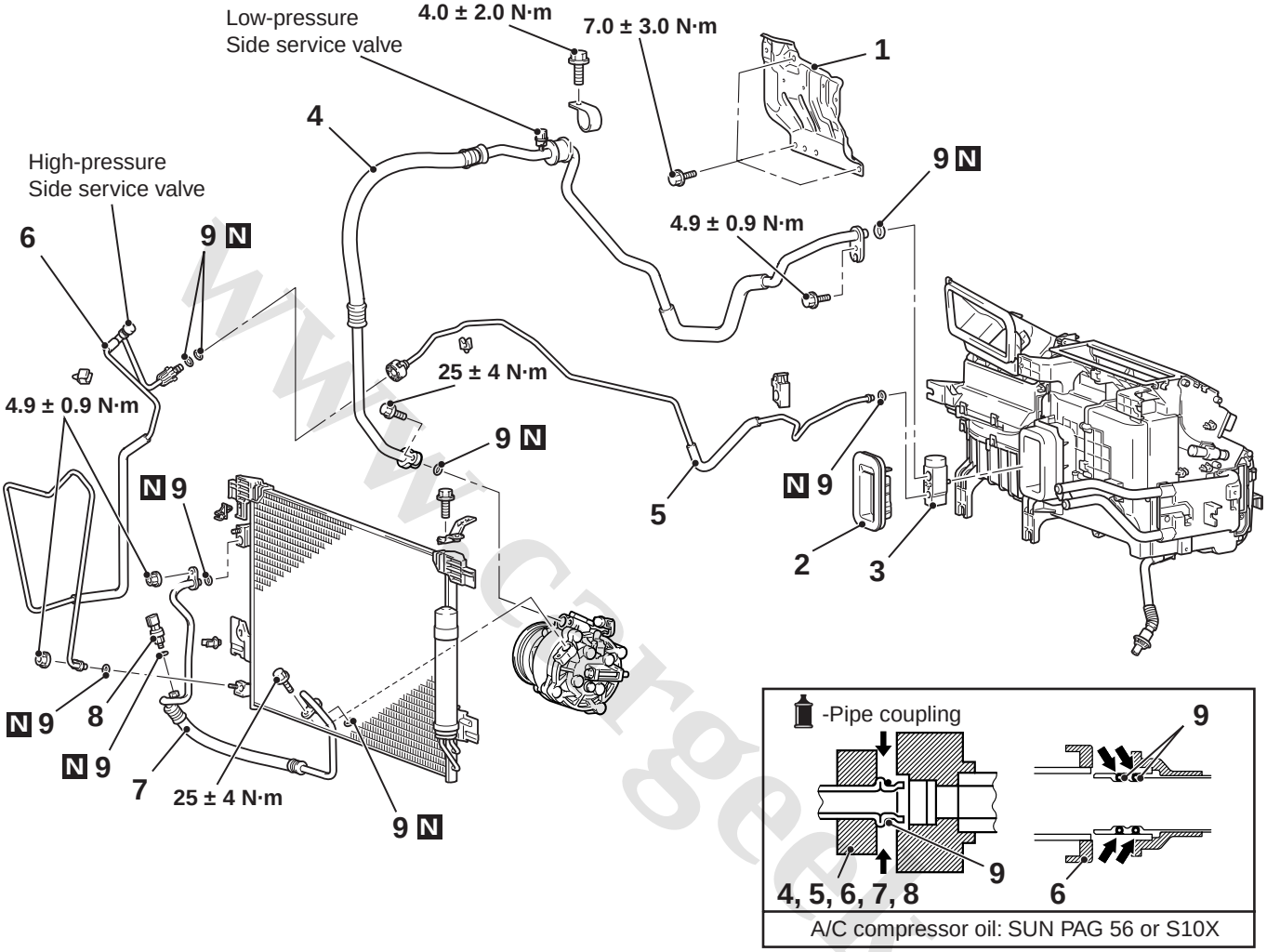

AC900635AB

Expansion valve removal steps

1. Heat protector
2. Expansion valve cover
3. <<A>> Expansion valve

Refrigerant line removal steps

4. <<A>> Flexible suction hose
5. <<B>> >>A<< Liquid pipe B
   - Air Cleaner Intake Duct Removal and Installation (Refer to GROUP 15 – Air cleaner <4N1>).
   - Headlamp support panel cover Removal and Installation (Refer to GROUP 51, Front bumper and radiator grille).
   - Windshield washer tank assembly Removal and Installation (Refer to GROUP 51, Windshield washer).
6. <<B>> >>A<< Liquid pipe A
7. <<A>> Flexible discharge hose
8. <<A>> A/C pressure sensor
9. O-ring

REMOVAL SERVICE POINT

<<A>> HOSE AND PIPE REMOVAL

⚠ CAUTION

Use the plug which is not breathable because A/C compressor oil or receiver have high hygroscopicity.

Plug the nipple of condenser, compressor, and expansion valve to prevent the entry of dust and dirt.

www.cargeek.ir

www.CarGeek.ir

<<B>> PIPE REMOVAL

⚠ CAUTION

Use the plug which is not breathable because A/C compressor oil or receiver have high hygroscopicity.

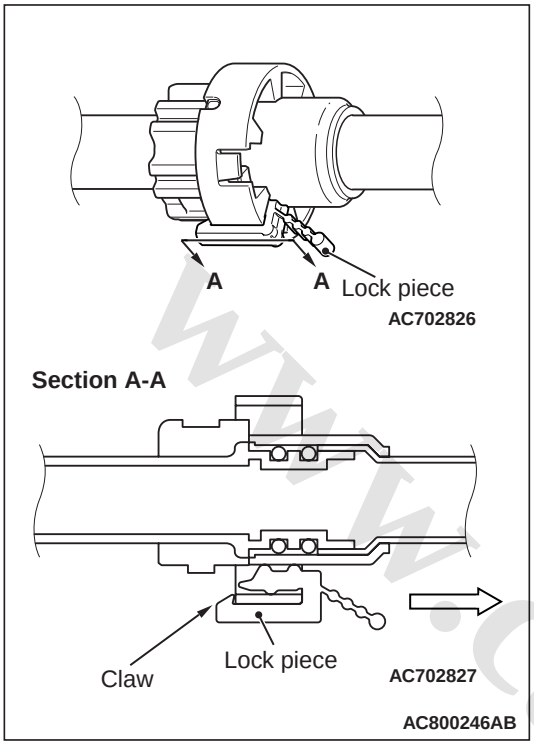

1. Lift the claw of lock piece and pull out to the direction of the arrow shown.

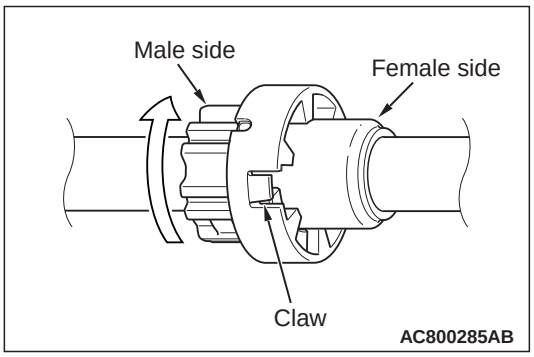

2. Lift the claw of joint and turn the male side to the direction of the arrow to release the lock, and disconnect the pipe.

INSTALLATION SERVICE POINT

>>A<< PIPE INSTALLATION

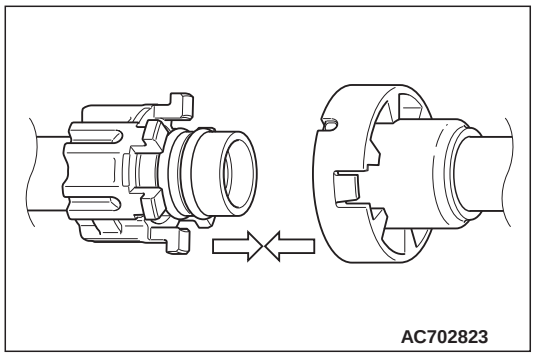

1. Connect the pipe and the joint.

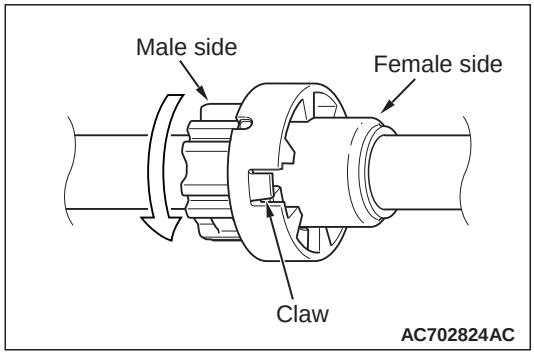

2. Turn the male side to the direction of the arrow to lock.

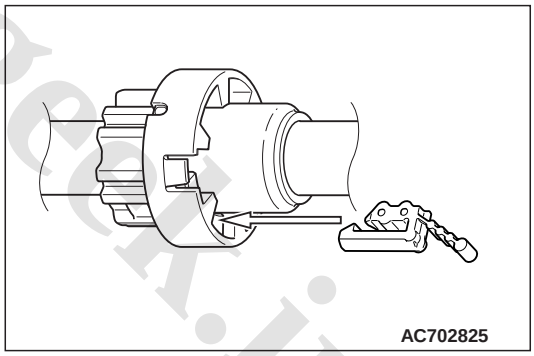

3. Insert the lock piece to prevent the reverse rotation.

   NOTE: Be careful that the colour of lock piece is different depending on the type of piping

www.cargeek.ir

www.CarGeek.ir

DUCTS

REMOVAL AND INSTALLATION

M1553001001007

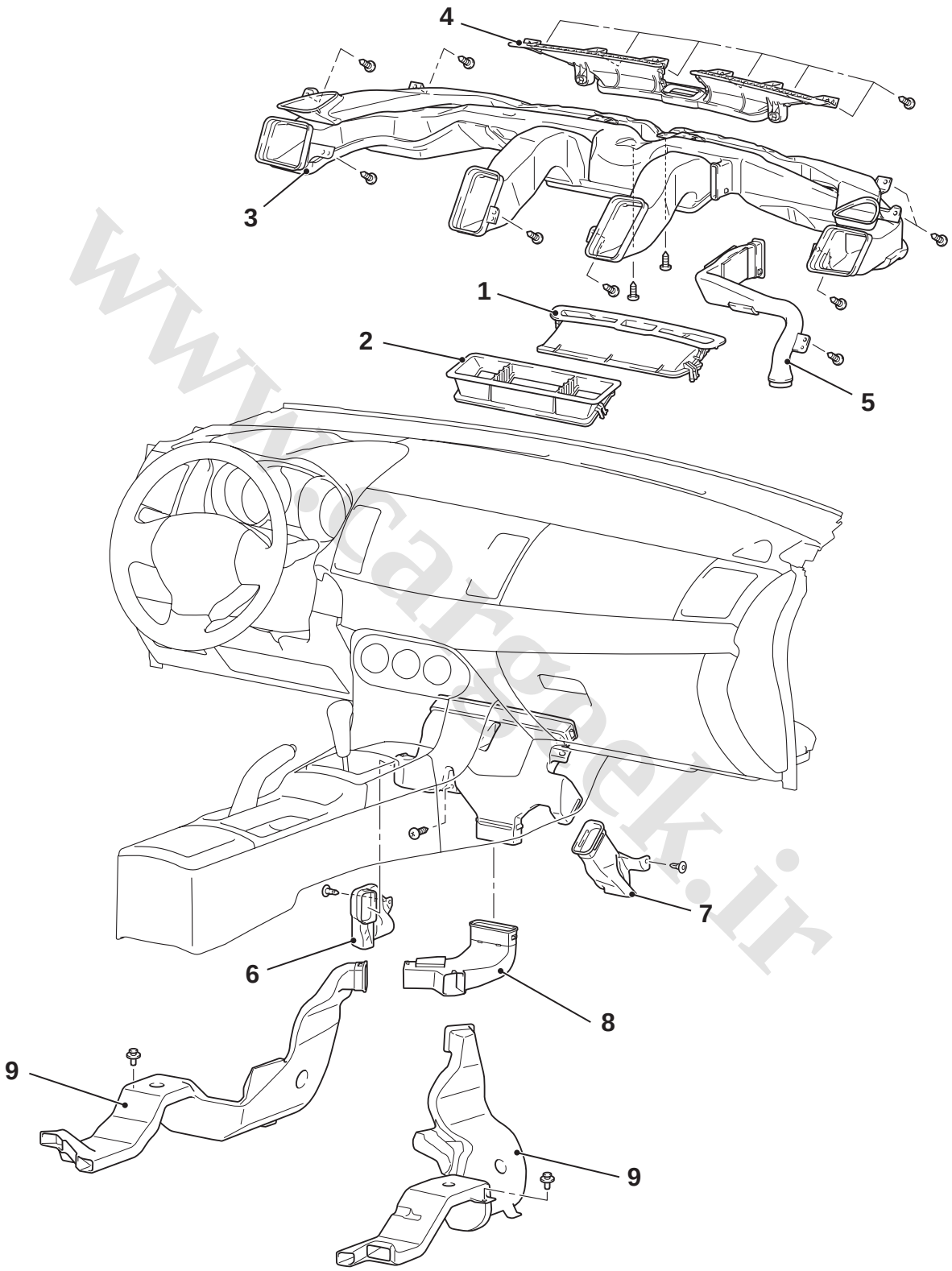

AC800087AB

www.cargeek.ir

www.CarGeek.ir

Removal steps for rear centre duct, front centre duct, side defroster duct, defroster nozzle, ventilation air distribution duct

- Instrument panel assembly (Refer to GROUP 52A – Instrumental Panel).

1. Front centre duct
2. Rear centre duct
3. Ventilation air distribution duct
4. Defroster nozzle

Foot duct removal steps

- Instrument panel lower (Refer to GROUP 52A – Instrument lower panel).

5. Cooler duct
6. Foot duct LH

Foot duct removal steps

- Bottom cover (passenger side), Glove box (Refer to GROUP 52A – Glove box).

7. Foot duct RH

Rear heater duct removal steps

- Floor console assembly (Refer to GROUP 52A – Floor console).
- Instrument panel under cover (Refer to GROUP 52A – Instrument Lower Panel).

8. Rear heater duct A

- Front seat assembly (Refer to GROUP 52A – Front Seat).
- Front scuff plate, Cowl side trim (Refer to GROUP 52A – Trim).
- Turn up the floor carpet.

9. Rear heater duct B

www.cargeek.ir
www.cargeek.ir

www.CarGeek.ir

VENTILATORS

REMOVAL AND INSTALLATION

M1553002800746

Pre-removal and Post-installation Operation
- Rear Bumper Removal and Installation (Refer to GROUP 51 – Rear Bumper).

LANCER

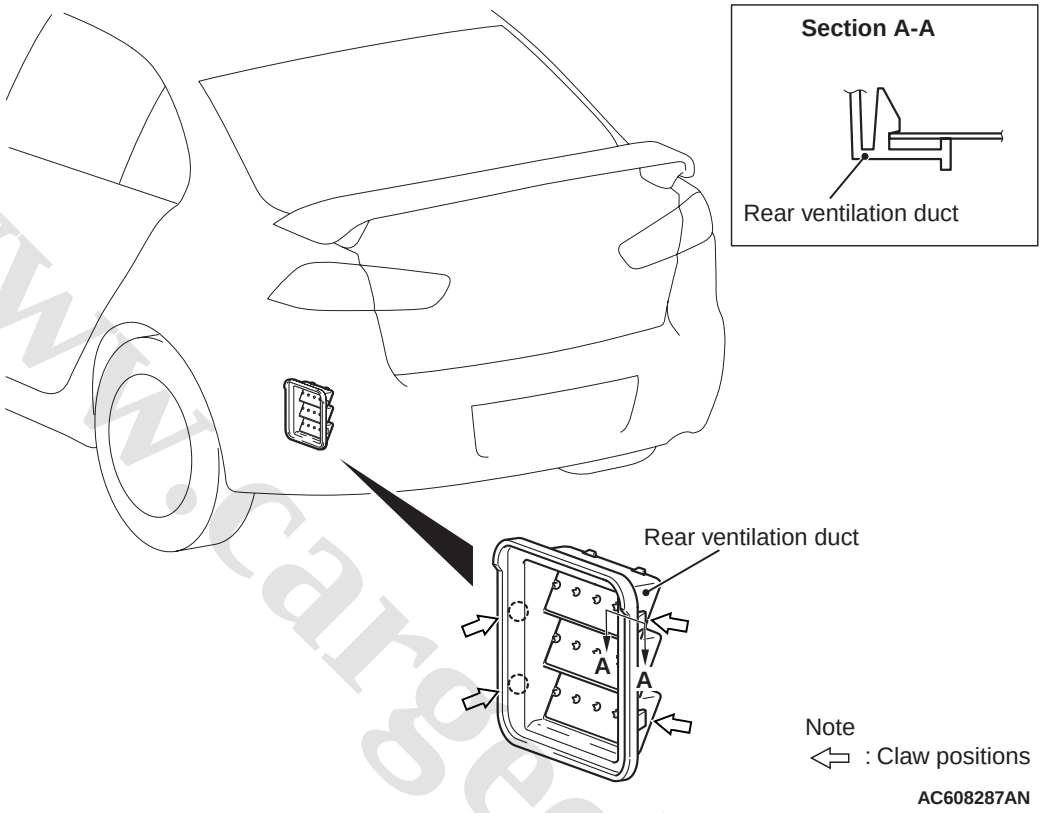

www.cargeek.ir

www.CarGeek.ir

LANCER SPORTBACK

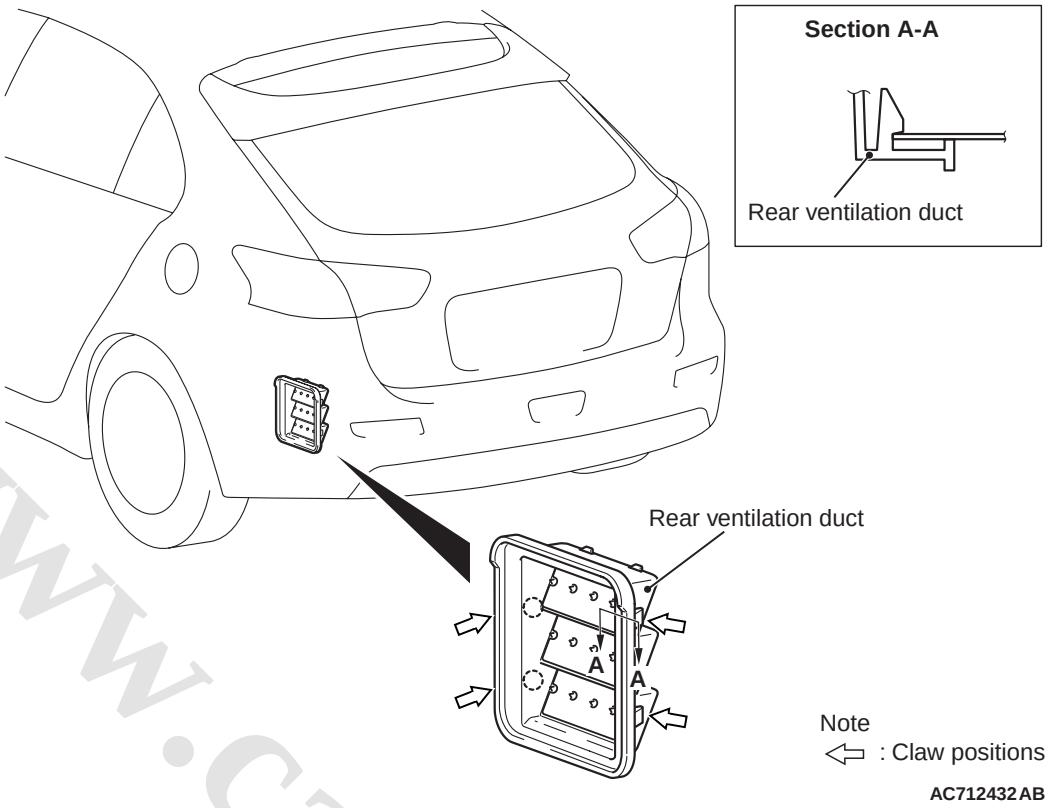

www.cargeek.ir

www.cargeek.ir

www.CarGeek.ir

GROUP 55B

AUTOMATIC AIR CONDITIONER

CONTENTS

TROUBLESHOOTING 55B-2
DIAGNOSIS TROUBLESHOOTING FLOW 55B-2
DIAGNOSIS FUNCTION. 55B-2
DIAGNOSIS CODE CHART 55B-2
DIAGNOSIS CODE PROCEDURES 55B-4
B1034 or B10C0/1 Interior Temperature Sensor System 55B-4
DATA LIST REFERENCE TABLE 55B-5
ACTUATOR TEST REFERENCE TABLE. . 55B-7
CHECK AT ECU TERMINAL. 55B-7

INTERIOR TEMPERATURE SENSOR 55B-9
INTERIOR TEMPERATURE SENSOR REMOVAL AND INSTALLATION 55B-9
INSPECTION. 55B-10

OTHER PARTS. 55B-10
OTHER PART REMOVAL AND INSTALLATION 55B-10

www.cargeek.ir

www.CarGeek.ir

TROUBLESHOOTING

DIAGNOSIS TROUBLESHOOTING FLOW

M1554004700577

Refer to GROUP 00, How to Use Troubleshooting/ Inspection Service Points – Contents of Trouble-shooting

DIAGNOSIS FUNCTION

M1554004800916

READING DIAGNOSIS CODES

Refer to GROUP 00, How to Use Troubleshooting/ Inspection Service Points – Diagnosis Function .

ERASING DIAGNOSIS CODES

Refer to GROUP 00, How to Use Troubleshooting/ Inspection Service Points – Diagnosis Function .

CHECK OF FREEZE FRAME DATA

The freeze frame data can be checked by using the M.U.T.-III.

When detecting fault and storing the diagnosis code, the ECU connected to CAN bus line obtains the data before the determination of the diagnosis code and the data when the diagnosis code is determined, and then stores the ECU status of that time. By analysing each data from M.U.T.-III, the troubleshooting can be performed more efficiently. The displayed items are as the table below.

Display item list

Item No.	Item name	Data item	Unit
1	Odometer	Total driving distance after the diagnosis code is generated	km
2	Ignition cycle	Number of times the ignition switch is turned "ON" or "LOCK (OFF)" after the past failure transition	Number of counts is displayed.
4	Current trouble accumulative time	Cumulative time for current malfunction of diagnosis code	min

DIAGNOSIS CODE CHART

M1554004901972

Code No.	Diagnostic item	Reference page	Service data display contents when diagnosis code is set
B10C0 (set by A/C-ECU)	Interior temperature sensor system (short circuit)		25°C
B10C1 (set by A/C-ECU)	Interior temperature sensor system (open circuit)		

www.cargeek.ir

www.CarGeek.ir

Code No.	Diagnostic item	Reference page	Service data display contents when diagnosis code is set
B1034 (set by ETACS-ECU)	Ambient air temperature sensor system (short circuit)	Refer to GROUP 55A Diagnosis Code Chart	20°C
B1035 (set by ETACS-ECU)	Ambient air temperature sensor system (open circuit)		
B1031	Air thermo sensor system (short circuit)		Air recirculation position: Interior temperature Fresh air position: Fresh air + 10°C
B1032	Air thermo sensor system (open circuit)		
B1000	Control panel communication error		–
B1018	Temperature adjusting SW		–
B1003	Mode changeover SW		–
B1021	Blower fan SW		–
B1079	A/C refrigerant leaks		–
B2214	Control panel failure		–
B1415	Coding incomplete		–
U0019	Bus off (CAN-B)		–
U0141	ETACS-ECU CAN time-out		–
U0151	SRS CAN time-out		–
U0155	Meter CAN time-out		–
U0168	WCM CAN time-out		–
U0184	Audio CAN time-out		–
U0197	Hands Free Module Time-out		–

NOTE: Note that diagnosis code Nos. B1034 and B1035 will be set by the ETACS-ECU separately.

www.cargeek.ir
www.cargeek.ir

www.CarGeek.ir

DIAGNOSIS CODE PROCEDURES

Code No.B10C0: Interior temperature sensor system (short circuit)
Code No.B10C1: Interior temperature sensor system (open circuit)

Interior Temperature Sensor Circuit

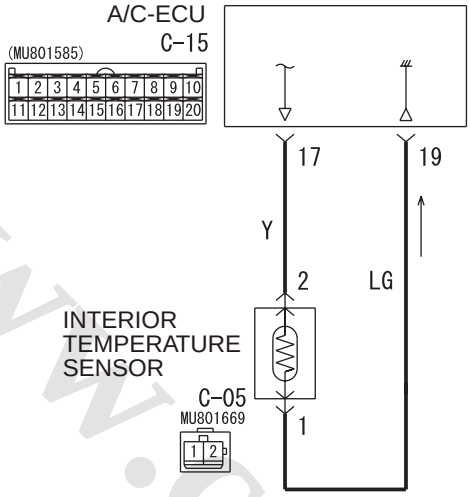

Wire colour code
B : Black LG : Light green G : Green L : Blue W : White Y : Yellow SB : Sky blue
BR : Brown O : Orange GR : Grey R : Red P : Pink V : Violet PU : Purple SI : Silver

ACA00730
W8G55X000A

Connector: C-05 <LHD>

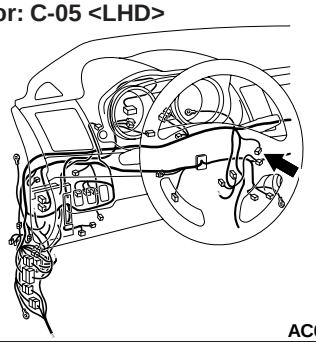

AC612705IV

Connector: C-05 <RHD>

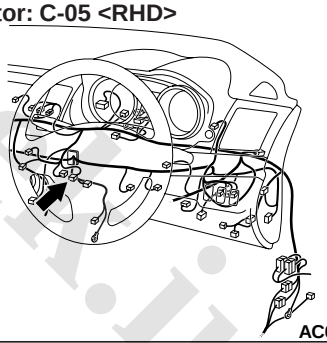

AC612711AJ

Connector: C-15 <LHD>

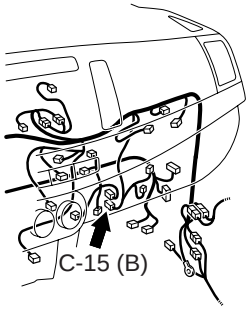

AC612706AK

Connector: C-15 <RHD>

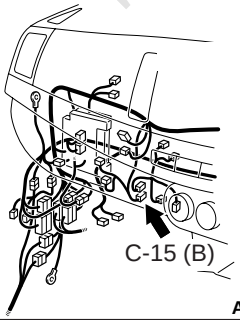

AC612710EO

COMMENTS ON TROUBLE SYMPTOM

This code is set when the interior temperature sensor circuit is short (Code No.B10C0) or is open (Code No.B10C1)

www.cargeek.ir

www.CarGeek.ir

PROBABLE CAUSES

- Malfunction of the interior temperature sensor
- Damaged the wiring harness or connectors
- Malfunction of the A/C-ECU

DIAGNOSIS PROCEDURE

STEP 1. Connector check: C-05 interior temperature sensor connector and C-15 A/C-ECU connector

Q: Is the check result normal?
YES : Go to Step 2.
NO : Repair the connector.

STEP 2. Check the wiring harness between C-15 A/C-ECU connector (terminals 19 and 17) and C-05 interior temperature sensor connector (terminals 1 and 2).

- Check the sensor signal line and earth line for open or short circuit.

Q: Is the check result normal?
YES : Go to Step 3.
NO : Repair the wiring harness.

STEP 3. Check the interior temperature sensor.
Refer to .

Q: Is the check result normal?
YES : Go to Step 4.
NO : Replace the interior temperature sensor.

STEP 4. Check whether the diagnosis code is reset.

Q: Is the diagnosis code set?
YES : Replace the A/C-ECU.
NO : The trouble can be an intermittent malfunction (Refer to GROUP 00, How to Cope with Intermittent Malfunction).

DATA LIST REFERENCE TABLE

M1554005101043

Item No.	Check item	Inspection status	The display contents under normal condition
17	Engine speed	–	Displays correct engine speed.
19	Ambient temperature sensor	–	Ambient temperature is the same as M.U.T.-III displayed temperature
20	Fin thermo sensor	–	Evaporator outlet temperature is the same as M.U.T.-III displayed temperature.
21	Interior temperature sensor	–	Interior temperature is the same as M.U.T.-III displayed temperature
23	Temperature setting		Displays air conditioner set temperature.
24	Engine coolant TEMP sensor	–	Engine coolant temperature is the same as M.U.T.-III displayed temperature.
26	Vehicle speed	–	Displays vehicle speed.
27	A/C Compressor drive request	Compressor ON	ON
		Compressor OFF	OFF
28	Air conditioning switch	Air conditioner switch ON	ON
		Air conditioner switch OFF	OFF
29	Refrigerant leak	–	Normal
34	Idle up request	–	Displays idle-up request signal.

www.cargeek.ir

www.CarGeek.ir

Item No.	Check item	Inspection status	The display contents under normal condition
45	In/out select damper poten (target)	–	Displays outside/inside air selection damper target position.
46	In/out select damp potentiometer	–	Displays outside/inside air selection damper position.
55	Air outlet c/o potentiometer	–	Displays air outlet changeover damper position.
56	Air outlet c/o potentio. (Target)	–	Displays air outlet changeover damper target position.
57	Low pressure	–	Normal
60	Rear defogger switch	Rear window defogger switch ON	ON
		Rear window defogger switch OFF	OFF
61	Pressure sensor	–	Displays refrigerant pressure.
63	Air mix potentiometer	–	Displays the air mix damper position.
68	Front blower fan	–	Displays blower motor condition.
69	Front blower fan (Target)	–	Displays blower motor target value.
73	Refrigerant pressure	–	Displays refrigerant pressure status.
74	Condenser fan	–	Displays condenser fan running condition.
76	Temp. set dial position	–	Displays the set temperature output value on the control panel.
77	A/C Panel type	–	Dial/Auto/RHD
78	Fan set dial position	–	Displays the air volume output value on the control panel.
79	Air outlet c/o set dial position	–	Displays output value to the air outlet changeover dial on the control panel.
80	Fan set dial operation flag	–	ON when the air volume adjusting dial is operated
81	A/C SW operation flag	–	ON when the air conditioner switch is operated
82	Temp. set dial operation flag	–	ON when the air conditioner switch is operated
83	Defogger flag	–	ON when the air outlet changeover dial is set to the DEF position.

www.cargeek.ir

www.CarGeek.ir

Item No.	Check item	Inspection status	The display contents under normal condition
84	In/out air c/o SW operation flag	–	ON when the inside air/ outside air changeover switch is operated
87	Rear defogger SW operation flag	–	ON when the rear window switch is operated
88	Rear defogger SW lamp	–	Displays rear window switch indicator status.
89	A/C SW lamp	–	Displays air conditioner switch indicator status.
90	In/out air c/o SW lamp	–	Displays the status of the inside air/outside air changeover switch indicator.
91	A/C Compressor drive flag	–	ON when the compressor is activated.
92	Wiper operation flag	–	ON when the wiper is operated.
93	Ignition position information	–	Ignition switch position status
94	Power source voltage	–	Displays power supply voltage.
95	IOD fuse equipment flag	–	IOD fuse status

ACTUATOR TEST TABLE

M1554005201181

Item No.	Check item	Driven content
2	Idle up request*	Idle-up request signal
5	In/out selection damper	The moving position of outside/inside air selection damper motor
6	Air mix damper motor	The moving position of air mix damper motor
7	Front blower fan	The amount of blower motor rotation
8	Air outlet c/o dumper	Air outlet changeover damper motor moving position
10	Cooling fan*	The amount of cooling fan rotation
11	Air conditioner*	A/C switch selection position
12	Rear defogger switch*	Rear window defogger switch selection position

*NOTE: *: When the engine is not running these function do not work.*

CHECK AT A/C-ECU TERMINALS

M1552010302653

AC507400AG

www.cargeek.ir

www.CarGeek.ir

Terminal No.	Check item	Check condition	Normal condition
1	Power transistor (DRAIN)	Air volume control dial: Maximum air volume	0 to 2 V
2	Power transistor (GATE)	Air volume control dial: Maximum air volume	System voltage
3 – 8	–	–	–
9	A/C control panel (Signal)	–	–
10 – 12	–	–	–
13	Battery power supply	Always	System voltage
14	Earth	Always	1 V or less
15	IG power supply	Ignition switch: ON	System voltage
16	A/C pressure sensor input	Refer to .	Refer to .
17	Interior temperature sensor	Sensor probe temperature: 25°C (4.0 kΩ)	2.1 to 2.7 V
18	–	–	–
19	Sensor earth	Always	1 V or less
20	A/C pressure sensor power supply	Ignition switch: IG2	5 V
21	Air thermo sensor earth	Always	1 V or less
22	Fin thermo sensor	Sensor probe temperature: 25°C (4.0 kΩ)	2.1 to 2.7 V
23	–	–	–
24	Motor for air outside/inside air circulation switching damper	–	–
25	Motor for air outside/inside air circulation switching damper	–	–
26	Motor for air outside/inside air circulation switching damper	–	–
27	Motor for air outside/inside air circulation switching damper	–	–
28	Air mix damper motor	–	–
29	Motor power supply	–	–
30	Air outlet changeover damper motor	–	–
31	Air outlet changeover damper motor	–	–
32	Air outlet changeover damper motor	–	–
33	Air outlet changeover damper motor	–	–

www.cargeek.ir

Terminal No.	Check item	Check condition	Normal condition
34	Air mix damper motor	–	–
35	Air mix damper motor	–	–
36	Air mix damper motor	–	–

INTERIOR TEMPERATURE SENSOR

REMOVAL AND INSTALLATION

M1554026400455

⚠ WARNING

For removal and installation of the Knee air bag module, always observe the service procedures described in GROUP 52B, Knee air bag module .

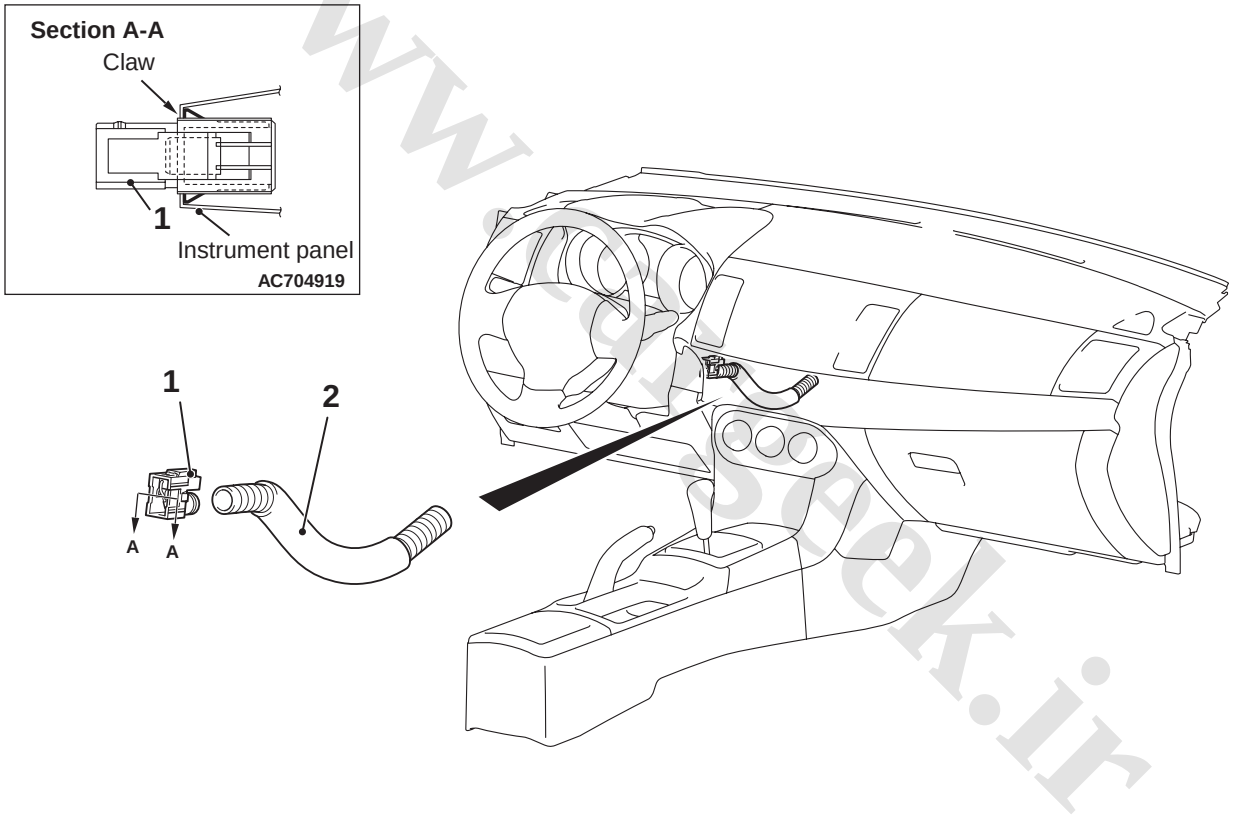

Interior temperature sensor removal steps

- Knee air bag module (Refer to GROUP 52B – Knee air bag module).

Interior temperature sensor removal steps (Continued)

1. Aspirator hose
2. Interior temperature sensor

www.cargeek.ir

www.CarGeek.ir

INSPECTION

M1552014303874

INTERIOR TEMPERATURE SENSOR CHECK

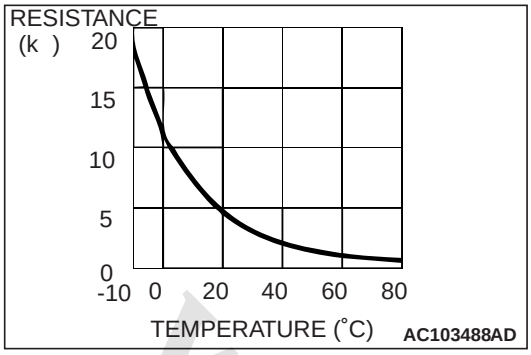

Check to see that the resistance shown in the graph is almost satisfied when measuring the resistance between the terminals under two or more different temperature conditions.

OTHER PARTS

OTHER PARTS MAINTENANCE SERVICE POINTS

M1554004000921

The following maintenance service points are the same as for the manual A/C.

Item		Reference page
On-vehicle service	Refrigerant level check, draining and charging	
	Simple inspection of the a/c pressure sensor	
	Compressor drive belt adjustment	
	Performance test	
	Power relay continuity check	
	Idle-up operation check	
Heater control unit		
Heater unit and blower assembly		
Mode selection damper control motor, air mixing damper control motor, outside/inside air selection damper control motor, blower motor and power transistor		
Ambient air temperature sensor		
A/C-ECU		
PTC heater <Vehicles with PTC heater>		
Compressor assembly <1600 (M/T)>		
Compressor assembly <Except 1600 (M/T) >		
Condenser		
Refrigerant line		
Ducts		
Rear ventilation duct		

www.cargeek.ir