www.CarGeek.ir

# IMPORTANT

## WARNING/CAUTION/NOTE

Please read this manual and follow its instructions carefully. To emphasize special information, the words **⚠ WARNING**, ⚠ **CAUTION** and **NOTE** have special meanings. Pay special attention to the messages highlighted by these signal words.

**⚠ WARNING**

**Indicates a potential hazard that could result in death or injury.**

⚠ **CAUTION**

**Indicates a potential hazard that could result in vehicle damage.**

**NOTE**

**Indicates special information to make maintenance easier or instructions clearer.**

**⚠ WARNING**

**This service manual is intended for authorized Suzuki dealers and qualified service technicians only. Inexperienced technicians or technicians without the proper tools and equipment may not be able to properly perform the services described in this manual.**
**Improper repair may result in injury to the technician and may render the vehicle unsafe for the driver and passengers.**

**⚠ WARNING**

**For vehicles equipped with a Supplemental Restraint (Air Bag) System:**

- **Service on and around the air bag system components or wiring must be performed only by an authorized SUZUKI dealer. Refer to "Air Bag System Components and Wiring Location View" under "General Description" in air bag system section in order to confirm whether you are performing service on or near the air bag system components or wiring. Please observe all WARNINGS and "Service Precautions" under "On-Vehicle Service" in air bag system section before performing service on or around the air bag system components or wiring. Failure to follow WARNINGS could result in unintentional activation of the system or could render the system inoperative. Either of these two conditions may result in severe injury.**
- **If the air bag system and another vehicle system both need repair, Suzuki recommends that the air bag system be repaired first, to help avoid unintended air bag system activation.**
- **Do not modify the steering wheel, instrument panel or any other air bag system component on or around air bag system components or wiring. Modifications can adversely affect air bag system performance and lead to injury.**
- **If the vehicle will be exposed to temperatures over 93 °C (200 °F), for example, during a paint baking process, remove the air bag system components, that is air bag (inflator) modules, SDM and/or seat belt with pretensioner, beforehand to avoid component damage or unintended activation.**

The circle with a slash in this manual means "Don't do this" or "Don't let this happen".

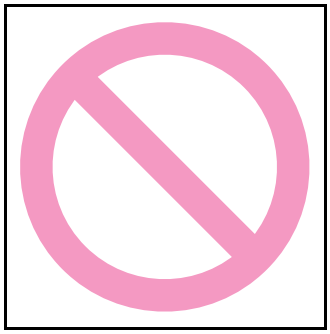

www.cargeek.ir

www.CarGeek.ir

www.cargeek.ir

www.cargeek.ir

www.CarGeek.ir

# FOREWORD

This manual (Volumes 1 and 2) contains procedures for diagnosis, maintenance, adjustments, minor service operations, replacement of components (Service) and for disassembly and assembly of major components (Unit Repair-Overhaul).

VOLUME 1 contains General information, Engine, Suspension, Drive/Axle and Brakes sections (Sections 0 – 4).
VOLUME 2 contains Transmission/Transaxle, Steering, HVAC, Restraint, Body/Cab/Accessories and Control Systems sections (Sections 5 – 10).

**Applicable model:**
**GRAND VITARA (JB416/JB420) vehicles**

The contents are classified into sections each of which is given a section number as indicated in the Table of Contents on following page. And on the first page of each individual section is an index of that section.
This manual should be kept in a handy place for ready reference of the service work.
Strict observance of the so specified items will enable one to obtain the full performance of the vehicle.

When replacing parts or servicing by disassembling, it is recommended to use SUZUKI genuine parts, tools and service materials as specified in each description.

All information, illustrations and specifications contained in this literature are based on the latest product information available at the time of publication approval. And used as the main subject of description is the vehicle of standard specifications among others.
Therefore, note that illustrations may differ from the vehicle being actually serviced.
The right is reserved to make changes at any time without notice.

www.cargeek.ir

**SUZUKI MOTOR CORPORATION**

© COPYRIGHT SUZUKI MOTOR CORPORATION 2005

www.cargeek.ir

www.CarGeek.ir

## RECOMMENDATON OF GENUINE SUZUKI PARTS AND ACCESSORIES USE

SUZUKI strongly recommends the use of genuine SUZUKI parts* and accessories. Genuine SUZUKI parts and accessories are built to the highest standards of quality and performance, and are designed to fit the vehicle's exact specifications.

A wide variety of non-genuine replacement parts and accessories for SUZUKI vehicles are currently available in the market. Using these parts and accessories can affect the vehicle performance and shorten its useful life. Therefore, installation of non-genuine SUZUKI parts and accessories is not covered under warranty.

**Non-Genuine SUZUKI Parts and Accessories**

Some parts and accessories may be approved by certain authorities in your country.
Some parts and accessories are sold as SUZUKI authorized replacement parts and accessories. Some genuine SUZUKI parts and accessories are sold as re-use parts and accessories. These parts and accessories are non-genuine Suzuki parts and accessories and use of these parts are not covered under warranty.

**Re-use of Genuine SUZUKI Parts and Accessories**

The resale or re-use of the following items which could give rise to safety hazards for users is expressly forbidden:

1) Air bag components and all other pyrotechnic items, including their components (e.g. cushion, control devices and sensors)
2) Seatbelt system, including their components (e.g. webbing, buckles, and retractors)

The air bag and seat belt pretensioner components contain explosive chemicals. These components should be removed and disposed of properly by SUZUKI authorized service shop or scrap yard to avoid unintended explosion before scrapping.

*The parts remanufactured under SUZUKI's approval can be used as genuine SUZUKI parts in Europe.

www.cargeek.ir

www.CarGeek.ir

# TABLE OF CONTENTS

## Volume 1


**Precautions ..... 00-i**
Precautions ..... 00-1

**General Information ..... 0-i**
General Information ..... 0A-1
Maintenance and Lubrication ..... 0B-1

**Engine ..... 1-i**
Precautions ..... 1-1
Engine General Information and Diagnosis ..... 1A-1
Aux. Emission Control Devices ..... 1B-1
Engine Electrical Devices ..... 1C-1
Engine Mechanical ..... 1D-1
Engine Lubrication System ..... 1E-1
Engine Cooling System ..... 1F-1
Fuel System ..... 1G-1
Ignition System ..... 1H-1
Starting System ..... 1I-1
Charging System ..... 1J-1
Exhaust System ..... 1K-1

**Suspension ..... 2-i**
Precautions ..... 2-1
Suspension General Diagnosis ..... 2A-1
Front Suspension ..... 2B-1
Rear Suspension ..... 2C-1
Wheels and Tires ..... 2D-1

**Driveline / Axle ..... 3-i**
Precautions ..... 3-1
Drive Shaft / Axle ..... 3A-1
Differential ..... 3B-1
Transfer ..... 3C-1
Propeller Shafts ..... 3D-1

**Brakes ..... 4-i**
Precautions ..... 4-1
Brake Control System and Diagnosis ..... 4A-1
Front Brakes ..... 4B-1
Rear Brakes ..... 4C-1
Parking Brake ..... 4D-1
ABS ..... 4E-1


## Volume 2


**Precautions ..... 00-i**
Precautions ..... 00-1

**Transmission / Transaxle ..... 5-i**
Precautions ..... 5-1
Automatic Transmission/Transaxle ..... 5A-1
Manual Transmission/Transaxle ..... 5B-1
Clutch ..... 5C-1

**Steering ..... 6-i**
Precautions ..... 6-1
Steering General Diagnosis ..... 6A-1
Steering Wheel and Column ..... 6B-1
Power Assisted Steering System ..... 6C-1

**HVAC ..... 7-i**
Precautions ..... 7-1
Heater and Ventilation ..... 7A-1
Air Conditioning System ..... 7B-1

**Restraint ..... 8-i**
Precautions ..... 8-1
Seat Belts ..... 8A-1
Air Bag System ..... 8B-1

**Body, Cab and Accessories ..... 9-i**
Precautions ..... 9-1
Wiring Systems ..... 9A-1
Lighting Systems ..... 9B-1
Instrumentation / Driver Info. / Horn ..... 9C-1
Wipers / Washers ..... 9D-1
Glass / Windows / Mirrors ..... 9E-1
Security and Locks ..... 9F-1
Seats ..... 9G-1
Interior Trim ..... 9H-1
Sun Roof / T-Top / Convertible Top ..... 9I-1
Hood / Fenders / Doors ..... 9J-1
Body Structure ..... 9K-1
Paint / Coatings ..... 9L-1
Exterior Trim ..... 9M-1

**Control systems ..... 10-i**
Precautions ..... 10-1
Cruise Control System ..... 10A-1
Body Electrical Control System ..... 10B-1
Immobilizer Control System ..... 10C-1
Keyless Start System ..... 10E-1




www.cargeek.ir

www.CarGeek.ir

www.cargeek.ir

www.cargeek.ir

www.CarGeek.ir




# Section 00

# Precautions

## CONTENTS

**Precautions ..... 00-1**
**Precautions ..... 00-1**
Precautions for Vehicles Equipped with a Supplemental Restraint (Air Bag) System ..... 00-1
General Precautions ..... 00-4
Precaution in Servicing Full-Time 4WD Vehicle ..... 00-7
Precautions for Catalytic Converter ..... 00-8
Precaution for CAN Communication System ..... 00-9
Precautions for Electrical Circuit Service ..... 00-9
Precautions for Installing Mobile Communication Equipment ..... 00-11
Air Bag Warning ..... 00-11
Discharge Headlight Warning ..... 00-11
A/C System Caution ..... 00-11
Fastener Caution ..... 00-11
Suspension Caution ..... 00-12
Wheels and Tires Caution ..... 00-12
Brakes Caution and Note ..... 00-12
Differential Gear Oil Note ..... 00-12
**Repair Instructions ..... 00-12**
Electrical Circuit Inspection Procedure ..... 00-12
Intermittent and Poor Connection Inspection ..... 00-15

www.cargeek.ir

www.cargeek.ir

www.CarGeek.ir

# Precautions

## Precautions

### Precautions for Vehicles Equipped with a Supplemental Restraint (Air Bag) System

S5JB0A0000001

**⚠ WARNING**

- **The configuration of air bag system parts are as shown in the figure. When it is necessary to service (remove, reinstall and inspect) these parts, be sure to follow procedures described in "Precautions on Service and Diagnosis of Air Bag System: in Section 8B". Failure to follow proper procedures could result in possible air bag system activation, personal injury, damage to parts or air bag system being unable to activate when necessary.**
- **If the air bag system and another vehicle system both need repair, SUZUKI recommends that the air bag system be repaired first, to help avoid unintended air bag system activation.**
- **Do not modify the steering wheel, dashboard, or any other air bag system components.**
  **Modifications can adversely affect air bag system performance and lead to injury.**
- **If the vehicle will be exposed to temperatures over 93 °C (200 °F) (for example, during a paint baking process), remove the air bag system components beforehand to avoid component damage or unintended air bag system activation.**

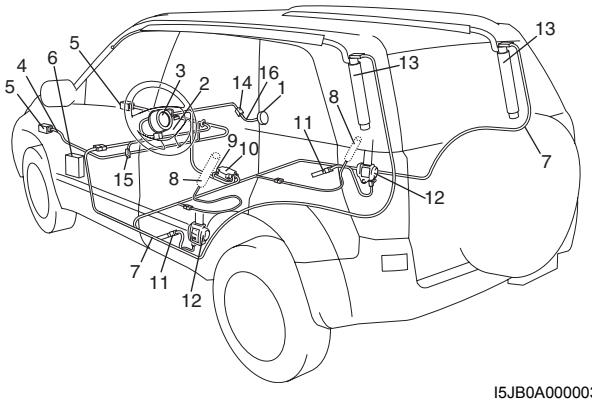


I5JB0A000003-02

| | |
|---|---|
| 1. Passenger air bag (inflator) module | 9. Ground for air bag system |
| 2. Driver air bag (inflator) module | 10. SDM |
| 3. Contact coil assembly | 11. Side-sensor (if equipped) |
| 4. Air bag harness in main harness | 12. Seat belt pretensioner |
| 5. Forward-sensor | 13. Side curtain-air bag (inflator) module (if equipped) |
| 6. "A/B" fuse in junction block assembly | 14. Air bag harness in instrument panel harness |
| 7. Air bag harness in floor harness | 15. "AIR BAG" monitor coupler (if equipped) |
| 8. Side-air bag (inflator) module (if equipped) | 16. Passenger air bag harness |

www.cargeek.ir

www.CarGeek.ir


### Diagnosis

- When troubleshooting air bag system, be sure to follow “Air Bag Diagnostic System Check: in Section 8B”. Bypassing these procedures may result in extended diagnostic time, incorrect diagnosis, and incorrect parts replacement.
- Never use electrical test equipment other than that specified.

**⚠ WARNING**

**Never attempt to measure the resistance of the air bag (inflator) modules (driver, passenger, side and curtain) and seat belt pretensioners (driver and passenger). It is very dangerous as the electric current from the tester may deploy the air bag or activate the pretensioners.**

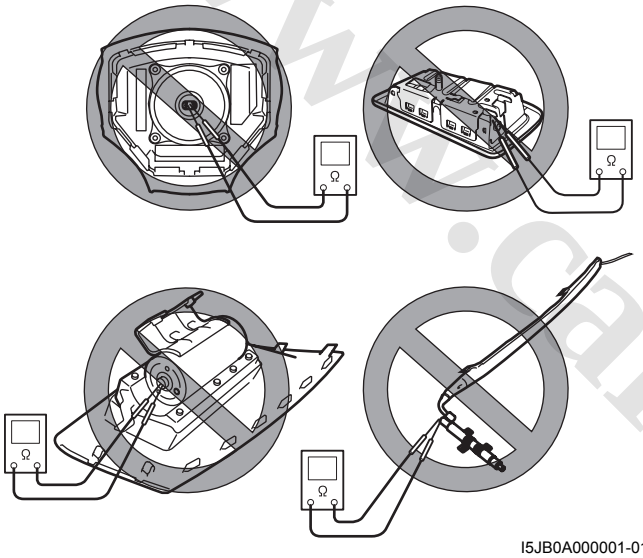


I5JB0A000001-01

### Servicing and Handling

**⚠ WARNING**

**Many of service procedures require disconnection of “A/B” fuse and all air bag (inflator) module(s) from system circuit to avoid an accidental deployment.**
**Driver, Passenger, Side and Curtain Air Bag (Inflator) Modules**

- **For handling and storage of a live air bag (inflator) module, select a place where the ambient temperature below 65 °C (150 °F), without high humidity and away from electric noise.**
- **When carrying a live air bag (inflator) module, make sure the bag opening is pointed away from you. In case of an accidental deployment, the bag will then deploy with minimal chance of injury. Never carry the air bag (inflator) module by the wires or connector on the underside of the module. When placing a live air bag (inflator) module on a bench or other surface, always face the bag up, away from the surface. This is necessary so that a free space is provided to allow the air bag to expand in the unlikely event of accidental deployment. Otherwise, personal injury may result.**

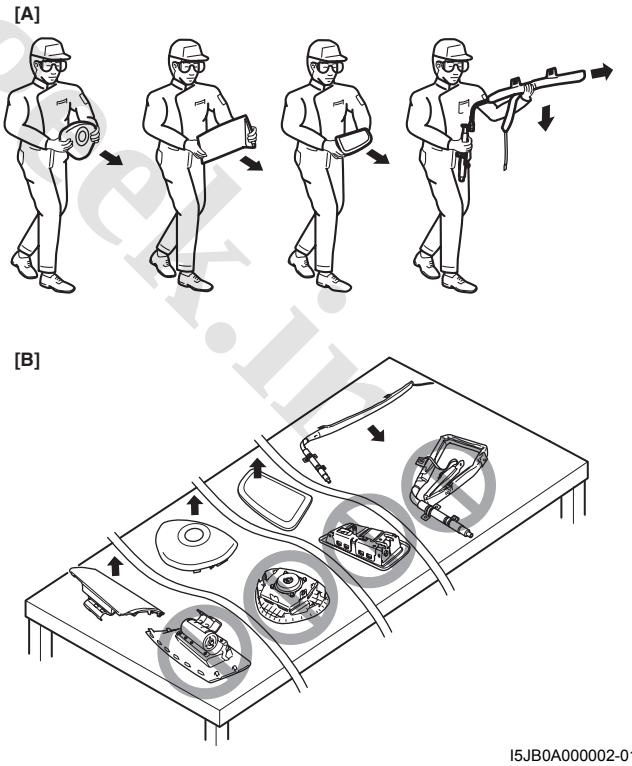


I5JB0A000002-01

| | |
|---|---|
| [A]: | Always carry air bag (inflator) module with trim cover (air bag opening) away from body. |
| [B]: | Always place air bag (inflator) module on workbench with trim cover (air bag opening) up, away from loose objects. |

www.cargeek.ir

www.CarGeek.ir

- Never dispose of live (undeployed) air bag (inflator) modules (driver, passenger, side and curtain). If disposal is necessary, be sure to deploy them according to deployment procedures described in “Air Bag (Inflator) Module and Seat Belt Pretensioner Disposal: in Section 8B”.
- The air bag (inflator) module immediately after deployment is very hot. Wait for at least half an hour to cool it off before proceeding the work.
- After an air bag (inflator) module has been deployed, the surface of the air bag may contain a powdery residue. This powder consists primarily of cornstarch (used to lubricate the bag as it inflates) and by-products of the chemical reaction. As with many service procedures, gloves and safety glasses should be worn.

**⚠ WARNING**

**SDM**

- During service procedures, be very careful when handling a Sensing and Diagnostic Module (SDM).
- Never strike or jar the SDM.
- Never power up the air bag system when the SDM is not rigidly attached to the vehicle. All SDM and mounting bracket fasteners must be carefully torqued and the arrow must be pointing toward the front of the vehicle to ensure proper operation of the air bag system.
  The SDM could be activated when powered while not rigidly attached to the vehicle which could cause deployment and result in personal injury.

**⚠ WARNING**

**Driver and Passenger Seat Belt Pretensioners**

- For handling and storage of a live seat belt pretensioner, select a place where the ambient temperature below 65 °C (150 °F), without high humidity and away from electric noise.
- Never carry seat belt pretensioner by wire or connector of pretensioner. When placing a live seat belt pretensioner on the workbench or some place like that, be sure not to lay it with its exhaust hole (1) provided side facing down. It is also prohibited to put something on its face with an exhaust hole or to put a seat belt pretensioner on top of another. Otherwise, personal injury may result.
- Never dispose of live (inactivated) seat belt pretensioners (drive and passenger). If disposal is necessary, be sure to activate them according to activation procedures described in “Air Bag (Inflator) Module and Seat Belt Pretensioner Disposal: in Section 8B” before disposal.
- The seat belt pretensioner immediately after activation is very hot. Wait for at least half an hour to cool it off before proceeding the work.
- With many service procedures, gloves and safety glasses should be worn to prevent any possible irritation of the skin or eyes.

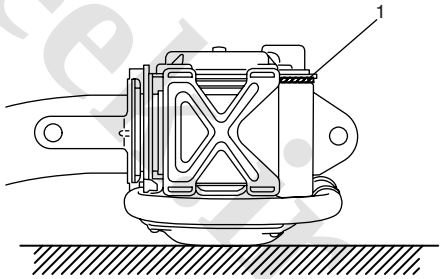

I4JA01822118-01

www.cargeek.ir

www.CarGeek.ir


⚠ **CAUTION**

- **Even when the accident was light enough not to cause air bags to activate, be sure to inspect system parts and other related parts according to instructions under "Repair and Inspection Required after Accident: in Section 8B".**
- **When servicing parts other than air bag system, if shocks may be applied to air bag system component parts, remove those parts beforehand.**
- **When handling the air bag (inflator) modules (driver, passenger, side and curtain), forward sensors, side sensors or SDM, be careful not to drop it or apply an impact to it. If an excessive impact was applied (e.g., dropped from a height of 91.4 cm (3 feet) or more), never attempt disassembly or repair but replace it with a new one.**
- **When grease, cleaning agent, oil, water, etc. has got onto air bag (inflator) modules (driver, passenger, side and curtain), wipe off immediately with a dry cloth.**
- **Air bag wire harness is included in main harness, instrument panel harness, floor harness and seat harness. Air bag wire harness can be identified easily as the part of connector side wire harness is covered with a yellow protection tube and it has yellow connectors. Be very careful when handling it.**
- **When an open in air bag wire harness, damaged wire harness, connector or terminal is found, replace wire harness, connectors and terminals as an assembly.**
- **Do not apply power to the air bag system unless all components are connected or a diagnostic flow requests it, as this will set a DTC.**
- **Never use air bag system component parts from another vehicle.**
- **When using electric welding, be sure to temporarily disable air bag system referring to "Disabling Air Bag System: in Section 8B".**
- **Never expose air bag system component parts directly to hot air (drying or baking the vehicle after painting) or flames.**
- **WARNING / CAUTION labels are attached on each part of air bag system components. Be sure to follow the instructions.**
- **After vehicle is completely repaired, perform "Air Bag Diagnostic System Check: in Section 8B".**

## General Precautions

S5JB0A0000002

The WARNING and CAUTION describe some general precautions that you should observe when servicing a vehicle. These general precautions apply to many of the service procedures, and they will not necessarily be repeated with each procedure to which they apply.

**⚠ WARNING**

- **Whenever raising a vehicle for service, be sure to follow the instructions under "Vehicle Lifting Points: in Section 0A".**
- **When it is necessary to do service work with the engine running, make sure that the parking brake is set fully and the transmission is in Neutral (for manual transmission vehicles) or Park (for automatic transmission vehicles), Keep hands, hair, clothing, tools, etc. away from the fan and belts when the engine is running.**
- **When it is necessary to run the engine indoors, make sure that the exhaust gas is forced outdoors.**
- **Do not perform service work in areas where combustible materials can come in contact with a hot exhaust system. When working with toxic or flammable materials (such as gasoline and refrigerant), make sure that the area you work in is well-ventilated.**
- **To avoid getting burned, keep away from hot metal parts such as the radiator, exhaust manifold, tail pipe, muffler, etc.**
- **New and used engine oil can be hazardous. Children and pets may be harmed by swallowing new or used oil. Keep new and used oil and used engine oil filters away from children and pets. Continuous contact with used engine oil has been found to cause [skin] cancer in laboratory animals. Brief contact with used oil may irritate skin. To minimize your exposure to used engine oil, wear a long-sleeve shirt and moisture-proof gloves (such as dish washing gloves) when changing engine oil. If engine oil contacts your skin, wash thoroughly with soap and water. Launder any clothing or rags if wet with oil, recycle or properly dispose of used oil and filters.**
- **Make sure the bonnet is fully closed and latched before driving. If it is not, it can fly up unexpectedly during driving, obstructing your view and resulting in an accident.**

www.cargeek.ir

www.CarGeek.ir

⚠ **CAUTION**

- **Before starting any service work, cover fenders, seats and any other parts that are likely to get scratched or stained during servicing. Also, be aware that what you wear (e.g. buttons) may cause damage to the vehicle's finish.**

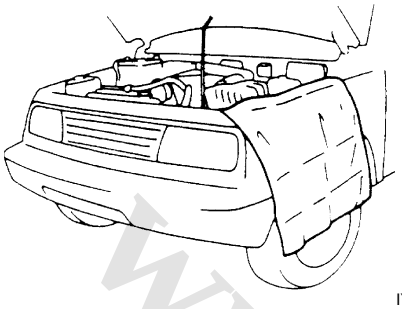

IYSQ01010004-01

- **When performing service to electrical parts that does not require use of battery power, disconnect the negative cable of the battery.**
- **When disconnecting the negative cable from the battery, be careful to the following.**
  - **Check and record DTCs in ECM, PS control module and/or immobilizer control module if necessary before disconnecting.**
  - **Record displayed contents of the clock and/or audio system, etc. before disconnecting and reset it as before after connecting.**
  - **For vehicle equipped with electric throttle body system, perform electric throttle body system calibration referring to "Electric Throttle Body System Calibration: in Section 1C" after reconnecting the negative cable to the battery.**
  - **For vehicle equipped with power sliding roof (sunroof), initialize sliding roof position data in motor unit by performing "How to reactivate the system to prevent being pinched by the sunroof" in Sunroof section of Owner's manual.**

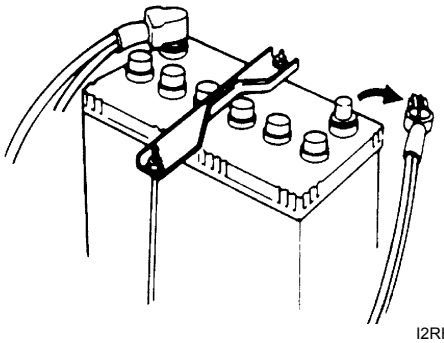

I2RH01010026-01

- **When removing the battery, be sure to disconnect the negative cable first and then the positive cable. When reconnecting the battery, connect the positive cable first and then the negative cable, and replace the terminal cover.**

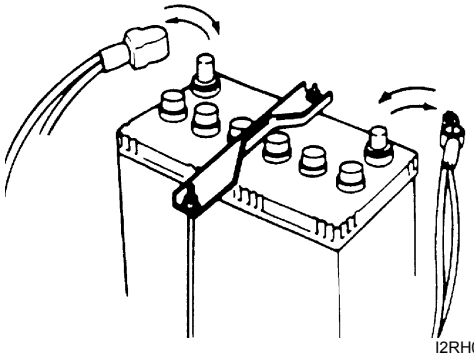

I2RH01010027-01

- **When removing parts that are to be reused, be sure to keep them arranged in an orderly manner so that they may be reinstalled in the proper order and position.**

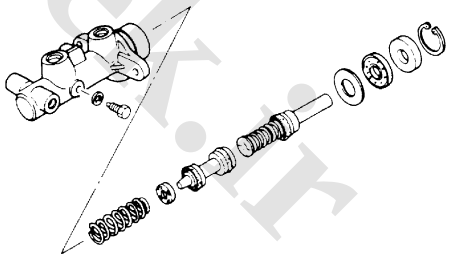

I2RH01010028-01

www.cargeek.ir

www.CarGeek.ir


- **Whenever you use oil seals, gaskets, packing, O-rings, locking washers, split pins, self-locking nuts, and certain other parts as specified, be sure to use new ones. Also, before installing new gaskets, packing, etc., be sure to remove any residual material from the mating surfaces.**

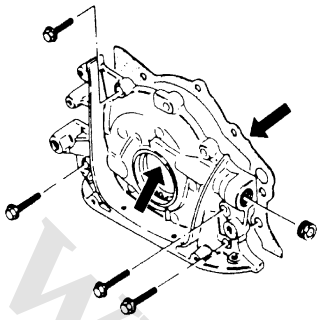

I2RH01010029-01

- **Make sure that all parts used in reassembly are perfectly clean.**
- **When use of a certain type of lubricant, bond or sealant is specified, be sure to remove the old one thoroughly and use the specified type.**

  **"A": Sealant 99000–31150 (SUZUKI Bond No.1207C)**

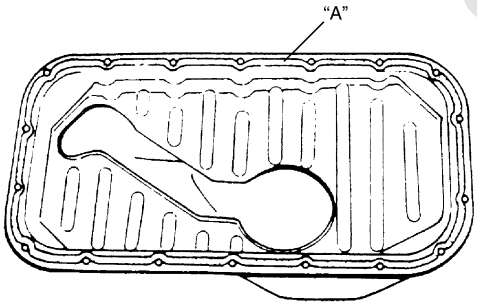


I2RH01010030-01

- **Be sure to use special tools when instructed.**

  **Special tool**
  **(A): 09917–98221**
  **(B): 09916–58210**

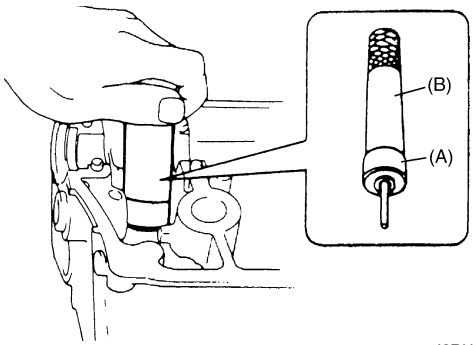


I2RH01010031-01

- **When disconnecting vacuum hoses, attach a tag describing the correct installation positions so that the hoses can be reinstalled correctly.**

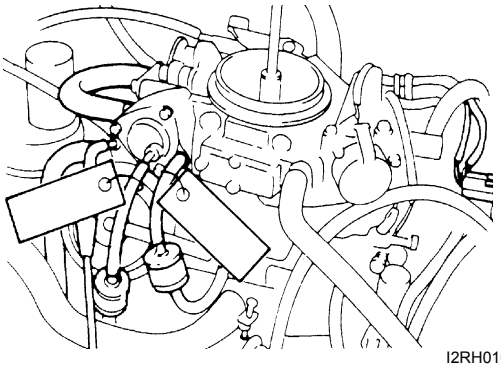

I2RH01010032-01

- **After servicing fuel, oil, coolant, vacuum, exhaust or brake systems, check all lines related to the system for leaks.**

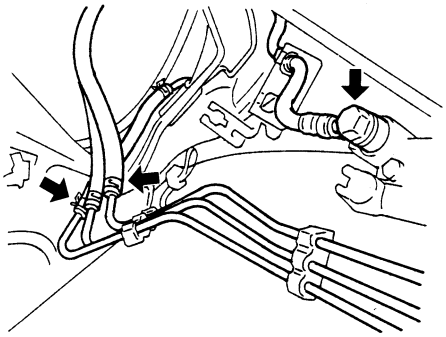

I2RH01010033-01

- **For vehicles equipped with fuel injection systems, never disconnect the fuel line between the fuel pump and injector without first releasing the fuel pressure, or fuel can be sprayed out under pressure.**
- **When performing a work that produces a heat exceeding 80 °C in the vicinity of the electrical parts, remove the heat sensitive electrical part(s) beforehand.**

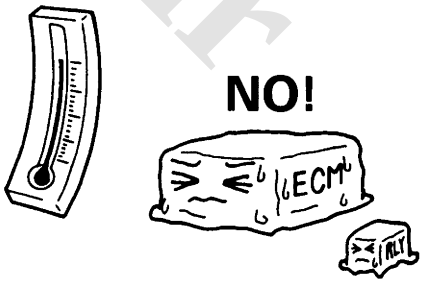


I2RH01010034-01

www.cargeek.ir

www.CarGeek.ir

- **Use care not to expose connectors and electrical parts to water which will be a cause of a trouble.**

I2RH01010035-01

- **Always be careful not to handle electrical parts (computer, relay, etc.) in a rough manner or drop them.**

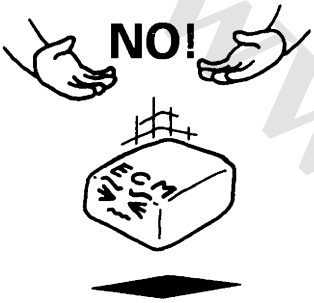


I2RH01010036-01

## Precaution in Servicing Full-Time 4WD Vehicle

S5JB0A0000018

**⚠ WARNING**

**This full-time 4WD vehicle can not be converted to 2WD manually.**
**Observe the following caution in servicing. Otherwise, front wheels drive rear wheels or vise-versa and vehicle accidents, drivetrain damage and personal injury may result.**

- **Never perform any of the following types of service work.**
  **[A]:**
  **Testing with 2-wheel chassis dynamometer or speedometer tester (which tester roller is driven by vehicle wheels).**
  **[B]:**
  **Driving front or rear wheels, which are jacked up.**
  **[C]:**
  **Towing under the condition where either front or rear wheels can not rotate.**

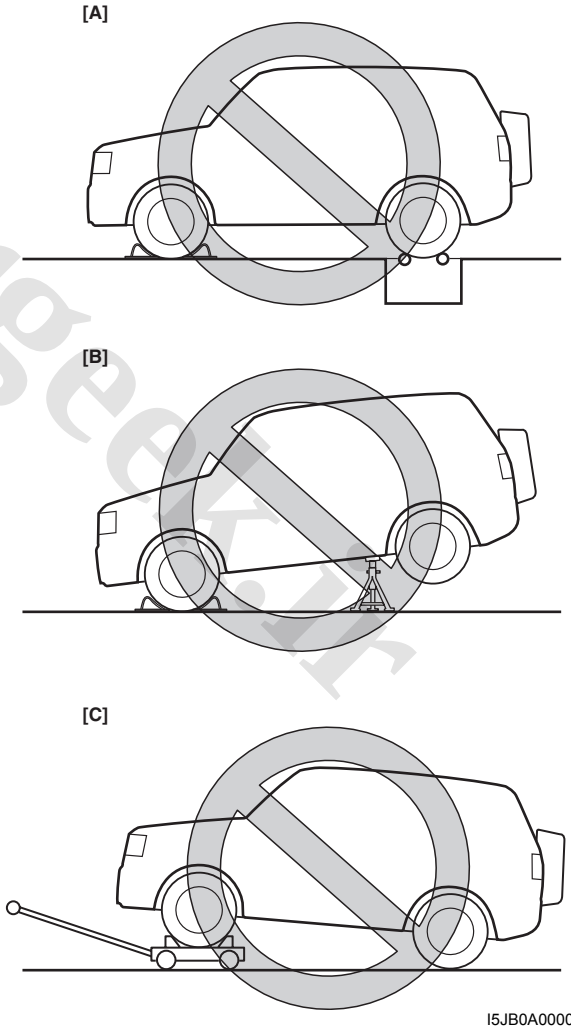


I5JB0A000004-01

www.cargeek.ir

www.CarGeek.ir


- **When testing with 2-wheel brake tester, be sure to observe the following instructions. Otherwise, drive train damage and personal injury may result.**
  - **Shift transmission to N (Neutral) position.**
  - **Shift transfer to N (Neutral) position if transfer position is selectable.**
  - **Run engine at specified idle speed.**
  - **Rotate wheels (tires) by brake tester at vehicle speed below 5 km/h (3 mile/h).**
  - **Do not rotate wheels (tires) for 1 min. or more.**
- **When testing with 2-wheel speedometer tester (which wheels are driven by tester), be sure to observe the following instructions. Otherwise, drivetrain damage and personal injury may result.**
  - **Set rear wheels on tester roller and front wheels on free roller.**
  - **Shift transmission to N (Neutral) position.**
  - **Shift transfer to N (Neutral) position if transfer position is selectable.**
  - **Rotate wheels (tires) by tester at vehicle speed below 60 km/h (37 mile/h).**
  - **Do not rotate wheels (tires) for 1 min. or more.**
  - **Ensure that vehicle does not move using wire ropes or chains.**
- **When testing with 2-wheel chassis dynamometer, speedometer tester or brake tester, be sure to make the vehicle as rear wheel drive by removing front propeller shaft or as front wheel drive by removing rear propeller shaft, referring to "Transfer Warning: Motor-Shift Type (Transfer with Shift Actuator) in Section 3C" or "Transfer Warning: Non-Shift Type (Transfer without Shift Actuator) in Section 3C".**
  **Note that speedometer of vehicle does not display vehicle speed because rear wheel speed sensor signal is not output if rear propeller shaft is removed.**
- **When testing with 4-wheel free chassis dynamometer or speedometer tester (which tester roller is driven by vehicle wheels), be sure to shift transfer to 4H-Lock position according to the step 4) in "Transfer Warning: Motor-Shift Type (Transfer with Shift Actuator) in Section 3C".**

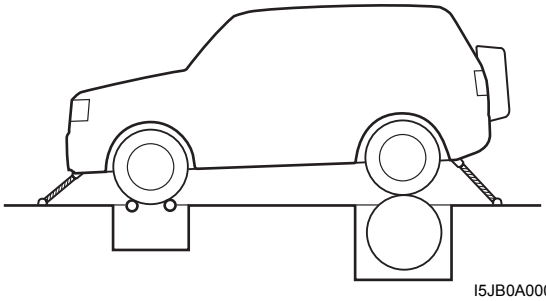

I5JB0A000006-01

- **When using On-vehicle type wheel balancing equipment (1), be sure to jack up all for wheels, off the ground completely and support vehicle with safety stands (2). Be careful of the other wheels, which will rotate at the same time.**

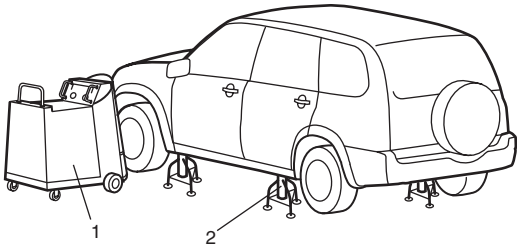


I5JB0A000005-02

**⚠ CAUTION**

- **This vehicle should be towed under one of the following condition:**
  - **With all wheels on a flatbed truck.**
  - **With front or rear wheels lifted and a dolly under the other wheels.**

## Precautions for Catalytic Converter

S5JB0A0000003

For vehicles equipped with a catalytic converter, use only unleaded gasoline and be careful not to let a large amount of unburned gasoline enter the converter or it can be damaged.

- Conduct a spark jump test only when necessary, make it as short as possible, and do not open the throttle.
- Conduct engine compression checks within the shortest possible time.
- Avoid situations which can result in engine misfire (e.g. starting the engine when the fuel tank is nearly empty.)

www.cargeek.ir

www.CarGeek.ir

## Precaution for CAN Communication System

S5JB0A0000005

- The loose (1) in the wire harnesses twist of the CAN lines except around the connector (3) should be within 100 mm (3.9 in.). Refer to the wiring diagram for the CAN lines discrimination. Excessively-loosed lines may be influenced by the electric noise.

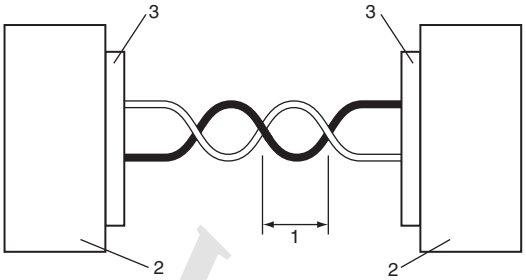


I4JA01000002-01

2. Controller

- Do not connect terminals of the CAN line using a bypass wire (1). Otherwise, the CAN line may be influenced by the electric noise.

I4JA01000003-01

## Precautions for Electrical Circuit Service

S5JB0A0000006

- When replacing a fuse, make sure to use a fuse of the specified capacity. Use of a fuse with a larger capacity will cause a damage to the electrical parts and a fire.

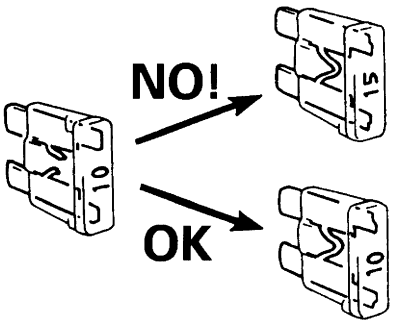


I2RH01010038-01

- When disconnecting and connecting coupler, make sure to turn ignition switch OFF, or electronic parts may get damaged.

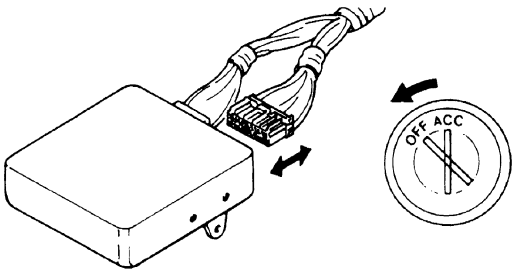


I2RH01010039-01

- When disconnecting connectors, never pull the wiring harness. Unlock the connector lock first and then pull them apart by holding connectors themselves.

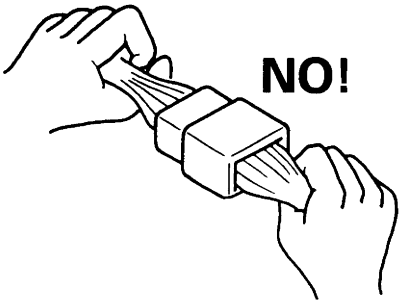


I2RH01010040-01

- When connecting connectors, also hold connectors and put them together until they lock securely (a click is heard).

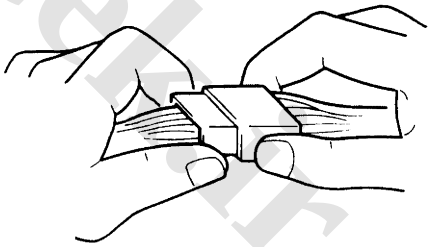

I2RH01010041-01

- When installing the wiring harness, fix it with clamps so that no slack is left.

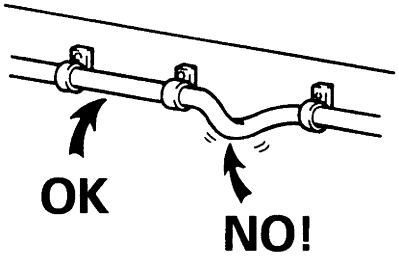


I2RH01010042-01

www.cargeek.ir

www.CarGeek.ir


- When installing vehicle parts, be careful so that the wiring harness is not interfered with or caught by any other part.

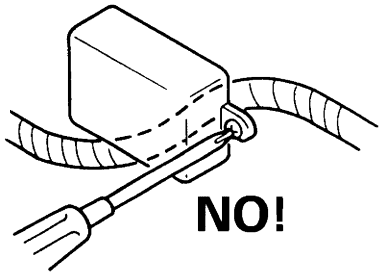


I2RH01010043-01

- To avoid damage to the harness, protect its part which may contact against a part forming a sharp angle by winding tape or the like around it.

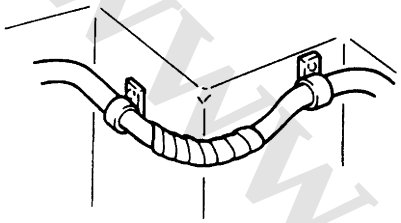

I2RH01010044-01

- Be careful not to touch the electrical terminals of parts which use microcomputers (e.g. electronic control unit like as ECM, PCM, P/S controller, etc.). The static electricity from your body can damage these parts.

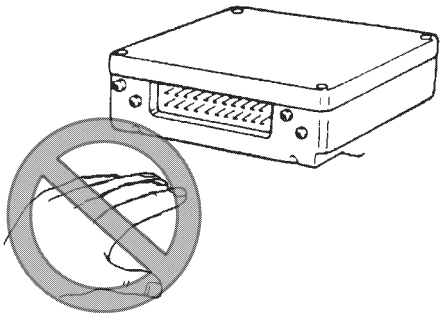

I3RM0A000004-01

- Never connect any tester (voltmeter, ohmmeter, or whatever) to electronic control unit when its coupler is disconnected. Attempt to do it may cause damage to it.
- Never connect an ohmmeter to electronic control unit with its coupler connected to it. Attempt to do it may cause damage to electronic control unit and sensors.
- Be sure to use a specified voltmeter / ohmmeter. Otherwise, accurate measurements may not be obtained or personal injury may result. If not specified, use a voltmeter with high impedance (M Ω/V minimum) or a digital type voltmeter.

- When taking measurements at electrical connectors using a tester probe, be sure to insert the probe (2) from the wire harness side (backside) of the connector (1).

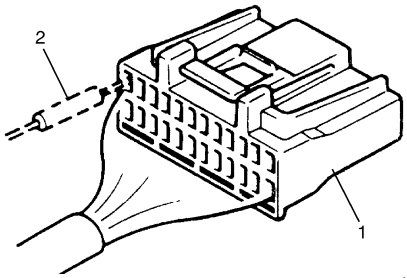


I2RH01010046-01

- When connecting meter probe (2) from terminal side of coupler (1) because it can't be connected from harness side, use extra care not to bend male terminal of coupler of force its female terminal open for connection.
  In case of such coupler as shown connect probe as shown to avoid opening female terminal.
  Never connect probe where male terminal is supposed to fit.

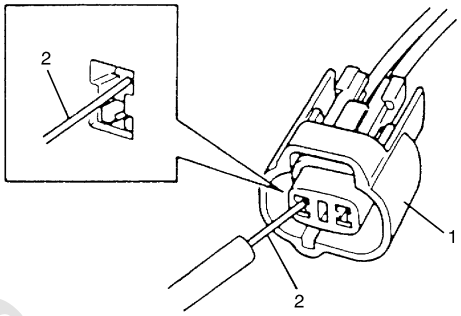


I2RH01010047-01

- When checking connection of terminals, check its male half for bend and female half for excessive opening and both for locking (looseness), corrosion, dust, etc.
- Before measuring voltage at each terminal, check to make sure that battery voltage is 11 V or higher. Such terminal voltage check at low battery voltage will lead to erroneous diagnosis.

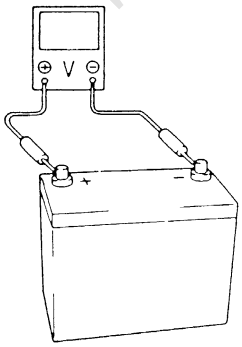


I2RH01010048-01

www.cargeek.ir

www.CarGeek.ir

## Precautions for Installing Mobile Communication Equipment

S5JB0A0000004

When installing mobile communication equipment such as CB (Citizens-Band)-radio or cellular-telephone, be sure to observe the following precautions.
Failure to follow cautions may adversely affect electronic control system.

- Keep the antenna as far away as possible from the vehicle's electronic control unit.
- Keep the antenna feeder more than 20 cm (7.9 in.) away from electronic control unit and its wire harnesses.
- Do not run the antenna feeder parallel with other wire harnesses.
- Confirm that the antenna and feeder are correctly adjusted.

## Air Bag Warning

S5JB0A0000007

**⚠ WARNING**

**For vehicles equipped with Supplemental Restraint (Air Bag) System:**

- **Service on and around the air bag system components or wiring must be performed only by an authorized SUZUKI dealer. Refer to "Air Bag System Components, Wiring and Connectors Location: in Section 8B" in order to confirm whether you are performing service on or near the air bag system components or wiring. Please observe all "WARNING"s and "Precautions on Service and Diagnosis of Air Bag System: in Section 8B" before performing service on or around the air bag system components or wiring. Failure to follow "WARNING"s could result in unintentional activation of the system or could render the system inoperative. Either of these two conditions may result in severe injury.**
- **Technical service work must be started at least 90 seconds after the ignition switch is turned to the "LOCK" position and the negative cable is disconnected from the battery. Otherwise, the system may be activated by reserve energy in the Sensing and Diagnostic Module (SDM).**

## Discharge Headlight Warning

S5JB0A0000014

**⚠ WARNING**

**When performing service on and around the discharge headlight, observe "Precautions for Discharge Headlight Service (If Equipped): in Section 9B". Neglecting the warnings may result in personal injury.**

## A/C System Caution

S5JB0A0000015

**⚠ CAUTION**

**The air conditioning system of this vehicle uses refrigerant HFC-134a (R-134a).**
**None of refrigerant, compressor oil and component parts is interchangeable between two types of A/C: one using refrigerant CFC-12 (R-12) and the other using refrigerant HFC-134a (R-134a).**
**Be sure to check which refrigerant is used before any service work including inspection and maintenance. For identification between these two types, refer to "A/C Refrigerant Type Description: in Section 7B".**
**When replenishing or changing refrigerant and compressor oil and when replacing parts, make sure that the material or the part to be used is appropriate to the A/C installed in the vehicle being serviced.**
**Use of incorrect one will result in leakage of refrigerant, damage in parts or other faulty condition.**

## Fastener Caution

S5JB0A0000009

**⚠ CAUTION**

**When fasteners are removed, always reinstall them at the same location from which they were removed. If a fastener needs to be replaced, use the correct part number fastener for that application. If the correct part number fastener is not available, a fastener of equal size and strength (or stronger) may be used. Fasteners that are not reused, and those requiring thread-locking compound, will be called out. The correct torque value must be used when installing fasteners that require it. If the above procedures are not followed, parts or system damage could result.**

www.cargeek.ir

www.CarGeek.ir


### Suspension Caution

S5JB0A0000010

**⚠ CAUTION**

- **All suspension fasteners are an important attaching part in that it could affect the performance of vital parts and systems, and/or could result in major repair expense. They must be replaced with one of the same part number or with an equivalent part if replacement becomes necessary. Do not use a replacement part of lesser quality or substitute design. Torque values must be used as specified during reassembly to assure proper retention of this part.**
- **Never attempt to heat, quench or straighten any suspension part. Replace it with a new part or damage to the part may result.**

### Wheels and Tires Caution

S5JB0A0000011

**⚠ CAUTION**

**All wheel fasteners are important attaching parts in that they could affect the performance of vital parts and systems, and/or could result in major repair expense. They must be replaced with one of the same part number or with an equivalent part if replacement becomes necessary. Do not use a replacement part of lesser quality or substitute design. Torque values must be used as specified during reassembly to assure proper retention of all parts. There is to be no welding as it may result in extensive damage and weakening of the metal.**

### Brakes Caution and Note

S5JB0A0000012

**⚠ CAUTION**

**All brake fasteners are important attaching parts in that they could affect the performance of vital parts and systems, and/or could result in major repair expense. They must be replaced with one of same part number or with an equivalent part if replacement becomes necessary. Do not use a replacement part of lesser quality or substitute design. Torque values must be used as specified during reassembly to assure proper retention of all parts. There is to be no welding as it may result in extensive damage and weakening of the metal.**

**NOTE**

**Before inspecting and servicing brakes for vehicle equipped with ABS, make sure that ABS is in good condition.**

### Differential Gear Oil Note

S5JB0A0000016

**NOTE**

- **When having driven through water, check immediately if water has entered (if so, oil is cloudy). Water mixed oil must be changed at once.**
- **Whenever vehicle is hoisted for any other service work than oil change, also be sure to check for oil leakage and status of breather hoses.**

## Repair Instructions

### Electrical Circuit Inspection Procedure

S5JB0A0006001

While there are various electrical circuit inspection methods, described here is a general method to check its open and short circuit by using an ohmmeter and a voltmeter.

#### Open Circuit Check

Possible causes for the open circuit are as follows. As the cause is in the connector or terminal in many cases, they need to be checked particularly carefully.

- Loose connection of connector
- Poor contact of terminal (due to dirt, corrosion or rust on it, poor contact tension, entry of foreign object etc.)
- Wire harness being open

www.cargeek.ir

www.CarGeek.ir

When checking system circuits including an electronic control unit such as ECM, TCM, ABS control module, etc., it is important to perform careful check, starting with items which are easier to check.

1) Disconnect negative cable from battery
2) Check each connector at both ends of the circuit being checked for loose connection. Also check lock condition of connector if equipped with connector lock.

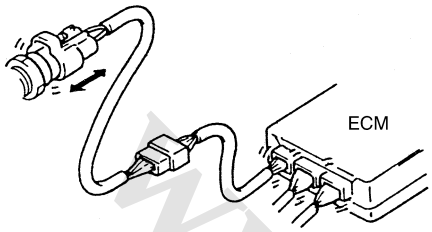


I2RH01010049-01

3) Using a test male terminal, check both terminals of the circuit being checked for contact tension of its female terminal. Check each terminal visually for poor contact (possibly caused by dirt, corrosion, rust entry of foreign object, etc.). At the same time, check to make sure that each terminal is locked in the connector fully.

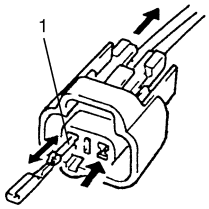


I2RH01010050-01

| | |
|---|---|
| 1. | Check contact tension by inserting and removing just for once. |

4) Using continuity check or voltage check the following procedure, check the wire harness for open circuit and poor connection with its terminals. Locate abnormality, if any.

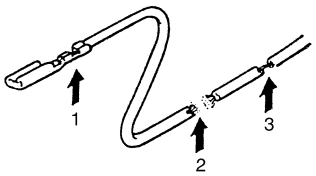


I2RH01010051-01

| | |
|---|---|
| 1. | Looseness of crimping |
| 2. | Open |
| 3. | Thin wire (single strand of wire) |

**Continuity Check**

1) Measure resistance between connector terminals at both ends of the circuit being checked (between “A-1” and “C-1” in the figure). If no continuity is indicated (infinity or over limit), that means that the circuit is open between terminals “A-1” and “C-1”.

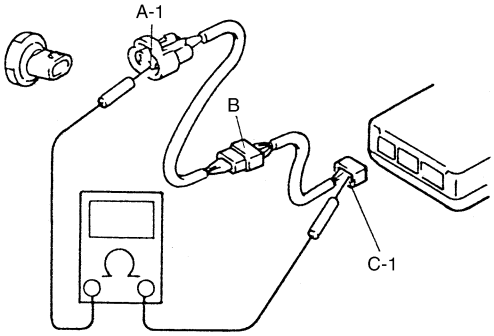


I2RH01010052-01

2) Disconnect the connector included in the circuit (connector-B in the figure) and measure resistance between terminals “A-1” and “B-1”.
If no continuity is indicated, that means that the circuit is open between terminals “A-1” and “B-1”. If continuity is indicated, there is an open circuit between terminals “B-1” and “C-1” or an abnormality in connector-B.

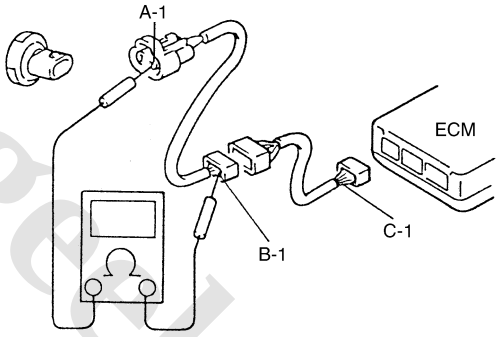


I2RH01010053-01

**Voltage Check**

If voltage is supplied to the circuit being checked, voltage check can be used as circuit check.

1) With all connectors connected and voltage applied to the circuit being checked, measure voltage between each terminal and body ground.
   a) If measurements were taken as shown in the figure and results were as listed in the following, it means that the circuit is open between terminals “B-1” and “A-1”.

   **<u>Voltage between each terminal and body ground</u>**
   **“C-1” and body ground: Approx. 5 V**
   **“B-1” and body ground: Approx. 5 V**
   **“A-1” and body ground: 0 V**

www.cargeek.ir

www.CarGeek.ir


b) Also, if measured values were as listed in the following, it means that there is a resistance (abnormality) of such level that corresponds to the voltage drop in the circuit between terminals “A-1” and “B-1”.

**Voltage between**
**“C-1” and body ground: Approx. 5 V**
**“B-1” and body ground: Approx. 5 V**
**“A-1” and body ground: Approx. 3 V**
**“A-1” and “B-1”: 2V voltage drop**

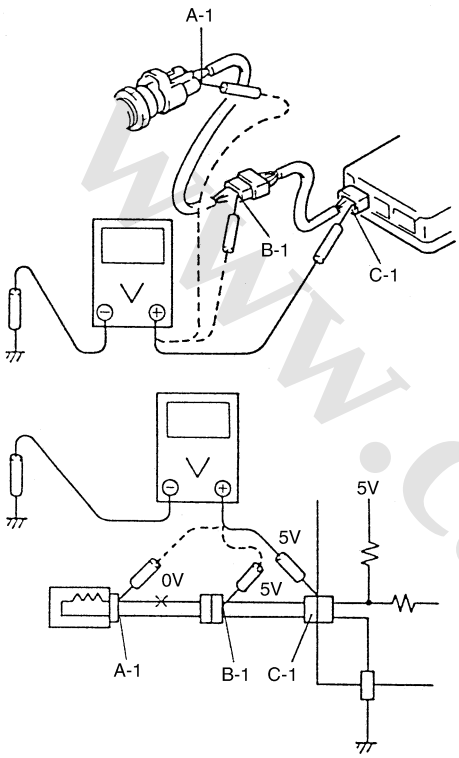

I5RH01000005-01

**Short Circuit Check (Wire Harness to Ground)**

1) Disconnect negative cable at battery.
2) Disconnect connectors at both ends of the circuit to be checked.

**NOTE**

**If the circuit to be checked is connected to other parts (1), disconnect all connectors of those parts.**
**Otherwise, diagnosis will be misled.**

3) Measure resistance between terminal at one end of circuit (“A-1” terminal in the figure) and body ground. If continuity is indicated, it means that there is a short to ground between terminals “A-1” and “C-1” of the circuit.

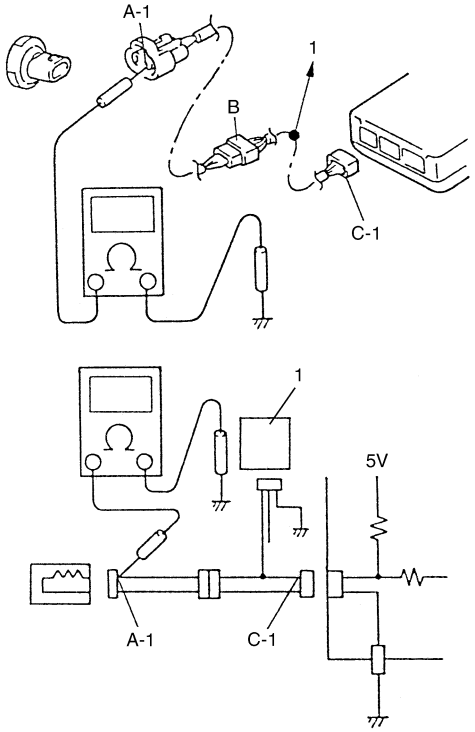

I5RH01000006-01

1. To other parts

4) Disconnect the connector included in circuit (connector B) and measure resistance between “A-1” and body ground.
If continuity is indicated, it means that the circuit is shorted to the ground between terminals “A-1” and “B-1”.

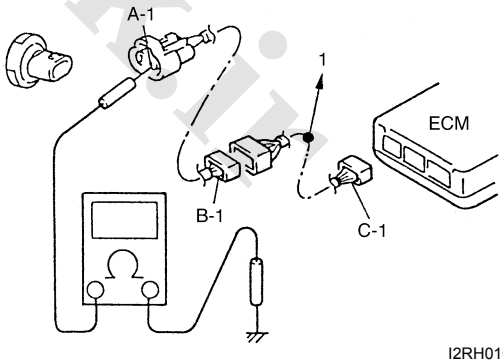

I2RH01010056-01

1. To other parts

www.cargeek.ir

www.CarGeek.ir

## Intermittent and Poor Connection Inspection

S5JB0A0006002

Most intermittent are caused by faulty electrical connections or wiring, although a sticking relay or solenoid can occasionally be at fault. When checking it for proper connection, perform careful check of suspect circuits for:

- Poor mating of connector halves, or terminals not fully seated in the connector body (backed out).
- Dirt or corrosion on the terminals. The terminals must be clean and free of any foreign material which could impede proper terminal contact. However, cleaning the terminal with a sand paper or the like is prohibited.
- Damaged connector body, exposing the terminals to moisture and dirt, as well as not maintaining proper terminal orientation with the component or mating connector.

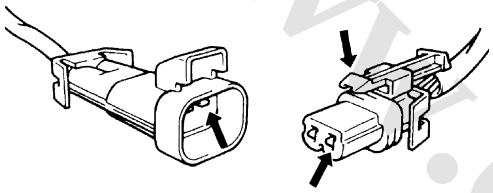

I2RH01010057-01

- Improperly formed or damaged terminals.
  Check each connector terminal in problem circuits carefully to ensure good contact tension by using the corresponding mating terminal.
  If contact tension is not enough, reform it to increase contact tension or replace.

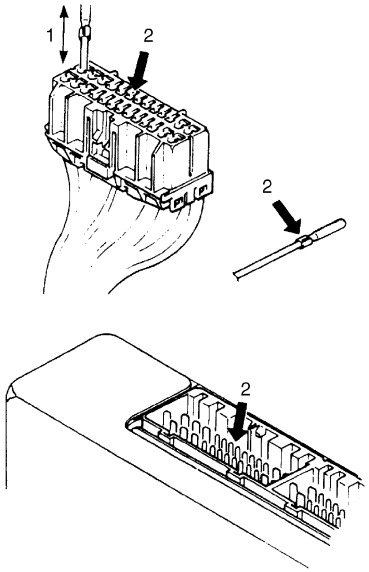


I5RH01000007-01

| | |
|---|---|
| 1. | Check contact tension by inserting and removing just once. |
| 2. | Check each terminal for bend and proper alignment. |

- Poor terminal-to-wire connection.
  Check each wire harness in problem circuits for poor connection by shaking it by hand lightly. If any abnormal condition is found, repair or replace.

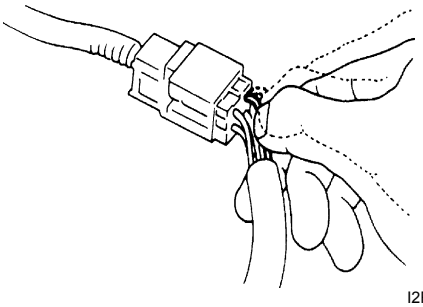

I2RH01010059-01

- Wire insulation which is rubbed through, causing an intermittent short as the bare area touches other wiring or parts of the vehicle.
- Wiring broken inside the insulation. This condition could cause continuity check to show a good circuit, but if only 1 or 2 strands of a multi-strand-type wire are intact, resistance could be far too high.
  If any abnormality is found, repair or replace.

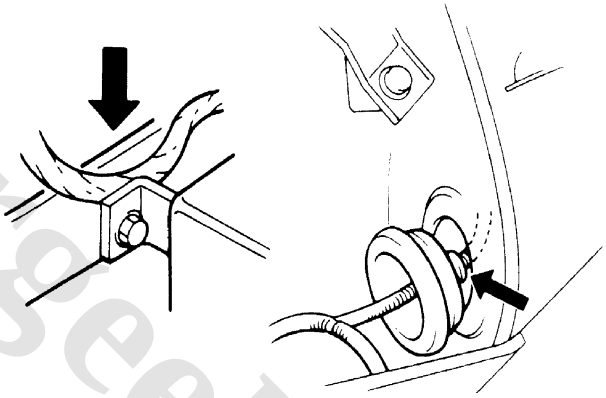

I2RH01010060-01

www.cargeek.ir

www.CarGeek.ir


# Section 0

# General Information

0

## CONTENTS


**General Information ..... 0A-1**
- **General Description ..... 0A-1**
  - Abbreviations ..... 0A-1
  - Symbols ..... 0A-2
  - Wire Color Symbols ..... 0A-3
  - Fastener Information ..... 0A-3
  - Vehicle Lifting Points ..... 0A-5
  - Engine Supporting Points ..... 0A-7
  - Vehicle Identification Number ..... 0A-7
  - Engine Identification Number ..... 0A-7
  - Transmission Identification Number ..... 0A-7
- **Component Location ..... 0A-8**
  - Warning, Caution and Information Label Location ..... 0A-8

**Maintenance and Lubrication ..... 0B-1**
- **Precautions ..... 0B-1**
  - Precautions for Maintenance and Lubrication ..... 0B-1
- **Scheduled Maintenance ..... 0B-1**
  - Maintenance Schedule under Normal Driving Conditions ..... 0B-1
  - Maintenance Recommended under Severe Driving Conditions ..... 0B-2
- **Repair Instructions ..... 0B-4**
  - Engine Accessory Drive Belt Inspection ..... 0B-4
  - Engine Accessory Drive Belt Replacement ..... 0B-4
  - Valve Lash (Clearance) Inspection ..... 0B-4
  - Engine Oil and Filter Change ..... 0B-5
  - Engine Coolant Change ..... 0B-6
  - Exhaust system Inspection ..... 0B-7
  - Spark Plugs Replacement ..... 0B-7
  - Air Cleaner Filter Inspection ..... 0B-7
  - Air Cleaner Filter Replacement ..... 0B-7
  - Fuel Lines and Connections Inspection ..... 0B-7
  - Fuel Filter Replacement ..... 0B-7
  - Fuel Tank Inspection ..... 0B-7
  - Crankcase Ventilation Hoses and Connections Inspection (Vehicle without A/F Sensor) ..... 0B-7
  - PCV Valve Inspection ..... 0B-7
  - Fuel Evaporative Emission Control System Inspection ..... 0B-8
  - Brake Discs and Pads Inspection ..... 0B-8
  - Brake Drums and Shoes Inspection ..... 0B-8
  - Brake Hoses and Pipes Inspection ..... 0B-8
  - Brake Fluid Change ..... 0B-8
  - Parking Brake Lever and Cable Inspection ..... 0B-9
  - Clutch Fluid Inspection ..... 0B-9
  - Tire / Wheel Inspection and Rotation ..... 0B-9
  - Wheel Discs Inspection ..... 0B-10
  - Wheel Bearing Inspection ..... 0B-10
  - Suspension System Inspection ..... 0B-10
  - Steering System Inspection ..... 0B-10
  - Propeller Shafts and Drive Shafts Inspection ..... 0B-11
  - Manual Transmission Oil Inspection ..... 0B-11
  - Manual Transmission Oil Change ..... 0B-11
  - Automatic Transmission Fluid Inspection ..... 0B-11
  - Automatic Transmission Fluid Change ..... 0B-12
  - Automatic Transmission Fluid Cooler Hose Inspection ..... 0B-12
  - Transfer Oil Inspection (If Equipped) ..... 0B-12
  - Differential Oil Inspection ..... 0B-12
  - Transfer (If Equipped) and Differential Oil Change ..... 0B-12
  - Power Steering (P/S) System Inspection ..... 0B-13
  - All Hinges, Latches and Locks Inspection ..... 0B-13
  - HVAC Air Filter Inspection (If Equipped) ..... 0B-13
  - HVAC Air Filter Replacement (If Equipped) ..... 0B-13
  - Final Inspection for Maintenance Service ..... 0B-13
- **Specifications ..... 0B-15**
  - Tightening Torque Specifications ..... 0B-15
- **Special Tools and Equipment ..... 0B-15**
  - Recommended Fluids and Lubricants ..... 0B-15
  - Special Tool ..... 0B-15


www.cargeek.ir

www.CarGeek.ir

# General Information

## General Description

### Abbreviations

S5JB0A0101001

**A:**
**ABDC:** After Bottom Dead Center
**ABS:** Anti-lock Brake System
**AC:** Alternating Current
**A/C:** Air Conditioning
**A-ELR:** Automatic-Emergency Locking Retractor
**A/F:** Air Fuel Mixture Ratio
**ALR:** Automatic Locking Retractor
**API:** American Petroleum Institute
**ATDC:** After Top Dead Center
**ATF:** Automatic Transmission Fluid
**A/T:** Automatic Transmission
**AWD:** All Wheel Drive
**B:**
**BBDC:** Before Bottom Dead Center
**BCM:** Body Electrical Control Module
**BTDC:** Before Top Dead Center
**B+:** Battery Positive Voltage
**C:**
**CAN:** Controller Area Network
**CKP Sensor:** Crankshaft Position Sensor
**CKT:** Circuit
**CMP Sensor:** Camshaft Position Sensor
**CO:** Carbon Monoxide
**CPP Switch:** Clutch Pedal Position Switch (Clutch Switch, Clutch Start Switch)
**CPU:** Central Processing Unit
**CRS:** Child Restraint System
**D:**
**DC:** Direct Current
**DLC:** Data Link Connector (Assembly Line Diag. Link, ALDL, Serial Data Link, SDL)
**DOHC:** Double Over Head Camshaft
**DOJ:** Double Offset Joint
**DRL:** Daytime Running Light
**DTC:** Diagnostic Trouble Code (Diagnostic Code)
**E:**
**EBCM:** Electronic Brake Control Module, ABS Control Module
**EBD:** Electronic Brake Force Distribution
**ECM:** Engine Control Module
**ECT Sensor:** Engine Coolant Temperature Sensor (Water Temp. Sensor, WTS)
**EFE Heater:** Early Fuel Evaporation Heater (Positive Temperature Coefficient, PTC Heater)
**EGR:** Exhaust Gas Recirculation
**EGRT Sensor:** EGR Temperature Sensor (Recirculated Exhaust Gas Temp. Sensor, REGTS)
**ELR:** Emergency Locking Retractor
**EPS:** Electronic Power Steering
**EVAP:** Evaporative Emission
**EVAP Canister:** Evaporative Emission Canister (Charcoal Canister)
**F:**
**FWD:** Front Wheel Drive
**4WD:** 4 Wheel Drive
**G:**
**GEN:** Generator
**GND:** Ground
**H:**
**HC:** Hydrocarbons
**HO2S:** Heated Oxygen Sensor
**HVAC:** Heating, Ventilating and Air Conditioning
**I:**
**IAC Valve:** Idle Air Control Valve (Idle Speed Control Solenoid Valve, ISC Solenoid Valve)
**IAT Sensor:** Intake Air Temperature Sensor (Air temperature Sensor, ATS)
**ICM:** Immobilizer Control Module
**IG:** Ignition
**IMT:** Intake Manifold Tuning
**ISC Actuator:** Idle Speed Control Actuator (Motor)
**L:**
**LH:** Left Hand
**LSPV:** Load Sensing Proportioning Valve
**M:**
**MAF Sensor:** Mass Air Flow Sensor (Air Flow Sensor, AFS, Air Flow Meter, AFM)
**MAP Sensor:** Manifold Absolute Pressure Sensor (Pressure Sensor, PS)
**Max:** Maximum
**MFI:** Multiport Fuel Injection (Multipoint Fuel Injection)
**MIL:** Malfunction Indicator Lamp (“SERVICE ENGINE SOON” Light)
**Min:** Minimum
**M/T:** Manual Transmission
**N:**
**NOx:** Nitrogen Oxides
**O:**
**OBD:** On-Board Diagnostic System (Self-Diagnosis Function)
**OCM:** Occupant Classification module
**O/D:** Overdrive
**OHC:** Over Head Camshaft
**O2S:** Oxygen Sensor
**P:**
**PCM:** Powertrain Control Module
**PCV:** Positive Crankcase Ventilation
**PNP:** Park / Neutral Position
**PSP Switch:** Power Steering Pressure Switch (P/S Pressure Switch)
**P/S:** Power Steering
**R:**
**RH:** Right Hand

www.cargeek.ir

www.CarGeek.ir


**S:**
**SAE:** Society of Automotive Engineers
**SDM:** Sensing and Diagnostic Module (Air Bag Controller, Air bag Control Module)
**SFI:** Sequential Multiport Fuel Injection
**SOHC:** Single Over Head Camshaft
**T:**
**TBI:** Throttle Body Fuel Injection (Single-Point Fuel Injection, SPI)
**TCC:** Torque Converter Clutch
**TCM:** Transmission Control Module (A/T Controller, A/T Control Module)
**TPMS:** Tire Pressure Monitoring System
**TP Sensor:** Throttle Position Sensor
**TVV:** Thermal Vacuum Valve (Thermal Vacuum Switching Valve, TVSV, Bimetal Vacuum Switching Valve, BVSV)
**TWC:** Three Way Catalytic Converter (Three Way Catalyst)
**2WD:** 2 Wheel Drive
**V:**
**VIN:** Vehicle Identification Number
**VSS:** Vehicle Speed Sensor
**VVT:** Variable Valve Timing (Camshaft Position Control)
**W:**
**WU-OC:** Warm Up Oxidation Catalytic Converter
**WU-TWC:** Warm Up Three Way Catalytic Converter

## Symbols

S5JB0A0101003

| Symbol | Definition |
|---|---|
| | Tightening torque |
| | Apply oil (engine, transmission, transfer, differential) |
| | Apply fluid (brake, power steering, automatic fluid) |
| | Apply SUZUKI SUPER GREASE A 99000-25010 |
| | Apply SUZUKI SUPER GREASE C 99000-25030 |
| | Apply SUZUKI SUPER GREASE E 99000-25050 |
| | Apply SUZUKI SUPER GREASE H 99000-25120 |
| | Apply SUZUKI SUPER GREASE I 99000-25030 |
| 1215 | Apply SUZUKI BOND NO. 1215 99000-31110 |
| 1207F | Apply SUZUKI BOND NO. 1207F 99000-31250 |
| 1217G | Apply SUZUKI BOND NO. 1217G 99000-31260 |
| 1216B | Apply SUZUKI BOND NO. 1216B 99000-31230 |
| Si | Apply SUZUKI SILICONE SEALANT 99000-31120 |
| 366E | Apply SUZUKI SEALING COMPOUND 366E 99000-31090 |
| 1305 | Apply THREAD LOCK 1305 99000-32100 |
| 1322 | Apply THREAD LOCK 1322 99000-32110 |
| 1342 | Apply THREAD LOCK 1342 99000-32050 |
| | Do not reuse. |
| | Note on reassembly. |

www.cargeek.ir

www.CarGeek.ir

## Wire Color Symbols

S5JB0A0101004

| Symbol | | Wire Color |
|---|---|---|
| B | BLK | Black |
| Bl | BLU | Blue |
| Br | BRN | Brown |
| G | GRN | Green |
| Gr | GRY | Gray |
| Lbl | LT BLU | Light blue |
| Lg | LT GRN | Light green |
| O, Or | ORN | Orange |
| R | RED | Red |
| W | WHT | White |
| Y | YEL | Yellow |
| P | PNK | Pink |
| V | PPL | Violet (Purple) |

There are two kinds of colored wire used in this vehicle. One is single-colored wire and the other is dual-colored (striped) wire. As the color symbol, the single-colored wire uses only one, three or five alphabets (i.e. “G” or “GRN”); the dual-colored wire uses two color symbols combination (i.e. “G/Y” or “GRN/YEL”). The first symbol represents the base color of the wire (“G” or “GRN” in the figure) and the second symbol represents the color of the stripe (“Y” or “YEL” in the figure).

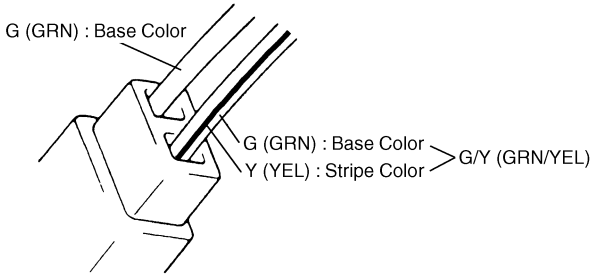


I1SQ01010037-01

## Fastener Information

S5JB0A0101005

### Metric Fasteners

Most of the fasteners used for this vehicle are metric. When replacing any fasteners, it is most important that replacement fasteners be the correct diameter, thread pitch and strength.

### Fastener Strength Identification

Most commonly used metric fastener strength property classes are 4T, 6.8, 7T, 8.8 and radial line with the class identification embossed on the head of each bolt. Some metric nuts will be marked with punch, 6 or 8 mark strength identification on the nut face. Figure shows the different strength markings.
When replacing metric fasteners, be careful to use bolts and nuts of the same strength or greater than the original fasteners (the same number marking or higher). It is likewise important to select replacement fasteners of the correct diameter and thread pitch. Correct replacement bolts and nuts are available through the parts division.
Metric bolts: Identification class numbers or marks correspond to bolt strength (increasing numbers represent increasing strength).

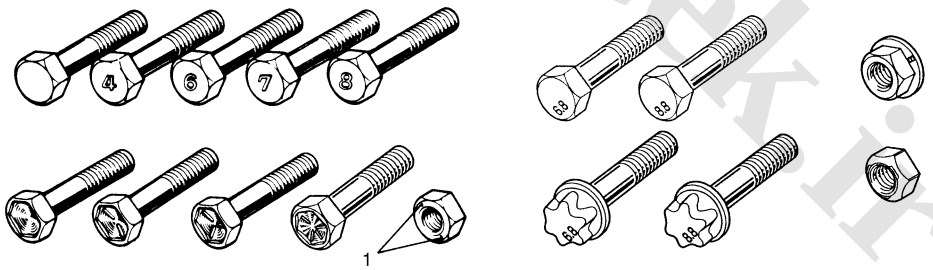


I1SQ01010003-01

1. Nut strength identification

www.cargeek.ir

www.CarGeek.ir


**Standard Tightening Torque**

Each fastener should be tightened to the torque specified in each section of this manual. If no description or specification is provided, refer to the following tightening torque chart for the applicable torque for each fastener. When a fastener of greater strength than the original one is used, however, use the torque specified for the original fastener.

**NOTE**

- **For the flanged bolt, flanged nut and self-lock nut of 4T and 7T strength, add 10% to the tightening torque given in the following chart.**
- **The following chart is applicable only where the fastened parts are made of steel light alloy.**

**Tightening torque chart**

| Strength | Unit | Thread Diameter (Nominal Diameter) (mm) | | | | | | | | |
|---|---|---|---|---|---|---|---|---|---|---|
| | | 4 | 5 | 6 | 8 | 10 | 12 | 14 | 16 | 18 |
| A equivalent of 4T strength fastener 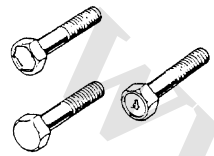 I1SQ01010004-01 | N·m | 1.5 | 3.0 | 5.5 | 13 | 29 | 45 | 65 | 105 | 160 |
| | kgf-m | 0.15 | 0.30 | 0.55 | 1.3 | 2.9 | 4.5 | 6.5 | 10.5 | 16.0 |
| | lb-ft | 1.0 | 2.5 | 4.0 | 9.5 | 21.0 | 32.5 | 47.0 | 76.0 | 116.0 |
| A equivalent of 6.8 strength fastener without flange 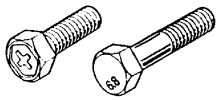 I1SQ01010005-01 | N·m | 2.4 | 4.7 | 8.4 | 20 | 42 | 80 | 125 | 193 | 280 |
| | kgf-m | 0.24 | 0.47 | 0.84 | 2.0 | 4.2 | 8.0 | 12.5 | 19.3 | 28.0 |
| | lb-ft | 2.0 | 3.5 | 6.0 | 14.5 | 30.5 | 58.0 | 90.5 | 139.5 | 202.5 |
| A equivalent of 6.8 strength fastener with flange<br>*: Self-lock nut (6 strength) 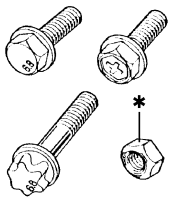 I1SQ01010006-01 | N·m | 2.4 | 4.9 | 8.8 | 21 | 44 | 84 | 133 | 203 | 298 |
| | kgf-m | 0.24 | 0.49 | 0.88 | 2.1 | 4.4 | 8.4 | 13.3 | 20.3 | 29.8 |
| | lb-ft | 2.0 | 3.5 | 6.5 | 15.5 | 32.0 | 61.0 | 96.5 | 147.0 | 215.5 |
| A equivalent of 7T strength fastener I1SQ01010007-01 | N·m | 2.3 | 4.5 | 10 | 23 | 50 | 85 | 135 | 210 | 240 |
| | kgf-m | 0.23 | 0.45 | 1.0 | 2.3 | 5.0 | 8.5 | 13.5 | 21 | 24 |
| | lb-ft | 2.0 | 3.5 | 7.5 | 17.0 | 36.5 | 61.5 | 98.0 | 152.0 | 174.0 |
| A equivalent of 8.8 strength bolt (8 strength nut) without flange 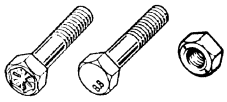 I1SQ01010008-01 | N·m | 3.1 | 6.3 | 11 | 27 | 56 | 105 | 168 | 258 | 373 |
| | kgf-m | 0.31 | 0.63 | 1.1 | 2.7 | 5.6 | 10.5 | 16.8 | 25.8 | 37.3 |
| | lb-ft | 2.5 | 4.5 | 8.0 | 19.5 | 40.5 | 76.0 | 121.5 | 187.0 | 270.0 |
| A equivalent of 8.8 strength bolt (8 strength nut) with flange 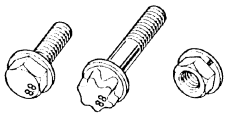 I1SQ01010009-01 | N·m | 3.2 | 6.5 | 12 | 29 | 59 | 113 | 175 | 270 | 395 |
| | kgf-m | 0.32 | 0.65 | 1.2 | 2.9 | 5.9 | 11.3 | 17.5 | 27 | 39.5 |
| | lb-ft | 2.5 | 5.0 | 9.0 | 21.0 | 43.0 | 82.0 | 126.5 | 195.5 | 286.0 |

www.cargeek.ir

www.CarGeek.ir

## Vehicle Lifting Points

S5JB0A0101006

**⚠ WARNING**

- **Before applying hoist to underbody, always take vehicle balance throughout service into consideration. Vehicle balance on hoist may change depending of what part to be removed.**
- **Before lifting up the vehicle, check to be sure that end of hoist arm is not in contact with brake pipe, fuel pipe, bracket or any other part.**
- **When using frame contact hoist, apply hoist as shown (right and left at the same position). Lift up the vehicle till 4 tires are a little off the ground and make sure that the vehicle will not fall off by trying to move vehicle body in both ways. Work can be started only after this confirmation.**
- **Make absolutely sure to lock hoist after vehicle is hoisted up.**

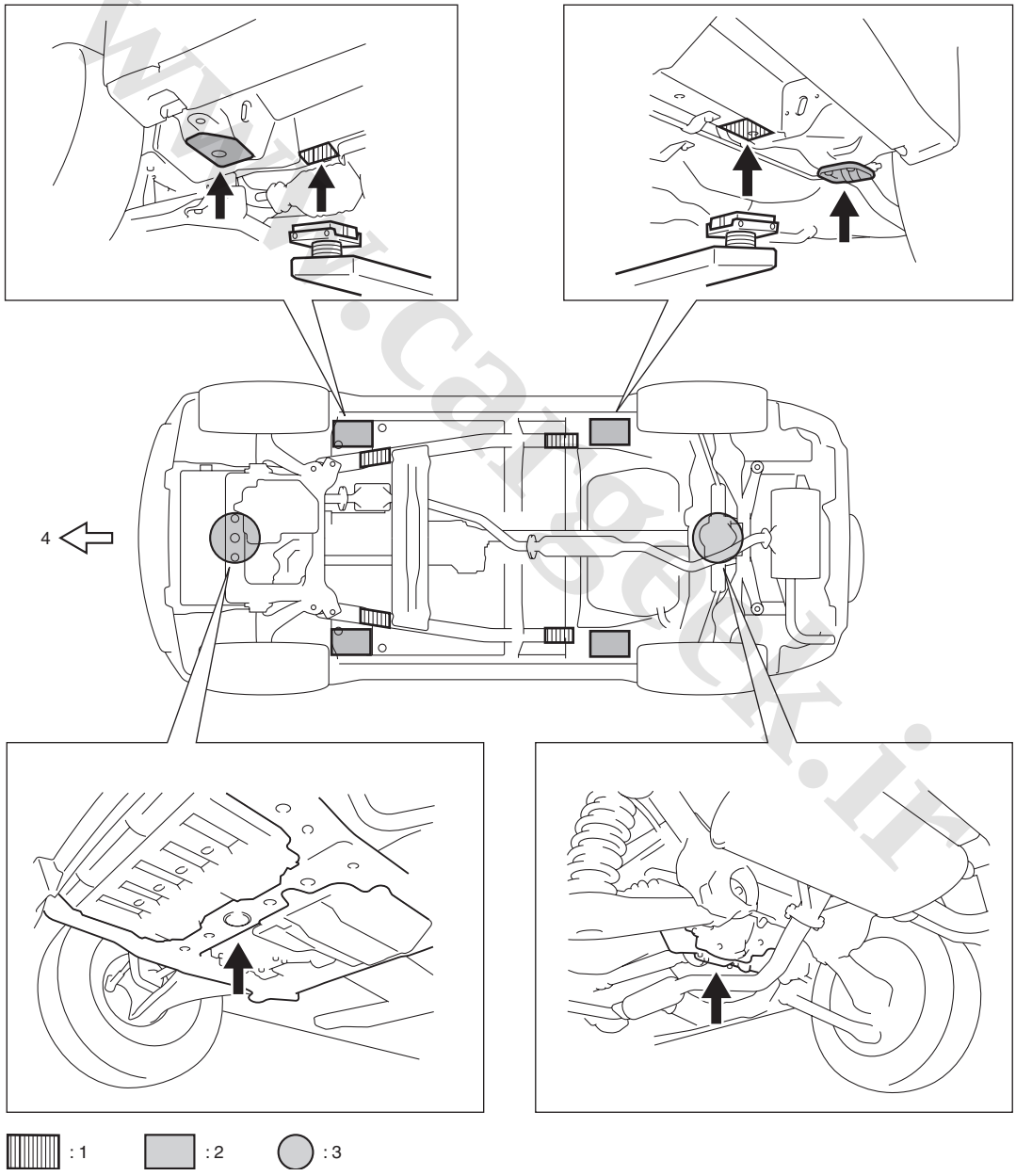


I5JB0A010002-02

| | |
|---|---|
| 1. Support position for frame contact hoist (when engine assembly is not removed) and safety stand | 3. Floor jack position |
| 2. Support position for frame contact hoist (when engine assembly is removed) | 4. Vehicle front |

www.cargeek.ir

www.CarGeek.ir


### When using floor jack

**⚠ WARNING**

- **If the vehicle to be jacked up only at the front or rear end, be sure to block the wheels on ground in order to ensure safety.**
  **After the vehicle is jacked up, be sure to support it on stands. It is extremely dangerous to do any work on the vehicle raised on jack alone.**

**⚠ CAUTION**

- **Never apply jack against engine under cover, suspension parts (i.e., stabilizer, etc.) or vehicle floor, or it may get damaged.**

In raising front or rear vehicle end off the floor by jacking, be sure to put the jack against the center portion of the front suspension frame (1) or rear differential (2).

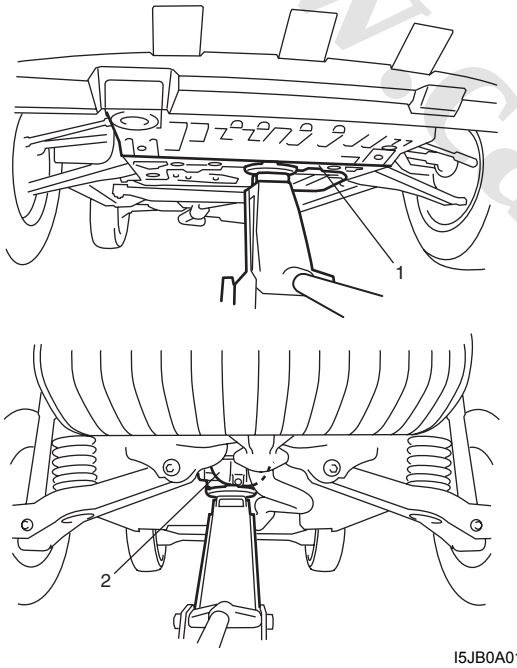


I5JB0A010003-01

To perform service with either front or rear vehicle end jacked up, be sure to place safety stands (1) under chassis frame so that body is securely supported.
And then check to ensure that chassis frame does not slide on safety stands (1) and the vehicle is held stable for safety's sake.

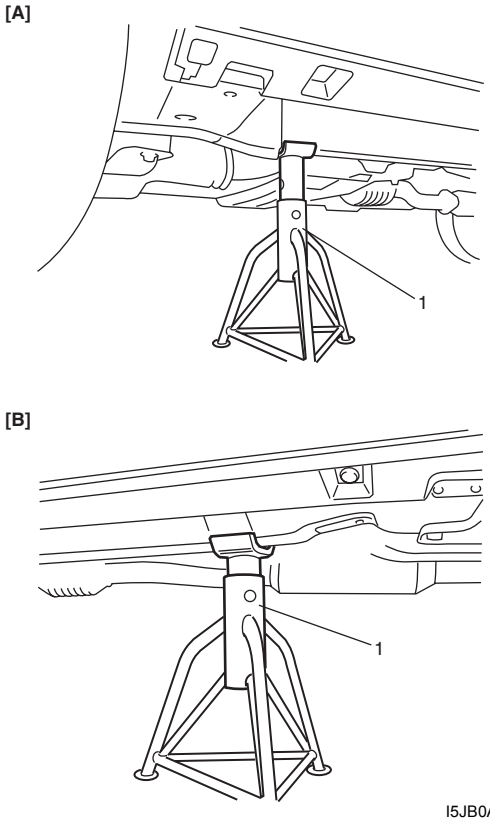


I5JB0A010004-02

| | |
|---|---|
| [A]: Front | [B]: Rear |

www.cargeek.ir

www.CarGeek.ir

## Engine Supporting Points

S5JB0A0101010

**⚠ WARNING**

**When using engine supporting device (1), be sure to observe the followings.**
**Otherwise, not only deformation of vehicle body and/or engine hook but also personal injury may result.**

- **Apply supporting device at the specified positions (2) indicated in figure**
- **Install supporting device taking a well-balanced posture.**
- **Do not contact supporting device with other parts than specified positions and engine hooks.**
- **Do not remove engine rear mounting (transfer mounting) while supporting.**
- **Set support device so that side force applies to hook excessively.**
  **Excessive side force will deform hook.**

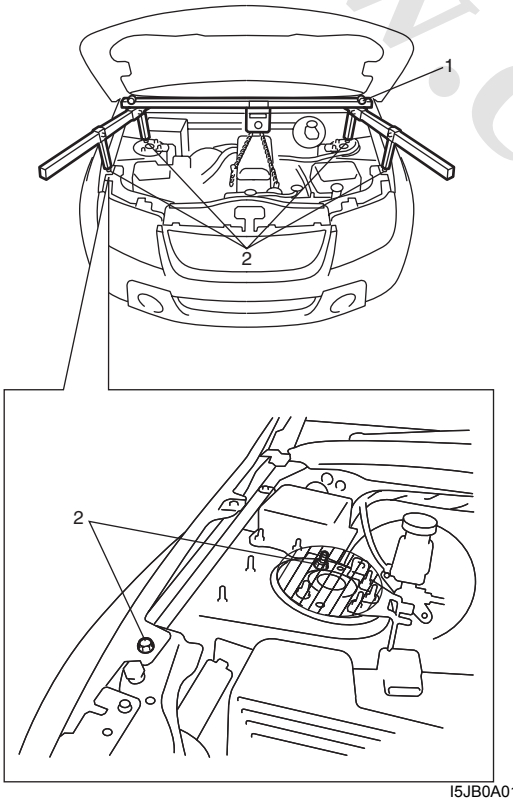


I5JB0A010005-02

## Vehicle Identification Number

S5JB0A0101007

The vehicle identification number is punched on the front dash panel in engine room and it is also attached on the left front top of instrument panel depending on vehicle specification.

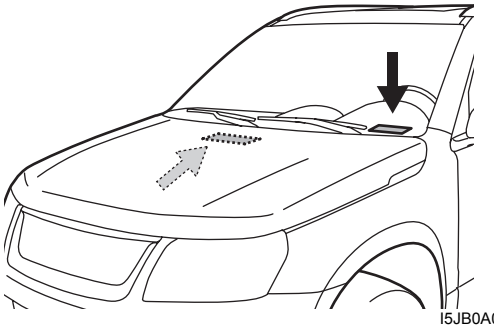

I5JB0A010001-02

## Engine Identification Number

S5JB0A0101008

The number is punched on the cylinder block.

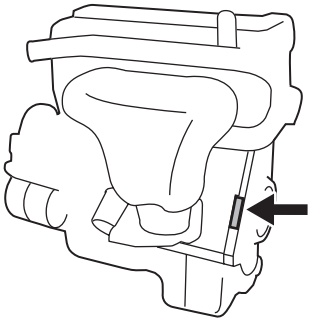

I5JB0A010006-01

## Transmission Identification Number

S5JB0A0101009

The number is located on the transmission case.

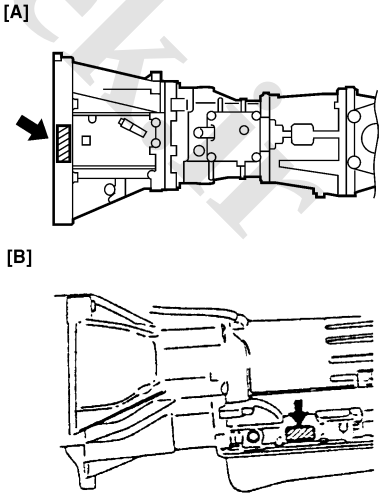


I5JB0A010007-03

| | |
|---|---|
| [A]: M/T | [B]: 4A/T |

www.cargeek.ir

www.CarGeek.ir


# Component Location

## Warning, Caution and Information Label Location

S5JB0A0103001

The figure shows main labels among others that are attached to vehicle component parts.
When servicing and handling parts, refer to WARNING / CAUTION instructions printed on labels.
If any WARNING / CAUTION label is found stained or damaged, clean or replace it as necessary.

**NOTE**

**Air bag labels are attached on the vehicle equipped with air bag system only.**

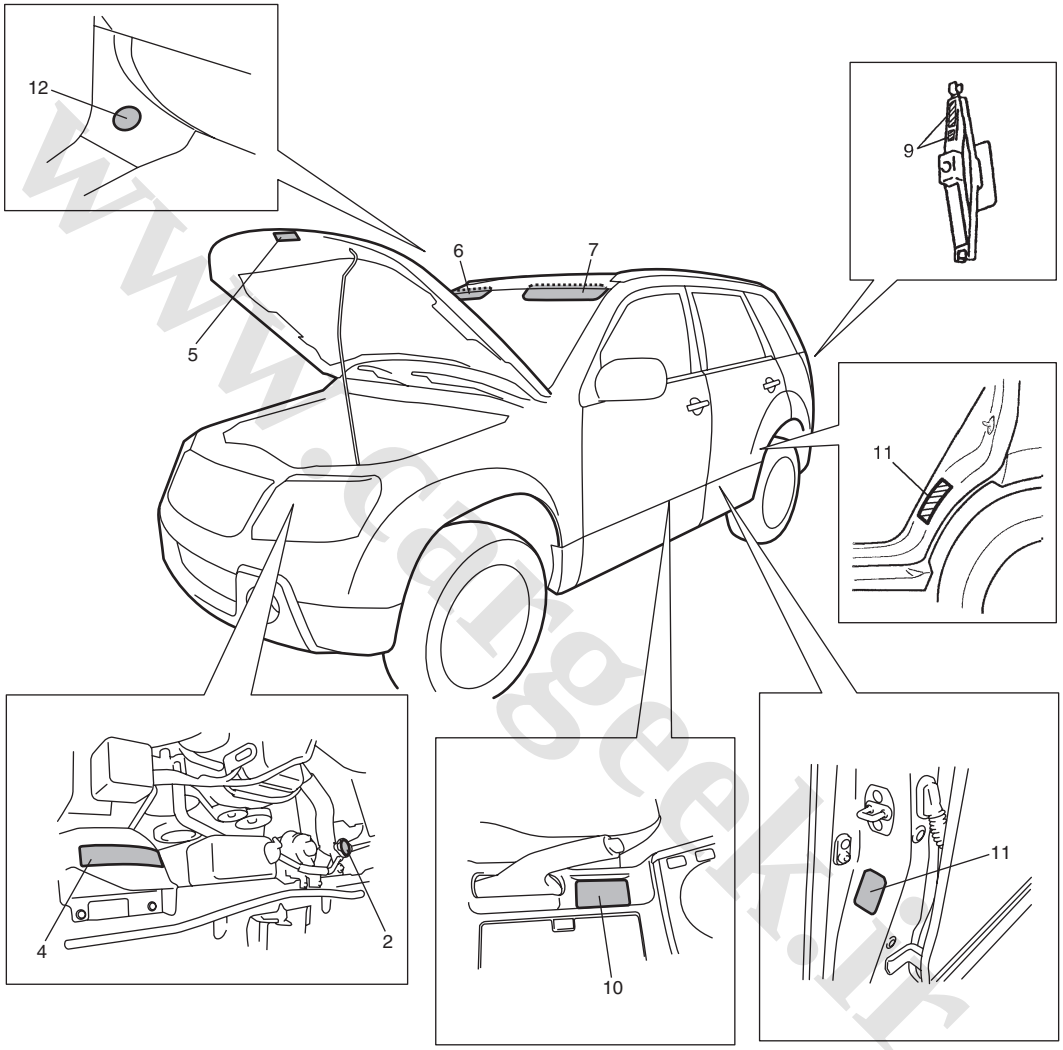


I5JB0A010008-04

| | | |
|---|---|---|
| 1. Blank | 5. A/C label | 9. Jacking label |
| 2. Radiator cap label | 6. Air bag label on sun visor | 10. Parking label (if equipped) |
| 3. Blank | 7. Air bag label and utility vehicle label on sun visor | 11. Side air bag label (Both RH and LH) |
| 4. Engine cooling fan label | 8. Blank | 12. Child seat label on instrument panel |

www.cargeek.ir

www.CarGeek.ir

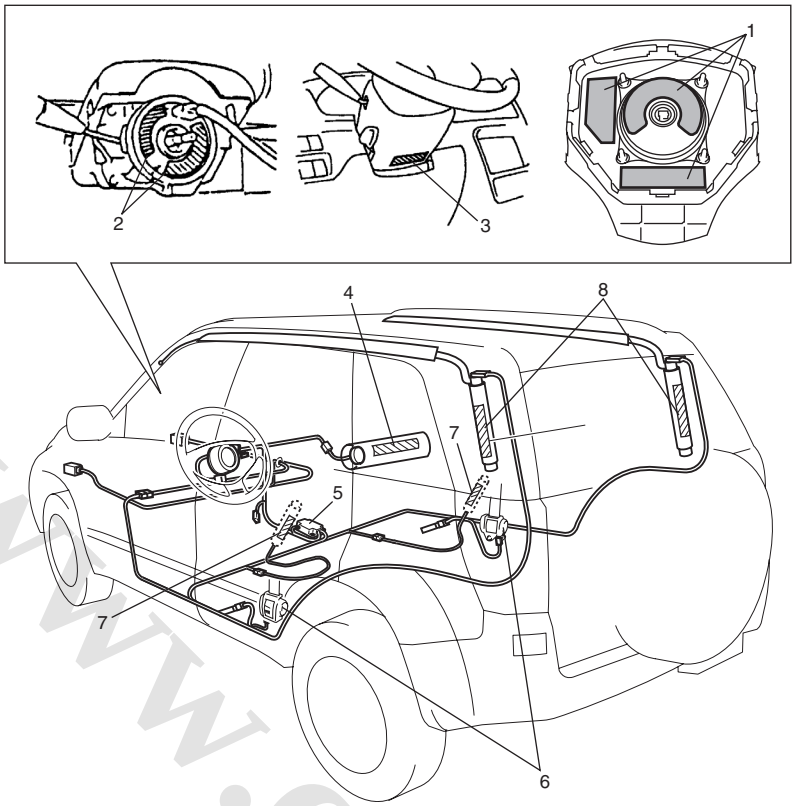


I5JB0A010009-03

| | | |
|---|---|---|
| 1. Air bag label on driver air bag (inflator) module | 4. Air bag label on passenger air bag (inflator) module | 7. Air bag label on side air bag module |
| 2. Air bag label on contact coil assembly | 5. Air bag label on SDM | 8. Air bag label on curtain air bag module |
| 3. Air bag label on steering column cover | 6. Pretensioner label on seat belt pretensioner | |

www.cargeek.ir

www.CarGeek.ir


# Maintenance and Lubrication

## Precautions

### Precautions for Maintenance and Lubrication

S5JB0A0200001

**Air Bag Warning**
Refer to “Air Bag Warning: in Section 00”.

## Scheduled Maintenance

### Maintenance Schedule under Normal Driving Conditions

S5JB0A0205001

**NOTE**

- **This interval should be judged by odometer reading or months, whichever comes first.**
- **This table includes service as scheduled up to 90,000 km (54,000 miles) mileage. Beyond 90,000 km (54,000 miles), carry out the same services at the same intervals respectively.**

| Interval | | | | Km (x 1,000) | 15 | 30 | 45 | 60 | 75 | 90 |
|---|---|---|---|---|---|---|---|---|---|---|
| | | | | Miles (x 1,000) | 9 | 18 | 27 | 36 | 45 | 54 |
| | | | | Months | 12 | 24 | 36 | 48 | 60 | 72 |
| **Engine** | | | | | | | | | | |
| Accessory drive belt (I: ☞, R: ☞) | | | | | — | — | I | — | — | R |
| Valve lash (clearance) (I: ☞) | | | | | — | I | — | I | — | I |
| Engine oil and oil filter (R: ☞) | | | | | R | R | R | R | R | R |
| Engine coolant (R: ☞) | | | | | — | — | R | — | — | R |
| Exhaust system (I: ☞) | | | | | — | I | — | I | — | I |
| **Ignition system** | | | | | | | | | | |
| *Spark plugs (R: ☞) | When unleaded fuel is used | Vehicle with A/F sensor | Nickel Plug | | — | — | R | — | — | R |
| | | | Iridium Plug (Highly recommended) | | Replace every 105,000 km (63,000 miles) or 84 months | | | | | |
| | | Vehicle without A/F sensor | Nickel Plug | | — | R | — | R | — | R |
| | | | Iridium Plug | | — | — | — | R | — | — |
| | When leaded fuel is used, refer to “Maintenance Recommended under Severe Driving Conditions: ”. | | | | | | | | | |
| **Fuel system** | | | | | | | | | | |
| Air cleaner filter (I: ☞, R: ☞) | | Paved-road | | | I | I | R | I | I | R |
| | | Dusty conditions | | | Refer to “Maintenance Recommended under Severe Driving Conditions: ”. | | | | | |
| Fuel lines and connections (I: ☞) | | | | | — | I | — | I | — | I |
| Fuel filter (R: ☞) | | | | | Replace every 105,000 km (63,000 miles) | | | | | |
| Fuel tank (I: ☞) | | | | | — | — | I | — | — | I |
| **Emission control system** | | | | | | | | | | |
| Crankcase ventilation hoses and connections (vehicle without A/F sensor) (I: ☞) | | | | | — | — | I | — | — | I |
| *PCV valve (I: ☞) | | Vehicle with A/F sensor | | | — | — | — | — | — | I |
| | | Vehicle without A/F sensor | | | — | — | I | — | — | I |
| *Fuel evaporative emission control system (I: ☞) | | Vehicle with A/F sensor | | | — | — | — | — | — | I |
| | | Vehicle without A/F sensor | | | — | I | — | I | — | I |
| **Brake** | | | | | | | | | | |
| Brake discs and pads (thickness, wear, damage) (I: ☞) | | | | | I | I | I | I | I | I |
| Brake drums and shoes (wear, damage) (I: ☞) | | | | | — | I | — | I | — | I |
| Brake hoses and pipes (leakage, damage, clamp) (I: ☞) | | | | | — | I | — | I | — | I |
| Brake fluid (R: ☞) | | | | | — | R | — | R | — | R |
| Brake lever and cable (damage, stroke, operation) (I: ☞) | | | | | Inspect at first 15,000 km (9,000 miles only) | | | | | |
| **Chassis and body** | | | | | | | | | | |

www.cargeek.ir

 www.CarGeek.ir

| Interval | Km (x 1,000) | 15 | 30 | 45 | 60 | 75 | 90 |
|---|---|---|---|---|---|---|---|
| | Miles (x 1,000) | 9 | 18 | 27 | 36 | 45 | 54 |
| | Months | 12 | 24 | 36 | 48 | 60 | 72 |
| Clutch (fluid leakage, level) (I: ☞) | | — | I | — | I | — | I |
| Tires (wear, damage, rotation) / wheels (damage) (I: ☞ /☞) | | I | I | I | I | I | I |
| Suspension system (tightness, damage, rattle, breakage) (I: ☞) | | — | I | — | I | — | I |
| Steering system (tightness, damage, breakage, rattle) (I: ☞) | | — | I | — | I | — | I |
| Drive shaft (axle) boots / Propeller shafts (I: ☞) | | — | — | I | — | — | I |
| Manual transmission oil (leakage, level) (I: ☞ 1st 15,000 km only) (R: ☞) | | I | — | R | — | — | R |
| Automatic transmission fluid | Fluid level (I: ☞) | — | I | — | I | — | I |
| | Fluid change (R: ☞) | Replace every 165,000 km (99,000 miles) | | | | | |
| | Fluid hose (I: ☞) | — | — | — | I | — | — |
| Transfer oil (leakage, level) (I: ☞) | | I | — | I | — | I | — |
| Differential oil (leakage, level) (R: ☞ 1st 15,000 km only) (I: ☞) | | R or I | — | I | — | I | — |
| Power steering (if equipped) (I: ☞) | | I | I | I | I | I | I |
| All latches, hinges and locks (I: ☞) | | — | I | — | I | — | I |
| HVAC air filter (if equipped) (I: ☞) (R: ☞) | | — | I | R | — | I | R |

**NOTE**

- **"R": Replace or change**
- **"I": Inspect and correct, replace or lubricate if necessary**
- **For Sweden, items with asterisk (*) should be performed by odometer reading only.**
- **For spark plugs, replace every 50,000 km if the local law requires.**
- **Nickel spark plug: BKR6E-11 (NGK) or K20PR-U11 (DENSO)**
- **Iridium spark plug: IFR6J11 (NGK) for M16 engine, IFR5J11 (NGK) for J20 engine**

## Maintenance Recommended under Severe Driving Conditions

S5JB0A0205003

If the vehicle is usually used under the conditions corresponding to any severe condition code, IT IS RECOMMENDED that applicable maintenance operation be performed at the particular interval as shown in the following table.

**Severe condition code:**

**A:** Repeated short trips
**B:** Driving on rough and/or muddy roads
**C:** Driving on dusty roads
**D:** Driving in extremely cold weather and/or salted roads
**E:** Repeated short trips in extremely cold weather
**F:** Leaded fuel use
**G:** – – – – – – – – –
**H:** Towing a trailer (if admitted)

| Severe Condition Code | Maintenance | Maintenance Operation | Maintenance Interval |
|---|---|---|---|
| – B C D – – – – | Engine accessory drive belt | ☞ I | Every 15,000 km (9,000 miles) or 12 months |
| | | ☞ R | Every 45,000 km (27,000 miles) or 36 months |
| A – C D E F – H | Engine oil and oil filter | ☞ R | Every 7,500 km (4,500 miles) or 6 months |
| – B – – – – – – | Exhaust pipe mountings | ☞ I | Every 15,000 km (9,000 miles) or 12 months |
| – B – – – – – – | Suspension bolts and nuts | ☞ T | Every 15,000 km (9,000 miles) or 12 months |
| – – C – – – – – | Air cleaner filter *1 | ☞ I | Every 2,500 km (1,500 miles) |
| | | ☞ R | Every 30,000 km (18,000 miles) or 24 months |

www.cargeek.ir

www.CarGeek.ir


| Severe Condition Code | Maintenance | | Maintenance Operation | Maintenance Interval |
|---|---|---|---|---|
| A B C – E F – H | Spark plugs | Nickel plug | ☞ R | Every 10,000 km (6,000 miles) or 8 months |
| | | Iridium plug (Highly recommended) | | Every 30,000 km (18,000 miles) or 24 months |
| – B C D – – – H | Wheel bearings | | ☞ I | Every 15,000 km (9,000 miles) or 12 months |
| – B – D E – – H | Drive shaft boots and propeller shafts | | ☞ I | Every 15,000 km (9,000 miles) or 12 months |
| – B – – E – – H | Manual transmission oil / Transfer oil / Differential oil | | ☞/☞ R | First time only: 15,000 km (9,000 miles) or 12 months |
| | | | | Second time and after: Every 30,000 km (18,000 miles) or 24 months reckoning from 0 km (0 mile) or 0 month |
| – B – – E – – H | Automatic transmission fluid | | ☞ R | Every 30,000 km (18,000 miles) or 24 months |
| – – C D – – – – | HVAC air filter (if equipped) *2 | | ☞ I | Every 15,000 km (9,000 miles) or 12 months |
| | | | ☞ R | Every 45,000 km (27,000 miles) or 36 months |

**NOTE**

- **"I": Inspect and correct or replace if necessary.**
- **"R": Replace or change.**
- **"T": Tighten to specified torque.**
- ***1: Inspect more frequently if the vehicle is used under dusty conditions.**
- ***2: Clean more frequently if the air flow from air conditioning decreases.**

www.cargeek.ir
www.cargeek.ir

 www.CarGeek.ir

# Repair Instructions

## Engine Accessory Drive Belt Inspection

S5JB0A0206001

**⚠ WARNING**

**All inspection and replacement are to be performed with ENGINE NOT RUNNING.**

**Water Pump and Generator Drive Belt**

Inspect belt for cracks, cuts, deformation, wear cleanliness and tension. If any defect exists, adjust or replace.

For belt inspection, refer to “Water Pump and Generator Drive Belt Tension Inspection and Adjustment (For M16 Engine): in Section 1J” or “Water Pump and Generator Drive Belt On-Vehicle Inspection (For J20 Engine): in Section 1J”.

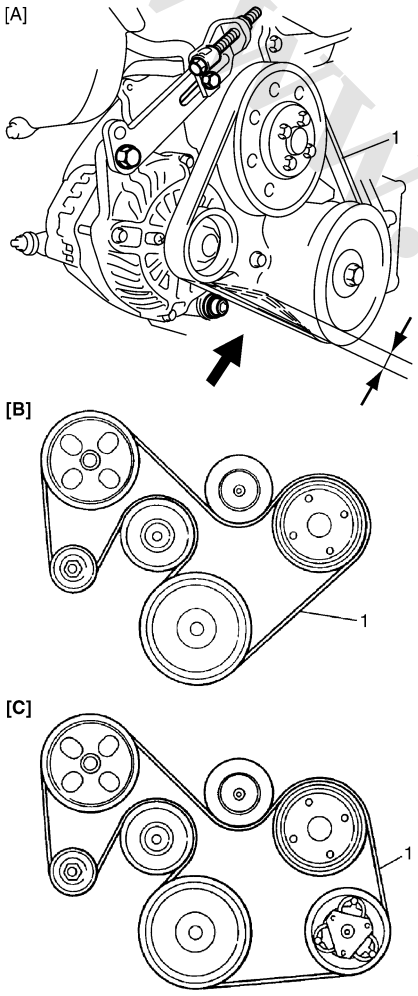


I5JB0A020018-01

| | |
|---|---|
| [A]: M16 engine | [C]: J20 engine with A/C |
| [B]: J20 engine without A/C | |

**Power Steering Pump and A/C Compressor (If Equipped) Drive Belt (M16 Engine)**

Inspect belt for cracks, cuts, deformation, wear cleanliness and tension. If any defect exists, adjust or replace.

For inspection, refer to “P/S Pump and A/C Compressor (If Equipped) Drive Belt Inspection and Adjustment for M16 Engine Model: in Section 6C”.

## Engine Accessory Drive Belt Replacement

S5JB0A0206002

**Water Pump and Generator Drive Belt**

Replace belt referring to “Water Pump and Generator Drive Belt Removal and Installation (For M16 Engine): in Section 1J” or “Water Pump and Generator Drive Belt Removal and Installation (For J20 Engine): in Section 1J”.

**Power Steering Pump and A/C Compressor (If Equipped) Drive Belt (M16 Engine)**

Replace belt and then adjust belt tension referring to “P/S Pump and A/C Compressor (If Equipped) Drive Belt Removal and Installation for M16 Engine Model: in Section 6C”.

## Valve Lash (Clearance) Inspection

S5JB0A0206043

Inspect intake and exhaust valve lash and adjust as necessary.

Refer to “Valve Lash (Clearance) Inspection: For M16A Engine with VVT in Section 1D” or “Valve Lash (Clearance) Inspection: For J20 Engine in Section 1D” for valve lash inspection and adjustment procedure.

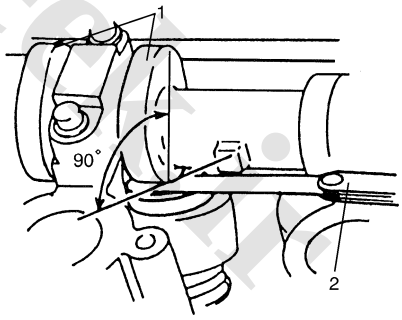


I2RH0B020003-02

| | |
|---|---|
| 1. Camshaft | 2. Thickness gauge |

www.cargeek.ir

www.CarGeek.ir


## Engine Oil and Filter Change

S5JB0A0206003

**⚠ WARNING**

- **New and used engine oil can be hazardous.**
  **Be sure to read "General Precautions: in Section 00" and observe what in written there.**
- **Steps 1) – 7) must be performed with ENGINE NOT RUNNING. For Step 8), be sure to have adequate ventilation while engine is running.**

Before draining engine oil, check engine for oil leakage. If any evidence of leakage is found, make sure to correct defective part before proceeding to the following work.

1) Drain engine oil by removing drain plug.
2) After draining oil, wipe drain plug clean. Reinstall drain plug.

   **Tightening torque**
   **Engine oil drain plug (a): 35 N·m (3.5 kgf-m, 25.5 lb-ft)**

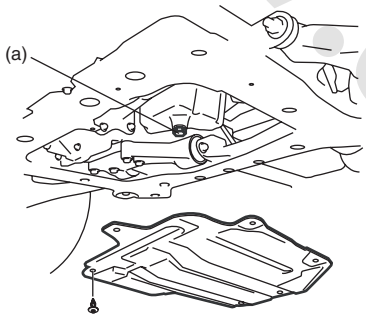


I5JB0A020003-01

3) Loosen oil filter by using oil filter wrench (special tool).

   **Special tool**
   **(A): 09915–40611**

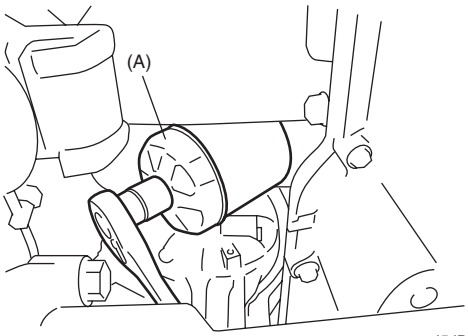


I5JB0A020020-01

4) Apply engine oil to new oil filter O-ring.

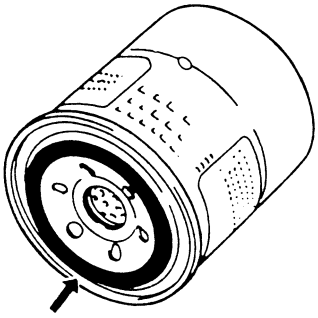

IYSQ01020009-01

5) Screw new filter on oil filter stand by hand until the filter O-ring contacts the mounting surface.

   **⚠ CAUTION**

   **To tighten oil filter properly, it is important to accurately identify the position at which filter O-ring first contacts the mounting surface.**

6) Tighten oil filter (1) 3 / 4 turn from the point of contact with the mounting surface using an oil filter wrench (2).

   **Tightening torque**
   **Oil filter (a): 14 N·m (1.4 kgf-m, 10.5 lb-ft)**

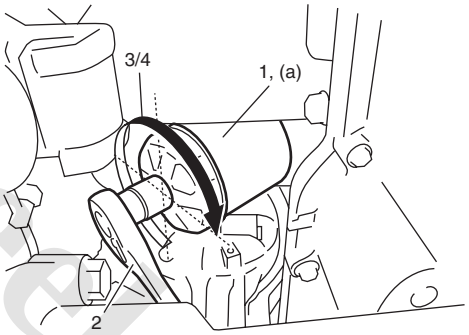


I5JB0A020021-01

www.cargeek.ir

www.CarGeek.ir

7) Replenish oil until oil level is brought to FULL level mark on dipstick. (oil pan and oil filter capacity). The filler inlet is at the top of the cylinder head cover. Use only engine oil of SG, SH, SJ, SL or SM grade. Select the appropriate oil viscosity according to the chart [A].
It is highly recommended to use SAE 5W-30 oil. However, SAE 10W-30 oil is usable for ambient temperatures above –18 °C (0 °F).

**NOTE**

**Engine oil capacity is specified below. However, note that the amount of oil required when actually changing oil may somewhat differ from the data depending on various conditions (temperature, viscosity, etc.)**

**Engine oil specifications (M16 Engine)**
**Oil pan capacity: About 4.0 liters (8.4 US pt. / 7.0 Imp pt.)**
**Oil filter capacity: About 0.2 liters (0.4 US pt. / 0.3 Imp pt.)**
**Others: About 0.3 liters (0.6 US pt. / 0.5 Imp pt.)**
**Total: About 4.5 liters (9.5 US pt. / 7.9 Imp pt.)**

**Engine oil specifications (J20 Engine)**
**Oil pan capacity: About 5.0 liters (10.5 US pt. / 8.8 Imp pt.)**
**Oil filter capacity: About 0.2 liters (0.4 US pt. / 0.3 Imp pt.)**
**Others: About 0.3 liters (0.6 US pt. / 0.5 Imp pt.)**
**Total: About 5.5 liters (11.6 US pt. / 9.6 Imp pt.)**

**Proper engine oil viscosity chart**

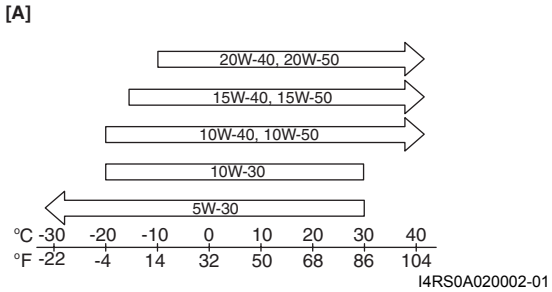


8) Check oil filter and drain plug for oil leakage.
9) Start engine and run it for 3 minutes. Stop it and wait 5 minutes before checking oil level. Add oil, as necessary, to bring oil level to FULL level mark (hole) (1) on dipstick.

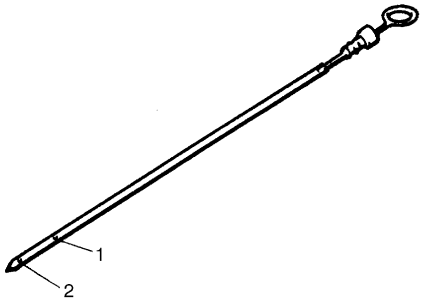


2. Low level mark (hole)

## Engine Coolant Change

S5JB0A0206005

**⚠ WARNING**

**To help avoid danger of being burned, do not remove radiator cap while engine and radiator are still hot. Scalding fluid and steam can be blown out under pressure if cap is taken off too soon.**

Change engine coolant referring to “Cooling System Flush and Refill: in Section 1F”.

www.cargeek.ir

www.CarGeek.ir


## Exhaust system Inspection

S5JB0A0206006

**⚠ WARNING**

**To avoid danger of being burned, do not touch exhaust system when it is still hot. Any service on exhaust system should be performed when it is cool.**

When carrying out periodic maintenance, or the vehicle is raised for other service, check exhaust system as follows:

- Check rubber mountings for damage, deterioration, and out of position.
- Check exhaust system for leakage, loose connections, dents and damages.
  If bolts or nuts are loose, tighten them to specification.

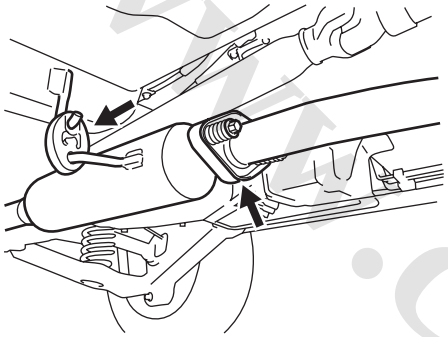

I5JB0A020022-01

- Check nearby body areas for damaged, missing, or mispositioned parts, open seams, holes, loose connections or other defects which could permit exhaust fumes to seep into the vehicle.
- Make sure that exhaust system components have enough clearance from the underbody to avoid overheating and possible damage to the floor carpet.
- Any defects should be fixed at once.

## Spark Plugs Replacement

S5JB0A0206010

Replace spark plugs with new ones referring to “Spark Plug Removal and Installation:  in Section 1H”.

## Air Cleaner Filter Inspection

S5JB0A0206014

Check that filter is not excessively dirty, damaged or oily and clean filter with compressed air from air outlet side of filter.
Refer to “Air Cleaner Filter Inspection and Cleaning: For M16A Engine with VVT in Section 1D” or “Air Cleaner Filter Inspection and Cleaning: For J20 Engine in Section 1D”.

## Air Cleaner Filter Replacement

S5JB0A0206013

Replace air cleaner filter with new one referring to “Air Cleaner Filter Removal and Installation: For M16A Engine with VVT in Section 1D” or “Air Cleaner Filter Removal and Installation: For J20 Engine in Section 1D”.

## Fuel Lines and Connections Inspection

S5JB0A0206016

Visually inspect fuel lines and connections for evidence of fuel leakage, hose cracking and damage. Make sure all clamps are secure.
Repair leaky joints, if any.
Replace hoses that are suspected of being cracked.

## Fuel Filter Replacement

S5JB0A0206015

**⚠ WARNING**

**This work must be performed in a well ventilated area and away from any open flames (such as gas hot water heaters).**

Fuel filter is installed in fuel pump assembly in fuel tank. Replace fuel filter or fuel pump assembly with new one, referring to “Fuel Pump Assembly Removal and Installation:  in Section 1G”.

## Fuel Tank Inspection

S5JB0A0206044

Check fuel tank for damage, cracks, fuel leakage, corrosion and tank bolts looseness.
If a problem is found, repair or replace.

## Crankcase Ventilation Hoses and Connections Inspection (Vehicle without A/F Sensor)

S5JB0A0206045

Check crankcase ventilation hose and connections for leaks, cracks or clog. Repair or replace if necessary.

## PCV Valve Inspection

S5JB0A0206046

Check crankcase ventilation hose and PCV hose for leaks, cracks or clog, and PCV valve for stick or clog. Refer to “PCV Valve Inspection:  in Section 1B” for PCV valve checking procedure.

www.cargeek.ir

www.CarGeek.ir

## Fuel Evaporative Emission Control System Inspection

S5JB0A0206047

1) Visually inspect hoses for cracks, damage, or excessive bends. Inspect all clamps for damage and proper position.
2) Check EVAP canister for operation and clog, referring to “EVAP Canister Inspection: in Section 1B”.
   If a malfunction is found, repair or replace.

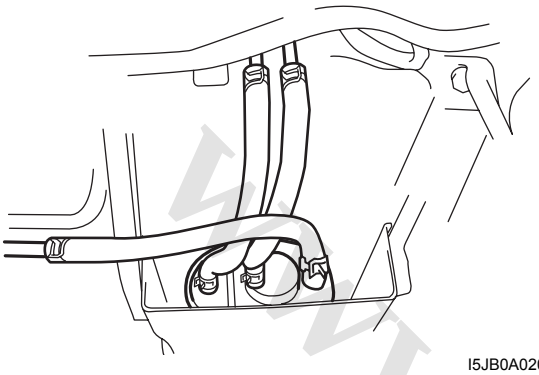

I5JB0A020005-01

## Brake Discs and Pads Inspection

S5JB0A0206019

Check front disc brake pads and discs for excessive wear, damage and deflection. Replace parts as necessary. For details, refer to “Front Brake Disc and Pad Inspection: in Section 4B”.

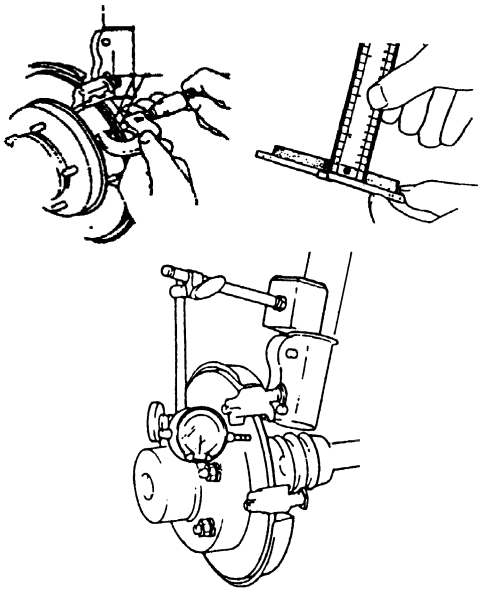

I5JB0A020006-01

## Brake Drums and Shoes Inspection

S5JB0A0206048

Check rear brake drums and brake linings for excessive wear and damage, while wheels and drums are removed. At the same time, check wheel cylinders for leaks. Replace these parts as necessary.
For details, refer to “Rear Brake Drum and Shoe Inspection: in Section 4C”.

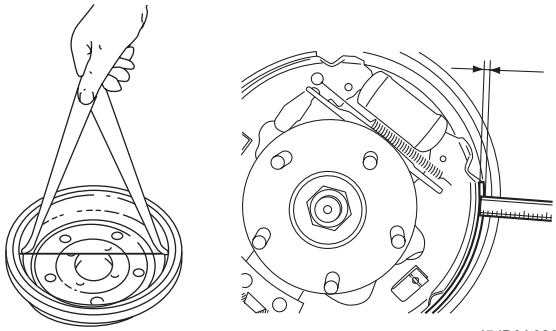

I5JB0A020007-02

## Brake Hoses and Pipes Inspection

S5JB0A0206020

Perform this inspection where there is enough light and use a mirror as necessary.
Check brake hoses and pipes for proper hookup, leaks, cracks, chafing and other damage.
Check that hoses and pipes are clear of sharp edges and moving parts.
Repair or replace any of these parts as necessary.

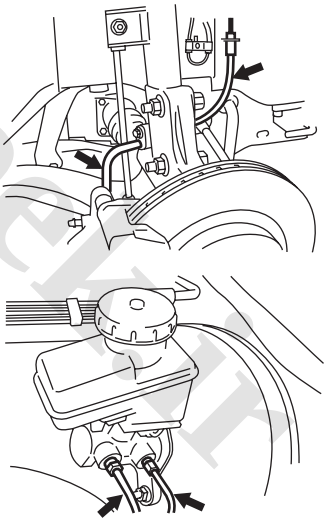

I5JB0A020008-01

## Brake Fluid Change

S5JB0A0206022

Change brake fluid as follows.

1) Drain existing fluid from brake system completely.
2) Fill reservoir with specified brake fluid indicated on reservoir cap. For the details, refer to “Brake Fluid Level Check: in Section 4A”.
3) Carry out air purge operation, referring to “Air Bleeding of Brake System: in Section 4A”.

www.cargeek.ir

www.CarGeek.ir


## Parking Brake Lever and Cable Inspection

S5JB0A0206024

1) Inspect brake cable for damage and smooth movement.
   Replace cable if it is in deteriorated condition.

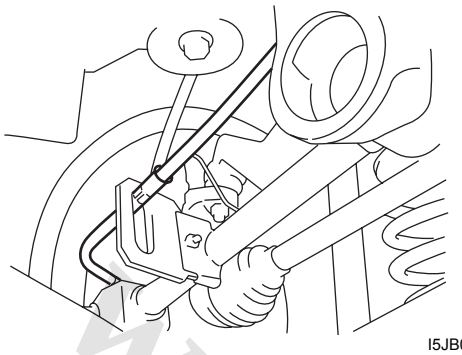

I5JB0A020023-01

2) Check tooth tip of each notch for damage or wear. If any damage or wear is found, replace parking lever.
3) Check parking brake lever for proper operation and stroke, and adjust it if necessary.
   For checking and adjusting procedures referring to "Parking Brake Check and Adjustment: in Section 4D".

   **Parking brake lever stroke**
   **"a": 5 – 7 notches (with 200 N (20 kg, 44 lbs) of pull pressure)**

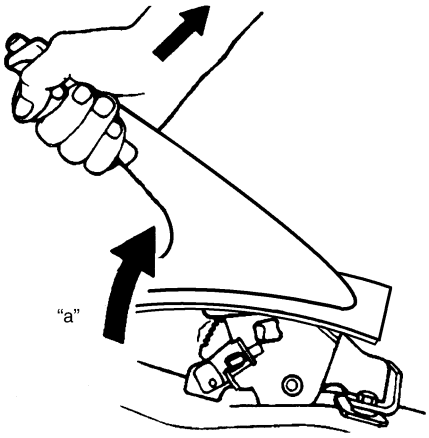


I5JB0A020024-01

## Clutch Fluid Inspection

S5JB0A0206018

1) Check system for evidence of fluid leakage.
   Repair leaky point if any.
2) Check reservoir for fluid level referring to "Clutch Fluid Inspection: in Section 5C".

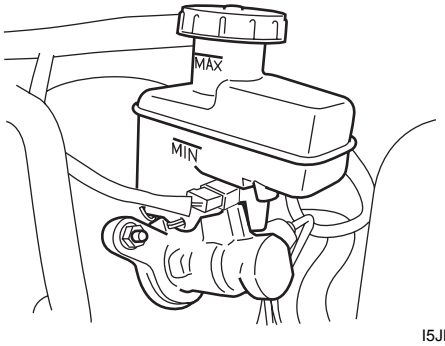


I5JB0A410005-01

## Tire / Wheel Inspection and Rotation

S5JB0A0206025

1) Check tires for uneven or excessive wear, or damage.
   If defective, replace. Refer to "Irregular and/or Premature Wear Description: in Section 2D" and "Wear Indicators Description: in Section 2D" for details.

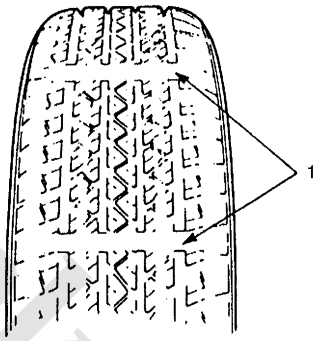


I2RH01240005-01

1. Wear indicator

2) Check inflating pressure of each tire and adjust pressure to specification as necessary. Refer to "Tires Description: in Section 2D" for details.

**NOTE**

- **Tire inflation pressure should be checked when tires are cool.**
- **Specified tire inflation pressure should be found on tire placard or in owner's manual which came with the vehicle.**

3) Rotate tires. For details, refer to "Tire Rotation: in Section 2D".

www.cargeek.ir

www.CarGeek.ir

## Wheel Discs Inspection

S5JB0A0206026

Inspect each wheel disc for dents, distortion and cracks. A disc in badly damaged condition must be replaced.

## Wheel Bearing Inspection

S5JB0A0206027

1) Check front wheel bearing for wear, damage, abnormal noise or rattles.
   For details, refer to “Front Wheel Hub, Disc, Nut and Bearing Check: in Section 2B”.
2) Check rear wheel bearing for wear, damage, abnormal noise or rattles.
   For details, refer to “Rear Wheel Disc, Nut and Bearing Check: in Section 2C”.

## Suspension System Inspection

S5JB0A0206028

Check suspension bolts and nuts painted with yellow for tightness and retighten them as necessary.
Repair or replace defective parts, if any.

### Front

- - Check stabilizer bushing for damage, wear or deformation.
  - Check stabilizer bar and joints for damage or deformation.
- - Inspect strut for damage, deformation, oil leakage and operation. If strut is found faulty, replace it as an assembly unit, because it can not be disassembled. Refer to “Front Strut Assembly Check: in Section 2B” for operation check.
  - Inspect strut dust cover for damage or crack.
- - Check ball joint stud dust seal (boot) for leaks, detachment, tear or other damage.
  - Check suspension control arm bushing for damage, wear or deterioration.

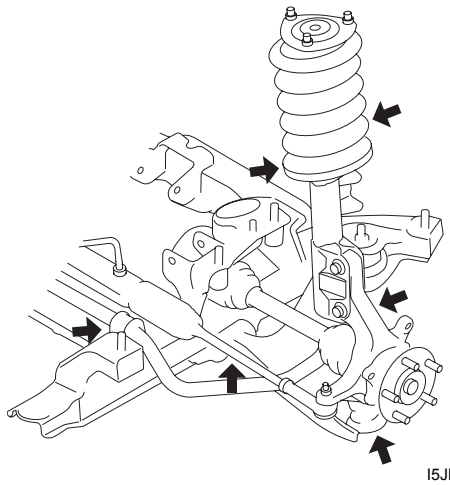

I5JB0A020009-01

- Check other suspension parts for damage, loose or missing parts; also for parts showing signs of wear or lack of lubrication. Replace any parts found defective.

### Rear

- - Check shock absorber for damage, deformation, oil leakage and operation.
- - Check coil spring, upper arm, lower arm, control rod and trailing rod for deformation and damage.
  - Check bushings of each suspension part for wear, damage and deterioration.
  - Check bump stopper for damage and deterioration
  - Check ball joint stud dust seal (boot) for leaks, detachment, tear or other damage.

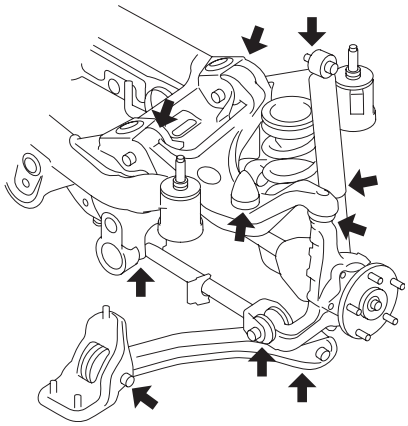

I5JB0A020010-01

- Check other suspension parts for damage, loose or missing parts; also for parts showing signs of wear or lack of lubrication. Replace any parts found defective.

## Steering System Inspection

S5JB0A0206037

1) Check steering wheel for play and rattle, holding vehicle in straight forward condition on the ground.

   **Steering wheel play**
   **“a”: 0 – 30 mm (0 – 1.2 in.)**

IYSQ01020050-01

2) Check universal joints of steering shaft for rattle and damage. If rattle or damage is found, replace defective part with a new one.
3) Check steering linkage for looseness and damage. Repair or replace defective part, if any.
4) Check bolts and nuts for tightness and retighten them as necessary.
   Repair or replace defective parts, if any.

www.cargeek.ir

www.CarGeek.ir


5) Check boots of steering linkage for damage (leaks, detachment, tear, dent, etc.). If damage is found, replace it with new one.
If any dent is found on steering rack boots, correct it to original shape by turning steering wheel to the right or left as far as it stops and holding it for a few seconds.

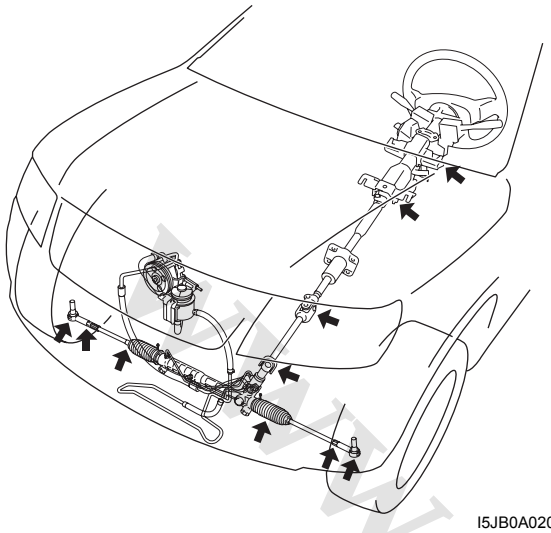

I5JB0A020011-02

6) Check wheel alignment referring to “Front Wheel Alignment Inspection and Adjustment: in Section 2B”.

## Propeller Shafts and Drive Shafts Inspection

S5JB0A0206029

### Propeller Shafts Inspection

1) Check universal joint and spline of propeller shaft for rattle. If rattle is found, replace defective part with a new one.

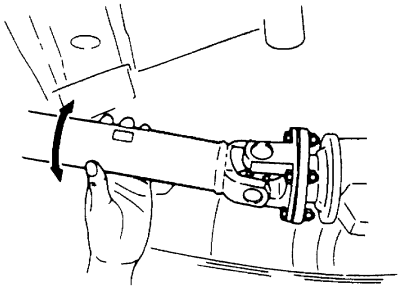

I5JB0A020019-02

2) Check propeller shaft (front and rear) flange yoke bolts for tightness, and retighten them as necessary. Refer to “Tightening Torque Specifications: in Section 3D”.

### Drive Shafts Inspection

Check drive axle boots (wheel side and differential side) (1) for leaks, detachment, tear or other damage. Replace boot as necessary.

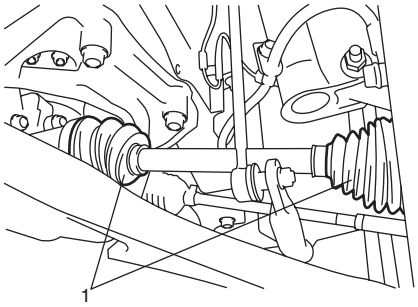


I5JB0A020012-01

## Manual Transmission Oil Inspection

S5JB0A0206030

1) Inspect transmission case for evidence of oil leakage. Repair leaky point if any.
2) Make sure that vehicle is placed level for oil level check.
3) Remove level / filler plug (1) of transmission.
4) Check oil level.
Oil level can be checked roughly by means of level plug hole. That is, if oil flows out of level plug hole or if oil level is found up to hole when level / filler plug is removed, oil is properly filled.
If oil is found insufficient, pour specified amount of specified oil.

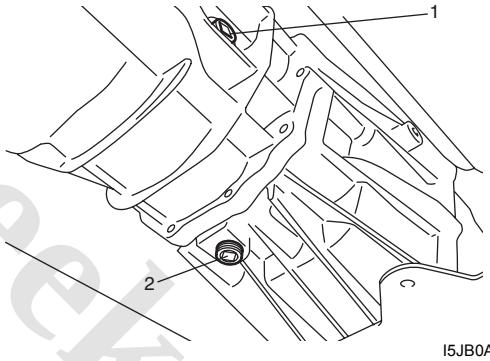


I5JB0A020013-01

| |
|---|
| 2. Drain plug |

5) Tighten level / filler plug to specified torque referring to “Manual Transmission Oil Change: in Section 5B”.

## Manual Transmission Oil Change

S5JB0A0206031

Change transmission oil with new specified oil referring to “Manual Transmission Oil Change: in Section 5B”.

## Automatic Transmission Fluid Inspection

S5JB0A0206032

1) Inspect transmission case for evidence of fluid leakage. Repair leaky point, if any.
2) Make sure that vehicle is placed level for fluid level check.
3) Check fluid level referring to “A/T Fluid Level Check: in Section 5A”. If fluid level is low, replenish specified fluid.

www.cargeek.ir

www.CarGeek.ir

## Automatic Transmission Fluid Change

S5JB0A0206033

1) Inspect transmission case for evidence of fluid leakage. Repair leaky point, if any.
2) Make sure that vehicle is placed level.
3) Change fluid referring to “A/T Fluid Change: in Section 5A”.

## Automatic Transmission Fluid Cooler Hose Inspection

S5JB0A0206034

Check automatic transmission fluid cooler hose for fluid leakage, cracks, damage and deterioration. Replace hose and/or clamp if any faulty condition is found.

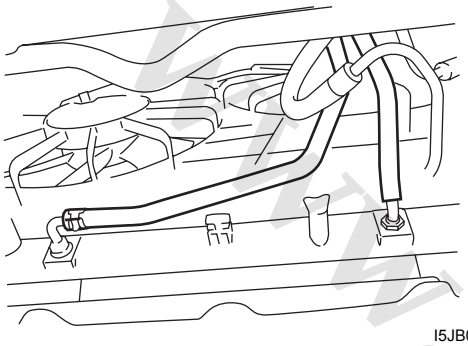

I5JB0A020025-02

## Transfer Oil Inspection (If Equipped)

S5JB0A0206049

1) Check transfer case for evidence of oil leakage. Repair leaky point if any.
2) Make sure that vehicle is placed level for oil level check.
3) Check oil level referring to “Transfer Oil Level Check: Motor-Shift Type (Transfer with Shift Actuator) in Section 3C” or “Transfer Oil Level Check: Non-Shift Type (Transfer without Shift Actuator) in Section 3C”.

## Differential Oil Inspection

S5JB0A0206035

1) Check differential for evidence of oil leakage. Repair leaky point if any.
2) Make sure that vehicle is placed level for oil level check.
3) Remove level / filler plug of differentials (front and/or rear) and check oil level.
   Oil level can be checked roughly by means of level plug hole. That is, if oil flows out of level plug hole or if oil level is found up to hole when level / filler plug is removed, oil is properly filled.
   If oil is found insufficient, pour specified amount of specified oil.

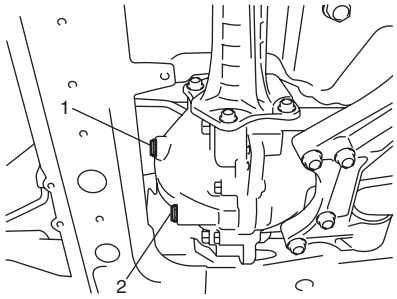


I5JB0A020015-03

| | |
|---|---|
| 1. Oil level / filler plug (Apply sealant.) | 2. Drain plug (Apply sealant.) |

4) Tighten level plug to specified torque.
   For front differential, refer to “Front Differential Oil Change: Front in Section 3B”.
   For rear differential, refer to “Rear Differential Oil Change: Rear in Section 3B”.

## Transfer (If Equipped) and Differential Oil Change

S5JB0A0206036

Change transfer oil and differential oil (front and rear) with new specified oil respectively.
For transfer, refer to “Transfer Oil Change: Motor-Shift Type (Transfer with Shift Actuator) in Section 3C” or “Transfer Oil Change: Non-Shift Type (Transfer without Shift Actuator) in Section 3C”.
For front differential, refer to “Front Differential Oil Change: Front in Section 3B”.
For rear differential, refer to “Rear Differential Oil Change: Rear in Section 3B”.

www.cargeek.ir

www.CarGeek.ir


## Power Steering (P/S) System Inspection

S5JB0A0206038

1) Visually check power steering system for fluid leakage and hose for damage and deterioration. Repair or replace defective parts, if any.

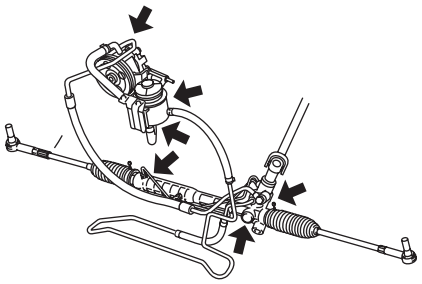

I5JB0A020016-02

2) Check fluid level with engine stopped. If it is lower than LOWER level line, fill fluid up to UPPER level line.

**NOTE**

**Fluid level should be checked when fluid is cool.**

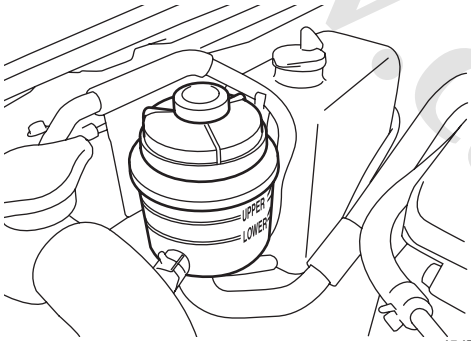


I5JB0A020017-01

3) Visually check pump drive belt for cracks and wear.
4) Check P/S pump drive belt for tension, referring to "Engine Accessory Drive Belt Inspection: ". If necessary, Adjust or replace it.

## All Hinges, Latches and Locks Inspection

S5JB0A0206039

### Doors

Check that each door of front, rear and back (rear end) doors opens and closes smoothly and locks securely when closed.
If any malfunction is found, lubricate hinge and latch or repair door lock system.

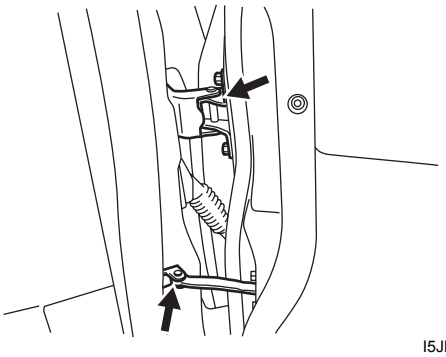

I5JB0A020026-01

### Engine Hood

Check that secondary latch operates properly (check that secondary latch keeps hood from opening all the way even when pulling hood release handle inside vehicle.) Also check that hood opens and closes smoothly and properly and hood locks securely when closed.
If any malfunction is found, lubricate hinge and latch, or repair hood lock system.

## HVAC Air Filter Inspection (If Equipped)

S5JB0A0206040

Check air filter for dirt and damage. Clean or replace if necessary referring to "HVAC Air Filter Inspection: in Section 7B".

## HVAC Air Filter Replacement (If Equipped)

S5JB0A0206041

Replace air filter with new one referring to "HVAC Air Filter Removal and Installation: in Section 7B".

## Final Inspection for Maintenance Service

S5JB0A0206042

**⚠ WARNING**

**When carrying out road tests, select a safe place where no man or no running vehicle is seen so as to prevent any accident.**

### Seats

Check that seat slides smoothly and locks securely at any position. Also check that reclining mechanism of front seat back allows it to be locked at any angle.

### Seat Belt

Inspect belt system including webbing, buckles, latch plates, retractors and anchors for damage or wear. Check that seat belt is securely locked.

### Battery Check

Check battery for damage, terminal corrosion and condition.
If battery is equipped with built-in indicator, check battery condition by the indicator.

### Accelerator Pedal Operation

Check that pedal operates smoothly without getting caught or interfered by any other part.

www.cargeek.ir

www.CarGeek.ir

**Engine Start**
Check engine start for readiness.

**⚠ WARNING**

**Before performing the following check, be sure to have enough room around the vehicle. Then, firmly apply both the parking brake and the regular brakes. Do not use the accelerator pedal. If the engine starts, be ready to turn off the ignition promptly. Take these precautions because the vehicle could move without warning and possibly cause personal injury or property damage.**

On A/T vehicles, try to start the engine in each select lever position. The starting motor should crank only in “P” (Park) or “N” (Neutral).
On M/T vehicles, place the shift lever in “Neutral,” depress clutch pedal fully and try to start.

**Exhaust System Check**
Check for leakage, cracks or loose supports.

**Clutch (for Manual Transmission)**
Check for the following.

- Clutch is completely released when depressing clutch pedal,
- No slipping clutch occurs when releasing pedal and accelerating.
- Clutch itself is free from any abnormal condition.

**Gearshift or Select Lever (Transmission)**
Check gear shift or select lever for smooth shifting to all positions and for good performance of transmission in any position.
With A/T vehicle, also check that shift indicator indicates properly according to which position select lever is shifted to.
With A/T vehicle, make sure that vehicle is at complete stop when shifting select lever to “P” range position and release all brakes.

**Transfer (Selectable 4WD)**
Check that transfer position indicator on instrument cluster turns on properly according to transfer switch position.

**Brake**

**Foot brake**
Check the following:

- that brake pedal has proper travel,
- that brake works properly,
- that it is free from noise,
- that vehicle does not pull to one side when brake is applied,
- and that brake do not drag.

**Parking brake**
Check that lever has proper travel.

**⚠ WARNING**

**With vehicle parked on a fairly steep slope, make sure nothing is in the way downhill to avoid any personal injury or property damage. Be prepared to apply regular brake quickly even if vehicle should start to move.**

Check to ensure that parking brake is fully effective when the vehicle is stopped on the safe slope and brake lever is pulled all the way.

**Steering**

- Check to ensure that steering wheel is free from instability, or abnormally heavy feeling.
- Check that the vehicle does not wander or pull to one side.

**Engine**

- Check that engine responds readily at all speeds.
- Check that engine is free from abnormal noise and abnormal vibration.

**Body, Wheels and Power Transmitting System**
Check that body, wheels and power transmitting system are free from abnormal noise and abnormal vibration or any other abnormal condition.

**Meters and Gauge**
Check that speedometer, odometer, fuel meter, temperature gauge, etc. are operating accurately.

**Lights**
Check that all lights operate properly.

**Windshield Defroster**
Periodically check that air comes out from defroster outlet when operating heater or air conditioning.
Set fan switch lever to “HI” position for this check.

www.cargeek.ir

www.CarGeek.ir


# Specifications

## Tightening Torque Specifications

S5JB0A0207001

| Fastening part | Tightening torque | | | Note |
|---|---|---|---|---|
| | N·m | kgf-m | lb-ft | |
| Engine oil drain plug | 35 | 3.5 | 25.5 | ☞ |
| Oil filter | 14 | 1.4 | 10.5 | ☞ |

**Reference:**
For the tightening torque of fastener not specified in this section, refer to “Fastener Information: in Section 0A”.

# Special Tools and Equipment

## Recommended Fluids and Lubricants

S5JB0A0208001

### Fluids / Lubricants List

| | |
|---|---|
| Engine oil | Refer to “Engine Oil and Filter Change: ”. |
| Engine coolant<br>(Ethylene glycol base coolant) | “Antifreeze / Anticorrosion coolant” |
| Brake fluid | Refer to reservoir cap of brake master cylinder. |
| Manual transmission oil | Refer to “Manual Transmission Oil Change: in Section 5B”. |
| Transfer oil | Refer to “Transfer Oil Change: Non-Shift Type (Transfer without Shift Actuator) in Section 3C” or “Transfer Oil Change: Motor-Shift Type (Transfer with Shift Actuator) in Section 3C”. |
| Differential oil (front & rear) | Refer to “Front Differential Oil Change: Front in Section 3B”, or “Rear Differential Oil Change: Rear in Section 3B”. |
| Automatic transmission fluid | Refer to “A/T Fluid Change: in Section 5A”. |
| Power steering fluid | An equivalent of DEXRON®-II |
| Clutch linkage pivot points | Water resistance chassis grease<br>(SUZUKI SUPER GREASE A 99000-25010) |
| Door hinges | Engine oil or water resistance chassis grease |
| Hood latch assembly | |
| Key lock cylinder | Spray lubricant |

## Special Tool

S5JB0A0208002

| | |
|---|---|
| 09915–40611<br>Oil filter wrench socket<br>☞ 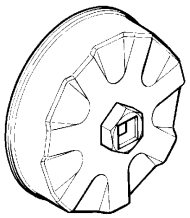 | |

www.cargeek.ir

www.CarGeek.ir

www.cargeek.ir

www.cargeek.ir

www.CarGeek.ir


# Section 1

# Engine

## CONTENTS

**Precautions ..... 1-1**
**Precautions ..... 1-1**
Precautions for Engine ..... 1-1

**Engine General Information and Diagnosis ..... 1A-1**
**Precautions ..... 1A-1**
Precautions on Engine Service ..... 1A-1
Precautions in Diagnosing Trouble ..... 1A-1
Precautions For DTC Troubleshooting ..... 1A-2
Precautions of ECM Circuit Inspection ..... 1A-2
Precautions of Electric Throttle Body System Calibration ..... 1A-2
**General Description ..... 1A-2**
Statement on Cleanliness and Care ..... 1A-2
Engine Diagnosis General Description ..... 1A-3
On-Board Diagnostic System Description ..... 1A-3
Engine and Emission Control System Description ..... 1A-6
CAN Communication System Description ..... 1A-6
Air Intake System Description ..... 1A-9
Description of Electric Throttle Body System ..... 1A-10
Description of Electric Throttle Body System Calibration ..... 1A-11
Generator Control System Description ..... 1A-11
A/F Sensor Description ..... 1A-12
Electronic Control System Description ..... 1A-13
Engine and Emission Control Input / Output Table ..... 1A-21
**Schematic and Routing Diagram ..... 1A-22**
Engine and Emission Control System Diagram ..... 1A-22
**Component Location ..... 1A-23**
Electronic Control System Components Location ..... 1A-23
**Diagnostic Information and Procedures ..... 1A-25**
Engine and Emission Control System Check ..... 1A-25
Malfunction Indicator Lamp (MIL) Check ..... 1A-28
DTC Check ..... 1A-28
DTC Clearance ..... 1A-29
DTC Table ..... 1A-30
Fail-Safe Table ..... 1A-36
Scan Tool Data ..... 1A-37
Visual Inspection ..... 1A-43
Engine Basic Inspection ..... 1A-44
Engine Symptom Diagnosis ..... 1A-48
Malfunction Indicator Lamp Does Not Come ON with Ignition Switch ON and Engine Stop (but Engine Can Be Started) ..... 1A-57
Malfunction Indicator Lamp Remains ON after Engine Starts ..... 1A-59
DTC P0010: Camshaft Position Actuator Circuit (For M16 Engine) ..... 1A-60
DTC P0011 / P0012: Camshaft Position - Timing Over-Advanced or System Performance / -Retarded (For M16 Engine) ..... 1A-62
DTC P0030: HO2S Heater Control Circuit (Sensor-1) ..... 1A-64
DTC P0031 / P0032: HO2S Heater Control Circuit Low / High (Sensor-1) ..... 1A-65
DTC P0037 / P0038: HO2S Heater Control Circuit Low / High (Sensor-2) ..... 1A-69
DTC P0101: Mass Air Flow Circuit Range / Performance ..... 1A-72
DTC P0102: Mass Air Flow Circuit Low Input ..... 1A-75
DTC P0103: Mass Air Flow Circuit High Input ..... 1A-77
DTC P0106: Manifold Absolute Pressure Range / Performance ..... 1A-79
DTC P0107: Manifold Absolute Pressure Circuit Low Input ..... 1A-80
DTC P0108: Manifold Absolute Pressure Circuit High Input ..... 1A-82
DTC P0111: Intake Air Temperature Circuit Range / Performance ..... 1A-84
DTC P0112: Intake Air Temperature Sensor Circuit Low ..... 1A-87
DTC P0113: Intake Air Temperature Sensor Circuit High ..... 1A-89
DTC P0116: Engine Coolant Temperature Circuit Range / Performance ..... 1A-91
DTC P0117: Engine Coolant Temperature Circuit Low ..... 1A-94
DTC P0118: Engine Coolant Temperature Circuit High ..... 1A-95
DTC P0122: Throttle Position Sensor (Main) Circuit Low ..... 1A-98
DTC P0123: Throttle Position Sensor (Main) Circuit High ..... 1A-101
DTC P0131 / P0132 / P0134: O2 Sensor (HO2S) Circuit Low Voltage / High Voltage / No Activity Detected (Sensor-1) ..... 1A-104
DTC P0133: O2 Sensor (HO2S) Circuit Slow Response (Sensor-1) ..... 1A-105

www.cargeek.ir

www.CarGeek.ir

DTC P0137 / P0138: O2 Sensor (HO2S) Circuit Low Voltage / High Voltage (Sensor-2) ..... 1A-107
DTC P0140: O2 Sensor (HO2S) Circuit No Activity Detected (Sensor-2) ..... 1A-110
DTC P0171 / P0172 / P2195 / P2196: Fuel System Too Lean / Rich / Stuck Lean / Stuck Rich ..... 1A-111
DTC P0222: Throttle Position Sensor (Sub) Circuit Low ..... 1A-115
DTC P0223: Throttle Position Sensor (Sub) Circuit High ..... 1A-118
DTC P0300 / P0301 / P0302 / P0303 / P0304: Random Misfire Detected / Cylinder 1 / Cylinder 2 / Cylinder 3 / Cylinder 4 Misfire Detected ..... 1A-121
DTC P0327 / P0328: Knock Sensor Circuit Low / High ..... 1A-123
DTC P0335: Crankshaft Position (CKP) Sensor Circuit (For J20 Engine) ..... 1A-125
DTC P0335: Crankshaft Position (CKP) Sensor Circuit (For M16 Engine) ..... 1A-127
DTC P0340: Camshaft Position (CMP) Sensor Circuit ..... 1A-130
DTC P0401 / P0402: Exhaust Gas Recirculation Flow Insufficient Detected / Excessive Detected ..... 1A-133
DTC P0403: Exhaust Gas Recirculation Control Circuit ..... 1A-136
DTC P0420: Catalyst System Efficiency below Threshold ..... 1A-138
DTC P0443: Evaporative Emission System Purge Control Valve Circuit ..... 1A-140
DTC P0462: Fuel Level Sensor Circuit Low ..... 1A-142
DTC P0463: Fuel Level Sensor Circuit High ..... 1A-144
DTC P0480: Fan 1 (Radiator Cooling Fan) Control Circuit ..... 1A-146
DTC P0500: Vehicle Speed Sensor (VSS) Malfunction ..... 1A-150
DTC P0504: Brake Switch “A”/“B” Correlation (For J20 Engine) ..... 1A-152
DTC P0532: A/C Refrigerant Pressure Sensor Circuit Low ..... 1A-154
DTC P0533: A/C Refrigerant Pressure Sensor Circuit High ..... 1A-156
DTC P0601 / P0602 / P0607: Internal Control Module Memory Check Sum Error / Control Module Programming Error / Control Module Performance ..... 1A-157
DTC P0616: Starter Relay Circuit Low ..... 1A-158
DTC P0617: Starter Relay Circuit High ..... 1A-160
DTC P0620: Generator Control Circuit ..... 1A-161
DTC P0625 / P0626: Generator Field Terminal Circuit Low / High ..... 1A-163
DTC P0660: Intake Manifold Tuning Valve Control Circuit / Open (For J20 Engine) ..... 1A-165
DTC P1501 / P1502: Electric Load Current Sensor Circuit Low / High ..... 1A-167
DTC P1510: ECM Back-Up Power Supply Malfunction ..... 1A-169
DTC P1603: TCM Trouble Code Detected (For J20 Engine) ..... 1A-170
DTC P1674: CAN Communication (Bus Off Error) ..... 1A-171
DTC P1676: CAN Communication (Reception Error for TCM (for A/T model)) ..... 1A-176
DTC P1678: CAN Communication (Reception Error for BCM) ..... 1A-180
DTC P1685: CAN Communication (Reception Error for ABS Control Module) ..... 1A-184
DTC P2101: Throttle Actuator Control Motor Circuit Range / Performance ..... 1A-187
DTC P2102: Throttle Actuator Control Motor Circuit Low ..... 1A-189
DTC P2103: Throttle Actuator Control Motor Circuit High ..... 1A-191
DTC P2111: Throttle Actuator Control System - Stuck Open ..... 1A-192
DTC P2119: Throttle Actuator Control Throttle Body Range / Performance ..... 1A-193
DTC P2122: Pedal Position Sensor (Main) Circuit Low Input ..... 1A-195
DTC P2123: Pedal Position Sensor (Main) Circuit High Input ..... 1A-198
DTC P2127: Pedal Position Sensor (Sub) Circuit Low Input ..... 1A-200
DTC P2128: Pedal Position Sensor (Sub) Circuit High Input ..... 1A-202
DTC P2135: Throttle Position Sensor (Main / Sub) Voltage Correlation ..... 1A-205
DTC P2138: Pedal Position Sensor (Main / Sub) Voltage Correlation ..... 1A-208
DTC P2227 / P2228 / P2229: Barometric Pressure Circuit Malfunction ..... 1A-210
Inspection of ECM and Its Circuits ..... 1A-212
ECM Power and Ground Circuit Check ..... 1A-234
Fuel Injector Circuit Check ..... 1A-238
Fuel Pump and Its Circuit Check ..... 1A-240
Fuel Pressure Check ..... 1A-243
A/C System Circuits Check ..... 1A-245
Electric Load Signal Circuit Check ..... 1A-248
Radiator Cooling Fan Low Speed Control System Check ..... 1A-250
Radiator Cooling Fan High Speed Control System Check ..... 1A-253
**Repair Instructions ..... 1A-255**
Idle Speed and IAC Throttle Valve Opening Inspection ..... 1A-255
**Special Tools and Equipment ..... 1A-256**
Special Tool ..... 1A-256

## Aux. Emission Control Devices ..... 1B-1

**Diagnostic Information and Procedures ..... 1B-1**
EGR System Inspection ..... 1B-1
**Repair Instructions ..... 1B-1**
EVAP Canister Purge Inspection ..... 1B-1
EVAP Canister Purge Valve and Its Circuit Inspection ..... 1B-2
Vacuum Passage Inspection ..... 1B-2

www.cargeek.ir

www.CarGeek.ir


Vacuum Hose and Purge Valve Chamber Inspection ..... 1B-3
EVAP Canister Purge Valve Inspection ..... 1B-3
EVAP Canister Inspection ..... 1B-4
EGR Valve Removal and Installation ..... 1B-4
EGR Valve Inspection ..... 1B-4
PCV Hose Inspection ..... 1B-4
PCV Valve Removal and Installation ..... 1B-5
PCV Valve Inspection ..... 1B-5
**Specifications ..... 1B-6**
Tightening Torque Specifications ..... 1B-6
**Special Tools and Equipment ..... 1B-6**
Recommended Service Material ..... 1B-6
Special Tool ..... 1B-6

## Engine Electrical Devices ..... 1C-1

**Repair Instructions ..... 1C-1**
Engine Control Module (ECM) Removal and Installation ..... 1C-1
Manifold Absolute Pressure (MAP) Sensor Inspection ..... 1C-1
Electric Throttle Body Assembly On-Vehicle Inspection ..... 1C-2
Electric Throttle Body System Calibration ..... 1C-4
Accelerator Pedal Position (APP) Sensor Assembly On-Vehicle Inspection ..... 1C-5
Accelerator Pedal Position (APP) Sensor Assembly Removal and Installation ..... 1C-5
Accelerator Pedal Position (APP) Sensor Assembly Inspection ..... 1C-6
Engine Coolant Temperature (ECT) Sensor Removal and Installation ..... 1C-6
Engine Coolant Temperature (ECT) Sensor Inspection ..... 1C-7
Air Fuel Ratio (A/F) Sensor On-Vehicle Inspection ..... 1C-7
Heated Oxygen Sensor (HO2S-2) Heater On-Vehicle Inspection ..... 1C-8
Air Fuel Ratio (A/F) Sensor, Heated Oxygen Sensor (HO2S-2) Removal and Installation ..... 1C-8
Camshaft Position (CMP) Sensor Removal and Installation ..... 1C-8
Camshaft Position (CMP) Sensor Inspection ..... 1C-9
Crankshaft Position (CKP) Sensor Removal and Installation ..... 1C-9
Crankshaft Position (CKP) Sensor Inspection ..... 1C-10
Knock Sensor Removal and Installation ..... 1C-11
Control Relay Inspection ..... 1C-12
Mass Air Flow (MAF) and Intake Air Temperature (IAT) Sensor On-Vehicle Inspection ..... 1C-13
Mass Air Flow (MAF) and Intake Air Temperature (IAT) Sensor Removal and Installation ..... 1C-13
Mass Air Flow (MAF) and Intake Air Temperature (IAT) Sensor Inspection ..... 1C-14
Vacuum Tank Assembly Inspection (For J20 Engine) ..... 1C-14
Electric Load Current Sensor On-Vehicle Inspection (For J20 Engine) ..... 1C-16
Electric Load Current Sensor Removal and Installation (For J20 Engine) ..... 1C-16
**Specifications ..... 1C-17**
Tightening Torque Specifications ..... 1C-17

## Engine Mechanical ..... 1D-1

***For M16A Engine with VVT ..... 1D-1***
**General Description ..... 1D-1**
Engine Construction Description ..... 1D-1
Camshaft Position Control (VVT Variable Valve Timing) System Description ..... 1D-2
**Diagnostic Information and Procedures ..... 1D-4**
Compression Check ..... 1D-4
Engine Vacuum Check ..... 1D-5
Valve Lash (Clearance) Inspection ..... 1D-6
**Repair Instructions ..... 1D-8**
Air Cleaner Filter Removal and Installation ..... 1D-8
Air Cleaner Filter Inspection and Cleaning ..... 1D-9
Cylinder Head Cover Removal and Installation ..... 1D-9
Throttle Body and Intake Manifold Components ..... 1D-11
Throttle Body On-Vehicle Inspection ..... 1D-11
Electric Throttle Body Assembly Removal and Installation ..... 1D-12
Throttle Body Cleaning ..... 1D-12
Intake Manifold Removal and Installation ..... 1D-13
Engine Mountings Components ..... 1D-14
Engine Assembly Removal and Installation ..... 1D-14
Timing Chain Cover Components ..... 1D-18
Timing Chain Cover Removal and Installation ..... 1D-19
Timing Chain Cover Inspection ..... 1D-21
Oil Control Valve Removal and Installation ..... 1D-21
Oil Control Valve Inspection ..... 1D-22
Timing Chain and Chain Tensioner Components ..... 1D-23
Timing Chain and Chain Tensioner Removal and Installation ..... 1D-23
Timing Chain and Chain Tensioner Inspection ..... 1D-26
Camshaft, Tappet and Shim Components ..... 1D-27
Camshaft, Tappet and Shim Removal and Installation ..... 1D-27
Camshaft, Tappet and Shim Inspection ..... 1D-30
Valves and Cylinder Head Components ..... 1D-33
Valves and Cylinder Head Removal and Installation ..... 1D-34
Valves and Cylinder Head Disassembly and Assembly ..... 1D-35
Valves and Valve Guides Inspection ..... 1D-38
Cylinder Head Inspection ..... 1D-40
Valve Spring Inspection ..... 1D-41
Pistons, Piston Rings, Connecting Rods and Cylinders Components ..... 1D-42
Pistons, Piston Rings, Connecting Rods and Cylinders Removal and Installation ..... 1D-42

www.cargeek.ir

www.CarGeek.ir

Pistons, Piston Rings, Connecting Rods and Cylinders Disassembly and Assembly .....1D-44
Cylinders, Pistons and Piston Rings Inspection .....1D-45
Piston Pins and Connecting Rods Inspection .....1D-47
Crank Pin and Connecting Rod Bearings Inspection .....1D-48
Main Bearings, Crankshaft and Cylinder Block Components .....1D-52
Main Bearings, Crankshaft and Cylinder Block Removal and Installation .....1D-53
Crankshaft Inspection .....1D-56
Main Bearings Inspection .....1D-57
Sensor Plate Inspection .....1D-61
Rear Oil Seal Inspection .....1D-61
Flywheel Inspection .....1D-62
Cylinder Block Inspection .....1D-62
**Specifications .....1D-63**
Tightening Torque Specifications .....1D-63
**Special Tools and Equipment .....1D-64**
Recommended Service Material .....1D-64
Special Tool .....1D-64
***For J20 Engine .....1D-66***
**General Description .....1D-66**
Engine Construction Description .....1D-66
Air Cleaner Element Introduction .....1D-68
IMT (Intake Manifold Tuning) System .....1D-68
**Diagnostic Information and Procedures .....1D-70**
Compression Check .....1D-70
Engine Vacuum Check .....1D-71
Valve Lash (Clearance) Inspection .....1D-72
**Repair Instructions .....1D-75**
Air Cleaner Assembly Removal and Installation .....1D-75
Air Cleaner Filter Removal and Installation .....1D-75
Air Cleaner Filter Inspection and Cleaning .....1D-75
Throttle Body and Intake Manifold Components .....1D-76
Throttle Body On-Vehicle Inspection .....1D-76
Electric Throttle Body Assembly Removal and Installation .....1D-76
Throttle Body Cleaning .....1D-77
Intake Manifold Removal and Installation .....1D-77
Cylinder Head Cover Removal and Installation .....1D-78
Engine Mountings Components .....1D-80
Engine Assembly Removal and Installation .....1D-81
Timing Chain Cover Components .....1D-84
Timing Chain Cover Removal and Installation .....1D-84
Timing Chain Cover Cleaning and Inspection .....1D-87
2nd Timing Chain and Chain Tensioner Components .....1D-87
2nd Timing Chain and Chain Tensioner Removal and Installation .....1D-88
2nd Timing Chain and Chain Tensioner Inspection .....1D-90
1st Timing Chain and Chain Tensioner Components .....1D-91
1st Timing Chain and Chain Tensioner Removal and Installation .....1D-92
1st Timing Chain and Chain Tensioner Inspection .....1D-94
Camshafts, Tappet and Shim Components .....1D-95
Camshafts, Tappet and Shim Removal and Installation .....1D-95
Camshaft, Tappet and Shim Inspection .....1D-97
Valves and Cylinder Head Components .....1D-99
Valves and Cylinder Head Removal and Installation .....1D-99
Valves and Cylinder Head Disassembly and Assembly .....1D-101
Valves and Valve Guides Inspection .....1D-104
Cylinder Head Inspection .....1D-106
Valve Spring Inspection .....1D-107
Pistons, Piston Rings, Connecting Rods and Cylinders Components .....1D-108
Pistons, Piston Rings, Connecting Rods and Cylinders Removal and Installation .....1D-108
Pistons, Piston Rings, Connecting Rods and Cylinders Disassembly and Assembly .....1D-109
Pistons, Piston Rings, Connecting Rods and Cylinders Inspection and Cleaning .....1D-112
Main Bearings, Crankshaft and Cylinder Block Components .....1D-118
Main Bearings, Crankshaft and Cylinder Block Removal and Installation .....1D-119
Main Bearings, Crankshaft and Cylinder Block Inspection .....1D-122
**Specifications .....1D-129**
Tightening Torque Specifications .....1D-129
**Special Tools and Equipment .....1D-130**
Recommended Service Material .....1D-130
Special Tool .....1D-130

## Engine Lubrication System ..... 1E-1

***For M16A Engine with VVT .....1E-1***
**General Description .....1E-1**
Engine Lubrication Description .....1E-1
**Diagnostic Information and Procedures .....1E-3**
Oil Pressure Check .....1E-3
**Repair Instructions .....1E-4**
Oil Pan and Oil Pump Strainer Components .....1E-4
Oil Pan and Oil Pump Strainer Removal and Installation .....1E-5
Oil Pan and Oil Pump Strainer Cleaning .....1E-6
Oil Pump Components .....1E-7
Oil Pump Removal and Installation .....1E-7
Oil Pump Disassembly and Reassembly .....1E-7
Oil Pump Inspection .....1E-8
**Specifications .....1E-10**
Tightening Torque Specifications .....1E-10
**Special Tools and Equipment .....1E-10**
Recommended Service Material .....1E-10
Special Tool .....1E-10
***For J20 Engine .....1E-11***

www.cargeek.ir

www.CarGeek.ir


**General Description** ..... **1E-11**
Engine Lubrication Description ..... 1E-11
**Diagnostic Information and Procedures** ..... **1E-13**
Oil Pressure Check ..... 1E-13
**Repair Instructions** ..... **1E-14**
Oil Pan and Oil Pump Strainer Components..... 1E-14
Oil Pan and Oil Pump Strainer Removal and Installation ..... 1E-15
Oil Pan and Oil Pump Strainer Cleaning..... 1E-16
Oil Pump Components ..... 1E-16
Oil Pump Removal and Installation ..... 1E-17
Oil Pump Disassembly and Assembly ..... 1E-17
Oil Pump Inspection ..... 1E-18
**Specifications** ..... **1E-19**
Tightening Torque Specifications..... 1E-19
**Special Tools and Equipment** ..... **1E-20**
Recommended Service Material ..... 1E-20
Special Tool ..... 1E-20

## Engine Cooling System ..... 1F-1

**General Description** ..... **1F-1**
Cooling System Description ..... 1F-1
Coolant Description ..... 1F-1
**Schematic and Routing Diagram** ..... **1F-2**
Coolant Circulation ..... 1F-2
**Diagnostic Information and Procedures** ..... **1F-3**
Engine Cooling Symptom Diagnosis..... 1F-3
**Repair Instructions** ..... **1F-4**
Cooling System Components ..... 1F-4
Coolant Level Check ..... 1F-6
Engine Cooling System Inspection and Cleaning ..... 1F-6
Cooling System Draining ..... 1F-7
Cooling System Flush and Refill ..... 1F-7
Cooling Water Pipes or Hoses Removal and Installation ..... 1F-8
Thermostat Removal and Installation (For M16 Engine Model) ..... 1F-8
Thermostat Removal and Installation (For J20 Engine Model) ..... 1F-9
Thermostat Inspection ..... 1F-9
Radiator Cooling Fan Motor On-Vehicle Inspection ..... 1F-10
Radiator Cooling Fan Relay Inspection..... 1F-10
Radiator Cooling Fan Assembly Removal and Installation ..... 1F-11
Radiator On-Vehicle Inspection and Cleaning ..... 1F-11
Radiator Removal and Installation ..... 1F-12
Water Pump Removal and Installation (For M16 Engine Model) ..... 1F-12
Water Pump Removal and Installation (For J20 Engine Model) ..... 1F-13
Water Pump Inspection ..... 1F-14
**Specifications** ..... **1F-14**
Tightening Torque Specifications..... 1F-14
**Special Tools and Equipment** ..... **1F-14**
Recommended Service Material ..... 1F-14

## Fuel System ..... 1G-1

**Precautions** ..... **1G-1**
Precautions on Fuel System Service ..... 1G-1
**General Description** ..... **1G-1**
Fuel System Description ..... 1G-1
Fuel Delivery System Description ..... 1G-1
Fuel Pump Description ..... 1G-2
**Schematic and Routing Diagram** ..... **1G-2**
Fuel Delivery System Diagram..... 1G-2
**Diagnostic Information and Procedures** ..... **1G-3**
Fuel Pressure Inspection ..... 1G-3
Fuel Cut Operation Inspection ..... 1G-4
**Repair Instructions** ..... **1G-5**
Fuel System Components ..... 1G-5
Fuel Hose Disconnecting and Reconnecting ..... 1G-8
Fuel Pressure Relief Procedure ..... 1G-10
Fuel Leakage Check Procedure..... 1G-10
Fuel Lines On-Vehicle Inspection ..... 1G-11
Fuel Pipe Removal and Installation..... 1G-11
Fuel Injector On-Vehicle Inspection ..... 1G-11
Fuel Injector Removal and Installation ..... 1G-12
Fuel Injector Inspection ..... 1G-13
Fuel Pressure Regulator Removal and Installation ..... 1G-15
Fuel Pressure Regulator Inspection..... 1G-15
Fuel Filler Cap Inspection ..... 1G-16
Fuel Tank Inlet Valve Removal and Installation ..... 1G-16
Fuel Tank Inlet Valve Inspection ..... 1G-17
Fuel Tank Removal and Installation..... 1G-17
Fuel Tank Inspection ..... 1G-19
Fuel Tank Purging Procedure ..... 1G-19
Fuel Pump On-Vehicle Inspection..... 1G-19
Fuel Pump Assembly Removal and Installation ..... 1G-20
Main Fuel Level Sensor Removal and Installation ..... 1G-21
Fuel Pump Inspection ..... 1G-21
Sub Fuel Level Sensor Removal and Installation ..... 1G-21
Sub Fuel Level Sensor Inspection ..... 1G-22
**Specifications** ..... **1G-22**
Tightening Torque Specifications..... 1G-22
**Special Tools and Equipment** ..... **1G-23**
Recommended Service Material ..... 1G-23
Special Tool ..... 1G-23

## Ignition System ..... 1H-1

**General Description** ..... **1H-1**
Ignition System Construction ..... 1H-1
**Schematic and Routing Diagram** ..... **1H-2**
Ignition System Wiring Circuit Diagram..... 1H-2
**Component Location** ..... **1H-3**
Ignition System Components Location..... 1H-3
**Diagnostic Information and Procedures** ..... **1H-4**
Ignition System Symptom Diagnosis..... 1H-4
Reference Waveform of Ignition System..... 1H-4
Ignition System Check ..... 1H-4

www.cargeek.ir

www.CarGeek.ir

Ignition Spark Test ..... 1H-6
**Repair Instructions ..... 1H-7**
High-Tension Cord Removal and Installation (For M16 Engine) ..... 1H-7
High-Tension Cord Inspection (For M16 Engine) ..... 1H-7
Spark Plug Removal and Installation ..... 1H-7
Spark Plug Inspection ..... 1H-8
Ignition Coil Assembly (Including ignitor) Removal and Installation ..... 1H-8
Ignition Coil Assembly (Including ignitor) Inspection ..... 1H-9
Ignition Timing Inspection ..... 1H-9
**Specifications ..... 1H-11**
Tightening Torque Specifications ..... 1H-11
**Special Tools and Equipment ..... 1H-11**
Special Tool ..... 1H-11

## Starting System ..... 1I-1

**Precautions ..... 1I-1**
Cranking System Note ..... 1I-1
**General Description ..... 1I-1**
Cranking Circuit Introduction ..... 1I-1
Starting Motor Circuit Description ..... 1I-1
**Diagnostic Information and Procedures ..... 1I-2**
Cranking System Symptom Diagnosis ..... 1I-2
Starting Motor Performance Test ..... 1I-3
**Repair Instructions ..... 1I-5**
Starting Motor Dismounting and Remounting ..... 1I-5
Starting Motor Components ..... 1I-6
Starting Motor Inspection ..... 1I-7
**Specifications ..... 1I-10**
Starting Motor Specifications ..... 1I-10
Tightening Torque Specifications ..... 1I-10
**Special Tools and Equipment ..... 1I-10**
Recommended Service Material ..... 1I-10

## Charging System ..... 1J-1

**General Description ..... 1J-1**
Battery Description ..... 1J-1
Generator Description ..... 1J-2
**Diagnostic Information and Procedures ..... 1J-3**
Battery Inspection ..... 1J-3
Generator Symptom Diagnosis ..... 1J-4
Generator Test (Undercharged Battery Check) ..... 1J-4
Generator Test (Overcharged Battery Check) ..... 1J-5
**Repair Instructions ..... 1J-6**
Jump Starting in Case of Emergency ..... 1J-6
Battery Dismounting and Remounting ..... 1J-7
Water Pump and Generator Drive Belt Removal and Installation (For M16 Engine) ..... 1J-7
Water Pump and Generator Drive Belt Tension Inspection and Adjustment (For M16 Engine) ..... 1J-8
Water Pump and Generator Drive Belt On-Vehicle Inspection (For J20 Engine) ..... 1J-9
Water Pump and Generator Drive Belt Removal and Installation (For J20 Engine) ..... 1J-10
Generator Dismounting and Remounting ..... 1J-11
Generator Components ..... 1J-12
Generator Inspection ..... 1J-13
**Specifications ..... 1J-16**
Charging System Specifications ..... 1J-16
Tightening Torque Specifications ..... 1J-16

## Exhaust System ..... 1K-1

**General Description ..... 1K-1**
Exhaust System Description ..... 1K-1
**Diagnostic Information and Procedures ..... 1K-1**
Exhaust System Check ..... 1K-1
**Repair Instructions ..... 1K-1**
Exhaust System Components ..... 1K-1
Exhaust Manifold Removal and Installation (For M16 Engine Model) ..... 1K-4
Exhaust Manifold Removal and Installation (For J20 Engine Model) ..... 1K-4
Exhaust Pipe and Muffler Removal and Installation ..... 1K-5
**Specifications ..... 1K-6**
Tightening Torque Specifications ..... 1K-6

www.cargeek.ir

www.CarGeek.ir


# Precautions

## Precautions

### Precautions for Engine

S5JB0A1000001

**Air Bag Warning**
Refer to “Air Bag Warning: in Section 00”.

**Precautions on Engine Service**
Refer to “Precautions on Engine Service: in Section 1A”.

**Precautions in Diagnosing Trouble**
Refer to “Precautions in Diagnosing Trouble: in Section 1A”.

**Precautions on Fuel System Service**
Refer to “Precautions on Fuel System Service: in Section 1G”.

**Engine Cooling System Warning**
Refer to “Coolant Description: in Section 1F”.

**Cranking System Note**
Refer to “Cranking System Note: in Section 1I”.

**Exhaust System Caution**
Refer to “Exhaust System Check: in Section 1K”.

**Precaution for CAN Communication System**
Refer to “Precaution for CAN Communication System: in Section 00”.

**Precautions for Catalytic Converter**
Refer to “Precautions for Catalytic Converter: in Section 00”.

**Precautions for Electrical Circuit Service**
Refer to “Precautions for Electrical Circuit Service: in Section 00”.

**Precautions of ECM Circuit Inspection**
Refer to “Precautions of ECM Circuit Inspection: in Section 1A”.

**Precautions of Electric Throttle Body System Calibration**
Refer to “Precautions of Electric Throttle Body System Calibration: in Section 1A”.

**Precaution in Replacing ECM**
Refer to “Precaution in Replacing ECM: in Section 10C”.

www.cargeek.ir

www.CarGeek.ir

# Engine General Information and Diagnosis

## Precautions

### Precautions on Engine Service

S5JB0A1100001

**⚠ CAUTION**

**The following information on engine service should be noted carefully, as it is important in preventing damage, and in contributing to reliable engine performance.**

- When raising or supporting engine for any reason, do not use a jack under oil pan. Due to small clearance between oil pan and oil pump strainer, jacking against oil pan may cause it to be bent against strainer, resulting in damaged oil pick-up unit.
- It should be kept in mind, while working on engine, that 12-volt electrical system is capable of violent and damaging short circuits.
  When performing any work where electrical terminals can be grounded, ground cable of the battery should be disconnected at battery.
- Any time the air cleaner, throttle body or intake manifold is removed, the intake opening should be covered. This will protect against accidental entrance of foreign material which could follow intake passage into cylinder and cause extensive damage when engine is started.

### Precautions in Diagnosing Trouble

S5JB0A1100002

- Don't disconnect couplers from ECM, battery cable from battery, ECM ground wire harness from engine or main fuse before confirming diagnostic information (DTC, freeze frame data, etc.) stored in ECM memory. Such disconnection will erase memorized information in ECM memory.
- Diagnostic information stored in ECM memory can be cleared as well as checked by using SUZUKI scan tool or OBD generic scan tool (Vehicle without diagnosis connector). Before using scan tool, read its Operator's (Instruction) Manual carefully to have good understanding as to what functions are available and how to use it.
  It is indistinguishable which module turns on MIL because not only ECM but also TCM (for A/T model) turns on MIL (For details of on-board diagnostic system for A/T model, refer to "On-Board Diagnostic System Description: in Section 5A". Therefore, check both ECM and TCM (for A/T model) for DTC when MIL lights on.
  When checking ECM for DTC, keep in mind that DTC is displayed on the scan tool as follows depending on the scan tool used.
  - SUZUKI scan tool displays DTC detected by ECM.
  - OBD generic scan tool displays DTC detected by each of ECM and TCM (for A/T model) simultaneously.
- Priorities for diagnosing troubles
  If two or more DTCs are stored, proceed to the DTC flow which has been detected earliest in the order and follow the instruction in that flow.
  If no instructions are given, troubleshoot DTCs according to the following priorities.
  a. DTCs other than DTC P0171 / P0172 (Fuel system too lean / too rich), DTC P0300 / P0301 / P0302 / P0303 / P0304 (Misfire detected) and DTC P0401 / P0402 (EGR flow malfunction)
  b. DTC P0171 / P0172 (Fuel system too lean / too rich) and DTC P0401 / P0402 (EGR flow malfunction)
  c. DTC P0300 / P0301 / P0302 / P0303 / P0304 (Misfire detected)
- Be sure to read "Precautions for Electrical Circuit Service: in Section 00" before inspection and observe what is written there.
- ECM replacement:
  When substituting a known-good ECM, check for the following conditions. Neglecting this check may cause damage to a known-good ECM.
  - Resistance value of all relays, actuators is as specified respectively.
  - MAP sensor, electric load current sensor (for J20 engine), A/C refrigerant pressure sensor (if equipped with A/C), accelerator pedal position (APP) sensor, TP sensor and CO adjust resistor (if not equipped with A/F sensor) are in good condition and none of power circuits of these sensors is shorted to ground.
- Communication of ECM, BCM, combination meter, keyless start control module (if equipped) ABS hydraulic unit / control module assembly, 4WD control module (for J20 engine) and TCM (for A/T model), is established by CAN (Controller Area Network). (For more detail of CAN communication for ECM, refer to "CAN Communication System Description: ").
  Therefore, handle CAN communication line with care referring to "Precaution for CAN Communication System: in Section 00".
- Immobilizer transponder code registration after replacing ECM
  When ECM is replaced with new one or with another one, make sure to register immobilizer transponder code to ECM correctly according to "Procedure after ECM Replacement: in Section 10C".

www.cargeek.ir

www.CarGeek.ir


### Precautions For DTC Troubleshooting

S5JB0A1100005

- Before performed trouble shooting, be sure to read the “Precautions of ECM Circuit Inspection: ”.
- When measuring circuit voltage, resistance and/or pulse signal at ECM connector, connect the special tool to ECM and/or the ECM connectors referring to “Inspection of ECM and Its Circuits: ”.
- Upon completion of inspection and repair work, perform “DTC Confirmation Procedure” and confirm that the trouble has been corrected.

### Precautions of ECM Circuit Inspection

S5JB0A1100003

- ECM connectors are waterproofed. Each terminal of the ECM connectors is sealed up with the grommet. Therefore, when measuring circuit voltage, resistance and/or pulse signal at ECM connector, do not insert the tester’s probe into the sealed terminal at the harness side. When measuring circuit voltage, resistance and/or pulse signal at ECM connector, connect the special tool to the ECM connectors. And, insert the tester’s probe into the special tool’s connectors at the harness side, and then measure voltage, resistance and/or pulse signal. Or, ECM and its circuits may be damaged by water.
- Wire colors of the special tool’s connectors are different from the ones of the ECM connectors. However, the circuit arrangement of the special tool’s connectors is same as the one of the ECM connectors. Therefore, measure circuit voltage and resistance by identifying the terminal location subject to the measurement.

### Precautions of Electric Throttle Body System Calibration

S5JB0A1100004

After performing one of works described below, it is necessary to re-register the completely closed throttle valve reference position stored in memory of ECM. (For detailed information, refer to “Description of Electric Throttle Body System Calibration: ”.) For the procedure to register such data in ECM, refer to “Electric Throttle Body System Calibration:  in Section 1C”.

- To shut off backup power of ECM for such purposes of battery replacement or “DOME” fuse removal
- To erase DTCs P0122, P0123, P0222, P0223, P2101, P2102, P2103, P2111, P2119 and/or P2135
- To replace ECM
- To replace throttle body and/or accelerator pedal position (APP) sensor assembly

## General Description

### Statement on Cleanliness and Care

S5JB0A1101001

An automobile engine is a combination of many machined, honed, polished and lapped surfaces with tolerances that are measured in the thousands of an millimeter (ten thousands of an inch).
Accordingly, when any internal engine parts are serviced, care and cleanliness are important.
It should be understood that proper cleaning and protection of machined surfaces and friction areas is part of the repair procedure. This is considered standard shop practice even if not specifically stated.

- A liberal coating of engine oil should be applied to friction areas during assembly to protect and lubricate the surfaces on initial operation.
- Whenever valve train components, pistons, piston rings, connecting rods, rod bearings, and crankshaft journal bearings are removed for service, they should be retained in order.
  At the time of installation, they should be installed in the same locations and with the same mating surfaces as when removed.
- Battery cables should be disconnected before any major work is performed on the engine.
  Failure to disconnect cables may result in damage to wire harness or other electrical parts.
- The four cylinders of the engine are identified by numbers; No.1 (1), No.2 (2), No.3 (3) and No.4 (4) counted from crankshaft pulley side to flywheel side.

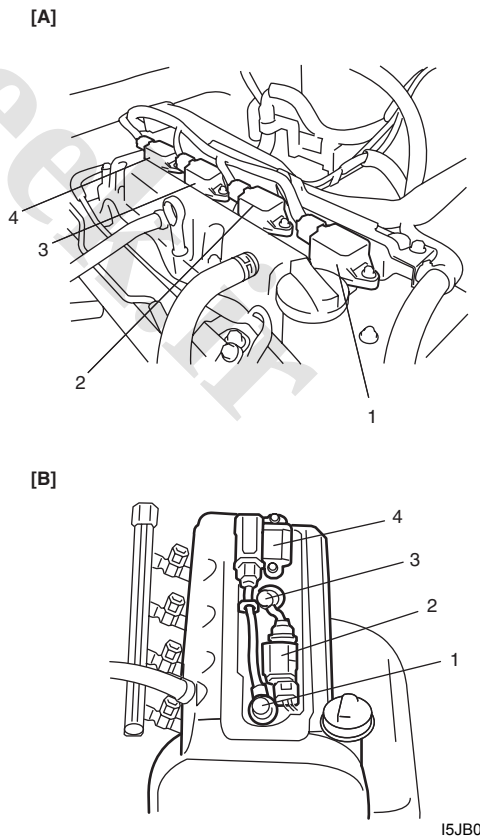


I5JB0A110001-02

| | |
|---|---|
| [A]: | J20 engine |
| [B]: | M16 engine |

www.cargeek.ir

www.CarGeek.ir

## Engine Diagnosis General Description

S5JB0A1101002

This vehicle is equipped with an engine and emission control system which are under control of ECM.
The engine and emission control system in this vehicle are controlled by ECM. ECM has an On-Board Diagnostic system which detects a malfunction in this system and abnormality of those parts that influence the engine exhaust emission. When diagnosing engine troubles, be sure to have full understanding of the outline of “On-Board Diagnostic System Description: ” and each item in “Precautions in Diagnosing Trouble: ” and execute diagnosis according to “Engine and Emission Control System Check: ”.
There is a close relationship between the engine mechanical, engine cooling system, ignition system, exhaust system, etc. and the engine and emission control system in their structure and operation. In case of an engine trouble, even when the malfunction indicator lamp (MIL) doesn’t turn ON, it should be diagnosed according to “Engine and Emission Control System Check: ”.

## On-Board Diagnostic System Description

S5JB0A1101003

**Vehicle not Equipped with Diagnosis Connector**

ECM in this vehicle has the following functions.

- When the ignition switch is turned ON with the engine at a stop, malfunction indicator lamp (MIL) (1) turns ON to check the circuit of the malfunction indicator lamp (1).
- When ECM detects a malfunction which gives an adverse effect to vehicle emission while the engine is running, it makes the malfunction indicator lamp (1) in the meter cluster of the instrument panel turn ON or flash (flashing only when detecting a misfire which can cause damage to the catalyst) and stores the malfunction area in its memory.
  (If it detects that continuously 3 driving cycles are normal after detecting a malfunction, however, it makes MIL (1) turn OFF although DTC stored in its memory will remain.)
- As a condition for detecting a malfunction in some areas in the system being monitored by ECM and turning ON the malfunction indicator lamp (1) due to that malfunction, 2 driving cycle detection logic is adopted to prevent erroneous detection.
- When a malfunction is detected, engine and driving conditions then are stored in ECM memory as freeze frame data. (For the details, refer to description on “Freeze Frame Data (Vehicle Not Equipped with Diagnosis Connector): ”.)
- It is possible to communicate by using not only SUZUKI scan tool (2) but also OBD generic scan tool. (Diagnostic information can be accessed by using a scan tool.)

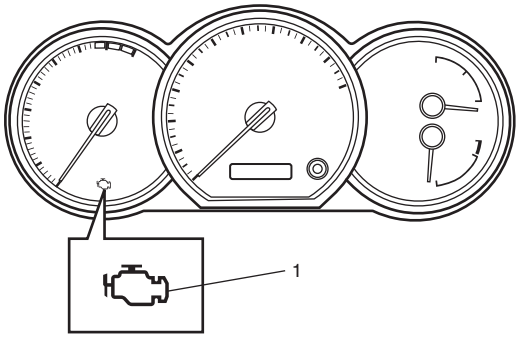


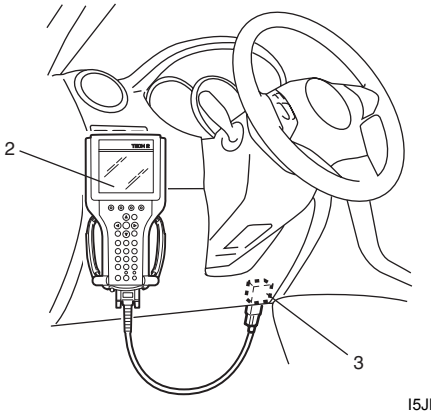


I5JB0A110002-01

| |
|---|
| 3. DLC |

**Vehicle Equipped with Diagnosis Connector**

ECM diagnosis troubles which may occur in the area including the following parts when the ignition switch is ON and the engine is running, and indicates the result by turning on or flashing malfunction indicator lamp (1).

- A/F sensor (if equipped)
- Heated oxygen sensor (if equipped)
- ECT sensor
- TP sensor
- MAF sensor
- IAT sensor
- MAP sensor
- CMP sensor
- CKP sensor
- Knock sensor
- Wheel speed sensor
- CPU (Central Processing Unit) of ECM
- APP sensor
- Oil control valve (for M16 engine)
- Radiator cooling fan relay

ECM and malfunction indicator lamp (1) operate as follows.

- Malfunction indicator lamp (1) lights when the ignition switch is turned ON (but the engine at stop) with the diagnosis switch terminal ungrounded regardless of the condition of Engine and Emission control system. This is only to check the malfunction indicator lamp (1) in the combination meter and its circuit.

www.cargeek.ir

www.CarGeek.ir


- If the above areas of Engine and Emission control system is free from any trouble after the engine start (while engine is running), malfunction indicator lamp (1) turns OFF.
- When ECM detects a trouble which has occurred in the above areas, it makes malfunction indicator lamp (1) turn ON while the engine is running to warn the driver of such occurrence of trouble and at the same time it stores the trouble area in ECM back-up memory. (The memory is kept as it is even if the trouble was only temporary and disappeared immediately. And it is not erased unless the power to ECM is shut off for specified time or it is cleared by SUZUKI scan tool (2).)
  In addition, DTC can be read by not only using SUZUKI scan tool but also displayed on odometer (5) of the combination meter. (i.e. when diagnosis switch terminal (3) is grounded with a service wire (4) and ignition switch is turned ON.) For further detail of the checking procedure, refer to “DTC Check: ”.

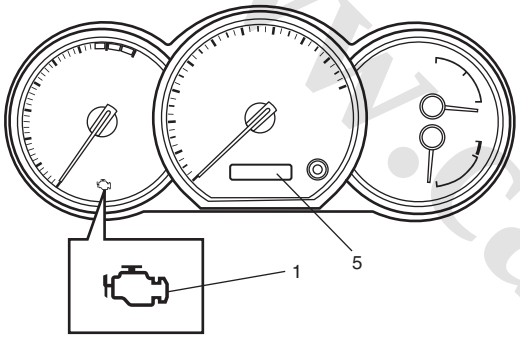


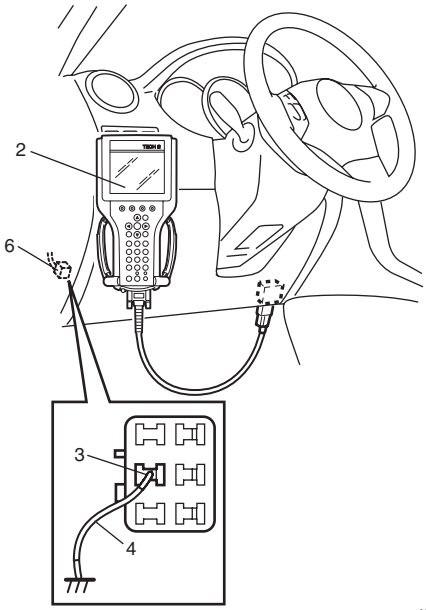


I5JB0A110003-01

| |
|---|
| 6. Diagnosis connector |

**Warm-Up Cycle**
A warm-up cycle means sufficient vehicle operation such that the coolant temperature has risen by at least 22 °C (40 °F) from engine starting and reaches a minimum temperature of 70 °C (160 °F).

**Driving Cycle**
A “Driving Cycle” consists of engine startup and engine shutoff.

**2 Driving Cycle Detection Logic**
The malfunction detected in the first driving cycle is stored in ECM memory (in the form of pending DTC) but the malfunction indicator lamp does not light at this time. It lights up at the second detection of same malfunction also in the next driving cycle.

**Pending DTC**
Pending DTC means a DTC detected and stored temporarily at 1 driving cycle of the DTC which is detected in the 2 driving cycle detection logic.

**Freeze Frame Data (Vehicle Not Equipped with Diagnosis Connector)**
ECM stores the engine and driving conditions (in the form of data as shown in the figure) at the moment of the detection of a malfunction in its memory. This data is called “Freeze frame data”.
Therefore, it is possible to know engine and driving conditions (e.g., whether the engine was warm or not, where the vehicle was running or stopped, where air/fuel mixture was lean or rich) when a malfunction was detected by checking the freeze frame data. Also, ECM has a function to store each freeze frame data for three different malfunctions in the order as each malfunction is detected. Utilizing this function, it is possible to know the order of malfunctions that have been detected. Its use is helpful when rechecking or diagnosing a trouble.

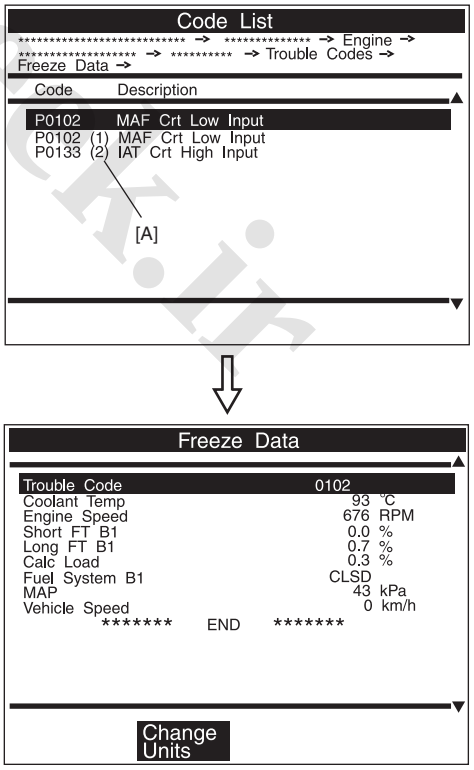


I3RB0A110002-01

| |
|---|
| [A]: 1st or 2nd in parentheses here represents which position in the order the malfunction is detected. |

www.cargeek.ir

www.CarGeek.ir

**Priority of freeze frame data:**
ECM has 4 frames where the freeze frame data can be stored. The first frame stores the freeze frame data of the malfunction which was detected first. However, the freeze frame data stored in this frame is updated according to the priority described. (If malfunction as described in the upper square “1” is detected while the freeze frame data in the lower square “2” has been stored, the freeze frame data “2” will be updated by the freeze frame data “1”.)

| Priority | Freeze frame data in frame 1 |
|---|---|
| 1 | Freeze frame data at initial detection of malfunction among misfire detected (P0300 – P0304), fuel system too lean (P0171) and fuel system too rich (P0172) |
| 2 | Freeze frame data when a malfunction other than those in “1” is detected |

In the 2nd through the 4th frames, the freeze frame data of each malfunction is stored in the order as each malfunction is detected. These data are not updated.
Shown in the table are examples of how freeze frame data are stored when two or more malfunctions are detected.

| Malfunction detected order | | Frame | | | |
|---|---|---|---|---|---|
| | | Frame 1 | Frame 2 | Frame 3 | Frame 4 |
| | | Freeze frame data to be updated | 1st freeze frame data | 2nd freeze frame data | 3rd freeze frame data |
| No malfunction | | No freeze frame data | | | |
| 1 | P0401 (EGR) detected | Data at P0401 detection | Data at P0401 detection | — | — |
| 2 | P0171 (Fuel system) detected | Data at P0171 detection | Data at P0401 detection | Data at P0171 detection | — |
| 3 | P0300 (Misfire) detected | Data at P0171 detection | Data at P0401 detection | Data at P0171 detection | Data at P0300 detection |
| 4 | P0301 (Misfire) detected | Data at P0171 detection | Data at P0401 detection | Data at P0171 detection | Data at P0300 detection |

**Freeze frame data clearance:**
The freeze frame data is cleared at the same time as clearance of DTC.

**Data Link Connector (DLC)**
DLC (1) is in compliance with SAE J1962 in the shape of connector and pin assignment.
OBD serial data line (3) (K line of ISO 9141) is used for SUZUKI scan tool or OBD generic scan tool to communicate with ECM, Air bag SDM, immobilizer control module (in ECM), BCM (Body electrical Control Module), TCM (Transmission Control Module (for A/T model)) 4WD control module (for J20 engine) and ABS hydraulic unit / control module assembly.

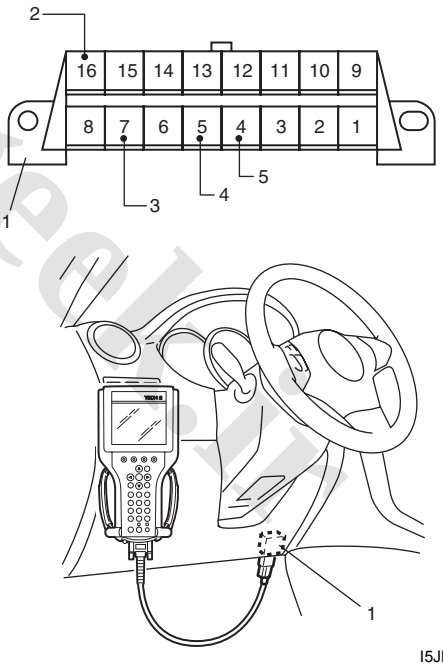

I5JB0A110004-01

| | |
|---|---|
| 2. | B + (Unswitched vehicle battery positive) |
| 4. | ECM ground (Signal ground) |
| 5. | Vehicle body ground (Chassis ground) |

www.cargeek.ir

www.CarGeek.ir


## Engine and Emission Control System Description

S5JB0A1101004

The engine and emission control system is divided into 4 major sub-systems: air intake system, fuel delivery system, electronic control system and emission control system.
Air intake system includes air cleaner, throttle body, and intake manifold.
Fuel delivery system includes fuel pump, delivery pipe, etc.
Electronic control system includes ECM, various sensors and controlled devices.
Emission control system includes EGR, EVAP and PCV system.

## CAN Communication System Description

S5JB0A1101005

ECM (1), ABS hydraulic unit / control module assembly (2), TCM (for A/T model) (3), BCM (4), 4WD control module (for J20 engine) (5), combination meter (6) and keyless start control module (if equipped) (7) of this vehicle communicate control data between each control module.
Communication of each control module is established by CAN (Controller Area Network) communication system.

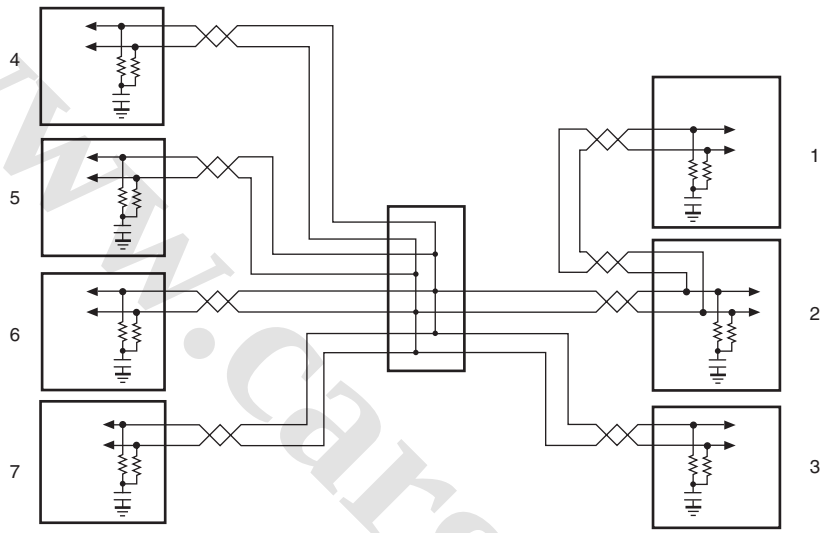


I5JB0A110005-01

CAN communication system uses the serial communication in which data is transmitted at a high speed. It uses a twisted pair of two communication lines for the high-speed data transmission. As one of its characteristics, multiple control modules can communicate simultaneously. In addition, it has a function to detect a communication error automatically. Each module reads necessary data from the received data and transmits data. ECM communicates control data with each control module as follows.

www.cargeek.ir

www.CarGeek.ir

## ECM Transmission Data

| | | | | TCM (for A/T model) | ABS hydrauric unit/control module assembly | BCM | Combination Meter | 4WD control module (for J20 engine) | Keyless Start Control Module (if equipped) |
|---|---|---|---|---|---|---|---|---|---|
| ECM | Transmit | DATA | Engine torque signal | ○ | | | | | |
| | | | Accelerator pedal position | ○ | | | | | |
| | | | Engine speed | ○ | | ○ | ○ | ○ | |
| | | | Throttle position | ○ | | | | | |
| | | | Stand by to engage air conditioning compressor | ○ | | | | | |
| | | | Top gear inhibit | ○ | | | | | |
| | | | Torque converter clutch control inhibit | ○ | | | | | |
| | | | Lock up / slip control inhibit signal | ○ | | | | | |
| | | | Immobilizer indication | | | | ○ | | |
| | | | Engine emissions related malfunction | | | | ○ | | |
| | | | Engine coolant temperature | ○ | | ○ | ○ | | |
| | | | Fuel level percent | | | | ○ | | |
| | | | Cruise control signal (if equipped) | ○ | | | | | |
| | | | Cruise control system indication (if equipped) | | | | ○ | | |
| | | | Vehicle speed | ○ | | ○ | ○ | ○ | ○ |
| | | | Brake pedal switch active | ○ | ○ | ○ | | | |
| | | | Air conditioning compressor clutch engaged (if equipped with A/C) | ○ | | ○ | | | |
| | | | Distance kilometers per liter of fuel | | | ○ | | | |
| | | | Engine diagnostic trouble codes (if equipped with diagnosis connector) | | | | ○ | | |

I5JB0A110006-02

**NOTE**

**In communication between ECM and combination meter, between ECM and keyless start control module (if equipped) and between ECM and 4WD control module (for J20 engine), data is transmitted only from ECM to combination meter, keyless start control module (if equipped) and 4WD control module (for J20 engine). (Combination meter, keyless start control module (if equipped) and 4WD control module (for J20 engine) does not transmit data to ECM.)**

www.cargeek.ir

www.CarGeek.ir


## ECM Reception Data

| | | | | TCM (for A/T model) | ABS hydraulic unit/control module assmbly | BCM |
|---|---|---|---|---|---|---|
| ECM | Receive | DATA | Torque reduction request | ○ | | |
| | | | Slip control signal | ○ | | |
| | | | Transmission malfunction indication on | ○ | | |
| | | | Transmission emissions related malfunction active | ○ | | |
| | | | Transmission gear selector position | ○ | | |
| | | | Daytime running light active (if equipped with DRL) | | | ○ |
| | | | Air conditioning switch ON (if equipped with A/C) | | | ○ |
| | | | A/T mode status | | | ○ |
| | | | Electric load active (low beam) | | | ○ |
| | | | Electric load active (high beam) | | | ○ |
| | | | Electric load active (tail light) | | | ○ |
| | | | Electric load active (rear defogger) | | | ○ |
| | | | Blower fan step | | | ○ |
| | | | Torque up request | | ○ | |
| | | | Torque request rolling count | | ○ | |
| | | | Wheel speed pulse (rear right) | | ○ | |
| | | | Wheel speed pulse (rear left) | | ○ | |
| | | | Antilock brake system active | | ○ | |

I5JB0A110007-01

www.cargeek.ir

www.CarGeek.ir

## Air Intake System Description

S5JB0A1101006

The main components of the air intake system are air cleaner (1), air cleaner outlet hose (2), electric throttle body (3) (for the details, refer to “Description of Electric Throttle Body System: ”.), intake manifold tuning (IMT) valve (4) which adjusts the distributor pipe length of intake manifold to (A) or (B) (for J20 engine) (for the details, refer to “IMT (Intake Manifold Tuning) System: For J20 Engine in Section 1D”.) and intake manifold (5).
The air (by the amount corresponding to throttle valve (6) opening and engine speed) is filtered by the air cleaner, distributed by the intake, and finally drawn into each combustion chamber.Electric throttle body is not equipped with IAC valve for idle speed control. Idle speed control is done by the throttle actuator (7) which opens/closes the throttle valve. (For the details, refer to “Description of Electric Throttle Body System: ”)

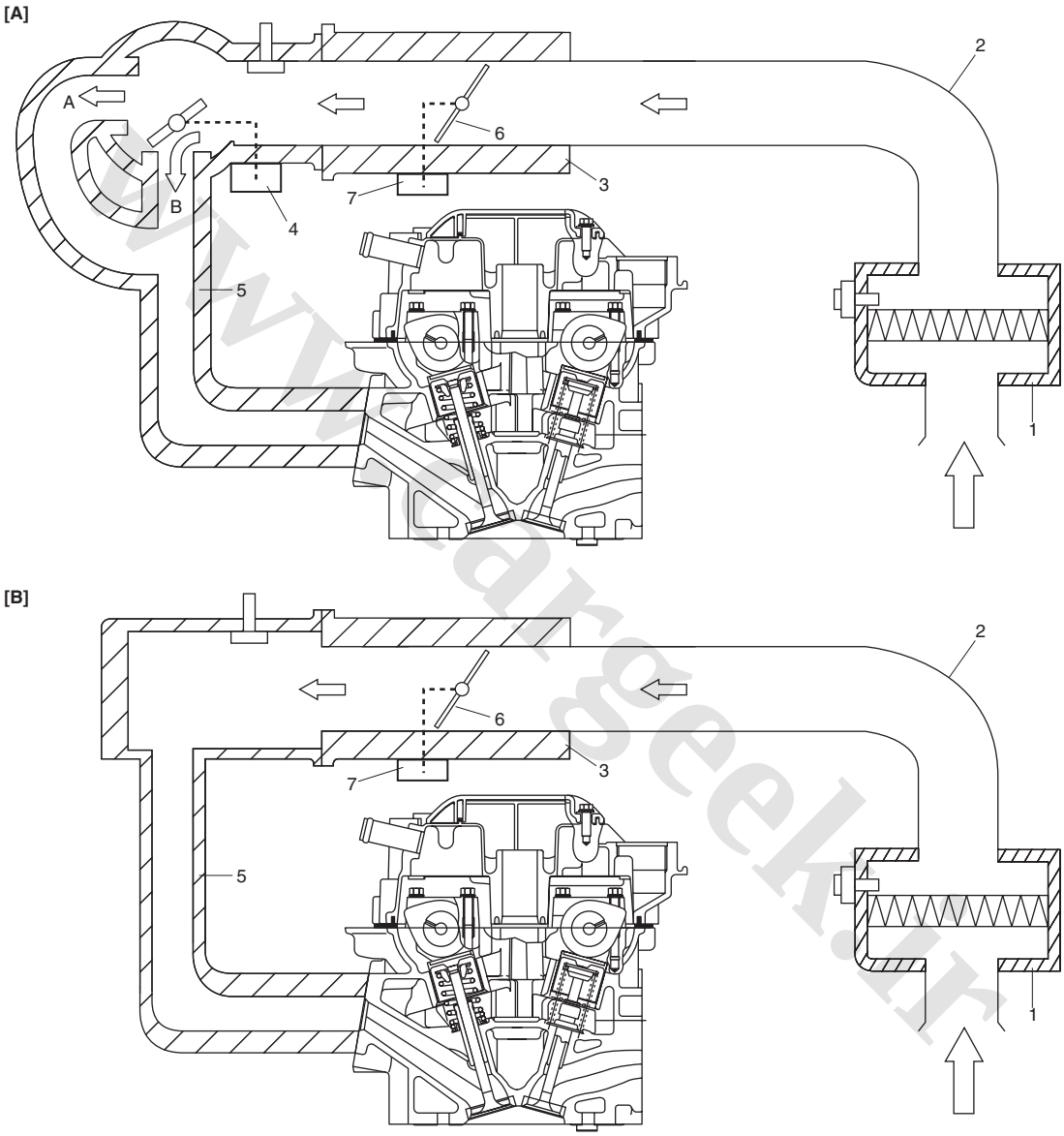


I5JB0A110008-02

| | |
|---|---|
| [A]: | For J20 engine |
| [B]: | For M16 engine |

www.cargeek.ir

www.CarGeek.ir


## Description of Electric Throttle Body System

S5JB0A1101009

The Electric Throttle Body System consists of electric throttle body assembly, accelerator pedal position (APP) sensor assembly, ECM and throttle actuator control relay.
Among them, assembly components are as follows.

- Electric throttle body assembly: throttle valve, throttle actuator, 2 throttle position sensors
- Accelerator pedal position (APP) sensor assembly: Accelerator pedal, 2 accelerator position sensors

### Operation Description

ECM (5) detects opening (depressed extent of pedal) of the accelerator pedal based on signal voltage of the accelerator pedal position (APP) sensor (1) and using that data and engine operation condition, it calculates the optimum throttle valve opening. On the other hand, it detects the throttle valve opening based on the signal voltage of the throttle position sensor (3) included in the throttle body (2) and compares it with the above calculated optimum throttle valve opening. When there is a difference between them, ECM controls the duty ratio (100% – 0%) of throttle actuator control according to this difference to drive the throttle actuator (motor) (4) included in the throttle body. When there is no difference, ECM controls the duty ratio of throttle actuator control to about 15% to maintain the throttle valve opening. In this way, the throttle valve (17) is opened and closed to achieve the optimum throttle valve opening. In this system, as the throttle position sensor and accelerator pedal position (APP) sensor have 2 sensors (main and sub) each, highly accurate and highly reliable control and abnormality detection are assured. Also, when ECM detects an abnormality in the system, it turns off the throttle actuator control relay (8) to stop controlling the throttle actuator. When the throttle actuator control relay is turned off, the throttle valve is fixed at the opening of about 7° from its completely closed position (default opening) by the force of the return spring and open spring included in the throttle body.
This throttle body is not equipped with IAC valve for idle speed control. Idle speed control is done by the throttle actuator which opens/closes the throttle valve.

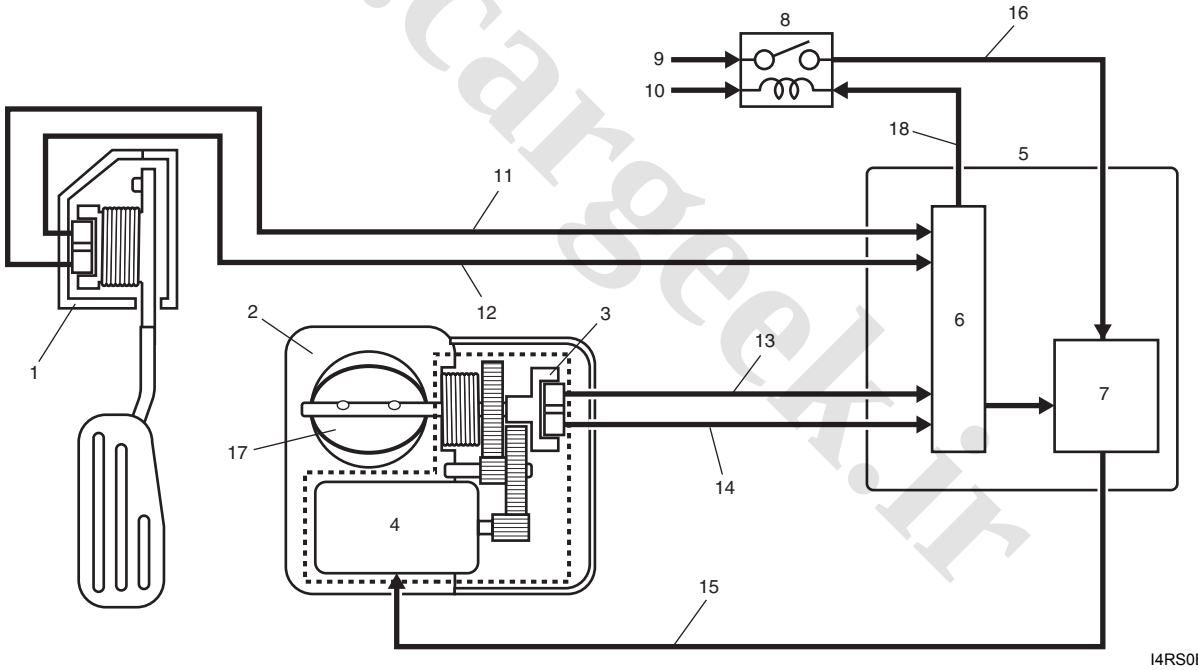


I4RS0B110007-02

| | | |
|---|---|---|
| 6. CPU | 11. Accelerator pedal position (APP) sensor (main) signal | 15. Drive signal of throttle actuator |
| 7. Drive circuit of throttle actuator | 12. Accelerator pedal position (APP) sensor (sub) signal | 16. Power supply of throttle actuator |
| 9. From “THR MOT” fuse | 13. Throttle position sensor (main) signal | 18. Control signal of throttle actuator control relay |
| 10. From main relay | 14. Throttle position sensor (sub) signal | |

www.cargeek.ir

www.CarGeek.ir

## Description of Electric Throttle Body System Calibration

S5JB0A1101010

ECM calculates controlled opening of the throttle valve on the basis of the completely closed throttle valve position of the electric throttle body system. The completely closed position data is saved in memory of ECM. However, the completely closed position of the throttle valve of the electric throttle body system (signal voltage from throttle position sensor when throttle is completely closed) differs one from the other depending on individual differences of the throttle valve and throttle position sensor. As such individual differences must be taken into account for controlling the throttle valve, it is necessary to register the completely closed throttle valve position data in ECM. When such data is registered in ECM, it is saved in RAM (memory) of ECM and used as the base data for controlling the throttle valve. This data is cleared, when any of the works described in “Precautions of Electric Throttle Body System Calibration: ” is performed.
Also, after replacement of the throttle body and/or accelerator pedal position (APP) sensor assembly, the completely closed position data in memory of ECM must be cleared once and a new one must be registered, or ECM cannot judge the complete closure position properly.
For the procedure to register such data, refer to “Electric Throttle Body System Calibration:  in Section 1C”. (After the completely closed position data is cleared, ECM, for the first time only, opens and closes the throttle valve for about 5 seconds after the ignition switch is turned ON position, for registration of the completely closed throttle valve position. If the engine is started during this registration process, such symptom as “longer cranking time” or “slow rise of revolution speed immediately after start-up” may occur. However, turning OFF the ignition switch once and restarting will set correct registration.)

## Generator Control System Description

S5JB0A1101011

Generator Control System consists of a generator (1), electric load current sensor (7) (for J20 engine) located in the fuse box No.1 (4) and ECM (5).
ECM controls generated electricity (adjusting voltage of IC regulator (2)) so that it is suitable for the engine and electric load conditions. When the electric load increases quickly, generation load of the generator increases quickly and causes idling to change. To prevent this, ECM makes generated electricity volume vary gradually to stabilize idling. Also, it reduces the engine load caused by temporary increase in electricity generation to cope with the engine condition (such as when accelerating).

### Operation

ECM controls the generated voltage of the generator using “C” terminal (generator control terminal) duty, based on following information.

- Engine condition (ECT, vehicle speed, engine speed, TP, etc.) (9)
- Battery voltage (ECM backup power voltage) (10)
- Electric load condition (blower motor, rear defogger, head lights, radiator fan, A/C, etc.) (11)
- “FR” terminal output (field coil (3) control duty) which indicates the operation rate (electricity generation condition) of the generator.

Then the generator uses “C” terminal duty to regulate the adjusting voltage of the IC regulator with the field coil control duty so as to control its generated voltage (“B” terminal output voltage).
(For more information of the generated voltage, refer to Charging System in Section 1J.)
Furthermore, with the J20 engine, the generation condition of the generator is controlled to the optimum level by the electric load current sensor (7) which detects the electrical load condition (current consumption) linearly even when a sudden electrical load variation occurs and thus the engine load is reduced.

www.cargeek.ir

www.CarGeek.ir


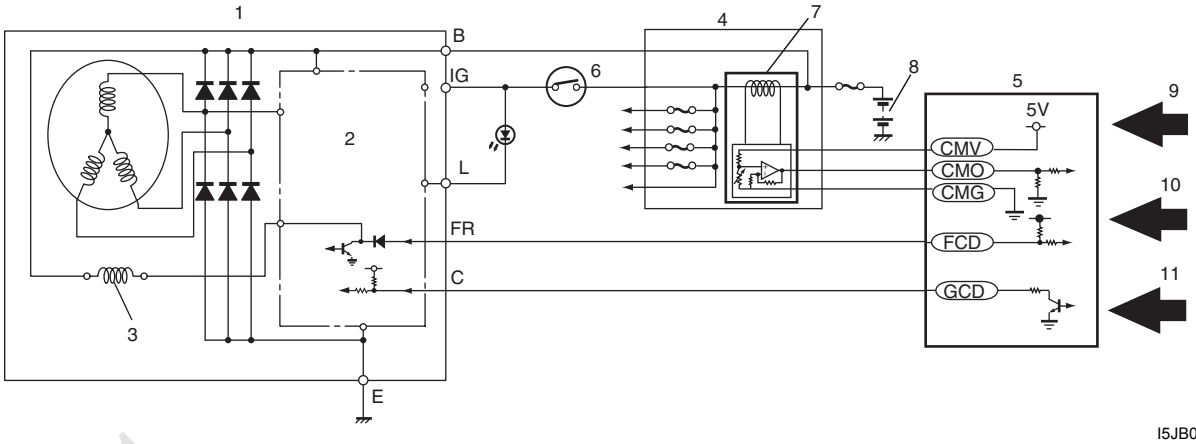


I5JB0A110009-01

| | |
|---|---|
| 6. Ignition switch | 8. Battery |

## A/F Sensor Description

S5JB0A1101012

A/F sensor (1), in place of the conventional heated Oxygen sensor-1, is installed in the center of the exhaust manifold joining section and it consists of a zirconia element (2) which causes the output current to vary according to difference in the oxygen concentration, a heater (3) which activates the element and an adjusting resistor (4) which adjusts individual difference of the sensor.
A/F sensor detects oxygen concentration in exhaust gas (9) (A/F ratio of the air-fuel mixture) linearly, ranging from LEAN to RICH.

### Operation

ECM (5) controls the sensor heater (3) and keeps the sensor element temperature at the specified level (about 750 °C) constantly so that the A/F sensor is activated in the specified way for accurate A/F detection. When the sensor element reaches the specified temperature (it is activated), its impedance drops to the specified value (approx. 30 Ω) by its characteristic.
When a certain voltage (about 0.4 V) is applied between sensor elements in this state, circuit current corresponding to the sensor element impedance flows in the sensor circuit. ECM detects this circuit current and judges whether the sensor is in the active state or not. At this time, sensor current is output linearly in the range of +0.01 mA to +some mA on the lean side and –0.01 mA to – some mA on the rich side. The variation in these ranges depends on the difference from the stoichiometry A/F ratio, that is, the amount of oxygen between the atmosphere side (6) and exhaust manifold (7).
According to this sensor output, ECM executes A/F feedback (fuel trim) to achieve the target A/F ratio.

The A/F sensor connector (8) is provided with an adjusting resistor (4) ECM detects the adjusting resistance value and corrects the sensor output current value.

www.cargeek.ir

www.CarGeek.ir

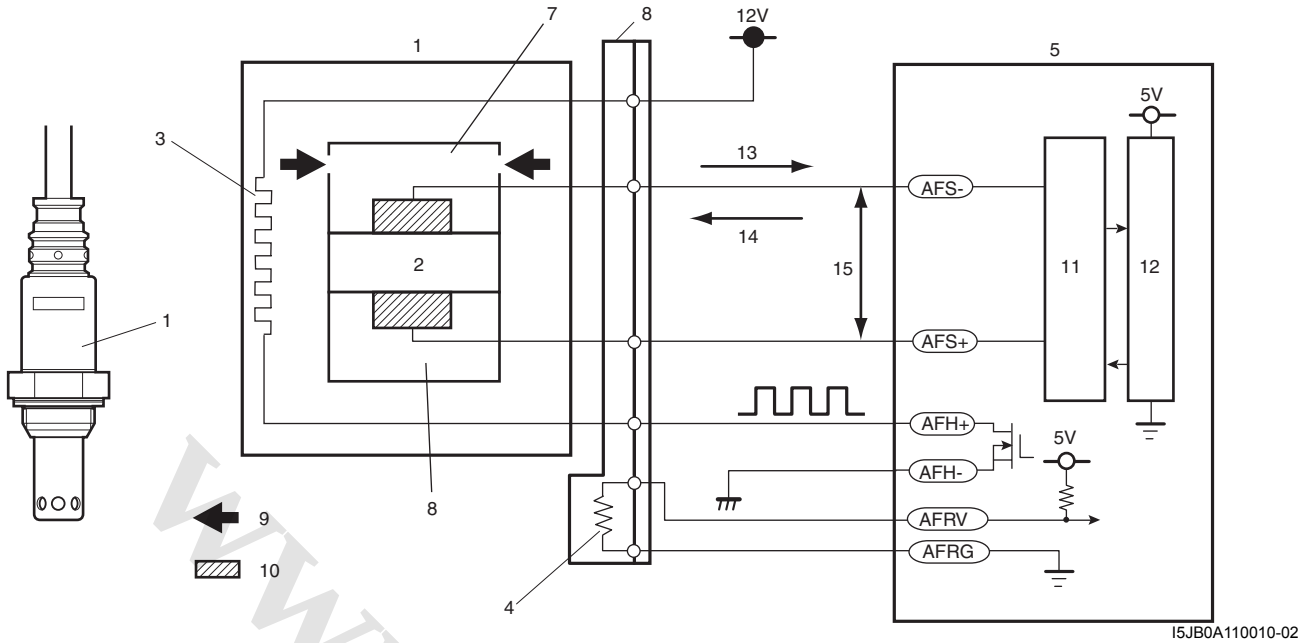


| | |
|---|---|
| 10. Electrode | 13. Lean |
| 11. A/F signal processing circuit | 14. Rich |
| 12. CPU | 15. 0.4 V |

## Electronic Control System Description

S5JB0A1101007

The electronic control system consists of 1) various sensors which detect the state of engine and driving conditions, 2) ECM which controls various devices according to the signals from the sensors and 3) various controlled devices. Functionally, it is divided into the following sub systems:

- Fuel injection control system
- Ignition control system
- Intake manifold tuning valve control system (for J20 engine)
- Electric Throttle Body Control System
- Fuel pump control system
- Radiator cooling fan control system
- Evaporative emission control system (if equipped)
- EGR system
- A/F sensor heater control system (if equipped)
- Oxygen sensor heater control system (if equipped)
- A/C control system (if equipped with A/C)
- Camshaft position control system (for M16 engine)
- Immobilizer control system (if equipped)
- Generator control system (for J20 engine)
- Controller (computer) communication system

Especially, ECM (Engine Control Module), BCM (Body electrical Control Module), combination meter, TCM (Transmission Control Module (For A/T model)), ABS hydraulic unit / control module assembly, 4WD control module (for J20 engine) and keyless start control module (if equipped) intercommunicate by means of CAN (Controller Area Network) communication.

www.cargeek.ir

www.CarGeek.ir


## Engine and Emission Control System Flow Diagram

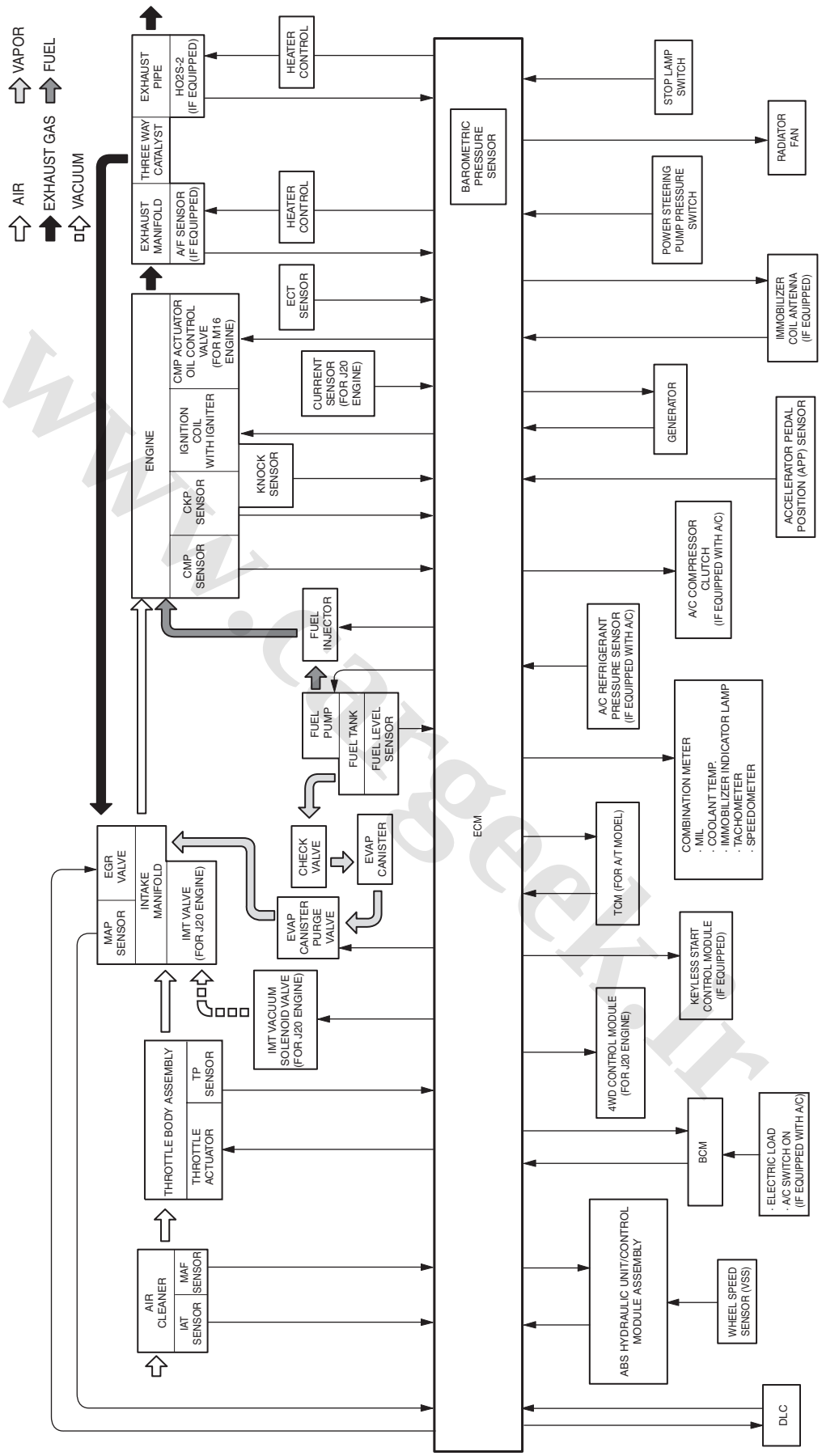


I5JB0A110011-03

www.cargeek.ir

www.CarGeek.ir

## ECM Input / Output Circuit Diagram

### For J20 engine

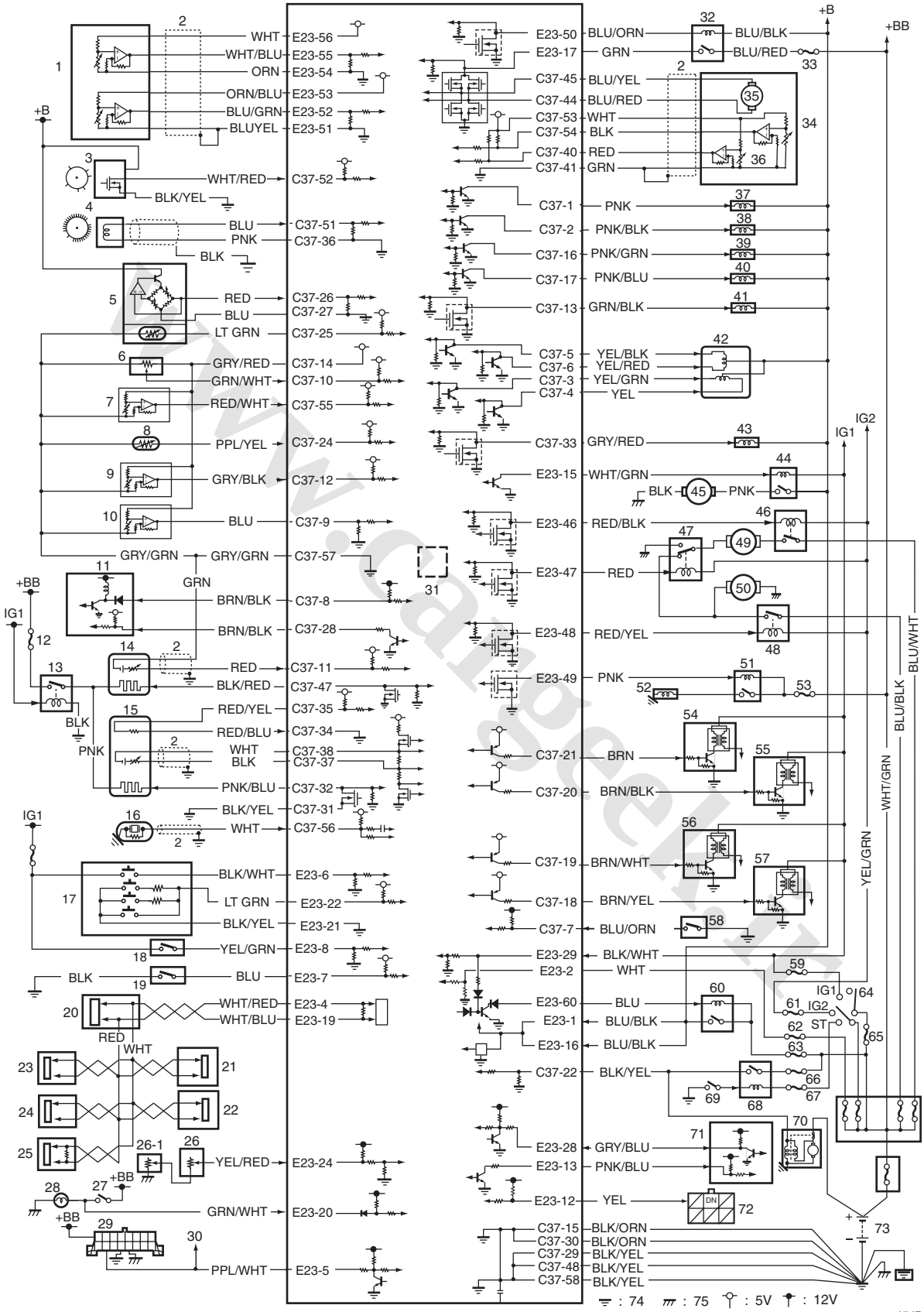


I5JB0A110012-06

www.cargeek.ir

www.CarGeek.ir


| | | |
|---|---|---|
| 1. Accelerator pedal position (APP) sensor assembly | 26-1. Sub fuel level sensor | 52. A/C compressor (if equipped with A/C) |
| 2. Shield wire | 27. Stop lamp switch | 53. “CPRSR” fuse |
| 3. CMP sensor | 28. Stop lamp | 54. Ignition coil assembly (for No.1 spark plug) |
| 4. CKP sensor | 29. DLC | 55. Ignition coil assembly (for No.2 spark plug) |
| 5. MAF and IAT sensor | 30. To TCM (for A/T model), BCM, ABS hydraulic unit / control module assembly and 4WD control module | 56. Ignition coil assembly (for No.3 spark plug) |
| 6. CO adjust resistor (if equipped) | 31. Barometric pressure sensor | 57. Ignition coil assembly (for No.4 spark plug) |
| 7. MAP sensor | 32. Throttle actuator control relay | 58. Power steering pump pressure switch |
| 8. ECT sensor | 33. “THR MOT” fuse | 59. “IG COIL” fuse |
| 9. A/C refrigerant pressure sensor (if equipped with A/C) | 34. Electric throttle body assembly | 60. Main relay |
| 10. Electric load current sensor | 35. Throttle actuator | 61. “IG2 SIG” fuse |
| 11. Generator | 36. Throttle position sensor | 62. “DOME” fuse |
| 12. “O2 HTR” fuse | 37. Fuel injector No.1 | 63. “FI” fuse |
| 13. HO2S heater relay | 38. Fuel injector No.2 | 64. Ignition switch |
| 14. HO2S-2 | 39. Fuel injector No.3 | 65. “IGN” fuse |
| 15. A/F sensor | 40. Fuel injector No.4 | 66. “STR MOT” fuse |
| 16. Knock sensor | 41. EVAP canister purge valve | 67. “ST SIG” fuse |
| 17. Cruise control switch (if equipped) | 42. EGR valve | 68. Starting motor control relay |
| 18. Brake pedal switch (for cruise control) | 43. IMT vacuum solenoid valve | 69. Transmission range switch (for A/T model) |
| 19. Clutch pedal position switch (for cruise control) | 44. Fuel pump relay | 70. Starting motor |
| 20. ABS hydraulic unit / control module assembly | 45. Fuel pump | 71. Immobilizer coil antenna (if equipped) |
| 21. BCM | 46. Radiator cooling fan relay No.1 | 72. Diagnosis connector (if equipped) |
| 22. TCM (for A/T model) | 47. Radiator cooling fan relay No.2 | 73. Battery |
| 23. Combination meter | 48. Radiator cooling fan relay No.3 | 74. Engine ground |
| 24. 4WD control module | 49. Radiator cooling fan motor No.1 | 75. Body ground |
| 25. Keyless start control module (if equipped) | 50. Radiator cooling fan motor No.2 | |
| 26. Main fuel level sensor | 51. A/C compressor relay (if equipped with A/C) | |

www.cargeek.ir

www.cargeek.ir

www.CarGeek.ir

## For M16 engine

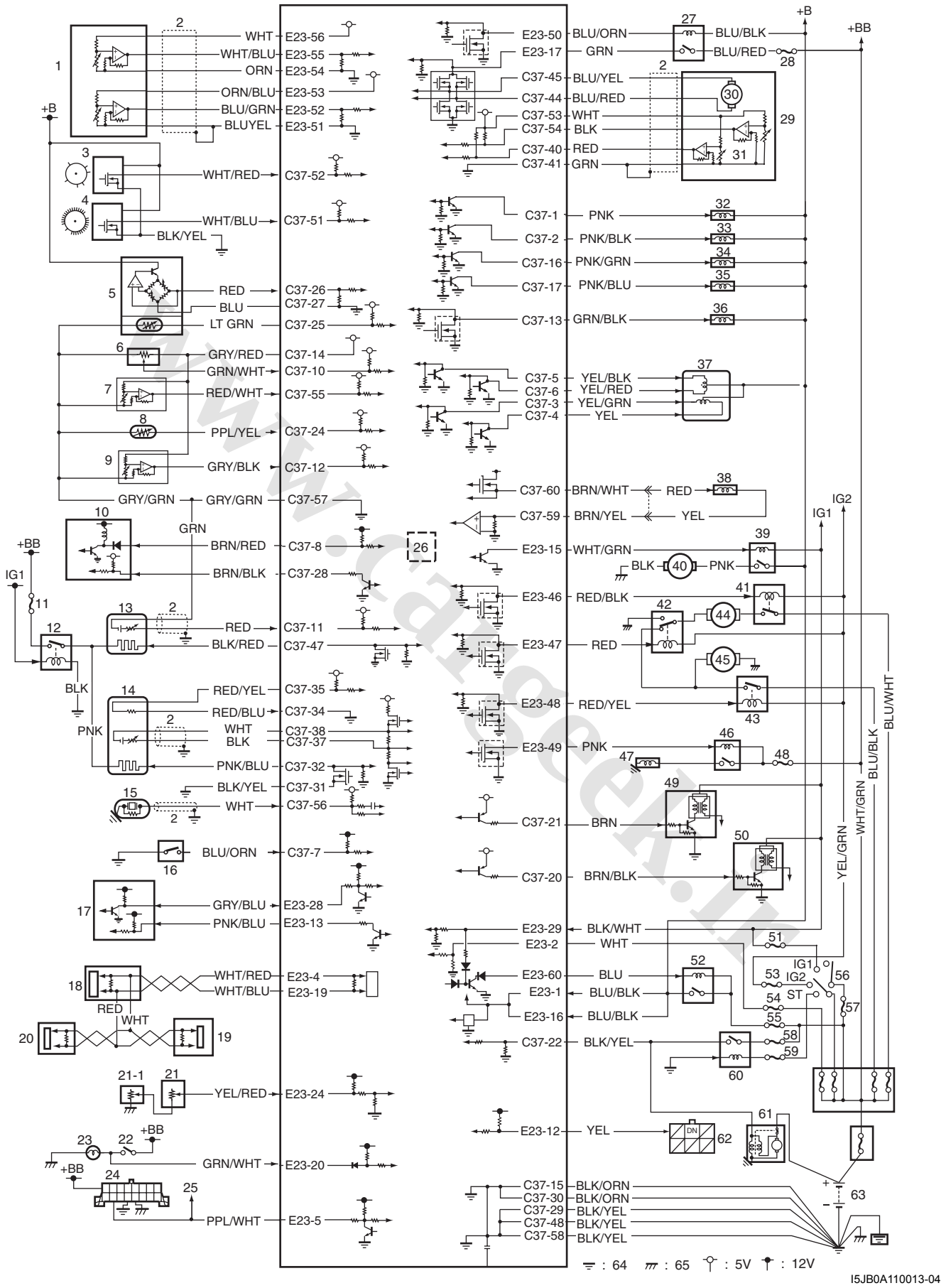


www.cargeek.ir

www.CarGeek.ir


| | | |
|---|---|---|
| 1. Accelerator pedal position (APP) sensor assembly | 22. Stop lamp switch | 44. Radiator cooling fan motor No.1 |
| 2. Shield wire | 23. Stop lamp | 45. Radiator cooling fan motor No.2 |
| 3. CMP sensor | 24. DLC | 46. A/C compressor relay (if equipped with A/C) |
| 4. CKP sensor | 25. To BCM and ABS hydraulic unit / control module assembly | 47. A/C compressor (if equipped with A/C) |
| 5. MAF and IAT sensor | 26. Barometric pressure sensor | 48. “CPRSR” fuse |
| 6. CO adjust resistor (if equipped) | 27. Throttle actuator control relay | 49. Ignition coil assembly (for No.1 and No.4 spark plugs) |
| 7. MAP sensor | 28. “THR MOT” fuse | 50. Ignition coil assembly (for No.2 and No.3 spark plugs) |
| 8. ECT sensor | 29. Electric throttle body assembly | 51. “IG COIL” fuse |
| 9. A/C refrigerant pressure sensor (if equipped with A/C) | 30. Throttle actuator | 52. Main relay |
| 10. Generator | 31. Throttle position sensor | 53. “IG2 SIG” fuse |
| 11. “O2 HTR” fuse | 32. Fuel injector No.1 | 54. “DOME” fuse |
| 12. HO2S heater relay | 33. Fuel injector No.2 | 55. “FI” fuse |
| 13. HO2S-2 | 34. Fuel injector No.3 | 56. Ignition switch |
| 14. A/F sensor | 35. Fuel injector No.4 | 57. “IGN” fuse |
| 15. Knock sensor | 36. EVAP canister purge valve | 58. “STR MOT” fuse |
| 16. Power steering pump pressure switch | 37. EGR valve | 59. “ST SIG” fuse |
| 17. Immobilizer coil antenna (if equipped) | 38. Oil control valve (Camshaft position control) | 60. Starting motor control relay |
| 18. ABS hydraulic unit / control module assembly | 39. Fuel pump relay | 61. Starting motor |
| 19. BCM | 40. Fuel pump | 62. Diagnosis connector (if equipped) |
| 20. Combination meter | 41. Radiator cooling fan relay No.1 | 63. Battery |
| 21. Main fuel level sensor | 42. Radiator cooling fan relay No.2 | 64. Engine ground |
| 21-1. Sub fuel level sensor | 43. Radiator cooling fan relay No.3 | 65. Body ground |

## Terminal Arrangement of ECM Coupler (Viewed from Harness Side)

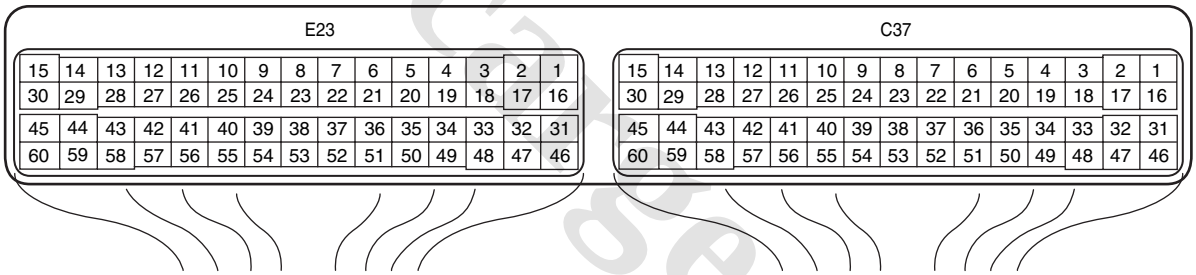


I4RS0A110008-01

## Connector: C37

| Terminal | Wire color | Circuit | Terminal | Wire color | Circuit |
|---|---|---|---|---|---|
| 1 | PNK | Fuel injector No.1 | 31 | BLK/YEL | Ground for A/F sensor heater |
| 2 | PNK/BLK | Fuel injector No.2 | 32 | PNK/BLU | Heater output of A/F sensor |
| 3 | YEL/GRN | EGR valve (stepper motor coil 3) | 33 | GRY/RED | Intake manifold tuning vacuum solenoid valve output (for J20 engine) |
| 4 | YEL | EGR valve (stepper motor coil 4) | 34 | RED/BLU | Ground for A/F sensor adjusting resistor |
| 5 | YEL/BLK | EGR valve (stepper motor coil 1) | 35 | RED/YEL | A/F sensor adjusting resistor signal |
| 6 | YEL/RED | EGR valve (stepper motor coil 2) | 36 | PNK | Crankshaft position (CKP) sensor (–) (for J20 engine) |
| 7 | BLU/ORN | Power steering pump pressure switch signal | 37 | BLK | A/F sensor signal (–) |
| 8 | BRN/RED (for M16 engine)<br>BRN/BLK (for J20 engine) | Generator field coil monitor signal | 38 | WHT | A/F sensor signal (+) |

www.cargeek.ir

www.CarGeek.ir

| Terminal | Wire color | Circuit | Terminal | Wire color | Circuit |
|---|---|---|---|---|---|
| 9 | BLU | Electric load current sensor signal (for J20 engine) | 39 | — | — |
| 10 | GRN/WHT | CO adjusting resistor signal (if equipped) | 40 | RED | Throttle position sensor (sub) signal |
| 11 | RED | Oxygen signal of heated oxygen sensor-2 | 41 | GRN | Ground for throttle position sensor |
| 12 | GRY/BLK | A/C refrigerant pressure sensor signal (if equipped with A/C) | 42 | — | — |
| 13 | GRN/BLK | EVAP canister purge valve output | 43 | — | — |
| 14 | GRY/RED | Output of 5 V power source for MAP sensor, A/C refrigerant pressure sensor, electric load current sensor (for J20 engine) and CO adjusting resistor (if equipped) | 44 | BLU/RED | Output of throttle actuator |
| 15 | BLK/ORN | Ground for ECM | 45 | BLU/YEL | Output of throttle actuator |
| 16 | PNK/GRN | Fuel injector No.3 | 46 | — | — |
| 17 | PNK/BLU | Fuel injector No.4 | 47 | BLK/RED | Heater output of heated oxygen sensor-2 |
| 18 | BRN/YEL | Ignition coil No.4 (for J20 engine) | 48 | BLK/YEL | Ground for ECM |
| 19 | BRN/WHT | Ignition coil No.3 (for J20 engine) | 49 | — | — |
| 20 | BRN/BLK | Ignition coil No.2 and No.3 (for M16 engine)<br>Ignition coil No.2 (for J20 engine) | 50 | — | — |
| 21 | BRN | Ignition coil No.1 and No.4 (for M16 engine)<br>Ignition coil No.1 (for J20 engine) | 51 | WHT/BLU<br>BLU | CKP sensor signal (for M16 engine)<br>Crankshaft position (CKP) sensor (+) (for J20 engine) |
| 22 | BLK/YEL | Starting motor signal | 52 | WHT/RED | CMP sensor signal |
| 23 | — | — | 53 | WHT | Output for 5 V power source of throttle position sensor |
| 24 | PPL/YEL | Engine coolant temp. (ECT) sensor signal | 54 | BLK | Throttle position sensor (main) signal |
| 25 | LT GRN | Intake air temp. (IAT) sensor signal | 55 | RED/WHT | Manifold absolute pressure (MAP) sensor signal |
| 26 | RED | Mass air flow (MAF) sensor signal | 56 | WHT | Knock sensor signal |
| 27 | BLU | Ground for MAF sensor | 57 | GRY/GRN | Ground for sensors |
| 28 | BRN/BLK | Generator control signal output | 58 | BLK/YEL | Ground for ECM |
| 29 | BLK/YEL | Ground for ECM | 59 | BRN/YEL | Oil control valve ground (for M16 engine) |
| 30 | BLK/ORN | Ground for ECM | 60 | BRN/WHT | Oil control valve output (for M16 engine) |

**Connector: E23**

| Terminal | Wire color | Circuit | Terminal | Wire color | Circuit |
|---|---|---|---|---|---|
| 1 | BLU/BLK | Main power supply | 31 | — | — |
| 2 | WHT | Power source for ECM internal memory | 32 | — | — |
| 3 | — | — | 33 | — | — |

www.cargeek.ir

www.CarGeek.ir


| Terminal | Wire color | Circuit | Terminal | Wire color | Circuit |
|---|---|---|---|---|---|
| 4 | WHT/RED | CAN (high) communication line (active high signal) to ABS hydraulic unit / control module assembly | 34 | — | — |
| 5 | PPL/WHT | 12 V serial communication line of data link connector | 35 | — | — |
| 6 | BLK/WHT | Cruise control main switch signal (if equipped with cruise control system) | 36 | — | — |
| 7 | BLU | Clutch pedal position switch signal (if equipped with cruise control system) | 37 | — | — |
| 8 | YEL/GRN | Brake pedal position switch (if equipped with cruise control system) | 38 | — | — |
| 9 | — | — | 39 | — | — |
| 10 | — | — | 40 | — | — |
| 11 | — | — | 41 | — | — |
| 12 | YEL | Diagnosis switch terminal (if equipped) | 42 | — | — |
| 13 | PNK/BLU | Clock signal for immobilizer coil antenna (if equipped) | 43 | — | — |
| 14 | — | — | 44 | — | — |
| 15 | WHT/GRN | Fuel pump relay output | 45 | — | — |
| 16 | BLU/BLK | Main power supply | 46 | RED/BLK | Radiator cooling fan relay No.1 output |
| 17 | GRN | Power supply of throttle actuator drive circuit | 47 | RED | Radiator cooling fan relay No.2 output |
| 18 | — | — | 48 | RED/YEL | Radiator cooling fan relay No.3 output |
| 19 | WHT/BLU | CAN (low) communication line (active low signal) to ABS hydraulic unit / control module assembly | 49 | PNK | A/C compressor relay output (if equipped with A/C) |
| 20 | GRN/WHT | Stop lamp switch signal | 50 | BLU/ORN | Throttle actuator control relay output |
| 21 | BLK/YEL | Cruise control command switch ground (if equipped with cruise control system) | 51 | BLU/YEL | Ground for accelerator pedal position (APP) sensor (sub) |
| 22 | LT GRN | Cruise control command switch signal (if equipped with cruise control system) | 52 | BLU/GRN | Accelerator pedal position (APP) sensor (sub) signal |
| 23 | — | — | 53 | ORN/BLU | Output for 5 V power source of accelerator pedal position (APP) sensor (sub) |
| 24 | YEL/RED | Fuel level sensor signal | 54 | ORN | Ground for accelerator pedal position (APP) sensor (main) |
| 25 | — | — | 55 | WHT/BLU | Accelerator pedal position (APP) sensor (main) signal |
| 26 | — | — | 56 | WHT | Output for 5 V power source of accelerator pedal position (APP) sensor (main) |
| 27 | — | — | 57 | — | — |
| 28 | GRY/BLU | Serial communication line for immobilizer coil antenna (if equipped) | 58 | — | — |
| 29 | BLK/WHT | Ignition switch signal | 59 | — | — |
| 30 | — | — | 60 | BLU | Main power supply relay output |

www.cargeek.ir

www.CarGeek.ir

## Engine and Emission Control Input / Output Table

S5JB0A1101008

| INPUT \ OUTPUT | | ELECTRIC CONTROL DEVICE | | | | | | | | | | | | | | |
|---|---|---|---|---|---|---|---|---|---|---|---|---|---|---|---|---|
| | | FUEL PUMP RELAY | FUEL INJECTOR | A/F SENSOR HEATER & HO2S HEATER | THROTTLE ACTUATOR | IGNITION COIL WITH IGNITER | EGR VALVE | EVAP CANISTER PURGE VALVE | A/C COMPRESSOR RELAY (if equipped with A/C) | RADIATOR FAN RELAY | MIL | MAIN RELAY | THROTTLE ACTUATOR CONTROL RELAY | OIL CONTROL VALVE (for M16 engine) | IMT VACUUM SOLENOID VALVE (for J20 engine) | GENERATOR CONTROL |
| SIGNAL FROM SENSOR, SWITCH AND CONTROL MODULE | FUEL LEVEL SENSOR | For detecting fuel level | | | | | | | | | | | | | | |
| | BAROMETRIC PRESSURE SENSOR | | ○ | | ○ | | | ○ | | | ○ | | | | | |
| | STOP LAMP SWITCH | | | | ○ | | | | | | | | | | | |
| | START SWITCH | ○ | ○ | | ○ | ○ | | | ○ | | | | | | | ○ |
| | IGNITION SWITCH | ○ | ○ | ○ | ○ | ○ | ○ | ○ | ○ | ○ | ○ | ○ | ○ | ○ | | |
| | A/C REFRIGERANT PRESSURE SENSOR (if equipped with A/C) | | | | ○ | | | | ○ | ○ | | | | | | |
| | BLOWER SWITCH | | | | ○ | | | | ○ | | | | | | | ○ |
| | A/C SWITCH (if equipped with A/C) | | | | ○ | | | ○ | ○ | ○ | | | | | | |
| | A/C EVAP OUTLET AIR TEMP. SENSOR (if equipped with A/C) | | | | ○ | | | | ○ | ○ | | | | | | |
| | WHEEL SPEED SENSOR | | | | ○ | | ○ | ○ | ○ | ○ | ○ | | | ○ | | |
| | A/F SENSOR | | ○ | | | | | ○ | | | ○ | | | | | |
| | HEATED OXYGEN SENSOR-2 | | ○ | | | | | | | | ○ | | | | | |
| | MAF SENSOR OF MAF AND IAT SENSOR | | ○ | ○ | ○ | ○ | ○ | ○ | | | ○ | | | ○ | | |
| | IAT SENSOR OF MAF AND IAT SENSOR | | ○ | | ○ | ○ | ○ | ○ | | | ○ | | | ○ | | |
| | ECT SENSOR | | ○ | ○ | ○ | ○ | ○ | ○ | ○ | ○ | ○ | | | ○ | ○ | |
| | POWER STEERING PRESSURE SWITCH | | | | ○ | | | | | | | | | | | |
| | TP SENSOR | | ○ | ○ | ○ | ○ | ○ | ○ | ○ | | ○ | | ○ | | ○ | |
| | ACCELERATOR PEDAL POSITION (APP) SENSOR | | | | ○ | | | | | | ○ | | ○ | | | |
| | MAP SENSOR | | | | | | | | | | ○ | | | | | |
| | CMP SENSOR | | ○ | | | ○ | | | | | ○ | | | ○ | ○ | |
| | CKP SENSOR | ○ | ○ | ○ | ○ | ○ | ○ | ○ | ○ | | ○ | | | ○ | | |
| | KNOCK SENSOR | | | | | ○ | | | | | ○ | | | | | |
| | ABS HYDRAULIC UNIT/CONTROL MODULE ASSEMBLY | | | | ○ | | | | | | | | | | | |
| | IMMOBILIZER CONTROL MODULE (in ECM) (if equipped) | ○ | ○ | | | ○ | | | | | ○ | | | | | |
| | SHIFT RANGE SWITCH (except "P" or "N" range) (for A/T model) | | | | ○ | | | | | | | | | | | |
| | ELECTRIC LOAD (headlight, rear defogger) | | | | ○ | | | | | | | | | | | ○ |
| | GENERATOR | | | | | | | | | | ○ | | | | | ○ |

I5JB0A110014-06

www.cargeek.ir

www.CarGeek.ir


# Schematic and Routing Diagram

## Engine and Emission Control System Diagram

S5JB0A1102001

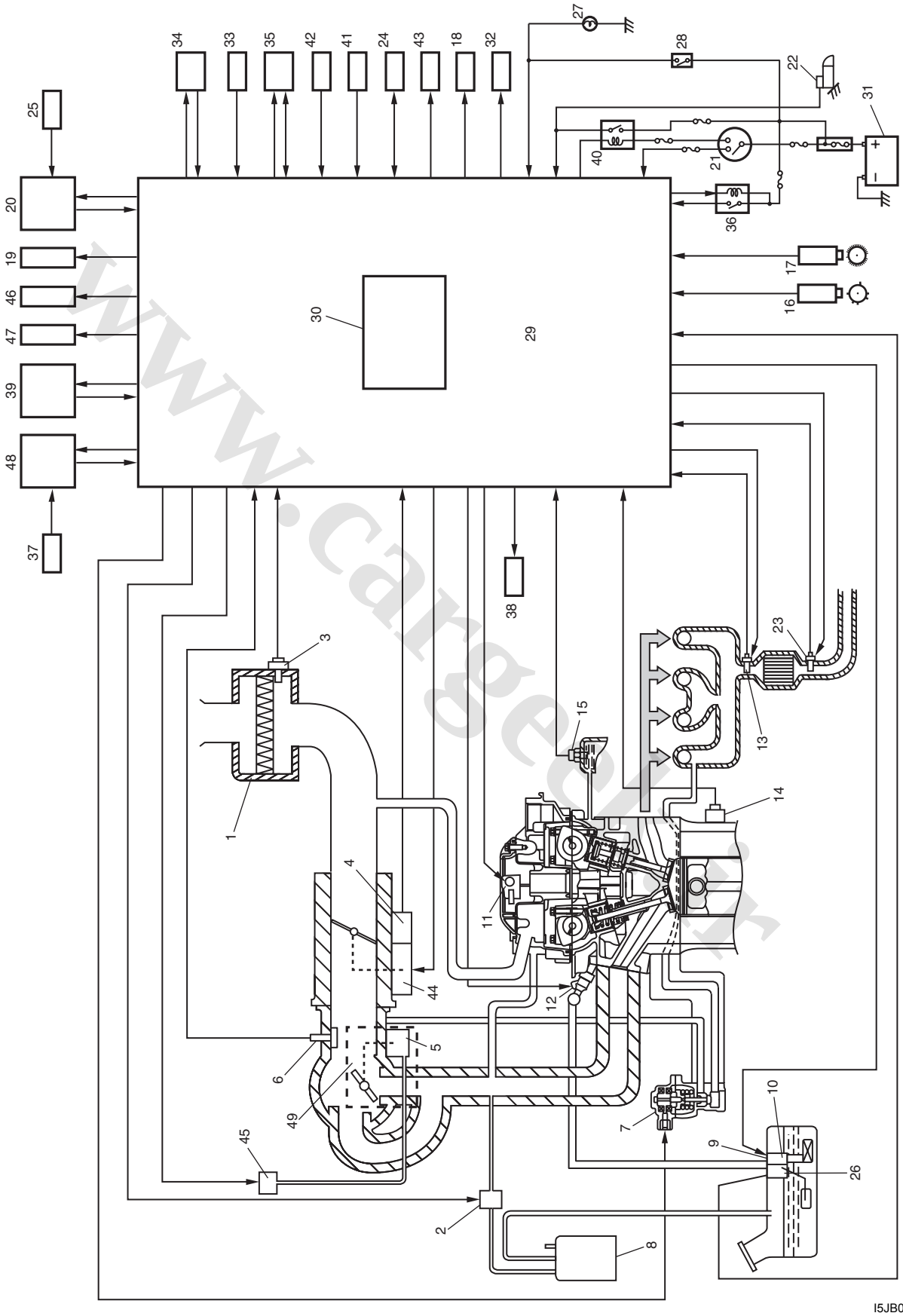


I5JB0A110015-04

www.cargeek.ir

www.CarGeek.ir

| | | |
|---|---|---|
| 1. Air cleaner | 18. Radiator cooling fan motor | 35. Immobilizer coil antenna (if equipped) |
| 2. EVAP canister purge valve | 19. Combination meter | 36. Main relay |
| 3. MAF and IAT sensor | 20. BCM | 37. Wheel speed sensor (VSS) |
| 4. TP sensor | 21. Ignition switch | 38. Oil control valve (for M16 engine) |
| 5. IMT valve (for J20 engine) | 22. Starter magnetic switch | 39. TCM (for A/T or model) |
| 6. MAP sensor | 23. Heated oxygen sensor (HO2S)-2 | 40. Starting motor control relay |
| 7. EGR valve | 24. DLC | 41. A/C refrigerant pressure sensor (if equipped with A/C) |
| 8. EVAP canister | 25. Electric load | 42. Accelerator pedal position (APP) sensor |
| 9. Tank pressure control valve (built-in fuel pump) | 26. Fuel level sensor | 43. Throttle actuator control relay |
| 10. Fuel pump | 27. Stop lamp | 44. Throttle actuator |
| 11. Ignition coil assembly | 28. Stop lamp switch | 45. IMT vacuum solenoid valve (for J20 engine) |
| 12. Fuel injector | 29. ECM | 46. Keyless start control module (if equipped) |
| 13. A/F sensor | 30. Barometric pressure sensor | 47. 4WD control module (for J20 engine) |
| 14. Knock sensor | 31. Battery | 48. ABS hydraulic unit / control module assembly |
| 15. ECT sensor | 32. A/C compressor relay (if equipped with A/C) | 49. For J20 engine |
| 16. CMP sensor | 33. Power steering pump pressure switch | |
| 17. CKP sensor | 34. Generator | |

# Component Location

## Electronic Control System Components Location

S5JB0A1103001

### For J20 Engine

**NOTE**

**The figure shows left-hand steering vehicle. For right-hand steering vehicle, parts with (*) are installed at the opposite side.**

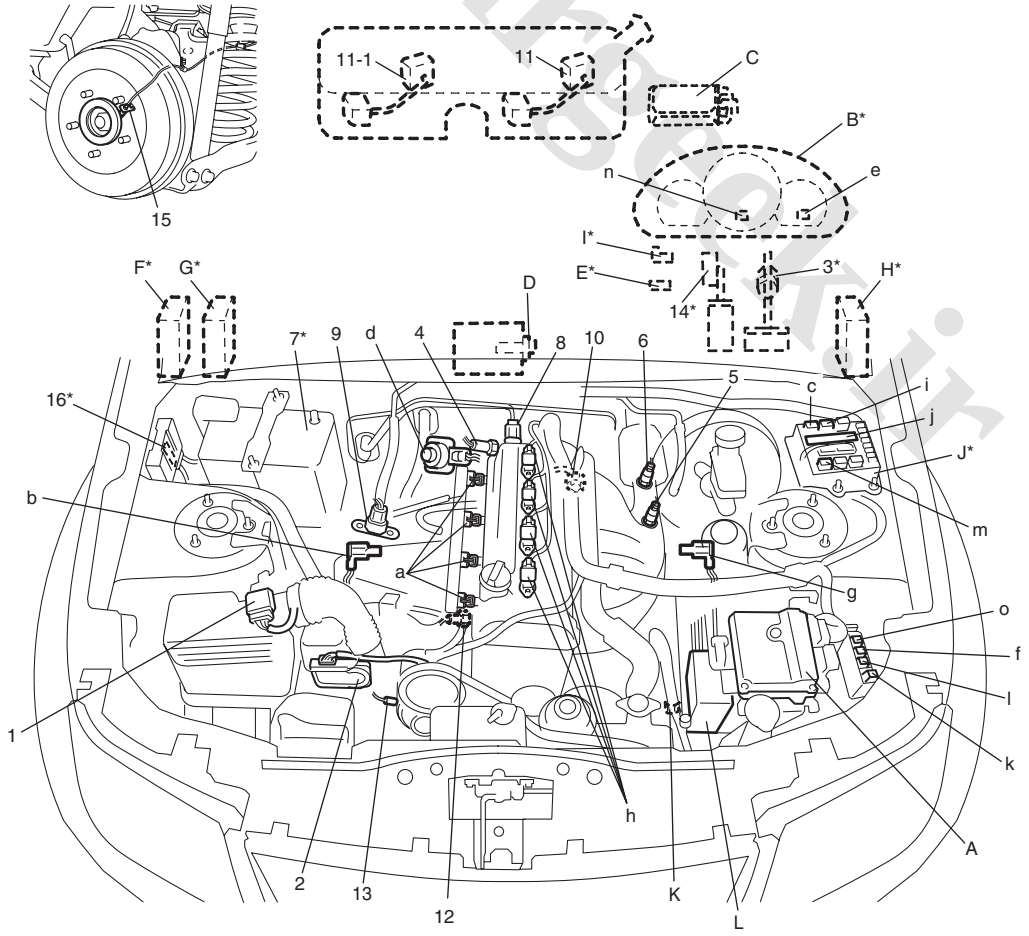


I5JB0A110016-04

www.cargeek.ir

www.CarGeek.ir


| Information sensors | Control devices | Others |
|---|---|---|
| 1. MAF and IAT sensor | a: Fuel injector | A: ECM |
| 2. Electric throttle body assembly (built-in throttle position sensor and throttle actuator) | b: EVAP canister purge valve | B: Combination meter |
| 3. Stop lamp switch | c: Fuel pump relay | C: EVAP canister |
| 4. ECT sensor | d: EGR valve | D: A/C evaporator outlet air temp. sensor (if equipped with A/C) |
| 5. A/F sensor | e: Malfunction indicator lamp | E: Data link connector |
| 6. Heated oxygen sensor-2 | f: Radiator cooling fan relay No.1 | F: 4WD control module |
| 7. Battery | g: IMT vacuum solenoid valve | G: TCM (for A/T model) |
| 8. CMP sensor | h: Ignition coil assembly (with ignitor) | H: BCM |
| 9. MAP sensor | i: Main relay | I: Immobilizer coil antenna (if equipped) |
| 10. CKP sensor | j: Integration relay No.2 (built-in HO2S heater relay, compressor relay and A/T relay) | J: Fuse box No.2 |
| 11. Main fuel level sensor | k: Radiator cooling fan relay No.2 | K: A/C refrigerant pressure sensor (if equipped with A/C) |
| 11-1. Sub fuel level sensor | l: Radiator cooling fan relay No.3 | L: ABS hydraulic unit / control module assembly |
| 12. Knock sensor | m: Starting motor control relay | |
| 13. Power steering pump pressure switch | n: Immobilizer indicator lamp (if equipped) | |
| 14. Accelerator pedal position (APP) sensor | o: Throttle actuator control relay | |
| 15. Rear wheel speed sensor (RH, LH) (VSS) | | |
| 16. Electric load current sensor | | |

## For M16 Engine

### NOTE

**The figure shows left-hand steering vehicle. For right-hand steering vehicle, parts with (*) are installed at the opposite side.**

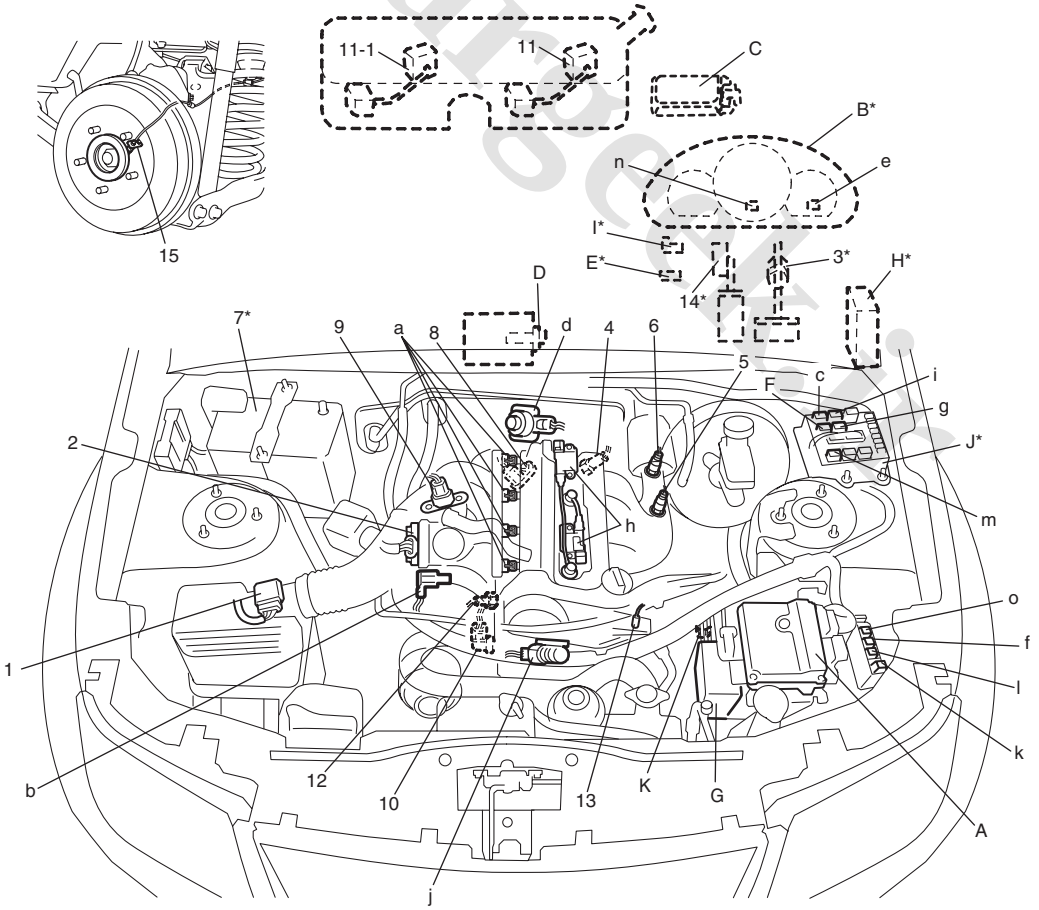


I5JB0A110017-04

www.cargeek.ir

www.CarGeek.ir

| Information sensors | Control devices | Others |
|---|---|---|
| 1. MAF and IAT sensor | a: Fuel injector | A: ECM |
| 2. Electric throttle body assembly (built-in throttle position sensor and throttle actuator) | b: EVAP canister purge valve | B: Combination meter |
| 3. Stop lamp switch | c: Fuel pump relay | C: EVAP canister |
| 4. ECT sensor | d: EGR valve | D: A/C evaporator outlet air temp. sensor (if equipped with A/C) |
| 5. A/F sensor | e: Malfunction indicator lamp | E: Data link connector |
| 6. Heated oxygen sensor-2 | f: Radiator cooling fan relay No.1 | F: A/C compressor relay (if equipped) |
| 7. Battery | g: HO2S heater relay | G: ABS hydraulic unit / control module assembly |
| 8. CMP sensor | h: Ignition coil assembly (with ignitor) | H: BCM |
| 9. MAP sensor | i: Main relay | I: Immobilizer coil antenna (if equipped) |
| 10. CKP sensor | j: Oil control valve | J: Fuse box No.2 |
| 11. Main fuel level sensor | k: Radiator cooling fan relay No.2 | K: A/C refrigerant pressure sensor (if equipped with A/C) |
| 11-1. Sub fuel level sensor | l: Radiator cooling fan relay No.3 | |
| 12. Knock sensor | m: Starting motor control relay | |
| 13. Power steering pump pressure switch | n: Immobilizer indicator lamp (if equipped) | |
| 14. Accelerator pedal position (APP) sensor | o: Throttle actuator control relay | |
| 15. Rear wheel speed sensor (RH, LH) (VSS) | | |

# Diagnostic Information and Procedures

## Engine and Emission Control System Check

S5JB0A1104001

Refer to the following items for the details of each step.

| Step | Action | Yes | No |
|---|---|---|---|
| 1 | ☞ **Customer complaint analysis**<br>1) Perform customer complaint analysis referring to “Customer Complaint Analysis”.<br>*Was customer complaint analysis performed?* | Go to Step 2. | Perform customer complaint analysis. |
| 2 | ☞ **DTC / Freeze frame data check, record and clearance**<br>1) Check for DTC (including pending DTC) referring to “DTC / Freeze Frame Data Check, Record and Clearance”.<br>*Is there any DTC(s)?* | Print DTC and freeze frame data or write them down and clear them by referring to “DTC Clearance: ”, and go to Step 3. | Go to Step 4. |
| 3 | ☞ **Visual inspection**<br>1) Perform visual inspection referring to “Visual Inspection”.<br>*Is there any faulty condition?* | Repair or replace malfunction part, and go to Step 11. | Go to Step 5. |
| 4 | ☞ **Visual inspection**<br>1) Perform visual inspection referring to “Visual Inspection”.<br>*Is there any faulty condition?* | Repair or replace malfunction part, and go to Step 11. | Go to Step 8. |
| 5 | ☞ **Trouble symptom confirmation**<br>1) Confirm trouble symptom referring to “Trouble Symptom Confirmation”.<br>*Is trouble symptom identified?* | Go to Step 6. | Go to Step 7. |
| 6 | ☞ **Rechecking and record of DTC / Freeze frame data**<br>1) Recheck for DTC and freeze frame data referring to “DTC Check: ”.<br>*Is there any DTC(s)?* | Go to Step 9. | Go to Step 8. |

www.cargeek.ir

www.CarGeek.ir


| Step | Action | Yes | No |
|---|---|---|---|
| 7 | ☞ **Rechecking and record of DTC / Freeze frame data**<br>1) Recheck for DTC and freeze frame data referring to “DTC Check: ”.<br>*Is there any DTC(s)?* | Go to Step 9. | Go to Step 10. |
| 8 | ☞ **Engine basic inspection and engine symptom diagnosis**<br>1) Check and repair according to “Engine Basic Inspection: ” and “Engine Symptom Diagnosis: ”.<br>*Are check and repair complete?* | Go to Step 11. | Check and repair malfunction part(s), and go to Step 11. |
| 9 | ☞ **Troubleshooting for DTC**<br>1) Check and repair according to applicable DTC diag. flow.<br>*Are check and repair complete?* | Go to Step 11. | Check and repair malfunction part(s), and go to Step 11. |
| 10 | ☞ **Intermittent problems check**<br>1) Check for intermittent problems referring to “Intermittent Problems Check”.<br>*Is there any faulty condition?* | Repair or replace malfunction part(s), and go to Step 11. | Go to Step 11. |
| 11 | ☞ **Final confirmation test**<br>1) Clear DTC if any.<br>2) Perform final confirmation test referring to “Final Confirmation Test”.<br>*Is there any problem symptom, DTC or abnormal condition?* | Go to Step 6. | End. |

**Step 1: Customer Complaint Analysis**
Record details of the problem (failure, complaint) and how it occurred as described by the customer. For this purpose, use of such an inspection form will facilitate collecting information to the point required for proper analysis and diagnosis.

www.cargeek.ir

www.cargeek.ir

www.CarGeek.ir

**Customer problem inspection form (Example)**

| User name: | Model: | VIN: | |
|---|---|---|---|
| Date of issue: | Date Reg. | Date of problem: | Mileage: |

| PROBLEM SYMPTOMS | |
|---|---|
| ☐ **Difficult Starting**<br>☐ No cranking<br>☐ No initial combustion<br>☐ No combustion<br>☐ Poor starting at<br>(☐cold ☐warm ☐always)<br>☐ Other_____ | ☐ **Poor Driveability**<br>☐ Hesitation on acceleration<br>☐ Back fire/☐After fire<br>☐ Lack of power<br>☐ Surging<br>☐ abnormal knocking<br>☐ Other_____ |
| ☐ **Poor Idling**<br>☐ Poor fast idle<br>☐ Abnormal idling speed<br>(☐High ☐Low) ( r/min.)<br>☐ Unstable<br>☐ Hunting ( r/min. to r/min.)<br>☐ Other_____ | ☐ **Engine Stall when**<br>☐ Immediately after start<br>☐ Accel. pedal is depressed<br>☐ Accel. pedal is released<br>☐ Load is applied<br>☐ A/C ☐Electric load ☐P/S<br>☐ Other_____<br>☐ Other_____ |
| ☐ OTHERS: | |

| VEHICLE/ENVIRONMENTAL CONDITION WHEN PROBLEM OCCURS | |
|---|---|
| **Environmental Condition** | |
| Weather | ☐Fair ☐Cloudy ☐Rain ☐Snow ☐Always ☐Other_____ |
| Temperature | ☐Hot ☐Warm ☐Cool ☐Cold ( °F/ °C) ☐Always |
| Frequency | ☐Always ☐Sometimes ( times/ day, month) ☐Only once ☐Under certain condition |
| Road | ☐Urban ☐Suburb ☐Highway ☐Mountainous (☐Uphill ☐Downhill) ☐Tarmacadam ☐Gravel<br>☐Other_____ |
| **Vehicle Condition** | |
| Engine condition | ☐Cold ☐Warming up phase ☐Warmed up ☐Always ☐Other at starting<br>☐Immediately after start ☐Racing without load ☐Engine speed ( r/min) |
| Vehicle condition | During driving: ☐Constant speed ☐Accelerating ☐Decelerating<br>☐Right hand corner ☐Left hand corner ☐When shifting (Lever position ) ☐At stop<br>☐Vehicle speed when problem occurs ( km/h, Mile/h) ☐Other |

| | | |
|---|---|---|
| Malfunction indicator lamp condition | ☐Always ON ☐Sometimes ON ☐Always OFF ☐Good condition | |
| Diagnostic trouble code | First check: | ☐No code ☐Malfunction code ( ) |
| | Second check: | ☐No code ☐Malfunction code ( ) |

I2RH01110010-01

**NOTE**

**This form is a standard sample. It should be modified according to conditions characteristic of each market.**

www.cargeek.ir

www.CarGeek.ir


**Step 2: DTC / Freeze Frame Data Check, Record and Clearance**
First, check DTC (including pending DTC), referring to "DTC Check: ". If DTC is indicated, print it and freeze frame data or write them down and then clear them by referring to "DTC Clearance: ". DTC indicates malfunction that occurred in the system but does not indicate whether it exists now or it occurred in the past and the normal condition has been restored now. To check which case applies, check the symptom in question according to Step 5 and recheck DTC according to Step 6 and 7.
Attempt to diagnose a trouble based on DTC in this step only or failure to clear the DTC in this step will lead to incorrect diagnosis, trouble diagnosis of a normal circuit or difficulty in troubleshooting.

**Step 3 and 4: Visual Inspection**
As a preliminary step, be sure to perform visual check of the items that support proper function of the engine referring to "Visual Inspection: ".

**Step 5: Trouble Symptom Confirmation**
Based on information obtained in "Step 1: Customer Complaint Analysis: " and "Step 2: DTC / Freeze Frame Data Check, Record and Clearance: ", confirm trouble symptoms. Also, reconfirm DTC according to "DTC Confirmation Procedure" described in each DTC diag. flow.

**Step 6 and 7: Rechecking and Record of DTC / Freeze Frame Data**
Refer to "DTC Check: " for checking procedure.

**Step 8: Engine Basic Inspection and Engine Symptom Diagnosis**
Perform basic engine check according to "Engine Basic Inspection: " first. When the end of the flow has been reached, check the parts of the system suspected as a possible cause referring to "Engine Symptom Diagnosis: " and based on symptoms appearing on the vehicle (symptoms obtained through steps of customer complaint analysis, trouble symptom confirmation and/or basic engine check) and repair or replace faulty parts, if any.

**Step 9: Troubleshooting for DTC (See each DTC Diag. Flow)**
Based on the DTC indicated in Step 6 or 7 and referring to the applicable DTC diag. flow, locate the cause of the trouble, namely in a sensor, switch, wire harness, connector, actuator, ECM or other part and repair or replace faulty parts.

**Step 10: Intermittent Problems Check**
Check parts where an intermittent trouble is easy to occur (e.g., wire harness, connector, etc.), referring to "Intermittent and Poor Connection Inspection: in Section 00" and related circuit of DTC recorded in Step 2.

**Step 11: Final Confirmation Test**
Confirm that the problem symptom has gone and the engine is free from any abnormal conditions. If what has been repaired is related to the DTC, clear the DTC once, perform DTC confirmation procedure and confirm that no DTC is indicated.

## Malfunction Indicator Lamp (MIL) Check

S5JB0A1104002

1) Turn ON ignition switch (with engine at stop) and check that MIL (1) lights.
   If MIL does not light up (or MIL dims) but engine can be starting, go to "Malfunction Indicator Lamp Does Not Come ON with Ignition Switch ON and Engine Stop (but Engine Can Be Started): " for troubleshooting.
   If MIL does not light with ignition switch ON and engine does not start though it is cranked up, go to "ECM Power and Ground Circuit Check: ".
2) Start engine and check that MIL turns OFF.
   If MIL remains ON and no DTC is stored in ECM, go to "Malfunction Indicator Lamp Remains ON after Engine Starts: " for troubleshooting.

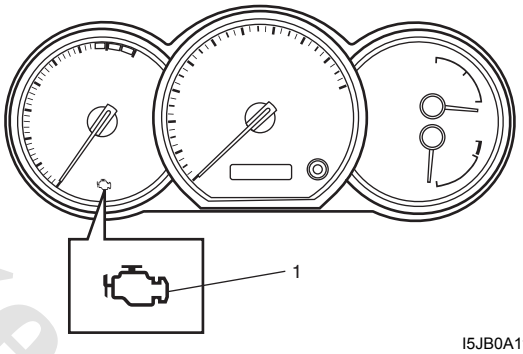


I5JB0A110018-01

## DTC Check

S5JB0A1104003

**NOTE**

**The MIL is turned on when the ECM and/or TCM detect malfunction(s). Each ECM and TCM stores diagnostic information as the diagnostic trouble code (DTC) in its memory and outputs the DTC to the scan tool. Therefore, check both of the ECM and TCM for any DTC with the scan tool because the DTC stored in ECM and TCM is not read and displayed at a time. However, each of the ECM and TCM needs not to be checked with the generic scan tool because the DTC stored in ECM and TCM is read and displayed at a time.**

www.cargeek.ir

www.CarGeek.ir

### Using Scan Tool

1) Prepare SUZUKI scan tool or OBD generic scan tool (vehicle not equipped with diagnosis connector).
2) With ignition switch turned OFF, connect it to data link connector (DLC) (1) located on underside of instrument panel at driver's seat side.

   **Special tool**
   **(A): SUZUKI scan tool**

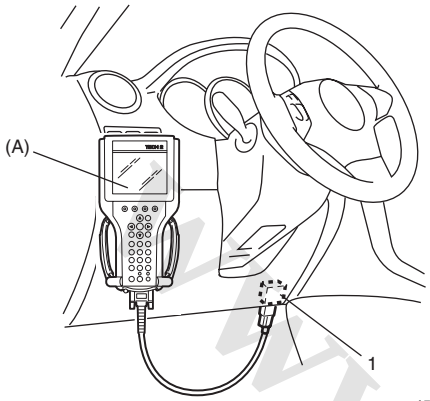


I5JB0A110019-01

3) Turn ignition switch ON and confirm that MIL lights.
4) Read DTC, pending DTC and freeze frame data according to instructions displayed on scan tool and print them or write them down. Refer to scan tool operator's manual for further details.
   If communication between scan tool and ECM is not possible, check if scan tool is communicable by connecting it to ECM in another vehicle. If communication is possible in this case, scan tool is in good condition. Then check data link connector and serial data line (circuit) in the vehicle with which communication was not possible. If connector and circuit are OK, check that power supply and ground circuits of ECM and DLC are in good condition referring to "ECM Power and Ground Circuit Check: ".
5) After completing the check, turn ignition switch OFF and disconnect scan tool from data link connector.

### Without Using Scan Tool (Vehicle Equipped with Diagnosis Connector)

1) Turn ignition switch to OFF position.
2) Using service wire, ground diagnosis switch terminal (1) of diagnosis connector (2).
3) Turn ON ignition switch and check DTC displayed on odometer (3) of combination meter.
   When more than 2 DTCs are stored in memory, blinking for each DTC starts with the smallest DTC number in increasing order. Also, DTC is indicated repeatedly until the ignition switch is turned OFF or disconnect service wire.

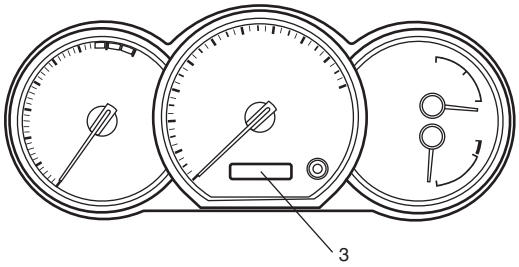


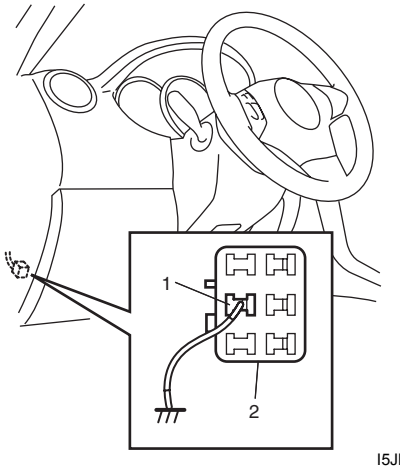


I5JB0A110020-01

**NOTE**

**When no DTC is detected, display on odometer of combination meter is "0000".**

4) After completing the check, turn ignition switch to OFF position and disconnect service wire from diagnosis connector.

## DTC Clearance

S5JB0A1104004

### Using Scan Tool

1) Connect OBD generic scan tool or SUZUKI scan tool to data link connector in the same manner as when making this connection for DTC check.
2) Turn ignition switch OFF and then ON.
3) Erase DTC and pending DTC according to instructions displayed on scan tool. Refer to scan tool operator's manual for further details.
4) After completing the clearance, turn ignition switch OFF and disconnect scan tool from data link connector.

www.cargeek.ir

www.CarGeek.ir


**NOTE**

**DTC and freeze frame data stored in ECM memory are also cleared in the following cases. Be careful not to clear them before keeping their record.**

- **When power to ECM is cut off (by disconnecting battery cable, removing fuse or disconnecting ECM connectors).**
- **When the same malfunction (DTC) is not detected again during 40 engine warm-up cycles. (See "Warm-Up Cycle" of "On-Board Diagnostic System Description: ".)**

**Without Using Scan Tool**

1) Turn ignition switch to OFF position.
2) Disconnect battery negative cable for specified time below to erase diagnostic trouble code stored in ECM memory and reconnect it.

**Time required to erase DTC**

| Ambient temperature | Time to cut power to ECM |
|---|---|
| Over 0 °C (32 °F) | 30 sec. or longer |
| Under 0 °C (32 °F) | Not specifiable. Select a place with higher than 0 °C (32 °F) temperature. |

## DTC Table

S5JB0A1104005

**NOTE**

- **For the vehicle equipped with diagnosis connector, some of DTC No. with delta (△) mark in the following table can not be detected by ECM depending on vehicle specification and local regulation.**
- **With the generic scan tool, only star (*) marked DTC No. in the following table can be read.**
- **1 driving cycle: MIL lights up when DTC is detected during 1 driving cycle.**
- **2 driving cycles: MIL lights up when the same DTC is detected also in the next driving cycle after DTC is detected and stored temporarily in the first driving cycle.**
- ***2 driving cycles:**
  **MIL blinks or lights up. Refer to "DTC P0300 / P0301 / P0302 / P0303 / P0304: Random Misfire Detected / Cylinder 1 / Cylinder 2 / Cylinder 3 / Cylinder 4 Misfire Detected: " for details.**

| DTC No. | Detecting item | Detecting condition (DTC will set when detecting:) | MIL |
|---|---|---|---|
| ☞ *P0010 | Camshaft position actuator circuit (for M16 engine) | Oil control valve circuit open or short. | 1 driving cycle |
| ☞ *P0011 | Camshaft position – timing over-advanced or system performance (for M16 engine) | Actual value of advanced valve timing does not reach target value, or valve timing is advanced although ECM command is most retarding. | 2 driving cycles |
| ☞ *P0012 | Camshaft position – timing over-retarded (for M16 engine) | | 2 driving cycles |
| ☞ △*P0030 | HO2S heater control circuit (Sensor-1) | Impedance of A/F sensor element is higher than or lower than specified range for more than 200 sec. even though A/F sensor heater is turned ON for more than specified time. | 2 driving cycles |
| ☞ △*P0031 | HO2S heater control circuit low (Sensor-1) | A/F sensor circuit voltage is lower than specification for more than specified time continuously even though control duty ratio of A/F sensor heater is less than specification. | 2 driving cycles |
| ☞ △*P0032 | HO2S heater control circuit high (Sensor-1) | A/F sensor circuit voltage is higher than specification for more than specified time continuously even though control duty ratio of A/F sensor heater is more than specification. | 2 driving cycles |
| ☞ △*P0037 | HO2S heater control circuit low (Sensor-2) | HO2S-2 circuit voltage is lower than specification for more than specified time continuously even though control duty ratio of HO2S-2 heater is less than specification. | 2 driving cycles |
| ☞ △*P0038 | HO2S heater control circuit high (Sensor-2) | HO2S-2 circuit voltage is higher than specification for more than specified time continuously even though control duty ratio of HO2S-2 heater is more than specification. | 2 driving cycles |
| ☞ △*P0101 | Mass air flow circuit range/ performance | MAF sensor volume is more than specification or less than specification. | 2 driving cycles |

www.cargeek.ir

www.CarGeek.ir

| DTC No. | Detecting item | Detecting condition (DTC will set when detecting:) | MIL |
|---|---|---|---|
| ☞ *P0102 | Mass air flow circuit low input | Output voltage of MAF sensor is less than specification. | 1 driving cycle |
| ☞ *P0103 | Mass air flow circuit high input | Output voltage of MAF sensor is more than specification. | 1 driving cycle |
| ☞ △*P0106 | Manifold absolute pressure circuit range/performance | Difference between Max. manifold absolute pressure value and Min. manifold pressure value is less than specification or difference between barometric pressure value and manifold pressure value is less than specification | 2 driving cycles |
| ☞ *P0107 | Manifold absolute pressure circuit low input | Output voltage of MAP sensor is less than specification. | 1 driving cycle |
| ☞ *P0108 | Manifold absolute pressure circuit high input | Output voltage of MAP sensor is more than specification. | 1 driving cycle |
| ☞ △*P0111 | Intake air temperature sensor circuit range/performance | Variation of intake air temperature from engine start is less than specification. | 2 driving cycles |
| ☞ *P0112 | Intake air temperature sensor circuit low | Circuit voltage of IAT sensor is less than specification. | 1 driving cycle |
| ☞ *P0113 | Intake air temperature sensor circuit high | Circuit voltage of IAT sensor is more than specification. | 1 driving cycle |
| ☞ △*P0116 | Engine coolant temperature circuit range/performance | Engine coolant temperature is less than specified temperature for specified time from engine start. | 2 driving cycles |
| ☞ *P0117 | Engine coolant temperature circuit low | Circuit voltage of ECT sensor is less than specification. | 1 driving cycle |
| ☞ *P0118 | Engine coolant temperature circuit high | Circuit voltage of ECT sensor is more than specification. | 1 driving cycle |
| ☞ *P0122 | Throttle position sensor (main) circuit low | Output voltage of throttle position sensor (main) is lower than specification. | 1 driving cycle |
| ☞ *P0123 | Throttle position sensor (main) circuit high | Output voltage of throttle position sensor (main) is higher than specification. | 1 driving cycle |
| ☞ △*P0131 | O2 sensor (HO2S) circuit low voltage (Sensor-1) | Output voltage or sensor current of A/F sensor is less than specification. | 2 driving cycles |
| ☞ △*P0132 | O2 sensor (HO2S) circuit high voltage (Sensor-1) | Output voltage or sensor current of A/F sensor is more than specification. | 2 driving cycles |
| ☞ △*P0133 | O2 sensor (HO2S) circuit slow response (Sensor-1) | Ratio between integrated value of A/F sensor output variation and integrated value of short term fuel trim variation is more than specification. | 2 driving cycles |
| ☞ △*P0134 | O2 sensor (HO2S) circuit no activity detected (Sensor-1) | Impedance of A/F sensor element is higher than specification for more than 160 sec. even though A/F sensor heater is turned ON for more than specified time. | 2 driving cycles |
| ☞ △*P0137 | O2 sensor (HO2S) circuit low voltage (Sensor-2) | HO2S-2 voltage is lower than 0.4 V for more than specified time continuously while vehicle is driving with high engine load (high speed). And HO2S-2 max. voltage minus HO2S-2 min. voltage is less than 0.2 V for specified time continuously. | 2 driving cycles |
| ☞ △*P0138 | O2 sensor (HO2S) circuit high voltage (Sensor-2) | HO2S-2 voltage is higher than 0.85 V for more than specified time continuously while vehicle is driving with high engine load (high speed). And HO2S-2 max. voltage minus HO2S-2 min. voltage is less than 0.2 V for specified time continuously. | 2 driving cycles |
| ☞ △*P0140 | O2 sensor (HO2S) circuit no activity detected (Sensor-2) | Output voltage of HO2S-2 is more than specification after warming up engine. | 2 driving cycles |
| ☞ △*P0171 | System too lean | Total fuel trim is larger than specification for specified time or longer. (Fuel trim toward rich side is large.) | 2 driving cycles |
| ☞ △*P0172 | System too rich | Total fuel trim is smaller than specification for specified time or longer. (Fuel trim toward lean side is large.) | 2 driving cycles |
| ☞ *P0222 | Throttle position sensor (sub) circuit low | Output voltage of throttle position sensor (sub) is lower than specification. | 1 driving cycle |

www.cargeek.ir

www.CarGeek.ir


| DTC No. | Detecting item | Detecting condition (DTC will set when detecting:) | MIL |
|---|---|---|---|
| ☞ *P0223 | Throttle position sensor (sub) circuit high | Output voltage of throttle position sensor (sub) is higher than specification. | 1 driving cycle |
| ☞ △*P0300 | Random misfire detected | Misfire of such level as to cause damage to three way catalyst. | *2 driving cycles |
| ☞ △*P0301/ △*P0302/ △*P0303/ △*P0304 | Cylinder 1 misfire detected<br>Cylinder 2 misfire detected<br>Cylinder 3 misfire detected<br>Cylinder 4 misfire detected | Misfire of such level as to deteriorate emission but not to cause damage to three way catalyst. | 2 driving cycles |
| ☞ *P0327 | Knock sensor circuit low | Output voltage of knock sensor is less than specification. | 1 driving cycle |
| ☞ *P0328 | Knock sensor circuit high | Output voltage of knock sensor is more than specification. | 1 driving cycle |
| ☞ *P0335 | Crankshaft position sensor circuit | No signal of CKP sensor for specified time even if starting motor signal is input. | 1 driving cycle |
| ☞ *P0340 | Camshaft position sensor circuit | CMP sensor pulse is out of specification. | 1 driving cycle |
| ☞ △*P0401 | Exhaust gas recirculation flow detected as insufficient | Difference in intake manifold absolute pressure between opened EGR valve and closed EGR valve is less than specification. | 2 driving cycles |
| ☞ △*P0402 | Exhaust gas recirculation flow detected as excessive | Difference in intake manifold absolute pressure between opened EGR valve and closed EGR valve is more than specification. | 2 driving cycles |
| ☞ *P0403 | Exhaust gas recirculation control circuit | Output voltage is different from output command with more than one pole out of 4 poles. | 1 driving cycle |
| ☞ △*P0420 | Catalyst system efficiency below threshold | Ratio between integrated value of A/F sensor output variation and integrated value of HO2S-2 output variation is more than specification. | 2 driving cycles |
| ☞ *P0443 | Evaporative emission system purge control valve circuit | Monitor signal of EVAP canister purge valve is different from command signal. (circuit open or shorted to ground) | 2 driving cycles |
| ☞ P0462 | Fuel level sensor circuit low | Circuit voltage of fuel level sensor is less than specification. | — |
| ☞ P0463 | Fuel level sensor circuit high | Circuit voltage of fuel level sensor is more than specification. | — |
| ☞ *P0480 | Fan 1 (Radiator cooling fan) control circuit | Monitor signal of radiator cooling fan relay is different from command signal. | 1 driving cycle |
| ☞ *P0500 | Vehicle speed sensor (VSS) malfunction | No vehicle speed signal during fuel cut for specified time or longer, or vehicle speed signal is not input even if vehicle is driving with more than specified engine speed and D-range (for A/T model). | 2 driving cycles |
| ☞ △*P0504 | Brake switch “A”/“B” correlation | Brake pedal switch signal (Brake switch 2) is inconsistent with stop lamp switch signal (Brake switch 1). | — |
| ☞ P0532 | A/C refrigerant pressure sensor circuit low | Output voltage of A/C refrigerant pressure sensor is less than specification. | — |
| ☞ P0533 | A/C refrigerant pressure sensor circuit high | Output voltage of A/C refrigerant pressure sensor is more than specification. | — |
| ☞ *P0601 | Internal control module memory check sum error | Data write error or check sum error. | 1 driving cycle |
| ☞ P0602 | Control module programming error | Data programming error. | 1 driving cycle |
| ☞ *P0607 | Control module performance | Data programming error. | 1 driving cycle |
| ☞ △*P0616 | Starter relay circuit low | Starter signal is low voltage even though engine is started with vehicle at stop. | 2 driving cycles |
| ☞ △*P0617 | Starter relay circuit high | Starter signal is high voltage for specified time while engine is running. | 2 driving cycles |

www.cargeek.ir

www.CarGeek.ir

| DTC No. | Detecting item | Detecting condition (DTC will set when detecting:) | MIL |
|---|---|---|---|
| ☞ P0620 | Generator control circuit | Battery voltage is higher than specification even through generator control is maximum regulation, or battery voltage is lower than specification even through generator control is minimum regulation and electric load is less than 20 A. | — |
| ☞ P0625 | Generator field terminal circuit low | Generator field coil duty is 100% (low voltage) for more than specified time even through generator control is maximum regulation, or generator field coil duty is 100% (low voltage) when engine is starting. | — |
| ☞ P0626 | Generator field terminal circuit high | Generator field coil duty is 0% (high voltage) for more than specified time even through generator control is minimum regulation | — |
| ☞ P0660 | Intake manifold tuning valve circuit / open (for J20 engine) | Monitor signal of intake manifold tuning vacuum solenoid valve is different from command signal. (circuit open or shorted to ground) | — |
| ☞ P1501 | Electric load current sensor circuit low (for J20 engine) | Electric load current sensor circuit voltage is lower than specified range. | — |
| ☞ P1502 | Electric load current sensor circuit high (for J20 engine) | Electric load current sensor circuit voltage is higher than specified range. | — |
| ☞ *P1510 | ECM backup power supply malfunction | Backup power voltage is no input after starting engine. | 1 driving cycle |
| ☞ P1603 | TCM trouble code detected (for J20 engine) | When ECM receives a trouble code from TCM, which indicates that some problem occurred in sensor circuits and its calculated values used for operations such as idle speed control, engine power control and so on by TCM, this DTC is detected by ECM. | 1 driving cycle |
| ☞ P1674 | CAN communication (bus off error) | Transmission error that is inconsistent between transmission data and transmission monitor (CAN bus monitor) data is detected more than 7 times continuously. | — |
| ☞ *P1676 | CAN communication (reception error for TCM) | Reception error of communication data for TCM is detected for longer than specified time continuously. | 1 driving cycle |
| ☞ P1678 | CAN communication (reception error for BCM) | Reception error of communication data for BCM is detected for longer than specified time continuously. | — |
| ☞ *P1685 | CAN communication (reception error for ABS control module) | Reception error of communication data for ABS hydraulic unit / control module assembly is detected for longer than specified time continuously. | 1 driving cycle |
| ☞ *P2101 | Throttle actuator control motor circuit range/performance | Monitor signal of throttle actuator output (duty output) is inconsistent with throttle actuator control command. | 1 driving cycle |
| ☞ *P2102 | Throttle actuator control motor circuit low | Power supply voltage of throttle actuator control circuit is lower than specification even if throttle actuator control relay turned on. | 1 driving cycle |
| ☞ *P2103 | Throttle actuator control motor circuit high | Power supply voltage of throttle actuator control circuit is higher than specification even if throttle actuator control relay turned off. | 1 driving cycle |
| ☞ *P2111 | Throttle actuator control system – stuck open | Throttle valve default opening is greater than 7° from complementary closed position when diagnosing throttle valve at ignition switch turned OFF. | 1 driving cycle |
| ☞ *P2119 | Throttle actuator control throttle body range/performance | Difference between actual throttle valve opening angle and opening angle calculated by ECM is more than specification. | 1 driving cycle |
| ☞ *P2122 | Pedal position sensor (main) circuit low input | Output voltage of pedal position sensor (main) is lower than specification. | 1 driving cycle |
| ☞ *P2123 | Pedal position sensor (main) circuit high input | Output voltage of pedal position sensor (main) is higher than specification. | 1 driving cycle |
| ☞ *P2127 | Pedal position sensor (sub) circuit low input | Output voltage of pedal position sensor (sub) is lower than specification. | 1 driving cycle |
| ☞ *P2128 | Pedal position sensor (sub) circuit high input | Output voltage of pedal position sensor (sub) is higher than specification. | 1 driving cycle |

www.cargeek.ir

www.CarGeek.ir


| DTC No. | Detecting item | Detecting condition (DTC will set when detecting:) | MIL |
|---|---|---|---|
| ☞ *P2135 | Throttle position sensor (main / sub) voltage correlation | Difference between the opening angle based on throttle position sensor (main) and the opening angle based on throttle position sensor (sub) is more than specification. | 1 driving cycle |
| ☞ *P2138 | Pedal position sensor (main / sub) voltage correlation | Difference between the opening angle based on accelerator pedal position sensor (main) and the opening angle based on accelerator pedal position sensor (sub) is more than specification. | 1 driving cycle |
| ☞ △*P2195 | O2 sensor signal stuck lean (Sensor-1) | A/F sensor output is lower than specification. | 2 driving cycles |
| ☞ △*P2196 | O2 sensor signal stuck rich (Sensor-1) | A/F sensor output is higher than specification. | 2 driving cycles |
| ☞ *P2227 | Barometric pressure circuit range/performance | Difference of barometric pressure value and intake manifold pressure value is more than specification at engine start. | 2 driving cycles |
| ☞ △*P2228 | Barometric pressure circuit low | Barometric pressure sensor voltage is less than specification. | 1 driving cycle |
| ☞ *P2229 | Barometric pressure circuit high | Barometric pressure sensor voltage is more than specification. | 1 driving cycle |
| △P1614 | Transponder response error | Refer to “Diagnostic Trouble Code (DTC) Table: in Section 10C”. | — |
| △P1615 | ID code does not registered (vehicle equipped with keyless start system only) | Refer to “Diagnostic Trouble Code (DTC) Table: in Section 10C”. | — |
| △P1616 | Different registration ID codes (vehicle equipped with keyless start system only) | Refer to “Diagnostic Trouble Code (DTC) Table: in Section 10C”. | — |
| △P1618 | CAN communication error (reception error for keyless start control module) (vehicle equipped with keyless start system only) | Refer to “Diagnostic Trouble Code (DTC) Table: in Section 10C”. | — |
| △P1621 | Immobilizer communication line error | Refer to “Diagnostic Trouble Code (DTC) Table: in Section 10C”. | — |
| △P1622 | EEPROM error | Refer to “Diagnostic Trouble Code (DTC) Table: in Section 10C”. | — |
| △P1623 | Unregistered transponder | Refer to “Diagnostic Trouble Code (DTC) Table: in Section 10C”. | — |
| △P1625 | Immobilizer antenna error | Refer to “Diagnostic Trouble Code (DTC) Table: in Section 10C”. | — |
| P1636 | Immobilizer information registration failure | Refer to “Diagnostic Trouble Code (DTC) Table: in Section 10C”. | — |
| P1638 | Immobilizer information mismatched | Refer to “Diagnostic Trouble Code (DTC) Table: in Section 10C”. | — |

www.cargeek.ir

www.CarGeek.ir

**For Vehicle Equipped with A/T**

When using OBD generic scan tool, not only the previous star (*) marked ECM DTC(s) but also the following DTC(s) is displayed on OBD generic scan tool simultaneously.

| DTC No. | Detecting item | Detecting condition (DTC will set when detecting) |
|---|---|---|
| *P0705 | Transmission range sensor circuit malfunction (PRNDL input) | Refer to “DTC Table:  in Section 5A”. |
| *P0707 | Transmission range sensor circuit low | |
| *P0712 | Transmission fluid temperature sensor circuit low | |
| *P0713 | Transmission fluid temperature sensor circuit high | |
| *P0717 | Input / Turbine speed sensor circuit no signal | |
| *P0722 | Output speed sensor circuit no signal | |
| *P0741 | Torque converter clutch circuit performance or stuck off | |
| *P0742 | Torque converter clutch circuit stuck on | |
| *P0751 | Shift solenoid-A (No.1) performance or stuck off | |
| *P0752 | Shift solenoid-A (No.1) stuck on | |
| *P0756 | Shift solenoid-B (No.2) performance or stuck off | |
| *P0757 | Shift solenoid-B (No.2) stuck on | |
| *P0962 | Pressure control solenoid control circuit low | |
| *P0963 | Pressure control solenoid control circuit high | |
| *P0973 | Shift solenoid-A (No.1) control circuit low | |
| *P0974 | Shift solenoid-A (No.1) control circuit high | |
| *P0976 | Shift solenoid-B (No.2) control circuit low | |
| *P0977 | Shift solenoid-B (No.2) control circuit high | |
| *P1702 | Internal control module memory check sum error | |
| *P1774 | Control module communication bus off | |
| *P1777 | TCM lost communication with ECM (Reception error) | |
| *P1874 | 4L switch circuit malfunction (Short) | |
| *P1875 | 4L switch circuit malfunction (Open) | |
| *P2763 | Torque converter clutch pressure control solenoid control circuit high | |
| *P2764 | Torque converter clutch pressure control solenoid control circuit low | |

www.cargeek.ir

www.CarGeek.ir


## Fail-Safe Table

S5JB0A1104006

When any of the following DTCs is detected, ECM enters fail-safe mode as long as malfunction continues to exist but that mode is canceled when ECM detects normal condition after that.

| DTC No. | Detected item | Fail-safe operation |
|---|---|---|
| ☞ P0030 | HO2S heater control circuit (Sensor-1) | ECM stops air/fuel ratio control. |
| ☞ P0031 | HO2S heater control circuit low (Sensor-1) | |
| ☞ P0032 | HO2S heater control circuit high (Sensor-1) | |
| ☞ P0102 | Mass air flow circuit low input | • ECM controls injector drive time (fuel injection volume) according to throttle valve opening (closed throttle position or not).<br>• ECM stops EGR control. |
| ☞ P0103 | Mass air flow circuit high input | |
| ☞ P0112 | Intake air temperature sensor circuit low | ECM controls actuators assuming that intake air temperature is 20 °C (68 °F). |
| ☞ P0113 | Intake air temperature sensor circuit high | |
| ☞ P0117 | Engine coolant temperature circuit low | • ECM controls actuators assuming that engine coolant temperature is 80 °C (176 °F).<br>• ECM operates radiator cooling fan. |
| ☞ P0118 | Engine coolant temperature circuit high | |
| ☞ P0122 | Throttle position sensor (main) circuit low | • ECM turns off throttle actuator control relay and throttle valve is fixed at the opening of about 7° from its completely closed position (default opening).<br>• ECM controls fuel cut at specified engine speed.<br>• ECM stops air/fuel ratio control. |
| ☞ P0123 | Throttle position sensor (main) circuit high | • ECM turns off throttle actuator control relay and throttle valve is fixed at the opening of about 7° from its completely closed position (default opening).<br>• ECM controls fuel cut at specified engine speed.<br>• ECM stops air/fuel ratio control. |
| ☞ P0131 | O2 sensor (HO2S) circuit low voltage (Sensor-1) | ECM stops air/fuel ratio control. |
| ☞ P0132 | O2 sensor (HO2S) circuit high voltage (Sensor-1) | |
| ☞ P0134 | O2 sensor (HO2S) circuit no activity detected (Sensor-1) | |
| ☞ P0222 | Throttle position sensor (sub) circuit low | • ECM turns off throttle actuator control relay and throttle valve is fixed at the opening of about 7° from its completely closed position (default opening).<br>• ECM controls fuel cut at specified engine speed. |
| ☞ P0223 | Throttle position sensor (sub) circuit high | |
| ☞ P0335 | Crankshaft position sensor circuit | Ignition timing is fixed. |
| ☞ P0500 | Vehicle speed sensor | ECM controls actuators assuming that vehicle speed is 0 km/h (0 mile/h). |
| ☞ P2101 | Throttle actuator control motor circuit range / performance | • ECM turns off throttle actuator control relay and throttle valve is fixed at the opening of about 7° from its completely closed position (default opening).<br>• ECM controls fuel cut at specified engine speed. |
| ☞ P2102 | Throttle actuator control motor circuit low | |
| ☞ P2103 | Throttle actuator control motor circuit high | ECM controls fuel cut at specified engine speed. |
| ☞ P2111 | Throttle actuator control system – stuck open | • Throttle valve is fixed at the opening of about 7° from its completely closed position (default opening).<br>• ECM controls fuel cut at specified engine speed. |
| ☞ P2119 | Throttle actuator control throttle body range / performance | • ECM turns off throttle actuator control relay and throttle valve is fixed at the opening of about 7° from its completely closed position (default opening).<br>• ECM controls fuel cut at specified engine speed. |

www.cargeek.ir

www.CarGeek.ir

| DTC No. | Detected item | Fail-safe operation |
|---|---|---|
| ☞ P2122 | Pedal position sensor (main) circuit low input | • Throttle valve is fixed at the opening of about 7° from its completely closed position (default opening).<br>• ECM controls fuel cut at specified engine speed. |
| ☞ P2123 | Pedal position sensor (main) circuit high input | |
| ☞ P2127 | Pedal position sensor (sub) circuit low input | |
| ☞ P2128 | Pedal position sensor (sub) circuit high input | |
| ☞ P2135 | Throttle position sensor (main) / (sub) voltage correlation | • ECM turns off throttle actuator control relay and throttle valve is fixed at the opening of about 7° from its completely closed position (default opening).<br>• ECM controls fuel cut at specified engine speed. |
| ☞ P2138 | Pedal position sensor (main) / (sub) voltage correlation | • Throttle valve is fixed at the opening of about 7° from its completely closed position (default opening).<br>• ECM controls fuel cut at specified engine speed. |
| ☞ P2227 | Barometric pressure sensor performance problem | ECM controls actuators assuming that barometric pressure is 101.33 kPa (762 mmHg). |

## Scan Tool Data

S5JB0A1104007

As the data values are standard values estimated on the basis of values obtained from the normally operating vehicles by using a scan tool, use them as reference values. Even when the vehicle is in good condition, there may be cases where the checked value does not fall within each specified data range. Therefore, judgment as abnormal should not be made by checking with these data alone.
Also, conditions that can be checked by the scan tool are those detected by ECM and output from ECM as commands and there may be cases where the engine or actuator is not operating (in the condition) as indicated by the scan tool. Be sure to use the timing light to check the ignition timing.

**NOTE**

- **With the generic scan tool, only star (*) marked data in the following table can be read.**
- **When checking the data with the engine running at idle or racing, be sure to shift M/T gear to the neutral gear position and A/T gear to the "Park" position and pull the parking brake fully. Also, if nothing or "no load" is indicated, turn OFF A/C (if equipped with A/C), all electric loads, P/S and all the other necessary switches.**

| | Scan tool data | Vehicle condition | | Normal condition / reference values |
|---|---|---|---|---|
| * | ☞COOLANT TEMP (ENGINE COOLANT TEMP.) | At specified idle speed after warming up | | 80 – 100 °C, 176 – 212 °F |
| * | ☞INTAKE AIR TEMP. | At specified idle speed after warming up | | –5 °C (23 °F) + environmental temp. to 40 °C (104 °F) + environmental temp. |
| * | ☞ENGINE SPEED | It idling with no load after warming up | | Desired idle speed ± 50 rpm |
| | ☞DESIRED IDLE (DESIRED IDLE SPEED) | It idling with radiator cooling fan stopped and all electrical parts turned OFF after warming up, M/T at neutral | | 650 rpm (for J20 engine), 660 rpm (for M16 engine) |
| * | ☞MAF (MASS AIR FLOW RATE) | At specified idle speed with no load after warming up | | 1.0 – 4.0 g/s 0.14 – 0.52 lb/min. |
| | | At 2500 r/min. with no load after warming up | | 4.0 – 12.0 g/s 0.53 – 1.58 lb/min. |
| * | ☞CALC LOAD (CALCULATED LOAD VALUE) | At specified idle speed with no load after warming up | | 0 – 10% |
| | | At 2500 r/min. with no load after warming up | | 0 – 10% |
| * | ☞MAP (INTAKE MANIFOLD ABSOLUTE PRESSURE) | At specified idle speed with no load after warming up | | 24 – 38 kPa, 7.1 – 11.2 in.Hg |
| * | ☞THROTTLE POSITION (ABSOLUTE THROTTLE POSITION) | Ignition switch ON / warmed up engine stopped | Accelerator pedal released | 0 – 5% |
| | | | Accelerator pedal depressed fully | 90 – 100% |
| | ☞ BAROMETRIC PRES | — | | Barometric pressure is displayed |

www.cargeek.ir

www.CarGeek.ir


| | Scan tool data | Vehicle condition | | Normal condition / reference values |
|---|---|---|---|---|
| | ☞ FUEL TANK LEVEL | Ignition switch ON | | 0 – 100% |
| | ☞ BATTERY VOLTAGE | Ignition switch ON / engine at stop | | 10 – 14 V |
| | ☞ BATTERY CURRENT (for J20 engine) | At 2000 r/min. with no load after warming up | | 10.0 – 16.0 V |
| | | At 2000 r/min. with headlight ON and blower motor switch at HI position after warming up | | 35.0 – 45.0 V |
| | ☞ BRAKE SWITCH | Ignition switch ON | Brake pedal is released | OFF |
| | | | Brake pedal is depressed | ON |
| | ☞ INTAKE TUNING SOL (INTAKE MANIFOLD TUNING VALVE) (for J20 engine) | At specified idle speed after warming up | | ON |
| | | Engine speed at 4700 rpm or more | | OFF |
| * | ☞ FUEL SYSTEM B1 (FUEL SYSTEM STATUS) | At specified idle speed after warming up | | CLSD (closed loop) |
| * | ☞ O2S B1 S2 (HEATED OXYGEN SENSOR-2) | At 2000 r/min. for 3 min. or longer after warming up | | 0.1 – 0.95 V |
| * | ☞ SHORT FT B1 (SHORT TERM FUEL TRIM) | At specified idle speed after warming up | | –20 – +20% |
| * | ☞ LONG FT B1 (LONG TERM FUEL TRIM) | At specified idle speed after warming up | | –20 – +20% |
| | ☞ TOTAL FUEL TRIM B1 | At specified idle speed after warming up | | –35 – +35% |
| * | ☞ A/F B1 S1 CURRENT (A/F SENSOR OUTPUT CURRENT) | At specified idle speed after warming up | | –0.20 – 0.10 mA |
| | ☞ FUEL CUT | Engine at fuel cut condition | | ON |
| | | Engine at other than fuel cut condition | | OFF |
| | ☞ O2S B1 S2 ACT (HEATED OXYGEN SENSOR-2) | At specified idle speed after warming up | | ACTIVE |
| | ☞ A/F B1 S1 ACT (A/F SENSOR) | At specified idle speed after warming up | | ACTIVE |
| | ☞ CANIST PRG DUTY (EVAP CANISTER PURGE FLOW DUTY) | At specified idle speed after warming up | | 0% |
| * | ☞ IGNITION ADVANCE (IGNITION TIMING ADVANCE FOR NO.1 CYLINDER) | At specified idle speed with no load after warming up | | 5 – 15° BTDC (for J20 engine), 7 – 17° BTDC (for M16 engine) |
| | ☞ EGR VALVE OPENING | At specified idle speed after warming up | | 0% |
| | ☞ VVT GAP (TARGET-ACTUAL POSITION) (for M16 engine) | At specified idle speed after warming up | | 0 – 3° |
| | ☞ GENERATOR CONT DUTY (GENERATOR CONTROL DUTY) | At specified idle speed with no load after warming up | | 100% |
| | ☞ GENERATOR FIELD DUTY (GENERATOR FIELD COIL DUTY) | At specified idle speed with no load after warming up | | 10.0 – 50.0% |
| | ☞ FUEL PUMP | Within 2 seconds after ignition switch ON or engine running | | ON |
| | | Engine at stop with ignition switch ON | | OFF |
| | ☞ STARTER SW (STARTER SWITCH) | Ignition switch is turned to ST (engine cranking) position | | ON |

www.cargeek.ir

www.CarGeek.ir

| | Scan tool data | Vehicle condition | | Normal condition / reference values |
|---|---|---|---|---|
| | ☞ A/C PRESSURE (A/C REFRIGERANT ABSOLUTE PRESSURE) | Engine running | A/C ON (A/C is operating) at ambient temperature: 30 °C (86 °F) and humidity: 50% | 1300 – 1480 kPa (for J20 engine), 1150 – 1280 kPa (for M16 engine) For more details, refer to pressure of high pressure gage under “A/C System Performance Inspection: in Section 7B”. |
| | | | A/C OFF (A/C is not operating) at ambient temperature: 30 °C (86 °F) and engine coolant temperature: 90 – 100 °C (194 – 212 °F) | 600 – 1000 kPa After longer than 10 min from A/C switch turned off |
| | ☞ A/C SWITCH | Engine running after warming up, A/C not operating | | OFF |
| | | Engine running after warming up, A/C operating | | ON |
| | ☞ A/C COMP RELAY | Engine running | A/C switch and blower motor switch turned ON | ON |
| | | | A/C switch and blower motor switch turned OFF | OFF |
| | ☞ BLOWER FAN | Ignition switch ON | Blower fan switch: 5th speed position or more | ON |
| | | | Blower fan switch: under 4th speed position | OFF |
| | ☞ ELECTRIC LOAD | Ignition switch ON / Headlight, small light, all turned OFF | | OFF |
| | | Ignition switch ON / Headlight, small light, turned ON | | ON |
| | ☞ PSP SWITCH (POWER STEERING PUMP PRESSURE SWITCH) | At specified idle speed and steering wheel at straight ahead position | | OFF |
| | | At specified idle speed and steering wheel turned to the right or left as far as it stops | | ON |
| | ☞ RADIATOR FAN LOW (RADIATOR COOLING FAN CONTROL RELAY No.1) | Ignition switch ON | Engine coolant temp.: Lower than 95 °C (203 °F) | OFF |
| | | | Engine coolant temp.: 97.5 °C (208 °F) or higher | ON |
| | ☞ RADIATOR FAN NO.1 HIGH (RADIATOR COOLING FAN CONTROL RELAY NO.2) | Ignition switch ON | Engine coolant temp.: lower than 100 °C (212 °F) | OFF |
| | | | Engine coolant temp.: 102.5 °C (212 °F) or higher | ON |
| | ☞ RADIATOR FAN NO.2 HIGH (RADIATOR COOLING FAN CONTROL RELAY NO.3) | Ignition switch ON | Engine coolant temp.: lower than 100 °C (212 °F) | OFF |
| | | | Engine coolant temp.: 102.5 °C (212 °F) or higher | ON |
| | ☞ TP SENSOR 1 VOLT (THROTTLE POSITION SENSOR (MAIN) OUTPUT VOLTAGE) | Ignition switch ON after warmed up engine | Accelerator pedal released | 0.7 – 1.2 V |
| | | | Accelerator pedal depressed fully | 3.6 – 4.3 V |
| | ☞ TP SENSOR 2 VOLT (THROTTLE POSITION SENSOR (SUB) OUTPUT VOLTAGE) | Ignition switch ON after warmed up engine | Accelerator pedal released | 1.6 – 2.0 V |
| | | | Accelerator pedal depressed fully | 3.8 – 4.5 V |
| | ☞ APP SENSOR 1 VOLT (ACCELERATOR PEDAL POSITION (APP) SENSOR (MAIN) OUTPUT VOLTAGE) | Ignition switch ON after warmed up engine | Accelerator pedal released | 0.7 – 0.8 V |
| | | | Accelerator pedal depressed fully | 3.5 – 4.3 V |

www.cargeek.ir

www.CarGeek.ir


| | Scan tool data | Vehicle condition | | Normal condition / reference values |
|---|---|---|---|---|
| | ☞ APP SENSOR 2 VOLT (ACCELERATOR PEDAL POSITION (APP) SENSOR (SUB) OUTPUT VOLTAGE) | Ignition switch ON after warmed up engine | Accelerator pedal released | 0.3 – 0.4 V |
| | | | Accelerator pedal depressed fully | 1.7 – 2.2 V |
| | ☞ ACCEL POSITION (ABSOLUTE ACCELERATOR PEDAL POSITION) | Ignition switch ON after warmed up engine | Accelerator pedal released | 0 – 5% |
| | | | Accelerator pedal depressed fully | 90 – 100% |
| | ☞ TARGET THROTTLE POSI (TARGET THROTTLE VALVE POSITION) | Ignition switch ON after warmed up engine | Accelerator pedal released | 0 – 5% |
| | | | Accelerator pedal depressed fully | 90 – 100% |
| | ☞ IAC THROTTLE OPENING (IDLE AIR CONTROL THROTTLE VALVE OPENING) | It idling with no load after warming up | | 5 – 55% |
| | ☞ THROTTLE MOTOR VOLT | Ignition switch ON / engine at stop | | 10.0 – 14.0 V |
| | ☞ CLOSED THROTTLE POS (CLOSED THROTTLE POSITION) | Throttle valve at idle position | | ON |
| | | Throttle valve opens larger than idle position | | OFF |
| | ☞ THROTTLE MOTOR RELAY | At specified idle speed after warming up | | ON |
| * | ☞ VEHICLE SPEED | At stop | | 0 km/h (0 mph) |
| | ☞ INJ PULSE WIDTH (FUEL INJECTION PULSE WIDTH) | At specified idle speed with no load after warming up | | 2.0 – 4.0 msec. |
| | | At 2500 r/min. with no load after warming up | | 2.0 – 3.6 msec. |

**Scan Tool Data Definitions**

**COOLANT TEMP (ENGINE COOLANT TEMPERATURE, °C, °F)**
It is detected by engine coolant temp. sensor.

**INTAKE AIR TEMP. (°C, °F)**
It is detected by intake air temp. sensor.

**ENGINE SPEED (rpm)**
It is computed by reference pulses from the camshaft position sensor.

**DESIRED IDLE (DESIRED IDLE SPEED, rpm)**
The Desired Idle Speed is an ECM internal parameter which indicates the ECM requested idle. If the engine is not running, this number is not valid.

**MAF (MASS AIR FLOW RATE, g/s, lb/min.)**
It represents total mass of air entering intake manifold which is measured by mass air flow sensor.

**CALC LOAD (CALCULATED LOAD VALUE, %)**
Engine load displayed as a percentage of maximum possible load. Value is calculated mathematically using the formula: actual (current) intake air volume ÷ maximum possible intake air volume × 100%

**MAP (MANIFOLD ABSOLUTE PRESSURE, in.Hg, kPa)**
This value indicates how much correction is necessary to keep the air/fuel mixture stoichiometrical.
It is detected by manifold absolute pressure sensor.

**THROTTLE POS (ABSOLUTE THROTTLE POSITION, %)**
When throttle position sensor is at fully closed position, throttle opening is indicated as 0 – 5% and 90 – 100% full open position.

**BAROMETRIC PRESS (kPa, in.Hg)**
This parameter represents a measurement of barometric air pressure and is used for altitude correction of the fuel injection quantity.

**FUEL TANK LEVEL (%):**
This parameter indicates approximate fuel level in fuel tank. As detectable range of fuel level sensor is set as 0 to 100%, however, with some models whose fuel tank capacity is smaller, indicated fuel level may be only 70% even when fuel tank is full.

**BATTERY VOLTAGE (V)**
This parameter indicates battery positive voltage inputted from main relay to ECM.

**BATTERY CURRENT (for J20 engine, A):**
This parameter indicates electric load value (consumed current) detected by electric load current sensor.

www.cargeek.ir

www.CarGeek.ir

**BRAKE SW (ON/OFF)**
This parameter indicates the state of the brake switch.

**INTAKE TUNING SOL (INTAKE MANIFOLD TUNING VALVE, ON/OFF):**
ON: Command for intake manifold tuning valve being output.
OFF: Command for intake manifold tuning valve not being output.

**FUEL SYSTEM (FUEL SYSTEM STATUS)**
Air/fuel ratio feedback loop status displayed as one of the followings.
OPEN: Open-loop has not yet satisfied conditions to go closed loop.
CLOSED: Closed-loop using oxygen sensor(s) as feedback for fuel control.
OPEN-DRIVE COND: Open-loop due to driving conditions (Power enrichment, etc.).
OPEN SYS FAULT: Open-loop due to detected system fault.

**O2S SENSOR B1 S2 (HEATED OXYGEN SENSOR-2, V)**
It indicates output voltage of HO2S-2 installed on exhaust No.1 pipe (post-catalyst). It is used to detect catalyst deterioration.

**SHORT FT B1 (SHORT TERM FUEL TRIM, %)**
Short term fuel trim value represents short term corrections to the air/fuel mixture computation. A value of 0 indicates no correction, a value greater than 0 means an enrichment correction, and a value less than 0 implies an enleanment correction.

**LONG FT B1 (LONG TERM FUEL TRIM, %)**
Long term fuel trim value represents long term corrections to the air/fuel mixture computation. A value of 0 indicates no correction, a value greater than 0 means an enrichment correction, and a value less than 0 implies an enleanment correction.

**TOTAL FUEL TRIM B1 (%)**
The value of Total Fuel Trim is obtained by calculating based on values of Short Term Fuel Trim and Long Term Fuel Trim. This value indicates how much correction is necessary to keep the air/fuel mixture stoichiometrical.

**A/F B1 S1 CURRENT (A/F SENSOR OUTPUT CURRENT, mA):**
This parameter indicates output current of A/F sensor installed on exhaust No.1 pipe (pre-catalyst).

**FUEL CUT (ON/OFF)**
ON: Fuel being cut (output signal to injector is stopped)
OFF: Fuel not being cut

**O2S B1 S2 ACT (HEATED OXYGEN SENSOR-2, ACTIVE / INACTIVE):**
This parameter indicates activation condition of HO2S-2
ACTIVE: Activating
INACTIVE: warming up or at stop.

**A/F B1 S1 ACT (A/F SENSOR, ACTIVE / INACTIVE):**
This parameter indicates activation condition of A/F sensor
ACTIVE: Activating
INACTIVE: warming up or at stop

**CANIST PRG DUTY (EVAP CANISTER PURGE FLOW DUTY, %)**
This parameter indicates valve ON (valve open) time rate within a certain set cycle of EVAP canister purge valve which controls the amount of EVAP purge.

**IGNITION ADVANCE (IGNITION TIMING ADVANCE FOR NO.1 CYLINDER, °)**
Ignition timing of No.1 cylinder is commanded by ECM. The actual ignition timing should be checked by using the timing light.

**EGR VALVE OPENING (%)**
This parameter indicates opening rate of EGR valve which controls the amount of EGR flow.

**VVT GAP (TARGET-ACTUAL POSITION, °) (for M16 engine)**
It is calculated using the formula: target valve timing advance – actual valve timing advance.

**GENERATOR CONT DUTY (GENERATOR CONTROL DUTY, %):**
This parameter indicates generator control duty which ECM uses to control amount of generated electricity of generator
100%: No restriction applied to generation
0%: Maximum restriction applied to generation

**GENERATOR FIELD DUTY (GENERATOR FIELD COIL DUTY, %):**
This parameter indicates operation rate (generation condition) of generator using operation duty of generator field coil.
100%: Maximum operation
0%: Minimum operation

**FUEL PUMP (ON/OFF)**
ON is displayed when ECM activates the fuel pump via the fuel pump relay switch.

**STARTER SW (STARTER SWITCH, ON / OFF):**
This parameter indicates condition of starting motor relay output.
ON: Starting motor relay is ON
OFF: Starting motor relay is OFF

**A/C PRESSURE (A/C REFRIGERANT ABSOLUTE PRESSURE, kPa)**
This parameter indicates A/C refrigerant absolute pressure calculated by ECM.

www.cargeek.ir

www.CarGeek.ir


**A/C SWITCH (ON/OFF)**
ON: Command for A/C operation being output from ECM to HVAC.
OFF: Command for A/C operation not being output.

**A/C COMP RELAY (A/C COMPRESSOR RELAY, ON/OFF)**
This parameter indicates the state of the A/C switch.

**BLOWER FAN (ON/OFF)**
This parameter indicates the state of the blower fan motor switch.

**ELECTRIC LOAD (ON/OFF)**
ON: Headlight, small light or rear defogger ON signal inputted.
OFF: Above electric loads all turned OFF.

**PSP SWITCH (POWER STEERING PUMP PRESSURE SWITCH, ON / OFF):**
ON: PSP SW is ON (P/S high pressure switch is ON)
OFF: PSP SW is OFF (P/S high pressure switch is OFF)

**RADIATOR COOLING FAN LOW (RADIATOR COOLING FAN CONTROL RELAY NO.1, ON/OFF)**
ON: Command for radiator cooling fan control relay No.1 operation being output.
OFF: Command for relay operation not being output.

**RDTR FAN NO.1 HIGH (RADIATOR COOLING FAN CONTROL RELAY NO.2, ON / OFF):**
ON: Command for radiator cooling fan control relay No.2 which changes radiator cooling fan No.1 to high speed operation being output.
OFF: Command for relay operation not being output

**RDTR FAN NO.2 HIGH (RADIATOR COOLING FAN CONTROL RELAY NO.3, ON / OFF)**
ON: Command for radiator cooling fan control relay No.3 which changes radiator cooling fan No.2 to high speed operation being output.
OFF: Command for relay operation not being output

**TP SENSOR 1 VOLT (THROTTLE POSITION SENSOR (MAIN) OUTPUT VOLTAGE, V)**
The Throttle Position Sensor (Main) reading provides throttle valve opening information in the form of voltage.

**TP SENSOR 2 VOLT (THROTTLE POSITION SENSOR (SUB) OUTPUT VOLTAGE, V)**
The Throttle Position Sensor (Sub) reading provides throttle valve opening information in the form of voltage.

**APP SENSOR 1 VOLT (ACCELERATOR PEDAL POSITION (APP) SENSOR (MAIN) OUTPUT VOLTAGE, V)**
The Accelerator Pedal Position (APP) Sensor (Main) reading provides accelerator pedal opening information in the form of voltage.

**APP SENSOR 2 VOLT (ACCELERATOR PEDAL POSITION (APP) SENSOR (SUB) OUTPUT VOLTAGE, V)**
The Accelerator Pedal Position (APP) Sensor (Sub) reading provides accelerator pedal opening information in the form of voltage.

**ACCEL POSITION (ABSOLUTE ACCELERATOR PEDAL POSITION, %)**
When accelerator pedal is at fully released position, accelerator pedal is indicated as 0 – 5% and 90 – 100% fully depressed position.

**TARGET THROTTLE POSI (TARGET THROTTLE VALVE POSITION, %)**
Target Throttle Valve Position is ECM internal parameter which indicates the ECM requested throttle valve position.

**IAC THROTTLE OPENING (IDLE AIR (SPEED) CONTROL THROTTLE VALVE OPENING, %):**
This parameter indicates throttle valve opening of idle air control in %.
(100% indicates the maximum idle air flow.)

**THROTTLE MOTOR VOLT (V):**
This parameter indicates power supply voltage of throttle actuator (motor) control circuit (input voltage from throttle actuator control relay).

**CLOSED THROTTLE POS (CLOSED THROTTLE POSITION, ON/OFF)**
This parameter reads ON when throttle valve is fully closed, or OFF when it is not fully closed.

**THROTTLE MOTOR RELAY (ON / OFF):**
ON: Throttle actuator (motor) control activated by ECM.
OFF: Throttle actuator (motor) control stopped by ECM.

**VEHICLE SPEED (km/h, mph)**
It is computed based on pulse signals from rear wheel speed sensor (RH, LH).

**INJ PULSE WIDTH (FUEL INJECTION PULSE WIDTH, msec.)**
This parameter indicates time of the injector drive (valve opening) pulse which is output from ECM (but injector drive time of NO.1 cylinder for multiport fuel injection).

www.cargeek.ir

www.CarGeek.ir

## Visual Inspection

S5JB0A1104008

Visually check the following parts and systems.

| Inspection item | Reference section |
|---|---|
| • Engine oil – level, leakage | "Engine Oil and Filter Change: in Section 0B" |
| • Engine coolant – level, leakage | "Coolant Level Check: in Section 1F" |
| • Fuel – level, leakage | "Fuel Lines and Connections Inspection: in Section 0B" |
| • Air cleaner element – dirt, clogging | "Air Cleaner Filter Inspection: in Section 0B" |
| • Battery – fluid level, corrosion of terminal | "Battery Description: in Section 1J" |
| • Water pump belt – tension damage | "Engine Accessory Drive Belt Inspection: in Section 0B" |
| • Throttle valve – operating sound | "Electric Throttle Body Assembly On-Vehicle Inspection: in Section 1C" |
| • Vacuum hoses of air intake system – disconnection, looseness, deterioration, bend | "Vacuum Hose and Purge Valve Chamber Inspection: in Section 1B" |
| • Connectors of electric wire harness – disconnection, friction | |
| • Fuses – burning | |
| • Parts – installation, bolt – looseness | |
| • Parts – deformation | |
| • Other parts that can be checked visually | |
| Also check the following items at engine start, if possible | |
| • Malfunction indicator lamp – Operation | "Malfunction Indicator Lamp (MIL) Check: " |
| • Charge warning lamp – Operation | "Generator Symptom Diagnosis: in Section 1J" |
| • Engine oil pressure warning lamp – Operation | "Oil Pressure Switch Inspection: in Section 9C" |
| • Engine coolant temp. meter – Operation | "Engine Coolant Temperature (ECT) Sensor Inspection: in Section 1C" |
| • Fuel level meter – Operation | "Fuel Level Sensor Inspection: in Section 9C" |
| • Tachometer – Operation | |
| • Abnormal air being inhaled from air intake system | |
| • Exhaust system – leakage of exhaust gas, noise | |
| • Other parts that can be checked visually | |

www.cargeek.ir
www.cargeek.ir

www.CarGeek.ir


## Engine Basic Inspection

S5JB0A1104009

This check is very important for troubleshooting when ECM has detected no DTC and no abnormality has been found in “Visual Inspection: ”.
Follow the flow carefully.

| Step | Action | Yes | No |
|---|---|---|---|
| 1 | *Was “Engine and Emission Control System Check” performed?* | Go to Step 2. | Go to “Engine and Emission Control System Check: ”. |
| 2 | **Check battery voltage**<br><br>*Is it 11 V or more?* | Go to Step 3. | Charge or replace battery. |
| 3 | *Is vehicle equipped with keyless start control system?* | Go to Step 4. | Go to Step 5. |
| 4 | **Check keyless start control system malfunction (if equipped keyless start control system)**<br>1) Check keyless start control system referring to “Keyless Start System Operation Inspection: in Section 10E”.<br><br>*Is check result satisfactory?* | Go to Step 5. | Keyless start control system malfunction. |
| 5 | *Is engine cranked?* | Go to Step 6. | Go to “Cranking System Symptom Diagnosis: in Section 1I”. |
| 6 | *Does engine start?* | Go to Step 7. | Go to Step 9. |
| 7 | **Check idle speed**<br>1) Warm up engine to normal operating temperature.<br>2) Shift transmission to neutral position for M/T model (“P” position for A/T).<br>3) Make sure that all electrical loads are switched off.<br>4) Check engine idle speed with scan tool.<br> 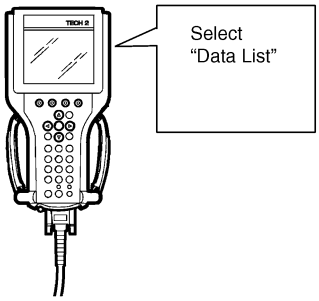 <br>I2RH01110005-01<br><br>*Is it 600 – 700 (for J20 engine), 610 – 710 (for M16 engine) r/min.?* | Go to Step 8. | Go to “Engine Symptom Diagnosis: ”. |

www.cargeek.ir

www.CarGeek.ir

| Step | Action | Yes | No |
|---|---|---|---|
| 8 | **Check ignition timing**<br>1) Using SUZUKI scan tool, select “Misc Test” mode on SUZUKI scan tool and fix ignition timing to initial one.<br> 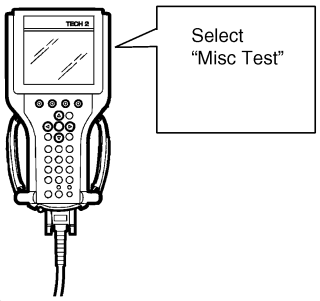 <br><br>I2RH01110006-01<br>2) Using timing light (1), check initial ignition timing.<br>**Special tool**<br>**(A): 09930–76420**<br>**For J20 engine**<br> 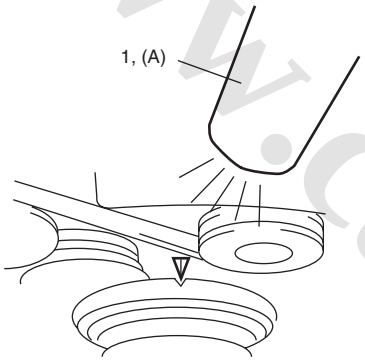 <br><br>I5JB0A110021-01<br>**For M16 engine**<br> 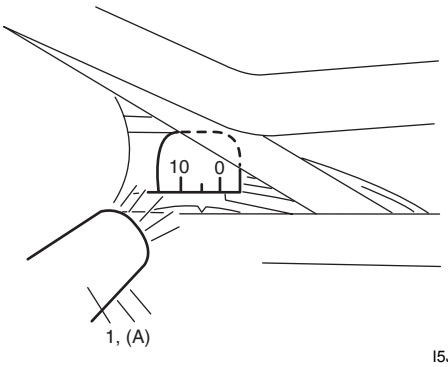 <br><br>I5JB0A110022-01<br>*Is it 5°– 15° (for J20 engine), 7°– 17° (for M16 engine) BTDC at specified idle speed?* | Go to “Engine Symptom Diagnosis: ”. | Check ignition control related parts referring to “Ignition Timing Inspection: in Section 1H”. |
| 9 | **Check immobilizer system malfunction (if equipped immobilizer control system)**<br>1) Check immobilizer control system referring to “Immobilizer Control System Check: in Section 10C”.<br>*Is it in good condition?* | Go to Step 10. | Immobilizer control system malfunction. |

www.cargeek.ir

www.CarGeek.ir


| Step | Action | Yes | No |
|---|---|---|---|
| 10 | **Check fuel supply**<br>1) Check to make sure that enough fuel is filled in fuel tank.<br>2) Turn ON ignition switch for 2 seconds and then OFF.<br>3) Repeat Step 2) a few times.<br>*Is fuel pressure felt from fuel feed hose when ignition switch is turned ON?*<br>**For J20 engine**<br> 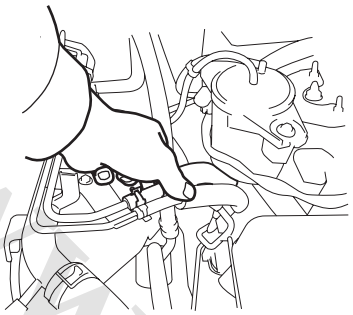 <br>I5JB0A110023-01<br>**For M16 engine**<br> 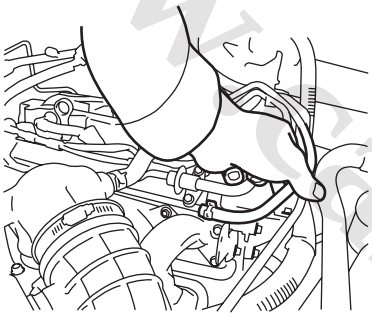 <br>I5JB0A110024-01 | Go to Step 12. | Go to Step 11. |
| 11 | **Check fuel pump for operation**<br>*Was fuel pump operating sound heard from fuel filler for about 2 seconds after ignition switch ON and stop?* | Go to “Fuel Pressure Check: ”. | Go to “Fuel Pump and Its Circuit Check: ”. |
| 12 | **Check ignition spark**<br>1) Disconnect injector couplers.<br>2) Remove spark plugs and connect them to high-tension cords or ignition coil assemblies.<br>3) Ground spark plugs.<br>4) Crank engine and check if each spark plug sparks.<br>*Is it in good condition?* | Go to Step 13. | Go to “Ignition Spark Test: in Section 1H”. |

www.cargeek.ir

www.CarGeek.ir

| Step | Action | Yes | No |
|---|---|---|---|
| 13 | **Check fuel injector for operation**<br>1) Install spark plugs and connect injector connectors.<br>2) Using sound scope (1), check operating sound of each injector (2) when cranking engine.<br> 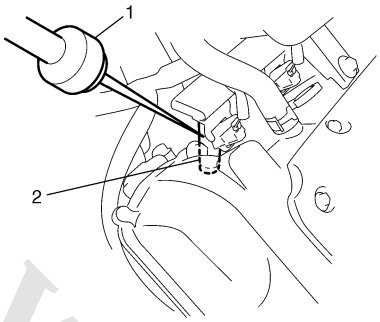 <br><br>I3RM0A110015-01<br>*Was injector operating sound heard from all injectors?* | Go to “Engine Symptom Diagnosis: ”. | Go to “Fuel Injector Circuit Check: ”. |

www.cargeek.ir

www.cargeek.ir

www.CarGeek.ir


## Engine Symptom Diagnosis

S5JB0A1104010

Perform troubleshooting referring to the followings when ECM has detected no DTC and no abnormality has been found in “Visual Inspection: ” and “Engine Basic Inspection: ”.

| Condition | Possible cause | Correction / Reference Item |
|---|---|---|
| ***Hard starting (Engine cranks OK)*** | Faulty spark plug | *“Spark Plug Inspection: in Section 1H”* |
| | Leaky high-tension cord (for M16 engine) | *“High-Tension Cord Inspection (For M16 Engine): in Section 1H”* |
| | Loose connection or disconnection of high-tension cord(s) or lead wire(s) (for M16 engine) | *“High-Tension Cord Removal and Installation (For M16 Engine): in Section 1H”* |
| | Faulty ignition coil | *“Ignition Coil Assembly (Including ignitor) Inspection: in Section 1H”* |
| | Dirty or clogged fuel hose or pipe | *“Fuel Pressure Check: ”* |
| | Malfunctioning fuel pump | *“Fuel Pressure Check: ”* |
| | Air drawn in through intake manifold gasket or throttle body gasket | |
| | Faulty electric throttle body assembly | *“Electric Throttle Body Assembly On-Vehicle Inspection: in Section 1C”* |
| | Faulty accelerator pedal position (APP) sensor assembly | *“Accelerator Pedal Position (APP) Sensor Assembly Inspection: in Section 1C”* |
| | Faulty ECT sensor or MAF sensor | *“Engine Coolant Temperature (ECT) Sensor Inspection: in Section 1C” or “Mass Air Flow (MAF) and Intake Air Temperature (IAT) Sensor Inspection: in Section 1C”* |
| | Faulty ECM | |
| | Low compression | *“Compression Check: For M16A Engine with VVT in Section 1D” or “Compression Check: For J20 Engine in Section 1D”* |
| | Poor spark plug tightening or faulty gasket | *“Spark Plug Removal and Installation: in Section 1H”* |
| | Compression leak from valve seat | *“Valves and Valve Guides Inspection: For J20 Engine in Section 1D” or “Valves and Valve Guides Inspection: For M16A Engine with VVT in Section 1D”.* |
| | Sticky valve stem | *“Valves and Valve Guides Inspection: For J20 Engine in Section 1D” or “Valves and Valve Guides Inspection: For M16A Engine with VVT in Section 1D”.* |
| | Weak or damaged valve springs | *“Valve Spring Inspection: For J20 Engine in Section 1D” or “Valve Spring Inspection: For M16A Engine with VVT in Section 1D”* |
| | Compression leak at cylinder head gasket | *“Cylinder Head Inspection: For J20 Engine in Section 1D” or “Cylinder Head Inspection: For M16A Engine with VVT in Section 1D”* |
| | Sticking or damaged piston ring | *“Pistons, Piston Rings, Connecting Rods and Cylinders Inspection and Cleaning: For J20 Engine in Section 1D” or “Cylinders, Pistons and Piston Rings Inspection: For M16A Engine with VVT in Section 1D”* |
| | Worn piston, ring or cylinder | *“Pistons, Piston Rings, Connecting Rods and Cylinders Inspection and Cleaning: For J20 Engine in Section 1D” or “Cylinders, Pistons and Piston Rings Inspection: For M16A Engine with VVT in Section 1D”* |
| | Malfunctioning PCV valve | *“PCV Valve Inspection: in Section 1B”* |
| | Camshaft position control (VVT) system out of order (for M16 engine) | *“Oil Control Valve Inspection: For M16A Engine with VVT in Section 1D”* |
| | Faulty EGR system | *“EGR System Inspection: in Section 1B”* |

www.cargeek.ir

www.CarGeek.ir

| Condition | Possible cause | Correction / Reference Item |
|---|---|---|
| ***Low oil pressure*** | Improper oil viscosity | *"Engine Oil and Filter Change: in Section 0B"* |
| | Malfunctioning oil pressure switch | *"Oil Pressure Switch Inspection: in Section 9C"* |
| | Clogged oil strainer | *"Oil Pan and Oil Pump Strainer Cleaning: For J20 Engine in Section 1E" or "Oil Pan and Oil Pump Strainer Cleaning: For M16A Engine with VVT in Section 1E"* |
| | Functional deterioration of oil pump | *"Oil Pump Inspection: For J20 Engine in Section 1E" or "Oil Pump Inspection: For M16A Engine with VVT in Section 1E"* |
| | Worn oil pump relief valve | *"Oil Pump Inspection: For J20 Engine in Section 1E" or "Oil Pump Inspection: For M16A Engine with VVT in Section 1E"* |
| | Excessive clearance in various sliding parts | |
| ***Engine noise – Valve noise***<br>***NOTE***<br>***Before checking mechanical noise, make sure that:***<br>• ***Specified spark plug is used.***<br>• ***Specified fuel is used.*** | Improper valve lash | *"Camshaft, Tappet and Shim Inspection: For J20 Engine in Section 1D" or "Camshaft, Tappet and Shim Inspection: For M16A Engine with VVT in Section 1D"* |
| | Worn valve stem and guide | *"Valves and Valve Guides Inspection: For J20 Engine in Section 1D" or "Valves and Valve Guides Inspection: For M16A Engine with VVT in Section 1D".* |
| | Weak or broken valve spring | *"Valve Spring Inspection: For J20 Engine in Section 1D" or "Valve Spring Inspection: For M16A Engine with VVT in Section 1D"* |
| | Warped or bent valve | *"Valves and Valve Guides Inspection: For J20 Engine in Section 1D" or "Valves and Valve Guides Inspection: For M16A Engine with VVT in Section 1D".* |
| ***Engine noise – Piston, ring and cylinder noise***<br>***NOTE***<br>***Before checking mechanical noise, make sure that:***<br>• ***Specified spark plug is used.***<br>• ***Specified fuel is used.*** | Worn piston, ring and cylinder bore | *"Pistons, Piston Rings, Connecting Rods and Cylinders Inspection and Cleaning: For J20 Engine in Section 1D" or "Cylinders, Pistons and Piston Rings Inspection: For M16A Engine with VVT in Section 1D"* |

www.cargeek.ir

www.CarGeek.ir


| Condition | Possible cause | Correction / Reference Item |
|---|---|---|
| ***Engine noise – Connecting rod noise***<br><br>***NOTE***<br><br>***Before checking mechanical noise, make sure that:***<br>• ***Specified spark plug is used.***<br>• ***Specified fuel is used.*** | Worn piston, ring and cylinder bore | *"Pistons, Piston Rings, Connecting Rods and Cylinders Inspection and Cleaning: For J20 Engine in Section 1D" or "Cylinders, Pistons and Piston Rings Inspection: For M16A Engine with VVT in Section 1D"* |
| | Worn rod bearing | *"Pistons, Piston Rings, Connecting Rods and Cylinders Inspection and Cleaning: For J20 Engine in Section 1D" or "Crank Pin and Connecting Rod Bearings Inspection: For M16A Engine with VVT in Section 1D"* |
| | Worn crank pin | *"Pistons, Piston Rings, Connecting Rods and Cylinders Inspection and Cleaning: For J20 Engine in Section 1D" or "Crank Pin and Connecting Rod Bearings Inspection: For M16A Engine with VVT in Section 1D"* |
| | Loose connecting rod nuts | *"Pistons, Piston Rings, Connecting Rods and Cylinders Removal and Installation: For J20 Engine in Section 1D" or "Pistons, Piston Rings, Connecting Rods and Cylinders Removal and Installation: For M16A Engine with VVT in Section 1D"* |
| | Low oil pressure | *Condition "Low oil pressure"* |
| ***Engine noise – Crankshaft noise***<br><br>***NOTE***<br><br>***Before checking mechanical noise, make sure that:***<br>• ***Specified spark plug is used.***<br>• ***Specified fuel is used.*** | Low oil pressure | *Condition "Low oil pressure"* |
| | Worn bearing | *"Main Bearings, Crankshaft and Cylinder Block Inspection: For J20 Engine in Section 1D" or "Main Bearings Inspection: For M16A Engine with VVT in Section 1D"* |
| | Worn crankshaft journal | *"Main Bearings, Crankshaft and Cylinder Block Inspection: For J20 Engine in Section 1D" or "Crankshaft Inspection: For M16A Engine with VVT in Section 1D"* |
| | Loose bearing cap bolts | *"Main Bearings, Crankshaft and Cylinder Block Removal and Installation: For J20 Engine in Section 1D" or "Main Bearings, Crankshaft and Cylinder Block Removal and Installation: For M16A Engine with VVT in Section 1D"* |
| | Excessive crankshaft thrust play | *"Main Bearings, Crankshaft and Cylinder Block Inspection: For J20 Engine in Section 1D" or "Crankshaft Inspection: For M16A Engine with VVT in Section 1D"* |

www.cargeek.ir

www.CarGeek.ir

| Condition | Possible cause | Correction / Reference Item |
|---|---|---|
| ***Engine overheating*** | Inoperative thermostat | *"Thermostat Inspection: in Section 1F"* |
| | Poor water pump performance | *"Water Pump Inspection: in Section 1F"* |
| | Clogged or leaky radiator | *"Radiator On-Vehicle Inspection and Cleaning: in Section 1F"* |
| | Improper engine oil grade | *"Engine Oil and Filter Change: in Section 0B"* |
| | Clogged oil filter or oil strainer | *"Oil Pressure Check: For J20 Engine in Section 1E" or "Oil Pressure Check: For M16A Engine with VVT in Section 1E"* |
| | Poor oil pump performance | *"Oil Pressure Check: For J20 Engine in Section 1E" or "Oil Pressure Check: For M16A Engine with VVT in Section 1E"* |
| | Faulty radiator cooling fan control system | *"Radiator Cooling Fan Low Speed Control System Check: " or "Radiator Cooling Fan High Speed Control System Check: "* |
| | Dragging brakes | *Condition "Dragging brakes" in "Brakes Symptom Diagnosis: in Section 4A"* |
| | Slipping clutch (for M/T model) | *Condition "Slipping clutch" in "Clutch (Hydraulic Type) Symptom Diagnosis: in Section 5C"* |
| | Blown cylinder head gasket | *"Cylinder Head Inspection: For J20 Engine in Section 1D" or "Cylinder Head Inspection: For M16A Engine with VVT in Section 1D"* |
| | Air mixed in cooling system | |
| ***Poor gasoline mileage*** | Leaks or loose connection of high-tension cord (for M16 engine) | *"High-Tension Cord Removal and Installation (For M16 Engine): in Section 1H"* |
| | Faulty spark plug (improper gap, heavy deposits and burned electrodes, etc.) | *"Spark Plug Inspection: in Section 1H"* |
| | Malfunctioning EGR valve | *"EGR Valve Inspection: in Section 1B"* |
| | High idle speed | *Condition "Improper engine idling or engine fails to idle"* |
| | Poor performance of ECT sensor or MAF sensor | *"Engine Coolant Temperature (ECT) Sensor Inspection: in Section 1C" or "Mass Air Flow (MAF) and Intake Air Temperature (IAT) Sensor Inspection: in Section 1C"* |
| | Faulty electric throttle body assembly | *"Electric Throttle Body Assembly On-Vehicle Inspection: in Section 1C"* |
| | Faulty accelerator pedal position (APP) sensor assembly | *"Accelerator Pedal Position (APP) Sensor Assembly Inspection: in Section 1C"* |
| | Faulty fuel injector(s) | *"Fuel Injector Circuit Check: "* |
| | Faulty ECM | |
| | Low compression | *"Compression Check: For J20 Engine in Section 1D" or "Compression Check: For M16A Engine with VVT in Section 1D"* |
| | Poor valve seating | *"Valves and Valve Guides Inspection: For J20 Engine in Section 1D" or "Valves and Valve Guides Inspection: For M16A Engine with VVT in Section 1D"* |
| | Dragging brakes | *Condition "Dragging brakes" in "Brakes Symptom Diagnosis: in Section 4A"* |
| | Slipping clutch (for M/T model) | *Condition "Slipping clutch" in "Clutch (Hydraulic Type) Symptom Diagnosis: in Section 5C"* |
| | Thermostat out of order | *"Thermostat Inspection: in Section 1F"* |
| | Improper tire pressure | *"Tires Description: in Section 2D"* |
| | Camshaft position control (VVT) system out of order (for M16 engine) | *"Oil Control Valve Inspection: For M16A Engine with VVT in Section 1D"* |

www.cargeek.ir

www.CarGeek.ir


| Condition | Possible cause | Correction / Reference Item |
|---|---|---|
| ***Excessive engine oil consumption – Oil leakage*** | Blown cylinder head gasket | *"Cylinder Head Inspection: For J20 Engine in Section 1D" or "Cylinder Head Inspection: For M16A Engine with VVT in Section 1D"* |
| | Leaky camshaft oil seals | *"Camshaft, Tappet and Shim Inspection: For J20 Engine in Section 1D" or "Camshaft, Tappet and Shim Inspection: For M16A Engine with VVT in Section 1D"* |
| ***Excessive engine oil consumption – Oil entering combustion chamber*** | Sticky piston ring | *"Pistons, Piston Rings, Connecting Rods and Cylinders Inspection and Cleaning: For J20 Engine in Section 1D" or "Cylinders, Pistons and Piston Rings Inspection: For M16A Engine with VVT in Section 1D"* |
| | Worn piston and cylinder | *"Pistons, Piston Rings, Connecting Rods and Cylinders Inspection and Cleaning: For J20 Engine in Section 1D" or "Cylinders, Pistons and Piston Rings Inspection: For M16A Engine with VVT in Section 1D"* |
| | Worn piston ring groove and ring | *"Pistons, Piston Rings, Connecting Rods and Cylinders Inspection and Cleaning: For J20 Engine in Section 1D" or "Cylinders, Pistons and Piston Rings Inspection: For M16A Engine with VVT in Section 1D"* |
| | Improper location of piston ring gap | *"Pistons, Piston Rings, Connecting Rods and Cylinders Disassembly and Assembly: For J20 Engine in Section 1D" or "Pistons, Piston Rings, Connecting Rods and Cylinders Disassembly and Assembly: For M16A Engine with VVT in Section 1D"* |
| | Worn or damaged valve stem seal | *"Valves and Valve Guides Inspection: For J20 Engine in Section 1D" or "Valves and Valve Guides Inspection: For M16A Engine with VVT in Section 1D"* |
| | Worn valve stem | *"Valves and Valve Guides Inspection: For J20 Engine in Section 1D" or "Valves and Valve Guides Inspection: For M16A Engine with VVT in Section 1D"* |
| ***Engine hesitates – Momentary lack of response as accelerator is depressed. Can occur at all vehicle speeds. Usually most severe when first trying to make vehicle move, as from a stop sign*** | Spark plug faulty or plug gap out of adjustment | *"Spark Plug Inspection: in Section 1H"* |
| | Leaky high-tension cord (for M16 engine) | *"High-Tension Cord Inspection (For M16 Engine): in Section 1H"* |
| | Fuel pressure out of specification | *"Fuel Pressure Check: "* |
| | Malfunctioning EGR valve | *"EGR Valve Inspection: in Section 1B"* |
| | Poor performance of ECT sensor or MAF sensor | *"Engine Coolant Temperature (ECT) Sensor Inspection: in Section 1C" or "Mass Air Flow (MAF) and Intake Air Temperature (IAT) Sensor Inspection: in Section 1C"* |
| | Faulty electric throttle body assembly | *"Electric Throttle Body Assembly On-Vehicle Inspection: in Section 1C"* |
| | Faulty accelerator pedal position (APP) sensor assembly | *"Accelerator Pedal Position (APP) Sensor Assembly Inspection: in Section 1C"* |
| | Faulty fuel injector | *"Fuel Injector Circuit Check: "* |
| | Faulty ECM | |
| | Engine overheating | *Condition "Engine overheating"* |
| | Low compression | *"Compression Check: For J20 Engine in Section 1D" or "Compression Check: For M16A Engine with VVT in Section 1D"* |
| | Camshaft position control (VVT) system out of order (for M16 engine) | *"Oil Control Valve Inspection: For M16A Engine with VVT in Section 1D"* |

www.cargeek.ir

www.CarGeek.ir

| Condition | Possible cause | Correction / Reference Item |
|---|---|---|
| ***Surge – Engine power variation under steady throttle or cruise. Feels like vehicle speeds up and down with no change in accelerator pedal*** | Leaky or loosely connected high-tension cord (for M16 engine) | *"High-Tension Cord Removal and Installation (For M16 Engine): in Section 1H"* |
| | Faulty spark plug (excess carbon deposits, improper gap, burned electrodes, etc.) | *"Spark Plug Inspection: in Section 1H"* |
| | Variable fuel pressure | *"Fuel Pressure Check: "* |
| | Kinky or damaged fuel hose and lines | |
| | Faulty fuel pump (clogged fuel filter) | |
| | Malfunctioning EGR valve | *"EGR Valve Inspection: in Section 1B"* |
| | Poor performance of MAF sensor | *"Mass Air Flow (MAF) and Intake Air Temperature (IAT) Sensor Inspection: in Section 1C"* |
| | Faulty fuel injector | *"Fuel Injector Circuit Check: "* |
| | Faulty ECM | |
| | Faulty electric throttle body assembly | *"Electric Throttle Body Assembly On-Vehicle Inspection: in Section 1C"* |
| | Faulty accelerator pedal position (APP) sensor assembly | *"Accelerator Pedal Position (APP) Sensor Assembly Inspection: in Section 1C"* |
| ***Excessive detonation – Engine makes continuously sharp metallic knocks that change with throttle opening. Sounds like pop corn popping*** | Faulty spark plug | *"Spark Plug Inspection: in Section 1H"* |
| | Loose connection of high-tension cord (for M16 engine) | *"High-Tension Cord Removal and Installation (For M16 Engine): in Section 1H"* |
| | Engine overheating | *Condition "Engine overheating"* |
| | Clogged fuel filter (faulty fuel pump) or fuel lines | *"Fuel Pressure Check: " or "Fuel Pump and Its Circuit Check: "* |
| | Air drawn in through intake manifold or throttle body gasket | |
| | Malfunctioning EGR valve | *"EGR Valve Inspection: in Section 1B"* |
| | Poor performance of knock sensor, ECT sensor or MAF sensor | *"DTC P0327 / P0328: Knock Sensor Circuit Low / High: ", "Engine Coolant Temperature (ECT) Sensor Inspection: in Section 1C" or "Mass Air Flow (MAF) and Intake Air Temperature (IAT) Sensor Inspection: in Section 1C"* |
| | Faulty fuel injector(s) | *"Fuel Injector Circuit Check: "* |
| | Faulty ECM | |
| | Excessive combustion chamber deposits | *"Pistons, Piston Rings, Connecting Rods and Cylinders Inspection and Cleaning: For J20 Engine in Section 1D" or "Cylinders, Pistons and Piston Rings Inspection: For M16A Engine with VVT in Section 1D" and/or "Piston Pins and Connecting Rods Inspection: For M16A Engine with VVT in Section 1D"* |
| | Camshaft position control (VVT) system out of order (for M16 engine) | *"Oil Control Valve Inspection: For M16A Engine with VVT in Section 1D"* |

www.cargeek.ir

www.CarGeek.ir


| Condition | Possible cause | Correction / Reference Item |
|---|---|---|
| ***Engine has no power*** | Faulty spark plug | *"Spark Plug Inspection: in Section 1H"* |
| | Faulty ignition coil with ignitor | *"Ignition Coil Assembly (Including ignitor) Inspection: in Section 1H"* |
| | Leaks, loose connection or disconnection of high-tension cord (for M16 engine) | *"High-Tension Cord Removal and Installation (For M16 Engine): in Section 1H"* |
| | Faulty knock sensor | *"DTC P0327 / P0328: Knock Sensor Circuit Low / High: "* |
| | Clogged fuel hose or pipe | *"Fuel Pressure Check: "* |
| | Malfunctioning fuel pump | *"Fuel Pump and Its Circuit Check: "* |
| | Air drawn in through intake manifold gasket or throttle body gasket | |
| | Engine overheating | *Condition "Engine overheating"* |
| | Malfunctioning EGR valve | *"EGR Valve Inspection: in Section 1B"* |
| | Poor performance of ECT sensor or MAF sensor | *"Engine Coolant Temperature (ECT) Sensor Inspection: in Section 1C" or "Mass Air Flow (MAF) and Intake Air Temperature (IAT) Sensor Inspection: in Section 1C"* |
| | Faulty electric throttle body assembly | *"Electric Throttle Body Assembly On-Vehicle Inspection: in Section 1C"* |
| | Faulty accelerator pedal position (APP) sensor assembly | *"Accelerator Pedal Position (APP) Sensor Assembly Inspection: in Section 1C"* |
| | Faulty fuel injector(s) | *"Fuel Injector Circuit Check: "* |
| | Faulty ECM | |
| | Dragging brakes | *Condition "Dragging brakes" in "Brakes Symptom Diagnosis: in Section 4A"* |
| | Slipping clutch (for M/T model) | *Condition "Slipping clutch" in "Clutch (Hydraulic Type) Symptom Diagnosis: in Section 5C"* |
| | Low compression | *"Compression Check: For J20 Engine in Section 1D" or "Compression Check: For M16A Engine with VVT in Section 1D"* |
| | Camshaft position control (VVT) system out of order (for M16 engine) | *"Oil Control Valve Inspection: For M16A Engine with VVT in Section 1D"* |
| | Faulty intake manifold tuning vacuum solenoid valve (for J20 engine) | *"Vacuum Tank Assembly Inspection (For J20 Engine): in Section 1C"* |

www.cargeek.ir
www.cargeek.ir

www.CarGeek.ir

| Condition | Possible cause | Correction / Reference Item |
|---|---|---|
| ***Improper engine idling or engine fails to idle*** | Faulty spark plug | *"Spark Plug Inspection: in Section 1H"* |
| | Leaky or disconnected high-tension cord (for M16 engine) | *"High-Tension Cord Removal and Installation (For M16 Engine): in Section 1H"* |
| | Faulty ignition coil with ignitor | *"Ignition Coil Assembly (Including ignitor) Inspection: in Section 1H"* |
| | Fuel pressure out of specification | *"Fuel Pressure Check: "* |
| | Leaky manifold, throttle body, or cylinder head gasket | |
| | Malfunctioning EGR valve | *"EGR Valve Inspection: in Section 1B"* |
| | Faulty evaporative emission control system | *"EVAP Canister Purge Inspection: in Section 1B"* |
| | Faulty EGR system | *"EGR System Inspection: in Section 1B"* |
| | Faulty fuel injector(s) | *"Fuel Injector Circuit Check: "* |
| | Poor performance of ECT sensor or MAF sensor | *"Engine Coolant Temperature (ECT) Sensor Inspection: in Section 1C" or "Mass Air Flow (MAF) and Intake Air Temperature (IAT) Sensor Inspection: in Section 1C"* |
| | Faulty electric throttle body assembly | *"Electric Throttle Body Assembly On-Vehicle Inspection: in Section 1C"* |
| | Faulty accelerator pedal position (APP) sensor assembly | *"Accelerator Pedal Position (APP) Sensor Assembly Inspection: in Section 1C"* |
| | Faulty ECM | |
| | Loose connection or disconnection of vacuum hoses | |
| | Malfunctioning PCV valve | *"PCV Valve Inspection: in Section 1B"* |
| | Engine overheating | *Condition "Engine overheating"* |
| | Low compression | *"Compression Check: For J20 Engine in Section 1D" or "Compression Check: For M16A Engine with VVT in Section 1D"* |
| | Camshaft position control (VVT) system out of order (for M16 engine) | *"Oil Control Valve Inspection: For M16A Engine with VVT in Section 1D"* |
| | Faulty electric load parts (headlight, blower motor and/or rear defogger) | *"Electric Load Signal Circuit Check: "* |
| | Faulty electric load current sensor (for J20 engine) | *"Electric Load Current Sensor On-Vehicle Inspection (For J20 Engine): in Section 1C"* |
| | Faulty generator and/or its circuit | *"DTC P0620: Generator Control Circuit: " and "DTC P0625 / P0626: Generator Field Terminal Circuit Low / High: "* |

www.cargeek.ir

www.CarGeek.ir


| Condition | Possible cause | Correction / Reference Item |
|---|---|---|
| ***Excessive hydrocarbon (HC) emission or carbon monoxide (CO)*** | Faulty spark plug | *"Spark Plug Inspection: in Section 1H"* |
| | Leaky or disconnected high-tension cord (for M16 engine) | *"High-Tension Cord Removal and Installation (For M16 Engine): in Section 1H"* |
| | Faulty ignition coil with ignitor | *"Ignition Coil Assembly (Including ignitor) Inspection: in Section 1H"* |
| | Low compression | *"Compression Check: For J20 Engine in Section 1D" or "Compression Check: For M16A Engine with VVT in Section 1D"* |
| | Lead contamination of three way catalytic converter | *Check for absence of filler neck restrictor.* |
| | Faulty evaporative emission control system | *"EVAP Canister Purge Inspection: in Section 1B"* |
| | Fuel pressure out of specification | *"Fuel Pressure Check: "* |
| | Closed loop system (A/F feedback compensation) fails (Faulty TP sensor, Poor performance of ECT sensor or MAF sensor) | *"Electric Throttle Body Assembly On-Vehicle Inspection: in Section 1C", "Engine Coolant Temperature (ECT) Sensor Inspection: in Section 1C" or "Mass Air Flow (MAF) and Intake Air Temperature (IAT) Sensor Inspection: in Section 1C"* |
| | Faulty electric throttle body assembly | *"Electric Throttle Body Assembly On-Vehicle Inspection: in Section 1C"* |
| | Faulty accelerator pedal position (APP) sensor assembly | *"Accelerator Pedal Position (APP) Sensor Assembly Inspection: in Section 1C"* |
| | Faulty injector(s) | *"Fuel Injector Circuit Check: "* |
| | Faulty ECM | |
| | Engine not at normal operating temperature | |
| | Clogged air cleaner | *"Air Cleaner Filter Inspection and Cleaning: For J20 Engine in Section 1D" or "Air Cleaner Filter Inspection and Cleaning: For M16A Engine with VVT in Section 1D"* |
| | Vacuum leaks | *"Engine Vacuum Check: For J20 Engine in Section 1D" or "Engine Vacuum Check: For M16A Engine with VVT in Section 1D"* |
| | Camshaft position control (VVT) system out of order (for M16 engine) | *"Oil Control Valve Inspection: For M16A Engine with VVT in Section 1D"* |
| ***Excessive nitrogen oxides (NOx) emission*** | Improper ignition timing | *"Ignition Timing Inspection: in Section 1H"* |
| | Lead contamination of catalytic converter | *Check for absence of filler neck restrictor.* |
| | Faulty EGR system | *"EGR System Inspection: in Section 1B"* |
| | Fuel pressure out of specification | *"Fuel Pressure Check: "* |
| | Closed loop system (A/F feedback compensation) fails (Faulty TP sensor, Poor performance of ECT sensor or MAF sensor) | *"Electric Throttle Body Assembly On-Vehicle Inspection: in Section 1C", "Engine Coolant Temperature (ECT) Sensor Inspection: in Section 1C" or "Mass Air Flow (MAF) and Intake Air Temperature (IAT) Sensor Inspection: in Section 1C"* |
| | Faulty electric throttle body assembly | *"Electric Throttle Body Assembly On-Vehicle Inspection: in Section 1C"* |
| | Faulty accelerator pedal position (APP) sensor assembly | *"Accelerator Pedal Position (APP) Sensor Assembly Inspection: in Section 1C"* |
| | Faulty injector(s) | *"Fuel Injector Circuit Check: "* |
| | Faulty ECM | |
| | Camshaft position control (VVT) system out of order (for M16 engine) | *"Oil Control Valve Inspection: For M16A Engine with VVT in Section 1D"* |

www.cargeek.ir

www.CarGeek.ir

## Malfunction Indicator Lamp Does Not Come ON with Ignition Switch ON and Engine Stop (but Engine Can Be Started)

S5JB0A1104011

### Wiring Diagram

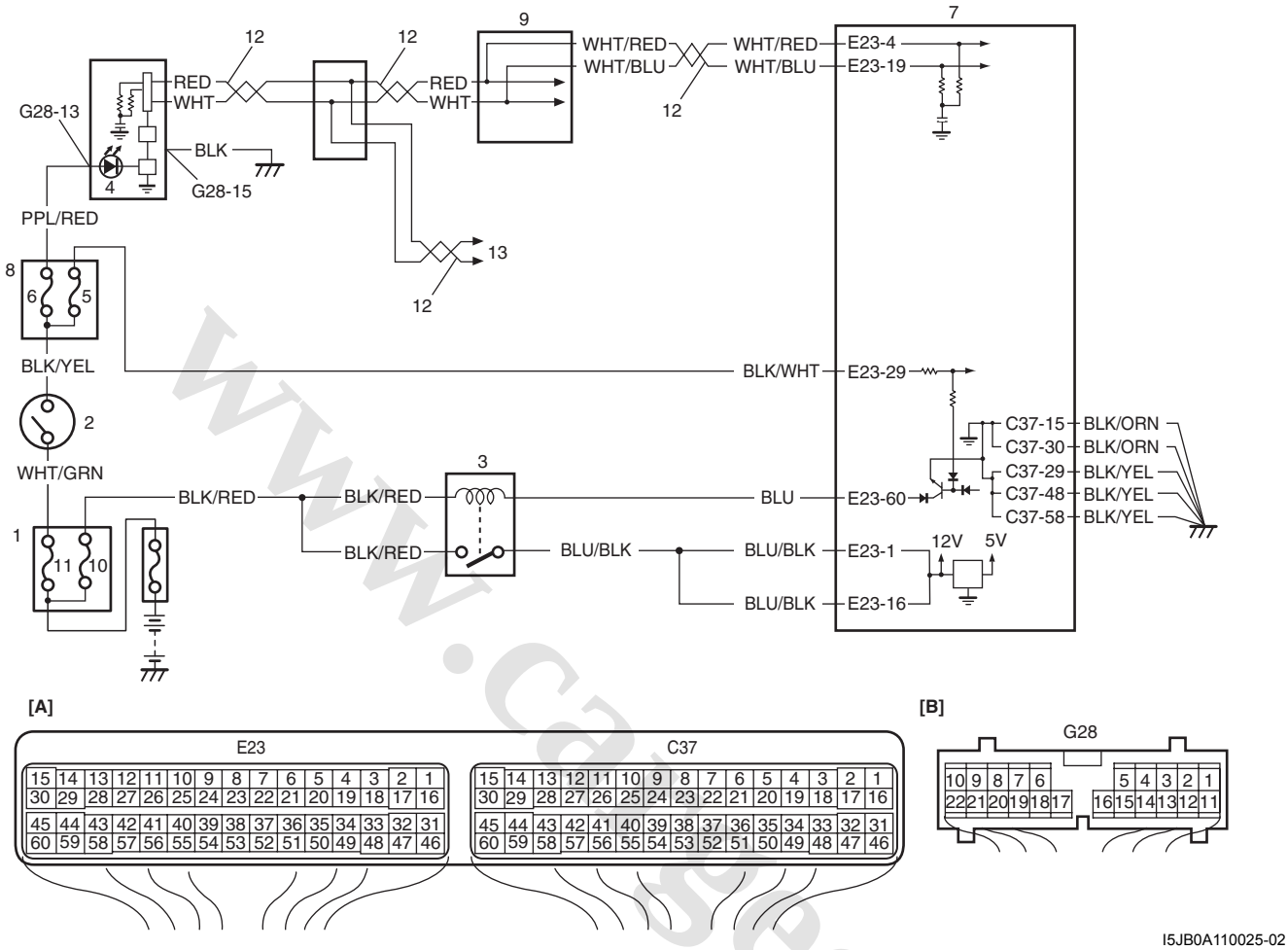


I5JB0A110025-02

| | | |
|---|---|---|
| [A]: ECM connector (viewed from harness side) | 5. "IG COIL" fuse | 11. "IGN" fuse |
| [B]: Combination meter connector (viewed from harness side) | 6. "METER" fuse | 12. CAN communication line |
| 1. Fuse box No.2 | 7. ECM | 13. To other control module (TCM (for A/T model), BCM, 4WD control module (for J20 engine) and keyless start control module (if equipped)) |
| 2. Ignition switch | 8. Junction block | |
| 3. Main relay | 9. ABS hydraulic unit / control module assembly | |
| 4. Malfunction indicator lamp in combination meter | 10. "FI" fuse | |

### Circuit Description

When the ignition switch is turned ON, ECM causes the main relay to turn ON (close the contact point). Then, ECM being supplied with the main power, transmits indication ON signal of malfunction indicator lamp (MIL) to combination meter in order to turn MIL ON. And then, combination meter turns MIL ON. When the engine starts to run and no malfunction is detected in the system, ECM transmits MIL indication OFF signal to combination meter in order to turn MIL OFF. And then, combination meter turns MIL OFF, but if a malfunction was or is detected, MIL remains ON even when the engine is running.

www.cargeek.ir

www.CarGeek.ir


**Troubleshooting**

**NOTE**

- **Before performed troubleshooting, be sure to read the "Precautions of ECM Circuit Inspection: ".**
- **When measuring circuit voltage, resistance and/or pulse signal at ECM connector, connect the special tool to ECM and/or the ECM connectors referring to "Inspection of ECM and Its Circuits: ".**

| Step | Action | Yes | No |
|---|---|---|---|
| 1 | **MIL power supply check**<br>1) Turn ignition switch to ON position.<br>*Do other warning lights come ON?* | Go to Step 2. | Go to Step 5. |
| 2 | **DTC check**<br>1) Connect scan tool to DLC with ignition switch turned OFF.<br>2) Turn ON ignition switch and check DTC.<br>*Is there DTC(s) P1674 and/or P1685?* | Go to applicable DTC diag. flow. | Go to Step 3. |
| 3 | **DTC check in ABS hydraulic unit / control module assembly**<br>1) Check DTC in ABS hydraulic unit / control module assembly.<br>*Is there DTC(s) U1073 and/or U1100?* | Go to applicable DTC diag. flow. | Go to Step 4. |
| 4 | **DTC check in BCM**<br>1) Check DTC in BCM.<br>*Is there DTC U1100?* | Go to applicable DTC diag. flow. | Substitute a known-good combination meter and recheck. If MIL still remains OFF, substitute a known-good ECM and recheck. |
| 5 | **CAN communication line circuit check**<br>1) Check CAN communication circuit between combination meter and ECM, TCM (for A/T model), ABS hydraulic unit / control module assembly, 4WD control module (for J20 engine), keyless start control module (if equipped) referring to Step 9 to 15 of "DTC P1674: CAN Communication (Bus Off Error): "<br>*Is circuit in good condition?* | Go to Step 6. | Repair or replace. |
| 6 | **"METER" fuse check**<br>1) Turn ignition switch to OFF position.<br>2) Check for fuse blown at "METER" fuse in junction block.<br>*Is "METER" fuse in good condition?* | Go to Step 7. | Replace "METER" fuse and check for short. |
| 7 | **Combination meter power supply check**<br>1) Remove combination meter referring to "Combination Meter Removal and Installation: in Section 9C".<br>2) Check for proper connection to combination meter connector at "G28-13" and "G28-15" terminals.<br>3) If OK, then turn ignition switch to ON position and measure voltage between combination meter connector at "G28-13" terminal and vehicle body ground.<br>*Is it 10 – 14 V?* | Go to Step 8. | "PPL/RED" wire is open circuit. |

www.cargeek.ir

www.CarGeek.ir

| Step | Action | Yes | No |
|---|---|---|---|
| 8 | **Combination meter circuit check**<br>1) Turn ignition switch to OFF position.<br>2) Measure resistance between “G28-15” terminal of combination meter connector and vehicle body ground.<br>*Is resistance 1 Ω or less?* | Substitute a known-good combination meter and recheck. If MIL still remains OFF, substitute a known-good ECM and recheck. | “BLK” wire is open or high resistance circuit. |

## Malfunction Indicator Lamp Remains ON after Engine Starts

S5JB0A1104012

### Wiring Diagram

Refer to “Malfunction Indicator Lamp Does Not Come ON with Ignition Switch ON and Engine Stop (but Engine Can Be Started): ”.

### Circuit Description

When the ignition switch is turned ON, ECM causes the main relay to turn ON (close the contact point). Then, ECM being supplied with the main power, transmits indication ON signal of malfunction indicator lamp (MIL) to combination meter in order to turn MIL ON. And then, combination meter turns MIL ON. When the engine starts to run and no malfunction is detected in the system, ECM transmits MIL indication OFF signal to combination meter in order to turn MIL OFF. And then, combination meter turns MIL OFF, but if a malfunction was or is detected, MIL remains ON even when the engine is running.

### Troubleshooting

**NOTE**

- **Before performed troubleshooting, be sure to read the “Precautions of ECM Circuit Inspection: ”.**
- **When measuring circuit voltage, resistance and/or pulse signal at ECM connector, connect the special tool to ECM and/or the ECM connectors referring to “Inspection of ECM and Its Circuits: ”.**

| Step | Action | Yes | No |
|---|---|---|---|
| 1 | **DTC check**<br>1) Start engine and recheck DTC of ECM and TCM (for A/T model) while engine running.<br>*Is there any DTC(s)?* | Go to Step 2 of “Engine and Emission Control System Check: ”, Step 2 of “A/T System Check: in Section 5A”. | Go to Step 2. |
| 2 | **CAN communication line circuit check**<br>1) Check CAN communication line circuit between combination meter and ECM, TCM (for A/T model), ABS hydraulic unit / control module assembly, 4WD control module (for J20 engine), keyless start control module (if equipped) referring to Step 9 to 15 “DTC P1674: CAN Communication (Bus Off Error): ”.<br>*Is circuit in good condition?* | Substitute a known-good combination meter and recheck. If MIL still remains ON, substitute a known-good ECM and recheck. | Repair or replace CAN communication circuit. |

www.cargeek.ir

www.CarGeek.ir


## DTC P0010: Camshaft Position Actuator Circuit (For M16 Engine)

S5JB0A1104013

### System and Wiring Diagram

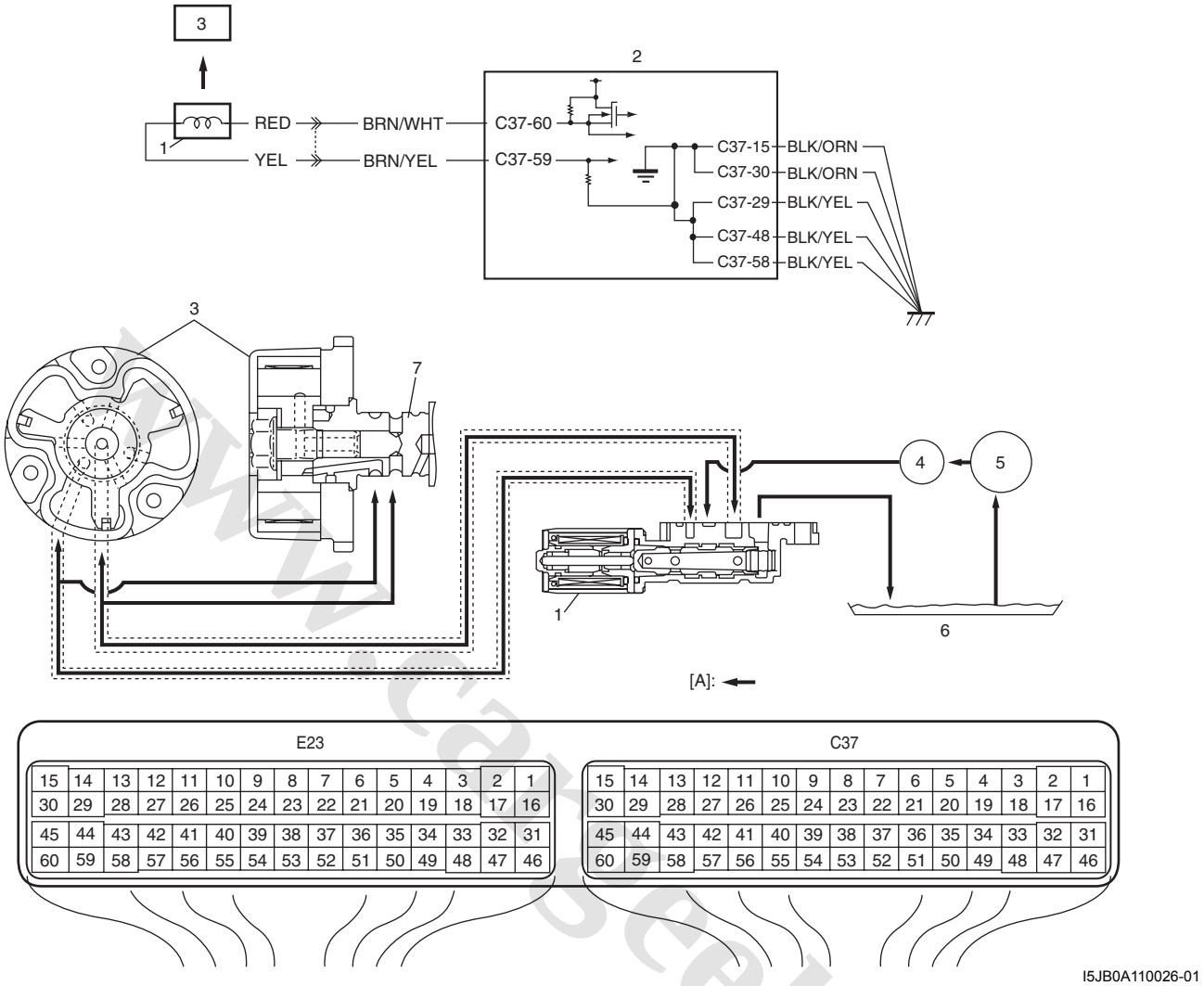


I5JB0A110026-01

| | | |
|---|---|---|
| [A]: Oil flow | 3. Camshaft timing sprocket | 6. Oil pan |
| 1. Oil control valve | 4. Oil filter | 7. Intake camshaft |
| 2. ECM | 5. Oil pump | |

### Circuit Description

Actual valve timing fails to become close to target advance level of each function although advance control function or retarded advance control function is at work.

### DTC Detecting Condition and Trouble Area

| DTC detecting condition | Trouble area |
|---|---|
| Monitor signal of oil control valve is different from command signal. (Circuit open or short)<br>(1 driving cycle detection logic) | • Oil control valve<br>• Oil control valve circuit<br>• ECM |

### DTC Confirmation Procedure

1) Clear DTC. Refer to “DTC Clearance: ”.
2) Start engine and keep it at idle for 10 seconds.
3) Check DTC. Refer to “DTC Check: ”.

www.cargeek.ir

www.CarGeek.ir

## DTC Troubleshooting

**NOTE**

**Before this trouble shooting is performed, read the precautions for DTC troubleshooting referring to "Precautions For DTC Troubleshooting: ".**

| Step | Action | Yes | No |
|---|---|---|---|
| 1 | *Was "Engine and Emission Control System Check" performed?* | Go to Step 2. | Go to "Engine and Emission Control System Check: ". |
| 2 | **Oil control valve electrical circuit check**<br>1) Disconnect connectors from ECM with ignition switch turned OFF.<br>2) Check for proper connection at "C37-60" and "C37-59" terminals of ECM connector.<br>3) If OK, measure resistance between "C37-60" and "C37-59" terminals of ECM connector.<br>*Is resistance below 10 Ω?* | Go to Step 3. | Go to Step 8. |
| 3 | **Oil control valve electrical circuit check**<br>*Was resistance more than 6.5 Ω in Step 2?* | Go to Step 4. | Go to Step 7. |
| 4 | **Oil control valve electrical circuit check for power short**<br>1) Turn ON ignition switch.<br>2) Measure voltage between "C37-60" terminal of ECM connector and engine ground.<br>*Is voltage below 1 V?* | Go to Step 5. | "RED", "BRN/WHT", "YEL" or "BRN/YEL" wire is shorted to power supply circuit. |
| 5 | **Oil control valve electrical circuit check for ground short**<br>1) Disconnect connector from oil control valve with ignition switch turned OFF.<br>2) Measure resistance between "C37-60" terminal of ECM connector and engine ground.<br>*Is resistance infinity?* | Go to Step 6. | "BRN/WHT" wire is shorted to ground circuit. |
| 6 | **Oil control valve electrical circuit check for ground short**<br>1) Measure resistance between "C37-59" terminal of ECM connector and engine ground.<br>*Is resistance infinity?* | Go to Step 9. | "BRN/YEL" wire is shorted to ground circuit. |
| 7 | **Oil control valve electrical circuit check for short**<br>1) Disconnect connector from oil control valve with ignition switch turned OFF.<br>2) Measure resistance between "C37-60" and "C37-59" terminals of ECM connector.<br>*Is resistance infinity?* | Go to Step 9. | "BRN/WHT" wire is shorted to "BRN/YEL" wire. |
| 8 | **Oil control valve electrical circuit check**<br>1) Disconnect connector from oil control valve with ignition switch turned OFF.<br>2) Measure resistance between "C37-60" terminal of ECM connector and "BRN/WHT" wire terminal of oil control valve connector and between "C37-59" terminal of ECM connector and "BRN/YEL" wire terminal of oil control valve connector.<br>*Is resistance below 1 Ω?* | Go to Step 9. | "BRN/WHT" wire or "BRN/YEL" wire circuit is open or high resistance. |

www.cargeek.ir

www.CarGeek.ir


| Step | Action | Yes | No |
|---|---|---|---|
| 9 | **Oil control valve check**<br>Check oil control valve referring to “Oil Control Valve Inspection: For M16A Engine with VVT in Section 1D”.<br><br>*Is resistance within specified value?* | Substitute a known-good ECM and recheck. | Faulty oil control valve. |

## DTC P0011 / P0012: Camshaft Position - Timing Over-Advanced or System Performance / -Retarded (For M16 Engine)

S5JB0A1104014

### System Description

Actual value of advanced valve timing does not reach target value.
Valve timing is advanced although ECM command is most retarding.

### DTC Detecting Condition and Trouble Area

| DTC detecting condition | Trouble area |
|---|---|
| Actual value of advanced valve timing does not reach target value, or valve timing is advanced although ECM command is most retarding.<br>(2 driving cycle detection logic) | • Oil control valve<br>• Oil galleries of timing sprocket<br>• Intake camshaft timing sprocket (Camshaft position control (VVT) actuator)<br>• Oil control valve circuit<br>• ECM |

### DTC Confirmation Procedure

**⚠ WARNING**

- **When performing a road test, select a place where there is no traffic or possibility of a traffic accident and be very careful during testing to avoid occurrence of an accident.**
- **Road test should be carried out by 2 persons, a driver and tester, on a level road.**

**NOTE**

**Check to make sure that the following conditions are satisfied when using this “DTC Confirmation Procedure”.**

- **altitude (barometric pressure): 2400 m, 8000 ft or less (560 mmHg, 75 kPa or more)**

1) Clear DTC. Refer to “DTC Clearance: ”.
2) Start engine and drive vehicle under usual driving condition for 5 minutes or longer until engine is warmed up to normal operating temperature.
3) Stop vehicle.
4) Run engine at idle speed for 1 minute.
5) Start vehicle and increase vehicle speed up to 80 km/h (50 mile/h).
6) Keep vehicle speed at 80 km/h (50 mile/h) for 1 minute or longer at 5th gear position.
7) Decrease vehicle speed gradually.
8) Stop vehicle and turn OFF ignition switch.
9) Repeat Step 4) to 7) one time.
10) Stop vehicle.
11) Check DTC. Refer to “DTC Check: ”.

www.cargeek.ir

www.CarGeek.ir

## DTC Troubleshooting

**NOTE**

**Before this trouble shooting is performed, read the precautions for DTC troubleshooting referring to "Precautions For DTC Troubleshooting: ".**

| Step | Action | Yes | No |
|---|---|---|---|
| 1 | *Is DTC P0010 detected together?* | Go to "DTC P0010: Camshaft Position Actuator Circuit (For M16 Engine): ". | Go to Step 2. |
| 2 | *Do you have SUZUKI scan tool?* | Go to Step 3. | Go to Step 5. |
| 3 | **Camshaft position control check**<br>1) With ignition switch turned OFF, connect SUZUKI scan tool.<br>2) Start engine and warm up to normal operating temperature.<br>3) Select menu to DATA LIST.<br>4) Check that "VVT GAP" displayed on SUZUKI scan tool is 0 – 5°.<br>*Is it OK?* | Go to Step 4. | Check valve timing referring to "Timing Chain and Chain Tensioner Removal and Installation: For M16A Engine with VVT in Section 1D". If OK, go to Step 5. |
| 4 | **Camshaft position control check**<br>1) Drive vehicle under following conditions.<br>• Vehicle speed at 80 km/h (50 mile/h).<br>• Gear position at 5th.<br>2) Check that "VVT GAP" displayed on SUZUKI scan tool is 0 – 5°.<br>*Is it OK?* | Substitute a known-good ECM and recheck. | Go to Step 5. |
| 5 | **Oil control circuit visual inspection**<br>1) Remove cylinder head cover referring to "Cylinder Head Cover Removal and Installation: For M16A Engine with VVT in Section 1D".<br>2) Check oil pressure leakage from oil control circuit.<br>*Is it in good condition?* | Go to Step 6. | Repair or replace. |
| 6 | **Oil control valve and oil gallery pipe check**<br>1) Remove oil control valve referring to "Oil Control Valve Removal and Installation: For M16A Engine with VVT in Section 1D".<br>2) Remove oil gallery pipe referring to "Timing Chain Cover Removal and Installation: For M16A Engine with VVT in Section 1D".<br>3) Check oil gallery pipe and oil control valve for clog or sludge.<br>*Are they in good condition?* | Go to Step 7. | Clean oil control valve and oil gallery pipe. Replace oil control valve if a problem is not solved after cleaning oil control valve and oil gallery pipe. |
| 7 | **Oil control valve electrical circuit check**<br>1) Check that oil control valve circuit is in good condition referring to "DTC P0010: Camshaft Position Actuator Circuit (For M16 Engine): ".<br>*Is circuit in good condition?* | Repair circuit. | Go to Step 8. |

www.cargeek.ir

www.CarGeek.ir


| Step | Action | Yes | No |
|---|---|---|---|
| 8 | **Oil control valve check**<br>1) Check oil control valve referring to “Oil Control Valve Inspection: For M16A Engine with VVT in Section 1D”.<br>*Is it in good condition?* | Replace camshaft timing sprocket. | Replace oil control valve. |

## DTC P0030: HO2S Heater Control Circuit (Sensor-1)

S5JB0A1104088

### Wiring Diagram

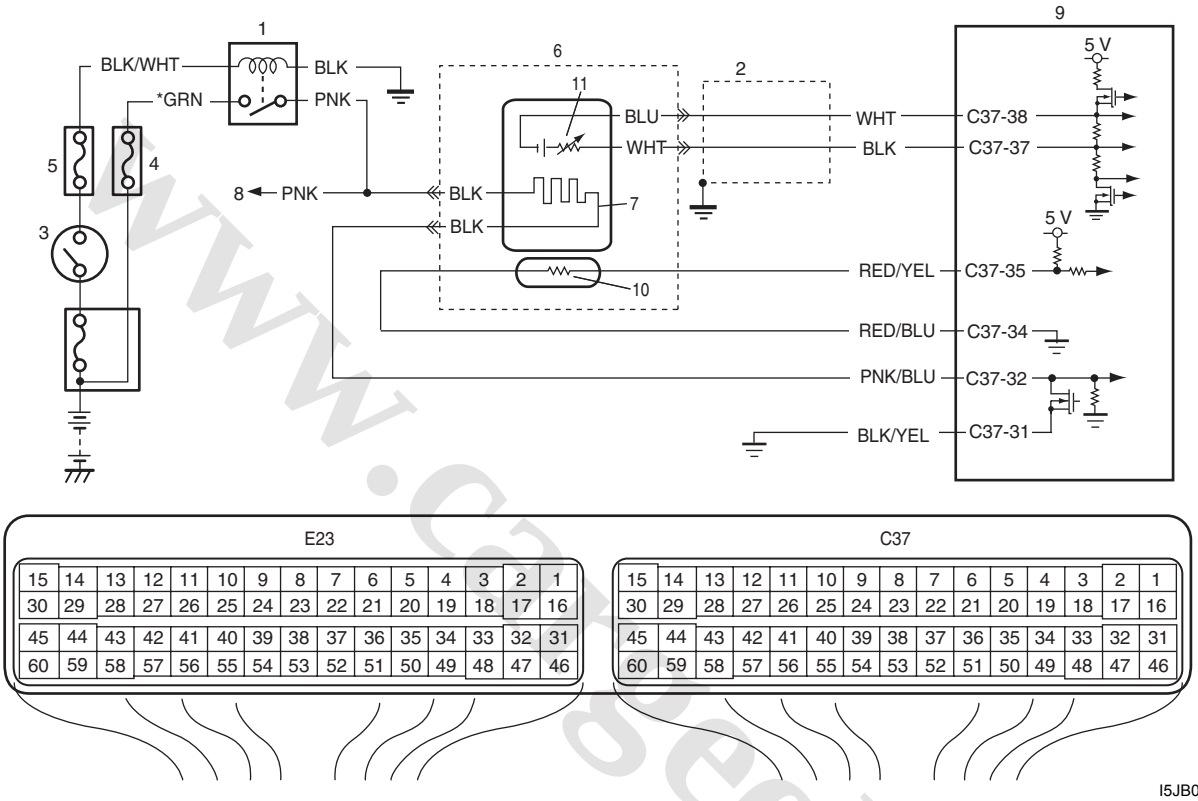


I5JB0A110027-02

| | | | |
|---|---|---|---|
| 1. HO2S heater relay | 4. “O2 HTR” fuse | 7. Heater | 10. Adjusting resistor |
| 2. Shield wire | 5. “IG COIL” fuse | 8. To HO2S-2 heater | 11. Sensor |
| 3. Ignition switch | 6. A/F sensor | 9. ECM | *: For M16 engine |

### A/F Sensor Description

Refer to “A/F Sensor Description: ”.

### DTC Detecting Condition and Trouble Area

| DTC detecting condition | Trouble area |
|---|---|
| Impedance of A/F sensor element is higher than or lower than specified range for more than 200 sec. even though A/F sensor heater is turned ON for more than specified time with engine running. (A/F sensor does not activate)<br>(2 driving cycle detection logic) | • A/F sensor heater circuit<br>• A/F sensor heater<br>• ECM |

### DTC Confirmation Procedure

1) With ignition switch turned OFF, connect scan tool.
2) Turn ON ignition switch and clear DTC using scan tool.
3) Start engine and warm up to normal operating temperature.
4) Run engine at idle speed for 4 min. or more.
5) Check DTC and pending DTC.

www.cargeek.ir

www.CarGeek.ir

### DTC Troubleshooting

**NOTE**

**Before this trouble shooting is performed, read the precautions for DTC troubleshooting referring to "Precautions For DTC Troubleshooting: ".**

| Step | Action | Yes | No |
|---|---|---|---|
| 1 | *Was "Engine and Emission Control System Check" performed?* | Go to Step 2. | Go to "Engine and Emission Control System Check: ". |
| 2 | **DTC check**<br>*Is there any DTC(s) other than P0030?* | Go to applicable DTC diag. flow. | Go to Step 3. |
| 3 | **Sensor circuit check**<br>1) Disconnect connectors from A/F sensor and ECM with ignition switch turned OFF.<br>2) Check for proper connection to A/F sensor terminals and ECM terminals.<br>3) If wire and connection are OK, measure each wire resistance of A/F sensor circuit (sensor and heater) between A/F sensor connector and ECM connector.<br>*Is each measured wire resistance lower than 1 Ω?* | Go to Step 4. | Repair or replace defective wire circuit. |
| 4 | **Sensor circuit insulation check**<br>1) Measure resistance between wire and wire at sensor circuit terminals of A/F sensor connector (no continuity check).<br>*Is measured resistance infinity?* | Substitute a known good A/F sensor and recheck. | Repair or replace defective circuit. |

## DTC P0031 / P0032: HO2S Heater Control Circuit Low / High (Sensor-1)

S5JB0A1104015

### Wiring Diagram

Refer to "DTC P0030: HO2S Heater Control Circuit (Sensor-1): ".

### A/F Sensor Description

Refer to "A/F Sensor Description: ".

### DTC Detecting Condition and Trouble Area

| DTC detecting condition | Trouble area |
|---|---|
| **P0031:**<br>Heater control circuit voltage of A/F sensor is lower than specification for more than specified time continuously even though control duty ratio of A/F sensor heater is less than 90% with engine running. (Heater control duty pulse is not detected in its circuit of ECM)<br>(2 driving cycle detection logic)<br>**P0032:**<br>Heater control circuit voltage of A/F sensor is higher than specification for more than specified time continuously even though control duty ratio of A/F sensor heater is more than 10% with engine running. (Heater control duty pulse is not detected in its circuit of ECM)<br>(2 driving cycle detection logic) | • A/F sensor heater circuit<br>• A/F sensor heater<br>• ECM |

www.cargeek.ir

www.CarGeek.ir


**DTC Confirmation Procedure**

1) With ignition switch turned OFF, connect scan tool.
2) Turn ON ignition switch and clear DTC using scan tool.
3) Start engine and warm up to normal operating temperature.
4) Run engine at idle speed for 1 min. or more.
5) Check DTC and pending DTC.

**DTC Troubleshooting**

**NOTE**

**Before this trouble shooting is performed, read the precautions for DTC troubleshooting referring to "Precautions For DTC Troubleshooting: ".**

| Step | Action | Yes | No |
|---|---|---|---|
| 1 | *Was "Engine and Emission Control System Check" performed?* | Go to Step 2. | Go to "Engine and Emission Control System Check: ". |
| 2 | **A/F sensor heater circuit check**<br>1) Disconnect connector from A/F sensor with ignition switch turned OFF.<br>2) Check for proper connection to A/F sensor connector.<br>3) If connection are OK, measure voltage between heater power terminal of A/F sensor connector and vehicle body ground with ignition switch turned ON.<br>*Is measured voltage 10 – 14 V?* | Go to Step 9. | Go to Step 3. |
| 3 | **HO2S heater fuse check**<br>1) Check for "O2 HTR" fuse (1) blown.<br>**For J20 engine**<br> 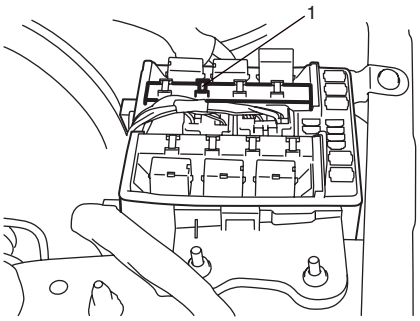 <br>I5JB0A110028-02<br>**For M16 engine**<br> 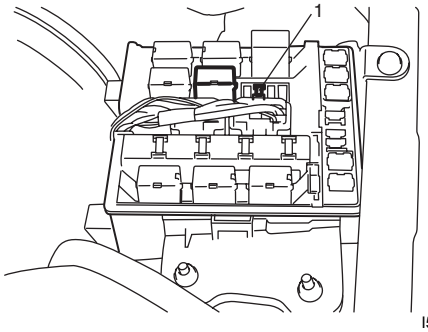 <br>I5JB0A110029-02<br>*Is "O2 HTR" fuse in good condition?* | Go to Step 5. | Go to Step 4. |

www.cargeek.ir

www.CarGeek.ir

| Step | Action | Yes | No |
|---|---|---|---|
| 4 | **A/F sensor and HO2S heater resistance check**<br>1) Disconnect connector from HO2S-2 with ignition switch turned OFF.<br>2) Check heater resistance of A/F sensor and HO2S referring to “Air Fuel Ratio (A/F) Sensor On-Vehicle Inspection: in Section 1C” and “Heated Oxygen Sensor (HO2S-2) Heater On-Vehicle Inspection: in Section 1C”.<br>*Are A/F sensor heater and HO2S heater in good condition?* | Go to Step 6. | Replace defective sensor. |
| 5 | **HO2S heater relay power circuit check**<br>1) Remove integration relay No.2 (for J20 engine) (1) or HO2S heater relay (for M16 engine) (2) with ignition switch turned OFF.<br>2) Check for proper connection to relay connector.<br>3) If connection are OK, measure voltage between each relay power terminal of relay connector and vehicle body ground with ignition switch tuned ON.<br>**For J20 engine**<br> 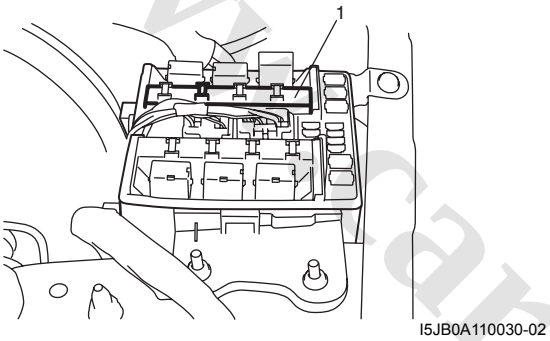 <br><br>I5JB0A110030-02<br>**For M16 engine**<br> 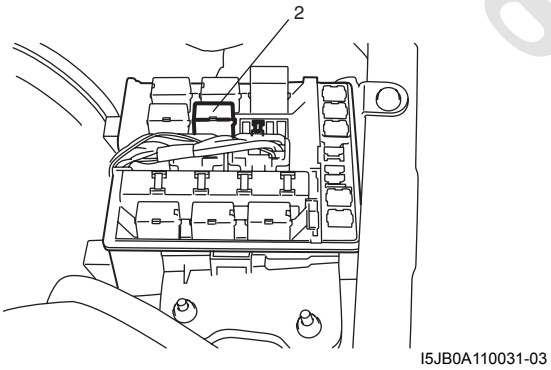 <br><br>I5JB0A110031-03<br>*Is each measured voltage 10 – 14 V?* | Go to Step 6. | Power circuit is open. |
| 6 | **Check HO2S heater relay**<br>1) Check integration relay No.2 (for J20 engine) or HO2S heater relay (for M16 engine) referring to “Control Relay Inspection: in Section 1C”.<br>*Is it in good condition?* | Go to Step 7. | Replace relay. |
| 7 | **A/F sensor heater circuit check**<br>1) Measure insulation resistance between heater terminals of A/F sensor connector.<br>*Is measured resistance infinity?* | Go to Step 8. | Repair or replace short wire. |

www.cargeek.ir

www.CarGeek.ir


| Step | Action | Yes | No |
|---|---|---|---|
| 8 | **HO2S heater relay circuit check**<br>1) Measure wire resistance between coil ground terminal of relay connector and vehicle body ground.<br>*Is measured resistance lower than 1 Ω?* | Output wire of relay connector is open or short to ground. | Repair or replace defective circuit. |
| 9 | **A/F sensor heater check**<br>1) Check heater resistance of A/F sensor referring to “Air Fuel Ratio (A/F) Sensor On-Vehicle Inspection: in Section 1C”.<br>*Is A/F sensor heater in good condition?* | Go to Step 10. | Replace A/F sensor. |
| 10 | **A/F sensor heater control circuit check**<br>1) Disconnect connector from ECM with ignition switch turned OFF.<br>2) Check for proper connection of A/F sensor heater circuit terminal to ECM connector.<br>3) If connection are OK, measure each wire resistance of sensor heater control circuit at ECM connector between ECM to A/F sensor and ECM to vehicle body ground.<br>*Is each measured wire resistance lower than 1 Ω?* | Go to Step 11. | Repair or replace defective wire circuit. |
| 11 | **A/F sensor heater circuit check**<br>1) Measure insulation resistance between control terminal of A/F sensor heater and ground terminal of A/F sensor heater at ECM connector.<br>*Is measured resistance infinity?* | Substitute a known good ECM and recheck. | Repair or replace short wire. |

www.cargeek.ir

www.cargeek.ir

www.CarGeek.ir

## DTC P0037 / P0038: HO2S Heater Control Circuit Low / High (Sensor-2)

S5JB0A1104016

### Wiring Diagram

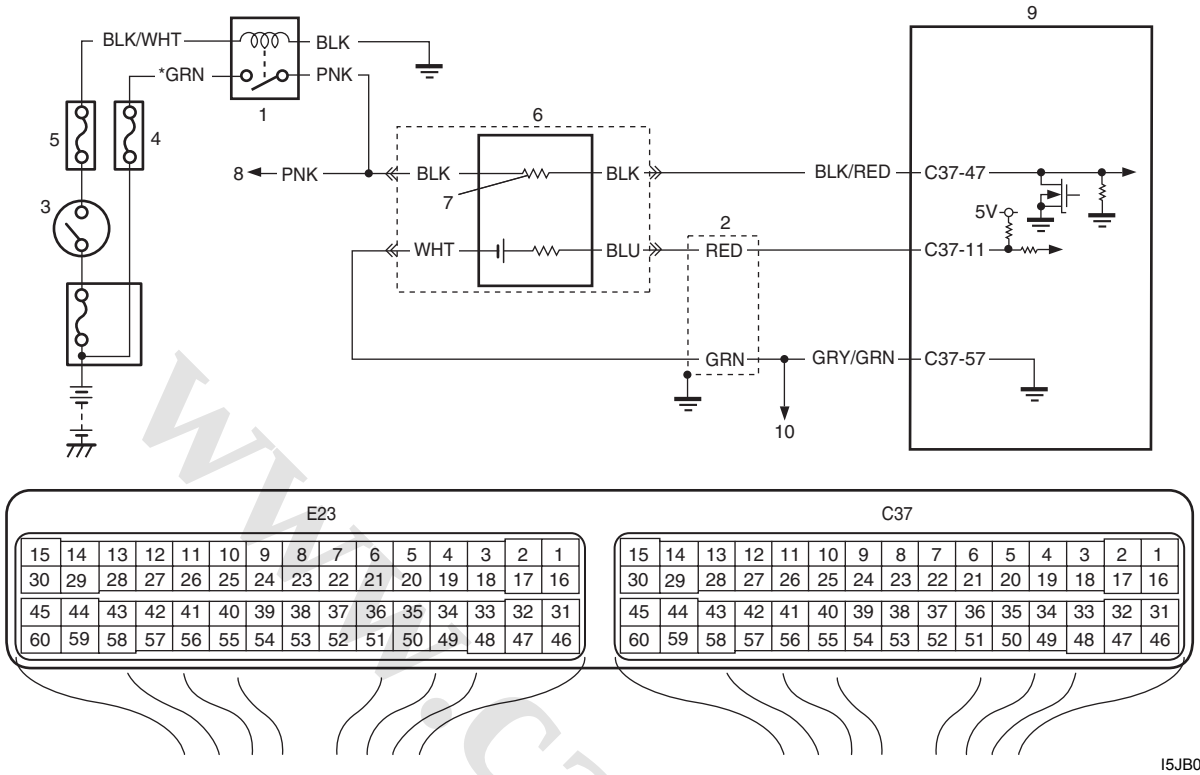


I5JB0A110032-01

| | | | |
|---|---|---|---|
| 1. HO2S heater relay | 4. "O2 HTR" fuse | 7. Heater | 10. To other sensors |
| 2. Shield wire | 5. "IG COIL" fuse | 8. To A/F sensor heater | *: For M16 engine |
| 3. Ignition switch | 6. HO2S-2 | 9. ECM | |

### DTC Detecting Condition and Trouble Area

| DTC detecting condition | Trouble area |
|---|---|
| **P0037:**<br>HO2S-2 circuit voltage is lower than specification for more than specified time continuously even though control duty ratio of HO2S-2 heater is less than 75% with engine running. (Heater control duty pulse is not detected in its monitor signal)<br>(2 driving cycle detection logic)<br>**P0038:**<br>HO2S-2 circuit voltage is higher than specification for more than specified time continuously even though control duty ratio of HO2S-2 heater is more than 25% with engine running. (Heater control duty pulse is not detected in its monitor signal)<br>(2 driving cycle detection logic) | • HO2S-2 heater<br>• HO2S-2 heater circuit<br>• ECM |

### DTC Confirmation Procedure

1) With ignition switch turned OFF, connect scan tool.
2) Turn ON ignition switch and clear DTC using scan tool.
3) Start engine and warm up to normal operating temperature.
4) Run engine at idle speed for 1 min.
5) Check DTC and pending DTC.

www.cargeek.ir

www.CarGeek.ir


## DTC Troubleshooting

**NOTE**

**Before this trouble shooting is performed, read the precautions for DTC troubleshooting referring to "Precautions For DTC Troubleshooting: ".**

| Step | Action | Yes | No |
|---|---|---|---|
| 1 | *Was "Engine and Emission Control System Check" performed?* | Go to Step 2. | Go to "Engine and Emission Control System Check: ". |
| 2 | **HO2S-2 heater circuit check**<br>1) Disconnect connector from HO2S-2 with ignition switch turned OFF.<br>2) Check for proper connection to HO2S-2 connector.<br>3) If connection are OK, measure voltage between heater power terminal of HO2S-2 connector and vehicle body ground with ignition switch turned ON.<br>*Is measured voltage 10 – 14 V?* | Go to Step 9. | Go to Step 3. |
| 3 | **HO2S heater fuse check**<br>1) Check for "O2 HTR" fuse (1) blown.<br>**For J20 engine**<br> 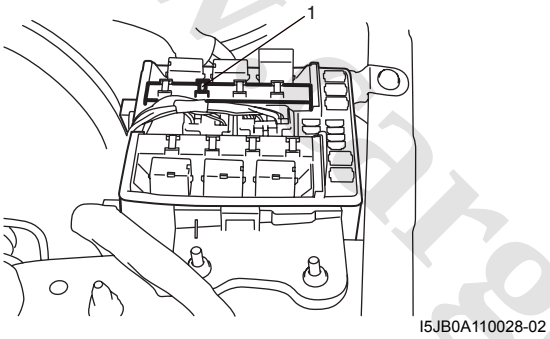 <br><br>I5JB0A110028-02<br>**For M16 engine**<br> 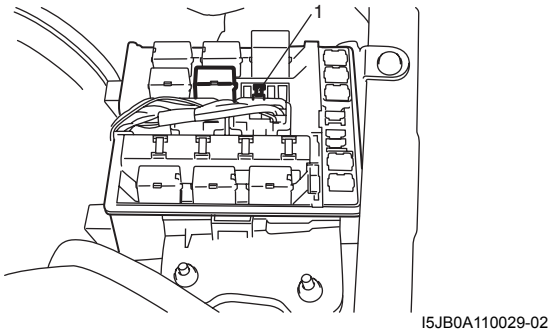 <br><br>I5JB0A110029-02<br>*Is "O2 HTR" fuse in good condition?* | Go to Step 5. | Go to Step 4. |
| 4 | **A/F sensor and HO2S heater resistance check**<br>1) Disconnect connector from A/F sensor with ignition switch turned OFF.<br>2) Check heater resistance of A/F sensor and HO2S referring to "Air Fuel Ratio (A/F) Sensor On-Vehicle Inspection: in Section 1C" and "Heated Oxygen Sensor (HO2S-2) Heater On-Vehicle Inspection: in Section 1C".<br>*Are A/F sensor heater and HO2S heater in good condition?* | Go to Step 6. | Replace defective sensor. |

www.cargeek.ir

www.CarGeek.ir

| Step | Action | Yes | No |
|---|---|---|---|
| 5 | **HO2S heater relay power circuit check**<br>1) Remove integration relay No.2 (for J20 engine) (1) or HO2S heater relay (for M16 engine) (2) with ignition switch turned OFF.<br>2) Check for proper connection to relay connector.<br>3) If connection are OK, measure voltage between each relay power terminal of relay connector and vehicle body ground with ignition switch tuned ON.<br>**For J20 engine**<br> 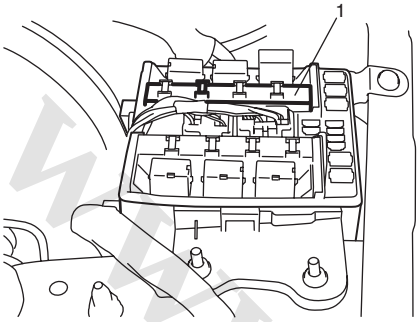 <br><br>I5JB0A110030-02<br>**For M16 engine**<br> 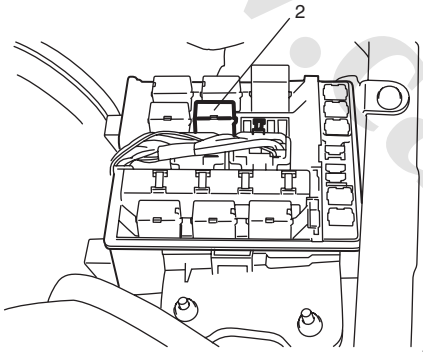 <br><br>I5JB0A110031-03<br>*Is each measured voltage 10 – 14 V?* | Go to Step 6. | Power circuit is open. |
| 6 | **Check HO2S heater relay**<br>1) Check integration relay No.2 (for J20 engine) or HO2S heater relay (for M16 engine) referring to “Control Relay Inspection: in Section 1C”.<br>*Is it in good condition?* | Go to Step 7. | Replace relay. |
| 7 | **HO2S-2 heater circuit check**<br>1) Measure insulation resistance between heater terminals of HO2S-2 connector.<br>*Is measured resistance infinity?* | Go to Step 8. | Repair or replace short wire. |
| 8 | **HO2S heater relay circuit check**<br>1) Measure wire resistance between coil ground terminal of relay connector and vehicle body ground.<br>*Is measured resistance lower than 1 Ω?* | Output wire of relay connector is open or short to ground. | Repair or replace defective circuit. |
| 9 | **HO2S-2 heater check**<br>1) Check heater resistance of HO2S-2 referring to “Heated Oxygen Sensor (HO2S-2) Heater On-Vehicle Inspection: in Section 1C”.<br>*Is HO2S-2 heater in good condition?* | Go to Step 10. | Replace HO2S-2. |

www.cargeek.ir

www.CarGeek.ir


| Step | Action | Yes | No |
|---|---|---|---|
| 10 | **HO2S heater control circuit check**<br>1) Disconnect connector from ECM with ignition switch turned OFF.<br>2) Check for proper connection of HO2S-2 heater circuit terminal to ECM connector.<br>3) If connection are OK, measure wire resistance of sensor heater control circuit at ECM connector between ECM to HO2S-2.<br>*Is measured wire resistance lower than 1 Ω?* | Go to Step 11. | Repair or replace defective wire circuit. |
| 11 | **HO2S-2 heater circuit check**<br>1) Measure insulation resistance between control terminal of HO2S-2 heater at ECM connector and vehicle body ground.<br>*Is measured resistance infinity?* | Substitute a known good ECM and recheck. | Repair or replace short wire. |

## DTC P0101: Mass Air Flow Circuit Range / Performance

S5JB0A1104017

### Wiring Diagram

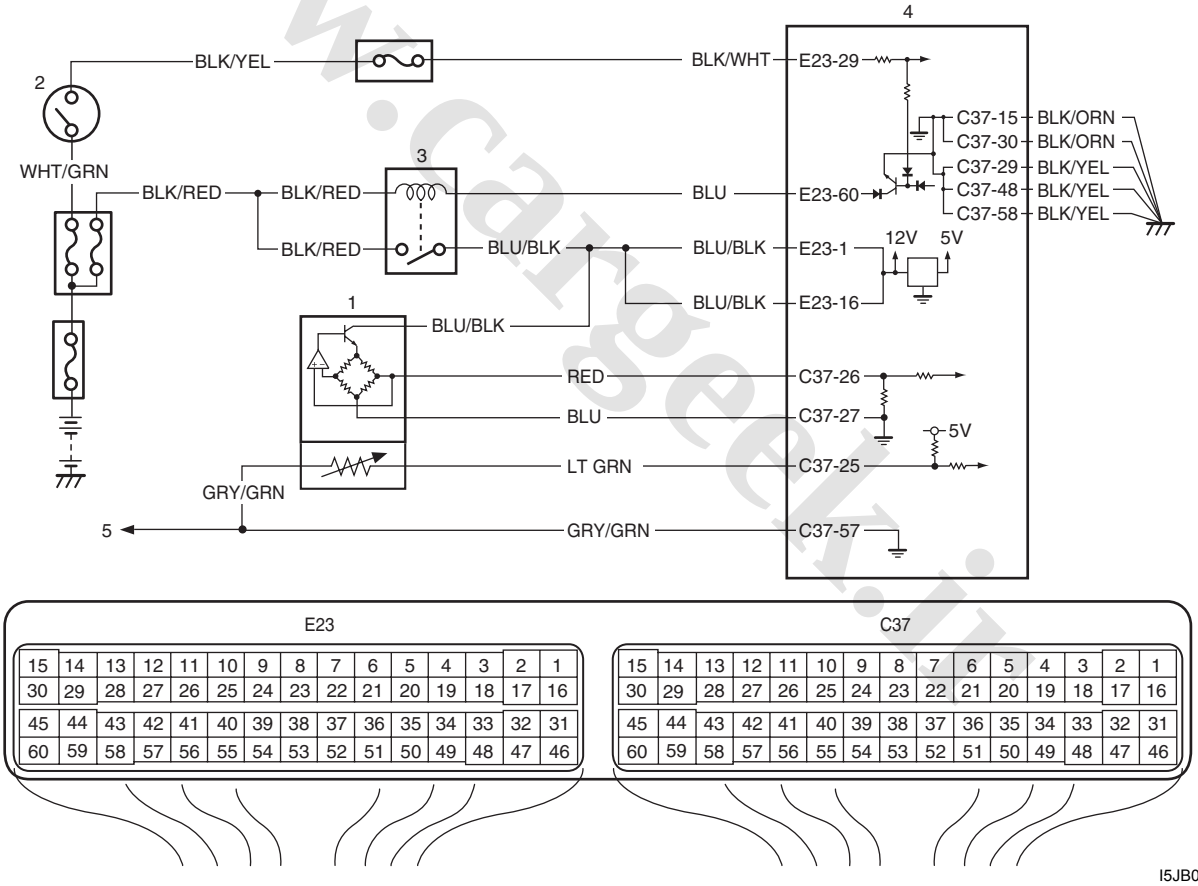


I5JB0A110033-01

| | | |
|---|---|---|
| 1. MAF and IAT sensor | 3. Main relay | 5. To other sensors |
| 2. Ignition switch | 4. ECM | |

www.cargeek.ir

www.CarGeek.ir

**DTC Detecting Condition and Trouble Area**

| DTC detecting condition | Trouble area |
|---|---|
| • MAF volume is greater than 25 g/sec even if engine revolution is less than 900 rpm and intake manifold pressure is less than 45 kPa (6.35 psi) with TP less than 3.0°.<br>• MAF volume is lower than 4 g/sec even if engine revolution is more than 2500 rpm and intake manifold pressure is more than 50 kPa (7.25 psi) with TP more than 15°.<br>(2 driving cycle detection logic) | • Air intake system (clog or leakage)<br>• MAF sensor circuit<br>• MAF sensor<br>• TP sensor and/or its circuit<br>• MAP sensor and/or its circuit<br>• ECM |

**DTC Confirmation Procedure**

**⚠ WARNING**

- **When performing a road test, select a place where there is no traffic or possibility of a traffic accident and be very careful during testing to avoid occurrence of an accident.**
- **Road test should be carried out by 2 persons, a driver and a tester, on a level road.**

**NOTE**

**Check to make sure that the following conditions are satisfied when using this "DTC Confirmation Procedure".**

- **Intake air temperature at engine start: –10 °C (14°F) to 80 °C (176 °F)**
- **Intake air temperature: –10 °C (14 °F) to 70 °C (158 °F)**
- **Engine coolant temperature: 70 °C (158 °F) to 150 °C (302 °F)**
- **Altitude (barometric pressure): 2400 m, 8000 ft or less (560 mmHg, 75 kPa or more)**

1) With ignition switch turned OFF, connect scan tool.
2) Turn ON ignition switch and clear DTC using scan tool.
3) Start engine and warm up to normal operating temperature. (ECT approx. 90 – 95 °C, 194 – 203 °F)
4) Drive vehicle with engine speed: more than 2500 rpm for 1 min.
5) Increase vehicle speed to 80 km/h (45 mile/h) at 5th gear or D range.
6) Release accelerator pedal to decrease vehicle speed to 40 km/h (25 mile/h).
7) Stop vehicle and run it idle for 1 min.
8) Check DTC and pending DTC.

**DTC Troubleshooting**

**NOTE**

**Before this trouble shooting is performed, read the precautions for DTC troubleshooting referring to "Precautions For DTC Troubleshooting: ".**

| Step | Action | Yes | No |
|---|---|---|---|
| 1 | *Was "Engine and Emission Control System Check" performed?* | Go to Step 2. | Go to "Engine and Emission Control System Check: ". |
| 2 | **Visual inspection**<br>Check MAF sensor and air intake system for:<br>• Objects which block measuring duct and resistor of MAF sensor.<br>• Other air flow which does not pass the MAF sensor.<br>*Are they in good condition?* | Go to Step 3. | Repair or replace. |

www.cargeek.ir

www.CarGeek.ir


| Step | Action | Yes | No |
|---|---|---|---|
| 3 | **MAF sensor and its circuit check**<br>1) With ignition switch turned OFF, connect scan tool to DLC.<br>2) Start engine and warm up to normal operation temperature.<br>3) Check MAF value using scan tool. (Refer to “Scan Tool Data: ” for normal value.)<br>*Is each value within specified range?* | Go to Step 11. | Go to Step 4. |
| 4 | **MAF sensor output voltage check**<br>1) Turn OFF ignition switch.<br>2) Remove ECM from its bracket with ECM connectors connected.<br>3) Measure voltage between “C37-26” and “C37-27” terminals of ECM connector referring to “Mass Air Flow (MAF) and Intake Air Temperature (IAT) Sensor On-Vehicle Inspection: in Section 1C”.<br>*Is each value within specified range?* | Poor “C37-26” and/or “C37-27” terminal connection.<br>If OK, substitute a known-good ECM and recheck. | Go to Step 5. |
| 5 | **MAF sensor power supply voltage check**<br>1) Disconnect connector from MAF and IAT sensor with ignition switch turned OFF.<br>2) Turn ON ignition switch, measure voltage between engine ground and “BLU/BLK” wire terminal (2) of MAF and IAT sensor connector (1).<br> 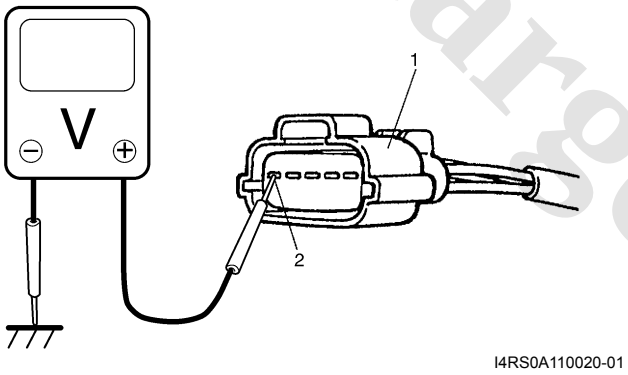 <br><br>*Is voltage 10 – 14 V?* | Go to Step 6. | “BLU/BLK” wire is open circuit. |
| 6 | **MAF sensor ground circuit check**<br>1) Turn OFF ignition switch, measure resistance between “BLU” wire terminal of MAF and IAT sensor connector and engine ground.<br>*Is resistance below 5 Ω?* | Go to Step 8. | Go to Step 7. |
| 7 | **Ground circuit check**<br>1) Measure resistance between “C37-27” terminal of ECM connector and vehicle body ground.<br>*Is resistance below 5 Ω?* | “BLU” wire is open or high resistance circuit. | ECM grounds “C37-58”, “C37-48”, “C37-30”, “C37-29” and/or “C37-15” circuit is open or high resistance.<br>If wires are OK, substitute a known-good ECM and recheck. |

www.cargeek.ir

www.CarGeek.ir

| Step | Action | Yes | No |
|---|---|---|---|
| 8 | **MAF sensor signal circuit check**<br>1) Disconnect connectors from ECM with ignition switch turned OFF.<br>2) Turn ON ignition switch, measure voltage between “RED” wire terminal of MAF and IAT sensor connector and engine ground.<br>*Is voltage 0 V?* | Go to Step 9. | “RED” wire is shorted to others circuit. |
| 9 | **MAF sensor signal circuit check**<br>1) Turn OFF ignition switch, measure resistance between “RED” wire terminal of MAF and IAT sensor connector and engine ground.<br>*Is resistance infinity?* | Go to Step 10. | “RED” wire is shorted to ground circuit. |
| 10 | **MAF sensor signal circuit check**<br>1) Measure resistance between “RED” wire terminal of MAF and IAT sensor connector and “C37-26” terminal of ECM connector.<br>*Is resistance below 3 Ω?* | Faulty MAF and IAT sensor. | “RED” wire is open or high resistance circuit. |
| 11 | *Is DTC P2135 detected?* | Go to “DTC P2135: Throttle Position Sensor (Main / Sub) Voltage Correlation: ”. | Go to Step 12. |
| 12 | *Is DTC P0106 displayed?* | Go to “DTC P0106: Manifold Absolute Pressure Range / Performance: ”. | Substitute a known-good ECM and recheck. |

## DTC P0102: Mass Air Flow Circuit Low Input

S5JB0A1104018

### Wiring Diagram

Refer to “DTC P0101: Mass Air Flow Circuit Range / Performance: ”.

### DTC Detecting Condition and Trouble Area

| DTC detecting condition | Trouble area |
|---|---|
| DTC will be set when all of following conditions are detected for 0.5 seconds continuously.<br>• Engine is running<br>• Voltage of MAF sensor output is less than specified value for specified time continuously.<br>(1 driving cycle detection logic) | • Open or short in MAF sensor circuit<br>• MAF sensor<br>• ECM |

### DTC Confirmation Procedure

1) With ignition switch turned OFF, connect scan tool.
2) Turn ON ignition switch and clear DTC using scan tool.
3) Start engine and run it for 10 sec.
4) Check DTC and pending DTC.

www.cargeek.ir

www.CarGeek.ir


## DTC Troubleshooting

**NOTE**

**Before this trouble shooting is performed, read the precautions for DTC troubleshooting referring to "Precautions For DTC Troubleshooting: ".**

| Step | Action | Yes | No |
|---|---|---|---|
| 1 | *Was "Engine and Emission Control System Check" performed?* | Go to Step 2. | Go to "Engine and Emission Control System Check: ". |
| 2 | **MAF sensor and its circuit check**<br>1) Connect scan tool to DLC with ignition switch turned OFF.<br>2) Start engine and check MAF value displayed on scan tool. (Refer to "Scan Tool Data: " for normal value.)<br>*Is normal value indicated?* | Intermittent trouble. Check for intermittent referring to "Intermittent and Poor Connection Inspection: in Section 00". | Go to Step 3. |
| 3 | **MAF sensor power supply voltage check**<br>1) Disconnect connector from MAF and IAT sensor with ignition switch turned OFF.<br>2) Turn ON ignition switch, measure voltage between engine ground and "BLU/BLK" wire terminal of MAF and IAT sensor connector.<br>*Is voltage 10 – 14 V?* | Go to Step 4. | "BLU/BLK" wire is open circuit. |
| 4 | **MAF sensor ground circuit check**<br>1) Turn OFF ignition switch, measure resistance between "BLU" wire terminal of MAF and IAT sensor connector and engine ground.<br>*Is resistance below 3 Ω?* | Go to Step 6. | Go to Step 5. |
| 5 | **Ground circuit check**<br>1) Remove ECM from its bracket with ECM connectors connected.<br>2) Measure resistance between "C37-27" terminal of ECM connector and engine ground.<br>*Is resistance below 3 Ω?* | "BLU" wire is open or high resistance circuit. | ECM grounds "C37-58", "C37-48", "C37-30", "C37-29" and/or "C37-15" circuit is open or high resistance.<br>If wires are OK, substitute a known-good ECM and recheck. |
| 6 | **MAF sensor signal circuit check**<br>1) Disconnect connectors from ECM with ignition switch turned OFF.<br>2) Measure voltage between "RED" wire terminal of MAF and IAT sensor connector and engine ground with ignition switch turned ON.<br>*Is voltage 0 V?* | Go to Step 7. | "RED" wire is shorted to other circuit. |
| 7 | **MAF sensor signal circuit check**<br>1) Measure resistance between "RED" wire terminal of MAF and IAT sensor connector and engine ground with ignition switch turned OFF.<br>*Is resistance infinity?* | Go to Step 8. | "RED" wire is shorted to ground circuit. |
| 8 | **MAF sensor signal circuit check**<br>1) Measure resistance between "RED" wire terminal of MAF and IAT sensor connector and "C37-26" terminal of ECM connector.<br>*Is resistance below 3 Ω?* | Go to Step 9. | "RED" wire is open or high resistance circuit. |

www.cargeek.ir

www.CarGeek.ir

| Step | Action | Yes | No |
|---|---|---|---|
| 9 | **MAF sensor output signal check**<br>1) Connect connectors to MAF and IAT sensor and ECM with ignition switch turned OFF.<br>2) Measure voltage between “C37-26” and “C37-27” terminals of ECM connector referring to “Mass Air Flow (MAF) and Intake Air Temperature (IAT) Sensor On-Vehicle Inspection: in Section 1C”.<br>*Is each value within specified range?* | Substitute a known-good ECM and recheck. | Faulty MAF and IAT sensor. |

## DTC P0103: Mass Air Flow Circuit High Input

S5JB0A1104019

### Wiring Diagram

Refer to “DTC P0101: Mass Air Flow Circuit Range / Performance: ”.

### DTC Detecting Condition and Trouble Area

| DTC detecting condition | Trouble area |
|---|---|
| DTC will be set when all of following conditions are detected for 0.5 seconds continuously.<br>• Engine is running<br>• Voltage of MAF sensor output is more than specified value for specified time continuously.<br>(1 driving cycle detection logic) | • Open or short in MAF sensor circuit<br>• MAF sensor<br>• ECM |

### DTC Confirmation Procedure

1) With ignition switch turned OFF, connect scan tool.
2) Turn ON ignition switch and clear DTC using scan tool.
3) Start engine and run it for 10 sec.
4) Check DTC and pending DTC.

www.cargeek.ir

www.CarGeek.ir


## DTC Troubleshooting

**NOTE**

**Before this trouble shooting is performed, read the precautions for DTC troubleshooting referring to "Precautions For DTC Troubleshooting: ".**

| Step | Action | Yes | No |
|---|---|---|---|
| 1 | *Was "Engine and Emission Control System Check" performed?* | Go to Step 2. | Go to "Engine and Emission Control System Check: ". |
| 2 | **MAF sensor and its circuit check**<br>1) Connect scan tool to DLC with ignition switch turned OFF.<br>2) Start engine and check MAF value displayed on scan tool. (Refer to "Scan Tool Data: " for normal value.)<br>*Is normal value indicated?* | Intermittent trouble.<br>Check for intermittent referring to "Intermittent and Poor Connection Inspection: in Section 00". | Go to Step 3. |
| 3 | **MAF sensor power supply voltage check**<br>1) Disconnect connector from MAF and IAT sensor with ignition switch tuned OFF.<br>2) Turn ON ignition switch, measure voltage between engine ground and "BLU/BLK" wire terminal of MAF and IAT sensor connector.<br>*Is voltage 10 – 14 V?* | Go to Step 4. | "BLU/BLK" wire is open circuit. |
| 4 | **MAF sensor ground circuit check**<br>1) Turn OFF ignition switch, measure resistance between "BLU" wire terminal of MAF and IAT sensor connector and engine ground.<br>*Is resistance below 5 Ω?* | Go to Step 6. | Go to Step 5. |
| 5 | **Ground circuit check**<br>1) Remove ECM from its bracket with ECM connectors connected.<br>2) Measure resistance between "C37-27" terminal of ECM connector and engine ground.<br>*Is resistance below 5 Ω?* | "BLU" wire is open or high resistance circuit. | ECM grounds "C37-58", "C37-48", "C37-30", "C37-29" and/or "C37-15" circuit are open or high resistance.<br>If wires are OK, substitute a known-good ECM and recheck. |
| 6 | **MAF sensor signal circuit check**<br>1) Disconnect connectors from ECM with ignition switch turned OFF.<br>2) Measure voltage between "RED" wire terminal of MAF and IAT sensor connector and engine ground.<br>*Is voltage 0 V?* | Go to Step 7. | "RED" wire is shorted to other circuit. |
| 7 | **MAF sensor output signal check**<br>1) Connect connector to MAF and IAT sensor and ECM with ignition switch turned OFF.<br>2) Measure voltage between "C37-26" and "C37-27" terminal of ECM connector referring to "Mass Air Flow (MAF) and Intake Air Temperature (IAT) Sensor On-Vehicle Inspection: in Section 1C".<br>*Is each value within specified range?* | Substitute a known-good ECM and recheck. | Faulty MAF and IAT sensor. |

www.cargeek.ir

www.CarGeek.ir

## DTC P0106: Manifold Absolute Pressure Range / Performance

S5JB0A1104020

### Wiring Diagram

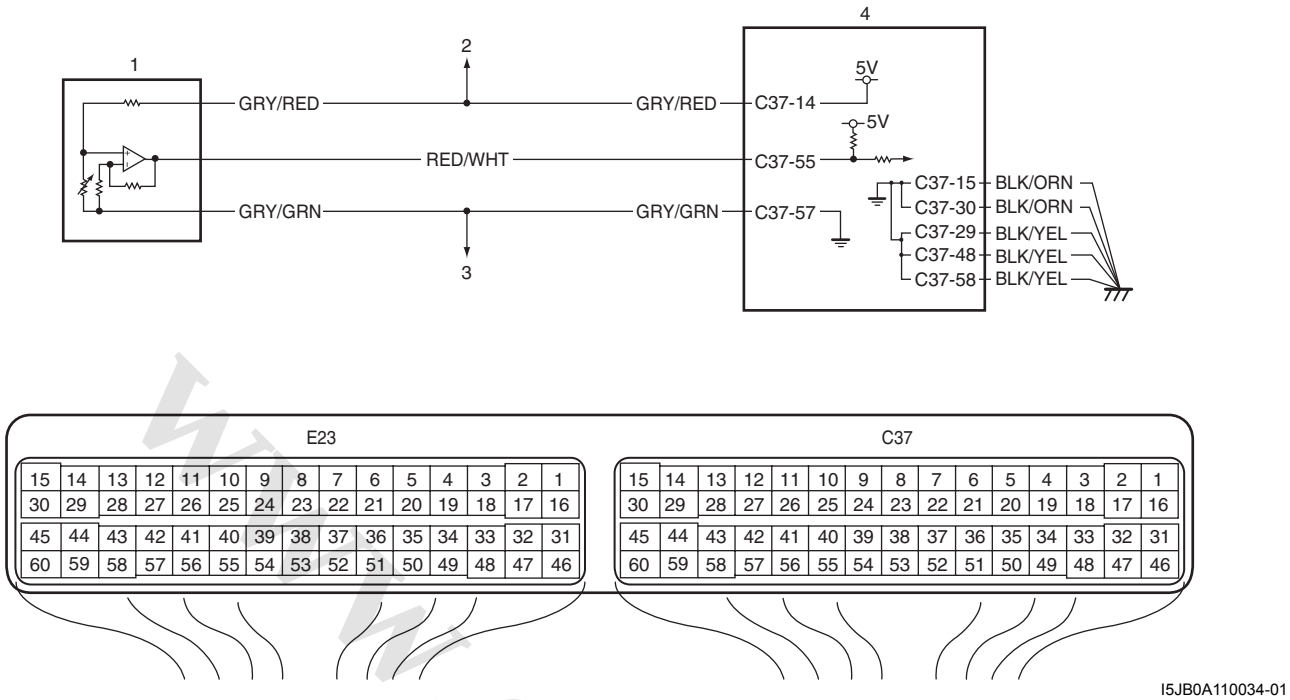


I5JB0A110034-01

| | |
|---|---|
| 1. Manifold absolute pressure sensor | 3. To other sensors |
| 2. To electric load current sensor (for J20 engine) and A/C refrigerant pressure sensor (if equipped with A/C) | 4. ECM |

### DTC Detecting Condition and Trouble Area

| DTC detecting condition | Trouble area |
|---|---|
| • Difference between Max. manifold absolute pressure value and Min. manifold pressure value is less than 1.3 kPa (0.19 psi) when engine running at idle speed.<br>• Difference between barometric pressure value and manifold pressure value is less than 33.3 kPa (4.83 psi) for 5 sec. at 2000 r/min. or more.<br>(2 driving cycle detection logic) | • Manifold absolute pressure sensor<br>• Manifold absolute pressure sensor vacuum passage<br>• Air intake system<br>• ECM |

### DTC Confirmation Procedure

**NOTE**

**Check to make sure that the following conditions are satisfied when using this "DTC Confirmation Procedure".**

- **Intake air temperature at engine start: –10 °C (14 °F) to 80 °C (176 °F)**
- **Intake air temperature: –10 °C (14 °F) to 70 °C (158 °F)**
- **Engine coolant temperature: 70 °C (158 °F) to 150 °C (302 °F)**
- **Altitude (barometric pressure): 2400 m, 8000 ft or less (560 mmHg, 75 kPa or more)**

1) Connect scan tool to DLC with ignition switch OFF.
2) Turn ON ignition switch and clear DTC using scan tool and warm up engine completely.
3) Run engine at idle speed for 1 min.
4) Check DTC and pending DTC.

www.cargeek.ir

www.CarGeek.ir


### DTC Troubleshooting

**NOTE**

**Before this trouble shooting is performed, read the precautions for DTC troubleshooting referring to "Precautions For DTC Troubleshooting: ".**

| Step | Action | Yes | No |
|---|---|---|---|
| 1 | *Was "Engine and Emission Control System Check" performed?* | Go to Step 2. | Go to "Engine and Emission Control System Check: ". |
| 2 | **MAP sensor and its circuit check**<br>1) Connect scan tool to DLC with ignition switch turned OFF.<br>2) Turn ON ignition switch.<br>3) Check DTC.<br>*Is there DTC P0107 or DTC P0108?* | Go to applicable DTC diag. flow. | Go to Step 3. |
| 3 | **MAP sensor output signal check**<br>1) Check MAP sensor according to "Manifold Absolute Pressure (MAP) Sensor Inspection: in Section 1C".<br>*Is it in good condition?* | Go to Step 4. | Faulty MAP sensor. |
| 4 | **MAP sensor circuit check**<br>1) Check MAP sensor circuit referring to Step 3 to 6 of "DTC P0107: Manifold Absolute Pressure Circuit Low Input: " or Step 3 to 8 of "DTC P0108: Manifold Absolute Pressure Circuit High Input: ".<br>*Is circuit in good condition?* | Go to Step 5. | Repair or replace. |
| 5 | **Air intake system check**<br>1) Check air intake system for clog or leak.<br>*Is it in good condition?* | Substitute a known-good ECM and recheck. | Repair or replace. |

## DTC P0107: Manifold Absolute Pressure Circuit Low Input

S5JB0A1104021

### Wiring Diagram

Refer to "DTC P0106: Manifold Absolute Pressure Range / Performance: ".

### DTC Detecting Condition and Trouble Area

| DTC detecting condition | Trouble area |
|---|---|
| Manifold absolute pressure sensor output voltage is lower than specified value for specified time continuously.<br>(1 driving cycle detection logic) | • Manifold absolute pressure sensor circuit<br>• Manifold absolute pressure sensor<br>• ECM |

**NOTE**

**When DTC P0532 and P1501 are indicated together, it is possible that "GRY/RED" wire circuit open.**

### DTC Confirmation Procedure

1) Connect scan tool to DLC with ignition switch turned OFF.
2) Turn ON ignition switch and clear DTC using scan tool and warm up engine completely.
3) Run engine at idle speed for 1 min.
4) Check DTC and pending DTC.

www.cargeek.ir

www.CarGeek.ir

## DTC Troubleshooting

**NOTE**

**Before this trouble shooting is performed, read the precautions for DTC troubleshooting referring to "Precautions For DTC Troubleshooting: ".**

| Step | Action | Yes | No |
|---|---|---|---|
| 1 | *Was "Engine and Emission Control System Check" performed?* | Go to Step 2. | Go to "Engine and Emission Control System Check: ". |
| 2 | **MAP sensor and its circuit check**<br>1) Connect scan tool to DLC with ignition switch turned OFF.<br>2) Turn ON ignition switch.<br>3) Check intake manifold pressure displayed on scan tool.<br>*Is it 0 kPa (0 in.Hg)?* | Go to Step 3. | Intermittent trouble. Check for intermittent referring to "Intermittent and Poor Connection Inspection: in Section 00". |
| 3 | **MAP sensor power supply voltage check**<br>1) Disconnect connector from MAP sensor with ignition switch turned OFF.<br>2) Check for proper connection of MAP sensor at "GRY/RED", "RED/WHT" and "GRY/GRN" wire terminals.<br>3) Turn ON ignition switch, measure voltage between engine ground and "GRY/RED" wire terminal of MAP sensor connector.<br> 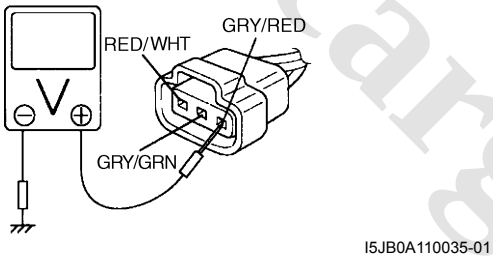 <br><br>*Is voltage 4 – 6 V?* | Go to Step 5. | Go to Step 4. |
| 4 | **MAP sensor power supply circuit check**<br>1) Disconnect connectors from ECM with ignition switch turned OFF.<br>2) Measure resistance between "GRY/RED" wire terminal of MAP sensor connector and "C37-14" terminal of ECM connector.<br>*Is resistance below 3 Ω?* | Go to Step 5. | "GRY/RED" wire is open circuit. |
| 5 | **MAP sensor signal circuit check**<br>1) Connect connectors to ECM with ignition switch turned OFF.<br>2) Measure voltage between "RED/WHT" wire terminal of MAP sensor connector and engine ground with ignition switch turned ON.<br>*Is voltage 4 – 6 V?* | Go to Step 7. | Go to Step 6. |

www.cargeek.ir

www.CarGeek.ir


| Step | Action | Yes | No |
|---|---|---|---|
| 6 | **MAP sensor signal circuit check**<br>1) Disconnect connectors from ECM with ignition switch turned OFF.<br>2) Measure resistance between “C37-55” terminal of ECM connector and vehicle body ground.<br>*Is resistance infinity?* | Go to Step 7. | “RED/WHT” wire is shorted to ground circuit. |
| 7 | **MAP sensor output signal check**<br>1) Check MAP sensor according to “Manifold Absolute Pressure (MAP) Sensor Inspection: in Section 1C”.<br>*Is it in good condition?* | Substitute a known-good ECM and recheck. | Faulty MAP sensor. |

## DTC P0108: Manifold Absolute Pressure Circuit High Input

S5JB0A1104022

### Wiring Diagram

Refer to “DTC P0106: Manifold Absolute Pressure Range / Performance: ”.

### DTC Detecting Condition and Trouble Area

| DTC detecting condition | Trouble area |
|---|---|
| Manifold absolute pressure sensor output voltage is higher than specified value for specified time continuously.<br>(1 driving cycle detection logic) | • Manifold absolute pressure sensor circuit<br>• Manifold absolute pressure sensor<br>• ECM |

**NOTE**

**When DTC P0113, P0118 and P0533 are indicated together, it is possible that “GRY/GRN” wire circuit is open.**

### DTC Confirmation Procedure

1) Connect scan tool to DLC with ignition switch turned OFF.
2) Turn ON ignition switch and clear DTC using scan tool and warm up engine completely.
3) Run engine at idle speed for 1 min.
4) Check DTC and pending DTC.

### DTC Troubleshooting

**NOTE**

**Before this trouble shooting is performed, read the precautions for DTC troubleshooting referring to “Precautions For DTC Troubleshooting: ”.**

| Step | Action | Yes | No |
|---|---|---|---|
| 1 | *Was “Engine and Emission Control System Check” performed?* | Go to Step 2. | Go to “Engine and Emission Control System Check: ”. |
| 2 | **MAP sensor and its circuit check**<br>1) Connect scan tool to DLC with ignition switch OFF.<br>2) Turn ignition switch ON.<br>3) Check intake manifold pressure displayed on scan tool.<br>*Is it 127 kPa (37.5 in.Hg)?* | Go to Step 3. | Intermittent trouble. Check for intermittent referring to “Intermittent and Poor Connection Inspection: in Section 00”. |

www.cargeek.ir

www.CarGeek.ir

| Step | Action | Yes | No |
|---|---|---|---|
| 3 | **MAP sensor power supply voltage check**<br>1) Disconnect connector from MAP sensor with ignition switch turned OFF.<br>2) Check for proper connection of MAP sensor at “GRY/RED”, “RED/WHT” and “GRY/GRN” wire terminals.<br>3) Turn ON ignition switch, measure voltage between engine ground and “GRY/RED” wire terminal of MAP sensor connector.<br> 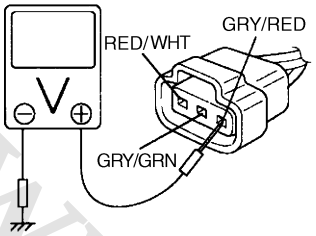 <br><br>I5JB0A110035-01<br>*Is voltage 4 – 6 V?* | Go to Step 4. | “GRY/RED” wire shorted to power circuit. |
| 4 | **MAP sensor ground circuit check**<br>1) Measure resistance between “GRY/GRN” wire terminal of MAP sensor connector and engine ground with ignition switch turned OFF.<br>*Is resistance below 3 Ω?* | Go to Step 6. | Go to Step 5. |
| 5 | **Ground circuit check**<br>1) Measure resistance between “C37-57” terminal of ECM connector and vehicle body ground.<br>*Is resistance below 3 Ω?* | “GRY/GRN” wire is open or high resistance circuit. | ECM grounds “C37-58”, “C37-48”, “C37-30”, “C37-29” and/or “C37-15” circuit are open or high resistance.<br>If wires are OK, substitute a known-good ECM and recheck. |
| 6 | **MAP sensor signal circuit check**<br>1) Turn ON ignition switch.<br>2) Measure voltage between “RED/WHT” wire terminal of MAP sensor connector and engine ground.<br>*Is voltage 4 – 6 V?* | Go to Step 8. | Go to Step 7. |
| 7 | **MAP sensor signal circuit check**<br>1) Disconnect connectors from ECM with ignition switch turned OFF.<br>2) Measure resistance between “RED/WHT” wire terminal of MAP sensor connector and “C37-55” terminal of ECM connector.<br>*Is resistance below 2 Ω?* | “RED/WHT” wire is shorted to power supply circuit. | “RED/WHT” wire is open or high resistance circuit. |
| 8 | **MAP sensor output signal check**<br>1) Check MAP sensor according to “Manifold Absolute Pressure (MAP) Sensor Inspection: in Section 1C”.<br>*Is it in good condition?* | Substitute a known-good ECM and recheck. | Faulty MAP sensor. |

www.cargeek.ir

www.CarGeek.ir


## DTC P0111: Intake Air Temperature Circuit Range / Performance

S5JB0A1104023

### Wiring Diagram

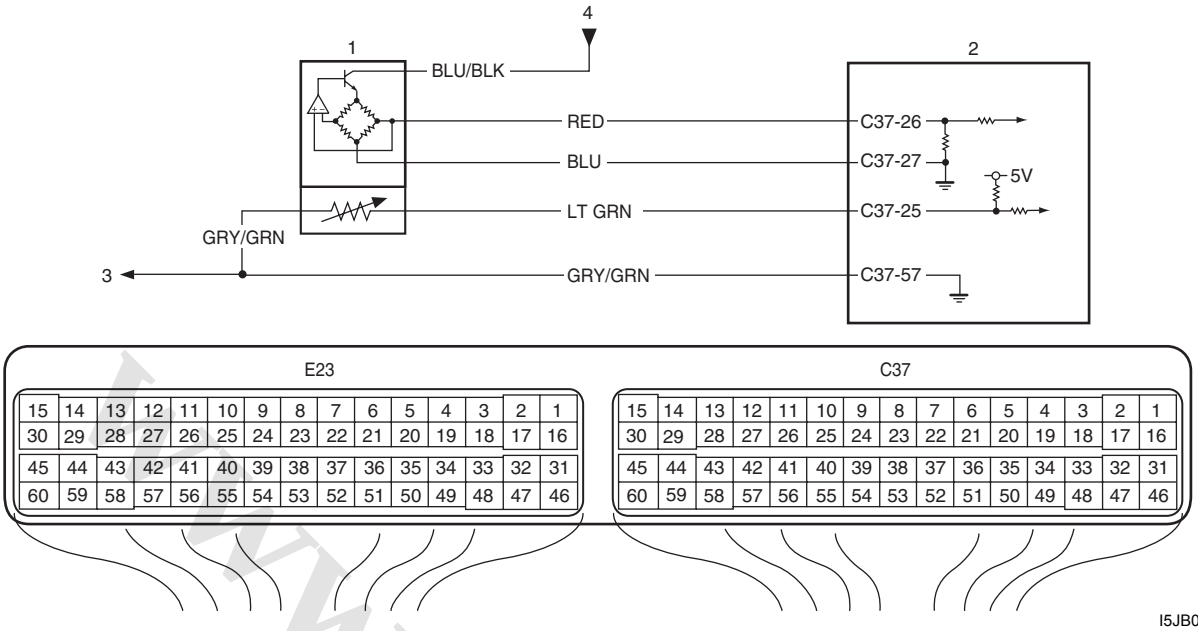


| | |
|---|---|
| 1. MAF and IAT sensor | 3. To other sensors |
| 2. ECM | 4. From main relay |

### DTC Detecting Condition and Trouble Area

| DTC detecting condition | Trouble area |
|---|---|
| Difference of maximum IAT minus minimum IAT is less than 0.3 °C (32.5 °F) while ECT is over 70 °C (158 °F) after 10 min from cold engine start (ECT is lower than 30°C (86 °F) at engine start). (2 driving cycle detection logic) | • High resistance circuit<br>• MAF and IAT sensor<br>• ECM |

### DTC Confirmation Procedure

**NOTE**

**Check to make sure that following conditions are satisfied when using this "DTC Confirmation Procedure".**

- **Intake air temperature at engine start: –10 °C (14 °F) to 80 °C (176 °F)**
- **Intake air temperature: –10 °C (14 °F) to 70 °C (158 °F)**
- **Engine coolant temperature at engine start: less than 30 °C (86 °F)**
- **Engine coolant temperature: 70 °C (158 °F) to 150 °C (302 °F)**
- **Altitude (barometric pressure): 2400 m, 8000 ft or less (560 mmHg, 75 kPa or more)**

1) With ignition switch turned OFF, connect scan tool.
2) Turn ON ignition switch, clear DTC using scan tool.
3) Start engine and warm up to normal operating temperature. (ECT approx. 90 – 95 °C, 194 – 203 °F)
4) Run engine at idle speed for 10 min. or more.
5) Check DTC and pending DTC.

www.cargeek.ir

www.CarGeek.ir

## DTC Troubleshooting

**NOTE**

**Before this trouble shooting is performed, read the precautions for DTC troubleshooting referring to "Precautions For DTC Troubleshooting: ".**

| Step | Action | Yes | No |
|---|---|---|---|
| 1 | *Was "Engine and Emission Control System Check" performed?* | Go to Step 2. | Go to "Engine and Emission Control System Check: ". |
| 2 | **IAT sensor and its circuit check**<br>1) Connect scan tool to DLC with ignition switch turned OFF.<br>2) Turn ignition switch to ON position.<br>3) Check intake air temp. displayed on scan tool.<br>*Is –40 ℃ (–40 ℉) or 119 ℃ (246 ℉) indicated?* | Go to Step 3. | Intermittent trouble.<br>Check for intermittent referring to "Intermittent and Poor Connection Inspection: in Section 00". |
| 3 | **Wire harness check**<br>1) Disconnect MAF and IAT sensor connector (1) with ignition switch turned OFF.<br>2) Check for proper connection to MAF and IAT sensor connector (1) at "LT GRN" and "GRY/GRN" wire terminals.<br>3) If OK, then with ignition switch turned ON, measure voltage between "LT GRN" wire terminal of MAF and IAT sensor connector and vehicle body ground.<br> 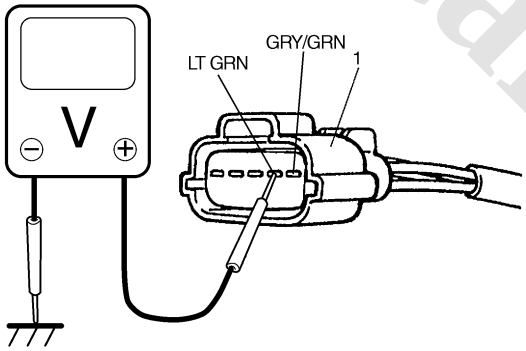 <br><br>I5JB0A110037-02<br>*Is measured voltage applied to "LT GRN" wire terminal about 4 – 6 V?* | Go to Step 8. | Go to Step 4. |
| 4 | **ECM voltage check**<br>1) Turn OFF ignition switch.<br>2) Remove ECM from its bracket with ECM connectors connected.<br>3) Check for proper connection of ECM connector at "C37-25" terminal.<br>4) If OK, then turn ON ignition switch, measure voltage between "C37-25" terminal of ECM connector and vehicle body ground.<br>*Is voltage about 4 – 6 V at terminal?* | "LT GRN" wire is open circuit.<br>If wire and connection are OK, go to Step 5. | Go to Step 5. |

www.cargeek.ir

www.CarGeek.ir


| Step | Action | Yes | No |
|---|---|---|---|
| 5 | **Wire circuit check**<br>1) Disconnect connectors from ECM with ignition switch turned OFF.<br>2) Measure resistance between “LT GRN” wire terminal of MAF and IAT sensor connector and vehicle body ground.<br>*Is resistance infinity?* | Go to Step 6. | “LT GRN” wire is shorted to ground or other circuit.<br>If wire is OK, substitute a known-good ECM and recheck. |
| 6 | **Wire circuit check**<br>1) Turn ignition switch to ON position.<br>2) Measure voltage between “LT GRN” wire terminal of MAF and IAT sensor connector and vehicle body ground.<br>*Is voltage about 0 V?* | Go to Step 7. | “LT GRN” wire shorted to other circuit.<br>If wire is OK, substitute a known-good ECM and recheck. |
| 7 | **Wire circuit check**<br>1) Measure resistance between “C37-25” terminal of ECM connector and “LT GRN” wire terminal of MAF and IAT sensor connector with ignition switch turned OFF.<br>*Is resistance below 3 Ω?* | Go to Step 8. | “LT GRN” wire is high resistance circuit. |
| 8 | **Ground circuit check**<br>1) Connect connectors to ECM.<br>2) Check for proper connection of MAF and IAT sensor connector at “GRY/GRN” wire terminal.<br>3) Measure resistance between “GRY/GRN” wire terminal of MAF and IAT sensor connector and vehicle body ground with ignition switch turned OFF.<br>*Is resistance below 5 Ω?* | Go to Step 10. | Go to Step 9. |
| 9 | **Ground circuit check**<br>1) Remove ECM from its bracket with ECM connectors connected.<br>2) Measure resistance between “C37-57” terminal of ECM connector and vehicle body ground.<br>*Is resistance below 3 Ω?* | “GRY/GRN” wire is open or high resistance circuit.<br>Poor “C37-57” connection. | Faulty ECM ground circuit.<br>If circuit is OK, substitute a known-good ECM and recheck. |
| 10 | **IAT sensor check**<br>1) Check IAT sensor according to “Mass Air Flow (MAF) and Intake Air Temperature (IAT) Sensor Inspection: in Section 1C”.<br>*Is it in good condition?* | Substitute a known-good ECM and recheck. | Replace MAF and IAT sensor. |

www.cargeek.ir

www.CarGeek.ir

## DTC P0112: Intake Air Temperature Sensor Circuit Low

S5JB0A1104024

### Wiring Diagram

Refer to “DTC P0111: Intake Air Temperature Circuit Range / Performance: ”.

### DTC Detecting Condition and Trouble Area

| DTC detecting condition | Trouble area |
|---|---|
| DTC will be set when all of following conditions are detected for 0.5 seconds continuously.<br>• Engine is running<br>• Voltage of IAT sensor output is less than specified value (High intake air temperature (low voltage / low resistance))<br>(1 driving cycle detection logic) | • IAT sensor circuit<br>• IAT sensor<br>• ECM |

### DTC Confirmation Procedure

1) With ignition switch turned OFF, connect scan tool.
2) Turn ON ignition switch and clear DTC using scan tool.
3) Start engine and run it for 10 sec.
4) Check DTC and pending DTC.

### DTC Troubleshooting

**NOTE**

**Before this trouble shooting is performed, read the precautions for DTC troubleshooting referring to “Precautions For DTC Troubleshooting: ”.**

| Step | Action | Yes | No |
|---|---|---|---|
| 1 | *Was “Engine and Emission Control System Check” performed?* | Go to Step 2. | Go to “Engine and Emission Control System Check: ”. |
| 2 | **IAT sensor and its circuit check**<br>1) Connect scan tool to DLC with ignition switch turned OFF.<br>2) Turn ON ignition switch.<br>3) Check intake air temp. displayed on scan tool.<br>*Is 119 ℃ (246 ℉) indicated?* | Go to Step 3. | Intermittent trouble.<br>Check for intermittent referring to “Intermittent and Poor Connection Inspection: in Section 00”. |

www.cargeek.ir

www.CarGeek.ir


| Step | Action | Yes | No |
|---|---|---|---|
| 3 | **ECM voltage check**<br>1) Disconnect connector from MAF and IAT sensor with ignition switch turned OFF.<br>2) Check for proper connection to MAF and IAT sensor at “LT GRN” and “GRY/GRN” wire terminals.<br>3) If OK, then turn ON ignition switch, measure voltage between “LT GRN” wire terminal of MAF and IAT sensor connector (1) and vehicle body ground.<br> 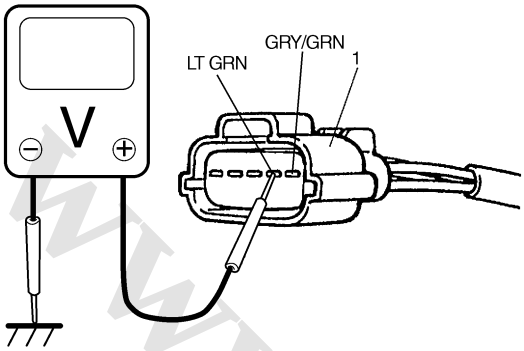 <br><br>I5JB0A110037-02<br>*Is voltage about 4 – 6 V?* | Go to Step 6. | Go to Step 4. |
| 4 | **IAT short circuit check**<br>1) Disconnect connectors from ECM with ignition switch turned OFF.<br>2) Measure resistance between “LT GRN” wire terminal of MAF and IAT sensor connector and vehicle body ground.<br>*Is resistance infinity?* | Go to Step 5. | “LT GRN” wire is shorted to ground circuit.<br>If wire is OK, substitute a known-good ECM and recheck. |
| 5 | **IAT short circuit check**<br>1) Turn ON ignition switch.<br>2) Measure voltage between “LT GRN” wire terminal of MAF and IAT sensor connector and vehicle body ground.<br>*Is voltage about 0 V?* | Go to Step 6. | “LT GRN” wire is shorted to other circuit.<br>If wire is OK, substitute a known-good ECM and recheck. |
| 6 | **IAT sensor for performance check**<br>1) Check IAT sensor according to “Mass Air Flow (MAF) and Intake Air Temperature (IAT) Sensor Inspection: in Section 1C”.<br>*Is it in good condition?* | Substitute a known-good ECM and recheck. | Replace MAF and IAT sensor. |

www.cargeek.ir

www.CarGeek.ir

## DTC P0113: Intake Air Temperature Sensor Circuit High

S5JB0A1104025

### Wiring Diagram

Refer to “DTC P0111: Intake Air Temperature Circuit Range / Performance: ”.

### DTC Detecting Condition and Trouble Area

| DTC detecting condition | Trouble area |
|---|---|
| DTC will be set when all of following conditions are detected for 0.5 seconds continuously.<br>• Engine is running<br>• Voltage of IAT sensor output is more than specified value (Low intake air temperature (high voltage / high resistance))<br>(1 driving cycle detection logic) | • IAT sensor circuit<br>• IAT sensor<br>• ECM |

**NOTE**

**When DTC P0108, P0118 and P0533 are indicated together, it is possible that “GRY/GRN” wire circuit is open.**

### DTC Confirmation Procedure

1) With ignition switch turned OFF, connect scan tool.
2) Turn ON ignition switch and clear DTC using scan tool.
3) Start engine and run it for 10 sec.
4) Check DTC and pending DTC.

### DTC Troubleshooting

**NOTE**

**Before this trouble shooting is performed, read the precautions for DTC troubleshooting referring to “Precautions For DTC Troubleshooting: ”.**

| Step | Action | Yes | No |
|---|---|---|---|
| 1 | *Was “Engine and Emission Control System Check” performed?* | Go to Step 2. | Go to “Engine and Emission Control System Check: ”. |
| 2 | **IAT sensor and its circuit check**<br>1) Connect scan tool to DLC with ignition switch turned OFF.<br>2) Turn ON ignition switch.<br>3) Check intake air temp. displayed on scan tool.<br>*Is –40 °C (–40 °F) indicated?* | Go to Step 3. | Intermittent trouble. Check for intermittent referring to “Intermittent and Poor Connection Inspection: in Section 00”. |

www.cargeek.ir

www.CarGeek.ir


| Step | Action | Yes | No |
|---|---|---|---|
| 3 | **IAT sensor voltage check**<br>1) Disconnect connector from MAF and IAT sensor with ignition switch turned OFF.<br>2) Check for proper connection to MAF and IAT sensor at “LT GRN” and “GRY/GRN” wire terminals.<br>3) If OK, then turn ON ignition switch, measure voltage between “LT GRN” wire terminal of MAF and IAT sensor connector (1) and vehicle body ground.<br> 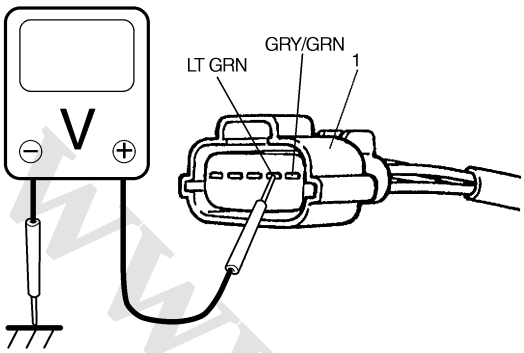 <br><br>I5JB0A110037-02<br>*Is voltage about 4 – 6 V?* | Go to Step 7. | Go to Step 4. |
| 4 | **ECM voltage check**<br>1) Turn OFF ignition switch.<br>2) Remove ECM from its bracket with ECM connectors connected.<br>3) Check for proper connection of ECM connector at “C37-25” terminal.<br>4) If OK, then turn ON ignition switch, measure voltage between “C37-25” terminal of ECM connector and vehicle body ground.<br>*Is voltage about 4 – 6 V?* | “LT GRN” wire is open circuit. If wire and connection are OK, go to Step 5. | Go to Step 5. |
| 5 | **Wire circuit check**<br>1) Disconnect connectors from ECM with ignition switch turned OFF.<br>2) Turn ON ignition switch.<br>3) Measure voltage between “LT GRN” wire terminal of MAF and IAT sensor connector and vehicle body ground.<br>*Is voltage about 0 V?* | Go to Step 6. | “LT GRN” wire is shorted to other circuit.<br>If wire is OK, substitute a known-good ECM and recheck. |
| 6 | **Wire circuit check**<br>1) Measure resistance between “C37-25” terminal of ECM connector and “LT GRN” wire terminal of MAF and IAT sensor connector with ignition switch turned OFF.<br>*Is resistance below 3 Ω?* | Go to Step 7. | “LT GRN” wire is high resistance circuit. |
| 7 | **Ground circuit check**<br>1) Connect connectors to ECM.<br>2) Measure resistance between “GRY/GRN” wire terminal of MAF and IAT sensor connector and vehicle body ground with ignition switch turned OFF.<br>*Is resistance below 3 Ω?* | Go to Step 9. | Go to Step 8. |

www.cargeek.ir

www.CarGeek.ir

| Step | Action | Yes | No |
|---|---|---|---|
| 8 | **Ground circuit check**<br>1) Remove ECM from its bracket with ECM connectors connected.<br>2) Measure resistance between “C37-57” terminal of ECM connector and vehicle body ground.<br>*Is resistance below 3 Ω?* | “GRY/GRN” wire is open circuit or high resistance circuit. Poor “C37-57” connection. | Faulty ECM ground circuit. If circuit is OK, substitute a known-good ECM and recheck. |
| 9 | **IAT sensor for performance check**<br>1) Check IAT sensor according to “Mass Air Flow (MAF) and Intake Air Temperature (IAT) Sensor Inspection: in Section 1C”.<br>*Is it in good condition?* | Substitute a known-good ECM and recheck. | Replace MAF and IAT sensor. |

## DTC P0116: Engine Coolant Temperature Circuit Range / Performance

S5JB0A1104026

### Wiring Diagram

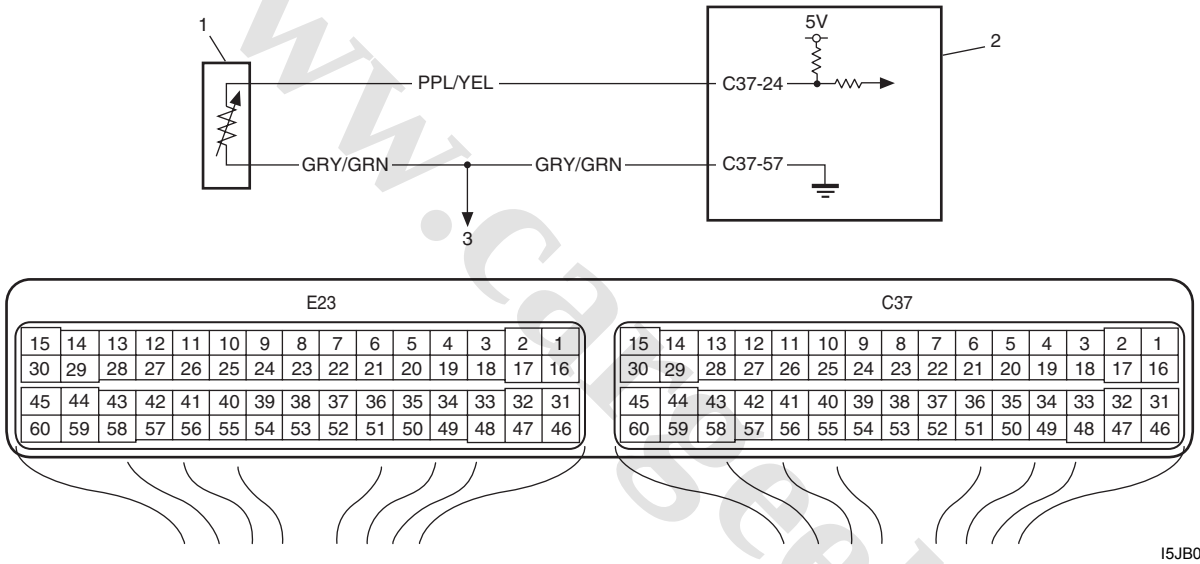


| | |
|---|---|
| 1. | ECT sensor |
| 2. | ECM |
| 3. | To other sensors |

### DTC Detecting Condition and Trouble Area

| DTC detecting condition | Trouble area |
|---|---|
| ECT sensor values is less than –10 °C, 14 °F (for M16 engine) or –5 °C, 23 °F (for J20 engine) while engine is running under more than specified engine load (more than 1000 rpm) for 2 to 1116 min (depending on ECT at engine start) continuously from engine start.<br>(2 driving cycle detecting logic) | • ECT sensor<br>• ECT sensor circuit<br>• Thermostat<br>• ECM |

www.cargeek.ir

www.CarGeek.ir


### DTC Confirmation Procedure

**⚠ WARNING**

- **When performing a road test, select a place where there is no traffic or possibility of a traffic accident and be very careful during testing to avoid occurrence of an accident.**
- **Road test should be carried out by 2 persons, a driver and tester, on a level road.**

**NOTE**

**Check to make sure that following conditions are satisfied when using this "DTC Confirmation Procedure".**

- **Intake air temperature at engine start: –10 °C (14 °F) to 80 °C (176 °F)**
- **Intake air temperature: –10 °C (14 °F) to 70 °C (158 °F)**
- **Altitude (barometric pressure): 2400 m, 8000 ft or less (560 mmHg, 75 kPa or more)**

1) With ignition switch turned OFF, connect scan tool.
2) Turn ON ignition switch, clear DTC.
3) Start engine.
4) Drive vehicle at 40 mph (60 km/h) or higher for 20 min. or more.
5) Stop vehicle.
6) Check DTC and pending DTC.

### DTC Troubleshooting

**NOTE**

**Before this trouble shooting is performed, read the precautions for DTC troubleshooting referring to "Precautions For DTC Troubleshooting: ".**

| Step | Action | Yes | No |
|---|---|---|---|
| 1 | *Was "Engine and Emission Control System Check" performed?* | Go to Step 2. | Go to "Engine and Emission Control System Check: ". |
| 2 | **DTC check**<br>1) With ignition switch turned OFF, install scan tool to DLC.<br>2) Turn ON ignition switch and check DTC with scan tool.<br>*Is DTC P0118 displayed?* | Go to "DTC P0118: Engine Coolant Temperature Circuit High: ". | Go to Step 3. |
| 3 | **Engine coolant temp. check**<br>1) Turn ON ignition switch and check engine coolant temp. displayed on scan tool.<br>2) Warm up engine to normal operating temp. and check engine coolant temp. displayed on scan tool.<br>*Does engine coolant temp. vary more than 1 °C (1 °F) and rise higher than 70 °C (158 °F)?* | Intermittent trouble.<br>Check for intermittent referring to "Intermittent and Poor Connection Inspection: in Section 00". | Go to Step 4. |
| 4 | **Thermostat check**<br>*Is there a symptom due to thermostat remaining open (it takes a long time before vehicle heater becomes effective or before engine is warmed to normal operating temp., etc.)?* | Check thermostat referring to "Thermostat Inspection: in Section 1F". | Go to Step 5. |

www.cargeek.ir

www.CarGeek.ir

| Step | Action | Yes | No |
|---|---|---|---|
| 5 | **Wire harness check**<br>1) Disconnect ECT sensor connector with ignition switch turned OFF.<br>2) Check for proper connection to ECT sensor connector at “PPL/YEL” and “GRY/GRN” wire terminals.<br>3) If OK, then with ignition switch ON, measure voltage between “PPL/YEL” wire terminal of ECT sensor connector and vehicle body ground.<br> 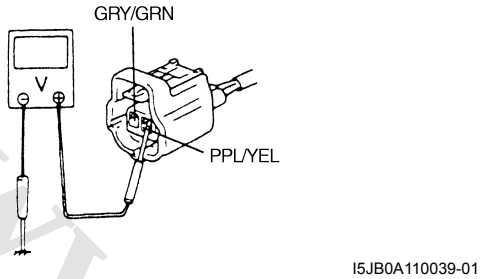 <br><br>*Is voltage about 4 – 6 V?* | Go to Step 9. | Go to Step 6. |
| 6 | **ECM voltage check**<br>1) Turn OFF ignition switch.<br>2) Remove ECM from its bracket with ECM connectors connected.<br>3) Check for proper connection of ECM connector at “C37-24” terminal.<br>4) If OK, then turn ON ignition switch, measure voltage between “C37-24” terminal of ECM connector and vehicle body ground.<br>*Is voltage about 4 – 6 V?* | “PPL/YEL” wire is open circuit.<br>If wire and connection are OK, go to Step 7. | Go to Step 7. |
| 7 | **Wire circuit check**<br>1) Disconnect connectors from ECM with ignition switch turned OFF.<br>2) Turn ignition switch to ON position.<br>3) Measure voltage between “PPL/YEL” wire terminal of ECT sensor connector and body ground.<br>*Is voltage about 0 V?* | Go to Step 8. | “PPL/YEL” wire is shorted to other circuit.<br>If wire is OK, substitute a known-good ECM and recheck. |
| 8 | **Wire circuit check**<br>1) Measure resistance between “C37-24” terminal of ECM connector and “PPL/YEL” wire terminal of ECT sensor connector with ignition switch turned OFF.<br>*Is resistance below 3 Ω?* | Go to Step 9. | “PPL/YEL” wire is high resistance circuit. |
| 9 | **Ground circuit check**<br>1) Connect connectors to ECM.<br>2) Check for proper connection of ECT sensor connector at “GRY/GRN” wire terminal.<br>3) Measure resistance between “GRY/GRN” wire terminal of ECT sensor connector and vehicle body ground.<br>*Is resistance below 3 Ω?* | Go to Step 11. | Go to Step 10. |

www.cargeek.ir

www.CarGeek.ir


| Step | Action | Yes | No |
|---|---|---|---|
| 10 | **Ground circuit check**<br>1) Remove ECM from its bracket with ECM connectors connected.<br>2) Measure resistance between “C37-57” terminal of ECM connector and vehicle body ground.<br>*Is resistance below 3 Ω?* | “GRY/GRN” wire is high resistance circuit.<br>Poor “C37-57” connection. | Faulty ECM ground circuit.<br>If circuit is OK, substitute a known-good ECM and recheck. |
| 11 | **ECT sensor check**<br>1) Check ECT sensor according to “Engine Coolant Temperature (ECT) Sensor Inspection: in Section 1C”.<br>*Is it in good condition?* | Substitute a known-good ECM and recheck. | Replace ECT sensor. |

## DTC P0117: Engine Coolant Temperature Circuit Low

S5JB0A1104027

### Wiring Diagram

Refer to “DTC P0116: Engine Coolant Temperature Circuit Range / Performance: ”.

### DTC Detecting Condition and Trouble Area

| DTC detecting condition | Trouble area |
|---|---|
| DTC will be set when all of following conditions are detected for 0.5 seconds continuously.<br>• Engine is running<br>• Voltage of ECT sensor output is less than specified value (High engine coolant temperature (low voltage / low resistance))<br>(1 driving cycle detection logic) | • ECT sensor circuit<br>• ECT sensor<br>• ECM |

### DTC Confirmation Procedure

1) With ignition switch turned OFF, connect scan tool.
2) Turn ON ignition switch and clear DTC using scan tool.
3) Start engine and run it for 10 sec. or more.
4) Check DTC and pending DTC.

### DTC Troubleshooting

**NOTE**

**Before this trouble shooting is performed, read the precautions for DTC troubleshooting referring to “Precautions For DTC Troubleshooting: ”.**

| Step | Action | Yes | No |
|---|---|---|---|
| 1 | *Was “Engine and Emission Control System Check” performed?* | Go to Step 2. | Go to “Engine and Emission Control System Check: ”. |
| 2 | **ECT sensor and its circuit check**<br>1) Connect scan tool with ignition switch turned OFF.<br>2) Turn ON ignition switch.<br>3) Check engine coolant temp. displayed on scan tool.<br>*Is 130 ℃ (266 ℉) indicated?* | Go to Step 3. | Intermittent trouble.<br>Check for intermittent referring to “Intermittent and Poor Connection Inspection: in Section 00”. |

www.cargeek.ir

www.CarGeek.ir

| Step | Action | Yes | No |
|---|---|---|---|
| 3 | **ECM voltage check**<br>1) Disconnect connector from ECT sensor with ignition switch turned OFF.<br>2) Check for proper connection to ECT sensor at “PPL/YEL” and “GRY/GRN” wire terminals.<br>3) If OK, then turn ON ignition switch, measure voltage between “PPL/YEL” wire terminal of ECT sensor connector and vehicle body ground.<br> 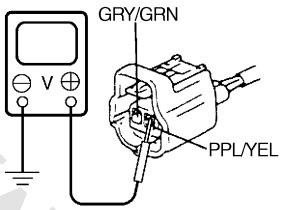 <br><br>I5JB0A110040-01<br>*Is voltage about 4 – 6 V?* | Go to Step 6. | Go to Step 4. |
| 4 | **ECT sensor short circuit check**<br>1) Disconnect connectors from ECM with ignition switch turned OFF.<br>2) Measure resistance between “PPL/YEL” wire terminal of ECT sensor connector and vehicle body ground.<br>*Is resistance infinity?* | Go to Step 5. | “PPL/YEL” wire is shorted to ground circuit.<br>If wire is OK, substitute a known-good ECM and recheck. |
| 5 | **ECT sensor short circuit check**<br>1) Turn ON ignition switch.<br>2) Measure voltage between “PPL/YEL” wire terminal of ECT sensor connector and vehicle body ground.<br>*Is voltage about 0 V?* | Go to Step 6. | “PPL/YEL” wire is shorted to other circuit.<br>If wire is OK, substitute a known-good ECM and recheck. |
| 6 | **ECT sensor for performance check**<br>1) Check ECT sensor according to “Engine Coolant Temperature (ECT) Sensor Inspection:  in Section 1C”.<br>*Is it in good condition?* | Substitute a known-good ECM and recheck. | Replace ECT sensor. |

## DTC P0118: Engine Coolant Temperature Circuit High

S5JB0A1104028

### Wiring Diagram

Refer to “DTC P0116: Engine Coolant Temperature Circuit Range / Performance: ”.

### DTC Detecting Condition and Trouble Area

| DTC detecting condition | Trouble area |
|---|---|
| DTC will be set when all of following conditions are detected for 0.5 seconds continuously.<br>• Engine is running<br>• Voltage of ECT sensor output is more than specified value (Low engine coolant temperature (high voltage / high resistance))<br>(1 driving cycle detection logic) | • ECT sensor circuit<br>• ECT sensor<br>• ECM |

**NOTE**

**When DTC P0108, P0113 and P0533 are indicated together, it is possible that “GRY/GRN” wire circuit open.**

www.cargeek.ir

www.CarGeek.ir


**DTC Confirmation Procedure**

1) With ignition switch turned OFF, connect scan tool.
2) Turn ON ignition switch and clear DTC using scan tool.
3) Start engine and run it for 10 sec. or more.
4) Check DTC and pending DTC.

**DTC Troubleshooting**

**NOTE**

**Before this trouble shooting is performed, read the precautions for DTC troubleshooting referring to "Precautions For DTC Troubleshooting: ".**

| Step | Action | Yes | No |
|---|---|---|---|
| 1 | *Was "Engine and Emission Control System Check" performed?* | Go to Step 2. | Go to "Engine and Emission Control System Check: ". |
| 2 | **ECT sensor and its circuit check**<br>1) Connect scan tool with ignition switch turned OFF.<br>2) Turn ON ignition switch.<br>3) Check engine coolant temp. displayed on scan tool.<br>*Is –40 °C (–40 °F) indicated?* | Go to Step 3. | Intermittent trouble.<br>Check for intermittent referring to "Intermittent and Poor Connection Inspection: in Section 00". |
| 3 | **ECT voltage check**<br>1) Disconnect connector from ECT sensor with ignition switch turned OFF.<br>2) Check for proper connection to ECT sensor at "PPL/YEL" and "GRY/GRN" wire terminals.<br>3) If OK, then turn ON ignition switch, measure voltage between "PPL/YEL" wire terminal of ECT sensor connector and vehicle body ground.<br> 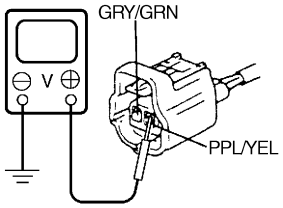 <br><br>I5JB0A110040-01<br>*Is voltage about 4 – 6 V?* | Go to Step 6. | Go to Step 4. |
| 4 | **ECM voltage check**<br>1) Turn OFF ignition switch.<br>2) Remove ECM from its bracket with ECM connectors connected.<br>3) Check for proper connection of ECM connector at "C37-24" terminal.<br>4) If OK, then turn ON ignition switch, measure voltage between "C37-24" wire terminal of ECM connector and vehicle body ground.<br>*Is voltage about 4 – 6 V?* | "PPL/YEL" wire is open circuit. If wire and connection are OK, go to Step 5. | Go to Step 5. |

www.cargeek.ir

www.CarGeek.ir

| Step | Action | Yes | No |
|---|---|---|---|
| 5 | **ECT sensor harness voltage check**<br>1) Disconnect connectors from ECM with ignition switch turned OFF.<br>2) Turn ON ignition switch.<br>3) Measure voltage between “PPL/YEL” wire terminal of ECT sensor connector and vehicle body ground.<br>*Is voltage about 0 V?* | Go to Step 6. | “PPL/YEL” wire is shorted to other circuit.<br>If wire is OK, substitute a known-good ECM and recheck. |
| 6 | **ECT sensor harness resistance check**<br>1) Measure resistance between “C37-24” terminal of ECM connector and “PPL/YEL” wire terminal of ECT sensor connector with ignition switch turn OFF.<br>*Is resistance below 3 Ω?* | Go to Step 7. | “PPL/YEL” wire is high resistance circuit. |
| 7 | **ECT sensor ground circuit check**<br>1) Connect connectors to ECM.<br>2) Check for proper connection of ECT sensor connector at “GRY/GRN” wire terminal.<br>3) Measure resistance between “GRY/GRN” wire terminal of ECT sensor connector and vehicle body ground.<br>*Is resistance below 3 Ω?* | Go to Step 9. | Go to Step 8. |
| 8 | **ECT sensor ground circuit check**<br>1) Measure resistance between “C37-57” terminal of ECM connector and vehicle body ground.<br>*Is resistance below 3 Ω?* | “GRY/GRN” wire is open circuit or high resistance circuit. Poor “C37-57” connection. | Faulty ECM ground circuit. If circuit is OK, substitute a known-good ECM and recheck. |
| 9 | **ECT sensor for performance check**<br>1) Check ECT sensor according to “Engine Coolant Temperature (ECT) Sensor Inspection: in Section 1C”.<br>*Is it in good condition?* | Substitute a known-good ECM and recheck. | Replace ECT sensor. |

www.cargeek.ir
www.cargeek.ir

www.CarGeek.ir


## DTC P0122: Throttle Position Sensor (Main) Circuit Low

S5JB0A1104073

### Wiring Diagram

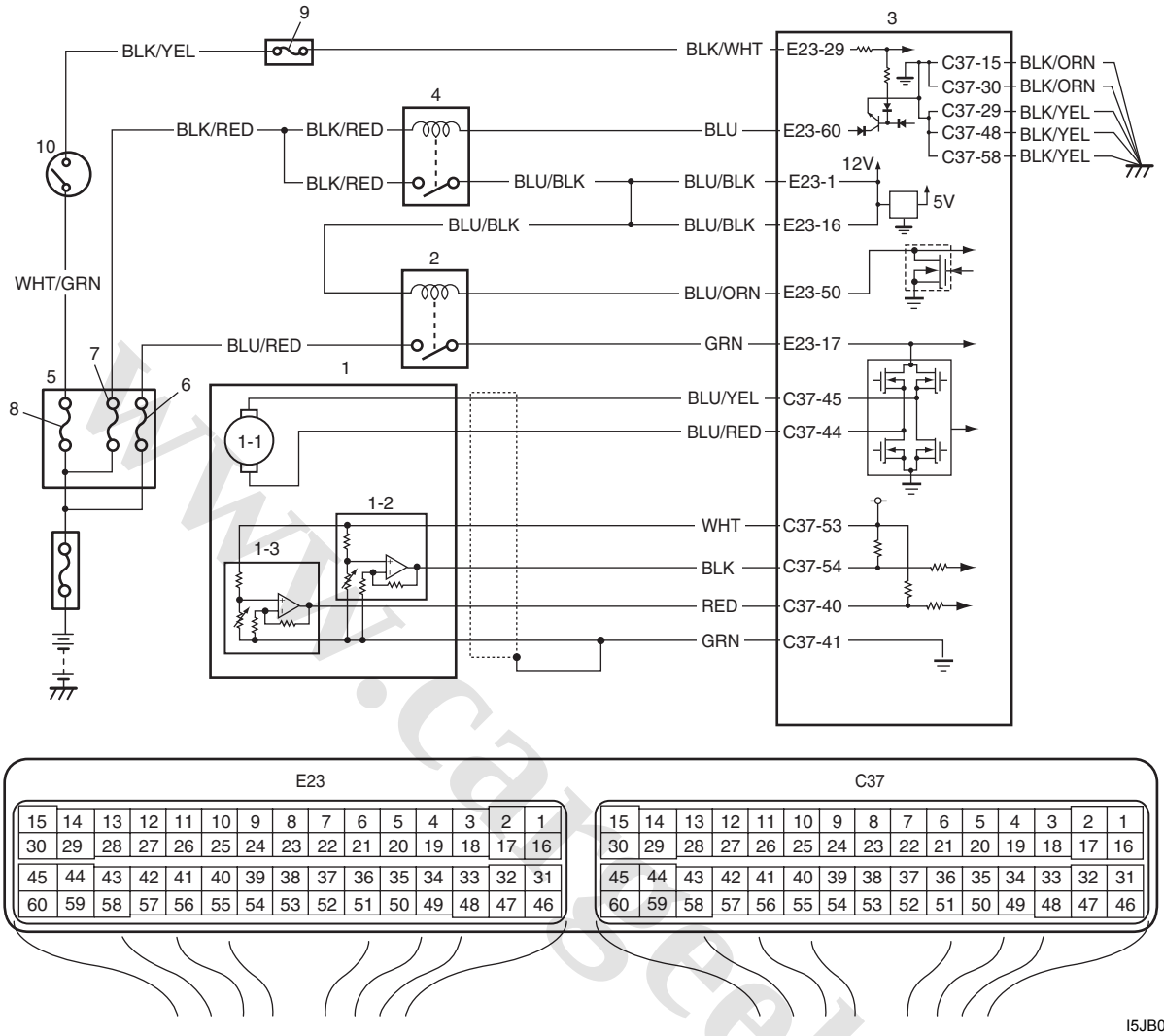


I5JB0A110041-01

| | | |
|---|---|---|
| 1. Electric throttle body assembly | 3. ECM | 8. “IGN” fuse |
| 1-1. Throttle actuator | 4. Main relay | 9. “IG COIL” fuse |
| 1-2. Throttle position sensor (main) | 5. Fuse box No.2 | 10. Ignition switch |
| 1-3. Throttle position sensor (sub) | 6. “THR MOT” fuse | |
| 2. Throttle actuator control relay | 7. “FI” fuse | |

### DTC Detecting Condition and Trouble Area

| DTC detecting condition | Trouble area |
|---|---|
| Output voltage of throttle position sensor (main) is less than specified value for specified time continuously.<br>(1 driving detection logic) | • Throttle position sensor (main) circuit<br>• Electric throttle body assembly<br>• ECM |

**NOTE**

**When DTC P0122 and P0222 are indicated together, it is possible that “WHT” wire open circuit.**

www.cargeek.ir

www.CarGeek.ir

**DTC Confirmation Procedure**

1) With ignition switch turned OFF, connect scan tool.
2) Turn ON ignition switch and clear DTC using scan tool.
3) Keep the accelerator pedal at idle position for 2 seconds.
4) Keep the accelerator pedal at fully depressed position for 2 seconds.
5) Repeat Step 3) and 4) for 3 times.
6) Check DTC.

**DTC Troubleshooting**

**NOTE**

**Before this trouble shooting is performed, read the precautions for DTC troubleshooting referring to "Precautions For DTC Troubleshooting: ".**

| Step | Action | Yes | No |
|---|---|---|---|
| 1 | *Was "Engine and Emission Control System Check" performed?* | Go to Step 2. | Go to "Engine and Emission Control System Check: ". |
| 2 | **Throttle position sensor and its circuit check**<br>1) Connect scan tool to DLC with ignition switch turned OFF.<br>2) Turn ON ignition switch, check "TP Sensor 1 Volt" displayed on scan tool when accelerator pedal is idle position and fully depressed.<br>*Is displayed TP sensor value as described voltage in "Scan Tool Data: "?* | Intermittent trouble.<br>Check for intermittent referring to "Intermittent and Poor Connection Inspection: in Section 00". | Go to Step 3. |
| 3 | **ECM voltage check**<br>1) Disconnect connector from electric throttle body assembly with ignition switch turned OFF.<br>2) Check for proper connection to electric throttle body assembly at "WHT", "GRN" and "BLK" wire terminals.<br>**For J20 engine**<br> 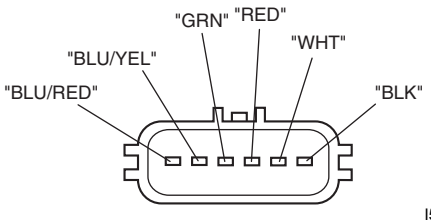 <br><br>I5JB0A110042-01<br>**For M16 engine**<br> 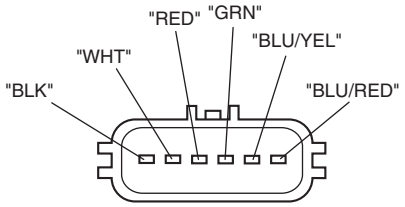 <br><br>I5JB0A110043-01<br>3) If OK, measure voltage between "WHT" wire terminal of electric throttle body assembly connector and engine ground with ignition switch turned ON.<br>*Is voltage 4 – 6 V?* | Go to Step 6. | Go to Step 4. |

www.cargeek.ir

www.CarGeek.ir


| Step | Action | Yes | No |
|---|---|---|---|
| 4 | **ECM voltage check**<br>1) Turn OFF ignition switch.<br>2) Remove ECM from its bracket with ECM connectors connected.<br>3) Check for proper connection of ECM connector at “C37-53” terminal.<br>4) If OK, measure voltage between “C37-53” terminal of ECM connector and engine ground with ignition switch turned ON.<br>*Is voltage 4 – 6 V?* | “WHT” wire is open or high resistance circuit. | Go to Step 5. |
| 5 | **Wire harness check**<br>1) Disconnect connectors from ECM with ignition switch turned OFF.<br>2) Measure resistance between “C37-53” terminal of ECM connector and engine ground.<br>*Is resistance infinity?* | Substitute a known-good ECM and recheck. | “WHT” wire is shorted to ground circuit. |
| 6 | **Wire harness check**<br>1) Measure voltage between “BLK” wire terminal of electric throttle body assembly connector and engine ground with ignition switch turned ON.<br>*Is voltage 4 – 6 V?* | Go to Step 9. | Go to Step 7. |
| 7 | **Wire harness check**<br>1) Disconnect connectors from ECM with ignition switch turned OFF.<br>2) Check for proper connection of ECM connector at “C37-54” and “C37-41” terminals.<br>3) If OK, measure resistance between “GRN” and “BLK” wire terminals of electric throttle body assembly connector.<br>*Is resistance infinity?* | Go to Step 8. | “BLK” wire is shorted to “GRN” wire. |
| 8 | **Wire harness check**<br>1) Measure resistance between “BLK” wire terminal of electric throttle body assembly connector and engine ground with ignition switch turned OFF.<br>*Is resistance infinity?* | Substitute a known-good ECM and recheck. | “BLK” wire is shorted to ground circuit. |
| 9 | **Electric throttle body assembly check**<br>1) Check throttle pedal position sensor referring to “Throttle Position Sensor Performance Check” under “Electric Throttle Body Assembly On-Vehicle Inspection: in Section 1C”.<br>*Is output voltage within specified value?* | Substitute a known-good ECM and recheck. | Replace electric throttle body assembly. |

www.cargeek.ir

www.CarGeek.ir

## DTC P0123: Throttle Position Sensor (Main) Circuit High

S5JB0A1104074

### Wiring Diagram

Refer to “DTC P0122: Throttle Position Sensor (Main) Circuit Low: ”.

### DTC Detecting Condition and Trouble Area

| DTC detecting condition | Trouble area |
|---|---|
| Output voltage of throttle position sensor (main) is more than specified value for specified time continuously.<br>(1 driving detection logic) | • Throttle position sensor (main) circuit<br>• Electric throttle body assembly<br>• ECM |

**NOTE**

**When DTC P0123 and P0223 are indicated together, it is possible that “WHT” wire shorted to power circuit and/or “GRN” wire open.**

### DTC Confirmation Procedure

1) With ignition switch turned OFF, connect scan tool.
2) Turn ON ignition switch and clear DTC using scan tool.
3) Keep the accelerator pedal at idle position for 2 seconds.
4) Keep the accelerator pedal at fully depressed position for 2 seconds.
5) Repeat Step 3) and 4) for 3 times.
6) Check DTC.

### DTC Troubleshooting

**NOTE**

**Before this trouble shooting is performed, read the precautions for DTC troubleshooting referring to “Precautions For DTC Troubleshooting: ”.**

| Step | Action | Yes | No |
|---|---|---|---|
| 1 | *Was “Engine and Emission Control System Check” performed?* | Go to Step 2. | Go to “Engine and Emission Control System Check: ”. |
| 2 | **Throttle position sensor and its circuit check**<br>1) Connect scan tool to DLC with ignition switch turned OFF.<br>2) Turn ON ignition switch, check “TP Sensor 1 Volt” displayed on scan tool when accelerator pedal is idle position and fully depressed.<br>*Is displayed TP sensor value as described voltage in “Scan Tool Data: ”?* | Intermittent trouble.<br>Check for intermittent referring to “Intermittent and Poor Connection Inspection: in Section 00”. | Go to Step 3. |

www.cargeek.ir

www.CarGeek.ir


| Step | Action | Yes | No |
|---|---|---|---|
| 3 | **ECM voltage check**<br>1) Disconnect connector from electric throttle body assembly with ignition switch turned OFF.<br>2) Check for proper connection to electric throttle body assembly at “WHT”, “GRN” and “BLK” wire terminals.<br>**For J20 engine**<br> 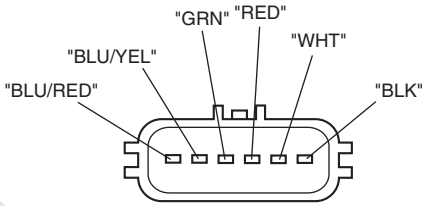 <br><br>I5JB0A110042-01<br>**For M16 engine**<br> 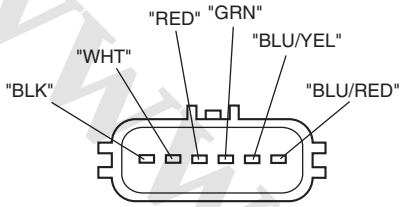 <br><br>I5JB0A110043-01<br>3) If OK, measure voltage between “WHT” wire terminal of electric throttle body assembly connector and engine ground with ignition switch turned ON.<br>*Is voltage 4 – 6 V?* | Go to Step 5. | Go to Step 4. |
| 4 | **Wire harness check**<br>1) Disconnect connectors from ECM with ignition switch turned OFF.<br>2) Check for proper connection of ECM connector at “C37-53” terminal.<br>3) Measure voltage between “C37-53” terminal of ECM connector and engine ground with ignition switch turned ON.<br>*Is voltage 0 V?* | Substitute a known-good ECM and recheck. | “WHT” wire is shorted to power circuit. |
| 5 | **Wire harness check**<br>1) Measure voltage between “BLK” wire terminal of electric throttle body assembly connector and engine ground with ignition switch turned ON.<br>*Is voltage 4 – 6 V?* | Go to Step 9. | Go to Step 6. |
| 6 | **Wire harness check**<br>1) Turn OFF ignition switch.<br>2) Remove ECM from its bracket with ECM connectors connected.<br>3) Check for proper connection of ECM connector at “C37-53” and “C37-54” terminals.<br>4) If OK, measure voltage between “C37-54” terminal of ECM connector and engine ground with ignition switch turned ON.<br>*Is voltage 4 – 6 V?* | “BLK” wire is open or high resistance circuit. | Go to Step 7. |

www.cargeek.ir

www.CarGeek.ir

| Step | Action | Yes | No |
|---|---|---|---|
| 7 | **Wire harness check**<br>1) Disconnect connectors from ECM with ignition switch turned OFF.<br>2) Measure resistance between “BLK” and “WHT” wire terminals of electric throttle body assembly connector.<br>*Is resistance infinity?* | Go to Step 8. | “BLK” wire is shorted to “WHT” wire. |
| 8 | **Wire harness check**<br>1) Turn ON ignition switch.<br>2) Measure voltage between “C37-54” terminal of ECM connector and engine ground.<br>*Is voltage 0 V?* | Substitute a known-good ECM and recheck. | “BLK” wire is shorted to power circuit. |
| 9 | **Ground circuit check**<br>1) Turn OFF ignition switch.<br>2) Measure resistance between “GRN” wire terminal of electric throttle body assembly connector and engine ground.<br>*Is resistance below 5 Ω?* | Go to Step 11. | Go to Step 10. |
| 10 | **Ground circuit check**<br>1) Remove ECM from its bracket with ECM connectors connected.<br>2) Check for proper connection of ECM connector at “C37-41” terminal.<br>3) Measure resistance between “C37-41” terminal of ECM connector and engine ground with ignition switch turned OFF.<br>*Is resistance below 5 Ω?* | “GRN” wire is open or high resistance circuit. | Faulty ECM ground circuit. If circuit is OK, substitute a known-good ECM and recheck. |
| 11 | **Electric throttle body assembly check**<br>1) Check throttle pedal position sensor referring to “Throttle Position Sensor Performance Check” under “Electric Throttle Body Assembly On-Vehicle Inspection: in Section 1C”.<br>*Is output voltage within specified value?* | Substitute a known-good ECM and recheck. | Replace electric throttle body assembly. |

www.cargeek.ir

www.CarGeek.ir


## DTC P0131 / P0132 / P0134: O2 Sensor (HO2S) Circuit Low Voltage / High Voltage / No Activity Detected (Sensor-1)

S5JB0A1104032

### Wiring Diagram

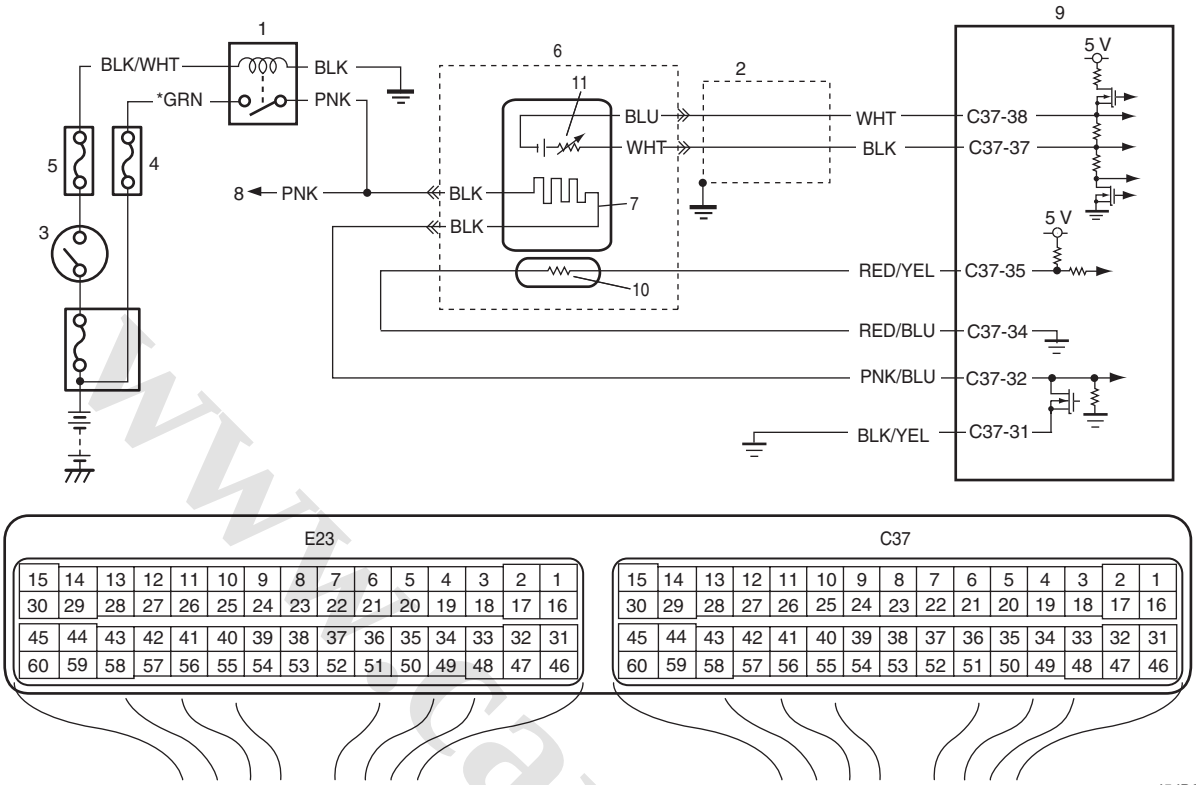


I5JB0A110044-02

| | | | |
|---|---|---|---|
| 1. HO2 heater relay | 4. "O2 HTR" fuse | 7. Heater | 10. Adjusting resistor |
| 2. Shield wire | 5. "IG COIL" fuse | 8. To HO2S-2 heater | 11. Sensor |
| 3. Ignition switch | 6. A/F sensor | 9. ECM | *: For M16 engine |

### A/F Sensor Description

Refer to "A/F Sensor Description: ".

### DTC Detecting Condition and Trouble Area

| DTC detecting condition | Trouble area |
|---|---|
| **DTC P0131:**<br>A/F sensor (LF+) terminal voltage is lower than specified range or A/F sensor output current is lower than specification.<br>(2 driving cycle detection logic)<br>**DTC P0132:**<br>A/F sensor (LF+) terminal voltage is higher than specified range or A/F sensor output current is more than specification.<br>(2 driving cycle detection logic)<br>**DTC P0134:**<br>Impedance of A/F sensor element is higher than specification for more than 160 sec even though A/F sensor heater is turned ON for more than specified time with engine running. (A/F sensor or sensor circuit open)<br>(2 driving cycle detection logic) | • A/F sensor circuit<br>• A/F sensor<br>• ECM |

www.cargeek.ir

www.CarGeek.ir

**DTC Confirmation Procedure**

1) With ignition switch turned OFF, connect scan tool.
2) Turn ON ignition switch and clear DTC using scan tool.
3) Start engine and warm up to normal operating temperature.
4) Run engine at idle speed for 1 min. or more.
5) Check DTC and pending DTC.

**DTC Troubleshooting**

**NOTE**

**Before this trouble shooting is performed, read the precautions for DTC troubleshooting referring to "Precautions For DTC Troubleshooting: ".**

| Step | Action | Yes | No |
|---|---|---|---|
| 1 | *Was "Engine and Emission Control System Check" performed?* | Go to Step 2. | Go to "Engine and Emission Control System Check: ". |
| 2 | *Is there DTC(s) other than A/F sensor?* | Go to applicable DTC diag. flow. | Go to Step 3. |
| 3 | **A/F sensor signal check**<br>1) Connect scan tool to DLC with ignition switch turned OFF.<br>2) Warm up engine to normal operating temperature and keep it at 2000 r/min. for 60 sec.<br>3) Repeat racing engine (Repeat depressing accelerator pedal 5 to 6 times continuously to enrich A/F mixture and take foot off from pedal to enlean it).<br>*Does A/F sensor output current between –0.2 mA and 0.2 mA?* | Intermittent trouble. Check for intermittent referring to "Intermittent and Poor Connection Inspection: in Section 00". | Go to Step 4. |
| 4 | **A/F sensor circuit check**<br>1) Disconnect connector from A/F sensor and ECM with ignition switch turned OFF.<br>2) Check for proper connection of each A/F sensor circuit terminal to A/F sensor connector and to ECM connector.<br>3) If connections are OK, check A/F sensor circuit for the following.<br>• Resistance of each sensing circuit wire of A/F sensor between A/F sensor connector and ECM connector is less than 2 Ω<br>• Resistance between sensing circuit wires of A/F sensor connector are infinity<br>• Resistance between each sensing circuit wire of A/F sensor connector and vehicle body ground is infinity<br>• Voltage of between each sensing circuit wire of A/F sensor connector and vehicle body ground is 0 V with ignition switch tuned ON<br>*Is it in good condition?* | Replace A/F sensor. | Repair or replace defective wire. |

## DTC P0133: O2 Sensor (HO2S) Circuit Slow Response (Sensor-1)

S5JB0A1104033

**Wiring Diagram**

Refer to "DTC P0131 / P0132 / P0134: O2 Sensor (HO2S) Circuit Low Voltage / High Voltage / No Activity Detected (Sensor-1): ".

www.cargeek.ir

www.CarGeek.ir


**A/F Sensor Description**

Refer to “A/F Sensor Description: ”.

**DTC Detecting Condition and Trouble Area**

| DTC detecting condition | Trouble area |
|---|---|
| Ratio between integrated value of A/F sensor output variation and integrated value of short term fuel trim variation is more than specification while vehicle is running constant speed and low engine load after warmed up.<br>(*2 driving cycle detection logic, monitoring once / 1 driving) | • A/F sensor<br>• Air intake system<br>• Exhaust system |

**DTC Confirmation Procedure**

**⚠ WARNING**

- **When performing a road test, select a place where there is no traffic or possibility of a traffic accident and be very careful during testing to avoid occurrence of an accident.**
- **Road test should be carried out by 2 persons, a driver and a tester, on a level road.**

**NOTE**

**Check to make sure that following conditions are satisfied when using this “DTC Confirmation Procedure”.**

- **Intake air temperature at engine start: –10 °C (14 °F) to 80 °C (176 °F)**
- **Intake air temperature: –10 °C (14 °F) to 70 °C (158 °F)**
- **Engine coolant temperature: 70 °C (158 °F) to 150 °C (302 °F)**
- **Altitude (barometric pressure): 2400 m, 8000 ft or less (560 mmHg, 75 kPa or more)**

1) With ignition switch turned OFF, connect scan tool.
2) Turn ON ignition switch and clear DTC using scan tool.
3) Start engine and warm up to normal operating temperature.
4) Drive vehicle at 40 mph (60 km/h) or higher. (engine speed: 2500 – 3000 r/min.)
5) Keep above vehicle speed for 6 min. or more. (Throttle valve opening is kept constant in this step.)
6) Release accelerator pedal and with engine brake applied, keep vehicle coasting (with fuel cut for 3 sec. or more) and then stop vehicle.
7) Check if DTC and pending DTC exist by using scan tool. If not, check if oxygen sensor monitoring test has been completed by using scan tool. If not in both of above checks (i.e., no DTC and pending DTC and oxygen sensor monitoring test not completed), check vehicle condition (environmental) and repeat Step 3) through 6).

**DTC Troubleshooting**

**NOTE**

**Before this trouble shooting is performed, read the precautions for DTC troubleshooting referring to “Precautions For DTC Troubleshooting: ”.**

| Step | Action | Yes | No |
|---|---|---|---|
| 1 | *Was “Engine and Emission Control System Check” performed?* | Go to Step 2. | Go to “Engine and Emission Control System Check: ”. |
| 2 | **DTC check**<br><br>*Is there DTC(s) other than P0133?* | Go to applicable DTC diagnosis flow. | Go to Step 3. |
| 3 | **Intake system and exhaust system for leakage check**<br><br>*Are intake system and exhaust system in good condition?* | Replace A/F sensor. | Repair or replace defective leakage parts. |

www.cargeek.ir

www.CarGeek.ir

## DTC P0137 / P0138: O2 Sensor (HO2S) Circuit Low Voltage / High Voltage (Sensor-2)

S5JB0A1104035

### Wiring Diagram

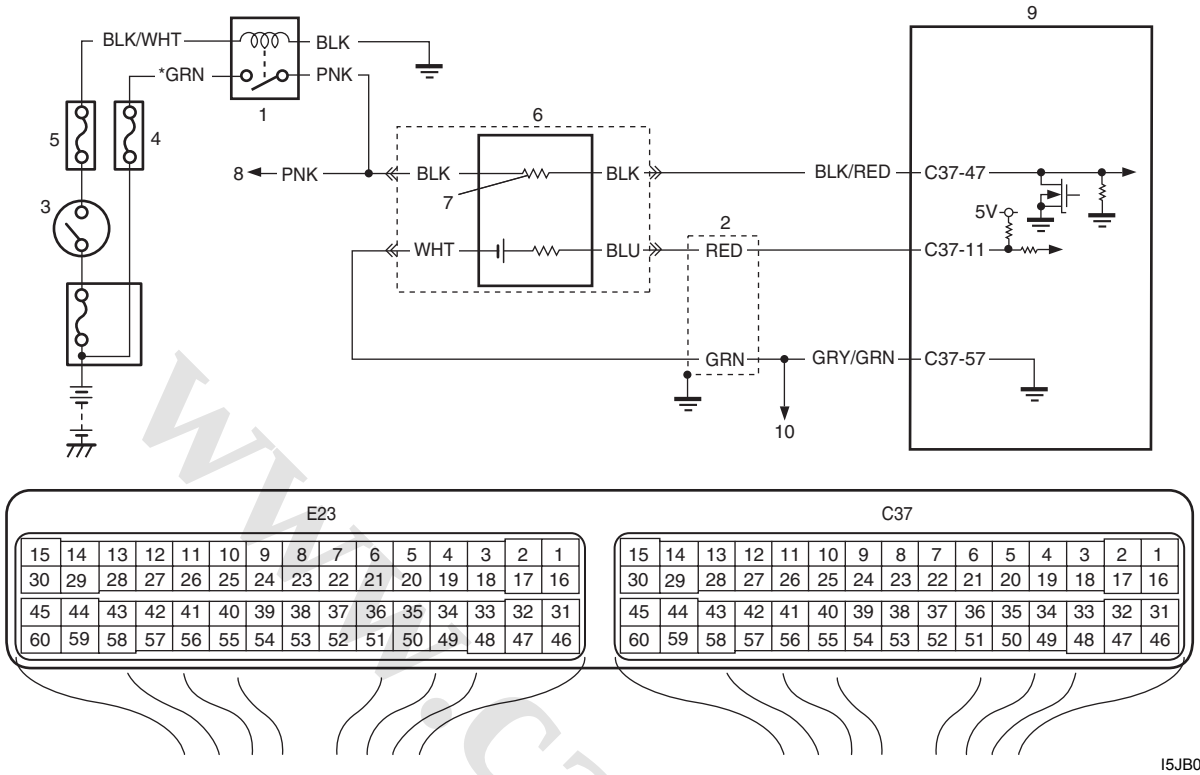


I5JB0A110045-01

| | | | |
|---|---|---|---|
| 1. HO2S heater relay | 4. "O2 HTR" fuse | 7. Heater | 10. To other sensors |
| 2. Shield wire | 5. "IG COIL" fuse | 8. To A/F sensor heater | *: For M16 engine |
| 3. Ignition switch | 6. HO2S-2 | 9. ECM | |

### DTC Detecting Condition and Trouble Area

| DTC detecting condition | Trouble area |
|---|---|
| **DTC P0137:**<br>HO2S-2 voltage is lower than 0.4 V for more than specified time continuously while vehicle is driving with high engine load (high speed). And HO2S-2 max. voltage minus HO2S-2 min. voltage is less than 0.2 V for specified time continuously.<br>(2 driving cycle detection logic)<br>**DTC P0138:**<br>HO2S-2 voltage is higher than 0.85 V for more than specified time continuously while vehicle is driving with high engine load (high speed). And HO2S-2 max. voltage minus HO2S-2 min. voltage is less than 0.2 V for specified time continuously.<br>(2 driving cycle detection logic) | • HO2S-2<br>• HO2S-2 circuit<br>• Fuel system<br>• ECM<br>• Fuel shortage<br>• Exhaust system<br>• Air intake system |

www.cargeek.ir

www.CarGeek.ir


### DTC Confirmation Procedure

**⚠ WARNING**

- **When performing a road test, select a place where there is no traffic or possibility of a traffic accident and be very careful during testing to avoid occurrence of an accident.**
- **Road test should be carried out by 2 persons, a driver and a tester, on a level road.**

**NOTE**

**Check to make sure that following conditions are satisfied when using this "DTC Confirmation Procedure".**

- **Intake air temperature at engine start: –10 °C (14 °F) to 80 °C (176 °F)**
- **Intake air temperature: –10 °C (14 °F) to 70 °C (158 °F)**
- **Engine Coolant temperature: 70 °C (158 °F) to 150 °C (302°F)**
- **Altitude (barometric pressure): 2400 m, 8000 ft or less (560 mmHg, 75 kPa or more)**

1) With ignition switch turned OFF, connect scan tool.
2) Turn ON ignition switch and clear DTC using scan tool.
3) Start engine and warm up to normal operating temperature.
4) Increase vehicle speed to 60 – 80 km/h (37 – 50 mile/h) at 5th gear or D range.
5) Release accelerator pedal and with engine brake applied, keep vehicle coasting (with fuel cut for 12 sec. or more), then stop vehicle and run engine at idle speed for 60 sec. or more.
6) Repeat Step 4).
7) Keep above vehicle speed for 8 min. or more. (Throttle valve opening is kept constant in this step.)
8) Repeat Step 5).
9) Check DTC and pending DTC.

### DTC Troubleshooting

**NOTE**

**Before this trouble shooting is performed, read the precautions for DTC troubleshooting referring to "Precautions For DTC Troubleshooting: ".**

| Step | Action | Yes | No |
|---|---|---|---|
| 1 | *Was "Engine and Emission Control System Check" performed?* | Go to Step 2. | Go to "Engine and Emission Control System Check: ". |
| 2 | *Is there DTC(s) other than fuel system (DTC P0171 / P0172) and HO2S-2 (DTC P0140)?* | Go to applicable DTC diag. flow. | Go to Step 3. |
| 3 | **HO2S-2 and its circuit check**<br>1) Connect scan tool to DLC with ignition switch turned OFF.<br>2) Warm up engine to normal operating temperature and keep it at 2000 r/min. for 60 sec.<br>3) Repeat racing engine (Repeat depressing accelerator pedal 5 to 6 times continuously to enrich A/F mixture and take foot off from pedal to enlean it).<br>*Does HO2S-2 output voltage indicate deflection between over 0.45 V and below 0.25 V?* | Go to "DTC P0171 / P0172 / P2195 / P2196: Fuel System Too Lean / Rich / Stuck Lean / Stuck Rich: ". | Go to Step 4. |

www.cargeek.ir

www.CarGeek.ir

| Step | Action | Yes | No |
|---|---|---|---|
| 4 | **HO2S-2 ground check**<br>1) Disconnect connector from HO2S-2 with ignition switch turned OFF.<br>2) Check for proper connection to HO2S-2 connector at “BLK/RED”, “RED”, “GRN” and “PNK” wire terminals.<br>3) If connections are OK, measure resistance between “GRN” wire terminal of HO2S-2 connector and engine ground.<br>*Is resistance less than 3 Ω?* | Go to Step 5. | “GRN” and/or “GRY/GRN” wire is open or high resistance circuit. Poor “C37-57” terminal connection. Faulty ECM ground.<br>If they are OK, substitute a known-good ECM and recheck. |
| 5 | **Wire circuit check**<br>1) Disconnect connectors from ECM with ignition switch turned OFF.<br>2) Measure resistance between “RED” wire terminal of HO2S-2 connector and “C37-11” terminal of ECM connector.<br>*Is resistance less than 3 Ω?* | Go to Step 6. | “RED” wire is high resistance circuit or open circuit. Poor “C37-11” terminal connection.<br>If they are OK, substitute a known-good ECM and recheck. |
| 6 | **Wire circuit check**<br>1) Measure resistance between “RED” wire terminal of HO2S-2 connector and vehicle body ground.<br>*Is resistance infinity?* | Go to Step 7. | “RED” wire is shorted to ground circuit. |
| 7 | **HO2S-2 signal circuit check**<br>1) Measure voltage between “RED” wire terminal of HO2S-2 connector and vehicle body ground with ignition switch turned ON.<br>*Is voltage 0 V?* | Go to Step 8. | “RED” wire is shorted to other circuit. |
| 8 | **HO2S-2 heater circuit check**<br>1) Check HO2S-2 heater circuit referring to “DTC P0037 / P0038: HO2S Heater Control Circuit Low / High (Sensor-2): ”.<br>*Is circuit in good condition?* | Go to Step 9. | Repair HO2S-2 circuit. |
| 9 | **Exhaust system check**<br>1) Check exhaust system for exhaust gas leakage.<br>*Is it OK?* | Go to Step 4 in “DTC P0171 / P0172 / P2195 / P2196: Fuel System Too Lean / Rich / Stuck Lean / Stuck Rich: ”.<br>If it is in good condition, go to Step 10. | Repair leakage of exhaust system. |
| 10 | **Air intake system check**<br>1) Check air intake system for clog or leak.<br>*Is it OK?* | Check HO2S-2 referring to “Heated Oxygen Sensor (HO2S-2) Heater On-Vehicle Inspection: in Section 1C”.<br>If it is in good condition, substitute a known-good ECM and recheck. | Repair or replace air intake system. |

www.cargeek.ir

www.CarGeek.ir


## DTC P0140: O2 Sensor (HO2S) Circuit No Activity Detected (Sensor-2)

S5JB0A1104036

### Wiring Diagram

Refer to “DTC P0137 / P0138: O2 Sensor (HO2S) Circuit Low Voltage / High Voltage (Sensor-2): ”.

### DTC Detecting Condition and Trouble Area

| DTC detecting condition | Trouble area |
|---|---|
| HO2S-2 voltage is higher than specified value after warming up engine (circuit open).<br>(2 driving cycle detection logic) | • HO2S-2<br>• HO2S-2 circuit<br>• ECM<br>• Exhaust gas leakage<br>• Air intake system |

### DTC Confirmation Procedure

**⚠ WARNING**

- **When performing a road test, select a place where there is no traffic or possibility of a traffic accident and be very careful during testing to avoid occurrence of an accident.**
- **Road test should be carried out by 2 persons, a driver and a tester, on a level road.**

1) With ignition switch turned OFF, connect scan tool.
2) Turn ON ignition switch and clear DTC using scan tool.
3) Start engine and warm up to normal operating temperature.
4) Increase vehicle speed to 60 – 80 km/h (37 – 50 mile/h) at 5th gear or D range.
5) Release accelerator pedal and with engine brake applied, keep vehicle coasting (with fuel cut for 4 sec. or more), then stop vehicle and run engine at idle speed for 60 sec. or more.
6) Check DTC and pending DTC.

### DTC Troubleshooting

**NOTE**

**Before this trouble shooting is performed, read the precautions for DTC troubleshooting referring to “Precautions For DTC Troubleshooting: ”.**

| Step | Action | Yes | No |
|---|---|---|---|
| 1 | *Was “Engine and Emission Control System Check” performed?* | Go to Step 2. | Go to “Engine and Emission Control System Check: ”. |
| 2 | **HO2S-2 ground check**<br>1) Disconnect connector from HO2S-2 with ignition switch turned OFF.<br>2) Check for proper connection to HO2S-2 connector at “PNK”, “BLK/RED”, “GRN” and “RED” wire terminals.<br>3) If connections are OK, measure resistance between “GRN” wire terminal of HO2S-2 connector and engine ground.<br>*Is resistance less than 3 Ω?* | Go to Step 3. | “GRN” and/or “GRY/GRN” wire is open or high resistance circuit. Poor “C37-57” terminal connection. Faulty ECM ground.<br>If they are OK, substitute a known-good ECM and recheck. |
| 3 | **Wire circuit check**<br>1) Disconnect connectors from ECM with ignition switch turned OFF.<br>2) Measure resistance between “RED” wire terminal of HO2S-2 connector and “C37-11” terminal of ECM connector.<br>*Is resistance less than 3 Ω?* | Go to Step 4. | “RED” wire is high resistance circuit or open circuit. Poor “C37-11” terminal connection.<br>If they are OK, substitute a known-good ECM and recheck. |

www.cargeek.ir

www.CarGeek.ir

| Step | Action | Yes | No |
|---|---|---|---|
| 4 | **HO2S-2 signal circuit check**<br>1) Turn ON ignition switch.<br>2) Measure voltage between “RED” wire terminal of HO2S-2 connector and vehicle body ground.<br>*Is voltage 0 V?* | Go to Step 5. | “RED” wire is shorted to other circuit. |
| 5 | **HO2S-2 heater circuit check**<br>1) Check HO2S-2 heater circuit referring to “DTC P0037 / P0038: HO2S Heater Control Circuit Low / High (Sensor-2): ”.<br>*Is circuit in good condition?* | Go to Step 6. | Repair HO2S-2 circuit. If circuit is OK, substitute a known-good ECM and recheck. |
| 6 | **HO2S-2 check**<br>1) Check HO2S-2 referring to “Heated Oxygen Sensor (HO2S-2) Heater On-Vehicle Inspection: in Section 1C”.<br>*Is it in good condition?* | Substitute a known-good ECM and recheck. | Replace HO2S-2. |

## DTC P0171 / P0172 / P2195 / P2196: Fuel System Too Lean / Rich / Stuck Lean / Stuck Rich

S5JB0A1104037

### Wiring Diagram

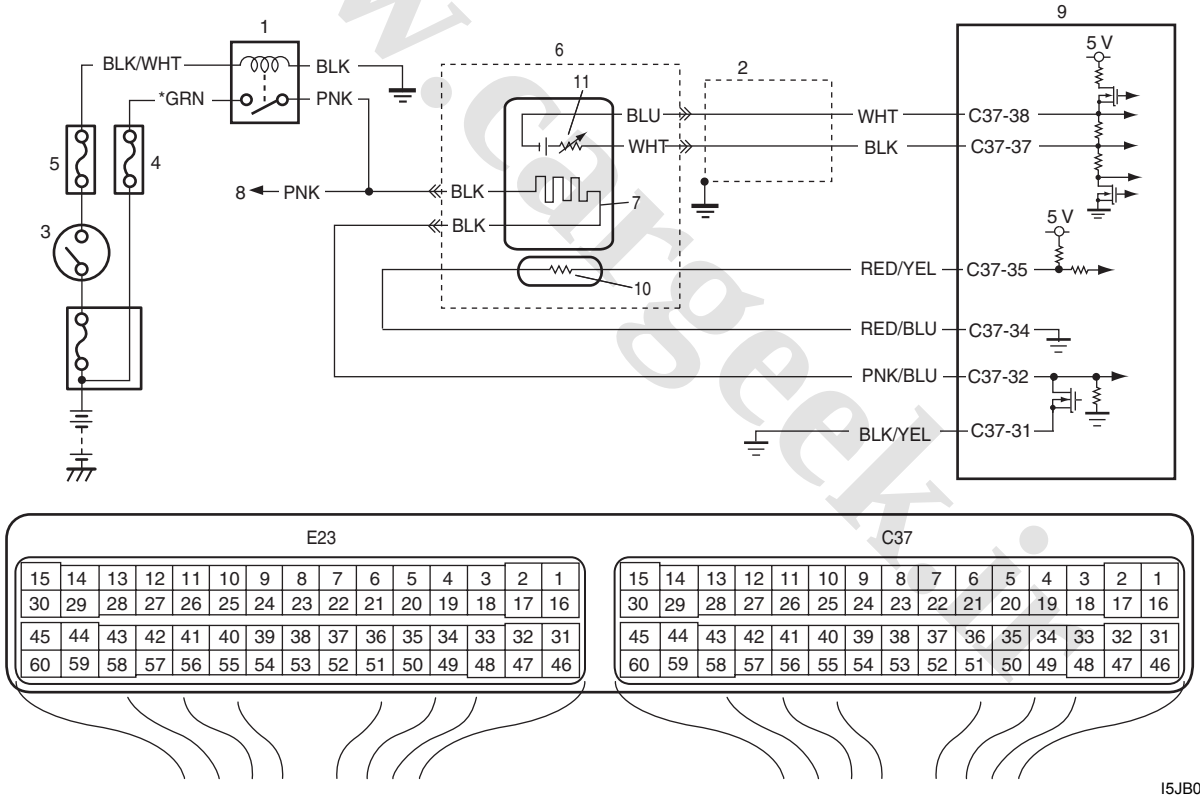


I5JB0A110044-02

| | | | |
|---|---|---|---|
| 1. HO2S heater relay | 4. “O2 HTR” fuse | 7. Heater | 10. Adjusting resistor |
| 2. Shield wire | 5. “IG COIL” fuse | 8. To HO2S-2 heater | 11. Sensor |
| 3. Ignition switch | 6. A/F sensor | 9. ECM | *: For M16 engine |

### A/F Sensor Description

Refer to “A/F Sensor Description: ”.

www.cargeek.ir

www.CarGeek.ir


**DTC Detecting Condition and Trouble Area**

| DTC detecting condition | Trouble area |
|---|---|
| **DTC P0171:**<br>Total fuel trim (short term fuel trim + long term fuel trim) is higher than specified range for 30 to 90 sec (depending on ECT) continuously.<br>(2 driving cycle detection logic)<br>**DTC P0172:**<br>Total fuel trim (short term fuel trim + long term fuel trim) is lower than specified range for 30 to 90 sec (depending on ECT) continuously.<br>(2 driving cycle detection logic)<br>**DTC P2195:**<br>A/F sensor output is lower than specification while vehicle is running constant speed and constant engine load after warmed up.<br>(2 driving cycle detection logic)<br>**DTC P2196:**<br>A/F sensor output is higher than specification while vehicle is running constant speed and constant engine load after warmed up.<br>(2 driving cycle detection logic) | • Vacuum leakage<br>• Exhaust gas leakage<br>• Fuel pressure out of specification<br>• Fuel injector malfunction<br>• A/F sensor malfunction<br>• MAF sensor malfunction<br>• ECT sensor malfunction |

**DTC Confirmation Procedure**

**⚠ WARNING**

- **When performing a road test, select a place where there is no traffic or possibility of a traffic accident and be very careful during testing to avoid occurrence of an accident.**
- **Road test should be carried out by 2 persons, a driver and a tester, on a level road.**

**NOTE**

**Check to make sure that following conditions are satisfied when using this "DTC Confirmation Procedure".**

- **Intake air temperature at engine start: –10 °C (14 °F) to 80 °C (176 °F)**
- **Intake air temperature: –10 °C (14 °F) to 70 °C (158 °F)**
- **Engine coolant temperature: 70 °C (158 °F) to 150 °C (302 °F)**
- **Altitude (barometric pressure): 2400 m, 8000 ft or less (560 mmHg, 75 kPa or more)**

1) With ignition switch turned OFF, connect scan tool.
2) Turn ON ignition switch and print Freeze Frame Data or write them down using scan tool.
3) Clear DTC using scan tool.
4) Start engine and warm up to normal operating temperature.
5) Operate vehicle with condition as noted freeze frame data for 5 min.
6) Stop vehicle and check DTC and pending DTC.

www.cargeek.ir

www.CarGeek.ir

## DTC Troubleshooting

**NOTE**

**Before this trouble shooting is performed, read the precautions for DTC troubleshooting referring to "Precautions For DTC Troubleshooting: ".**

| Step | Action | Yes | No |
|---|---|---|---|
| 1 | *Was "Engine and Emission Control System Check" performed?* | Go to Step 2. | Go to "Engine and Emission Control System Check: ". |
| 2 | *Is there DTC(s) other than fuel system (DTC P0171 / P0172 / 2195 / 2196)?* | Go to applicable DTC diag. flow. | Go to Step 3. |
| 3 | **Intake system and exhaust system for leakage check**<br>*Are intake system and exhaust system in good condition?* | Go to Step 4. | Repair or replace defective part. |
| 4 | **Fuel pressure check**<br>1) Check fuel pressure referring to "Fuel Pressure Check: ".<br>*Is check result satisfactory?* | Go to Step 5. | Repair or replace defective part. |
| 5 | **Fuel injectors and its circuit check**<br>1) Check fuel injectors referring to "Fuel Injector Inspection: in Section 1G".<br>*Is check result satisfactory?* | Go to Step 6. | Faulty injector(s) or its circuit. |
| 6 | **Visual inspection**<br>1) Check MAF sensor and air intake system.<br>• Objects which block measuring duct and resistor of MAF sensor.<br>• Other air flow which does not pass MAF sensor.<br>*Are they in good condition?* | Go to Step 7. | Repair or replace defective part. |
| 7 | **MAF sensor for performance check**<br>1) With ignition switch turned OFF, connect scan tool to DLC.<br>2) Start engine and warm up to normal operating temperature.<br>3) Check MAF value using scan tool (Refer to "Scan Tool Data: " for normal value.).<br>*Is each value within specified range?* | Go to Step 8. | Go to "DTC P0101: Mass Air Flow Circuit Range / Performance: ". |
| 8 | **ECT sensor for performance check**<br>1) Check ECT sensor performance referring to Step 2 to 4 and 11 of "DTC P0116: Engine Coolant Temperature Circuit Range / Performance: ".<br>*Is check result satisfactory?* | Go to Step 9. | Faulty ECT sensor or its circuit. |

www.cargeek.ir

www.CarGeek.ir


| Step | Action | Yes | No |
|---|---|---|---|
| 9 | **A/F sensor adjusting resistor power /ground circuit check**<br>1) Disconnect connector from A/F sensor with ignition switch turned OFF.<br>2) Check for proper connection to A/F sensor connector.<br>3) If connections are OK, check A/F sensor adjusting resistor circuit for the following.<br>• ECM 5 V power is applied to A/F sensor adjusting resistor circuit at A/F sensor connector (power circuit check)<br>• Resistance between ground to ECM for A/F sensor adjusting resistor circuit and vehicle body ground is less than 1 Ω at A/F sensor connector (ground circuit check)<br>*Is it in good condition?* | Go to step 11. | Go to Step 10. |
| 10 | **A/F sensor adjusting resistor circuit check**<br>1) Disconnect connector from ECM with ignition switch turned OFF.<br>2) Check for proper connection of each A/F sensor circuit terminal to ECM connector.<br>3) If connections are OK, check A/F sensor adjusting resistor circuit for the following.<br>• Resistance of each A/F sensor adjusting resistor circuit wire between A/F sensor connector and ECM connector is less than 3 Ω (continuity check)<br>• Resistance between A/F sensor adjusting resistor circuit wires are infinity (no continuity check)<br>• Resistance between each A/F sensor adjusting resistor circuit wire and vehicle body ground is infinity (ground short check)<br>• Voltage between each A/F sensor adjusting resistor circuit wire and vehicle body ground is 0 V with ignition switch tuned ON (power short check)<br>*Is it in good condition?* | Substitute a known good ECM and recheck. | Repair or replace defective circuit. |
| 11 | **A/F sensor adjusting resistor check**<br>1) 1)Check for resistance of A/F sensor adjusting resistor referring to “Air Fuel Ratio (A/F) Sensor On-Vehicle Inspection: in Section 1C”.<br>*Is check result satisfactory?* | Go to Step 12. | Replace A/F sensor. |
| 12 | **A/F sensor for performance check**<br>1) Check A/F sensor referring to Step 3 and 4 of “DTC P0131 / P0132 / P0134: O2 Sensor (HO2S) Circuit Low Voltage / High Voltage / No Activity Detected (Sensor-1): ”.<br>*Is check result satisfactory?* | Replace A/F sensor. | Repair or replace defective circuit. |

www.cargeek.ir

www.CarGeek.ir

## DTC P0222: Throttle Position Sensor (Sub) Circuit Low

S5JB0A1104075

### Wiring Diagram

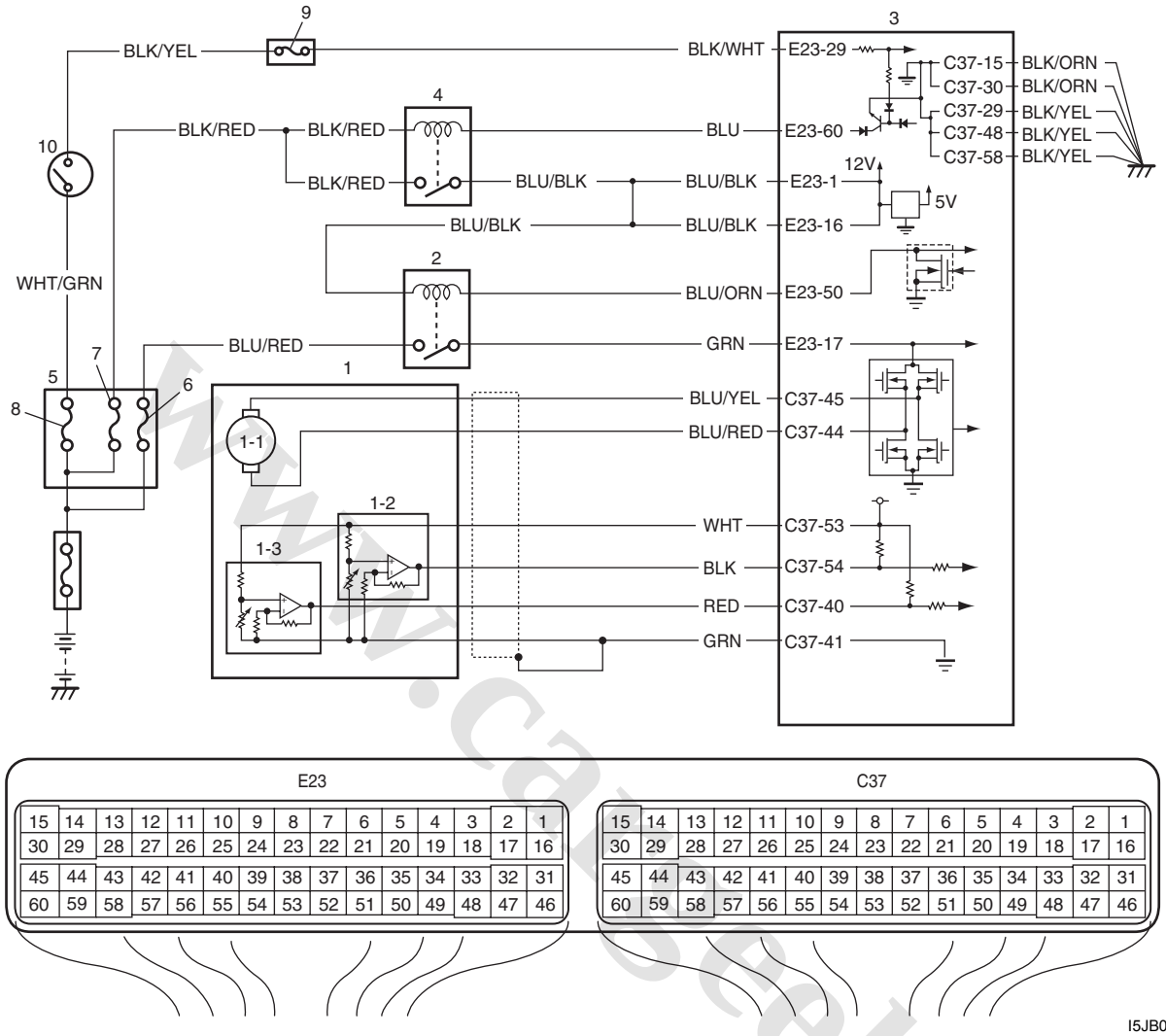


I5JB0A110041-01

| | | |
|---|---|---|
| 1. Electric throttle body assembly | 3. ECM | 8. “IGN” fuse |
| 1-1. Throttle actuator | 4. Main relay | 9. “IG COIL” fuse |
| 1-2. Throttle position sensor (main) | 5. Fuse box No.2 | 10. Ignition switch |
| 1-3. Throttle position sensor (sub) | 6. “THR MOT” fuse | |
| 2. Throttle actuator control relay | 7. “FI” fuse | |

### DTC Detecting Condition and Trouble Area

| DTC detecting condition | Trouble area |
|---|---|
| Output voltage of throttle position sensor (sub) is less than specified value for specified time continuously.<br>(1 driving detection logic) | • Throttle position sensor (sub) circuit<br>• Electric throttle body assembly<br>• ECM |

**NOTE**

**When DTC P0122 and P0222 are indicated together, it is possible that “WHT” wire open circuit.**

www.cargeek.ir

www.CarGeek.ir


**DTC Confirmation Procedure**

1) With ignition switch turned OFF, connect scan tool.
2) Turn ON ignition switch and clear DTC using scan tool.
3) Keep the accelerator pedal at idle position for 2 seconds.
4) Keep the accelerator pedal at fully depressed position for 2 seconds.
5) Repeat Step 3) and 4) for 3 times.
6) Check DTC.

**DTC Troubleshooting**

**NOTE**

**Before this trouble shooting is performed, read the precautions for DTC troubleshooting referring to "Precautions For DTC Troubleshooting: ".**

| Step | Action | Yes | No |
|---|---|---|---|
| 1 | *Was "Engine and Emission Control System Check" performed?* | Go to Step 2. | Go to "Engine and Emission Control System Check: ". |
| 2 | **Throttle position sensor and its circuit check**<br>1) Connect scan tool to DLC with ignition switch turned OFF.<br>2) Turn ON ignition switch, check "TP Sensor 2 Volt" displayed on scan tool when accelerator pedal is idle position and fully depressed.<br>*Is displayed TP sensor value as described voltage in "Scan Tool Data: "?* | Intermittent trouble.<br>Check for intermittent referring to "Intermittent and Poor Connection Inspection: in Section 00". | Go to Step 3. |
| 3 | **ECM voltage check**<br>1) Disconnect connector from electric throttle body assembly with ignition switch turned OFF.<br>2) Check for proper connection to electric throttle body assembly at "RED", "WHT" and "GRN" wire terminals.<br>**For J20 engine**<br> 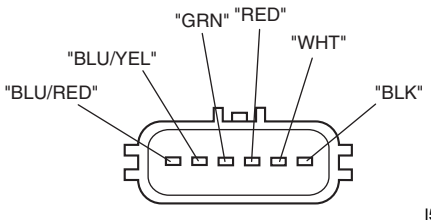 <br><br>I5JB0A110042-01<br>**For M16 engine**<br> 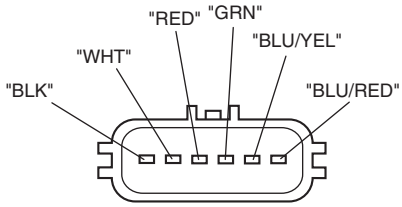 <br><br>I5JB0A110043-01<br>3) If OK, measure voltage between "WHT" wire terminal of electric throttle body assembly connector and engine ground with ignition switch turned ON.<br>*Is voltage 4 – 6 V?* | Go to Step 5. | Go to Step 4. |

www.cargeek.ir

www.CarGeek.ir

| Step | Action | Yes | No |
|---|---|---|---|
| 4 | **ECM voltage check**<br>1) Turn OFF ignition switch.<br>2) Remove ECM from its bracket with ECM connectors connected.<br>3) Check for proper connection of ECM connector at “C37-53” terminal.<br>4) If OK, measure voltage between “C37-53” terminal of ECM connector and engine ground with ignition switch turned ON.<br>*Is voltage 4 – 6 V?* | “WHT” wire is open or high resistance circuit. | Go to Step 5. |
| 5 | **Wire harness check**<br>1) Measure voltage between “RED” wire terminal of electric throttle body assembly connector and engine ground with ignition switch turned ON.<br>*Is voltage 4 – 6 V?* | Go to Step 8. | Go to Step 6. |
| 6 | **Wire harness check**<br>1) Disconnect connectors from ECM with ignition switch turned OFF.<br>2) Check for proper connection of ECM connector at “C37-40” and “C37-41” terminals.<br>3) If OK, measure resistance between “RED” and “GRN” wire terminals of electric throttle body assembly connector.<br>*Is resistance infinity?* | Go to Step 7. | “RED” wire is shorted to “GRN” wire. |
| 7 | **Wire harness check**<br>1) Measure resistance between “RED” wire terminal of electric throttle body assembly connector and engine ground with ignition switch turned OFF.<br>*Is resistance infinity?* | Substitute a known-good ECM and recheck. | “RED” wire is shorted to ground circuit. |
| 8 | **Electric throttle body assembly check**<br>1) Check throttle position sensor referring to “Throttle Position Sensor Performance Check” under “Electric Throttle Body Assembly On-Vehicle Inspection: in Section 1C”.<br>*Is output voltage within specified value?* | Substitute a known-good ECM and recheck. | Replace electric throttle body assembly. |

www.cargeek.ir

www.CarGeek.ir


## DTC P0223: Throttle Position Sensor (Sub) Circuit High

S5JB0A1104076

### Wiring Diagram

Refer to “DTC P0222: Throttle Position Sensor (Sub) Circuit Low: ”.

### DTC Detecting Condition and Trouble Area

| DTC detecting condition | Trouble area |
|---|---|
| Output voltage of throttle position sensor (sub) is more than specified value for specified time continuously.<br>(1 driving detection logic) | • Throttle position sensor (sub) circuit<br>• Electric throttle body assembly<br>• ECM |

**NOTE**

**When DTC P0123 and P0223 are indicated together, it is possible that “WHT” wire shorted to power circuit and/or “GRN” wire open.**

### DTC Confirmation Procedure

1) With ignition switch turned OFF, connect scan tool.
2) Turn ON ignition switch and clear DTC using scan tool.
3) Keep the accelerator pedal at idle position for 2 seconds.
4) Keep the accelerator pedal at fully depressed position for 2 seconds.
5) Repeat Step 3) and 4) for 3 times.
6) Check DTC.

### DTC Troubleshooting

**NOTE**

**Before this trouble shooting is performed, read the precautions for DTC troubleshooting referring to “Precautions For DTC Troubleshooting: ”.**

| Step | Action | Yes | No |
|---|---|---|---|
| 1 | *Was “Engine and Emission Control System Check” performed?* | Go to Step 2. | Go to “Engine and Emission Control System Check: ”. |
| 2 | **Throttle position sensor and its circuit check**<br>1) Connect scan tool to DLC with ignition switch turned OFF.<br>2) Turn ON ignition switch, check “TP Sensor 2 Volt” displayed on scan tool when accelerator pedal is idle position and fully depressed.<br>*Is displayed TP sensor value as described voltage in “Scan Tool Data: ”?* | Intermittent trouble.<br>Check for intermittent referring to “Intermittent and Poor Connection Inspection: in Section 00”. | Go to Step 3. |

www.cargeek.ir

www.CarGeek.ir

| Step | Action | Yes | No |
|---|---|---|---|
| 3 | **ECM voltage check**<br>1) Disconnect connector from electric throttle body assembly with ignition switch turned OFF.<br>2) Check for proper connection to electric throttle body assembly at “RED”, “WHT” and “GRN” wire terminals.<br>**For J20 engine**<br> 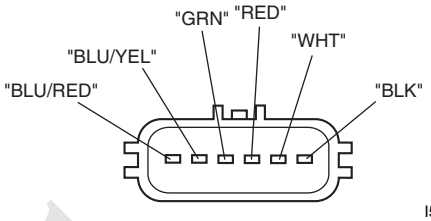 <br><br>I5JB0A110042-01<br>**For M16 engine**<br> 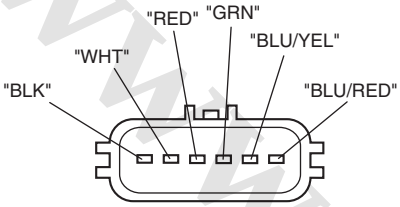 <br><br>I5JB0A110043-01<br>3) If OK, measure voltage between “WHT” wire terminal of electric throttle body assembly connector and engine ground with ignition switch turned ON.<br>*Is voltage 4 – 6 V?* | Go to Step 5. | Go to Step 4. |
| 4 | **Wire harness check**<br>1) Disconnect connectors from ECM with ignition switch turned OFF.<br>2) Check for proper connection of ECM connector at “C37-53” terminal.<br>3) Measure voltage between “C37-53” terminal of ECM connector and engine ground with ignition switch turned ON.<br>*Is voltage 0 V?* | Substitute a known-good ECM and recheck. | “WHT” wire is shorted to power circuit. |
| 5 | **Wire harness check**<br>1) Measure voltage between “RED” wire terminal of electric throttle body assembly connector and engine ground with ignition switch turned ON.<br>*Is voltage 4 – 6 V?* | Go to Step 9. | Go to Step 6. |
| 6 | **Wire harness check**<br>1) Turn OFF ignition switch.<br>2) Remove ECM from its bracket with ECM connectors connected.<br>3) Check for proper connection of ECM connector at “C37-53” and “C37-40” terminals.<br>4) If OK, measure voltage between “C37-40” terminal of ECM connector and engine ground with ignition switch turned ON.<br>*Is voltage 4 – 6 V?* | “RED” wire is open or high resistance circuit. | Go to Step 7. |

www.cargeek.ir

www.CarGeek.ir


| Step | Action | Yes | No |
|---|---|---|---|
| 7 | **Wire harness check**<br>1) Disconnect connectors from ECM with ignition switch turned OFF.<br>2) Measure resistance between “WHT” and “RED” wire terminals of electric throttle body assembly connector.<br>*Is resistance infinity?* | Go to Step 8. | “RED” wire is shorted to “WHT” wire. |
| 8 | **Wire harness check**<br>1) Turn ON ignition switch.<br>2) Measure voltage between “C37-40” terminal of ECM connector and engine ground.<br>*Is voltage 0 V?* | Substitute a known-good ECM and recheck. | “RED” wire is shorted to power circuit. |
| 9 | **Ground circuit check**<br>1) Turn OFF ignition switch.<br>2) Measure resistance between “GRN” wire terminal of electric throttle body assembly connector and engine ground.<br>*Is resistance below 3 Ω?* | Go to Step 11. | Go to Step 10. |
| 10 | **Ground circuit check**<br>1) Remove ECM from its bracket with ECM connectors connected.<br>2) Check for proper connection of ECM connector at “C37-41” terminal.<br>3) Measure resistance between “C37-41” terminal of ECM connector and engine ground with ignition switch turned OFF.<br>*Is resistance below 3 Ω?* | “GRN” wire is open or high resistance circuit. | Faulty ECM ground circuit. If circuit is OK, substitute a known-good ECM and recheck. |
| 11 | **Electric throttle body assembly check**<br>1) Check throttle position sensor referring to “Throttle Position Sensor Performance Check” under “Electric Throttle Body Assembly On-Vehicle Inspection: in Section 1C”.<br>*Is output voltage within specified value?* | Substitute a known-good ECM and recheck. | Replace electric throttle body assembly. |

www.cargeek.ir
www.cargeek.ir

www.CarGeek.ir

## DTC P0300 / P0301 / P0302 / P0303 / P0304: Random Misfire Detected / Cylinder 1 / Cylinder 2 / Cylinder 3 / Cylinder 4 Misfire Detected

S5JB0A1104038

### System Description

ECM measures the angle of the crankshaft based on the pulse signal from the CKP sensor and CMP sensor for each cylinder. If it detects a large change in the angle speed of the crankshaft, it concludes occurrence of a misfire. When the number of misfire is counted by ECM beyond the DTC detecting condition, it determines the cylinder where the misfire occurred and output it as DTC.

### DTC Detecting Condition and Trouble Area

| DTC detecting condition | Trouble area |
|---|---|
| **DTC P0300:**<br>• Misfire, which causes catalyst to overheat during 200 engine revolutions, is detected at 2 or more cylinders. (MIL flashes as long as this misfire occurs continuously.)<br>or<br>• Misfire, which affects exhaust emission adversely during 1000 engine revolution, is detected at 2 or more cylinders. (2 driving cycle detection logic) | • Ignition system<br>• Fuel injector and its circuit<br>• Fuel pressure<br>• EGR system<br>• Abnormal air drawn in<br>• Engine compression<br>• Valve lash adjuster<br>• Valve timing<br>• Fuel shortage<br>• Exhaust system<br>• Fuel of poor quality |
| **DTC P0301, P0302, P0303, P0304:**<br>• Misfire, which causes catalyst to overheat during 200 engine revolutions, is detected at 1 cylinder. (MIL flashes as long as this misfire occurs continuously.)<br>or<br>• Misfire, which affects exhaust emission adversely during 1000 engine revolution, is detected at 1 cylinder. (2 driving cycle detection logic) | |

### DTC Confirmation Procedure

**⚠ WARNING**

- **When performing a road test, select a place where there is no traffic or possibility of a traffic accident and be very careful during testing to avoid occurrence of an accident.**
- **Road test should be carried out by 2 persons, a driver and a tester, on a level road.**

**NOTE**

**Check to make sure that following conditions are satisfied when using this "DTC Confirmation Procedure".**

- **Intake air temperature at engine start: –10 °C (14 °F) to 80 °C (176 °F)**
- **Intake air temperature: –10 °C (14 °F) to 70 °C (158 °F)**
- **Engine coolant temperature: –10 °C (14 °F) to 150 °C (302 °F)**
- **Altitude (barometric pressure): 2400 m, 8000 ft or less (560 mmHg, 75 kPa or more)**

1) With ignition switch turned OFF, connect scan tool.
2) Turn ON ignition switch and print Freeze Frame Data or write them down using scan tool.
3) Clear DTC using scan tool.
4) Drive vehicle under freeze frame data condition as noted for 1 min. or more.
5) Stop vehicle and check DTC and pending DTC.

### DTC Troubleshooting

**NOTE**

**Before this trouble shooting is performed, read the precautions for DTC troubleshooting referring to "Precautions For DTC Troubleshooting: ".**

| Step | Action | Yes | No |
|---|---|---|---|
| 1 | *Was "Engine and Emission Control System Check" performed?* | Go to Step 2. | Go to "Engine and Emission Control System Check: ". |

www.cargeek.ir

www.CarGeek.ir


| Step | Action | Yes | No |
|---|---|---|---|
| 2 | *Does fuel level meter indicate "E" level (empty)?* | Add fuel and recheck. | Go to Step 3. |
| 3 | **Fuel quality check**<br>1) Check that there is fuel of good quality in the fuel tank.<br>*Is it OK?* | Go to Step 4. | Clean in fuel system circuit and change fuel. |
| 4 | **Ignition system check**<br>1) Check spark plug and ignition spark of cylinder where misfire occurs, referring to "Spark Plug Inspection: in Section 1H" and "Ignition Spark Test: in Section 1H".<br>*Are they in good condition?* | Go to Step 5. | Faulty ignition coil, wire harness, spark plug or other system parts. |
| 5 | **Fuel injector circuit check**<br>1) Using sound scope, check each injector operating sound at engine cranking or idling.<br>*Do all injectors make operating sound?* | Go to Step 6. | Check coupler connection and wire harness of injector not making operating sound and injector itself. If OK, substitute a known-good ECM and recheck. |
| 6 | **Fuel pressure check**<br>1) Check fuel pressure referring to "Fuel Pressure Check: ".<br>*Is check result satisfactory?* | Go to Step 7. | Repair or replace fuel system. |
| 7 | **Fuel injector check**<br>1) Check fuel injector(s) referring to "Fuel Injector Inspection: in Section 1G".<br>*Is check result satisfactory?* | Go to Step 8. | Replace defective injector. |
| 8 | **Ignition timing check**<br>1) Check ignition timing referring to "Ignition Timing Inspection: in Section 1H".<br>*Is check result satisfactory?* | Go to Step 9. | Check related sensors. |
| 9 | **EGR system check**<br>1) Check EGR system referring to "EGR System Inspection: in Section 1B".<br>*Is check result satisfactory?* | Go to Step 10. | Repair or replace EGR system. |
| 10 | **Exhaust system check**<br>1) Check exhaust system for exhaust gas clogged.<br>*Is it OK?* | Go to Step 11. | Repair clogged of exhaust system. |
| 11 | **Engine mechanical system check**<br>1) Check engine mechanical parts or system which can cause engine rough idle or poor performance.<br>• Engine compression (Refer to "Compression Check: For J20 Engine in Section 1D" or "Compression Check: For M16A Engine with VVT in Section 1D".)<br>• Valve lash (Refer to "Valve Lash (Clearance) Inspection: For J20 Engine in Section 1D" or "Valve Lash (Clearance) Inspection: For M16A Engine with VVT in Section 1D".)<br>• Valve timing (Refer to "2nd Timing Chain and Chain Tensioner Removal and Installation: For J20 Engine in Section 1D" or "Timing Chain and Chain Tensioner Removal and Installation: For M16A Engine with VVT in Section 1D".)<br>*Are they in good condition?* | Check wire harness and connection of ECM ground, ignition system and fuel injector for intermittent open and short. | Repair or replace defective part. |

www.cargeek.ir

www.CarGeek.ir

## DTC P0327 / P0328: Knock Sensor Circuit Low / High

S5JB0A1104039

### Wiring Diagram

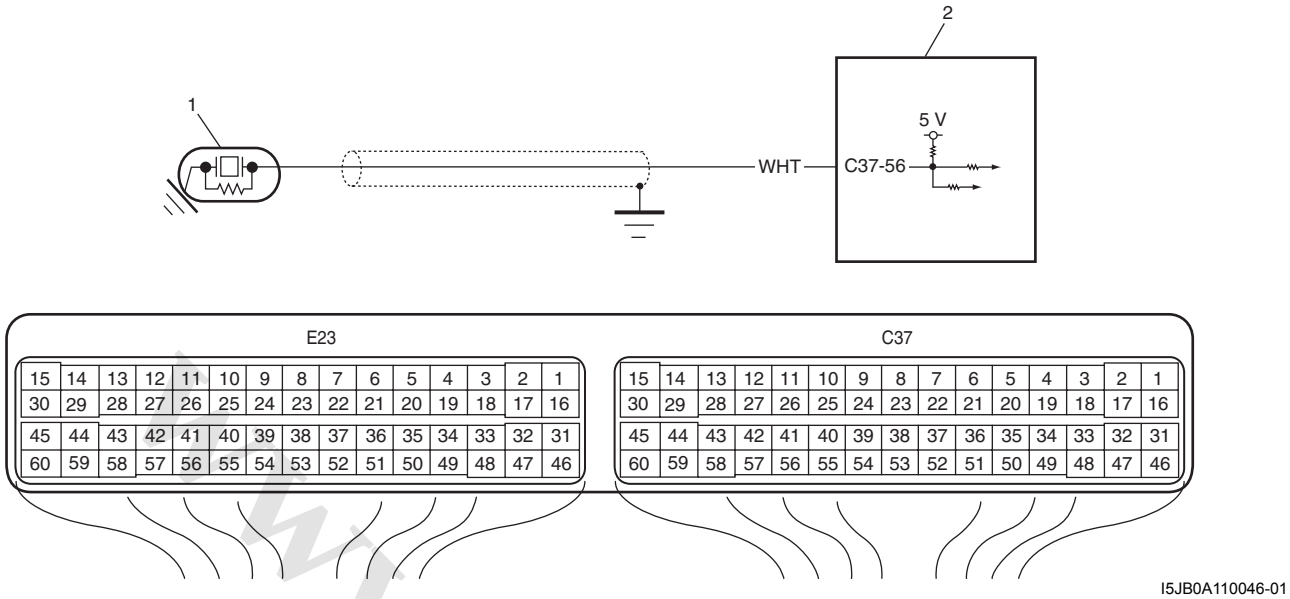


| | |
|---|---|
| 1. | Knock sensor |
| 2. | ECM |

### DTC Detecting Condition and Trouble Area

| DTC detecting condition | Trouble area |
|---|---|
| DTC will be set when all of following conditions are detected for 0.5 seconds continuously.<br>**DTC P0327:**<br>• Engine is running<br>• Voltage of knock sensor is less than 1.23 V<br>(1 driving cycle detection logic)<br>**DTC P0328:**<br>• Engine is running<br>• Voltage of knock sensor is 3.91 V or more<br>(1 driving cycle detection logic) | • Knock sensor circuit (open or short)<br>• Knock sensor<br>• ECM |

### DTC Confirmation Procedure

1) Connect scan tool to DLC with ignition switch turned OFF.
2) Turn ON ignition switch and clear DTC, pending DTC and freeze frame data by using scan tool.
3) Start engine and run it for 10 sec.
4) Check DTC by using scan tool.

### DTC Troubleshooting

**NOTE**

**Before this trouble shooting is performed, read the precautions for DTC troubleshooting referring to “Precautions For DTC Troubleshooting: ”.**

www.cargeek.ir

www.CarGeek.ir


| Step | Action | Yes | No |
|---|---|---|---|
| 1 | *Was "Engine and Emission Control System Check" performed?* | Go to Step 2. | Go to "Engine and Emission Control System Check: ". |
| 2 | **Knock sensor circuit check**<br>1) Remove ECM from its bracket with ECM connectors connected.<br>2) Measure voltage between "C37-56" terminal of ECM connector and vehicle body ground with engine running.<br>*Is voltage within 1.23 – 3.91 V?* | Intermittent trouble. Check for intermittent referring to "Intermittent and Poor Connection Inspection: in Section 00". If OK, substitute a known-good ECM and recheck. | Go to Step 3. |
| 3 | **Knock sensor circuit for open check**<br>1) Disconnect connector from knock sensor with ignition switch turned OFF.<br>2) Turn ON ignition switch, measure voltage between "WHT" wire of knock sensor connector and engine ground.<br> 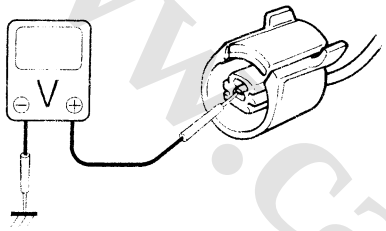 <br>I2RH01110089-01<br>*Is voltage 4 – 6 V?* | Go to Step 6. | Go to Step 4. |
| 4 | **Knock sensor circuit for open check**<br>1) Turn ON ignition switch, measure voltage between "C37-56" terminal of ECM connector and engine ground<br>*Is voltage 4 – 6 V?* | "WHT" wire is open circuit. | Go to Step 5. |
| 5 | **Knock sensor circuit for short check**<br>1) Disconnect connectors from ECM with ignition switch turned OFF.<br>2) Measure resistance between "C37-56" terminal of ECM connector and vehicle body ground.<br>*Is resistance infinity?* | Go to Step 6. | "WHT" wire is shorted to ground circuit.<br>If wire is OK, substitute a known-good ECM and recheck. |
| 6 | **Knock sensor circuit for short check**<br>1) Disconnect connectors from ECM with ignition switch turned OFF.<br>2) Turn ON ignition switch, measure voltage between "C37-56" terminal of ECM connector and vehicle body ground.<br>*Is voltage 0 V?* | Go to Step 7. | "WHT" wire is shorted to other circuit. |
| 7 | **Knock sensor circuit for high resistance check**<br>1) Turn OFF ignition switch, measure resistance between "C37-56" terminal of ECM connector and "RED" wire terminal of knock sensor harness connector.<br>*Is resistance below 5 Ω?* | Faulty knock sensor. | "WHT" wire is high resistance circuit. |

www.cargeek.ir

www.CarGeek.ir

## DTC P0335: Crankshaft Position (CKP) Sensor Circuit (For J20 Engine)

S5JB0A1104089

### Wiring Diagram

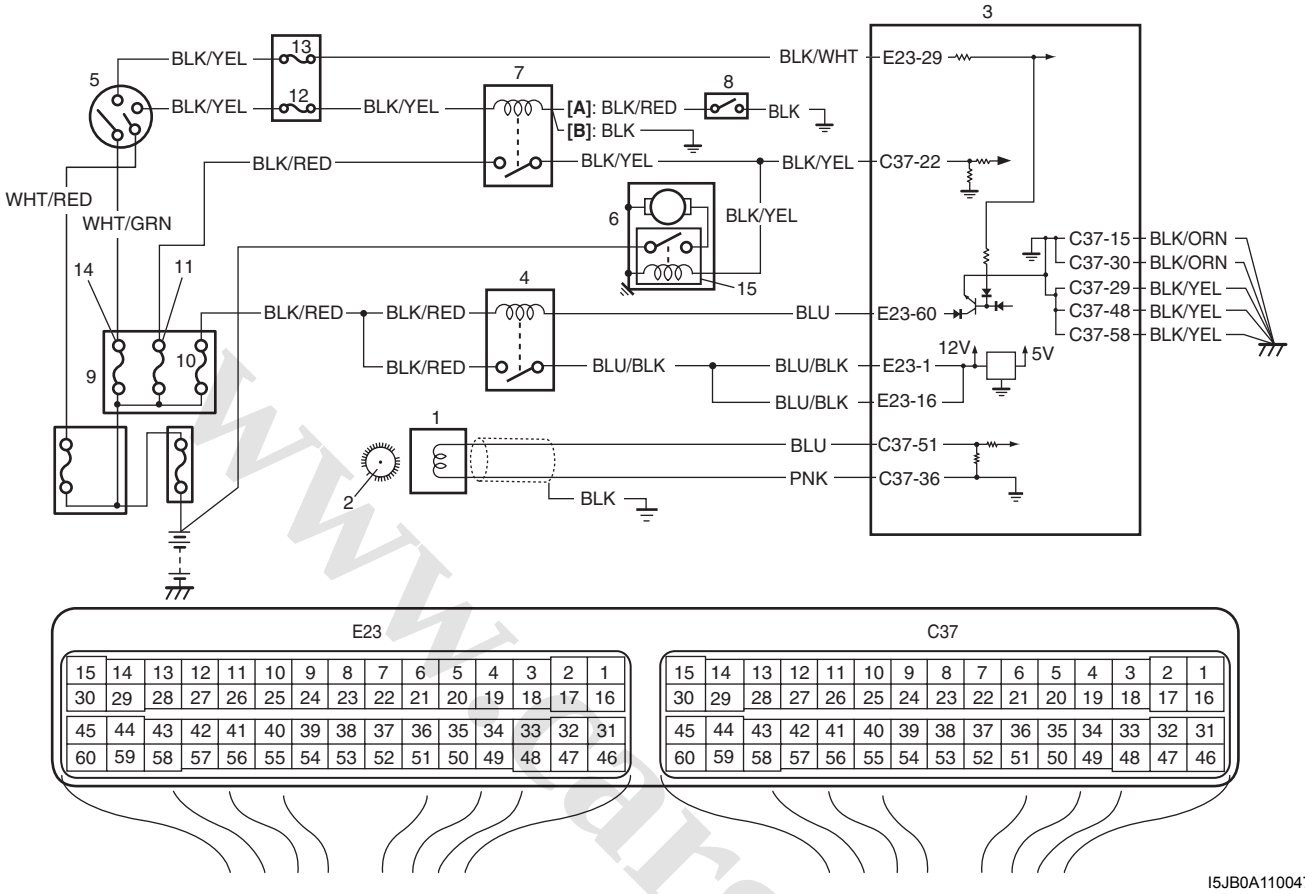


I5JB0A110047-02

| | | |
|---|---|---|
| [A]: For A/T model | 5. Ignition switch | 11. "ST" fuse |
| [B]: For M/T model | 6. Starting motor | 12. "ST SIG" fuse |
| 1. CKP sensor | 7. Starting motor control relay | 13. "IG COIL" fuse |
| 2. Sensor plate on crankshaft | 8. Transmission range switch (for A/T model) | 14. "IGN" fuse |
| 3. ECM | 9. Fuse box No.2 | 15. Starting motor magnet clutch |
| 4. Main relay | 10. "FI" fuse | |

### DTC Detecting Condition and Trouble Area

| DTC detecting condition | Trouble area |
|---|---|
| No CKP sensor signal for 2 sec. even if starting motor signal is inputted at engine cranking.<br>(1 driving cycle detection logic) | • CKP sensor circuit open or short<br>• Sensor plate teeth damaged<br>• CKP sensor malfunction, foreign material being attached or improper installation<br>• ECM<br>• Engine start signal circuit malfunction |

### DTC Confirmation Procedure

1) With ignition switch turned OFF, connect scan tool.
2) Turn ON ignition switch and clear DTC using scan tool.
3) Crank engine for 3 – 5 sec.
4) Check DTC and pending DTC.

www.cargeek.ir

www.CarGeek.ir


## DTC Troubleshooting

**NOTE**

**Before this trouble shooting is performed, read the precautions for DTC troubleshooting referring to "Precautions For DTC Troubleshooting: ".**

| Step | Action | Yes | No |
|---|---|---|---|
| 1 | *Was "Engine and Emission Control System Check" performed?* | Go to Step 2. | Go to "Engine and Emission Control System Check: ". |
| 2 | **CKP sensor and connector for proper installation check**<br>*Is CKP sensor installed properly and connector connected securely?* | Go to Step 3. | Correct. |
| 3 | **Wire circuit check**<br>1) Disconnect connector from CKP sensor with ignition switch turned OFF.<br>2) Check for proper connection to CKP sensor at "PNK" and "BLU" wire terminals.<br>3) If OK, measure voltage between engine ground and each "PNK" and "BLU" wire terminals of CKP sensor connector with ignition switch turned ON.<br>*Is each voltage 0 V?* | Go to Step 4. | "PNK" wire and/or "BLU" wire is shorted to other circuit. |
| 4 | **Wire circuit check**<br>1) Disconnect connectors from ECM with ignition switch turned OFF.<br>2) Check for proper connection to ECM at "C37-36" and "C37-51" terminals.<br>3) If OK, measure resistance between engine ground and each "C37-36" and "C37-51" terminals of ECM connector.<br>*Is each resistance infinity?* | Go to Step 5. | "PNK" wire and/or "BLU" wire is shorted to ground circuit. |
| 5 | **Wire circuit check**<br>1) Measure resistance at following connector terminals.<br>• Between "C37-51" terminal of ECM connector and "BLU" wire terminal of CKP sensor connector<br>• Between "C37-36" terminal of ECM connector and "PNK" wire terminal of CKP sensor connector<br>*Is each resistance below 5 Ω?* | Go to Step 6. | "PNK" wire and/or "BLU" wire is open or high resistance. |
| 6 | **Engine start signal check**<br>1) Check starting motor circuit for opening and short referring to Step 2 of "DTC P0616: Starter Relay Circuit Low: " and Step 3 and 4 of "DTC P0617: Starter Relay Circuit High: ".<br>*Is check result satisfactory?* | Go to Step 7. | Repair or replace. |
| 7 | **CKP sensor check**<br>1) Check CKP sensor and sensor plate tooth referring to "Camshaft Position (CMP) Sensor Inspection: in Section 1C".<br>*Is check result satisfactory?* | Substitute a known-good ECM and recheck. | Replace CKP sensor and/or sensor plate. |

www.cargeek.ir

www.CarGeek.ir

## DTC P0335: Crankshaft Position (CKP) Sensor Circuit (For M16 Engine)

S5JB0A1104040

### Wiring Diagram

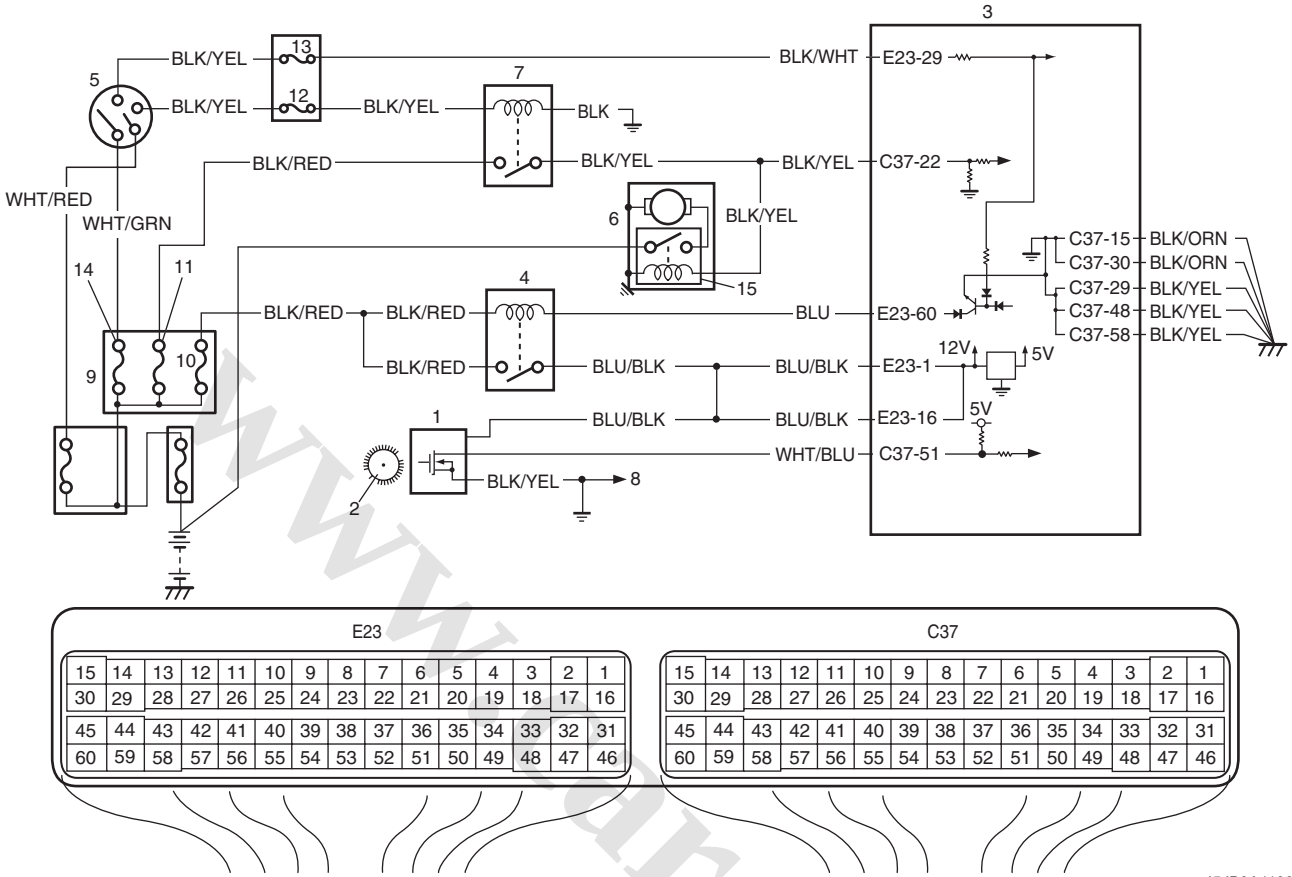


I5JB0A110048-02

| | | |
|---|---|---|
| 1. CKP sensor | 6. Starting motor | 11. “ST” fuse |
| 2. Sensor plate on crankshaft | 7. Starting motor control relay | 12. “ST SIG” fuse |
| 3. ECM | 8. To CMP sensor | 13. “IG COIL” fuse |
| 4. Main relay | 9. Fuse box No.2 | 14. “IGN” fuse |
| 5. Ignition switch | 10. “FI” fuse | 15. Starting motor magnet clutch |

### DTC Detecting Condition and Trouble Area

| DTC detecting condition | Trouble area |
|---|---|
| No CKP sensor signal for 2 sec. even if starting motor signal is inputted at engine cranking.<br>(1 driving cycle detection logic) | • CKP sensor circuit open or short<br>• Sensor plate teeth damaged<br>• CKP sensor malfunction, foreign material being attached or improper installation<br>• ECM<br>• Engine start signal circuit malfunction |

www.cargeek.ir

www.CarGeek.ir


**DTC Confirmation Procedure**

1) With ignition switch turned OFF, connect scan tool.
2) Turn ON ignition switch and clear DTC using scan tool.
3) Crank engine for 3 – 5 sec.
4) Check DTC and pending DTC.

**DTC Troubleshooting**

**NOTE**

**Before this trouble shooting is performed, read the precautions for DTC troubleshooting referring to "Precautions For DTC Troubleshooting: ".**

| Step | Action | Yes | No |
|---|---|---|---|
| 1 | *Was "Engine and Emission Control System Check" performed?* | Go to Step 2. | Go to "Engine and Emission Control System Check: ". |
| 2 | **CKP sensor and connector for proper installation check**<br>*Is CKP sensor installed properly and connector connected securely?* | Go to Step 3. | Correct. |
| 3 | **Wire harness and connection check**<br>1) Disconnect connector from CKP sensor with ignition switch turned OFF.<br>2) Check for proper connection to CKP sensor at "BLU/BLK", "WHT/BLU" and "BLK/YEL" wire terminals.<br>3) If OK, turn ON ignition switch and check voltage at "BLU/BLK", "WHT/BLU" and "BLK/YEL" wire terminals of disconnected CKP sensor connector.<br>**CKP sensor voltage**<br>**Terminal "B+": 10 – 14 V**<br>**Terminal "Vout": 4 – 5 V**<br>**Terminal "GND": 0 V**<br> 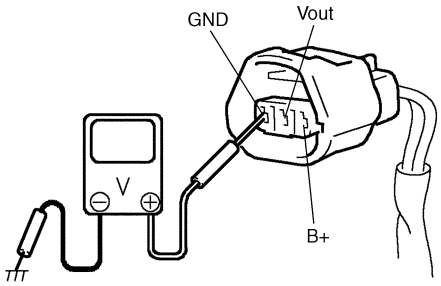 <br><br>I2RH0B110048-01<br>*Is check result satisfactory?* | Go to Step 7. | Go to Step 4. |
| 4 | *Was terminal "Vout" voltage in Step 3 within specification?* | Go to Step 5. | "WHT/BLU" wire is open or shorted to ground / power supply circuit.<br>If wire and connection are OK, substitute a known-good ECM and recheck. |

www.cargeek.ir

www.CarGeek.ir

| Step | Action | Yes | No |
|---|---|---|---|
| 5 | **Ground circuit check**<br>1) Turn ignition switch to OFF position.<br>2) Measure resistance between “BLK/YEL” wire terminal of CKP sensor connector and engine ground.<br>*Is measured resistance value less than 3 Ω?* | Go to Step 6. | “BLK/YEL” wire is open or high resistance. |
| 6 | *Was terminal “B+” voltage in Step 3 within specification?* | Go to Step 7. | “BLU/BLK” wire is open circuit. If wire and connection are OK, substitute a known-good ECM and recheck. |
| 7 | **Engine start signal check**<br>1) Check starting motor circuit for opening and short referring to Step 2 of “DTC P0616: Starter Relay Circuit Low: ” and Step 3 and 4 of “DTC P0617: Starter Relay Circuit High: ”.<br>*Is check result satisfactory?* | Go to Step 8. | Repair or replace. |
| 8 | **CKP sensor check**<br>1) Check CKP sensor and sensor plate tooth referring to “Camshaft Position (CMP) Sensor Inspection: in Section 1C”.<br>*Is check result satisfactory?* | Substitute a known-good ECM and recheck. | Replace CKP sensor and/or sensor plate. |

www.cargeek.ir

www.cargeek.ir

www.CarGeek.ir


## DTC P0340: Camshaft Position (CMP) Sensor Circuit

S5JB0A1104041

### Wiring Diagram

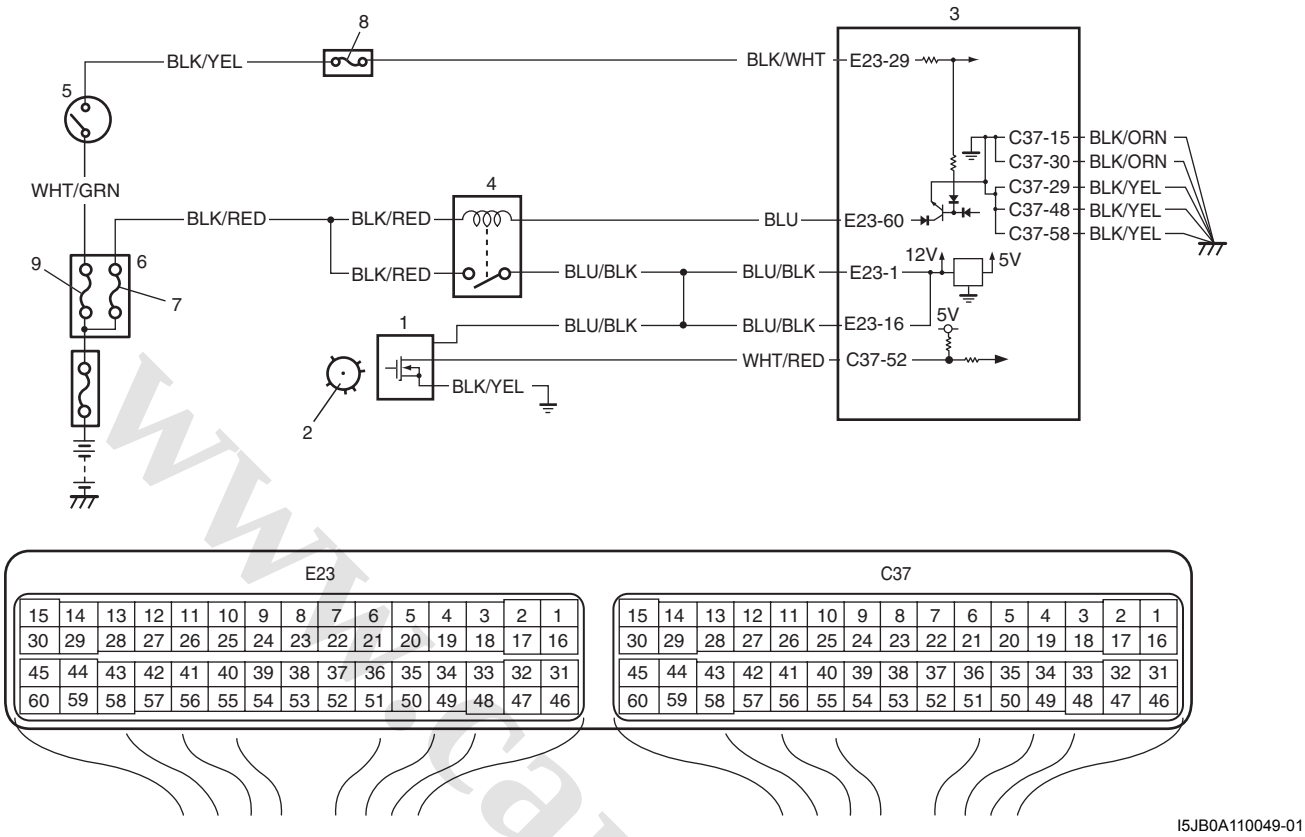


I5JB0A110049-01

| | | | | |
|---|---|---|---|---|
| 1. CMP sensor | 3. ECM | 5. Ignition switch | 7. "FI" fuse | 9. "IGN" fuse |
| 2. Signal rotor | 4. Main relay | 6. Fuse box No.2 | 8. "IG COIL" fuse | |

### System Description

The CMP sensor located on the transmission side of cylinder head (for M16 engine) or cylinder head cover (for J20 engine) consists of the signal generator (magnetic sensor) and signal rotor (intake camshaft portion).
The signal generator generates reference signal through slits in the slit plate which turns together with the camshaft.

### Reference signal

The CMP sensor generates 6 pulses of signals each of which has a different waveform length while the camshaft makes one full rotation. Refer to "Inspection of ECM and Its Circuits: ".
Based on these signals, ECM judges which cylinder piston is in the compression stroke and the engine speed.

### DTC Detecting Condition and Trouble Area

| DTC detecting condition | Trouble area |
|---|---|
| • CMP sensor pulse is less than 20 pulses per crankshaft 8 revolutions<br>• CMP sensor pulse is more than 28 pulses per crankshaft 8 revolutions<br>• CMP sensor pulse is less than 20 pulses between BTDC 155° crank angle (for M16 engine) or BTDC 75° crank angle (for J20 engine) and BTDC 5° crank angle with crankshaft 8 revolutions from engine start.<br>(1 driving cycle detection logic) | • CMP sensor circuit open or short<br>• Signal rotor teeth damaged<br>• CMP sensor malfunction, foreign material being attached or improper installation<br>• ECM |

### DTC Confirmation Procedure

1) With ignition switch turned OFF, connect scan tool.
2) Turn ON ignition switch and clear DTC using scan tool.
3) Crank engine for 5 sec.
4) Check DTC and pending DTC.

www.cargeek.ir

www.CarGeek.ir

## DTC Troubleshooting

**NOTE**

**Before this trouble shooting is performed, read the precautions for DTC troubleshooting referring to "Precautions For DTC Troubleshooting: ".**

| Step | Action | Yes | No |
|---|---|---|---|
| 1 | *Was "Engine and Emission Control System Check" performed?* | Go to Step 2. | Go to "Engine and Emission Control System Check: ". |
| 2 | **CMP sensor and connector for proper installation check**<br><br>*Is CMP sensor installed properly and connector connected securely?* | Go to Step 3. | Correct. |
| 3 | **Wire harness and connection check**<br>1) Disconnect connector from CMP sensor.<br>2) Check for proper connection to CMP sensor at "BLU/BLK", "WHT/RED" and "BLK/YEL" wire terminals.<br>3) If OK, turn ON ignition switch and check voltage at "BLU/BLK", "WHT/RED" and "BLK/YEL" wire terminals of disconnected CMP sensor connector.<br><br>**<u>CMP sensor voltage</u>**<br>**Terminal "B+": 10 – 14 V**<br>**Terminal "Vout": 4 – 5 V**<br>**Terminal "GND": 0 V**<br><br>**For J20 engine**<br> 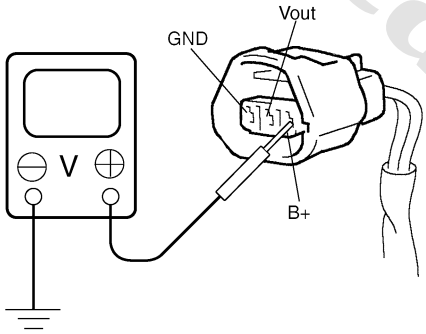 <br><br>I5JB0A110050-01<br><br>**For M16 engine**<br> 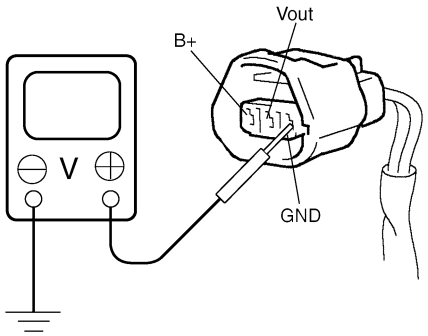 <br><br>I4RS0B110094-01<br><br>*Is check result satisfactory?* | Go to Step 7. | Go to Step 4. |

www.cargeek.ir

www.CarGeek.ir


| Step | Action | Yes | No |
|---|---|---|---|
| 4 | *Was terminal "Vout" voltage in Step 3 within specification?* | Go to Step 5. | "WHT/RED" wire is open or shorted to ground / power supply circuit.<br>If wire and connection are OK, substitute a known-good ECM and recheck. |
| 5 | **Ground circuit check**<br>1) Turn ignition switch to OFF position.<br>2) Measure resistance between "BLK/YEL" wire terminal of CMP sensor connector and engine ground.<br>*Is measured resistance value less than 3 Ω?* | Go to Step 6. | "BLK/YEL" wire is open or high resistance circuit. |
| 6 | *Was terminal "B+" voltage in Step 3 within specification?* | Go to Step 7. | "BLU/BLK" wire is open circuit. If wire and connection are OK, substitute a known-good ECM and recheck. |
| 7 | **CMP sensor check**<br>1) Check CMP sensor and signal rotor tooth referring to "Camshaft Position (CMP) Sensor Inspection: in Section 1C".<br>*Is check result satisfactory?* | Substitute a known-good ECM and recheck. | Replace CMP sensor and/or intake camshaft. |

www.cargeek.ir
www.cargeek.ir

www.CarGeek.ir

## DTC P0401 / P0402: Exhaust Gas Recirculation Flow Insufficient Detected / Excessive Detected

S5JB0A1104042

### System and Wiring Diagram

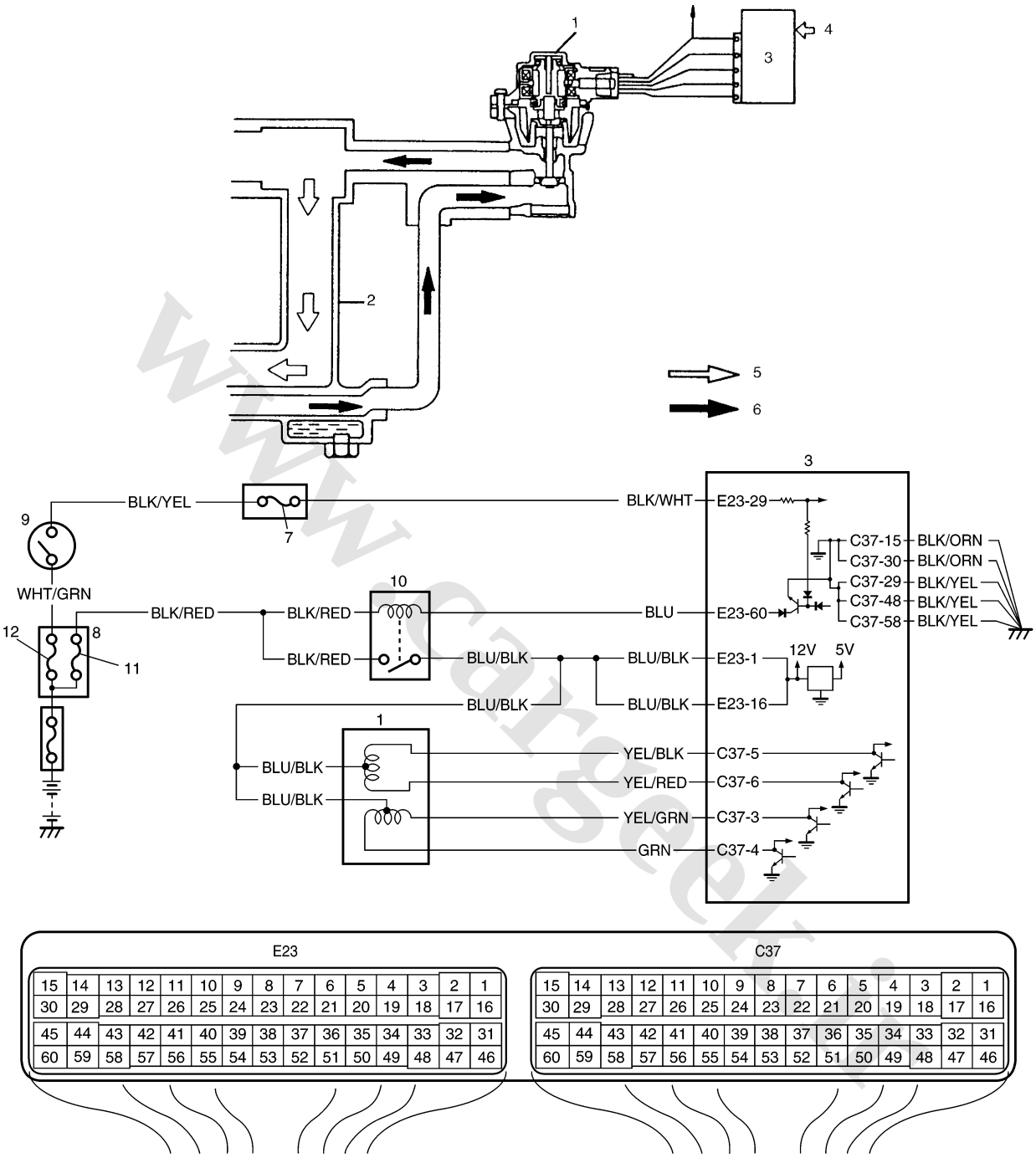


I5JB0A110051-01

| | | | |
|---|---|---|---|
| 1. EGR valve | 4. Sensed information | 7. “IG COIL” fuse | 10. Main relay |
| 2. Intake manifold | 5. Fresh air | 8. Fuse box No.2 | 11. “FI” fuse |
| 3. ECM | 6. Exhaust gas | 9. Ignition switch | 12. “IGN” fuse |

www.cargeek.ir

www.CarGeek.ir


**DTC Detecting Condition and Trouble Area**

| DTC detecting condition | Trouble area |
|---|---|
| **DTC P0401:**<br>Difference in intake manifold absolute pressure between opened EGR valve and closed EGR valve is smaller than specified value.<br>(*2 driving cycle detection logic, monitoring once / 1 driving)<br>**DTC P0402:**<br>Difference in intake manifold absolute pressure between opened EGR valve and closed EGR valve is larger than specified value.<br>(*2 driving cycle detection logic, monitoring once / 1 driving) | • EGR valve<br>• EGR passage<br>• MAP sensor<br>• ECM |

**DTC Confirmation Procedure**

**⚠ WARNING**

- **When performing a road test, select a place where there is no traffic or possibility of a traffic accident and be very careful during testing to avoid occurrence of an accident.**
- **Road test should be carried out by 2 persons, a driver and a tester, on a level road.**

**NOTE**

**Check to make sure that following conditions are satisfied when using this "DTC confirmation procedure".**

- **Intake air temperature at engine start: –10 °C (14 °F) to 80 °C (176 °F)**
- **Intake air temperature: –10 °C (14 °F) to 70 °C (158 °F)**
- **Engine coolant temperature: 70 °C (158 °F) to 150 °C (302 °F)**
- **Altitude (barometric pressure): 2400 m, 8000 ft or less (560 mmHg, 75 kPa or more)**

1) With ignition switch turned OFF, connect scan tool.
2) Turn ON ignition switch and clear DTC using scan tool.
3) Start engine and warm up to normal operating temperature.
4) Run engine at idle for 10 min.
5) Drive vehicle and increase engine speed 3000 rpm in 3rd gear.
6) Release accelerator pedal and with engine brake applied, keep vehicle coasting for 5 sec. or more. (Keep fuel cut condition for 5 sec. or more) If fuel cut condition is not kept for 5 sec. or more, coast down a slope in engine speed 1000 – 3000 rpm for 5 sec. or more.
7) Stop vehicle and run engine at idle.
8) Check DTC and pending DTC by using scan tool.

www.cargeek.ir
www.cargeek.ir

www.CarGeek.ir

## DTC Troubleshooting

**NOTE**

**Before this trouble shooting is performed, read the precautions for DTC troubleshooting referring to "Precautions For DTC Troubleshooting: ".**

| Step | Action | Yes | No |
|---|---|---|---|
| 1 | *Was "Engine and Emission Control System Check" performed?* | Go to Step 2. | Go to "Engine and Emission Control System Check: ". |
| 2 | *Do you have SUZUKI scan tool?* | Go to Step 3. | Go to Step 5. |
| 3 | **EGR valve operation check**<br>1) With ignition switch turned OFF, install SUZUKI scan tool to DTC.<br>2) Check EGR system referring to "EGR System Inspection: in Section 1B".<br>*Is it in good condition?* | Go to Step 4. | Go to Step 5. |
| 4 | **MAP sensor check**<br>1) Check MAP sensor for performance referring to "Manifold Absolute Pressure (MAP) Sensor Inspection: in Section 1C".<br>*Is check result satisfactory?* | Intermittent trouble or faulty ECM.<br>Check for intermittent referring to "Intermittent and Poor Connection Inspection: in Section 00". | Replace MAP sensor. |
| 5 | **EGR valve control circuit check**<br>1) Check that EGR valve control circuits are in good condition referring to Step 2 to 5 of "DTC P0403: Exhaust Gas Recirculation Control Circuit: "<br>*Are circuits in good condition?* | Go to Step 6. | Repair or replace EGR valve control circuit(s). |
| 6 | **EGR valve check**<br>1) Check EGR valve referring to "EGR Valve Inspection: in Section 1B".<br>*Is check result satisfactory?* | Go to Step 7. | Faulty EGR valve. |
| 7 | **MAP sensor check**<br>1) Check MAP sensor for performance referring to "Manifold Absolute Pressure (MAP) Sensor Inspection: in Section 1C".<br>*Is check result satisfactory?* | EGR passage clogged. If OK, substitute a known-good ECM and recheck. | Replace MAP sensor. |

www.cargeek.ir

www.CarGeek.ir


## DTC P0403: Exhaust Gas Recirculation Control Circuit

S5JB0A1104043

### Wiring Diagram

Refer to “DTC P0401 / P0402: Exhaust Gas Recirculation Flow Insufficient Detected / Excessive Detected: ”.

### DTC Detecting Condition and Trouble Area

| DTC detecting condition | Trouble area |
|---|---|
| EGR valve output voltage is different from output command with more than one pole out of 4 poles.<br>(1 driving cycle detection logic) | • EGR valve circuit open<br>• EGR valve<br>• ECM |

### DTC Confirmation Procedure

**⚠ WARNING**

- **When performing a road test, select a place where there is no traffic or possibility of a traffic accident and be very careful during testing to avoid occurrence of an accident.**
- **Road test should be carried out by 2 persons, a driver and a tester, on a level road.**

1) With ignition switch turned OFF, connect scan tool to DLC.
2) Turn ON ignition switch and clear DTC using scan tool.
3) Start engine and warm it up to normal operating temperature.
4) Drive vehicle in 2000 – 3500 rpm of engine speed.
5) Keep above vehicle speed for 1 min. (Throttle valve opening is kept constant in this step.)
6) Stop vehicle and check DTC and pending DTC.

### DTC Troubleshooting

**NOTE**

**Before this trouble shooting is performed, read the precautions for DTC troubleshooting referring to “Precautions For DTC Troubleshooting: ”.**

| Step | Action | Yes | No |
|---|---|---|---|
| 1 | *Was “Engine and Emission Control System Check” performed?* | Go to Step 2. | Go to “Engine and Emission Control System Check: ”. |
| 2 | **EGR valve power supply circuit check**<br>1) With ignition switch turned OFF, disconnect EGR valve connector.<br>2) With ignition switch turned ON, measure voltage between “BLU/BLK” wire terminal of EGR valve connector and vehicle body ground.<br>*Is check voltage 10 – 14 V?* | Go to Step 3. | “BLU/BLK” wire is open circuit. |
| 3 | **Wire circuit check**<br>1) Disconnect connectors from ECM with ignition switch turned OFF.<br>2) Turn ON ignition switch.<br>3) Measure voltage between engine ground and each “YEL/BLK”, “YEL/RED”, “YEL/GRN”, “YEL” wire terminals of EGR valve connector.<br>*Is each voltage 0 V?* | Go to Step 4. | Faulty wire(s) are shorted to other circuit.<br>If wires are OK, substitute a known-good ECM and recheck. |

www.cargeek.ir

www.CarGeek.ir

| Step | Action | Yes | No |
|---|---|---|---|
| 4 | **Wire circuit check**<br>1) With ignition switch turned OFF, measure resistance between engine ground and each “YEL/BLK”, “YEL/RED”, “YEL/GRN”, “YEL” wire terminals of EGR valve connector.<br>*Is resistance infinity?* | Go to Step 5. | Faulty wire(s) are shorted to ground circuit.<br>If wires are OK, substitute a known-good ECM and recheck. |
| 5 | **Short circuit check for EGR valve control circuit**<br>1) With ignition turned OFF, measure resistance between each EGR valve control circuit wire (“YEL/BLK”, “YEL/RED”, “YEL/GRN” and “YEL” wire) and each EGR valve control circuit wire.<br>*Is each resistance infinity?* | Go to Step 6. | Faulty wire(s) are short circuit. |
| 6 | **EGR valve stepper motor coil circuit check**<br>1) With ignition switch turned OFF, connect EGR valve connector.<br>2) Measure resistance between “E23-1/16” and each “C37-3”, “C37-4”, “C37-5”, “C37-6” terminals of ECM connector.<br>*Is each resistance 20 – 31 Ω at 20 ℃, 68 ℉?* | Faulty ECM. Substitute a known-good ECM and recheck. | Go to Step 7. |
| 7 | **EGR valve check**<br>1) Check EGR valve resistance referring to “EGR Valve Inspection: in Section 1B”.<br>*Is resistance within specified value?* | Faulty wire(s) are open or high resistance circuit. If wires are OK, substitute a known-good ECM and recheck. | Faulty EGR valve. |

www.cargeek.ir

www.CarGeek.ir


## DTC P0420: Catalyst System Efficiency below Threshold

S5JB0A1104044

### System and Wiring Diagram

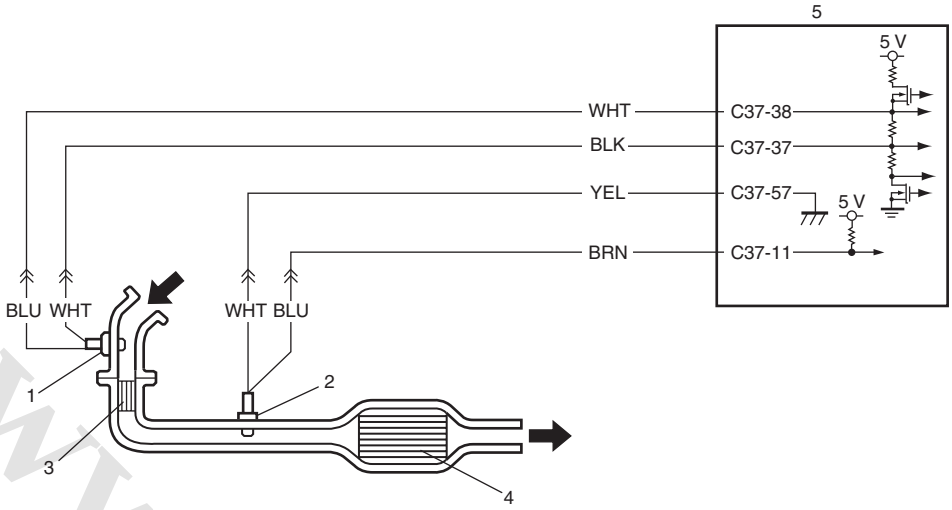


I5JB0A110053-02

| | | |
|---|---|---|
| 1. A/F sensor | 3. Warm up three way catalytic converter | 5. ECM |
| 2. HO2S-2 | 4. Three way catalytic converter | |

### Circuit Description

ECM monitors oxygen concentration in the exhaust gas which has passed the warm up three way catalytic converter by HO2S-2. When the catalyst is functioning properly, the variation cycle of HO2S-2 output voltage (oxygen concentration) is slower than that of A/F sensor output signal because of the amount of oxygen in the exhaust gas which has been stored in warm up three way catalytic converter.

### A/F Sensor Description

Refer to “A/F Sensor Description: ”.

### DTC Detecting Condition and Trouble Area

| DTC detecting condition | Trouble area |
|---|---|
| Ratio of integrated value of HO2S-2 output variation per integrated value of A/F sensor output variation is more than specification while vehicle is running constant speed and low engine load after warmed up.<br>(*2 driving cycle detection logic, monitoring once / 1 driving) | • Exhaust gas leak<br>• Warm up three way catalytic converter malfunction<br>• HO2S-2 malfunction<br>• A/F sensor malfunction |

www.cargeek.ir

www.CarGeek.ir

### DTC Confirmation Procedure

**⚠ WARNING**

- **When performing a road test, select a place where there is no traffic or possibility of a traffic accident and be very careful during testing to avoid occurrence of an accident.**
- **Road test should be carried out by 2 persons, a driver and a tester, on a level road.**

**NOTE**

**Check to make sure that following conditions are satisfied when using this "DTC Confirmation Procedure".**

- **Intake air temperature at engine start: –10 °C (14 °F) to 80 °C (176 °F)**
- **Intake air temperature: –10 °C (14 °F) to 70 °C (158 °F)**
- **Engine coolant temperature: 70 °C (158 °F) to 150 °C (302 °F)**
- **Altitude (barometric pressure): 2400 m, 8000 ft or less (560 mmHg, 75 kPa or more)**

1) Connect scan tool to DLC with ignition switch turned OFF.
2) Turn ON ignition switch and clear DTC using scan tool.
3) Increase vehicle speed to 50 – 60 mph, 80 – 100 km/h. (engine speed: 2500 – 3000 r/min.)
4) Keep above vehicle speed for 10 min. or more (Throttle valve opening is kept constant in this step).
5) Stop vehicle and check if DTC / pending DTC exists using scan tool. If not, check if catalyst monitoring test has been completed using scan tool. If not in both of above checks (i.e., no DTC / pending DTC and catalyst monitoring test not completed), check vehicle condition (environmental) and repeat Step 3) through 5).

### DTC Troubleshooting

**NOTE**

**Before this trouble shooting is performed, read the precautions for DTC troubleshooting referring to "Precautions For DTC Troubleshooting: ".**

| Step | Action | Yes | No |
|---|---|---|---|
| 1 | *Was "Engine and Emission Control System Check" performed?* | Go to Step 2. | Go to "Engine and Emission Control System Check: ". |
| 2 | **Exhaust system visual check**<br>1) Check exhaust system for leaks, damage and loose connection.<br>*Is it in good condition?* | Go to Step 3. | Repair or replace defective part. |
| 3 | **HO2S-2 output voltage check**<br>1) Check output voltage of HO2S-2 referring to "DTC P0137 / P0138: O2 Sensor (HO2S) Circuit Low Voltage / High Voltage (Sensor-2): ".<br>*Is check result satisfactory?* | Replace exhaust manifold (built in warm up three way catalytic converter) and exhaust center pipe (built in three way catalytic converter). | Check "BRN" and/or "YEL" wires for open and short, and connections for poor connection.<br>If wires and connections are OK, replace HO2S-2. |

www.cargeek.ir

www.CarGeek.ir


## DTC P0443: Evaporative Emission System Purge Control Valve Circuit

S5JB0A1104045

### Wiring Diagram

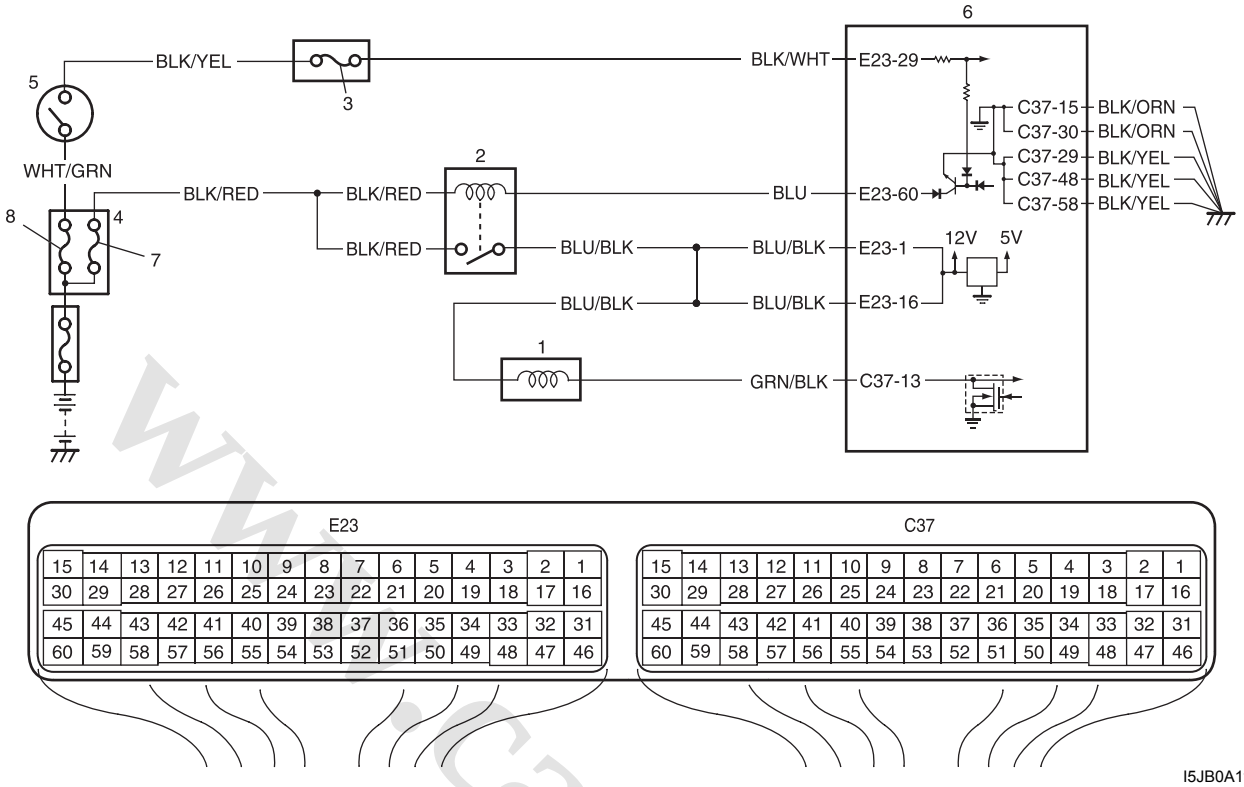


I5JB0A110054-02

| | | |
|---|---|---|
| 1. EVAP canister purge valve | 4. Fuse box No.2 | 7. "FI" fuse |
| 2. Main relay | 5. Ignition switch | 8. "IGN" fuse |
| 3. "IG COIL" fuse | 6. ECM | |

### DTC Detecting Condition and Trouble Area

| DTC detecting condition | Trouble area |
|---|---|
| Monitor signal of EVAP canister purge valve is different from command signal. (Circuit open or short)<br>(2 driving cycle detection logic) | • EVAP canister purge valve<br>• EVAP canister purge valve circuit<br>• ECM |

### DTC Confirmation Procedure

**⚠ WARNING**

- **When performing a road test, select a place where there is no traffic or possibility of a traffic accident and be very careful during testing to avoid occurrence of an accident.**
- **Road test should be carried out by 2 persons, a driver and a tester, on a level road.**

1) With ignition switch OFF, connect scan tool to DLC.
2) Turn ON ignition switch and clear DTC using scan tool.
3) Start engine and warm up normal operating temperature.
4) Drive vehicle at more than 40 km/h, 25 mph for 5 min. or more.
5) Check DTC and pending DTC.

www.cargeek.ir

www.CarGeek.ir

## DTC Troubleshooting

**⚠ WARNING**

**In order to reduce risk of fire and personal injury, this work must be performed in a well ventilated area and away from any open flames such as gas water heater.**

**NOTE**

**Before this trouble shooting is performed, read the precautions for DTC troubleshooting referring to "Precautions For DTC Troubleshooting: ".**

| Step | Action | Yes | No |
|---|---|---|---|
| 1 | *Was "Engine and Emission Control System Check" performed?* | Go to Step 2. | Go to "Engine and Emission Control System Check: ". |
| 2 | **EVAP canister purge power supply circuit check**<br>1) Turn OFF ignition switch and disconnect connector from EVAP canister purge valve.<br>2) Measure voltage between engine ground and "BLU/BLK" wire terminal of EVAP canister purge valve connector with ignition switch turned ON.<br>*Is it voltage 10 – 14 V?* | Go to Step 3. | "BLU/BLK" wire is open circuit. |
| 3 | **Wire circuit check**<br>1) Disconnect connectors from ECM with ignition switch turned OFF.<br>2) Measure resistance between "C37-13" terminal of ECM connector and vehicle body ground.<br>*Is resistance infinity?* | Go to Step 4. | "GRN/BLK" wire is shorted to ground circuit. |
| 4 | **Wire circuit check**<br>1) Measure voltage between "C37-13" terminal of ECM connector and vehicle body ground with ignition switch turned ON.<br>*Is voltage 0 V?* | Go to Step 5. | "GRN/BLK" wire is shorted to other circuit. |
| 5 | **Wire circuit check**<br>1) Connect connector to purge control valve with ignition switch turned OFF.<br>2) Turn ON ignition switch and measure voltage between "C37-13" terminal of ECM connector and vehicle body ground.<br>*Is it voltage 10 – 14 V?* | Go to Step 6. | "GRN/BLK" wire is open circuit. |
| 6 | **EVAP canister purge control valve check**<br>1) Check EVAP canister purge control valve referring to "EVAP Canister Purge Valve Inspection:  in Section 1B".<br>*Is it in good condition?* | Go to Step 7. | Faulty EVAP canister purge control valve. |
| 7 | **EVAP canister purge control circuit check**<br>1) With ignition switch turn OFF, measure resistance between "E23-1/16" terminal and "C37-13" terminal of ECM connector.<br>*Is resistance below 40 Ω at 20 ℃, 68 ℉?* | Faulty ECM. Substitute a known-good ECM and recheck. | "GRN/BLK" and/or "BLU/BLK" wire are high resistance circuit. |

www.cargeek.ir

www.CarGeek.ir


## DTC P0462: Fuel Level Sensor Circuit Low

S5JB0A1104047

### Wiring Diagram

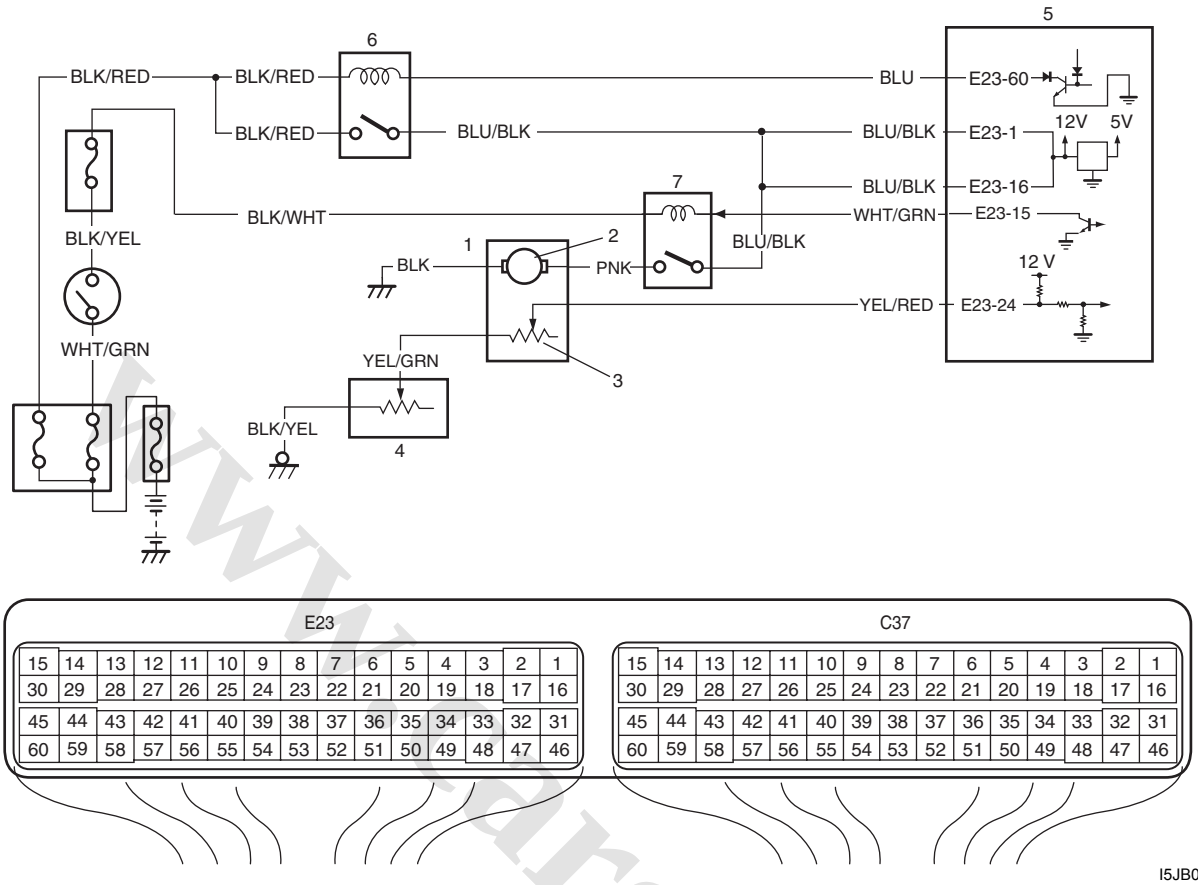


I5JB0A110055-02

| | | |
|---|---|---|
| 1. Fuel pump assembly | 4. Sub fuel level sensor | 7. Fuel pump relay |
| 2. Fuel pump | 5. ECM | |
| 3. Main fuel level sensor | 6. Main relay | |

### DTC Detecting Condition and Trouble Area

| DTC detecting condition | Trouble area |
|---|---|
| Fuel level sensor voltage is lower than specified value for 3 seconds continuously.<br>(1 driving cycle detection logic but MIL does not light up) | • ECM power and/or ground circuit malfunction<br>• ECM malfunction<br>• Fuel level sensor and/or its circuit malfunction |

### DTC Confirmation Procedure

1) With ignition switch turned OFF, connect scan tool.
2) Turn ON ignition switch and clear DTC using scan tool.
3) Start engine and run it for 30 sec. or more.
4) Check DTC and pending DTC.

www.cargeek.ir

www.CarGeek.ir

## DTC Troubleshooting

**NOTE**

**Before this trouble shooting is performed, read the precautions for DTC troubleshooting referring to "Precautions For DTC Troubleshooting: ".**

| Step | Action | Yes | No |
|---|---|---|---|
| 1 | *Was "Engine and Emission Control System Check" performed?* | Go to Step 2. | Go to "Engine and Emission Control System Check: ". |
| 2 | *Do you have SUZUKI scan tool?* | Go to Step 3. | Go to Step 4. |
| 3 | **Fuel level sensor output signal check with SUZUKI scan tool**<br>1) Connect SUZUKI scan tool to DLC with ignition switch turned OFF.<br>2) Turn ON ignition switch and check fuel level displayed on SUZUKI scan tool.<br>*Is 100% displayed?* | Go to Step 5. | Intermittent trouble. Check for intermittent referring to "Intermittent and Poor Connection Inspection: in Section 00". |
| 4 | **Fuel level sensor output signal check**<br>1) Turn OFF ignition switch.<br>2) Remove ECM from its bracket with ECM connector connected.<br>3) Turn ON ignition switch and measure voltage between "E23-24" terminal of ECM connector and vehicle body ground.<br>*Is voltage about 3.5 V or less?* | Go to Step 5. | Intermittent trouble. Check for intermittent referring to "Intermittent and Poor Connection Inspection: in Section 00". |
| 5 | **Fuel level sensor output signal circuit check**<br>1) Disconnect fuel pump connector referring to "Fuel Tank Removal and Installation: in Section 1G".<br>2) Disconnect connectors from ECM with ignition switch turned OFF.<br>3) Measure resistance between "E23-24" terminal of ECM connector and vehicle body ground.<br>*Is resistance infinity?* | Go to Step 6. | "YEL/RED" wire is shorted to ground circuit. |
| 6 | **Fuel level sensor output signal circuit check**<br>1) Connect connectors to ECM.<br>2) Measure voltage between "E23-24" terminal of ECM connector and engine ground with ignition switch turned ON.<br>*Is voltage 10 – 14 V?* | Go to Step 7. | Substitute a known-good ECM and recheck. |
| 7 | **Fuel level sensor check**<br>1) Check fuel level sensor (main and sub) referring to "Fuel Level Sensor Inspection: in Section 9C"<br>*Is it in good condition?* | "YEL/GRN" wire between main fuel lever sensor and sub fuel level sensor is shorted to ground circuit. If wire is OK, substitute a known-good ECM and recheck. | Faulty fuel level sensor. |

www.cargeek.ir

www.CarGeek.ir


## DTC P0463: Fuel Level Sensor Circuit High

S5JB0A1104095

### Wiring Diagram

Refer to “DTC P0462: Fuel Level Sensor Circuit Low: ”.

### DTC Detecting Condition and Trouble Area

| DTC detecting condition | Trouble area |
|---|---|
| Fuel level sensor voltage is higher than specified value for 3 seconds continuously.<br>(1 driving cycle detection logic but MIL does not light up) | • ECM power and/or ground circuit malfunction<br>• ECM malfunction<br>• Fuel level sensor and/or its circuit malfunction |

### DTC Confirmation Procedure

1) With ignition switch turned OFF, connect scan tool.
2) Turn ON ignition switch and clear DTC using scan tool.
3) Start engine and run it for 30 sec. or more.
4) Check DTC and pending DTC.

### DTC Troubleshooting

**NOTE**

**Before this trouble shooting is performed, read the precautions for DTC troubleshooting referring to “Precautions For DTC Troubleshooting: ”.**

| Step | Action | Yes | No |
|---|---|---|---|
| 1 | *Was “Engine and Emission Control System Check” performed?* | Go to Step 2. | Go to “Engine and Emission Control System Check: ”. |
| 2 | *Does fuel level meter in combination meter indicate “E” (empty)?* | Replenish fuel tank with fuel and go to Step 3. | Go to Step 3. |
| 3 | *Do you have SUZUKI scan tool?* | Go to Step 4. | Go to Step 5. |
| 4 | **Fuel level sensor output signal check with SUZUKI scan tool**<br>1) Connect SUZUKI scan tool to DLC with ignition switch turned OFF.<br>2) Turn ON ignition switch and check fuel level displayed on SUZUKI scan tool.<br>*Is it 3% or less?* | Go to Step 6. | Intermittent trouble. Check for intermittent referring to “Intermittent and Poor Connection Inspection: in Section 00”. |
| 5 | **Fuel level sensor output signal check**<br>1) Turn OFF ignition switch.<br>2) Remove ECM from its bracket with ECM connectors connected.<br>3) Turn ON ignition switch and measure voltage between “E23-24” terminal of ECM connector and vehicle body ground.<br>*Is voltage about 3.5 V or more?* | Go to Step 6. | Intermittent trouble. Check for intermittent referring to “Intermittent and Poor Connection Inspection: in Section 00”. |
| 6 | **Fuel level sensor circuit resistance check**<br>1) Disconnect connectors from ECM with ignition switch turned OFF.<br>2) Check for proper connection to “E23-24” terminal of ECM connector.<br>3) If OK, measure resistance between “E23-24” terminal of ECM connector and vehicle body ground.<br>*Is resistance below 280 Ω?* | Go to Step 7. | Go to Step 8. |

www.cargeek.ir

www.CarGeek.ir

| Step | Action | Yes | No |
|---|---|---|---|
| 7 | **Short circuit check for fuel level sensor output signal circuit**<br>1) Turn ON ignition switch and measure voltage between “E23-24” terminal of ECM connector and vehicle body ground.<br>*Is voltage 0 V?* | Go to Step 8. | “YEL/RED” wire shorted to other circuit. |
| 8 | **Open circuit check for fuel level sensor output signal circuit**<br>1) Disconnect fuel pump connector referring to “Fuel Tank Removal and Installation: in Section 1G”.<br>2) Check for proper connection to “YEL/RED” and “YEL/GRN” wire terminals of fuel pump connector.<br>3) Connect connectors to ECM.<br>4) Turn ON ignition switch, measure voltage between “YEL/RED” wire terminal of disconnected fuel pump connector and vehicle body ground.<br>*Is voltage 10 – 14 V?* | Go to Step 10. | Go to Step 9. |
| 9 | **Open circuit check for fuel level sensor output signal circuit**<br>1) Measure voltage between “E23-24” terminal of ECM connector and engine ground.<br>*Is voltage 10 – 14 V?* | “YEL/RED” wire is open circuit. | Substitute a known-good ECM and recheck. |
| 10 | **Fuel level sensor ground circuit check**<br>1) Disconnect connector from sub fuel lever sensor with ignition switch turned OFF.<br>2) Measure resistance between “BLK/YEL” wire terminal of fuel pump connector and vehicle body ground.<br>*Is resistance below 5 Ω?* | Go to Step 11. | “BLK/YEL” wire in open or high resistance circuit. |
| 11 | **High resistance circuit check for fuel level sensor circuit**<br>1) Disconnect connectors from ECM.<br>2) Measure resistance between “YEL/RED” wire terminal of fuel pump connector and “E23-24” wire terminal of ECM connector.<br>*Is resistance below 5 Ω?* | Go to Step 12. | “YEL/RED” wire is high resistance circuit. |
| 12 | **Fuel level sensor check**<br>1) Check fuel level sensor (main and sub) referring to “Fuel Level Sensor Inspection: in Section 9C”.<br>*Is it in good condition?* | “YEL/GRN” wire between main fuel lever sensor and sub fuel lever sensor is open or high resistance. If wire is OK, substitute a known-good ECM and recheck. | Faulty fuel level sensor. |

www.cargeek.ir

www.CarGeek.ir


## DTC P0480: Fan 1 (Radiator Cooling Fan) Control Circuit

S5JB0A1104048

### Wiring Diagram

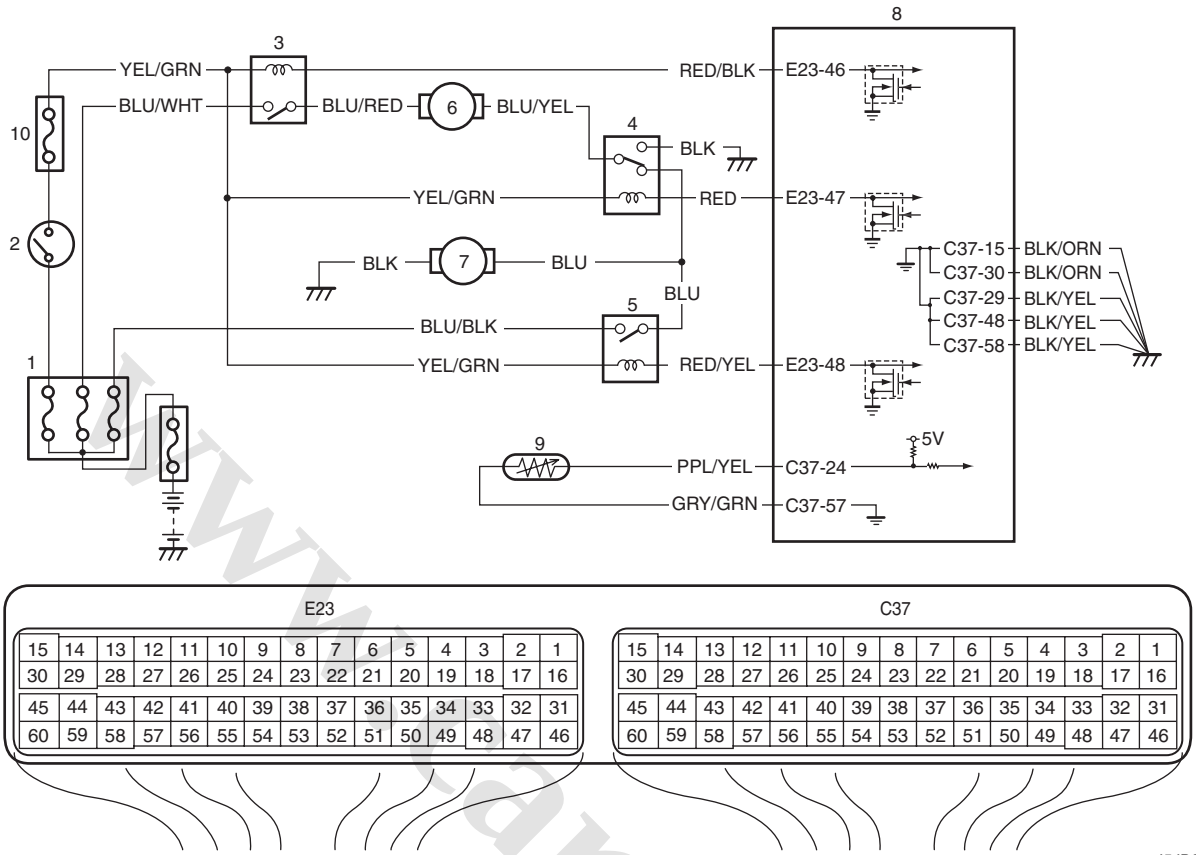


I5JB0A110056-01

| | | |
|---|---|---|
| 1. Fuse box No.2 | 5. Radiator cooling fan relay No. 3 | 9. ECT sensor |
| 2. Ignition switch | 6. Radiator cooling fan motor No.1 | 10 “IG2 SIG” fuse<br>. |
| 3. Radiator cooling fan relay No. 1 | 7. Radiator cooling fan motor No.2 | |
| 4. Radiator cooling fan relay No. 2 | 8. ECM | |

### DTC Detecting Condition and Trouble Area

| DTC detecting condition | Trouble area |
|---|---|
| Monitor signal of radiator cooling fan relay is different from command signal.<br>(1 driving cycle detection logic) | • Radiator cooling fan relay circuit malfunction<br>• Radiator cooling fan relay malfunction<br>• ECM malfunction |

### DTC Confirmation Procedure

1) Turn OFF ignition switch.
2) Clear DTC with ignition switch turned ON.
3) Run engine at idle speed.
4) Check DTC.

www.cargeek.ir

www.CarGeek.ir

## DTC Troubleshooting

**NOTE**

**Before this trouble shooting is performed, read the precautions for DTC troubleshooting referring to "Precautions For DTC Troubleshooting: ".**

| Step | Action | Yes | No |
|---|---|---|---|
| 1 | *Was "Engine and Emission Control System Check" performed?* | Go to Step 2. | Go to "Engine and Emission Control System Check: ". |
| 2 | **Wire circuit check**<br>1) Disconnect connectors from ECM with ignition switch turned OFF.<br>2) Check for proper connection to ECM at "E23-46", "E23-47" and "E23-48" terminals.<br>3) If OK, turn ON ignition switch.<br>4) Measure voltage between "E23-46" terminal of ECM connector and vehicle body ground.<br>*Is voltage 10 – 14 V?* | Go to Step 3. | Go to Step 4. |
| 3 | **Radiator cooling fan control No.1 check**<br>1) Connect connectors to ECM with ignition switch turned OFF.<br>2) Run engine until ECT is over 97.5 °C 207.5 °F.<br>3) Measure voltage between "E23-46" terminal of ECM connector and vehicle body ground.<br>*Is voltage below 1.5 V?* | Go to Step 8. | Substitute a known-good ECM and recheck. |
| 4 | **Wire circuit check**<br>1) Disconnect radiator cooling fan relay No.1 (1) from relay box (2) with ignition switch turned OFF.<br>2) Turn ON ignition switch.<br>3) Measure voltage between "YEL/GRN" wire terminal of radiator cooling fan relay No.1 connector and vehicle body ground.<br> 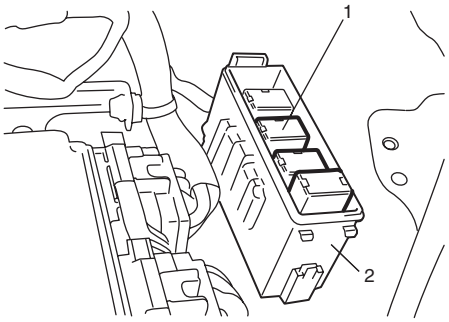 <br>I5JB0A110057-02<br>*Is voltage 10 – 14 V?* | Go to Step 5. | "YEL/GRN" wire is open circuit. |
| 5 | **Wire circuit check**<br>1) Measure resistance between "RED/BLK" wire terminal of radiator cooling fan relay No.1 connector and vehicle body ground with ignition switch turned OFF.<br>*Is resistance infinity?* | Go to Step 6. | "RED/BLK" wire is shorted to ground circuit. |

www.cargeek.ir

www.CarGeek.ir


| Step | Action | Yes | No |
|---|---|---|---|
| 6 | **Wire circuit check**<br>1) Measure voltage between “RED/BLK” wire terminal of radiator cooling fan relay No.1 connector and vehicle body ground with ignition switch turned ON.<br>*Is voltage 0 V?* | Go to Step 7. | “RED/BLK” wire is shorted to other circuit. |
| 7 | **Wire circuit check**<br>1) Measure resistance between “RED/BLK” wire terminal of radiator cooling fan relay No.1 connector and “E23-46” terminal of ECM connector with ignition switch turned OFF.<br>*Is resistance below 2 Ω?* | Go to Step 20. | “RED/BLK” wire is open circuit. |
| 8 | **Wire circuit check**<br>1) Disconnect connectors from ECM with ignition switch turned OFF.<br>2) Measure voltage between “E23-47” terminal of ECM connector and vehicle body ground with ignition switch turned ON.<br>*Is voltage 10 – 14 V?* | Go to Step 9. | Go to Step 10. |
| 9 | **Radiator cooling fan control No.2 check**<br>1) Connect connectors to ECM with ignition switch turned OFF.<br>2) Run engine until ECT is over 102.5 °C, 216.5 °F.<br>3) Measure voltage between “E23-47” terminal of ECM connector and vehicle body ground.<br>*Is voltage below 1.5 V?* | Go to Step 14. | Substitute a known-good ECM and recheck. |
| 10 | **Wire circuit check**<br>1) Disconnect radiator cooling fan relay No.2 (1) from relay box (2) with ignition switch turned OFF.<br>2) Turn ON ignition switch.<br>3) Measure voltage between “YEL/GRN” wire terminal of radiator cooling fan relay No.2 connector and vehicle body ground.<br> 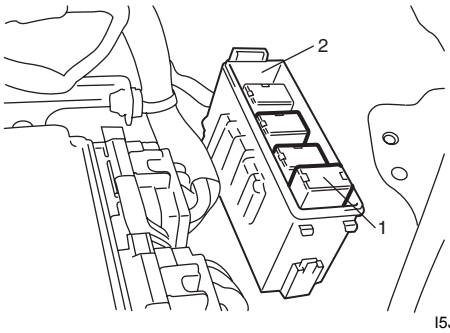 <br><br>I5JB0A110058-02<br>*Is voltage 10 – 14 V?* | Go to Step 11. | “YEL/GRN” wire is open circuit. |
| 11 | **Wire circuit check**<br>1) Measure resistance between “RED” wire terminal of radiator cooling fan relay No.2 connector and vehicle body ground with ignition switch turned OFF.<br>*Is resistance infinity?* | Go to Step 12. | “RED” wire is shorted to ground circuit. |

www.cargeek.ir

www.CarGeek.ir

| Step | Action | Yes | No |
|---|---|---|---|
| 12 | **Wire circuit check**<br>1) Measure voltage between “RED” wire terminal of radiator cooling fan relay No.2 connector and vehicle body ground with ignition switch turned ON.<br>*Is voltage 0 V?* | Go to Step 13. | “RED” wire is shorted to other circuit. |
| 13 | **Wire circuit check**<br>1) Measure resistance between “RED” wire terminal of radiator cooling fan relay No.2 connector and “E23-47” terminal of ECM connector with ignition switch turned OFF.<br>*Is resistance below 2 Ω?* | Go to Step 20. | “RED” wire is open circuit. |
| 14 | **Wire circuit check**<br>1) Disconnect connectors from ECM with ignition switch turned OFF.<br>2) Measure voltage between “E23-48” terminal of ECM connector and vehicle body ground with ignition switch turned ON.<br>*Is voltage 10 – 14 V?* | Go to Step 15. | Go to Step 16. |
| 15 | **Radiator cooling fan control No.3 check**<br>1) Connect connectors to ECM with ignition switch turned OFF.<br>2) Run engine until ECT is over 102.5 °C, 216.5 °F.<br>3) Measure voltage between “E23-48” terminal of ECM connector and vehicle body ground.<br>*Is voltage below 1.5 V?* | Intermittent trouble.<br>Check for intermittent referring to “Intermittent and Poor Connection Inspection: in Section 00”. | Substitute a known-good ECM and recheck. |
| 16 | **Wire circuit check**<br>1) Disconnect radiator cooling fan relay No.3 (1) from relay box (2) with ignition switch turned OFF.<br>2) Turn ON ignition switch.<br>3) Measure voltage between “YEL/GRN” wire terminal of radiator cooling fan relay No.3 connector and vehicle body ground.<br> 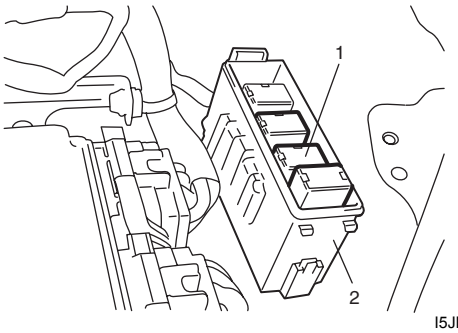 <br><br>I5JB0A110059-02<br>*Is voltage 10 – 14 V?* | Go to Step 17. | “YEL/GRN” wire is open circuit. |
| 17 | **Wire circuit check**<br>1) Measure resistance between “RED/YEL” wire terminal of radiator cooling fan relay No.3 connector and vehicle body ground with ignition switch turned OFF.<br>*Is resistance infinity?* | Go to Step 18. | “RED/YEL” wire is shorted to ground circuit. |

www.cargeek.ir

www.CarGeek.ir


| Step | Action | Yes | No |
|---|---|---|---|
| 18 | **Wire circuit check**<br>1) Measure voltage between “RED/YEL” wire terminal of radiator cooling fan relay No.3 connector and vehicle body ground with ignition switch turned ON.<br>*Is voltage 0 V?* | Go to Step 19. | “RED/YEL” wire is shorted to other circuit. |
| 19 | **Wire circuit check**<br>1) Measure resistance between “RED/YEL” wire terminal of radiator cooling fan relay No.3 connector and “E23-48” terminal of ECM connector with ignition switch turned OFF.<br>*Is resistance below 5 Ω?* | Go to Step 20. | “RED/YEL” wire is open circuit |
| 20 | **Radiator cooling fan relay check**<br>1) Check radiator cooling fan relay referring to “Radiator Cooling Fan Relay Inspection: in Section 1F”.<br>*Is it in good condition?* | Substitute a known-good ECM and recheck. | Replace relay. |

## DTC P0500: Vehicle Speed Sensor (VSS) Malfunction

S5JB0A1104049

### Wiring Diagram

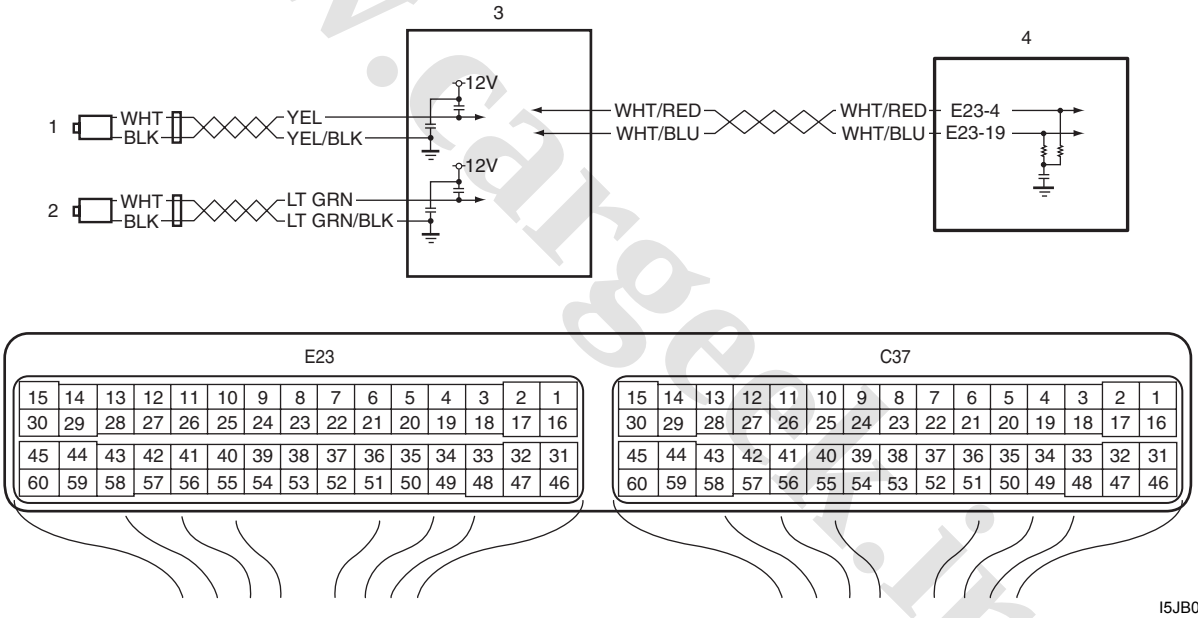


I5JB0A110060-03

| | |
|---|---|
| 1. Rear left side wheel speed sensor (VSS 1) | 3. ABS hydraulic unit / control module Assembly |
| 2. Rear right side wheel speed sensor (VSS 2) | 4. ECM |

### DTC Detecting Condition and Trouble Area

| DTC detecting condition | Trouble area |
|---|---|
| • Vehicle speed signal is not input while fuel is cut at deceleration for 4 seconds continuously at 3600 rpm or less.<br>• Vehicle speed signal is not input even if engine is running with more than 3700 rpm at D-Range for 4 sec. (for A/T model).<br>(2 driving cycle detection logic) | • Wheel speed sensor (VSS)<br>• Wheel speed sensor circuit<br>• ABS hydraulic unit / control module assembly<br>• ECM |

www.cargeek.ir

www.CarGeek.ir

### DTC Confirmation Procedure

**⚠ WARNING**

- **When performing a road test, select a place where there is no traffic or possibility of a traffic accident and be very careful during testing to avoid occurrence of an accident.**
- **Road test should be carried out by 2 persons, a driver and a tester.**

1) With ignition switch turned OFF, connect scan tool.
2) Turn ON ignition switch and clear DTC using scan tool.
3) Warm up engine to normal operating temperature.
4) Drive vehicle at 4000 rpm (engine speed) with 3rd gear (for M/T vehicle) or “3” range (for A/T vehicle).
5) Release accelerator pedal and with engine brake applied, keep vehicle coasting for 6 sec. or more (fuel cut condition for 5 sec. or more) and stop vehicle.
6) For A/T model, drive vehicle at more than 3700 rpm for 10 sec.
7) Check pending DTC and DTC.

### DTC Troubleshooting

**NOTE**

**Before this trouble shooting is performed, read the precautions for DTC troubleshooting referring to “Precautions For DTC Troubleshooting: ”.**

| Step | Action | Yes | No |
|---|---|---|---|
| 1 | *Was “Engine and Emission Control System Check” performed?* | Go to Step 2. | Go to “Engine and Emission Control System Check: ”. |
| 2 | **Vehicle speed signal check**<br>*Is vehicle speed displayed on scan tool in Step 4) and 5) of “DTC Confirmation Procedure”?* | Intermittent trouble.<br>Check for intermittent referring to “Intermittent and Poor Connection Inspection: in Section 00”. | Go to Step 3. |
| 3 | **DTC check in ABS hydraulic unit / control module assembly**<br>1) Connect scan tool to DLC with ignition switch turned OFF.<br>2) Check ABS hydraulic unit / control module assembly for DTC.<br>*Is there any DTDC(s) in ABS hydraulic unit / control module assembly?* | Go to applicable DTC diag. flow. | Substitute a known-good ECM and recheck. |

www.cargeek.ir

www.CarGeek.ir


## DTC P0504: Brake Switch “A”/“B” Correlation (For J20 Engine)

S5JB0A1104096

### Wiring Diagram

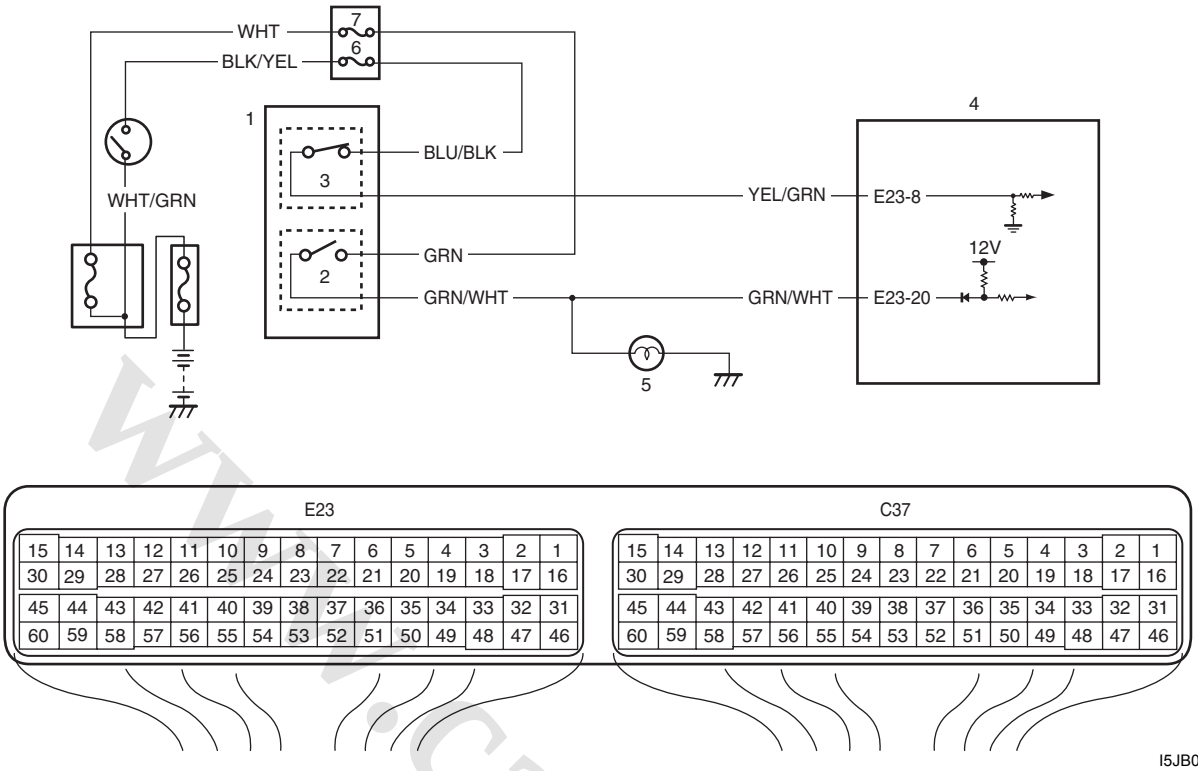


I5JB0A110107-02

| | | | |
|---|---|---|---|
| 1. Stop lamp (brake pedal) switch | 3. Brake pedal switch | 5. Stop lamp | 7. “STOP” fuse |
| 2. Stop lamp switch | 4. ECM | 6. “CRUISE” fuse | |

### DTC Detecting Condition and Trouble Area

| DTC detecting condition | Trouble area |
|---|---|
| Brake pedal switch signal is inconsistent with stop lamp switch signal.<br>(1 driving cycle detection logic but MIL does not light up) | • Stop lamp (brake pedal) switch and/or its circuit<br>• ECM |

### DTC Confirmation Procedure

1) With ignition switch turned OFF, connect scan tool to DLC.
2) Turn ON ignition switch and clear DTC.
3) Start engine and warm up to normal operating temperature. (ECT approx. 90 – 95 °C, 194 – 203 °F)
4) Drive vehicle at 50 km/h (80 mph) or higher for 3 min. or more.
5) Stop vehicle.
6) Depress brake pedal for 3 times.
7) Check DTC and pending DTC.

www.cargeek.ir

www.CarGeek.ir

## DTC Troubleshooting

**NOTE**

**Before this trouble shooting is performed, read the precautions for DTC troubleshooting referring to "Precautions For DTC Troubleshooting: ".**

| Step | Action | Yes | No |
|---|---|---|---|
| 1 | *Was "Engine and Emission Control System Check" performed?* | Go to Step 2. | Go to "Engine and Emission Control System Check: ". |
| 2 | **Stop lamp (brake pedal) switch check**<br>1) Check stop lamp (brake pedal) switch referring to "Stop (Brake) Lamp Switch Inspection: in Section 9B".<br>*Is it in good condition?* | Go to Step 3. | Replace stop lamp (brake pedal) switch. |
| 3 | **Stop lamp (brake pedal) switch power circuit check**<br>1) Disconnect connector from stop lamp (brake pedal) switch connector with ignition switch turned OFF.<br>2) Check for proper connection to switch connector.<br>3) If connection are OK, measure voltage between each "BLU/BLK" wire terminal and "GRN" wire terminal of stop lamp switch connector and vehicle body ground with ignition switch tuned ON.<br>*Is each measured voltage 10 – 14 V?* | Go to Step 4. | Check related fuse and repair defective circuit. |
| 4 | **Stop lamp (brake pedal) switch signal circuit check**<br>1) Disconnect connectors from ECM with ignition switch turned OFF.<br>2) Check for proper connection of each switch circuit terminal to ECM connector.<br>3) If connections are OK, check stop lamp switch circuit for the following.<br>• Resistance of each "YEL/GRN" wire terminal and "GRN/WHT" wire terminal of stop lamp (brake pedal) switch between stop lamp (brake pedal) switch connector and ECM connector is less than 1 Ω (continuity check)<br>• Resistance between "YEL/GRN" wire terminal and "GRN/WHT" wire terminal of stop lamp (brake pedal) switch connector are infinity (no continuity check)<br>• Resistance between each "YEL/GRN" wire terminal and "GRN/WHT" wire terminal of stop lamp (brake pedal) switch connector and vehicle body ground is infinity (ground short check)<br>• Voltage of between each "YEL/GRN" wire terminal and "GRN/WHT" wire terminal of stop lamp (brake pedal) switch connector and vehicle body ground is 0 V with ignition switch tuned ON (power short check)<br>*Is it in good condition?* | Substitute a known-good ECM and recheck. | Repair or replace defective wire. |

www.cargeek.ir

www.CarGeek.ir


## DTC P0532: A/C Refrigerant Pressure Sensor Circuit Low

S5JB0A1104051

### Wiring Diagram

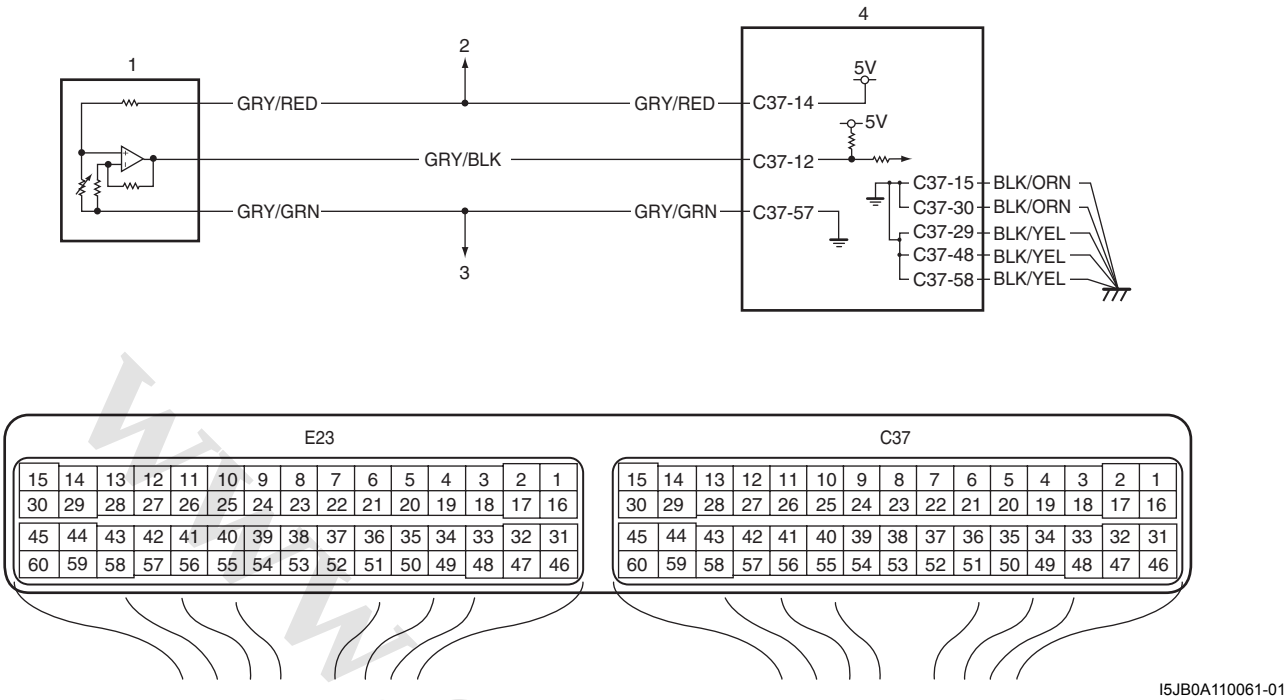


I5JB0A110061-01

| | |
|---|---|
| 1. A/C refrigerant pressure sensor | 3. To other sensors |
| 2. To electric load current sensor (for J20 engine) and MAP sensor | 4. ECM |

### DTC Detecting Condition and Trouble Area

| DTC detecting condition | Trouble area |
|---|---|
| A/C refrigerant pressure sensor signal voltage is less than 0.15 V for 0.5 sec. continuously.<br>(1 driving detection logic but MIL does not light up) | • A/C refrigerant pressure sensor circuit<br>• A/C refrigerant pressure sensor<br>• ECM |

**NOTE**

**When DTC P0107 and P1501 are indicated together, it is possible that “GRY/RED” wire circuit open.**

### DTC Confirmation Procedure

1) Connect scan tool to DLC with ignition switch turned OFF.
2) Turn ON ignition switch and clear DTC using scan tool.
3) Check DTC and pending DTC.

www.cargeek.ir

www.CarGeek.ir

## DTC Troubleshooting

**NOTE**

**Before this trouble shooting is performed, read the precautions for DTC troubleshooting referring to "Precautions For DTC Troubleshooting: ".**

| Step | Action | Yes | No |
|---|---|---|---|
| 1 | *Was "Engine and Emission Control System Check" performed?* | Go to Step 2. | Go to "Engine and Emission Control System Check: ". |
| 2 | **A/C refrigerant pressure sensor power supply circuit check**<br>1) Disconnect connector from A/C refrigerant pressure sensor with ignition switch turned OFF.<br>2) Check for proper connection of A/C refrigerant pressure sensor at "GRY/RED", "GRY/BLK" and "GRY/GRN" wire terminals.<br>3) Turn ON ignition switch, measure voltage between engine ground and "GRY/RED" wire terminal of A/C refrigerant pressure sensor connector.<br>*Is voltage 4 – 6 V?* | Go to Step 5. | Go to Step 3. |
| 3 | **A/C refrigerant pressure sensor power supply circuit check**<br>1) Disconnect connectors from ECM with ignition switch turned OFF.<br>2) Measure resistance between "GRY/RED" wire terminal of A/C refrigerant pressure sensor connector and "C37-14" terminal of ECM connector.<br>*Is resistance below 3 Ω?* | Go to Step 4. | "GRY/RED" wire is open circuit. |
| 4 | **A/C refrigerant pressure sensor power supply circuit check**<br>1) Measure resistance between engine ground and "C37-14" terminal of ECM connector.<br>*Is resistance infinity?* | Go to Step 6. | "GRY/RED" wire is shorted to ground circuit. |
| 5 | **A/C refrigerant pressure sensor signal circuit check**<br>1) Connect connectors to ECM.<br>2) Turn ON ignition switch, measure voltage between engine ground and "GRY/BLK" wire terminal of A/C refrigerant pressure sensor connector.<br>*Is voltage 4 – 6 V?* | Go to Step 7. | Go to Step 6. |
| 6 | **A/C refrigerant pressure sensor signal circuit check**<br>1) Disconnect connectors from ECM with ignition switch turned OFF.<br>2) Measure resistance between engine ground and "C37-12" terminal of ECM connector.<br>*Is resistance infinity?* | Go to Step 7. | "GRY/BLK" wire is shorted to ground circuit. |
| 7 | **A/C refrigerant pressure sensor check**<br>1) Check A/C refrigerant pressure sensor referring to "A/C Refrigerant Pressure Sensor and Its Circuit Inspection: in Section 7B"<br>*Is it in good condition?* | Substitute a known-good ECM and recheck. | Faulty A/C refrigerant pressure sensor. |

www.cargeek.ir

www.CarGeek.ir


## DTC P0533: A/C Refrigerant Pressure Sensor Circuit High

S5JB0A1104052

### Wiring Diagram

Refer to “DTC P0532: A/C Refrigerant Pressure Sensor Circuit Low: ”.

### DTC Detecting Condition and Trouble Area

| DTC detecting condition | Trouble area |
|---|---|
| A/C refrigerant pressure sensor signal voltage is higher than 4.93 V for 0.5 sec. continuously.<br>(1 driving detection logic but MIL does not light up) | • A/C refrigerant pressure sensor circuit<br>• A/C refrigerant pressure sensor<br>• ECM |

**NOTE**

**When DTC P0108, P0113 and P0118 are indicated together, it is possible that “GRY/GRN” wire circuit open.**

### DTC Confirmation Procedure

1) Connect scan tool to DLC with ignition switch turned OFF.
2) Turn ON ignition switch and clear DTC using scan tool.
3) Check DTC and pending DTC.

### DTC Troubleshooting

**NOTE**

**Before this trouble shooting is performed, read the precautions for DTC troubleshooting referring to “Precautions For DTC Troubleshooting: ”.**

| Step | Action | Yes | No |
|---|---|---|---|
| 1 | *Was “Engine and Emission Control System Check” performed?* | Go to Step 2. | Go to “Engine and Emission Control System Check: ” |
| 2 | **A/C refrigerant pressure sensor power supply circuit check**<br>1) Disconnect connector from A/C refrigerant pressure sensor with ignition switch turned OFF.<br>2) Check for proper connection of A/C refrigerant pressure sensor at “GRY/RED”, “GRY/BLK” and “GRY/GRN” wire terminals.<br>3) Turn ON ignition switch, measure voltage between engine ground and “GRY/RED” wire terminal of A/C refrigerant pressure sensor connector.<br>*Is voltage 4 – 6 V?* | Go to Step 4. | Go to Step 3. |
| 3 | **A/C refrigerant pressure sensor signal circuit check**<br>1) Turn ON ignition switch, measure voltage between engine ground and “GRY/BLK” wire terminal of A/C refrigerant pressure sensor connector.<br>*Is voltage 4 – 6 V?* | Go to Step 5. | Go to Step 4. |
| 4 | **A/C refrigerant pressure sensor signal circuit check**<br>1) Disconnect connectors from ECM with ignition switch turned OFF.<br>2) Measure resistance between “GRY/BLK” wire terminal of A/C refrigerant pressure sensor connector and “C37-12” terminal of ECM connector.<br>*Is resistance below 2 Ω?* | “GRY/BLK” wire is shorted to power supply circuit. | “GRY/BLK” wire is open or high resistance circuit. |

www.cargeek.ir

www.CarGeek.ir

| Step | Action | Yes | No |
|---|---|---|---|
| 5 | **A/C refrigerant pressure sensor ground circuit check**<br>1) Turn OFF ignition switch, measure resistance between engine ground and “GRY/GRN” wire terminal of A/C refrigerant pressure sensor connector.<br>*Is resistance below 5 Ω?* | Go to Step 7. | Go to Step 6. |
| 6 | **ECM ground circuit check**<br>1) Remove ECM from its bracket with ECM connectors connected.<br>2) Measure resistance between engine ground and “C37-57” terminal of ECM connector.<br>*Is resistance below 5 Ω?* | “GRY/GRN” wire is open or high resistance circuit. | ECM grounds “C37-58”, “C37-48”, “C37-30”, “C37-29” and/or “C37-15” is open or high resistance circuit. |
| 7 | **A/C refrigerant pressure sensor check**<br>1) Check A/C refrigerant pressure sensor referring to “A/C Refrigerant Pressure Sensor and Its Circuit Inspection: in Section 7B”<br>*Is it good condition?* | Substitute a known-good ECM and recheck. | Faulty A/C refrigerant pressure sensor. |

## DTC P0601 / P0602 / P0607: Internal Control Module Memory Check Sum Error / Control Module Programming Error / Control Module Performance

S5JB0A1104053

### System Description

Internal control module is installed in ECM.

### DTC Detecting Condition and Trouble Area

| DTC detecting condition | Trouble area |
|---|---|
| **DTC P0601:**<br>Data write error or check sum error<br>(1 driving cycle detection logic)<br>**DTC P0602:**<br>Data programming error<br>(1 driving cycle detection logic)<br>**DTC P0607:**<br>Data programming error<br>(1 driving cycle detection logic) | ECM |

### DTC Confirmation Procedure

1) Connect scan tool to DLC with ignition switch turned OFF.
2) Turn ON ignition switch and clear DTC, pending DTC and freeze frame data by using scan tool.
3) Start engine and run it at idle if possible.
4) Check DTC and pending DTC by using scan tool.

### DTC Troubleshooting

**NOTE**

**Before this trouble shooting is performed, read the precautions for DTC troubleshooting referring to “Precautions For DTC Troubleshooting: ”.**

www.cargeek.ir

www.CarGeek.ir


| Step | Action | Yes | No |
|---|---|---|---|
| 1 | **DTC recheck**<br>1) Clear DTC referring to “DTC Clearance: ”.<br>2) Turn OFF ignition switch.<br>3) Turn ON ignition switch and check DTC.<br>*Is DTC P0601 or P0607 still indicated?* | Go to Step 2. | Intermittent trouble.<br>Check for intermittent referring to “Intermittent and Poor Connection Inspection: in Section 00” |
| 2 | **ECM power and ground circuit check**<br>1) Check that ECM power supply circuit and ECM ground circuit is in good condition referring to “ECM Power and Ground Circuit Check: ”.<br>*Are check results OK?* | Substitute a known-good ECM and recheck. | Repair ECM power or ground circuit. |

## DTC P0616: Starter Relay Circuit Low

S5JB0A1104054

### Wiring Diagram

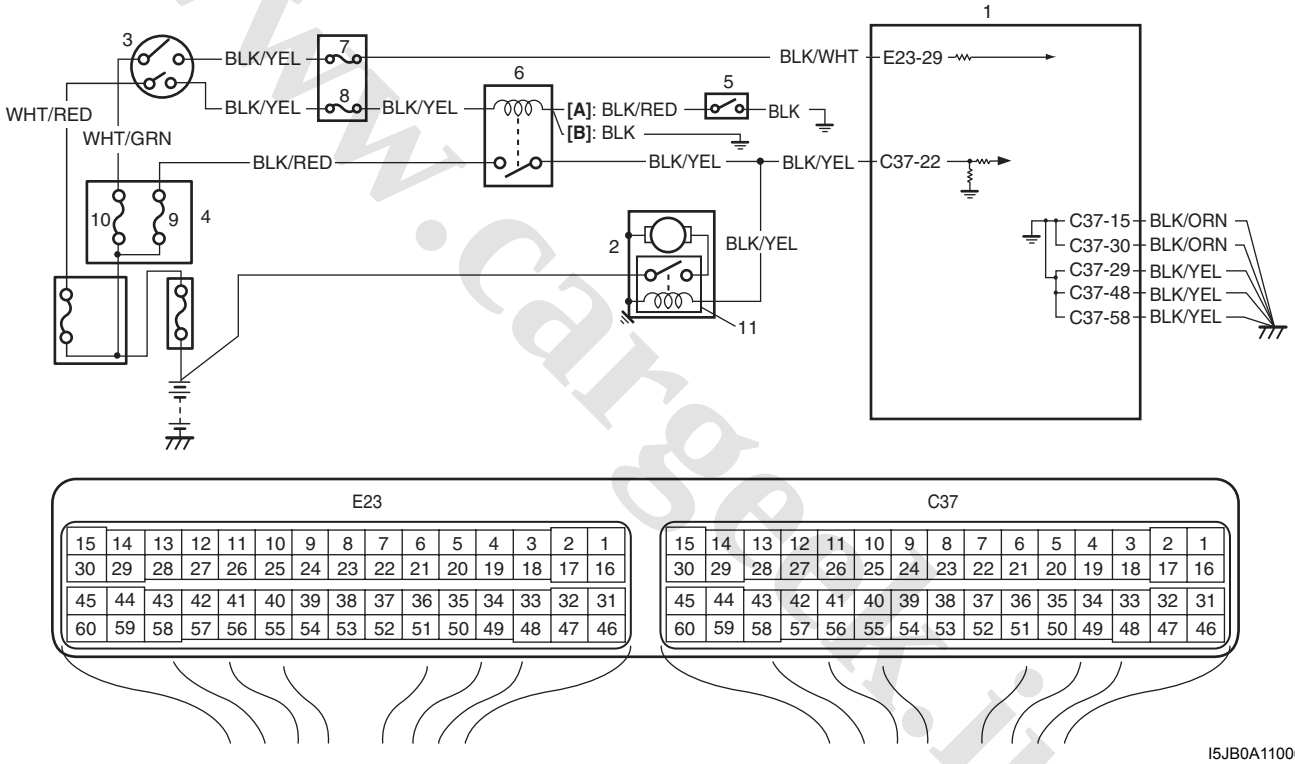


I5JB0A110062-02

| | | |
|---|---|---|
| [A]: For A/T model | 4. Fuse box No.2 | 9. “STR MOT” fuse |
| [B]: For M/T model | 5. Transmission range switch (for A/T model) | 10. “IGN” fuse |
| 1. ECM | 6. Starting motor control relay | 11. Starting motor magnet switch |
| 2. Starter motor | 7. “IG COIL” fuse | |
| 3. Ignition switch | 8. “ST SIG” fuse | |

### DTC Detecting Condition and Trouble Area

| DTC detecting condition | Trouble area |
|---|---|
| Engine starts even though vehicle is at stop and engine starter signal is low voltage.<br>(2 driving cycle detection logic) | • Engine starter signal circuit<br>• ECM |

www.cargeek.ir

www.CarGeek.ir

**DTC Confirmation Procedure**

1) With ignition switch turned OFF, connect scan tool.
2) Turn ON ignition switch and clear DTC using scan tool.
3) Start engine.
4) Check DTC and pending DTC.

**DTC Troubleshooting**

**NOTE**

**Before this trouble shooting is performed, read the precautions for DTC troubleshooting referring to "Precautions For DTC Troubleshooting: ".**

| Step | Action | Yes | No |
|---|---|---|---|
| 1 | *Was "Engine and Emission Control System Check" performed?* | Go to Step 2. | Go to "Engine and Emission Control System Check: ". |
| 2 | **Signal circuit check**<br>1) Turn OFF ignition switch.<br>2) Remove ECM from its bracket with ECM connectors connected.<br>3) Measure voltage at terminal "C37-22" of ECM connector, under following condition.<br>**Voltage at terminal "C37-22" of ECM connector**<br>**While engine cranking: 6 – 14 V**<br>**After starting engine: 0 – 1 V**<br>*Is each voltage within specified range?* | Poor "C37-22" connection or intermittent trouble.<br>Check for intermittent referring to "Intermittent and Poor Connection Inspection: in Section 00".<br>If wire and connections are OK, substitute a known-good ECM and recheck. | "BLK/YEL" wire is open or high resistance circuit. |

www.cargeek.ir

www.CarGeek.ir


## DTC P0617: Starter Relay Circuit High

S5JB0A1104055

### Wiring Diagram

Refer to “DTC P0616: Starter Relay Circuit Low: ”.

### DTC Detecting Condition and Trouble Area

| DTC detecting condition | Trouble area |
|---|---|
| Engine starter signal is high voltage for 180 seconds continuously while engine is running.<br>(2 driving cycle detection logic) | • Engine starter signal circuit<br>• ECM |

### DTC Confirmation Procedure

1) With ignition switch turned OFF, connect scan tool.
2) Turn ON ignition switch and clear DTC using scan tool.
3) Start engine and run it at idle for 3 min. or more.
4) Check DTC and pending DTC.

### DTC Troubleshooting

**NOTE**

**Before this trouble shooting is performed, read the precautions for DTC troubleshooting referring to “Precautions For DTC Troubleshooting: ”.**

| Step | Action | Yes | No |
|---|---|---|---|
| 1 | *Was “Engine and Emission Control System Check” performed?* | Go to Step 2. | Go to “Engine and Emission Control System Check: ”. |
| 2 | **Starter signal check**<br>1) Turn OFF ignition switch.<br>2) Remove ECM from its bracket with ECM connectors connected.<br>3) Start engine, measure voltage between “C37-22” terminal of ECM connector and vehicle body ground.<br>*Is voltage 0 – 1 V?* | Intermittent trouble. Check for intermittent referring to “Intermittent and Poor Connection Inspection: in Section 00”. If OK, substitute a known-good ECM and recheck. | Go to Step 3. |
| 3 | **Wire circuit check**<br>1) Disconnect starting motor control relay in fuse box No.2 with ignition switch turned OFF.<br>2) Check for proper connection to starting motor control relay at “BLK/YEL”, “BLK/RED” and “BLK” (for M/T model) wire terminals.<br>3) Disconnect connector from starting motor.<br>4) Measure voltage between “C37-22” terminal of ECM connector and vehicle body ground with ignition switch turned ON.<br>*Is voltage 0 – 1 V?* | Go to Step 4. | “BLK/YEL” wire is shorted to power circuit.<br>If wires are OK, substitute a known good ECM and recheck. |
| 4 | **Wire circuit check**<br>1) Measure voltage between “BLK/YEL” wire terminal for coil side of starting motor control relay connector coil side and vehicle body ground with ignition switch turned ON.<br>*Is voltage 0 – 1 V?* | Check starting motor control relay. If OK, substitute a known-good ECM and recheck. | Check ignition switch referring to “Ignition Switch Inspection: in Section 9C”.<br>If ignition switch is OK, check for short circuit between ignition switch and starting motor control relay to power circuit. |

www.cargeek.ir

www.CarGeek.ir

## DTC P0620: Generator Control Circuit

S5JB0A1104090

### System and Wiring Diagram

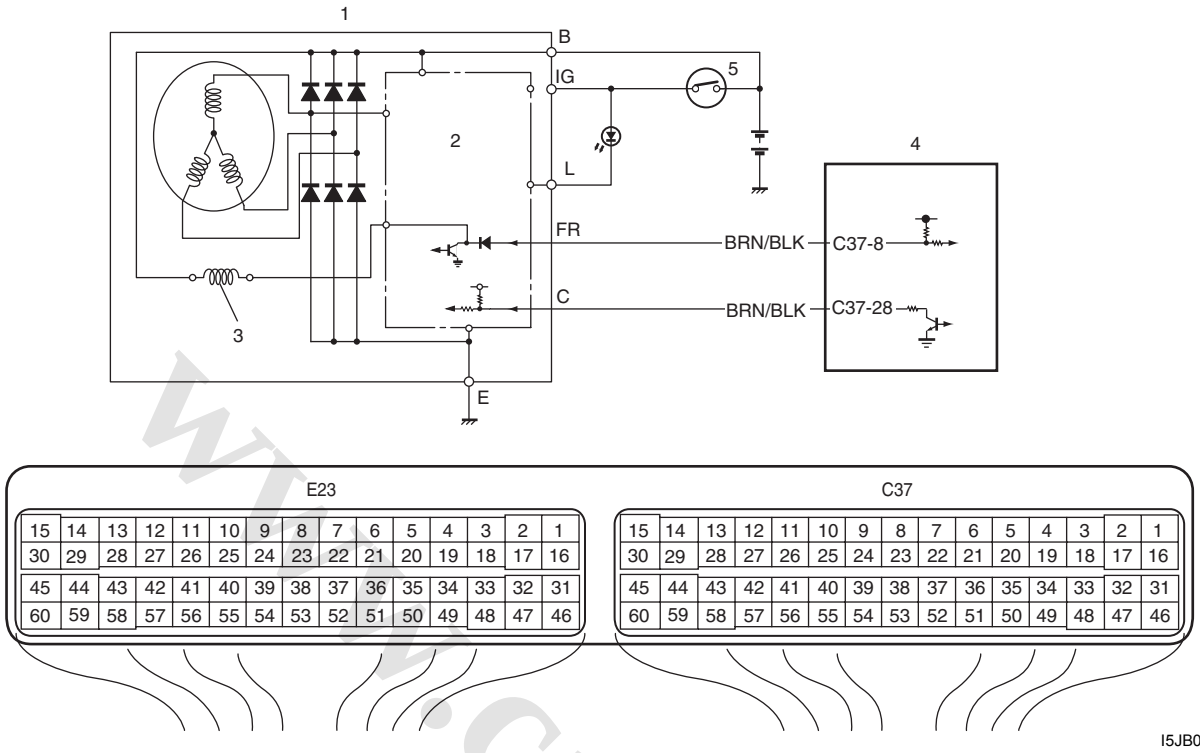


I5JB0A110063-01

| | | |
|---|---|---|
| 1. Generator | 3. Field coil | 5. Ignition switch |
| 2. IC regulator | 4. ECM | 6. Charge lamp |

### Generator Control System Description

Refer to “Generator Control System Description: ”.

### DTC Detecting Condition and Trouble Area

| DTC detecting condition | Trouble area |
|---|---|
| • Battery voltage is higher than specification even through generator control is maximum regulation (duty 100%).<br>• Battery voltage is lower than specification even through generator control is minimum regulation (duty 0%) and electric load is less than 20 A. | Generator and/or its circuit<br>Electric load current sensor (for J20 engine)<br>ECM |

### DTC Confirmation Procedure

1) With ignition switch turned OFF, connect scan tool to DLC
2) Turn ON ignition switch and clear DTC.
3) Make sure that all accessory switches are tuned OFF.
4) Start engine and warm it up to normal operating temperature (ECT approx. 90 – 95 °C, 193 – 203 °F).
5) Turn ON the following accessory switches.
   - Head light switch.
   - Blower motor switch (max position).
   - Rear defogger switch.
6) Increase engine speed to 4000 rpm and keep it for 10 sec or more.
7) Decrease engine speed to idle.
8) Check DTC and pending DTC.

www.cargeek.ir

www.CarGeek.ir


## DTC Troubleshooting

**NOTE**

**Before this trouble shooting is performed, read the precautions for DTC troubleshooting referring to "Precautions For DTC Troubleshooting: ".**

| Step | Action | Yes | No |
|---|---|---|---|
| 1 | *Was "Engine and Emission Control System Check" performed?* | Go to Step 2. | Go to "Engine and Emission Control System Check: ". |
| 2 | **Generator control circuit check**<br>1) Disconnect connector from generator and ECM with ignition switch turned OFF.<br>2) Check for proper connection of wire terminal to generator connector and to ECM connector.<br>3) If connections are OK, check generator control circuit for the following.<br>• Resistance of generator control circuit wire between generator connector and ECM connector is less than 1 Ω (continuity check)<br>• Resistance between generator control circuit wire of generator connector and vehicle body ground is infinity (ground circuit short check)<br>• Voltage between generator control circuit wire of generator connector and vehicle body ground is 0 V with ignition switch tuned ON (power circuit short check)<br>*Are they in good condition?* | Go to Step 3. | Repair or replace defective wire. |
| 3 | **Generator check**<br>1) Check for generator output referring to "Generator Test (Undercharged Battery Check): in Section 1J".<br>*Is check result satisfactory?* | For J20 engine, go to Step 4.<br>For M16 engine, Substitute a known good ECM and recheck. | Repair or replace generator. |
| 4 | **Electric load current sensor check (for J20 engine)**<br>1) Check for electric load current sensor output referring to "Electric Load Current Sensor On-Vehicle Inspection (For J20 Engine): in Section 1C".<br>*Is check result satisfactory?* | Substitute a known good ECM and recheck. | Replace electric load current sensor. |

www.cargeek.ir

www.CarGeek.ir

## DTC P0625 / P0626: Generator Field Terminal Circuit Low / High

S5JB0A1104091

### System and Wiring Diagram

Refer to “DTC P0620: Generator Control Circuit: ”.

### Generator Control System Description

Refer to “Generator Control System Description: ”.

### DTC Detecting Condition and Trouble Area

| DTC detecting condition | Trouble area |
|---|---|
| **P0625:**<br>Generator field coil duty is 100% (low voltage) for more than specified time even through generator control is maximum regulation (control duty 100%) or Generator field coil duty is 100% (low voltage) when engine is starting.<br>**P0626:**<br>Generator field coil duty is 0% (high voltage) for more than specified time even through generator control is minimum regulation (control duty 0%). | Generator and/or its circuit<br>ECM |

### DTC Confirmation Procedure

1) With ignition switch turned OFF, connect scan tool to DLC.
2) Turn ON ignition switch and clear DTC.
3) Make sure that all accessory switch is tuned OFF.
4) Start engine and warm it up to normal operating temperature (ECT approx. 90 – 95 °C, 193 – 203 °F).
5) Turn ON following accessory switch.
   - Head lights switch.
   - Blower motor switch (max position).
   - Rear defogger switch.
6) Increase engine speed to 4000 rpm and keep it for 10 sec. or more.
7) Decrease engine speed to idle.
8) Check DTC and pending DTC.

www.cargeek.ir
www.cargeek.ir

www.CarGeek.ir


## DTC Troubleshooting

**NOTE**

**Before this trouble shooting is performed, read the precautions for DTC troubleshooting referring to "Precautions For DTC Troubleshooting: ".**

| Step | Action | Yes | No |
|---|---|---|---|
| 1 | *Was "Engine and Emission Control System Check" performed?* | Go to Step 2. | Go to "Engine and Emission Control System Check: ". |
| 2 | **Generator control circuit check**<br>1) Disconnect connector from generator and ECM with ignition switch turned OFF.<br>2) Check for proper connection of wire terminal to generator connector and to ECM connector.<br>3) If connections are OK, check generator control (generator "C" terminal) circuit and field coil monitor (generator "FR" terminal) circuit for the following.<br>• Resistance of each generator control wire and field coil monitor wire between generator connector and ECM connector is less than 1 Ω (continuity check)<br>• Resistance between generator control wire and field coil monitor wire of generator connector is infinity (insulation check)<br>• Resistance between each generator control wire and field coil monitor wire of generator connector and vehicle body ground is infinity (ground circuit short check)<br>• Voltage between each generator control wire and field coil monitor wire of generator connector and vehicle body ground is 0 V with ignition switch tuned ON (power circuit short check)<br>*Are they in good condition?* | Go to Step 3. | Repair or replace defective wire. |
| 3 | **Generator check**<br>1) Check for generator output referring to "Generator Test (Undercharged Battery Check): in Section 1J" and "Generator Inspection: in Section 1J".<br>*Is check result satisfactory?* | Substitute a known good ECM and recheck. | Repair or replace generator. |

www.cargeek.ir

www.CarGeek.ir

## DTC P0660: Intake Manifold Tuning Valve Control Circuit / Open (For J20 Engine)

S5JB0A1104092

### Wiring Diagram

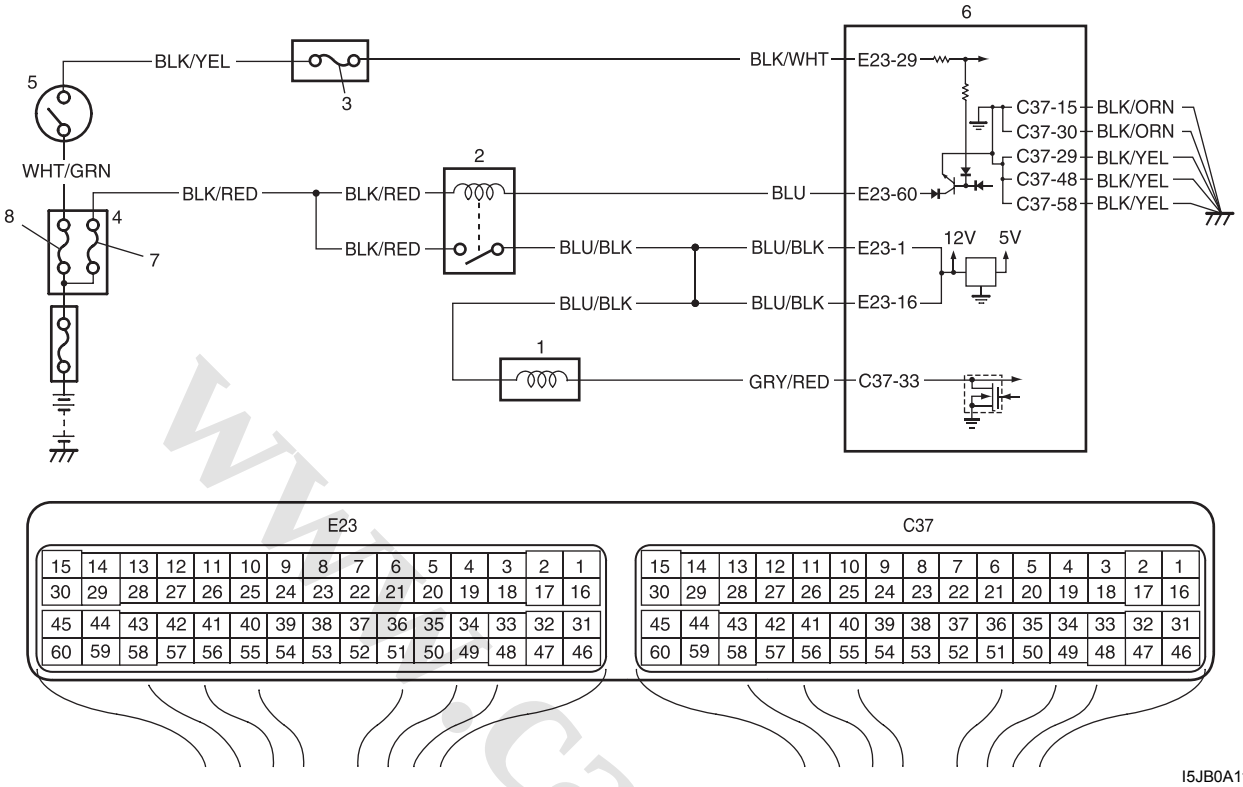


I5JB0A110064-02

| | | |
|---|---|---|
| 1. IMT vacuum solenoid valve | 4. Fuse box No.2 | 7. "FI" fuse |
| 2. Main relay | 5. Ignition switch | 8. "IGN" fuse |
| 3. "IG COIL" fuse | 6. ECM | |

### DTC Detecting Condition and Trouble Area

| DTC detecting condition | Trouble area |
|---|---|
| Monitor signal of IMT vacuum solenoid valve is different from command signal. (Circuit open or short)<br>(1 driving cycle detection logic but MIL does not light up) | • IMT vacuum solenoid valve<br>• IMT vacuum solenoid valve circuit<br>• ECM |

### DTC Confirmation Procedure

1) With ignition switch OFF, connect scan tool to DLC.
2) Turn ON ignition switch and clear DTC using scan tool.
3) Start engine and warm up normal operating temperature.
4) Run engine at idle speed for 3 min. or more.
5) Check DTC.

www.cargeek.ir

www.CarGeek.ir


**DTC Troubleshooting**

**NOTE**

**Before this trouble shooting is performed, read the precautions for DTC troubleshooting referring to "Precautions For DTC Troubleshooting: ".**

| Step | Action | Yes | No |
|---|---|---|---|
| 1 | *Was "Engine and Emission Control System Check" performed?* | Go to Step 2. | Go to "Engine and Emission Control System Check: ". |
| 2 | **IMT vacuum solenoid valve power supply circuit check**<br>1) Turn OFF ignition switch and disconnect connector from IMT vacuum solenoid valve.<br>2) Measure voltage between engine ground and "BLU/BLK" wire terminal of IMT vacuum solenoid valve connector with ignition switch turned ON.<br>*Is it voltage 10 – 14 V?* | Go to Step 3. | "BLU/BLK" wire is open circuit. |
| 3 | **Wire circuit check**<br>1) Disconnect connectors from ECM with ignition switch turned OFF.<br>2) Measure resistance between "C37-33" terminal of ECM connector and vehicle body ground.<br>*Is resistance infinity?* | Go to Step 4. | "GRY/RED" wire is shorted to ground circuit. |
| 4 | **Wire circuit check**<br>1) Measure voltage between "C37-33" terminal of ECM connector and vehicle body ground with ignition switch turned ON.<br>*Is voltage 0 V?* | Go to Step 5. | "GRY/RED" wire is shorted to other circuit. |
| 5 | **Wire circuit check**<br>1) Connect connector to IMT vacuum solenoid valve with ignition switch turned OFF.<br>2) Turn ON ignition switch and measure voltage between "C37-33" terminal of ECM connector and vehicle body ground.<br>*Is it voltage 10 – 14 V?* | Go to Step 6. | "GRY/RED" wire is open circuit. |
| 6 | **IMT vacuum solenoid valve check**<br>1) Check for coil resistance of IMT vacuum solenoid valve referring to "Vacuum Tank Assembly Inspection (For J20 Engine): in Section 1C".<br>*Is it in good condition?* | Go to Step 7. | Faulty IMT vacuum solenoid valve. |
| 7 | **IMT vacuum solenoid circuit check**<br>1) With ignition switch turn OFF, measure resistance between "E23-1/16" terminal and "C37-33" terminal of ECM connector.<br>*Is resistance below 40 Ω at 20 °C, 68 °F?* | Faulty ECM. Substitute a known-good ECM and recheck. | "GRY/RED" and/or "BLU/BLK" wire are high resistance circuit. |

www.cargeek.ir

www.CarGeek.ir

## DTC P1501 / P1502: Electric Load Current Sensor Circuit Low / High

S5JB0A1104093

### System and Wiring Diagram

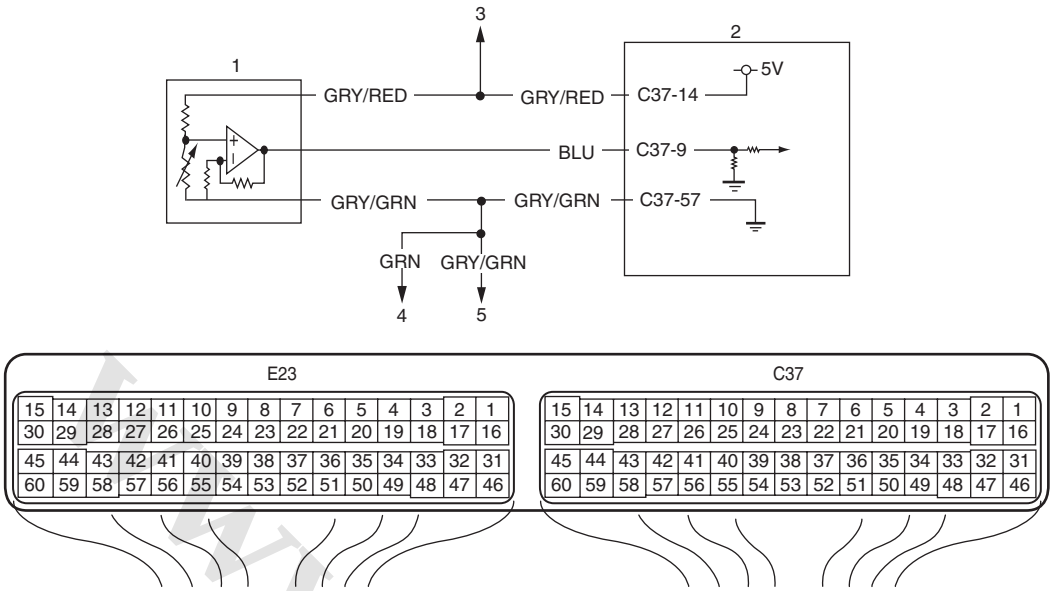


I5JB0A110065-01

| | | |
|---|---|---|
| 1. Electric load current sensor | 3. To other sensors (MAP, CO adjust resister (if equipped), A/C refrigerant pressure (if equipped) | 5. To other sensors (IAT, ECT, MAP, CO adjust resister (if equipped), A/C refrigerant pressure (if equipped) |
| 2. ECM | 4. To HO2S-2 | |

### Electric Load Current Sensor Description

Refer to “Generator Control System Description: ”.

### DTC Detecting Condition and Trouble Area

| DTC detecting condition | Trouble area |
|---|---|
| **P1501:**<br>Electric load current sensor circuit voltage is lower than specified range.<br>**P1502:**<br>Electric load current sensor circuit voltage is higher than specified range. | Electric load current sensor and/or its circuit<br>ECM |

**NOTE**

**When DTC P0107 and P0532 are indicated together, it is possible that “GRY/RED” wire circuit open.**

### DTC Confirmation Procedure

1) With ignition switch turned OFF, connect scan tool to DLC.
2) Turn ON ignition switch and clear DTC.
3) Make sure that all accessory switch is tuned OFF.
4) Start engine and warm it up to normal operating temperature (ECT approx. 90 – 95 °C, 193 – 203 °F).
5) Increase engine speed to 3000 rpm.
6) In this state, Turn ON following accessory switch.
   - Head lights switch.
   - Blower motor switch (max position).
   - Rear defogger switch.
7) Decrease engine speed to idle.
8) Check DTC and pending DTC.

www.cargeek.ir

www.CarGeek.ir


**DTC Troubleshooting**

**NOTE**

**Before this trouble shooting is performed, read the precautions for DTC troubleshooting referring to "Precautions For DTC Troubleshooting: ".**

| Step | Action | Yes | No |
|---|---|---|---|
| 1 | *Was "Engine and Emission Control System Check" performed?* | Go to Step 2. | Go to "Engine and Emission Control System Check: ". |
| 2 | **Electric load current sensor power/ ground circuit check**<br>1) Disconnect connector from electric load current sensor with ignition switch turned OFF.<br>2) Check for proper connection of wire terminal to electric load current sensor connector.<br>3) If connections are OK, check electric load current sensor circuit for the following.<br>• Resistance between ground circuit wire of electric load current sensor connector and vehicle body ground is less than 1 Ω (ground circuit check)<br>• Voltage between 5 V power circuit wire of electric load current sensor connector and vehicle body ground is 4 – 6 V with ignition switch tuned ON (power circuit check)<br>*Is it in good condition?* | Go to Step 3. | Repair or replace defective wire and/or check connected sensors to this circuit. |
| 3 | **Electric load current sensor output circuit check**<br>1) Disconnect connector from ECM with ignition switch turned OFF.<br>2) Check for proper connection of electric load current sensor wire terminal to ECM connector.<br>3) If connections are OK, check electric load current sensor circuit for the following.<br>• Resistance of electric load current sensor output circuit wire between electric load current sensor connector and ECM connector is less than 1 Ω (continuity check)<br>• Resistance between electric load current sensor output circuit wire of electric load current sensor connector and vehicle body ground is infinity (insulation check)<br>• Voltage between electric load current sensor output circuit wire of electric load current sensor connector and vehicle body ground is 0 V with ignition switch tuned ON (power circuit short check)<br>*Is it in good condition?* | Go to Step 4. | Repair or replace defective wire. |
| 4 | **Electric load current sensor check**<br>1) Check for electric load current sensor output referring to "Electric Load Current Sensor On-Vehicle Inspection (For J20 Engine): in Section 1C".<br>*Is check result satisfactory?* | Substitute a known good ECM and recheck. | Replace electric load current sensor. |

www.cargeek.ir

www.CarGeek.ir

## DTC P1510: ECM Back-Up Power Supply Malfunction

S5JB0A1104056

### Wiring Diagram

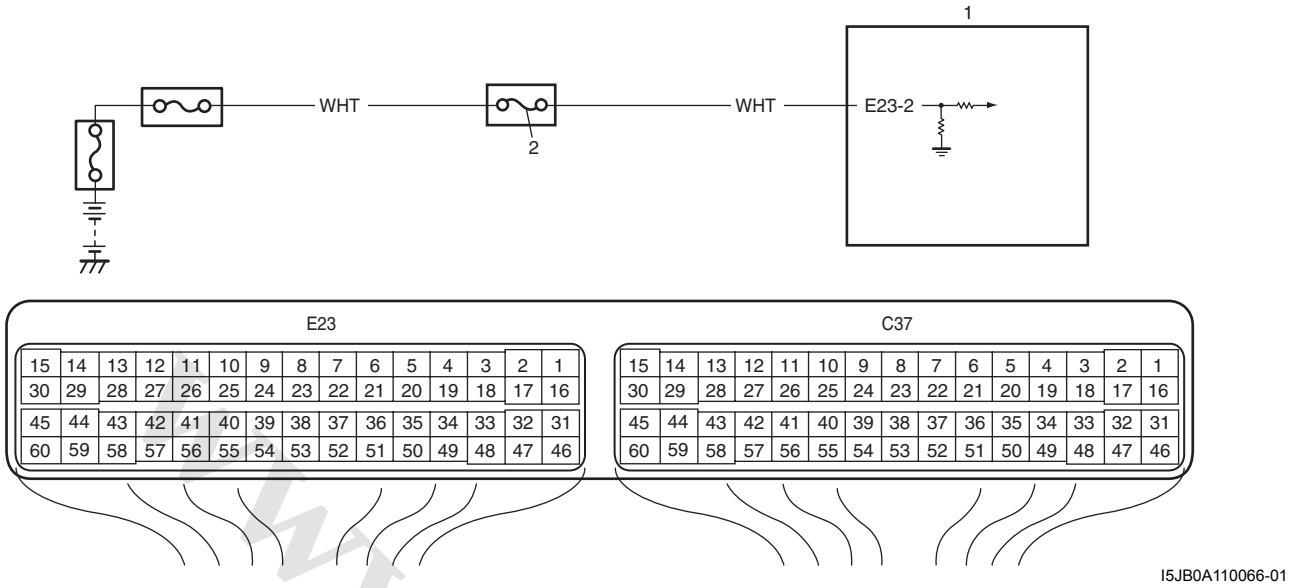


| | |
|---|---|
| 1. | ECM |
| 2. | “DOME” fuse |

### Circuit Description

Battery voltage is supplied so that DTC memory, values for engine control learned by ECM, etc. are kept in ECM even when the ignition switch is turned OFF.

### DTC Detecting Condition and Trouble Area

| DTC detecting condition | Trouble area |
|---|---|
| Back-up power circuit voltage is no inputted for 5 seconds continuously while engine is running.<br>(1 driving cycle detection logic) | Battery voltage supply circuit |

### DTC Confirmation Procedure

1) Connect scan tool to DLC with ignition switch turned OFF.
2) Turn ON ignition switch and clear DTC using scan tool and run engine at idle speed for 1 min.
3) Check DTC and pending DTC.

www.cargeek.ir

www.CarGeek.ir


### DTC Troubleshooting

**NOTE**

**Before this trouble shooting is performed, read the precautions for DTC troubleshooting referring to "Precautions For DTC Troubleshooting: ".**

| Step | Action | Yes | No |
|---|---|---|---|
| 1 | *Was "Engine and Emission Control System Check" performed?* | Go to Step 2. | Go to "Engine and Emission Control System Check: ". |
| 2 | **Battery voltage supply circuit check**<br>1) Turn OFF ignition switch.<br>2) Remove ECM from its bracket with ECM connectors connected.<br>3) With engine running, measure voltage between "E23-2" terminal of ECM connector and engine ground.<br>*Is voltage 10 – 14 V?* | Poor "E23-2" connection or intermittent trouble.<br>Check for intermittent referring to "Intermittent and Poor Connection Inspection: in Section 00".<br>If wire and connections are OK, substitute a known-good ECM and recheck. | "DOME" fuse blown, "WHT" wire is circuit open or short circuit. |

## DTC P1603: TCM Trouble Code Detected (For J20 Engine)

S5JB0A1104057

### Wiring Diagram

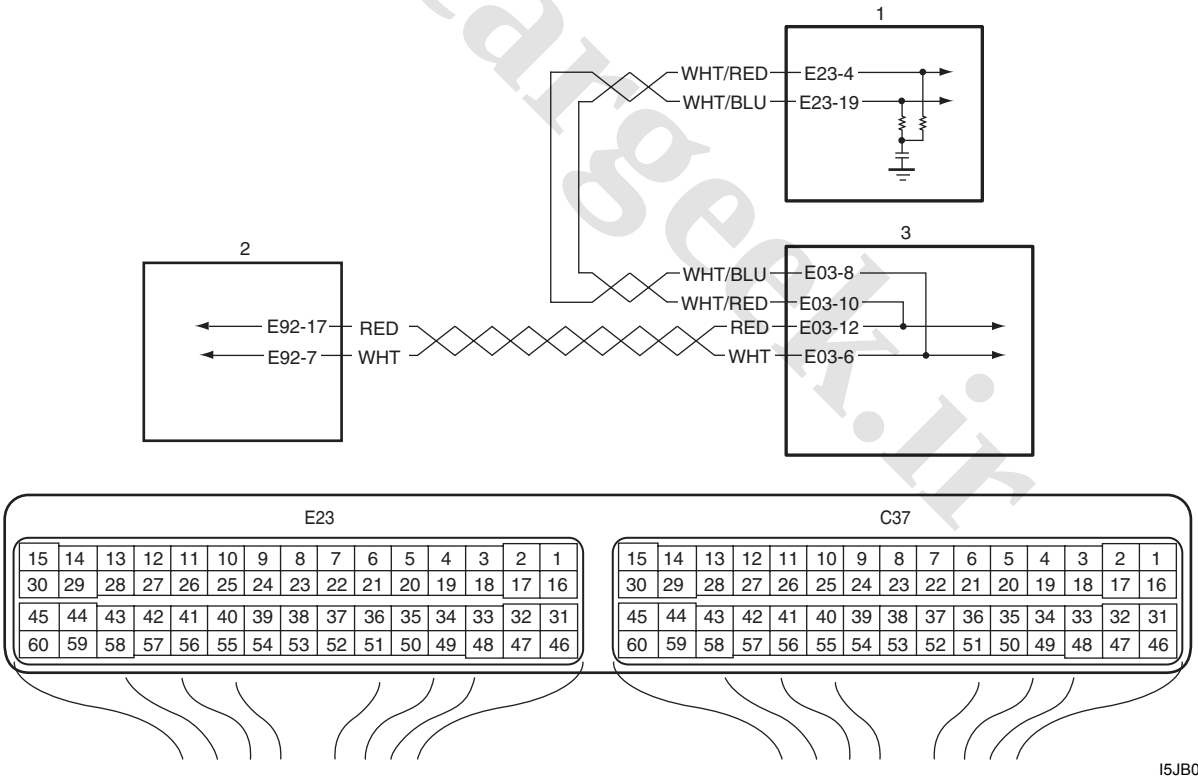


I5JB0A110067-02

| | | |
|---|---|---|
| 1. ECM | 2. TCM (for A/T model) | 3. ABS hydraulic unit / control module assembly |

### DTC Detecting Condition

When ECM receives a trouble code from TCM, which indicates that some problem occurred in sensor circuits and its calculated values used for operations such as idle speed control, engine power control, and so on by TCM, ECM sets DTC P1603. (TCM outputs the trouble code to ECM when TCM can not compute the engine control signal due to malfunctions of sensor circuits used for gear shift control.)

www.cargeek.ir

www.CarGeek.ir

## DTC Troubleshooting

**NOTE**

**Before this trouble shooting is performed, read the precautions for DTC troubleshooting referring to "Precautions For DTC Troubleshooting: ".**

| Step | Action | Yes | No |
|---|---|---|---|
| 1 | *Was "Engine and Emission Control System Check" performed?* | Go to Step 2. | Go to "Engine and Emission Control System Check: ". |
| 2 | **DTC check**<br>1) Check DTC of TCM referring to "DTC Check: in Section 5A".<br>*Is there any DTC(s)?* | Go to applicable DTC diag. flow. | Substitute a known-good ECM and recheck. |

## DTC P1674: CAN Communication (Bus Off Error)

S5JB0A1104058

### Wiring Diagram

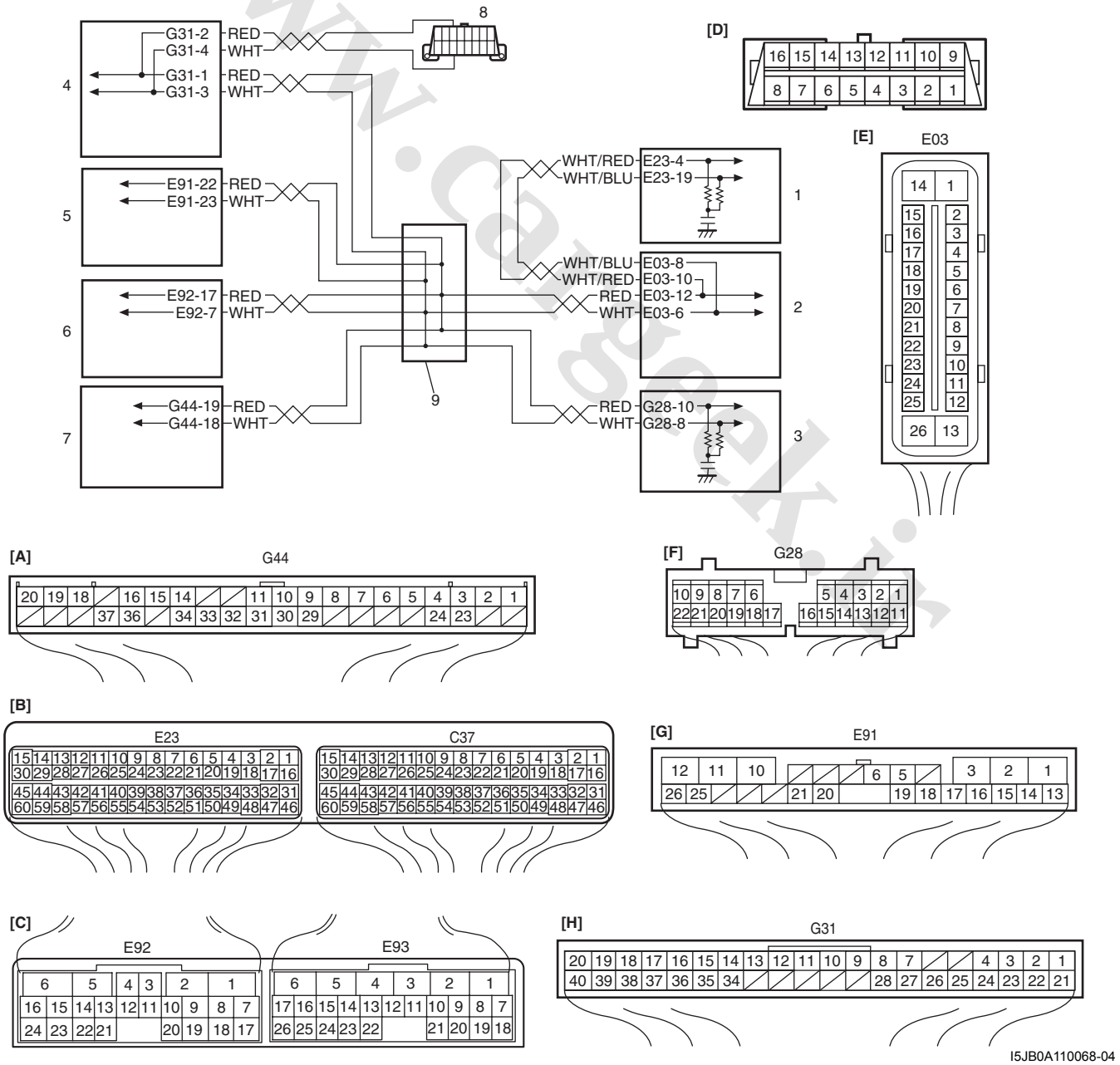


I5JB0A110068-04

www.cargeek.ir

www.CarGeek.ir


| | |
|---|---|
| [A]: Keyless start control module connector (if equipped) (viewed from harness side) | 2. ABS hydraulic unit / control module assembly |
| [B]: ECM connector (viewed from harness side) | 3. Combination meter |
| [C]: TCM connector (for A/T model) (viewed from harness side) | 4. BCM |
| [D]: DLC (viewed from terminal side) | 5. 4WD control module (for J20 engine) |
| [E]: ABS hydraulic unit / control module connector (viewed from terminal side) | 6. TCM (for A/T model) |
| [F]: Combination meter connector (viewed from harness side) | 7. Keyless start control module (if equipped) |
| [G]: 4WD control module connector (viewed from harness side) | 8. DLC |
| [H]: BCM connector (viewed from harness side) | 9. CAN circuit junction connector |
| 1. ECM | |

**DTC Detecting Condition and Trouble Area**

| DTC detecting condition | Trouble area |
|---|---|
| Transmission error that is inconsistent between transmission data and transmission monitor (CAN bus monitor) data is detected more than 7 times continuously. (1 driving detection logic) | • ECM<br>• BCM<br>• TCM (for A/T model)<br>• Keyless start control module (if equipped)<br>• ABS hydraulic unit / control module assembly<br>• 4WD control module (for J20 engine)<br>• Combination meter<br>• CAN communication line circuit |

**DTC Confirmation Procedure**

1) Connect scan tool to DLC with ignition switch turned OFF.
2) Turn ON ignition switch and clear DTC by using scan tool.
3) Start engine and run it for 1 min. or more.
4) Check DTC.

**DTC Troubleshooting**

**NOTE**

**Before this trouble shooting is performed, read the precautions for DTC troubleshooting referring to "Precautions For DTC Troubleshooting: ".**

| Step | Action | Yes | No |
|---|---|---|---|
| 1 | *Was "Engine and Emission Control System Check" performed?* | Go to Step 2. | Go to "Engine and Emission Control System Check: ". |
| 2 | **DTC check**<br>1) Connect scan tool to DLC with ignition switch turned OFF.<br>2) Check ECM, TCM (for A/T model), ABS hydraulic unit / control module assembly, 4WD control module (for J20 engine), keyless start control module (if equipped) and BCM for DTC.<br>*Is there any DTC(s) other than CAN communication DTC(s) at each control module (other than DTC P1618, P1674, P1676, P1678, P1685 in ECM, DTC P1774, P1777, P1778 in TCM (for A/T model), DTC U1073, U1100, U1101, U1121 in BCM, ABS hydraulic unit / control module assembly and 4WD control module (for J20 engine) and DTC No.31 / 33 in keyless start control module (if equipped))?* | Go to applicable DTC diag. flow. | Go to Step 3. |

www.cargeek.ir

www.CarGeek.ir

| Step | Action | Yes | No |
|---|---|---|---|
| 3 | **ECM, TCM (for A/T model), BCM, ABS hydraulic unit / control module assembly, 4WD control module (for J20 engine), combination meter and keyless start control module (if equipped) connectors check**<br>1) Check for proper connection at each ECM, TCM (for A/T model), BCM, ABS hydraulic unit / control module assembly, 4WD control module (for J20 engine), combination meter and keyless start control module (if equipped) connector terminals with ignition switch turned OFF.<br>2) If connections are OK, recheck ECM for DTC with engine running.<br>*Is there DTC P1674?* | Go to Step 4. | Intermittent trouble. Check for intermittent referring to “Intermittent and Poor Connection Inspection: in Section 00”. |
| 4 | **ECM power and ground circuit check**<br>1) Check ECM power and ground circuit referring to “ECM Power and Ground Circuit Check: ”.<br>*Are they in good condition?* | Go to Step 5. | Repair ECM power and/ or ground circuits. |
| 5 | **DTC check in BCM, TCM (for A/T model), ABS hydraulic unit / control module assembly, 4WD control module (for J20 engine) and keyless start control module (if equipped) (bus off)**<br>1) Check DTC(s) in TCM (for A/T model), ABS hydraulic unit / control module assembly, 4WD control module (for J20 engine) and BCM.<br>*Is there DTC(s) P1774 in TCM (for A/T model), U1073 in BCM, ABS hydraulic unit / control module assembly and 4WD control module (for J20 engine) and/or DTC No.33 in keyless start control module (if equipped)?* | Go to Step 6. | Go to Step 7. |
| 6 | **DTC check in ECM (bus off)**<br>1) Disconnect connectors from ECM with ignition switch turned OFF.<br>2) Check TCM (for A/T model), BCM, ABS hydraulic unit / control module assembly and 4WD control module (for J20 engine) for DTC(s).<br>*Is there DTC(s) P1774 in TCM (for A/T model), U1073 in BCM, ABS hydraulic unit / control module assembly and 4WD control module (for J20 engine) and/or DTC No.33 in keyless start control module (if equipped)?* | Go to Step 7. | “E23-4” or “E23-19” circuit wire between ECM and ABS hydraulic unit / control module is open or high resistance. If wires are OK, substitute a known-good ECM and recheck. |
| 7 | **DTC check in ECM**<br>1) Connect connectors to ECM and disconnect connector from BCM with ignition switch turned OFF.<br>2) Check ECM for DTC(s).<br>*Is there DTC P1674?* | Go to Step 8. | “G31-1” or “G31-3” circuit wire between BCM and CAN circuit junction connector is open or high resistance. If wires are OK, substitute a known-good BCM and recheck. |
| 8 | **DTC check in ECM**<br>1) Disconnect connectors from TCM (for A/T model) with ignition switch turned OFF.<br>2) Check ECM for DTC.<br>*Is there DTC P1674?* | Go to Step 9. | “E92-17” or “E92-7” circuit wire between TCM and CAN circuit junction connector is open or high resistance. If wires are OK, substitute a known-good TCM (for A/T model) and recheck. |

www.cargeek.ir

www.CarGeek.ir


| Step | Action | Yes | No |
|---|---|---|---|
| 9 | **DTC check in ECM**<br>1) Disconnect connector from keyless start control module (if equipped) with ignition switch turned OFF.<br>2) Check ECM for DTC.<br>*Is there DTC P1674?* | Go to Step 10. | "G44-19" or "G44-18" circuit wire between keyless start control module and CAN circuit junction connector is open or high resistance. If wires are OK, substitute a known-good keyless start control module and recheck. |
| 10 | **DTC check in ECM**<br>1) Disconnect connector from combination meter with ignition switch turned OFF.<br>2) Check ECM for DTC.<br>*Is there DTC P1674?* | Go to Step 11. | "G28-10" or "G28-8" circuit wire between combination meter and CAN circuit junction connector is open or high resistance. If wires are OK, substitute a known-good combination meter or keyless start control module (if equipped) and recheck. |
| 11 | **DTC check in ECM**<br>1) Disconnect connector from 4WD control module (for J20 engine) with ignition switch turned OFF.<br>2) Check ECM for DTC.<br>*Is there DTC P1674?* | Go to Step 12. | "E91-22" or "E91-23" circuit wire between 4WD control module and CAN circuit junction connector is open or high resistance. If wires are OK, substitute a known-good 4WD control module and recheck. |
| 12 | **ABS hydraulic unit / control module check**<br>1) Measure resistance at following connector terminals.<br>• Between "E03-8" terminal and "E03-6" terminal of ABS hydraulic unit / control module connector.<br>• Between "E03-10" terminal and "E03-12" terminal of ABS hydraulic unit / control module connector.<br>*Is measured resistance below 1 Ω?* | Go to Step 13. | Substitute a known-good ABS hydraulic unit / control module and recheck. |
| 13 | **CAN communication line circuit insulation check**<br>1) Disconnect connector from ABS hydraulic unit / control module assembly with ignition switch turned OFF.<br>2) Measure resistance between "E03-6" and "E03-12" terminals of ABS hydraulic unit / control module connector.<br>*Is resistance infinity?* | Go to Step 14. | Repair insulation of CAN communication line circuit referring to "Precaution for CAN Communication System: in Section 00". |
| 14 | **CAN communication line circuit insulation check**<br>1) Disconnect connectors from ECM with ignition switch turned OFF.<br>2) Measure resistance between "E23-4" and "E23-19" terminals of ECM connector.<br>*Is resistance infinity?* | Go to Step 15. | Repair insulation of CAN communication line circuit referring to "Precaution for CAN Communication System: in Section 00". |

www.cargeek.ir

www.CarGeek.ir

| Step | Action | Yes | No |
|---|---|---|---|
| 15 | **CAN communication line circuit continuity check**<br>1) Measure resistance at following connector terminals.<br>• Between “E23-4” terminal of ECM connector and “E03-10” terminal of ABS hydraulic unit / control module connector<br>• Between “E23-19” terminal of ECM connector and “E03-8” terminal of ABS hydraulic unit / control module connector<br>• Between “E03-12” terminal of ABS hydraulic unit / control module connector and each “G31-1” terminal of BCM connector, “E91-22” terminal of 4WD control module connector (for J20 engine), “E92-17” terminal of TCM connector (for A/T model), “G44-19” terminal of keyless start control module connector (if equipped), “G28-10” terminal of combination meter connector<br>• Between “E03-6” terminal of ABS hydraulic unit / control module connector and each “G31-3” terminal of BCM connector, “E91-23” terminal of 4WD control module connector (for J20 engine), “E92-7” terminal of TCM connector (for A/T model), “G44-18” terminal of keyless start control module connector (if equipped), “G28-8” terminal of combination meter connector<br>• Between “G31-2” terminal of BCM connector and “RED” wire terminal of DLC<br>• Between “G31-4” terminal of BCM connector and “WHT” wire terminal of DLC<br>*Is each resistance below 1 Ω?* | Go to Step 16. | Repair open or high resistance of CAN communication line circuit referring to “Precaution for CAN Communication System: in Section 00”. |
| 16 | **CAN communication line circuit ground short check**<br>1) Measure resistance at following connector terminals.<br>• Between “E23-4” terminal of ECM connector and vehicle body ground<br>• Between “E23-19” terminal of ECM connector and vehicle body ground<br>• Between “E03-12” terminal of ABS hydraulic unit / control module connector and vehicle body ground<br>• Between “E03-6” terminal of ABS hydraulic unit / control module connector and vehicle body ground<br>• Between “G31-2” terminal of BCM connector and vehicle body ground<br>• Between “G31-4” terminal of BCM connector and vehicle body ground<br>*Is each resistance infinity?* | Go to Step 17. | Repair short to ground of CAN communication line circuit referring to “Precaution for CAN Communication System: in Section 00”. |

www.cargeek.ir

www.CarGeek.ir


| Step | Action | Yes | No |
|---|---|---|---|
| 17 | **Check for short circuit of CAN communication line to power circuit**<br>1) Measure voltage at following connector terminals with ignition switch turned ON.<br>• Between “E23-4” terminal of ECM connector and vehicle body ground<br>• Between “E23-19” terminal of ECM connector and vehicle body ground<br>• Between “E03-12” terminal of ABS hydraulic unit / control module connector and vehicle body ground<br>• Between “E03-6” terminal of ABS hydraulic unit / control module connector and vehicle body ground<br>• Between “G31-2” terminal of BCM connector and vehicle body ground<br>• Between “G31-4” terminal of BCM connector and vehicle body ground<br>*Is each voltage 0 – 1 V?* | Substitute a known-good ABS hydraulic unit / control module and recheck. If DTC is still detected, substitute a known-good ECM and recheck. | Repair short to power supply of CAN communication line circuit referring to “Precaution for CAN Communication System: in Section 00”. |

## DTC P1676: CAN Communication (Reception Error for TCM (for A/T model))

S5JB0A1104060

### Wiring Diagram

Refer to “DTC P1674: CAN Communication (Bus Off Error): ”.

### DTC Detecting Condition and Trouble Area

| DTC detecting condition | Trouble area |
|---|---|
| Reception error of communication data for TCM is detected for longer than specified time continuously.<br>(1 driving detection logic) | • ECM<br>• TCM (for A/T model)<br>• CAN communication line circuit |

### DTC Confirmation Procedure

1) Connect scan tool to DLC with ignition switch turned OFF.
2) Turn ON ignition switch and clear DTC by using scan tool.
3) Start engine and run it for 1 min. or more.
4) Check DTC.

www.cargeek.ir
www.cargeek.ir

www.CarGeek.ir

## DTC Troubleshooting

**NOTE**

**Before this trouble shooting is performed, read the precautions for DTC troubleshooting referring to "Precautions For DTC Troubleshooting: ".**

| Step | Action | Yes | No |
|---|---|---|---|
| 1 | *Was "Engine and Emission Control System Check" performed?* | Go to Step 2. | Go to "Engine and Emission Control System Check: ". |
| 2 | **DTC check**<br>1) Connect scan tool to DLC with ignition switch turned OFF.<br>2) Check ECM, TCM (for A/T model), ABS hydraulic unit / control module assembly, 4WD control module (for J20 engine), keyless start control module (if equipped) and BCM for DTC.<br>*Is there any DTC(s) other than CAN communication DTC(s) at each control module (other than DTC P1618, P1674, P1676, P1678, P1685 in ECM, DTC P1774, P1777, P1778 in TCM (for A/T model), DTC U1073, U1100, U1101, U1121 in BCM, ABS hydraulic unit / control module assembly and 4WD control module (for J20 engine), and DTC No.31 / 33 in keyless start control module (if equipped))?* | Go to applicable DTC diag. flow. | Go to Step 3. |
| 3 | **Check CAN communication error for ECM**<br>1) Check ECM for DTC.<br>*Is there DTC P1674?* | Go to "DTC P1674: CAN Communication (Bus Off Error): ". | Go to Step 4. |
| 4 | **ECM, ABS hydraulic unit / control module and TCM (for A/T model) connector check**<br>1) Check for proper connection at each ECM, ABS hydraulic unit / control module and TCM (for A/T model) connector terminals with ignition switch turned OFF.<br>2) If connections are OK, recheck ECM for DTC with engine running.<br>*Is there DTC P1676?* | Go to Step 5. | Intermittent trouble. Check for intermittent referring to "Intermittent and Poor Connection Inspection: in Section 00". |
| 5 | **ECM power and ground circuit check**<br>1) Check ECM power and ground circuits referring to "ECM Power and Ground Circuit Check: ".<br>*Are they in good condition?* | Go to Step 6. | Repair ECM power and/ or ground circuits. |
| 6 | **DTC check in TCM (for A/T model)**<br>1) Check DTC P1774 in TCM (for A/T model).<br>*Is it indicated?* | Go to "DTC P1774: CAN Communication Bus Off: in Section 5A". | Go to Step 7. |
| 7 | **DTC check in ECM**<br>1) Disconnect connector from BCM with ignition switch turned OFF.<br>2) Check ECM for DTC(s).<br>*Is there DTC P1676?* | Go to Step 8. | "G31-1" or "G31-3" circuit wire between BCM and CAN circuit junction connector is open or high resistance. If wires are OK, substitute a known-good BCM and recheck. |

www.cargeek.ir

www.CarGeek.ir


| Step | Action | Yes | No |
|---|---|---|---|
| 8 | **DTC check in ECM**<br>1) Disconnect connectors from TCM (for A/T model) with ignition switch turned OFF.<br>2) Check ECM for DTC.<br>*Is there DTC P1676?* | Go to Step 9. | "E92-17" or "E92-7" circuit wire between TCM and CAN circuit junction connector is open or high resistance. If wires are OK, substitute a known-good TCM (for A/T model) and recheck. |
| 9 | **DTC check in ECM**<br>1) Disconnect connector from keyless start control module (if equipped) with ignition switch turned OFF.<br>2) Check ECM for DTC.<br>*Is there DTC P1676?* | Go to Step 10. | "G44-19" or "G44-18" circuit wire between keyless start control module and CAN circuit junction connector is open or high resistance. If wires are OK, substitute a known-good keyless start control module and recheck. |
| 10 | **DTC check in ECM**<br>1) Disconnect connector from combination meter with ignition switch turned OFF.<br>2) Check ECM for DTC.<br>*Is there DTC P1676?* | Go to Step 11. | "G28-10" or "G28-8" circuit wire between combination meter and CAN circuit junction connector is open or high resistance. If wires are OK, substitute a known-good combination meter or keyless start control module (if equipped) and recheck. |
| 11 | **DTC check in ECM**<br>1) Disconnect connector from 4WD control module (for J20 engine) with ignition switch turned OFF.<br>2) Check ECM for DTC.<br>*Is there DTC P1676?* | Go to Step 12. | "E91-22" or "E91-23" circuit wire between 4WD control module and CAN circuit junction connector is open or high resistance. If wires are OK, substitute a known-good 4WD control module and recheck. |
| 12 | **ABS hydraulic unit / control module check**<br>1) Measure resistance at following connector terminals.<br>• Between "E03-8" terminal and "E03-6" terminal of ABS hydraulic unit / control module connector.<br>• Between "E03-10" terminal and "E03-12" terminal of ABS hydraulic unit / control module connector.<br>*Is measured resistance below 1 Ω?* | Go to Step 13. | Substitute a known-good ABS hydraulic unit / control module and recheck. |

www.cargeek.ir
www.cargeek.ir

www.CarGeek.ir

| Step | Action | Yes | No |
|---|---|---|---|
| 13 | **CAN communication line circuit continuity check**<br>1) Disconnect connectors from all control modules communicating by CAN with ignition switch turned OFF.<br>2) Measure resistance at following connector terminals.<br>• Between “E23-4” terminal of ECM connector and “E03-10” terminal of ABS hydraulic unit / control module connector<br>• Between “E23-19” terminal of ECM connector and “E03-8” terminal of ABS hydraulic unit / control module connector<br>• Between “E03-12” terminal of ABS hydraulic unit / control module connector and “E92-17” terminal of TCM connector<br>• Between “E03-6” terminal of ABS hydraulic unit / control module connector and “E92-7” terminal of TCM connector<br>*Is each resistance below 1 Ω?* | Go to Step 14. | Repair open or high resistance of CAN communication line circuit referring to “Precaution for CAN Communication System: in Section 00”. |
| 14 | **CAN communication line circuit insulation check**<br>1) Measure resistance at following connector terminals.<br>• Between “E23-4” and “E23-19” terminal of ECM connector<br>• Between “E92-17” and “E92-7” terminal of TCM connector<br>*Is reach resistance infinity?* | Go to Step 15. | Repair insulation of CAN communication line circuit referring to “Precaution for CAN Communication System: in Section 00”. |
| 15 | **CAN communication line circuit ground short check**<br>1) Measure resistance at following connector terminals.<br>• Between “E23-4” terminal of ECM connector and vehicle body ground<br>• Between “E23-19” terminal of ECM connector and vehicle body ground<br>• Between “E92-7” terminal of TCM connector and vehicle body ground<br>• Between “E92-17” terminal of TCM connector and vehicle body ground<br>*Is each resistance infinity?* | Go to Step 16. | Repair short to ground of CAN communication line circuit referring to “Precaution for CAN Communication System: in Section 00”. |
| 16 | **Check for short circuit of CAN communication line to power circuit**<br>1) Measure voltage at following connector terminals with ignition switch turned ON.<br>• Between “E23-4” terminal of ECM connector and vehicle body ground<br>• Between “E23-19” terminal of ECM connector and vehicle body ground<br>• Between “E92-7” terminal of TCM connector and vehicle body ground<br>• Between “E92-17” terminal of TCM connector and vehicle body ground<br>*Is each voltage 0 – 1 V?* | Go to Step 17. | Repair short to power supply of CAN communication line circuit referring to “Precaution for CAN Communication System: in Section 00”. |

www.cargeek.ir

www.CarGeek.ir


| Step | Action | Yes | No |
|---|---|---|---|
| 17 | **DTC check in BCM**<br>1) Connect connectors to all control modules communicating by CAN with ignition switch turned OFF.<br>2) Check DTC U1101 in BCM.<br>*Is it indicated?* | Check TCM power and ground circuit. If circuit is OK, substitute a known-good TCM and recheck. | Substitute a known-good ECM and recheck. |

## DTC P1678: CAN Communication (Reception Error for BCM)

S5JB0A1104061

### Wiring Diagram

Refer to “DTC P1674: CAN Communication (Bus Off Error): ”.

### DTC Detecting Condition and Trouble Area

| DTC detecting condition | Trouble area |
|---|---|
| Reception error of communication data for BCM is detected for longer than specified time continuously.<br>(1 driving detection logic but MIL does not light up) | • ECM<br>• BCM<br>• CAN communication line circuit |

### DTC Confirmation Procedure

1) Connect scan tool to DLC with ignition switch turned OFF.
2) Turn ON ignition switch and clear DTC by using scan tool.
3) Start engine and run it for 1 min. or more.
4) Check DTC.

### DTC Troubleshooting

**NOTE**

**Before this trouble shooting is performed, read the precautions for DTC troubleshooting referring to “Precautions For DTC Troubleshooting: ”.**

| Step | Action | Yes | No |
|---|---|---|---|
| 1 | *Was “Engine and Emission Control System Check” performed?* | Go to Step 2. | Go to “Engine and Emission Control System Check: ”. |
| 2 | **DTC check**<br>1) Connect scan tool to DLC with ignition switch turned OFF.<br>2) Check ECM, TCM (for A/T model), ABS hydraulic unit / control module assembly, 4WD control module (for J20 engine), keyless start control module (if equipped) and BCM for DTC.<br>*Is there any DTC(s) other than CAN communication DTC(s) at each control module (other than DTC P1618, P1674, P1676, P1678, P1685 in ECM, DTC P1774, P1777, P1778 in TCM (for A/T model), DTC U1073, U1100, U1101, U1121 in BCM, ABS hydraulic unit / control module assembly and 4WD control module (for J20 engine), and DTC No.31 / 33 in keyless start control module (if equipped))?* | Go to applicable DTC diag. flow. | Go to Step 3. |
| 3 | **CAN communication error check for ECM**<br>1) Check ECM for DTC.<br>*Is there DTC P1674?* | Go to “DTC P1674: CAN Communication (Bus Off Error): ”. | Go to Step 4. |

www.cargeek.ir

www.CarGeek.ir

| Step | Action | Yes | No |
|---|---|---|---|
| 4 | **ECM, ABS hydraulic unit / control module and BCM connector check**<br>1) Check for proper connection at each ECM, ABS hydraulic unit / control module and BCM connector terminals with ignition switch turned OFF.<br>2) If connections are OK, recheck ECM for DTC with engine running.<br>*Is there DTC P1678?* | Go to Step 5. | Intermittent trouble. Check for intermittent referring to “Intermittent and Poor Connection Inspection: in Section 00”. |
| 5 | **ECM power and ground circuit check**<br>1) Check ECM power and ground circuits referring to “ECM Power and Ground Circuit Check: ”.<br>*Are they in good condition?* | Go to Step 6. | Repair ECM power and/ or ground circuits. |
| 6 | **DTC check in BCM**<br>1) Check DTC U1073 in BCM.<br>*Is it indicated?* | Go to “DTC U1073 (No. 1073): Control Module Communication Bus Off: in Section 10B”. | Go to Step 7. |
| 7 | **DTC check in ECM**<br>1) Disconnect connector from BCM with ignition switch turned OFF.<br>2) Check ECM for DTC(s).<br>*Is there DTC P1678?* | Go to Step 8. | “G31-1” or “G31-3” circuit wire between BCM and CAN circuit junction connector is open or high resistance. If wires are OK, substitute a known-good BCM and recheck. |
| 8 | **DTC check in ECM**<br>1) Disconnect connectors from TCM (for A/T model) and connect connector to ABS hydraulic unit / control module with ignition switch turned OFF.<br>2) Check ECM for DTC.<br>*Is there DTC P1678?* | Go to Step 9. | “E92-17” or “E92-7” circuit wire between TCM and CAN circuit junction connector is open or high resistance. If wires are OK, substitute a known-good TCM (for A/T model) and recheck. |
| 9 | **DTC check in ECM**<br>1) Disconnect connector from keyless start control module (if equipped) with ignition switch turned OFF.<br>2) Check ECM for DTC.<br>*Is there DTC P1678?* | Go to Step 10. | “G44-19” or “G44-18” circuit wire between keyless start control module and CAN circuit junction connector is open or high resistance. If wires are OK, substitute a known-good keyless start control module and recheck. |
| 10 | **DTC check in ECM**<br>1) Disconnect connector from combination meter with ignition switch turned OFF.<br>2) Check ECM for DTC.<br>*Is there DTC P1678?* | Go to Step 11. | “G28-10” or “G28-8” circuit wire between combination meter and CAN circuit junction connector is open or high resistance. If wires are OK, substitute a known-good combination meter or keyless start control module (if equipped) and recheck. |

www.cargeek.ir

www.CarGeek.ir


| Step | Action | Yes | No |
|---|---|---|---|
| 11 | **DTC check in ECM**<br>1) Disconnect connector from 4WD control module (for J20 engine) with ignition switch turned OFF.<br>2) Check ECM for DTC.<br>*Is there DTC P1678?* | Go to Step 12. | "E91-22" or "E91-23" circuit wire between 4WD control module and CAN circuit junction connector is open or high resistance. If wires are OK, substitute a known-good 4WD control module and recheck. |
| 12 | **ABS hydraulic unit / control module check**<br>1) Measure resistance at following connector terminals.<br>• Between "E03-8" terminal and "E03-6" terminal of ABS hydraulic unit / control module connector.<br>• Between "E03-10" terminal and "E03-12" terminal of ABS hydraulic unit / control module connector.<br>*Is measured resistance below 1 Ω?* | Go to Step 13. | Substitute a known-good ABS hydraulic unit / control module and recheck. |
| 13 | **CAN communication line circuit continuity check**<br>1) Disconnect connectors from all control modules communicating by CAN with ignition switch turned OFF.<br>2) Measure resistance at following connector terminals.<br>• Between "E23-4" terminal of ECM connector and "E03-10" terminal of ABS hydraulic unit / control module connector<br>• Between "E23-19" terminal of ECM connector and "E03-8" terminal of ABS hydraulic unit / control module connector<br>• Between "E03-12" terminal of ABS hydraulic unit / control module connector and "G31-1" terminal of BCM connector<br>• Between "E03-6" terminal of ABS hydraulic unit / control module connector and "G31-3" terminal of BCM connector<br>• Between "G31-2" terminal of BCM connector and "RED" wire terminal of DLC<br>• Between "G31-4" terminal of BCM connector and "WHT" wire terminal of DLC<br>*Is each resistance below 1 Ω?* | Go to Step 14. | Repair open or high resistance of CAN communication line circuit referring to "Precaution for CAN Communication System: in Section 00". |
| 14 | **CAN communication line circuit insulation check**<br>1) Measure resistance at following connector terminals.<br>• Between "E23-4" and "E23-19" terminal of ECM connector<br>• Between "G31-1" and "G31-3" terminal of BCM connector<br>• Between "G31-2" and "G31-4" terminal of BCM connector<br>*Is each resistance infinity?* | Go to Step 15. | Repair insulation of CAN communication line circuit referring to "Precaution for CAN Communication System: in Section 00". |

www.cargeek.ir

www.CarGeek.ir

| Step | Action | Yes | No |
|---|---|---|---|
| 15 | **CAN communication line circuit ground short check**<br>1) Measure resistance at following connector terminals.<br>• Between “E23-4” terminal of ECM connector and vehicle body ground<br>• Between “E23-19” terminal of ECM connector and vehicle body ground<br>• Between “G31-1” terminal of BCM connector and vehicle body ground<br>• Between “G31-2” terminal of BCM connector and vehicle body ground<br>• Between “G31-3” terminal of BCM connector and vehicle body ground<br>• Between “G31-4” terminal of BCM connector and vehicle body ground<br>*Is each resistance infinity?* | Go to Step 16. | Repair short to ground of CAN communication line circuit referring to “Precaution for CAN Communication System: in Section 00”. |
| 16 | **Check for short circuit of CAN communication line to power circuit**<br>1) Measure voltage at following connector terminals with ignition switch turned ON.<br>• Between “E23-4” terminal of ECM connector and vehicle body ground<br>• Between “E23-19” terminal of ECM connector and vehicle body ground<br>• Between “G31-1” terminal of BCM connector and vehicle body ground<br>• Between “G31-2” terminal of BCM connector and vehicle body ground<br>• Between “G31-3” terminal of BCM connector and vehicle body ground<br>• Between “G31-4” terminal of BCM connector and vehicle body ground<br>*Is each voltage 0 – 1 V?* | Go to Step 17. | Repair short to power supply of CAN communication line circuit referring to “Precaution for CAN Communication System: in Section 00”. |
| 17 | **Vehicle spec check**<br>*Is vehicle equipped with A/T?* | Go to Step 18. | Go to Step 19. |
| 18 | **DTC check in TCM (for A/T model)**<br>1) Connect connectors to all control modules with ignition switch turned OFF.<br>2) Check DTC P1778 in TCM (for A/T model).<br>*Is it indicated?* | Go to Step 19. | Substitute a known-good ECM and recheck. |
| 19 | **Combination meter operation check**<br>1) Check combination meter operation for seat belt warning lamp by fastening and unfastening driver side seat belt with ignition switch turned ON.<br>*Is it check result satisfactory?* | Substitute a known-good ECM and recheck. | Substitute a known-good BCM (included in junction block assembly) and recheck. |

www.cargeek.ir

www.CarGeek.ir


## DTC P1685: CAN Communication (Reception Error for ABS Control Module)

S5JB0A1104094

### Wiring Diagram

Refer to “DTC P1674: CAN Communication (Bus Off Error): ”.

### DTC Detecting Condition and Trouble Area

| DTC detecting condition | Trouble area |
|---|---|
| Reception error of communication data for ABS hydraulic unit / control module assembly is detected for longer than specified time continuously.<br>(1 driving detection logic) | • ECM<br>• ABS hydraulic unit / control module assembly<br>• CAN communication line circuit |

### DTC Confirmation Procedure

1) Connect scan tool to DLC with ignition switch turned OFF.
2) Turn ON ignition switch and clear DTC by using scan tool.
3) Start engine and run it for 1 min. or more.
4) Check DTC.

### DTC Troubleshooting

**NOTE**

**Before this trouble shooting is performed, read the precautions for DTC troubleshooting referring to “Precautions For DTC Troubleshooting: ”.**

| Step | Action | Yes | No |
|---|---|---|---|
| 1 | *Was “Engine and Emission Control System Check” performed?* | Go to Step 2. | Go to “Engine and Emission Control System Check: ”. |
| 2 | **DTC check**<br>1) Connect scan tool to DLC with ignition switch turned OFF.<br>2) Check ECM, TCM (for A/T model), ABS hydraulic unit / control module assembly, 4WD control module (for J20 engine), keyless start control module (if equipped) and BCM for DTC.<br>*Is there any DTC(s) other than CAN communication DTC(s) at each control module (other than DTC P1618, P1674, P1676, P1678, P1685 in ECM, DTC P1774, P1777, P1778 in TCM (for A/T model), DTC U1073, U1100, U1101, U1121 in BCM, ABS hydraulic unit / control module assembly and 4WD control module (for J20 engine), and DTC No.31 / 33 in keyless start control module (if equipped))?* | Go to applicable DTC diag. flow. | Go to Step 3. |
| 3 | **Check CAN communication error for ECM**<br>1) Check ECM for DTC.<br>*Is there DTC P1674?* | Go to “DTC P1674: CAN Communication (Bus Off Error): ”. | Go to Step 4. |
| 4 | **ECM and ABS hydraulic unit / control module connector check**<br>1) Check for proper connection at each ECM and ABS hydraulic unit / control module connector terminals with ignition switch turned OFF.<br>2) If connections are OK, recheck ECM for DTC with engine running.<br>*Is there DTC P1685?* | Go to Step 5. | Intermittent trouble. Check for intermittent referring to “Intermittent and Poor Connection Inspection: in Section 00”. |

www.cargeek.ir

www.CarGeek.ir

| Step | Action | Yes | No |
|---|---|---|---|
| 5 | **ECM power and ground circuit check**<br>1) Check ECM power and ground circuits referring to “ECM Power and Ground Circuit Check: ”.<br>*Are they in good condition?* | Go to Step 6. | Repair ECM power and/ or ground circuits. |
| 6 | **DTC check in ABS hydraulic unit / control module assembly**<br>1) Check DTC U1073 in ABS hydraulic unit / control module assembly.<br>*Is it indicated?* | Go to “DTC U1073: Control Module Communication Bus Off: in Section 4E”. | Go to Step 7. |
| 7 | **DTC check in ECM**<br>1) Disconnect connector from BCM with ignition switch turned OFF.<br>2) Check ECM for DTC(s).<br>*Is there DTC P1685?* | Go to Step 8. | “G31-1” or “G31-3” circuit wire between BCM and CAN circuit junction connector is open or high resistance. If wires are OK, substitute a known-good BCM and recheck. |
| 8 | **DTC check in ECM**<br>1) Disconnect connectors from TCM (for A/T model) with ignition switch turned OFF.<br>2) Check ECM for DTC.<br>*Is there DTC P1685?* | Go to Step 9. | “E92-17” or “E92-7” circuit wire between TCM and CAN circuit junction connector is open or high resistance. If wires are OK, substitute a known-good TCM (for A/T model) and recheck. |
| 9 | **DTC check in ECM**<br>1) Disconnect connector from keyless start control module (if equipped) with ignition switch turned OFF.<br>2) Check ECM for DTC.<br>*Is there DTC P1685?* | Go to Step 10. | “G44-19” or “G44-18” circuit wire between keyless start control module and CAN circuit junction connector is open or high resistance. If wires are OK, substitute a known-good keyless start control module and recheck. |
| 10 | **DTC check in ECM**<br>1) Disconnect connector from combination meter with ignition switch turned OFF.<br>2) Check ECM for DTC.<br>*Is there DTC P1685?* | Go to Step 11. | “G28-10” or “G28-8” circuit wire between combination meter and CAN circuit junction connector is open or high resistance. If wires are OK, substitute a known-good combination meter or keyless start control module (if equipped) and recheck. |

www.cargeek.ir

www.CarGeek.ir


| Step | Action | Yes | No |
|---|---|---|---|
| 11 | **DTC check in ECM**<br>1) Disconnect connector from 4WD control module (for J20 engine) with ignition switch turned OFF.<br>2) Check ECM for DTC.<br>*Is there DTC P1685?* | Go to Step 12. | "E91-22" or "E91-23" circuit wire between 4WD control module and CAN circuit junction connector is open or high resistance. If wires are OK, substitute a known-good 4WD control module and recheck. |
| 12 | **CAN communication line circuit continuity check**<br>1) Disconnect connectors from all control modules communicating by CAN with ignition switch turned OFF.<br>2) Measure resistance at following connector terminals.<br>• Between "E23-4" terminal of ECM connector and "E03-10" terminal of ABS hydraulic unit / control module connector<br>• Between "E23-19" terminal of ECM connector and "E03-8" terminal of ABS hydraulic unit / control module connector<br>*Is each resistance below 1 Ω?* | Go to Step 13. | Repair open or high resistance of CAN communication line circuit referring to "Precaution for CAN Communication System: in Section 00". |
| 13 | **CAN communication line circuit insulation check**<br>1) Measure resistance between "E23-4" and "E23-19" terminals of ECM connector.<br>*Is resistance infinity?* | Go to Step 14. | Repair insulation of CAN communication line circuit referring to "Precaution for CAN Communication System: in Section 00". |
| 14 | **CAN communication line circuit ground short check**<br>1) Measure resistance at following connector terminals.<br>• Between "E23-4" terminal of ECM connector and vehicle body ground<br>• Between "E23-19" terminal of ECM connector and vehicle body ground<br>*Is each resistance infinity?* | Go to Step 15. | Repair short to ground of CAN communication line circuit referring to "Precaution for CAN Communication System: in Section 00". |
| 15 | **Check for short circuit of CAN communication line to power circuit**<br>1) Measure voltage at following connector terminals with ignition switch turned ON.<br>• Between "E23-4" terminal of ECM connector and vehicle body ground<br>• Between "E23-19" terminal of ECM connector and vehicle body ground<br>*Is each voltage 0 – 1 V?* | Go to Step 16. | Repair short to power supply of CAN communication line circuit referring to "Precaution for CAN Communication System: in Section 00". |
| 16 | **ECM circuit check**<br>1) Connect connector to ABS hydraulic unit / control module with ignition switch turned OFF.<br>2) Measure resistance at following connector terminals.<br>• Between "E03-8" and "E03-6" terminals of ABS hydraulic unit / control module connector<br>• Between "E03-10" and "E03-12" terminals of ABS hydraulic unit / control module connector<br>*Is resistance below 1 Ω?* | Go to Step 17. | Substitute a known-good ABS hydraulic unit / control module assembly and recheck. |

www.cargeek.ir

www.CarGeek.ir

| Step | Action | Yes | No |
|---|---|---|---|
| 17 | **ABS warning lamp check**<br>1) Connect connectors to all control modules communicating by CAN.<br>2) Turn ignition switch ON.<br>*Is ABS warning lamp light up?* | Substitute a known-good ABS hydraulic unit / control module assembly and recheck. | Substitute a known-good ECM and recheck. |

## DTC P2101: Throttle Actuator Control Motor Circuit Range / Performance

S5JB0A1104077

### Wiring Diagram

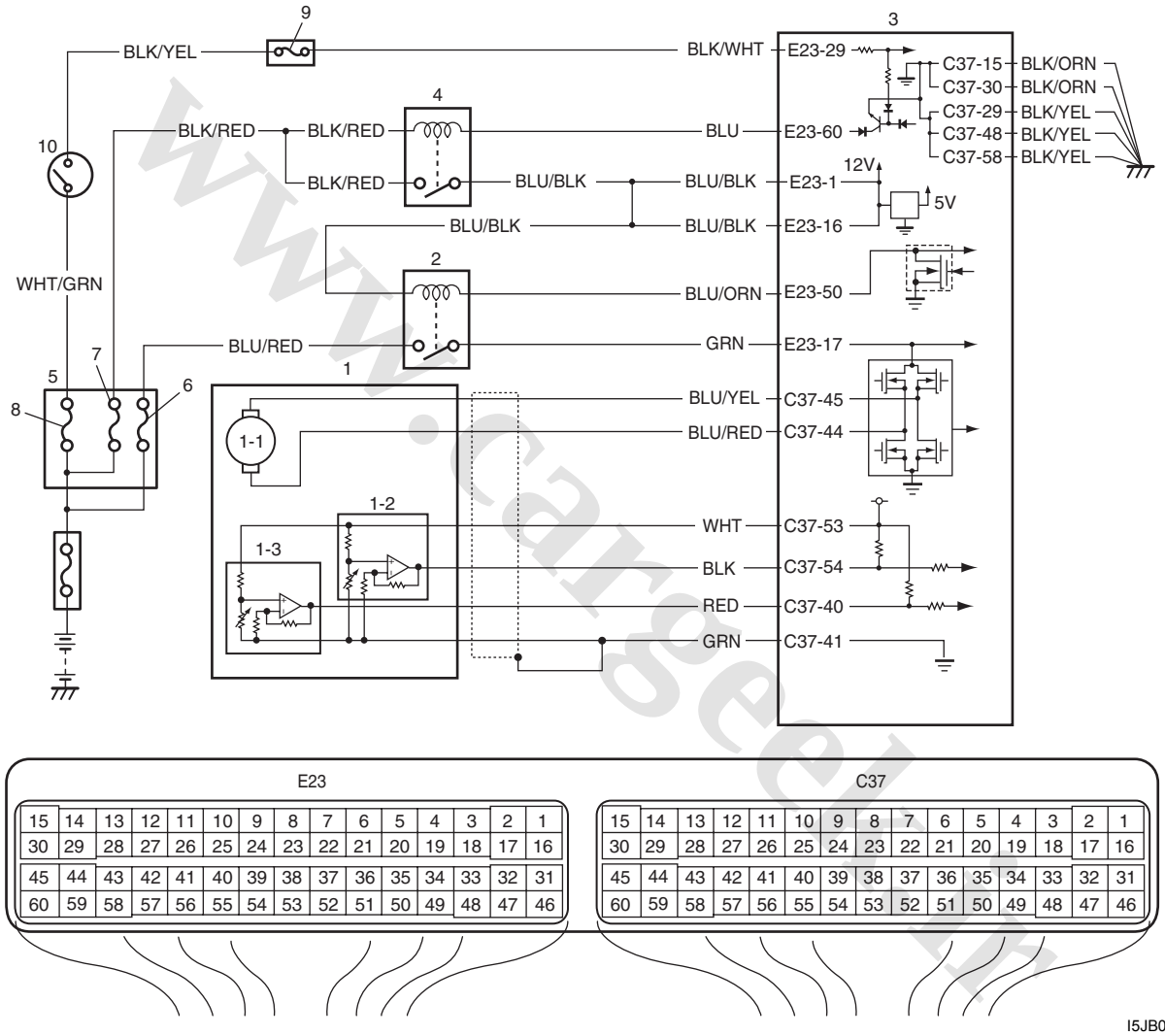


I5JB0A110069-01

| | | |
|---|---|---|
| 1. Electric throttle body assembly | 3. ECM | 8. “IGN” fuse |
| 1-1. Throttle actuator | 4. Main relay | 9. “IG COIL” fuse |
| 1-2. Throttle position sensor (main) | 5. Fuse box No.2 | 10. Ignition switch |
| 1-3. Throttle position sensor (sub) | 6. “THR MOT” fuse | |
| 2. Throttle actuator control relay | 7. “FI” fuse | |

www.cargeek.ir

www.CarGeek.ir


**DTC Detecting Condition and Trouble Area**

| DTC detecting condition | Trouble area |
|---|---|
| Monitor signal of throttle actuator output (duty output) is inconsistent with throttle actuator control command.<br>(1 driving detection logic) | • Throttle actuator circuit<br>• Electric throttle body assembly<br>• ECM |

**DTC Confirmation Procedure**

1) With ignition switch turned OFF, connect scan tool.
2) Turn ON ignition switch and clear DTC using scan tool.
3) Keep the accelerator pedal at idle position for 2 seconds.
4) Keep the accelerator pedal at fully depressed position for 2 seconds.
5) Repeat Step 3) and 4) for 3 times.
6) Check DTC.

**DTC Troubleshooting**

**NOTE**

**Before this trouble shooting is performed, read the precautions for DTC troubleshooting referring to "Precautions For DTC Troubleshooting: ".**

| Step | Action | Yes | No |
|---|---|---|---|
| 1 | *Was "Engine and Emission Control System Check" performed?* | Go to Step 2. | Go to "Engine and Emission Control System Check: ". |
| 2 | **Throttle actuator circuit check**<br>1) Disconnect connectors from electric throttle body assembly and ECM with ignition switch turned OFF.<br>2) Check for proper connection of electric throttle body assembly and ECM connectors at "BLU/YEL" wire, "BLU/RED" wire, "C37-45" and "C37-44" terminals.<br>**For J20 engine**<br> 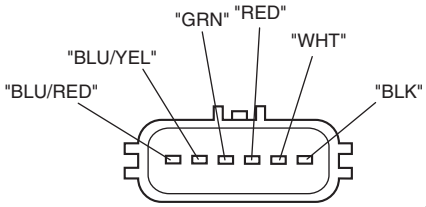 <br><br>I5JB0A110042-01<br>**For M16 engine**<br> 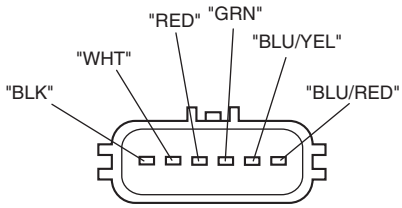 <br><br>I5JB0A110043-01<br>3) Turn ON ignition switch.<br>4) Measure voltage between "BLU/YEL" wire terminal of electric throttle body assembly connector and engine ground, between "BLU/RED" wire terminal of electric throttle body assembly connector and engine ground.<br>*Is voltage 0 V?* | Go to Step 3. | "BLU/YEL" wire and/or "BLU/RED" wire is shorted to power circuit. |

www.cargeek.ir

www.CarGeek.ir

| Step | Action | Yes | No |
|---|---|---|---|
| 3 | **Throttle actuator circuit check**<br>1) Turn OFF ignition switch.<br>2) Measure resistance between “BLU/YEL” wire terminal of electric throttle body assembly connector and engine ground, between “BLU/RED” wire terminal of electric throttle body assembly connector and engine ground.<br>*Is resistance infinity?* | Go to Step 4. | “BLU/YEL” wire and/or “BLU/RED” wire is shorted to ground circuit. |
| 4 | **Throttle actuator circuit check**<br>1) Check throttle actuator referring to “Throttle Actuator (Motor) Check” under “Electric Throttle Body Assembly On-Vehicle Inspection:  in Section 1C”.<br>*Is check result satisfactory?* | Substitute a known-good ECM and recheck. | Replace electric throttle body assembly. |

## DTC P2102: Throttle Actuator Control Motor Circuit Low

S5JB0A1104078

### Wiring Diagram

Refer to “DTC P2101: Throttle Actuator Control Motor Circuit Range / Performance: ”.

### DTC Detecting Condition and Trouble Area

| DTC detecting condition | Trouble area |
|---|---|
| Power supply voltage of throttle actuator control circuit is less than 5 V for specified time even if throttle actuator control relay is turned on.<br>(1 driving detection logic) | • Throttle actuator control relay circuit<br>• Throttle actuator control relay<br>• ECM |

### DTC Confirmation Procedure

1) With ignition switch turned OFF, connect scan tool.
2) Turn ON ignition switch and clear DTC using scan tool.
3) Start engine and run it for 1 min. or more.
4) Check DTC.

www.cargeek.ir

www.CarGeek.ir


## DTC Troubleshooting

**NOTE**

**Before this trouble shooting is performed, read the precautions for DTC troubleshooting referring to "Precautions For DTC Troubleshooting: ".**

| Step | Action | Yes | No |
|---|---|---|---|
| 1 | *Was "Engine and Emission Control System Check" performed?* | Go to Step 2. | Go to "Engine and Emission Control System Check: " |
| 2 | **Throttle actuator control relay circuit check**<br>1) Remove ECM from its bracket with ECM connectors connected.<br>2) Check for proper connection of ECM connector at "E23-50" and "E23-17" terminals.<br>3) Turn ON ignition switch.<br>4) Measure voltage between "E23-17" terminal of ECM connector and engine ground.<br>*Is voltage 10 – 14 V?* | Intermittent trouble. Check for intermittent referring to "Intermittent and Poor Connection Inspection: in Section 00". | Go to Step 3. |
| 3 | *Is "THR MOT" fuse in good condition?* | Go to Step 4 | Replace fuse and check for short in circuits connected to this fuse. |
| 4 | **Throttle actuator control relay circuit check**<br>1) Remove throttle actuator control relay from relay box with ignition switch turned OFF.<br>2) Check for proper connection to throttle actuator control relay at "BLU/BLK", "BLU/RED", "BLU/ORN" and "GRN" wire terminals.<br>3) Measure voltage between engine ground and each "BLU/BLK", "BLU/RED" wire terminal with ignition switch turned ON.<br>*Is each voltage 10 – 14 V?* | Go to Step 5 | "BLU/BLK" wire and/or "BLU/RED" wire is open or high resistance. |
| 5 | **Throttle actuator control relay circuit check**<br>1) Disconnect connectors from ECM with ignition switch turned OFF.<br>2) Measure resistance at following connector terminals.<br>• Between "BLU/ORN" wire terminal of throttle actuator control relay connector and "E23-50" terminal of ECM connector<br>• Between "GRN" wire terminal of throttle actuator control relay connector and "E23-17" terminal of ECM connector<br>*Is each resistance below 3 Ω?* | Go to Step 6. | "BLU/ORN" wire and/or "GRN" wire is open or high resistance. |
| 6 | **Throttle actuator control relay check**<br>1) Check throttle actuator control relay referring to "Control Relay Inspection: in Section 1C".<br>*Is it in good condition?* | Substitute a known-good ECM and recheck. | Replace throttle actuator control relay. |

www.cargeek.ir

www.CarGeek.ir

## DTC P2103: Throttle Actuator Control Motor Circuit High

S5JB0A1104079

### Wiring Diagram

Refer to “DTC P2101: Throttle Actuator Control Motor Circuit Range / Performance: ”.

### DTC Detecting Condition and Trouble Area

| DTC detecting condition | Trouble area |
|---|---|
| Power supply voltage of throttle actuator control circuit is more than 5 V for specified time even if throttle actuator control relay is turned off.<br>(1 driving detection logic) | • Throttle actuator control relay circuit<br>• Throttle actuator control relay<br>• ECM |

### DTC Confirmation Procedure

1) With ignition switch turned OFF, connect scan tool.
2) Turn ON ignition switch and clear DTC using scan tool.
3) Ignition switch turned OFF for 20 sec. or more.
4) Turn ON ignition switch and check DTC.

### DTC Troubleshooting

**NOTE**

**Before this trouble shooting is performed, read the precautions for DTC troubleshooting referring to “Precautions For DTC Troubleshooting: ”.**

| Step | Action | Yes | No |
|---|---|---|---|
| 1 | *Was “Engine and Emission Control System Check” performed?* | Go to Step 2. | Go to “Engine and Emission Control System Check: ”. |
| 2 | **Throttle actuator control relay circuit check**<br>1) Remove throttle actuator control relay from relay box with ignition switch turned OFF.<br>2) Check for proper connection to throttle actuator control relay at “BLU/BLK”, “BLU/RED”, “BLU/ORN” and “GRN” wire terminals.<br>3) Turn ON ignition switch.<br>4) Measure voltage between engine ground and “E23-17” terminal of ECM connector.<br>*Is voltage 0 V?* | Go to Step 3. | “GRN” wire is shorted to other circuit. |
| 3 | **Throttle actuator control relay circuit check**<br>1) Disconnect connectors from ECM with ignition switch turned OFF.<br>2) Measure resistance between engine ground and “E23-50” terminal of ECM connector.<br>*Is resistance infinity?* | Go to Step 4. | “BLU/ORN” wire is shorted to ground circuit. |
| 4 | **Throttle actuator control relay check**<br>1) Check throttle actuator control relay referring to “Control Relay Inspection: in Section 1C”.<br>*Is it in good condition?* | Substitute a known-good ECM and recheck. | Replace throttle actuator control relay. |

www.cargeek.ir

www.CarGeek.ir


## DTC P2111: Throttle Actuator Control System - Stuck Open

S5JB0A1104080

### DTC Detecting Condition and Trouble Area

| DTC detecting condition | Trouble area |
|---|---|
| Throttle valve default opening is greater than 7° from complementary closed position when diagnosing throttle valve at ignition switch turned OFF.<br>(1 driving detection logic) | • Electric throttle body assembly<br>• ECM |

### DTC Confirmation Procedure

1) With ignition switch turned OFF, connect scan tool.
2) Turn ON ignition switch and clear DTC using scan tool.
3) Ignition switch turned OFF for 20 sec. or more.
4) Turn ON ignition switch and check DTC.

### DTC Troubleshooting

**NOTE**

**Before this trouble shooting is performed, read the precautions for DTC troubleshooting referring to "Precautions For DTC Troubleshooting: ".**

| Step | Action | Yes | No |
|---|---|---|---|
| 1 | *Was "Engine and Emission Control System Check" performed?* | Go to Step 2. | Go to "Engine and Emission Control System Check: ". |
| 2 | **Throttle valve visual check**<br>1) Check that there isn't any foreign matter caught between throttle valve and throttle body housing referring to "Throttle Valve Visual Check" under "Electric Throttle Body Assembly On-Vehicle Inspection: in Section 1C".<br>*Is it in good condition?* | Go to Step 3. | Take it out after removing throttle body and clean inside of throttle body thoroughly. |
| 3 | **Throttle valve operation check**<br>1) Check operation of throttle valve referring to "Throttle Valve Operation Check" under "Electric Throttle Body Assembly On-Vehicle Inspection: in Section 1C".<br>*Is check result satisfactory?* | Go to Step 4. | Replace electric throttle body assembly. |
| 4 | **Throttle actuator (motor) check**<br>1) Check operation of throttle actuator referring to "Throttle Actuator (Motor) Check" under "Electric Throttle Body Assembly On-Vehicle Inspection: in Section 1C".<br>*Is check result satisfactory?* | Go to Step 5. | Replace electric throttle body assembly. |
| 5 | **Throttle position sensor performance check**<br>1) Check performance of throttle position sensor referring to "Throttle Position Sensor Performance Check" under "Electric Throttle Body Assembly On-Vehicle Inspection: in Section 1C".<br>*Is check result satisfactory?* | Substitute a known-good ECM and recheck. | Replace electric throttle body assembly. |

www.cargeek.ir

www.CarGeek.ir

## DTC P2119: Throttle Actuator Control Throttle Body Range / Performance

S5JB0A1104081

### Wiring Diagram

Refer to “DTC P2101: Throttle Actuator Control Motor Circuit Range / Performance: ”.

### DTC Detecting Condition and Trouble Area

| DTC detecting condition | Trouble area |
|---|---|
| Difference between the measured (actual) throttle valve opening angle and the target throttle valve opening angle which is calculated based on accelerator pedal opening angle and engine condition is more than specification for specified time continuously.<br>(1 driving detection logic) | • Throttle actuator circuit<br>• Electric throttle body assembly<br>• ECM |

### DTC Confirmation Procedure

1) With ignition switch turned OFF, connect scan tool.
2) Turn ON ignition switch and clear DTC using scan tool.
3) Keep the accelerator pedal at idle position for 2 seconds.
4) Keep the accelerator pedal at fully depressed position for 2 seconds.
5) Repeat Step 3) and 4) for 3 times.
6) Check DTC.

### DTC Troubleshooting

**NOTE**

**Before this trouble shooting is performed, read the precautions for DTC troubleshooting referring to “Precautions For DTC Troubleshooting: ”.**

| Step | Action | Yes | No |
|---|---|---|---|
| 1 | *Was “Engine and Emission Control System Check” performed?* | Go to Step 2. | Go to “Engine and Emission Control System Check: ”. |
| 2 | **Electric throttle body assembly system check**<br>1) Connect scan tool to DLC with ignition switch turned OFF.<br>2) Turn ON ignition switch, check each voltage of “TP Sensor 1 Volt” and “TP Sensor 2 Volt” displayed on scan tool when accelerator pedal is idle position and fully depressed.<br>*Is displayed each TP sensor value as described voltage in “Scan Tool Data: ”?* | Intermittent trouble. Check for intermittent referring to “Intermittent and Poor Connection Inspection: in Section 00”. | Go to Step 3. |

www.cargeek.ir

www.CarGeek.ir


| Step | Action | Yes | No |
|---|---|---|---|
| 3 | **Throttle actuator circuit check**<br>1) Disconnect connector from electric throttle body assembly with ignition switch turned OFF.<br>2) Check for proper connection to electric throttle body assembly at “BLU/YEL” and “BLU/RED” wire terminals.<br>**For J20 engine**<br> 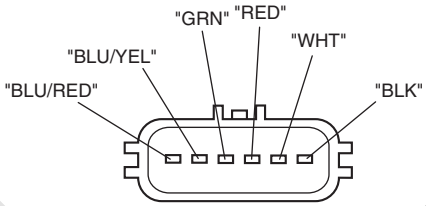 <br><br>I5JB0A110042-01<br>**For M16 engine**<br> 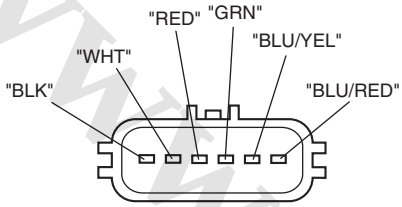 <br><br>I5JB0A110043-01<br>3) Disconnect connectors from ECM.<br>4) Check for proper connection to ECM at “C37-45” and “C37-44” terminals.<br>5) Measure resistance at following connector terminals.<br>• Between “BLU/YEL” wire terminal of electric throttle body assembly connector and “C37-45” terminal of ECM connector<br>• Between “BLU/RED” wire terminal of electric throttle body assembly connector and “C37-44” terminal of ECM connector<br>*Is each resistance below 3 Ω?* | Go to Step 4. | “BLU/YEL” wire and/or “BLU/RED” wire is open or high resistance. |
| 4 | **Electric throttle body assembly check**<br>1) Check electric throttle body assembly referring to “Electric Throttle Body Assembly and Its Circuit Check” under “Electric Throttle Body Assembly On-Vehicle Inspection: in Section 1C”.<br>*Is check result satisfactory?* | Substitute a known-good ECM and recheck. | Replace electric throttle body assembly. |

www.cargeek.ir

www.CarGeek.ir

## DTC P2122: Pedal Position Sensor (Main) Circuit Low Input

S5JB0A1104082

### Wiring Diagram

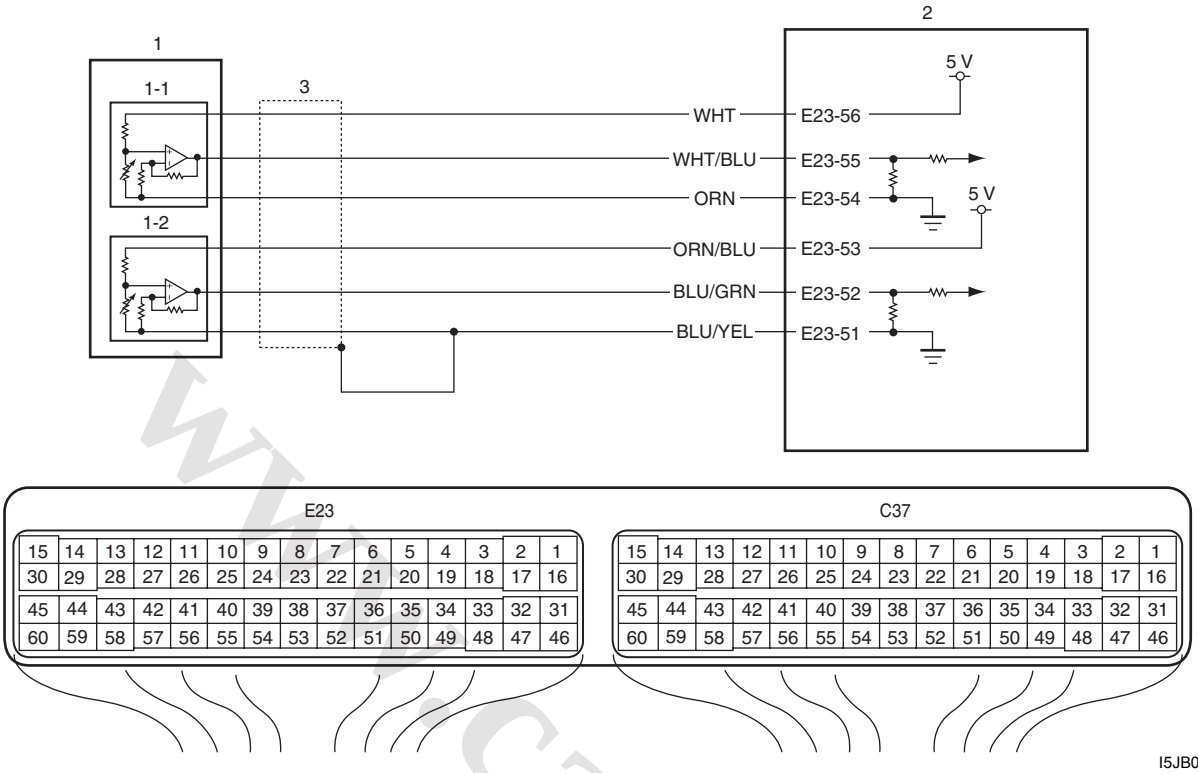


I5JB0A110070-01

| | | |
|---|---|---|
| 1. Accelerator pedal position (APP) sensor assembly | 1-2. Accelerator pedal position (APP) sensor (sub) | 3. Ground of accelerator pedal position (APP) sensor for shield wire |
| 1-1. Accelerator pedal position (APP) sensor (main) | 2. ECM | |

### DTC Detecting Condition and Trouble Area

| DTC detecting condition | Trouble area |
|---|---|
| Output voltage of accelerator pedal position sensor (main) is less than specified value for 0.5 seconds continuously. (1 driving detection logic) | • Accelerator pedal position (APP) sensor (main) circuit<br>• Accelerator pedal position (APP) sensor assembly<br>• ECM<br>• Incorrect mounting of accelerator pedal position (APP) sensor assembly |

### DTC Confirmation Procedure

1) With ignition switch turned OFF, connect scan tool.
2) Turn ON ignition switch and clear DTC using scan tool.
3) Keep the accelerator pedal at idle position for 2 seconds.
4) Keep the accelerator pedal at fully depressed position for 2 seconds.
5) Repeat Step 3) and 4) for 3 times.
6) Check DTC.

www.cargeek.ir

www.CarGeek.ir


## DTC Troubleshooting

**NOTE**

**Before this trouble shooting is performed, read the precautions for DTC troubleshooting referring to "Precautions For DTC Troubleshooting: ".**

| Step | Action | Yes | No |
|---|---|---|---|
| 1 | *Was "Engine and Emission Control System Check" performed?* | Go to Step 2. | Go to "Engine and Emission Control System Check: " |
| 2 | **Accelerator pedal position (APP) sensor assembly mounting check**<br>1) Check that accelerator pedal position (APP) sensor assembly has been mounted to vehicle body properly (no pinched floor carpet, etc).<br>*Is it OK?* | Go to Step 3. | Reinstall accelerator pedal position (APP) sensor assembly properly referring to "Accelerator Pedal Position (APP) Sensor Assembly Removal and Installation: in Section 1C". |
| 3 | **Accelerator pedal position sensor (main) and its circuit check**<br>1) Connect scan tool to DLC with ignition switch turned OFF.<br>2) Turn ON ignition switch, check "APP Sensor 1 Volt" displayed on scan tool.<br>*Is displayed voltage below 0.1 V?* | Go to Step 4. | Intermittent trouble.<br>Check for intermittent referring to "Intermittent and Poor Connection Inspection: in Section 00". |
| 4 | **ECM voltage check**<br>1) Disconnect connector from accelerator pedal position (APP) sensor assembly with ignition switch turned OFF.<br>2) Check for proper connection to accelerator pedal position (APP) sensor assembly at "WHT", "WHT/BLU" and "ORN" wire terminals.<br> 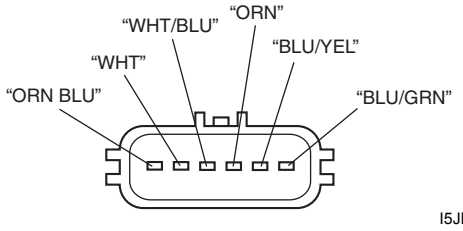 <br><br>3) If OK, measure voltage between "WHT" wire terminal of accelerator pedal position (APP) sensor assembly connector and vehicle body ground with ignition switch turned ON.<br>*Is voltage 4 – 6 V?* | Go to Step 7. | Go to Step 5. |
| 5 | **ECM voltage check**<br>1) Turn OFF ignition switch.<br>2) Remove ECM from its bracket with ECM connectors connected.<br>3) Check for proper connection of ECM connector at "E23-56" terminal.<br>4) If OK, measure voltage between "E23-56" terminal of ECM connector and engine ground with ignition switch turned ON.<br>*Is voltage 4 – 6 V?* | "WHT" wire is open or high resistance circuit. | Go to Step 6. |

www.cargeek.ir

www.CarGeek.ir

| Step | Action | Yes | No |
|---|---|---|---|
| 6 | **Wire harness check**<br>1) Disconnect connectors from ECM with ignition switch turned OFF.<br>2) Measure resistance between “E23-56” terminal of ECM connector and engine ground.<br>*Is resistance infinity?* | Substitute a known-good ECM and recheck. | “WHT” wire is shorted to ground circuit. |
| 7 | **Wire harness check**<br>1) Disconnect connectors from ECM with ignition switch turned OFF.<br>2) Check for proper connection of ECM connector at “E23-55”, “E23-54” and “E23-51” terminals.<br>3) If OK, measure resistance between “WHT/BLU” wire terminal of accelerator pedal position (APP) sensor assembly connector and vehicle body ground.<br>*Is resistance infinity?* | Go to Step 8. | “WHT/BLU” wire is shorted to ground circuit. |
| 8 | **Wire harness check**<br>1) Measure resistance between “E23-55” and each “E23-54”, “E23-51” terminals of ECM connector with ignition switch turned OFF.<br>*Is each resistance infinity?* | Go to Step 9. | “WHT/BLU” wire is shorted to “ORN” wire and/or “BLU/YEL” wire circuit. |
| 9 | **Wire harness check**<br>1) Measure resistance between “WHT/BLU” wire terminal of accelerator pedal position (APP) sensor assembly connector and “E23-55” terminal of ECM connector with ignition switch turned OFF.<br>*Is resistance below 5 Ω?* | Go to Step 10. | “WHT/BLU” wire is open or high resistance circuit. |
| 10 | **Accelerator pedal position (APP) sensor assembly check**<br>1) Check accelerator pedal position sensor (main) referring to “Accelerator Pedal Position (APP) Sensor Assembly Removal and Installation: in Section 1C”.<br>*Is output voltage within specified value?* | Substitute a known-good ECM and recheck. | Replace accelerator pedal position (APP) sensor assembly. |

www.cargeek.ir
www.cargeek.ir

www.CarGeek.ir


## DTC P2123: Pedal Position Sensor (Main) Circuit High Input

S5JB0A1104083

### Wiring Diagram

Refer to “DTC P2122: Pedal Position Sensor (Main) Circuit Low Input: ”.

### DTC Detecting Condition and Trouble Area

| DTC detecting condition | Trouble area |
|---|---|
| Output voltage of accelerator pedal position sensor (main) is more than specified value for 0.5 seconds continuously. (1 driving detection logic) | • Accelerator pedal position (APP) sensor (main) circuit<br>• Accelerator pedal position (APP) sensor assembly<br>• ECM<br>• Incorrect mounting of accelerator pedal position (APP) sensor assembly |

### DTC Confirmation Procedure

1) With ignition switch turned OFF, connect scan tool.
2) Turn ON ignition switch and clear DTC using scan tool.
3) Keep the accelerator pedal at idle position for 2 seconds.
4) Keep the accelerator pedal at fully depressed position for 2 seconds.
5) Repeat Step 3) and 4) for 3 times.
6) Check DTC.

### DTC Troubleshooting

**NOTE**

**Before this trouble shooting is performed, read the precautions for DTC troubleshooting referring to “Precautions For DTC Troubleshooting: ”.**

| Step | Action | Yes | No |
|---|---|---|---|
| 1 | *Was “Engine and Emission Control System Check” performed?* | Go to Step 2. | Go to “Engine and Emission Control System Check: ”. |
| 2 | **Accelerator pedal position (APP) sensor assembly mounting check**<br>1) Check that accelerator pedal position (APP) sensor assembly has been mounted to vehicle body properly (no pinched floor carpet, etc).<br>*Is it OK?* | Go to Step 3. | Reinstall accelerator pedal position (APP) sensor assembly properly referring to “Accelerator Pedal Position (APP) Sensor Assembly Removal and Installation: in Section 1C”. |
| 3 | **Accelerator pedal position sensor (main) and its circuit check**<br>1) Connect scan tool to DLC with ignition switch turned OFF.<br>2) Turn ON ignition switch, check “APP Sensor 1 Volt” displayed on scan tool.<br>*Is displayed voltage 4.8 V or more?* | Go to Step 4. | Intermittent trouble.<br>Check for intermittent referring to “Intermittent and Poor Connection Inspection: in Section 00”. |

www.cargeek.ir

www.CarGeek.ir

| Step | Action | Yes | No |
|---|---|---|---|
| 4 | **ECM voltage check**<br>1) Disconnect connector from accelerator pedal position (APP) sensor assembly with ignition switch turned OFF.<br>2) Check for proper connection to accelerator pedal position (APP) sensor assembly at “WHT”, “WHT/BLU” and “ORN” wire terminals.<br> 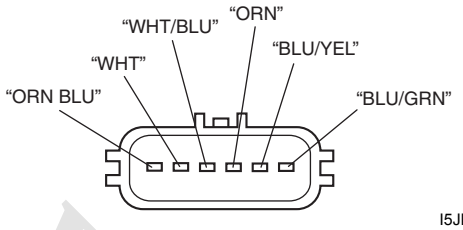 <br><br>I5JB0A110071-01<br>3) If OK, measure voltage between “WHT” wire terminal of accelerator pedal position (APP) sensor assembly connector and vehicle body ground with ignition switch turned ON.<br>*Is voltage 4 – 6 V?* | Go to Step 6. | Go to Step 5. |
| 5 | **Wire harness check**<br>1) Disconnect connectors from ECM with ignition switch turned OFF.<br>2) Check for proper connection of ECM connector at “E23-56” terminal.<br>3) If OK, measure voltage between “E23-56” terminal of ECM connector and engine ground with ignition switch turned ON.<br>*Is voltage 0 V?* | Substitute a known-good ECM and recheck. | “WHT” wire is shorted to power circuit. |
| 6 | **Wire harness check**<br>1) Disconnect connectors from ECM with ignition switch turned OFF.<br>2) Check for proper connection of ECM connector at “E23-56”, “E23-55” and “E23-53” terminals.<br>3) If OK, measure resistance between “WHT/BLU” wire terminal and each “WHT”, “ORN/BLU” wire terminals of accelerator pedal position (APP) sensor assembly connector.<br>*Is each resistance infinity?* | Go to Step 7. | “WHT/BLU” wire is shorted to “WHT” wire and/or “ORN/BLU” wire. |
| 7 | **Wire harness check**<br>1) Turn ON ignition switch.<br>2) Measure voltage between “E23-55” terminal of ECM connector and engine ground.<br>*Is voltage 0 V?* | Go to Step 8. | “WHT/BLU” wire is shorted to power circuit. |
| 8 | **Ground circuit check**<br>1) Connect connectors to ECM with ignition switch turned OFF.<br>2) Measure resistance between “ORN” wire terminal of accelerator pedal position (APP) sensor assembly connector and vehicle body ground.<br>*Is resistance below 3 Ω?* | Go to Step 10. | Go to Step 9. |

www.cargeek.ir

www.CarGeek.ir


| Step | Action | Yes | No |
|---|---|---|---|
| 9 | **Ground circuit check**<br>1) Remove ECM from its bracket with ECM connectors connected.<br>2) Check for proper connection of ECM connector at “E23-54” terminal.<br>3) If OK, measure resistance between “E23-54” terminal of ECM connector and engine ground.<br>*Is resistance below 3 Ω?* | “ORN” wire is open or high resistance circuit. | Faulty ECM ground circuit. If circuit is OK, substitute a known-good ECM and recheck. |
| 10 | **Accelerator pedal position (APP) sensor assembly check**<br>1) Check accelerator pedal position sensor (main) referring to “Accelerator Pedal Position (APP) Sensor Assembly Inspection: in Section 1C”.<br>*Is output voltage within specified value?* | Substitute a known-good ECM and recheck. | Replace accelerator pedal position (APP) sensor assembly. |

## DTC P2127: Pedal Position Sensor (Sub) Circuit Low Input

S5JB0A1104084

### Wiring Diagram

Refer to “DTC P2122: Pedal Position Sensor (Main) Circuit Low Input: ”.

### DTC Detecting Condition and Trouble Area

| DTC detecting condition | Trouble area |
|---|---|
| Output voltage of accelerator pedal position sensor (sub) is less than specified value for 0.5 seconds continuously. (1 driving detection logic) | • Accelerator pedal position (APP) sensor (sub) circuit<br>• Accelerator pedal position (APP) sensor assembly<br>• ECM<br>• Incorrect mounting of accelerator pedal (APP) sensor assembly |

### DTC Confirmation Procedure

1) With ignition switch turned OFF, connect scan tool.
2) Turn ON ignition switch and clear DTC using scan tool.
3) Keep the accelerator pedal at idle position for 2 seconds.
4) Keep the accelerator pedal at fully depressed position for 2 seconds.
5) Repeat Step 3) and 4) for 3 times.
6) Check DTC.

www.cargeek.ir

www.CarGeek.ir

## DTC Troubleshooting

**NOTE**

**Before this trouble shooting is performed, read the precautions for DTC troubleshooting referring to "Precautions For DTC Troubleshooting: ".**

| Step | Action | Yes | No |
|---|---|---|---|
| 1 | *Was "Engine and Emission Control System Check" performed?* | Go to Step 2. | Go to "Engine and Emission Control System Check: ". |
| 2 | **Accelerator pedal position (APP) sensor assembly mounting check**<br>1) Check that accelerator pedal position (APP) sensor assembly has been mounted to vehicle body properly (no pinched floor carpet, etc).<br>*Is it OK?* | Go to Step 3. | Reinstall accelerator pedal position (APP) sensor assembly properly referring to "Accelerator Pedal Position (APP) Sensor Assembly Removal and Installation: in Section 1C". |
| 3 | **Accelerator pedal position sensor (sub) and its circuit check**<br>1) Connect scan tool to DLC with ignition switch turned OFF.<br>2) Turn ON ignition switch, check "APP Sensor 2 Volt" displayed on scan tool.<br>*Is displayed voltage below 0.1 V?* | Go to Step 4. | Intermittent trouble.<br>Check for intermittent referring to "Intermittent and Poor Connection Inspection: in Section 00". |
| 4 | **ECM voltage check**<br>1) Disconnect connector from accelerator pedal position (APP) sensor assembly with ignition switch turned OFF.<br>2) Check for proper connection to accelerator pedal position (APP) sensor assembly at "ORN/BLU", "BLU/GRN" and "BLU/YEL" wire terminals.<br> 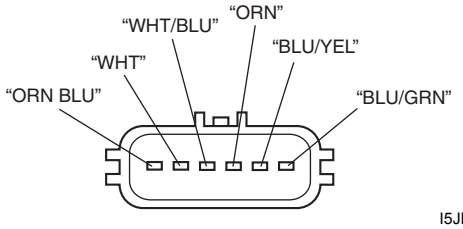 <br><br>I5JB0A110071-01<br>3) If OK, measure voltage between "ORN/BLU" wire terminal of accelerator pedal position (APP) sensor assembly connector and vehicle body ground with ignition switch turned ON.<br>*Is voltage 4 – 6 V?* | Go to Step 7. | Go to Step 5. |
| 5 | **ECM voltage check**<br>1) Turn OFF ignition switch.<br>2) Remove ECM from its bracket with ECM connectors connected.<br>3) Check for proper connection of ECM connector at "E23-53" terminal.<br>4) If OK, measure voltage between "E23-53" terminal of ECM connector and engine ground with ignition switch turned ON.<br>*Is voltage 4 – 6 V?* | "ORN/BLU" wire is open or high resistance circuit. | Go to Step 6. |

www.cargeek.ir

www.CarGeek.ir


| Step | Action | Yes | No |
|---|---|---|---|
| 6 | **Wire harness check**<br>1) Disconnect connectors from ECM with ignition switch turned OFF.<br>2) Measure resistance between “E23-53” terminal of ECM connector and engine ground.<br>*Is resistance infinity?* | Substitute a known-good ECM and recheck. | “ORN/BLU” wire is shorted to ground circuit. |
| 7 | **Wire harness check**<br>1) Disconnect connectors from ECM with ignition switch turned OFF.<br>2) Check for proper connection of ECM connector at “E23-54”, “E23-52” and “E23-51” terminals.<br>3) If OK, measure resistance between “BLU/GRN” wire terminal of accelerator pedal position (APP) sensor assembly connector and vehicle body ground.<br>*Is resistance infinity?* | Go to Step 8. | “BLU/GRN” wire is shorted to ground circuit. |
| 8 | **Wire harness check**<br>1) Measure resistance between “E23-52” and each “E23-54”, “E23-51” terminals of ECM connector with ignition switch turned OFF.<br>*Is each resistance infinity?* | Go to Step 9. | “BLU/GRN” wire is shorted to “ORN” wire and/or “BLU/YEL” wire circuit. |
| 9 | **Wire harness check**<br>1) Measure resistance between “BLU/GRN” wire terminal of accelerator pedal position (APP) sensor assembly connector and “E23-52” terminal of ECM connector with ignition switch turned OFF.<br>*Is resistance below 3 Ω?* | Go to Step 10. | “BLU/GRN” wire is open or high resistance circuit. |
| 10 | **Accelerator pedal position (APP) sensor assembly check**<br>1) Check accelerator pedal position sensor (sub) referring to “Accelerator Pedal Position (APP) Sensor Assembly Inspection: in Section 1C”.<br>*Is output voltage within specified value?* | Substitute a known-good ECM and recheck. | Replace accelerator pedal position (APP) sensor assembly. |

## DTC P2128: Pedal Position Sensor (Sub) Circuit High Input

S5JB0A1104085

### Wiring Diagram

Refer to “DTC P2122: Pedal Position Sensor (Main) Circuit Low Input: ”.

### DTC Detecting Condition and Trouble Area

| DTC detecting condition | Trouble area |
|---|---|
| Output voltage of accelerator pedal position sensor (sub) is more than specified value for 0.5 seconds continuously. (1 driving detection logic) | • Accelerator pedal position (APP) sensor (sub) circuit<br>• Accelerator pedal position (APP) sensor assembly<br>• ECM<br>• Incorrect mounting of accelerator (APP) sensor assembly |

www.cargeek.ir

www.CarGeek.ir

**DTC Confirmation Procedure**

1) With ignition switch turned OFF, connect scan tool.
2) Turn ON ignition switch and clear DTC using scan tool.
3) Keep the accelerator pedal at idle position for 2 seconds.
4) Keep the accelerator pedal at fully depressed position for 2 seconds.
5) Repeat Step 3) and 4) for 3 times.
6) Check DTC.

**DTC Troubleshooting**

**NOTE**

**Before this trouble shooting is performed, read the precautions for DTC troubleshooting referring to "Precautions For DTC Troubleshooting: ".**

| Step | Action | Yes | No |
|---|---|---|---|
| 1 | *Was "Engine and Emission Control System Check" performed?* | Go to Step 2. | Go to "Engine and Emission Control System Check: ". |
| 2 | **Accelerator pedal position (APP) sensor assembly mounting check**<br>1) Check that accelerator pedal position (APP) sensor assembly has been mounted to vehicle body properly (no pinched floor carpet, etc).<br>*Is it OK?* | Go to Step 3. | Reinstall accelerator pedal position (APP) sensor assembly properly referring to "Accelerator Pedal Position (APP) Sensor Assembly Removal and Installation: in Section 1C". |
| 3 | **Accelerator pedal position sensor (sub) and its circuit check**<br>1) Connect scan tool to DLC with ignition switch turned OFF.<br>2) Turn ON ignition switch, check "APP Sensor 2 Volt" displayed on scan tool.<br>*Is displayed voltage 4.8 V or more?* | Go to Step 4. | Intermittent trouble.<br>Check for intermittent referring to "Intermittent and Poor Connection Inspection: in Section 00". |
| 4 | **ECM voltage check**<br>1) Disconnect connector from accelerator pedal position (APP) sensor assembly with ignition switch turned OFF.<br>2) Check for proper connection to accelerator pedal position (APP) sensor assembly at "ORN/BLU", "BLU/GRN" and "BLU/YEL" wire terminals.<br> 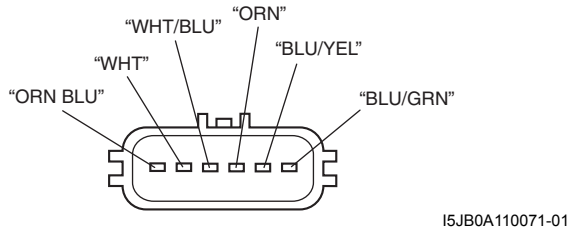 <br><br>3) If OK, measure voltage between "ORN/BLU" wire terminal of accelerator pedal position (APP) sensor assembly connector and vehicle body ground with ignition switch turned ON.<br>*Is voltage 4 – 6 V?* | Go to Step 6. | Go to Step 5. |

www.cargeek.ir

www.CarGeek.ir


| Step | Action | Yes | No |
|---|---|---|---|
| 5 | **Wire harness check**<br>1) Disconnect connectors from ECM with ignition switch turned OFF.<br>2) Check for proper connection of ECM connector at “E23-53” terminal.<br>3) If OK, measure voltage between “E23-53” terminal of ECM connector and engine ground with ignition switch turned ON.<br>*Is voltage 0 V?* | Substitute a known-good ECM and recheck. | “ORN/BLU” wire is shorted to power circuit. |
| 6 | **Wire harness check**<br>1) Disconnect connectors from ECM with ignition switch turned OFF.<br>2) Check for proper connection of ECM connector at “E23-56”, “E23-53” and “E23-52” terminals.<br>3) If OK, measure resistance between “BLU/GRN” wire terminal and each “WHT”, “ORN/BLU” wire terminals of accelerator pedal position (APP) sensor assembly connector.<br>*Is each resistance infinity?* | Go to Step 7. | “BLU/GRN” wire is shorted to “WHT” wire and/or “ORN/BLU” wire. |
| 7 | **Wire harness check**<br>1) Turn ON ignition switch.<br>2) Measure voltage between “E23-52” terminal of ECM connector and engine ground.<br>*Is voltage 0 V?* | Go to Step 8. | “BLU/GRN” wire is shorted to power circuit. |
| 8 | **Ground circuit check**<br>1) Connect connectors to ECM with ignition switch turned OFF.<br>2) Measure resistance between “BLU/YEL” wire terminal of accelerator pedal position (APP) sensor assembly connector and vehicle body ground.<br>*Is resistance below 3 Ω?* | Go to Step 10. | Go to Step 9. |
| 9 | **Ground circuit check**<br>1) Remove ECM from its bracket with ECM connectors connected.<br>2) Check for proper connection of ECM connector at “E23-51” terminal.<br>3) If OK, measure resistance between “E23-51” terminal of ECM connector and engine ground.<br>*Is resistance below 3 Ω?* | “BLU/YEL” wire is open or high resistance circuit. | Faulty ECM ground circuit. If circuit is OK, substitute a known-good ECM and recheck. |
| 10 | **Accelerator pedal position (APP) sensor assembly check**<br>1) Check accelerator pedal position sensor (sub) referring to “Accelerator Pedal Position (APP) Sensor Assembly Inspection: in Section 1C”.<br>*Is output voltage within specified value?* | Substitute a known-good ECM and recheck. | Replace accelerator pedal position (APP) sensor assembly. |

www.cargeek.ir

www.CarGeek.ir

## DTC P2135: Throttle Position Sensor (Main / Sub) Voltage Correlation

S5JB0A1104086

### Wiring Diagram

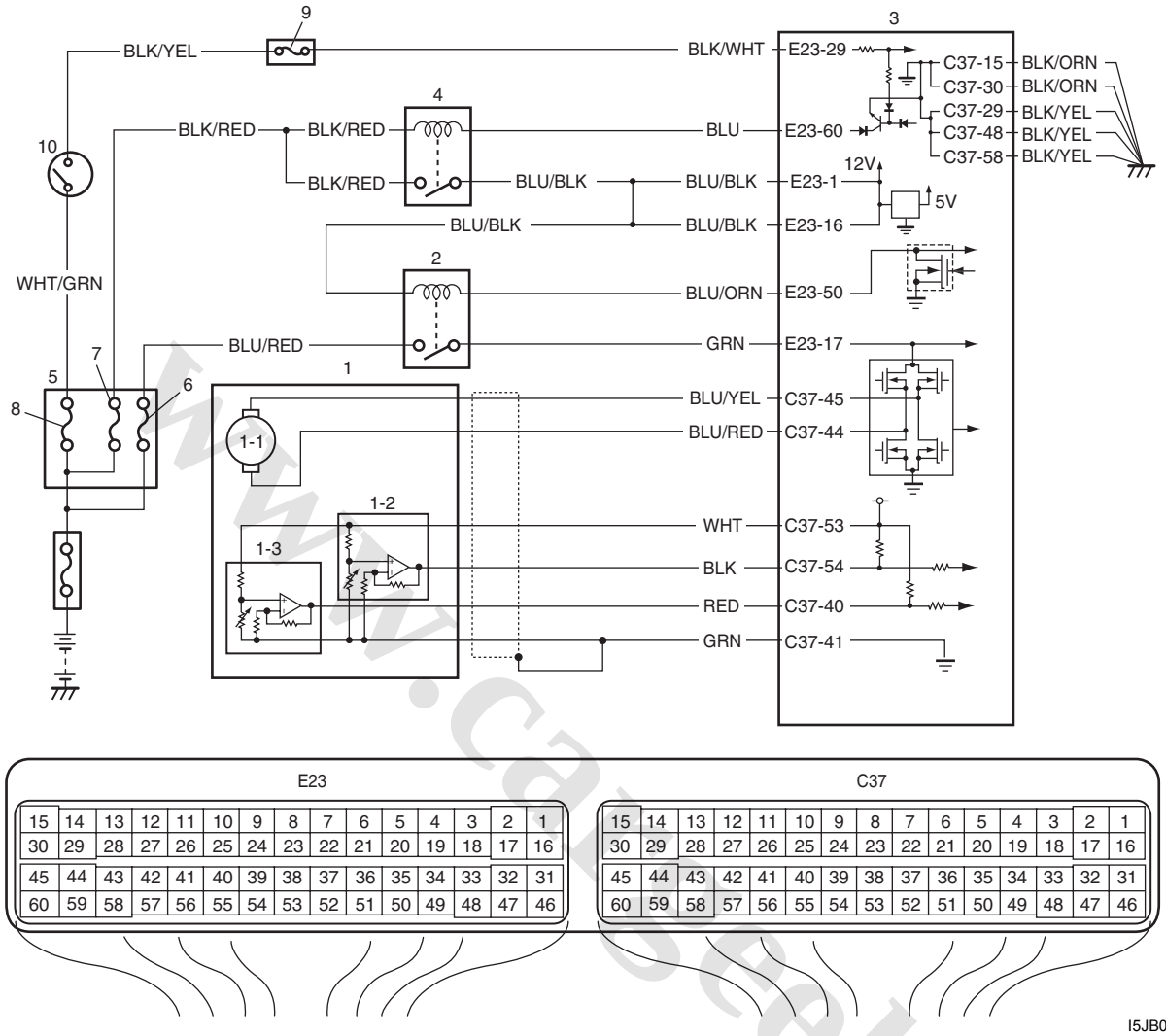


I5JB0A110072-01

| | | |
|---|---|---|
| 1. Electric throttle body assembly | 3. ECM | 8. “IGN” fuse |
| 1-1. Throttle actuator | 4. Main relay | 9. “IG COIL” fuse |
| 1-2. Throttle position sensor (main) | 5. Fuse box No.2 | 10. Ignition switch |
| 1-3. Throttle position sensor (sub) | 6. “THR MOT” fuse | |
| 2. Throttle actuator control relay | 7. “FI” fuse | |

### DTC Detecting Condition and Trouble Area

| DTC detecting condition | Trouble area |
|---|---|
| Difference between the opening angle based on throttle position sensor (main) and the opening angle based on throttle position sensor (sub) is more than specification for specified time continuously.<br>(1 driving detection logic) | • Throttle position sensor (main) and (sub) circuit<br>• Electric throttle body assembly<br>• ECM |

### DTC Confirmation Procedure

1) With ignition switch turned OFF, connect scan tool.
2) Turn ON ignition switch and clear DTC using scan tool.
3) Keep the accelerator pedal at idle position for 2 seconds.
4) Keep the accelerator pedal at fully depressed position for 2 seconds.
5) Repeat Step 3) and 4) for 3 times.
6) Check DTC.

www.cargeek.ir

www.CarGeek.ir


**DTC Troubleshooting**

**NOTE**

**Before this trouble shooting is performed, read the precautions for DTC troubleshooting referring to "Precautions For DTC Troubleshooting: ".**

| Step | Action | Yes | No |
|---|---|---|---|
| 1 | *Was "Engine and Emission Control System Check" performed?* | Go to Step 2. | Go to "Engine and Emission Control System Check: ". |
| 2 | **Throttle position sensor and its circuit check**<br>1) Connect scan tool to DLC with ignition switch turned OFF.<br>2) Turn ON ignition switch, check each voltage of "TP Sensor 1 Volt" and "TP Sensor 2 Volt" displayed on scan tool when accelerator pedal is idle position and fully depressed.<br>*Is displayed each TP sensor value as described voltage in "Scan Tool Data: "?* | Intermittent trouble.<br>Check for intermittent referring to "Intermittent and Poor Connection Inspection: in Section 00". | Go to Step 3. |
| 3 | **ECM voltage check**<br>1) Disconnect connector from electric throttle body assembly with ignition switch turned OFF.<br>2) Check for proper connection to electric throttle body assembly at "RED", "GRN", "WHT" and "BLK" wire terminals.<br>**For J20 engine**<br> 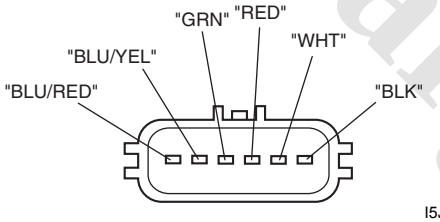 <br><br>I5JB0A110042-01<br>**For M16 engine**<br> 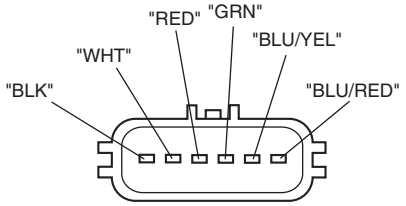 <br><br>I5JB0A110043-01<br>3) If OK, measure voltage between "WHT" wire terminal of electric throttle body assembly connector and engine ground with ignition switch turned ON.<br>*Is voltage 4 – 6 V?* | Go to Step 6. | Go to Step 4. |
| 4 | **Wire harness check**<br>1) Disconnect connectors from ECM with ignition switch turned OFF.<br>2) Measure resistance between "C37-53" terminal of ECM connector and engine ground.<br>*Is resistance infinity?* | Go to Step 5. | "WHT" wire is shorted to other circuit. |

www.cargeek.ir

www.CarGeek.ir

| Step | Action | Yes | No |
|---|---|---|---|
| 5 | **Wire harness check**<br>1) Measure voltage between “C37-53” terminal of ECM connector and engine ground with ignition switch turned ON.<br>*Is voltage 0 V?* | Substitute a known-good ECM and recheck. | “WHT” wire is shorted to other circuit. |
| 6 | **Wire harness check**<br>1) Measure voltage between “BLK” wire terminal of electric throttle body assembly connector and engine ground, between “RED” wire terminal of electric throttle body assembly connector and engine ground with ignition switch turned ON.<br>*Is each voltage 4 – 6 V?* | Go to Step 9. | Go to Step 7. |
| 7 | **Wire harness check**<br>1) Turn OFF ignition switch.<br>2) Disconnect connectors from ECM.<br>3) Check for proper connection of ECM connector at “C37-54” and “C37-40” terminals.<br>4) If OK, measure voltage between “C37-54” terminal of ECM connector and engine ground, between “C37-40” terminal of ECM connector and engine ground.<br>*Is each voltage 0 V?* | Go to Step 8. | “BLK” wire or “RED” wire is shorted to other circuit. |
| 8 | **Wire harness check**<br>1) Measure resistance between “BLK” wire terminal of electric throttle body assembly connector and engine ground, between “RED” wire terminal of electric throttle body assembly connector and engine ground with ignition switch turned OFF.<br>*Is each resistance infinity?* | Substitute a known-good ECM and recheck. | “BLK” wire or “RED” wire is shorted to other circuit. |
| 9 | **Electric throttle body assembly check**<br>1) Check throttle position sensor referring to “Throttle Position Sensor Performance Check” under “Electric Throttle Body Assembly On-Vehicle Inspection: in Section 1C”.<br>*Is each output voltage within specified value?* | Substitute a known-good ECM and recheck. | Replace electric throttle body assembly. |

www.cargeek.ir

www.CarGeek.ir


## DTC P2138: Pedal Position Sensor (Main / Sub) Voltage Correlation

S5JB0A1104087

### Wiring Diagram

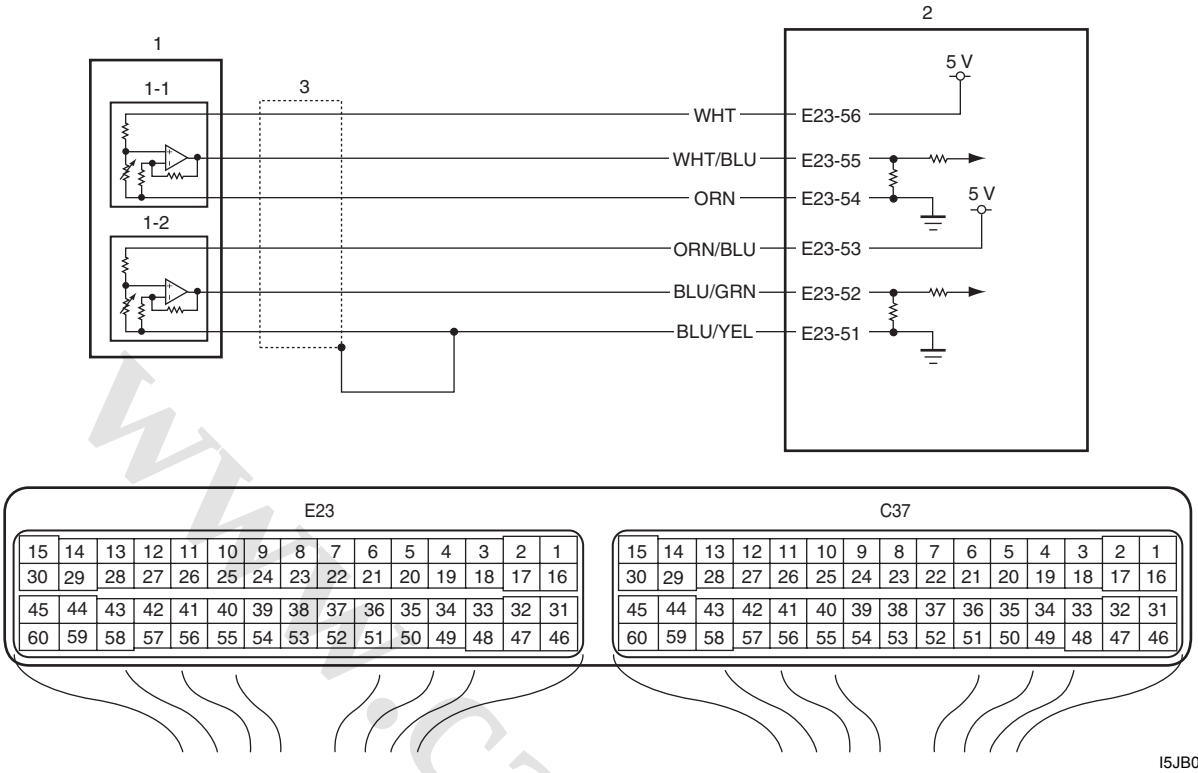


I5JB0A110070-01

| | | |
|---|---|---|
| 1. Accelerator pedal position (APP) sensor assembly | 1-2. Accelerator pedal position (APP) sensor (sub) | 3. Ground of accelerator pedal position (APP) sensor for shield wire |
| 1-1. Accelerator pedal position (APP) sensor (main) | 2. ECM | |

### DTC Detecting Condition and Trouble Area

| DTC detecting condition | Trouble area |
|---|---|
| Difference between the opening angle based on accelerator pedal position sensor (main) and the opening angle based on accelerator pedal position sensor (sub) is more than specification for specified time continuously. (1 driving detection logic) | • Accelerator pedal position (APP) sensor (main) and (sub) circuit<br>• Accelerator pedal position (APP) sensor assembly<br>• ECM |

### DTC Confirmation Procedure

1) With ignition switch turned OFF, connect scan tool.
2) Turn ON ignition switch and clear DTC using scan tool.
3) Keep the accelerator pedal at idle position for 2 seconds.
4) Keep the accelerator pedal at fully depressed position for 2 seconds.
5) Repeat Step 3) and 4) for 3 times.
6) Check DTC.

www.cargeek.ir

www.CarGeek.ir

## DTC Troubleshooting

**NOTE**

**Before this trouble shooting is performed, read the precautions for DTC troubleshooting referring to "Precautions For DTC Troubleshooting: ".**

| Step | Action | Yes | No |
|---|---|---|---|
| 1 | *Was "Engine and Emission Control System Check" performed?* | Go to Step 2. | Go to "Engine and Emission Control System Check: ". |
| 2 | **Accelerator pedal position sensor and its circuit check**<br>1) Connect scan tool to DLC with ignition switch turned OFF.<br>2) Turn ON ignition switch.<br>3) Check each voltage of "APP Sensor 1 Volt" and "APP Sensor 2 Volt" displayed on scan tool when accelerator pedal is idle position and fully depressed.<br>*Is displayed each APP sensor value as described voltage in "Scan Tool Data: "?* | Intermittent trouble.<br>Check for intermittent referring to "Intermittent and Poor Connection Inspection: in Section 00" | Go to Step 3. |
| 3 | **ECM voltage check**<br>1) Disconnect connector from accelerator pedal position (APP) sensor assembly with ignition switch turned OFF.<br>2) Check for proper connection to accelerator pedal position (APP) sensor assembly at "BLU/YEL", "BLU/GRN", "ORN/BLU", "ORN", "WHT/BLU" and "WHT" wire terminals.<br> 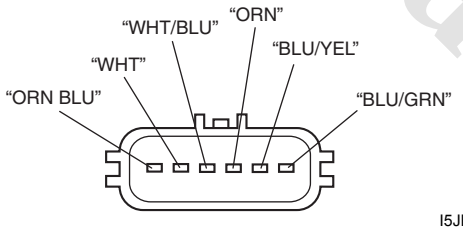 <br><br>I5JB0A110071-01<br>3) If OK, measure voltage between "WHT" wire terminal of accelerator pedal position (APP) sensor assembly connector and vehicle body ground, between "ORN/BLU" wire terminal of accelerator pedal position (APP) sensor assembly connector and vehicle body ground with ignition switch turned ON.<br>*Is each voltage 4 – 6 V?* | Go to Step 6. | Go to Step 4. |
| 4 | **Wire harness check**<br>1) Disconnect connectors from ECM with ignition switch turned OFF.<br>2) Check for proper connection of ECM connector at "E23-56" and "E23-53" terminals.<br>3) If OK, measure resistance between "E23-56" terminal of ECM connector and engine ground, between "E23-53" terminal of ECM connector and engine ground.<br>*Is each resistance infinity?* | Go to Step 5. | "WHT" wire or "ORN/BLU" wire is shorted to other circuit. |

www.cargeek.ir

www.CarGeek.ir


| Step | Action | Yes | No |
|---|---|---|---|
| 5 | **Wire harness check**<br>1) Measure voltage between “E23-56” terminal of ECM connector and engine ground, between “E23-53” terminal of ECM connector and engine ground with ignition switch turned ON.<br>*Is each voltage 0 V?* | Substitute a known-good ECM and recheck. | “WHT” wire or “ORN/GRN” wire is shorted to other circuit. |
| 6 | **Wire harness check**<br>1) Disconnect connectors from ECM with ignition switch turned OFF.<br>2) Check for proper connection of ECM connector at “E23-55”, “E23-54”, “E23-52” and “E23-51” terminals.<br>3) If OK, measure resistance between “WHT/BLU” wire terminal of accelerator pedal position (APP) sensor assembly connector and vehicle body ground, between “BLU/GRN” wire terminal of accelerator pedal position (APP) sensor assembly connector and vehicle body ground.<br>*Is each resistance infinity?* | Go to Step 7. | “WHT/BLU” wire or “BLU/GRN” wire is shorted to other circuit. |
| 7 | **Wire harness check**<br>1) Turn ON ignition switch.<br>2) Measure voltage between “E23-55” terminal of ECM connector and engine ground, between “E23-52” terminal of ECM connector and engine ground.<br>*Is each voltage 0 V?* | Go to Step 8. | “WHT/BLU” wire or “BLU/GRN” wire is shorted to other circuit. |
| 8 | **Accelerator pedal position (APP) sensor assembly check**<br>1) 1)Check accelerator pedal position sensor referring to “Accelerator Pedal Position (APP) Sensor Assembly Inspection: in Section 1C”.<br>*Is output voltage within specified value?* | Substitute a known-good ECM and recheck. | Replace accelerator pedal position (APP) sensor assembly. |

## DTC P2227 / P2228 / P2229: Barometric Pressure Circuit Malfunction

S5JB0A1104062

## DTC P2227: Barometric Pressure Circuit Range / Performance
## DTC P2228: Barometric Pressure Circuit Low
## DTC P2229: Barometric Pressure Circuit High

### System Description

Barometric pressure sensor is installed in ECM.

### DTC Detecting Condition and Trouble Area

| DTC detecting condition | Trouble area |
|---|---|
| **DTC P2227:**<br>Difference of barometric pressure value and intake manifold pressure value is higher than specified value while engine cranking.<br>(2 driving cycle detection logic) | • Manifold absolute pressure sensor performance problem<br>• Barometric pressure sensor in ECM |
| **DTC P2228:**<br>Barometric pressure signal less than specified value is detected.<br>(1 driving cycle detection logic) | • Barometric pressure sensor in ECM |
| **DTC P2229:**<br>Barometric pressure signal more than specified value is detected.<br>(1 driving cycle detection logic) | |

www.cargeek.ir

www.CarGeek.ir

**DTC Confirmation Procedure**

**DTC P2227:**

**⚠ WARNING**

- **When performing a road test, select a place where there is no traffic or possibility of a traffic accident and be very careful during testing to avoid occurrence of an accident.**
- **Road test should be carried out by 2 persons, a driver and a tester, on a level road.**

1) Connect scan tool to DLC with ignition switch turned OFF.
2) Turn ON ignition switch and clear DTC, pending DTC and freeze frame data by using scan tool and warm up engine to normal operating temperature.
3) Check DTC and pending DTC by using scan tool.

**DTC P2228 / P2229:**

1) Connect scan tool to DLC with ignition switch turned OFF.
2) Turn ON ignition switch, clear DTC by using scan tool and run engine for 1 min.
3) Check DTC and pending DTC by using scan tool.

**DTC Troubleshooting**

**NOTE**

**Before this trouble shooting is performed, read the precautions for DTC troubleshooting referring to "Precautions For DTC Troubleshooting: ".**

| Step | Action | Yes | No |
|---|---|---|---|
| 1 | *Was "Engine and Emission Control System Check" performed?* | Go to Step 2. | Go to "Engine and Emission Control System Check: ". |
| 2 | *Is DTC P2227 set?* | Go to Step 3. | Substitute a known-good ECM and recheck. |
| 3 | **MAP sensor check**<br>1) Check MAP sensor and its circuit referring to "DTC P0107: Manifold Absolute Pressure Circuit Low Input: "and/or "DTC P0108: Manifold Absolute Pressure Circuit High Input: ".<br>*Is check result satisfactory?* | Substitute a known-good ECM and recheck. | MAP sensor or its circuit malfunction. |

www.cargeek.ir

www.CarGeek.ir


## Inspection of ECM and Its Circuits

S5JB0A1104063

ECM and its circuits can be checked by measuring voltage, pulse signal and resistance with special tool connected.

**⚠ CAUTION**

**ECM cannot be checked by itself. It is strictly prohibited to connect voltmeter or ohmmeter to ECM with ECM connectors disconnected from it.**

### Voltage Check

1) Remove ECM (1) from its bracket referring to “Engine Control Module (ECM) Removal and Installation: in Section 1C”.
2) Connect special tool between ECM and ECM connectors securely.

   **Special tool**
   **(A): 09933–06320**

3) Check voltage and/or pulse signal using voltmeter (2) and oscilloscope (3).

**NOTE**

- **As each terminal voltage is affected by battery voltage, confirm that it is 11 V or more when ignition switch is turned ON.**
- **Voltage with asterisk (*) cannot be measured with voltmeter because it is pulse signal. Use oscilloscope for its check if necessary.**

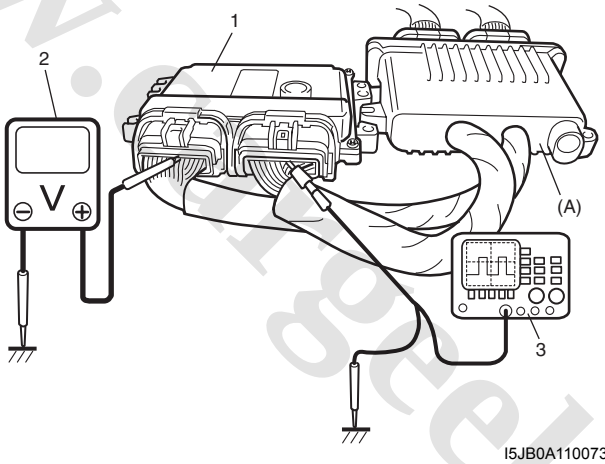


I5JB0A110073-01

- **Before performed this inspection, be sure to read the “Precautions of ECM Circuit Inspection: ”.**

**Viewed from harness side**

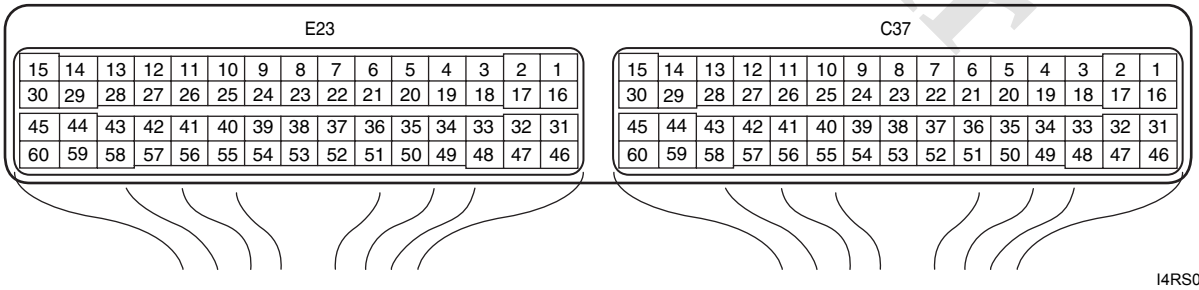


I4RS0A110055-01

www.cargeek.ir

www.CarGeek.ir

| Terminal No. | Wire color | Circuit | Normal voltage | Condition | Remarks |
|---|---|---|---|---|---|
| C37-1 | PNK | Fuel injector No.1 | 10 – 14 V | Ignition switch turned ON. | — |
| | | | *0 – 0.6 V<br>↑↓<br>10 – 14 V<br>(“Reference waveform No.1: ”, “Reference waveform No.2: ” and “Reference waveform No.31: ”) | Engine running at idle after warmed up engine. | Output signal is active low pulse. Pulse frequency varies depending on engine speed. |
| C37-2 | PNK/ BLK | Fuel injector No.2 | 10 – 14 V | Ignition switch turned ON. | — |
| | | | *0 – 0.6 V<br>↑↓<br>10 – 14 V<br>(“Reference waveform No.1: ” and “Reference waveform No.3: ”) | Engine running at idle after warmed up engine. | Output signal is active low pulse. Pulse frequency varies depending on engine speed. |
| C37-3 | YEL/ GRN | EGR valve (stepper motor coil 3) | 10 – 14 V | Ignition switch turned ON. | — |
| | | | *0 – 1 V<br>↑↓<br>10 – 14 V<br>(“Reference waveform No.4: ”) | Ignition switch is turned to ST (cranking) position. | Output signal is active low duty pulse. Number of pulse generated times varies depending on vehicle condition. |
| C37-4 | YEL | EGR valve (stepper motor coil 4) | 10 – 14 V | Ignition switch turned ON. | — |
| | | | *0 – 1 V<br>↑↓<br>10 – 14 V<br>(“Reference waveform No.4: ”) | Ignition switch is turned to ST (cranking) position. | Output signal is active low duty pulse. Number of pulse generated times varies depending on vehicle condition. |
| C37-5 | YEL/ BLK | EGR valve (stepper motor coil 1) | 10 – 14 V | Ignition switch turned ON. | — |
| | | | *0 – 1 V<br>↑↓<br>10 – 14 V<br>(“Reference waveform No.4: ”) | Ignition switch is turned to ST (cranking) position. | Output signal is active low duty pulse. Number of pulse generated times varies depending on vehicle condition. |
| C37-6 | YEL/ RED | EGR valve (stepper motor coil 2) | 10 – 14 V | Ignition switch turned ON. | — |
| | | | *0 – 1 V<br>↑↓<br>10 – 14 V<br>(“Reference waveform No.4: ”) | Ignition switch is turned to ST (cranking) position. | Output signal is active low duty pulse. Number of pulse generated times varies depending on vehicle condition. |
| C37-7 | BLU/ ORN | Power steering pump pressure switch signal | 10 – 14 V | Ignition switch turned ON. | — |
| | | | 0 – 1 V | With engine at idle speed, turning steering wheel to the right or left as far as it stops. | |
| C37-8 | BRN/ RED (for M16 engine) BRN/ BLK (for J20 engine) | Generator field coil monitor signal | 10 – 14 V | Ignition switch turned ON. | Signal is duty pulse. Duty ratio varies depending on vehicle condition. |
| | | | *0 – 1 V<br>↑↓<br>10 – 14 V<br>(“Reference waveform No.5: ” and “Reference waveform No.6: ”) | Engine running at idle after warmed up engine. | |

www.cargeek.ir

www.CarGeek.ir


| Terminal No. | Wire color | Circuit | Normal voltage | Condition | Remarks |
|---|---|---|---|---|---|
| C37-9 | BLU | Electric load current sensor signal (for J20 engine) | 0.5 – 1.0 V | Ignition switch turned ON. | — |
| | | | 1.3 – 1.7 V | Run engine at 2000 rpm, headlight switch turned ON. | |
| | | | 1.8 – 2.4 V | Run engine at 2000 rpm, headlight switch ON and blower selector at HI position. | |
| C37-10 | GRN/ WHT | CO adjusting resistor signal (for J20 engine, if equipped) | 0 – 5 V | Ignition switch turned ON. | — |
| C37-11 | RED | Oxygen signal of heated oxygen sensor-2 | 4 – 5 V | Ignition switch turned ON. | — |
| | | | *Approx. 0.15 V (“Reference waveform No.7: ” and “Reference waveform No.8: ”) | Engine running at idle after warmed up engine. | |
| C37-12 | GRY/ BLK | A/C refrigerant pressure sensor signal (if equipped with A/C) | 1.38 – 1.52 V | Engine running, A/C switch OFF and blower selector at OFF position, A/C refrigerant pressure: 800 kPa (116 psi) | — |
| | | | 2.15 – 2.38 V | Engine running, A/C switch ON and blower selector at 1st position or more, A/C refrigerant pressure: 1400 kPa (203 psi) | |
| | | | 2.67 – 2.95 V | Engine running, A/C switch ON and blower selector at 1st position or more, A/C refrigerant pressure: 1800 kPa (261 psi) | |
| C37-13 | GRN/ BLK | EVAP canister purge valve output | 10 – 14 V | Ignition switch turned ON with engine at stop. | — |
| | | | *0 – 0.6 V ↑↓ 10 – 14 V (“Reference waveform No.9: ”) | Set EVAP canister purge valve at 52% by using “Misc Test” of scan tool. | Output signal is active low duty pulse. Duty ratio varies depending on vehicle condition. |
| C37-14 | GRY/ RED | Output of 5 V power source for MAP sensor, A/C refrigerant pressure sensor, electric load current sensor (for J20 engine) and CO adjusting resistor (if equipped) | 4.5 – 5.5 V | Ignition switch turned ON. | — |
| C37-15 | BLK/ ORN | Ground for ECM | Below 0.3 V | Ignition switch turned ON. | — |

www.cargeek.ir

www.CarGeek.ir

| Terminal No. | Wire color | Circuit | Normal voltage | Condition | Remarks |
|---|---|---|---|---|---|
| C37-16 | PNK/ GRN | Fuel injector No.3 | 10 – 14 V | Ignition switch turned ON. | — |
| | | | *0 – 0.6 V ↑↓ 10 – 14 V (“Reference waveform No.1: ” and “Reference waveform No.10: ”) | Engine running at idle after warmed up engine. | Output signal is active low pulse. Pulse frequency varies depending on engine speed. |
| C37-17 | PNK/ BLU | Fuel injector No.4 | 10 – 14 V | Ignition switch turned ON. | — |
| | | | *0 – 0.6 V ↑↓ 10 – 14 V (“Reference waveform No.1: ” and “Reference waveform No.11: ”) | Engine running at idle after warmed up engine. | Output signal is active low pulse. Pulse frequency varies depending on engine speed. |
| C37-18 | BRN/ YEL | Ignition coil No.4 (for J20 engine) | 0 – 0.6 V | Ignition switch turned ON. | — |
| | | | *0 – 0.6 V ↑↓ 3 – 5 V (“Reference waveform No.12: ” and “Reference waveform No.13: ”) | Engine running at idle after warmed up engine. | Output signal is active high pulse. Pulse frequency varies depending on engine speed. |
| C37-19 | BRN/ WHT | Ignition coil No.3 (for J20 engine) | 0 – 0.6 V | Ignition switch turned ON. | — |
| | | | *0 – 0.6 V ↑↓ 3 – 5 V (“Reference waveform No.12: ” and “Reference waveform No.14: ”) | Engine running at idle after warmed up engine. | Output signal is active high pulse. Pulse frequency varies depending on engine speed. |
| C37-20 | BRN/ BLK | Ignition coil No.2 and No.3 (for M16 engine) | 0 – 0.6 V | Ignition switch turned ON. | — |
| | | Ignition coil No.2 (for J20 engine) | *0 – 0.6 V ↑↓ 3 – 5 V (“Reference waveform No.12: ” and “Reference waveform No.15: ”) | Engine running at idle after warmed up engine. | Output signal is active high pulse. Pulse frequency varies depending on engine speed. |
| C37-21 | BRN | Ignition coil No.1 and No.4 (for M16 engine) | 0 – 0.6 V | Ignition switch turned ON. | — |
| | | Ignition coil No.1 (for J20 engine) | *0 – 0.6 V ↑↓ 3 – 5 V (“Reference waveform No.12: ” and “Reference waveform No.16: ”) | Engine running at idle after warmed up engine. | Output signal is active high pulse. Pulse frequency varies depending on engine speed. |
| C37-22 | BLK/ YEL | Starting motor control relay output | 0 – 1 V | Ignition switch turned ON. | — |
| | | | 8 – 14 V | Ignition switch turned to ST (engine cranking) position. | |
| C37-23 | — | — | — | — | — |

www.cargeek.ir

www.CarGeek.ir


| Terminal No. | Wire color | Circuit | Normal voltage | Condition | Remarks |
|---|---|---|---|---|---|
| C37-24 | PPL/ YEL | Engine coolant temp. (ECT) sensor signal | 3.3 – 3.8 V | Ignition switch turned ON, ECT at 0 °C, 32 °F. | — |
| | | | 1.38 – 1.72 V | Ignition switch turned ON, ECT at 50 °C, 122 °F. | |
| | | | 0.40 – 0.53 V | Ignition switch turned ON, ECT at 100 °C, 212 °F. | |
| C37-25 | LT GRN | Intake air temp. (IAT) sensor signal | 3.18 – 3.67 V | Ignition switch turned ON, IAT at 0 °C, 32 °F. | — |
| | | | 1.32 – 1.65 V | Ignition switch turned ON, IAT at 40 °C, 104 °F. | |
| | | | 0.46 – 0.60 V | Ignition switch turned ON, IAT at 80 °C, 176 °F. | |
| C37-26 | RED | Mass air flow (MAF) sensor signal | 0.5 – 1.0 V | Ignition switch turned ON with engine at stop. | — |
| | | | 1.3 – 1.8 V (“Reference waveform No.17: ”) | When engine running at specified idle speed after warmed up. | |
| C37-27 | BLU | Ground for MAF sensor | Below 0.3 V | Ignition switch turned ON. | — |
| C37-28 | BRN/ BLK | Generator control signal output | *0 – 0.6 V ↑↓ 5 – 7 V (“Reference waveform No.5: ” and “Reference waveform No.6: ”) | Engine running at idle speed, headlight switch turned ON. | Output signal is active low duty pulse. Duty ratio varies depending on vehicle condition. |
| C37-29 | BLK/ YEL | Ground for ECM | Below 0.3 V | Ignition switch turned ON. | — |
| C37-30 | BLK/ ORN | Ground for ECM | Below 0.3 V | Ignition switch turned ON. | — |
| C37-31 | BLK/ YEL | Ground for A/F sensor heater | Below 0.3 V | Ignition switch turned ON. | — |
| C37-32 | PNK/ BLU | Heater output of A/ F sensor | 10 – 14 V | Ignition switch turned ON. | — |
| | | | *0 – 1 V ↑↓ 10 – 14 V (“Reference waveform No.18: ”) | Engine running at idle after warmed up engine. | Output signal is active low duty pulse. Duty ratio varies depending on engine condition. |
| C37-33 | GRY/ RED | Intake manifold tuning vacuum solenoid valve output (for J20 engine) | 10 – 14 V | Ignition switch turned ON. | — |
| | | | 0 – 1 V (“Reference waveform No.19: ”) | Engine running at idle after warmed up engine. | |
| C37-34 | RED/ BLU | Ground for A/F sensor adjusting resistor | Below 0.3 V | Ignition switch turned ON. | — |
| C37-35 | RED/ YEL | A/F sensor adjusting resistor signal | 0.15 – 4.82 V | Ignition switch turned ON. | — |
| C37-36 | PNK | Crankshaft position (CKP) sensor (–) (for J20 engine) | 0 – 1 V | Ignition switch turned ON. | — |
| | | | *4 – 6 V ↑↓ –4 – –6 V (“Reference waveform No.20: ” and “Reference waveform No.21: ”) | Engine running at idle after warmed up engine. | Output signal is sinusoidal waveform. Waveform frequency varies depending on engine speed. (30 (36 – 6) pulses are generated par 1 crankshaft revolution.) |

www.cargeek.ir

www.CarGeek.ir

| Terminal No. | Wire color | Circuit | Normal voltage | Condition | Remarks |
|---|---|---|---|---|---|
| C37-37 | BLK | A/F sensor signal (–) | 2.6 – 2.8 V (“Reference waveform No.18: ”) | Engine running at idle after warmed up engine. | — |
| C37-38 | WHT | A/F sensor signal (+) | 3.0 – 3.2 V (“Reference waveform No.18: ”) | Engine running at idle after warmed up engine. | — |
| C37-39 | — | — | — | — | — |
| C37-40 | RED | Throttle position sensor (sub) signal | 1.60 – 1.91 V | Ignition switch turned ON and accelerator pedal at idle position after warmed up engine. | — |
| | | | 3.88 – 4.45 V | Ignition switch turned ON and accelerator pedal at full depressed position after warmed up engine. | |
| C37-41 | GRN | Ground for throttle position sensor | Below 0.3 V | Ignition switch turned ON. | — |
| C37-42 | — | — | — | — | — |
| C37-43 | — | — | — | — | — |
| C37-44 | BLU/ RED | Output of throttle actuator | 0 – 1 V | Ignition switch turned ON and accelerator pedal at idle position after warmed up engine. | Output signal is duty pulse. Duty ratio varies depending on throttle valve and accelerator pedal position. |
| | | | *0 – 1 V ↑↓ 10 – 14 V (“Reference waveform No.22: ” and “Reference waveform No.23: ”) | Ignition switch turned ON and accelerator pedal at full depressed position after warmed up engine. | |
| C37-45 | BLU/ YEL | Output of throttle actuator | 0 – 1 V | Ignition switch turned ON and accelerator pedal at full depressed position after warmed up engine. | Output signal is duty pulse. Duty ratio varies depending on throttle valve and accelerator pedal position. |
| | | | *0 – 1 V ↑↓ 10 – 14 V (“Reference waveform No.22: ” and “Reference waveform No.23: ”) | Ignition switch turned ON and accelerator pedal at idle position after warmed up engine. | |
| C37-46 | — | — | — | — | — |
| C37-47 | BLK/ RED | Heater output of heated oxygen sensor-2 | 10 – 14 V | Ignition switch turned ON. | — |
| | | | *0 – 1 V ↑↓ 10 – 14 V (“Reference waveform No.7: ” and “Reference waveform No.8: ”) | Engine running at idle after warmed up engine. | Output signal is active low duty pulse. Duty ratio varies depending on engine condition. |
| C37-48 | BLK/ YEL | Ground for ECM | Below 0.3 V | Ignition switch turned ON. | — |
| C37-49 | — | — | — | — | — |
| C37-50 | — | — | — | — | — |

www.cargeek.ir

www.CarGeek.ir


| Terminal No. | Wire color | Circuit | Normal voltage | Condition | Remarks |
|---|---|---|---|---|---|
| C37-51 | WHT/ BLU | CKP sensor signal (for M16 engine) | 0 – 1 V or 4 – 5 V | Ignition switch turned ON. | — |
| | | | *4 – 5 V<br>↑↓<br>0 – 0.6 V<br>("Reference waveform No.20: " and "Reference waveform No.21: ") | Engine running at idle after warmed up engine. | Sensor signal is pulse. Pulse frequency which varies depending on engine speed. (30 (36 – 6) pulses are generated per 1 crankshaft revolution.) |
| | GRN | Crankshaft position (CKP) sensor (+) (for J20 engine) | 0 – 1 V | Ignition switch turned ON. | — |
| | | | *4 – 6 V<br>↑↓<br>–4 – –6 V<br>("Reference waveform No.20: " and "Reference waveform No.21: ") | Engine running at idle after warmed up engine. | Output signal is sinusoidal waveform. Waveform frequency varies depending on engine speed. (30 (36 – 6) pulses are generated par 1 crankshaft revolution.) |
| C37-52 | WHT/ RED | CMP sensor signal | 0 – 1 V or 4 – 5 V | Ignition switch turned ON. | — |
| | | | *0 – 0.6 V<br>↑↓<br>4 – 5 V<br>("Reference waveform No.20: " and "Reference waveform No.21: ") | Engine running at idle after warmed up engine. | Sensor signal is pulse. Pulse frequency varies depending on engine speed. (6 pulses are generated per 1 camshaft revolution.) |
| C37-53 | WHT | Output for 5 V power source of throttle position sensor | 4.5 – 5.5 V | Ignition switch turned ON. | — |
| C37-54 | BLK | Throttle position sensor (main) signal | 0.72 – 1.04 V | Ignition switch turned ON and accelerator pedal at idle position after warmed up engine. | — |
| | | | 3.67 – 4.25 V | Ignition switch turned ON and accelerator pedal at full depressed position after warmed up engine. | |
| C37-55 | RED/ WHT | Manifold absolute pressure (MAP) sensor signal | Approx. 4 V ("Reference waveform No.24: " | Ignition switch turned ON with barometric pressure at 100 kPa, 760 mmHg. | — |
| | | | 0.4 – 2.0 V ("Reference waveform No.25: " | While engine running at specified idle speed after warmed up with barometric pressure at 100 kPa, 760 mmHg. | |
| C37-56 | WHT | Knock sensor signal | 2 – 3 V ("Reference waveform No.26: " and "Reference waveform No.27: ") | Ignition switch turned ON. | — |
| | | | | Engine running at 4000 r/ min. after warmed up. | |
| C37-57 | GRY/ GRN | Ground for sensors | Below 0.3 V | Ignition switch turned ON. | — |
| C37-58 | BLK/ YEL | Ground for ECM | Below 0.3 V | Ignition switch turned ON. | — |
| C37-59 | BRN/ YEL | Oil control valve ground (for M16 engine) | Below 1.3 V | Ignition switch turned ON. | — |

www.cargeek.ir

www.CarGeek.ir

| Terminal No. | Wire color | Circuit | Normal voltage | Condition | Remarks |
|---|---|---|---|---|---|
| C37-60 | BRN/ WHT | Oil control valve output (for M16 engine) | *0 – 0.6 V<br>↑↓<br>10 – 14 V<br>(“Reference waveform No.28: ” and “Reference waveform No.29: ”) | At the moment of ignition switch turned ON. | Output signal is active high pulse. Duty ratio varies depending on vehicle condition. |

| Terminal No. | Wire color | Circuit | Normal voltage | Condition | Remarks |
|---|---|---|---|---|---|
| E23-1 | BLU/ BLK | Main power supply | 10 – 14 V | Ignition switch turned ON. | — |
| E23-2 | WHT | Power source for ECM internal memory | 10 – 14 V | Ignition switch turned ON. | — |
| E23-3 | — | — | — | — | — |
| E23-4 | WHT/ RED | CAN (high) communication line (active high signal) to ABS hydraulic unit / control module assembly | *2.5 – 4.5 V (“Reference waveform No.30: ”) | Ignition switch turned ON with engine at stop. | CAN communication line signal is pulse. Pulse signal displayed with a regular frequency which varies depending on engine condition. |
| E23-5 | PPL/ WHT | Serial communication line of data link connector 12 V | 8 – 14 V | Ignition switch turned ON. | — |
| E23-6 | BLK/ WHT | Cruise control main switch signal (if equipped with cruise control system) | 10 – 14 V | Ignition switch turned ON, cruise control main switch to ON position. (cruise control main switch is kept in push) | — |
| E23-7 | BLU | Clutch pedal position switch signal (for M/T model, if equipped with cruise control system) | 4 – 6 V | Ignition switch turned ON, clutch pedal not depressed. | — |
| | | | 0 – 1 V | Ignition switch turned ON, clutch pedal full depressed. | |
| E23-8 | YEL/ GRN | Brake pedal position switch signal (if equipped with cruise control system) | 10 – 14 V | Ignition switch turned ON, stop lamp not lit up. | — |
| | | | 0 – 1 V | Ignition switch turned ON, stop lamp lit up. | |
| E23-9 | — | — | — | — | — |
| E23-10 | — | — | — | — | — |
| E23-11 | — | — | — | — | — |
| E23-12 | YEL | Diagnosis switch terminal (if equipped) | 4 – 5 V | Ignition switch turned ON. | — |
| E23-13 | PNK/ BLU | Clock signal for immobilizer coil antenna (if equipped) | 10 – 14 V | Ignition switch turned ON. | — |
| E23-14 | — | — | — | — | — |

www.cargeek.ir

www.CarGeek.ir


| Terminal No. | Wire color | Circuit | Normal voltage | Condition | Remarks |
|---|---|---|---|---|---|
| E23-15 | WHT/ GRN | Fuel pump relay output | 0 – 2.5 V | For 2 sec. from the time ignition switch is turned ON or while engine is running. | — |
| | | | 10 – 14 V | On and after 2 sec. from the time ignition switch is turned ON or while engine is at stop. | |
| E23-16 | BLU/ BLK | Main power supply | 10 – 14 V | Ignition switch turned ON. | — |
| E23-17 | GRN | Power supply of throttle actuator drive circuit | 10 – 14 V | Ignition switch turned ON. | — |
| E23-18 | — | — | — | — | — |
| E23-19 | WHT/ BLU | CAN (low) communication line (active low signal) to ABS hydraulic unit / control module assembly | *0.5 – 2.5 V (“Reference waveform No.30: ”) | Ignition switch turned ON with engine stop. | CAN communication line signal is pulse. Pulse signal displayed with a regular frequency which varies depending on engine condition. |
| E23-20 | GRN/ WHT | Stop lamp switch signal | 0 – 1 V | Ignition switch turned ON, stop lamp not lit up. | — |
| | | | 10 – 14 V | Ignition switch turned ON, stop lamp lit up. | |
| E23-21 | BLK/ YEL | Cruise control command switch ground (if equipped with cruise control system) | Below 1.3 V | Ignition switch turned ON. | — |
| E23-22 | LT GRN | Cruise control command switch signal (if equipped with cruise control system) | 4 – 6 V | Ignition switch turned ON. | — |
| E23-23 | — | — | — | — | — |
| E23-24 | YEL/ RED | Fuel level sensor signal | 0 – 6 V | Ignition switch turned ON. Voltage varies depends on fuel level. | — |
| E23-25 | — | — | — | — | — |
| E23-26 | — | — | — | — | — |
| E23-27 | — | — | — | — | — |
| E23-28 | GRY/ BLU | Serial communication line for immobilizer coil antenna (if equipped) | 10 – 14 V | Ignition switch turned ON. | — |
| E23-29 | BLK/ WHT | Ignition switch signal | 0 – 1 V | Ignition switch turned OFF. | — |
| | | | 10 – 14 V | Ignition switch turned ON. | |
| E23-30 | — | — | — | — | — |
| E23-31 | — | — | — | — | — |
| E23-32 | — | — | — | — | — |
| E23-33 | — | — | — | — | — |
| E23-34 | — | — | — | — | — |
| E23-35 | — | — | — | — | — |
| E23-36 | — | — | — | — | — |
| E23-37 | — | — | — | — | — |
| E23-38 | — | — | — | — | — |
| E23-39 | — | — | — | — | — |

www.cargeek.ir

www.CarGeek.ir

| Terminal No. | Wire color | Circuit | Normal voltage | Condition | Remarks |
|---|---|---|---|---|---|
| E23-40 | — | — | — | — | — |
| E23-41 | — | — | — | — | — |
| E23-42 | — | — | — | — | — |
| E23-43 | — | — | — | — | — |
| E23-44 | — | — | — | — | — |
| E23-45 | — | — | — | — | — |
| E23-46 | RED/ BLK | Radiator cooling fan relay No.1 output | 10 – 14 V | Ignition switch turned ON, engine coolant temp.: below 95 °C (203 °F), or A/C refrigerant pressure: below 300 kPa (43.5 psi) with A/C switch turned on while engine is running. | — |
| | | | 0 – 2 V | Ignition switch turned ON, engine coolant temp.: 97.5 °C (207.5 °F) or higher, or A/C refrigerant pressure: 340 kPa (49.3 psi) or higher with A/C switch turned on while engine is running. | |
| E23-47 | RED | Radiator cooling fan relay No.2 output | 10 – 14 V | Ignition switch turned ON, engine coolant temp.: below 100 °C (212 °F), or A/C refrigerant pressure: below 1300 kPa (188.5 psi) with A/C switch turned on while engine is running. | — |
| | | | 0 – 2 V | Ignition switch turned ON, engine coolant temp.: 102.5 °C (216.5 °F) or higher, or A/C refrigerant pressure: 1600 kPa (232 psi) or higher with A/C switch turned on while engine is running. | |
| E23-48 | RED/ YEL | Radiator cooling fan relay No.3 output | 10 – 14 V | Ignition switch turned ON, engine coolant temp.: below 100 °C (212 °F), or A/C refrigerant pressure: below 1300 kPa (188.5 psi) with A/C switch turned on while engine is running. | — |
| | | | 0 – 2 V | Ignition switch turned ON, engine coolant temp.: 102.5 °C (216.5 °F) or higher, or A/C refrigerant pressure: 1600 kPa (232 psi) or higher with A/C switch turned on while engine is running. | |
| E23-49 | PNK | A/C compressor relay output (if equipped with A/C) | 10 – 14 V | Engine running, A/C switch OFF and blower selector at OFF position. | — |
| | | | 0 – 1 V | Engine running, A/C switch ON and blower selector at 1st position or more. | |

www.cargeek.ir

www.CarGeek.ir


| Terminal No. | Wire color | Circuit | Normal voltage | Condition | Remarks |
|---|---|---|---|---|---|
| E23-50 | BLU/ ORN | Throttle actuator control relay output | 0 – 1 V | Ignition switch turned ON. | — |
| E23-51 | BLU/ YEL | Ground for accelerator pedal position (APP) sensor (sub) | Below 0.3 V | Ignition switch turned ON. | — |
| E23-52 | BLU/ GRN | Accelerator pedal position (APP) sensor (sub) signal | 0.30 – 0.44 V | Ignition switch turned ON and accelerator pedal at idle position after warmed up engine. | — |
| | | | 1.74 – 2.17 V | Ignition switch turned ON and accelerator pedal at full depressed position after warmed up engine. | |
| E23-53 | ORN/ BLU | Output for 5 V power source of accelerator pedal position (APP) sensor (sub) | 4.5 – 5.5 V | Ignition switch turned ON. | — |
| E23-54 | ORN | Ground for accelerator pedal position (APP) sensor (main) | Below 0.3 V | Ignition switch turned ON. | — |
| E23-55 | WHT/ BLU | Accelerator pedal position (APP) sensor (main) signal | 0.65 – 0.82 V | Ignition switch turned ON and accelerator pedal at idle position after warmed up engine. | — |
| | | | 3.50 – 4.27 V | Ignition switch turned ON and accelerator pedal at full depressed position after warmed up engine. | |
| E23-56 | WHT | Output for 5 V power source of accelerator pedal position (APP) sensor (main) | 4.5 – 5.5 V | Ignition switch turned ON. | — |
| E23-57 | — | — | — | — | — |
| E23-58 | — | — | — | — | — |
| E23-59 | — | — | — | — | — |
| E23-60 | BLU | Main power supply relay output | 10 – 14 V | Ignition switch turned OFF. | — |
| | | | 0 – 2 V | Ignition switch turned ON. | |

www.cargeek.ir

www.CarGeek.ir

**Reference waveform No.1**

Fuel injector signal (1) with engine idling

| | |
|---|---|
| Measurement terminal | CH1: “C37-2” to “C37-58” |
| Oscilloscope setting | CH1: 20 V/DIV<br>TIME: 1 ms/DIV |
| Measurement condition | • After warmed up to normal operating temperature<br>• Engine at specified idle speed |

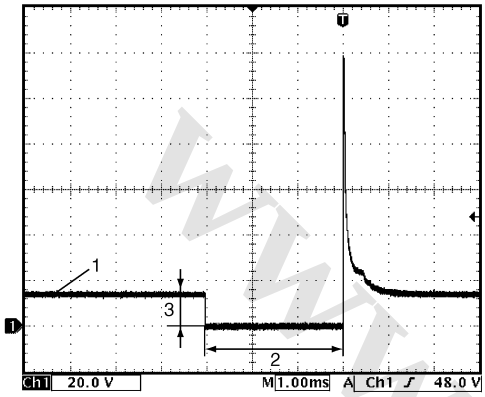


I5JB0A110074-01

| |
|---|
| 2. Fuel injection pulse width: 2-4 msec. |
| 3. 10 – 14 V |

**Reference waveform No.2**

No.1 fuel injector signal (2) with engine idling

| | |
|---|---|
| Measurement terminal | CH1: “C37-52” to “C37-58”<br>CH2: “C37-1” to “C37-58” |
| Oscilloscope setting | CH1: 5 V/DIV, CH2: 20 V/DIV<br>TIME: 40 ms/DIV |
| Measurement condition | • After warmed up to normal operating temperature<br>• Engine at specified idle speed |

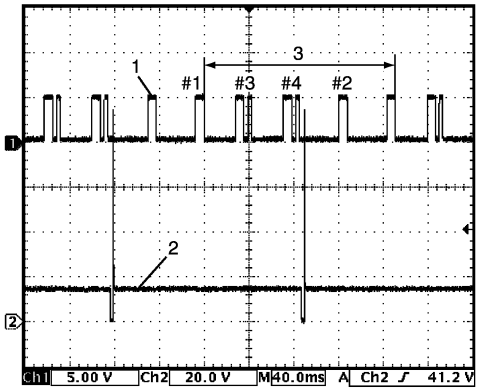


I5JB0A110075-01

| |
|---|
| 1. Cylinder reference signal (CMP reference signal) |
| 3. 720° crank angle |

**Reference waveform No.3**

No.2 fuel injector signal (2) with engine idling

| | |
|---|---|
| Measurement terminal | CH1: “C37-52” to “C37-58”<br>CH2: “C37-2” to “C37-58” |
| Oscilloscope setting | CH1: 5 V/DIV, CH2: 20 V/DIV<br>TIME: 40 ms/DIV |
| Measurement condition | • After warmed up to normal operating temperature<br>• Engine at specified idle speed |

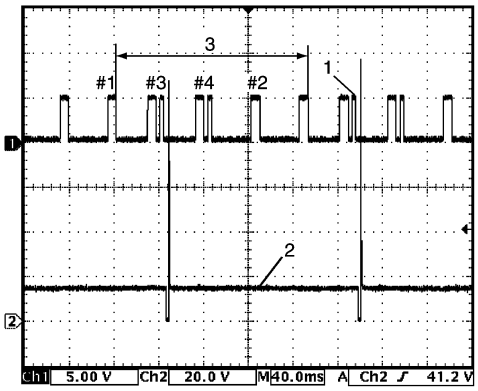


I5JB0A110076-01

| |
|---|
| 1. Cylinder reference signal (CMP reference signal) |
| 3. 720° crank angle |

**Reference waveform No.4**

EGR valve signal

| | |
|---|---|
| Measurement terminal | CH1: “C37-5” to “C37-58”<br>CH2: “C37-6” to “C37-58”<br>CH3: “C37-3” to “C37-58”<br>CH4: “C37-4” to “C37-58” |
| Oscilloscope setting | CH1: 20 V/DIV, CH2: 20 V/DIV<br>CH3: 20 V/DIV, CH4: 20 V/DIV<br>TIME: 40 ms/DIV |
| Measurement condition | Engine at cranking |

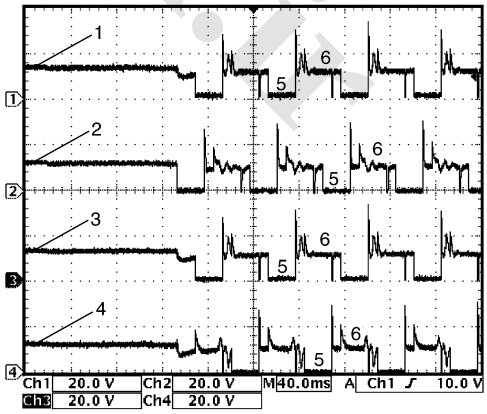


I4RS0B110053-01

| |
|---|
| 1. EGR valve stepper motor coil 1 signal |
| 2. EGR valve stepper motor coil 2 signal |
| 3. EGR valve stepper motor coil 3 signal |
| 4. EGR valve stepper motor coil 4 signal |
| 5. ON signal |
| 6. OFF signal |

www.cargeek.ir

www.CarGeek.ir


**Reference waveform No.5**

Generator field coil monitor signal (1) at engine idling

| | |
|---|---|
| Measurement terminal | CH1: “C37-8” to “C37-58”<br>CH2: “C37-28” to “C37-58” |
| Oscilloscope setting | CH1: 5 V/DIV, CH2: 5 V/DIV<br>TIME: 20 ms/DIV |
| Measurement condition | • After warmed up to normal operating temperature<br>• Engine at specified idle speed<br>• All accessory switch turned off |

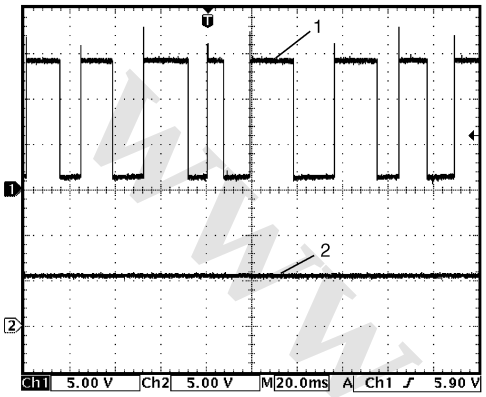


I5JB0A110077-01

| |
|---|
| 2. Generator output control signal |

**Reference waveform No.6**

Generator field coil monitor signal (1) at engine idling

| | |
|---|---|
| Measurement terminal | CH1: “C37-8” to “C37-58”<br>CH2: “C37-28” to “C37-58” |
| Oscilloscope setting | CH1: 5 V/DIV, CH2: 5 V/DIV<br>TIME: 20 ms/DIV |
| Measurement condition | • After warmed up to normal operating temperature<br>• Engine at specified idle speed<br>• For a few sec. from headlight switch turned ON |

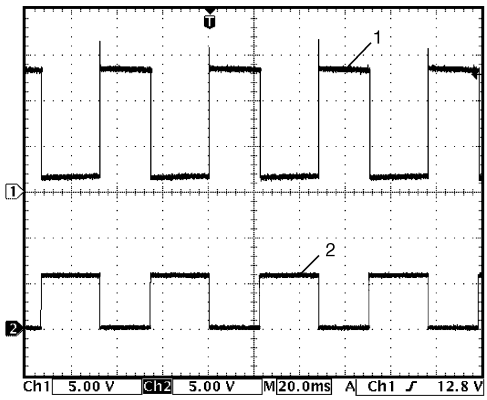


I5JB0A110078-01

| |
|---|
| 2. Generator output control signal |

**Reference waveform No.7**

Heated oxygen sensor-2 signal (1) with engine idling

| | |
|---|---|
| Measurement terminal | CH1: “C37-11” to “C37-57”<br>CH2: “C37-47” to “C37-58” |
| Oscilloscope setting | CH1: 200 mV/DIV, CH2: 10 V/DIV<br>TIME: 200 ms/DIV |
| Measurement condition | • After warmed up to normal operating temperature<br>• Engine at specified idle speed |

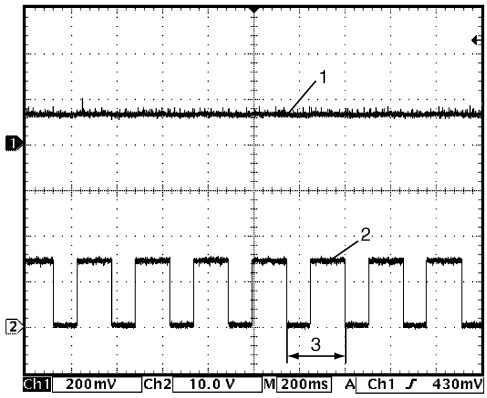


I5JB0A110079-01

| |
|---|
| 2. Heated oxygen sensor-2 heater signal |
| 3. One duty cycle |

**Reference waveform No.8**

Heated oxygen sensor-2 signal (1) with engine racing

| | |
|---|---|
| Measurement terminal | CH1: “C37-11” to “C37-57”<br>CH2: “C37-47” to “C37-58” |
| Oscilloscope setting | CH1: 500 mV/DIV, CH2: 10 V/DIV<br>TIME: 200 ms/DIV |
| Measurement condition | • After warmed up to normal operating temperature<br>• Engine racing |

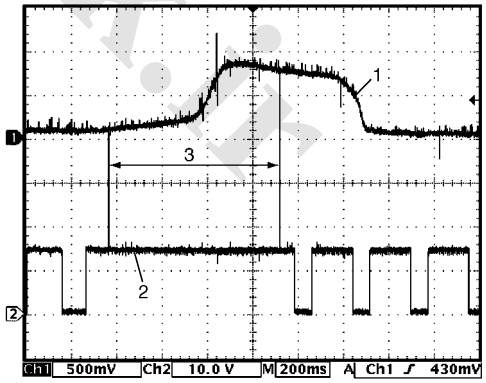


I5JB0A110080-03

| |
|---|
| 2. Heated oxygen sensor-2 heater signal |
| 3. Engine racing |

www.cargeek.ir

www.CarGeek.ir

**Reference waveform No.9**

EVAP canister purge valve signal

| | |
|---|---|
| Measurement terminal | CH1: “C37-13” to “C37-58” |
| Oscilloscope setting | CH1: 10 V/DIV<br>TIME: 40 ms/DIV |
| Measurement condition | • After warmed up to normal operating temperature<br>• Set EVAP canister purge valve at 52% by using “Misc Test” of scan tool |

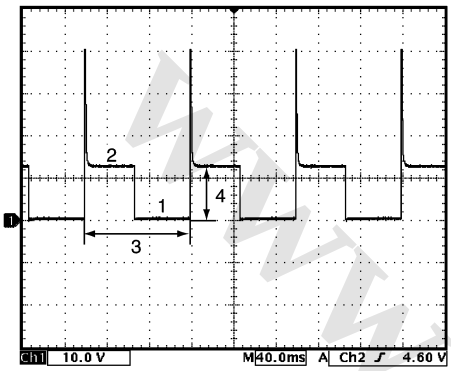


I4RS0B110067-01

| | |
|---|---|
| 1. | ON signal |
| 2. | OFF signal |
| 3. | One duty cycle |
| 4. | 10 – 14 V |

**Reference waveform No.10**

No.3 fuel injector signal (2) with engine idling

| | |
|---|---|
| Measurement terminal | CH1: “C37-52” to “C37-58”<br>CH2: “C37-16” to “C37-58” |
| Oscilloscope setting | CH1: 5 V/DIV, CH2: 20 V/DIV<br>TIME: 40 ms/DIV |
| Measurement condition | • After warmed up to normal operating temperature<br>• Engine at specified idle speed |

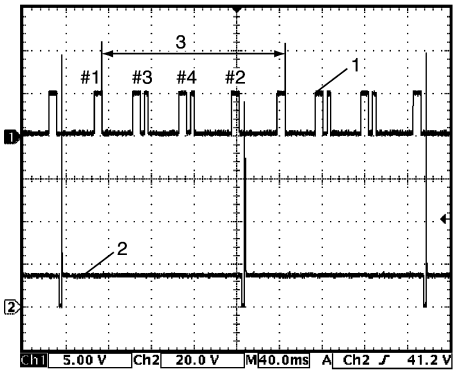


I5JB0A110081-01

| | |
|---|---|
| 1. | Cylinder reference signal (CMP reference signal) |
| 3. | 720° crank angle |

**Reference waveform No.11**

No.4 fuel injector signal (2) with engine idling

| | |
|---|---|
| Measurement terminal | CH1: “C37-52” to “C37-58”<br>CH2: “C37-17” to “C37-58” |
| Oscilloscope setting | CH1: 5 V/DIV, CH2: 20 V/DIV<br>TIME: 40 ms/DIV |
| Measurement condition | • After warmed up to normal operating temperature<br>• Engine at specified idle speed |

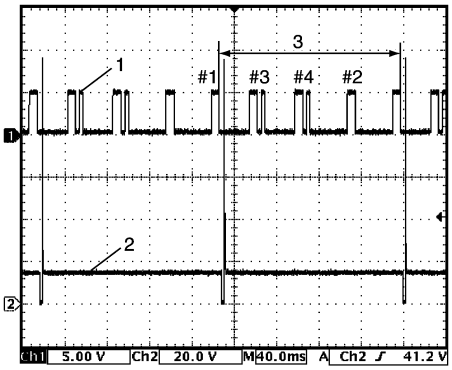


I5JB0A110082-01

| | |
|---|---|
| 1. | Cylinder reference signal (CMP reference signal) |
| 3. | 720° crank angle |

www.cargeek.ir

www.CarGeek.ir


**Reference waveform No.12**

Ignition coil signal (1) with engine idling

| | |
|---|---|
| Measurement terminal | CH1: “C37-20” to “C37-58” |
| Oscilloscope setting | CH1: 2 V/DIV<br>TIME: 2 ms/DIV |
| Measurement condition | • After warmed up to normal operating temperature<br>• Engine at specified idle speed |

[A]

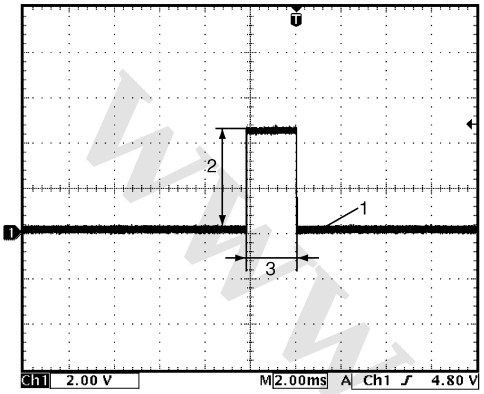


[B]

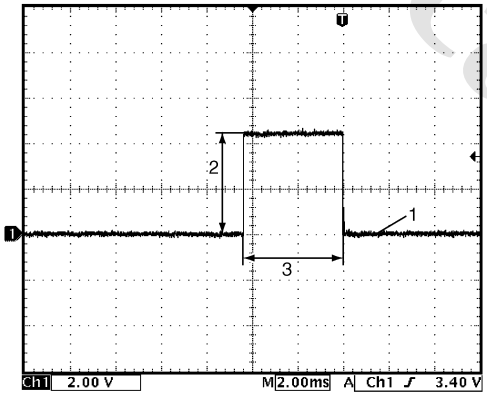


I5JB0A110083-02

| | |
|---|---|
| [A]: | For J20 engine |
| [B]: | For M16 engine |
| 1. | 4 – 6 V |
| 3. | Ignition coil pulse width |

**Reference waveform No.13**

Ignition coil No.4 signal (2) with engine idling (for J20 engine)

| | |
|---|---|
| Measurement terminal | CH1: “C37-52” to “C37-58”<br>CH2: “C37-18” to “C37-58” |
| Oscilloscope setting | CH1: 2 V/DIV, CH2: 2 V/DIV<br>TIME: 40 ms/DIV |
| Measurement condition | • After warmed up to normal operating temperature<br>• Engine at specified idle speed |

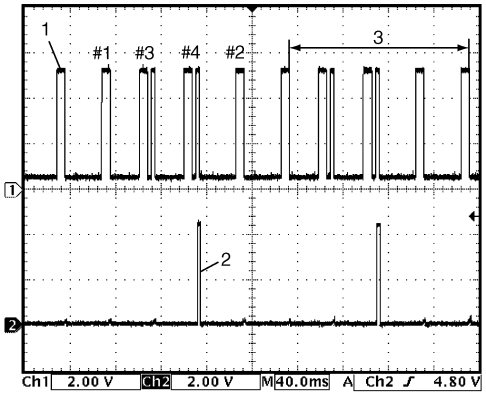


I5JB0A110084-01

| | |
|---|---|
| 1. | Cylinder reference signal (CMP reference signal) |
| 3. | 720° crank angle |

**Reference waveform No.14**

Ignition coil No.3 signal (2) with engine idling (for J20 engine)

| | |
|---|---|
| Measurement terminal | CH1: “C37-52” to “C37-58”<br>CH2: “C37-19” to “C37-58” |
| Oscilloscope setting | CH1: 2 V/DIV, CH2: 2 V/DIV<br>TIME: 40 ms/DIV |
| Measurement condition | • After warmed up to normal operating temperature<br>• Engine at specified idle speed |

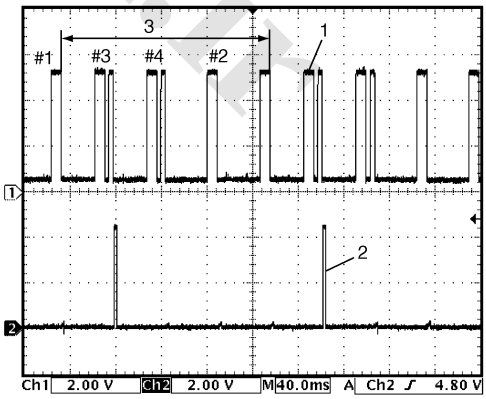


I5JB0A110085-01

| | |
|---|---|
| 1. | Cylinder reference signal (CMP reference signal) |
| 3. | 720° crank angle |

www.cargeek.ir

www.CarGeek.ir

### Reference waveform No.15

- Ignition coil No.2 signal (1) with engine idling (for J20 engine)
- Ignition coil No.2 and No.3 signal (2) with engine idling (for M16 engine)

| | |
|---|---|
| Measurement terminal | CH1: “C37-52” to “C37-58”<br>CH2: “C37-20” to “C37-58” |
| Oscilloscope setting | CH1: 2 V/DIV, CH2: 2 V/DIV<br>TIME: 40 ms/DIV |
| Measurement condition | • After warmed up to normal operating temperature<br>• Engine at specified idle speed |

[A]

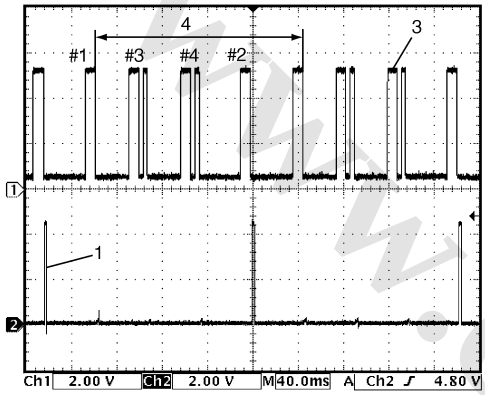


[B]

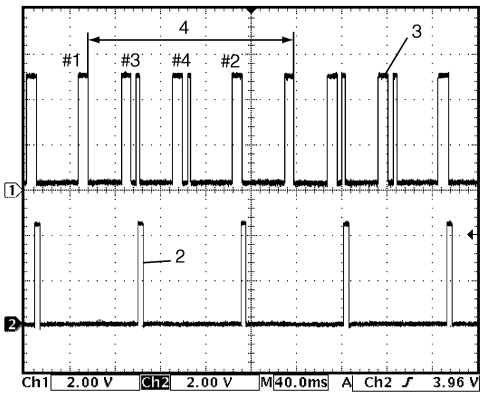


I5JB0A110086-01

| | |
|---|---|
| [A]: | For J20 engine |
| [B]: | For M16 engine |
| 3. | Cylinder reference signal (CMP reference signal) |
| 4. | 720° crank angle |

### Reference waveform No.16

- Ignition coil No.1 signal (1) with engine idling (for J20 engine)
- Ignition coil No.1 and No.4 signal (2) with engine idling (for M16 engine)

| | |
|---|---|
| Measurement terminal | CH1: “C37-52” to “C37-58”<br>CH2: “C37-21” to “C37-58” |
| Oscilloscope setting | CH1: 2 V/DIV, CH2: 2 V/DIV<br>TIME: 40 ms/DIV |
| Measurement condition | • After warmed up to normal operating temperature<br>• Engine at specified idle speed |

[A]

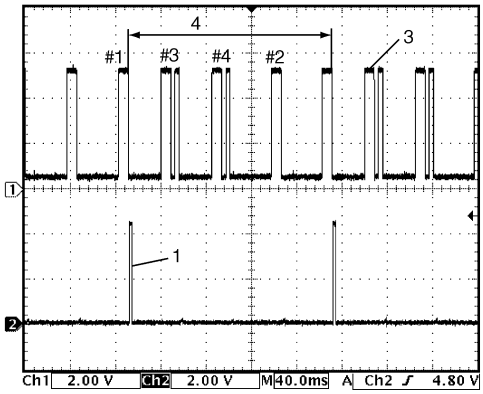


[B]

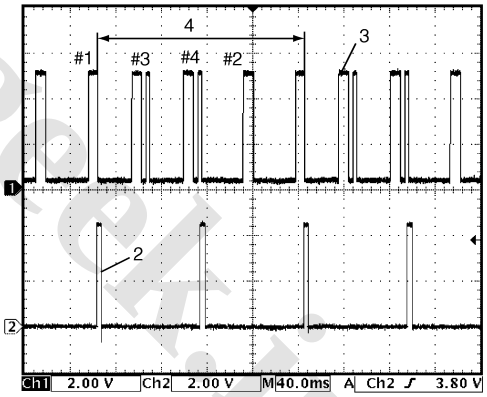


I5JB0A110087-02

| | |
|---|---|
| [A]: | For J20 engine |
| [B]: | For M16 engine |
| 3. | Cylinder reference signal (CMP reference signal) |
| 4. | 720° crank angle |

www.cargeek.ir

www.CarGeek.ir


**Reference waveform No.17**

Mass air flow sensor signal (1) with engine racing

| | |
|---|---|
| Measurement terminal | CH1: “C37-26” to “C37-27”<br>CH2: “C37-54” to “C37-41” |
| Oscilloscope setting | CH1: 1 V/DIV, CH2: 1 V/DIV<br>TIME: 200 ms/DIV |
| Measurement condition | • After warmed up to normal operating temperature<br>• Engine racing |

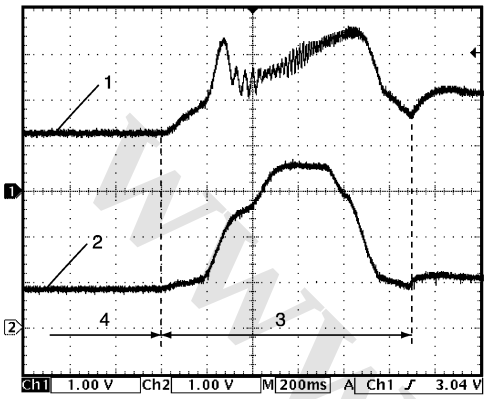


I5JB0A110088-02

| | |
|---|---|
| 2. | Throttle position sensor (main) signal |
| 3. | Racing |
| 4. | Idle |

**Reference waveform No.18**

A/F sensor signal with engine idling

| | |
|---|---|
| Measurement terminal | CH1: “C37-38” to “C37-58”<br>CH2: “C37-37” to “C37-58”<br>CH3: “C37-32” to “C37-31” |
| Oscilloscope setting | CH1: 500 mV/DIV, CH2: 500 mV/DIV, CH3: 10 V/DIV<br>TIME: 100 ms/DIV |
| Measurement condition | • After warmed up to normal operating temperature<br>• Engine at specified idle speed |

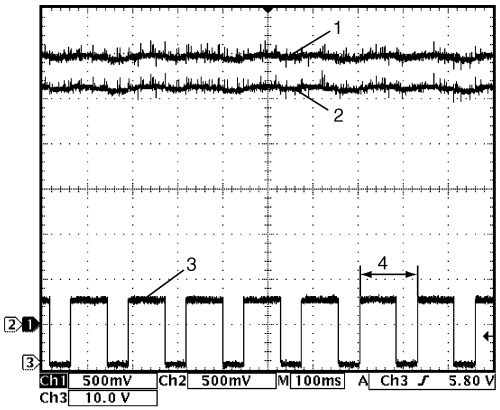


I5JB0A110089-01

| | |
|---|---|
| 1. | A/F sensor signal (+) |
| 2. | A/F sensor signal (–) |
| 3. | A/F sensor heater signal |
| 4. | One duty cycle |

**Reference waveform No.19**

Intake manifold tuning vacuum solenoid valve signal with engine racing (for J20 engine)

| | |
|---|---|
| Measurement terminal | CH1: “C37-33” to “C37-58”<br>CH2: “C37-54” to “C37-41” |
| Oscilloscope setting | CH1: 10 V/DIV, CH2: 2 V/DIV<br>TIME: 200 ms/DIV |
| Measurement condition | • After warmed up to normal operating temperature<br>• Engine racing |

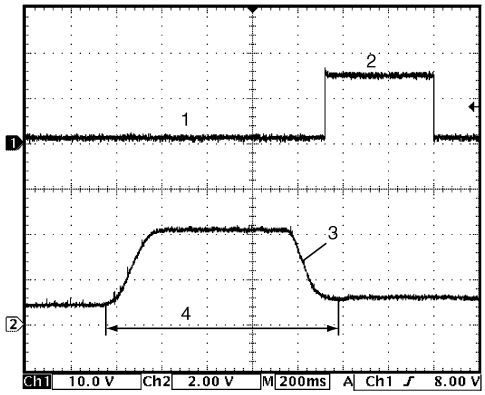


I5JB0A110090-02

| | |
|---|---|
| 1. | ON signal (IMT valve closed) |
| 2. | OFF signal (IMT valve opened) |
| 3. | Throttle position sensor (main) signal |
| 4. | Racing |

www.cargeek.ir

www.CarGeek.ir

**Reference waveform No.20**

CMP sensor signal with engine idling

| | |
|---|---|
| Measurement terminal | CH1: “C37-52” to “C37-58”<br>CH2: “C37-51” to “C37-36” (for J20 engine), “C37-58” (for M16 engine) |
| Oscilloscope setting | CH1: 2 V/DIV, CH2: 2 V/DIV<br>TIME: 20 ms/DIV |
| Measurement condition | • After warmed up to normal operating temperature<br>• Engine at specified idle speed |

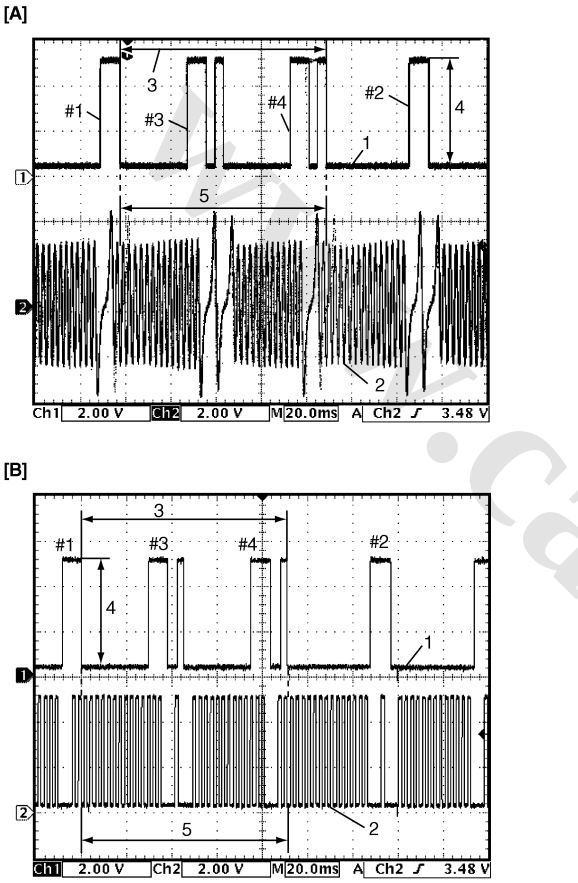


I5JB0A110091-01

| | |
|---|---|
| [A]: | For J20 engine |
| [B]: | For M16 engine |
| 1. | Cylinder reference signal (CMP reference signal) |
| 2. | CKP signal |
| 3. | 360° crank angle |
| 4. | 4 – 5 V |
| 5. | 36 – 6 = 30 CKP pulse |

**Reference waveform No.21**

CMP sensor signal with engine idling

| | |
|---|---|
| Measurement terminal | CH1: “C37-52” to “C37-58”<br>CH2: “C37-51” to “C37-36” (for J20 engine), “C37-58” (for M16 engine) |
| Oscilloscope setting | CH1: 2 V/DIV, CH2: 2 V/DIV<br>TIME: 10 ms/DIV |
| Measurement condition | • After warmed up to normal operating temperature<br>• Engine at specified idle speed |

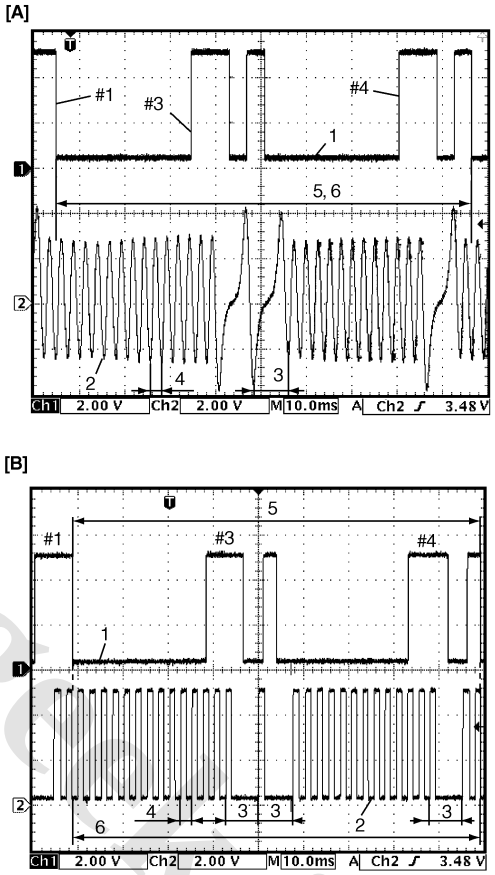


I5JB0A110092-02

| | |
|---|---|
| [A]: | For J20 engine |
| [B]: | For M16 engine |
| 1. | Cylinder reference signal (CMP reference signal) |
| 2. | CKP signal |
| 3. | 30° crank angle |
| 4. | 10° crank angle |
| 5. | 360° crank angle |
| 6. | 36 – 6 = 30 CKP pulse |

www.cargeek.ir

www.CarGeek.ir


**Reference waveform No.22**

Throttle actuator output signal with ignition switch turned ON

| | |
|---|---|
| Measurement terminal | CH1: “C37-45” to “C37-58”<br>CH2: “C37-44” to “C37-58” |
| Oscilloscope setting | CH1: 5 V/DIV, CH2: 5 V/DIV<br>TIME: 2 ms/DIV |
| Measurement condition | • After warmed up to normal operating temperature<br>• Ignition switch turned ON and accelerator pedal at idle position |

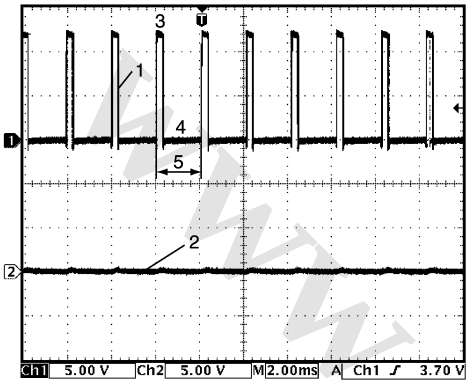


I4RS0B110081-02

| | |
|---|---|
| 1. | Throttle actuator drive signal (“C37-45” terminal) |
| 2. | Throttle actuator drive signal (“C37-44” terminal) |
| 3. | ON signal |
| 4. | OFF signal |
| 5. | One duty cycle |

**Reference waveform No.23**

Throttle actuator output signal with ignition switch turned ON

| | |
|---|---|
| Measurement terminal | CH1: “C37-45” to “C37-58”<br>CH2: “C37-44” to “C37-58” |
| Oscilloscope setting | CH1: 5 V/DIV, CH2: 5 V/DIV<br>TIME: 2 ms/DIV |
| Measurement condition | • After warmed up to normal operating temperature<br>• Ignition switch turned ON and accelerator pedal at full depressed position |

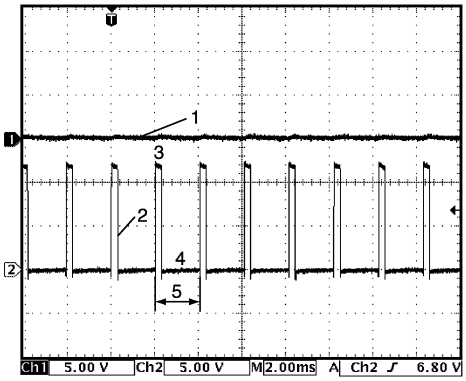


I4RS0B110082-02

| | |
|---|---|
| 1. | Throttle actuator drive signal (“C37-45” terminal) |
| 2. | Throttle actuator drive signal (“C37-44” terminal) |
| 3. | ON signal |
| 4. | OFF signal |
| 5. | One duty cycle |

**Reference waveform No.24**

Manifold absolute pressure sensor signal (1) with ignition switch turned ON

| | |
|---|---|
| Measurement terminal | CH1: “C37-55” to “C37-57”<br>CH2: “C37-54” to “C37-41” |
| Oscilloscope setting | CH1: 2 V/DIV, CH2: 1 V/DIV<br>TIME: 200 ms/DIV |
| Measurement condition | • After warmed up to normal operating temperature<br>• Ignition switch turned ON |

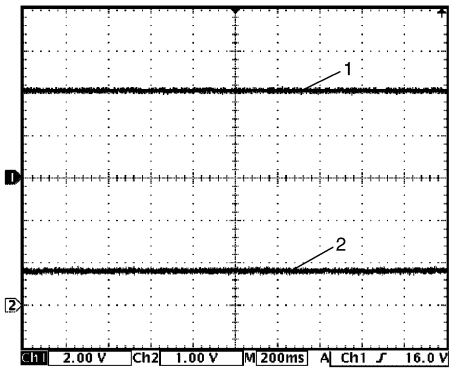


I4RS0B110070-01

| | |
|---|---|
| 2. | Throttle position sensor (main) signal |

www.cargeek.ir

www.CarGeek.ir

**Reference waveform No.25**

Manifold absolute pressure sensor signal (1) with engine racing

| | |
|---|---|
| Measurement terminal | CH1: “C37-55” to “C37-57”<br>CH2: “C37-54” to “C37-41” |
| Oscilloscope setting | CH1: 2 V/DIV, CH2: 2 V/DIV<br>TIME: 200 ms/DIV |
| Measurement condition | • After warmed up to normal operating temperature<br>• Engine racing |

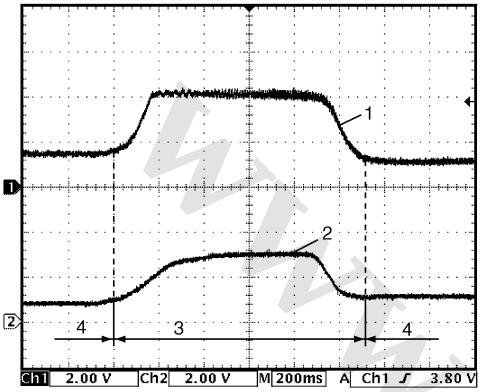


I5JB0A110093-01

| | |
|---|---|
| 2. | Throttle position sensor (main) signal |
| 3. | Racing |
| 4. | Idle |

**Reference waveform No.26**

Knock sensor signal at engine speed 4000 r/min.

| | |
|---|---|
| Measurement terminal | CH1: “C37-56” to “C37-58” |
| Oscilloscope setting | CH1: 1 V/DIV<br>TIME: 10 ms/DIV |
| Measurement condition | • After warmed up to normal operating temperature<br>• Run engine at 4000 r/min. |

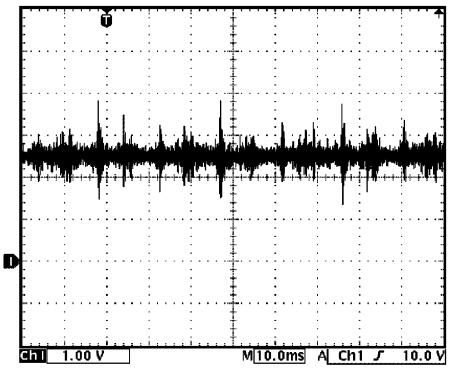


I4RS0B110072-01

**Reference waveform No.27**

Knock sensor signal at engine speed 4000 r/min.

| | |
|---|---|
| Measurement terminal | CH1: “C37-56” to “C37-58” |
| Oscilloscope setting | CH1: 1 V/DIV<br>TIME: 200 μs/DIV |
| Measurement condition | • After warmed up to normal operating temperature<br>• Run engine at 4000 r/min. |

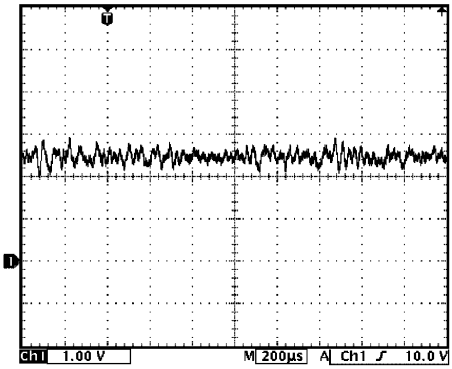


I4RS0B110073-01

**Reference waveform No.28**

Oil control valve signal with engine idling (for M16 engine)

| | |
|---|---|
| Measurement terminal | CH1: “C37-60” to “C37-59” |
| Oscilloscope setting | CH1: 5 V/DIV<br>TIME: 2 ms/DIV |
| Measurement condition | At the moment of the ignition switch turned on |

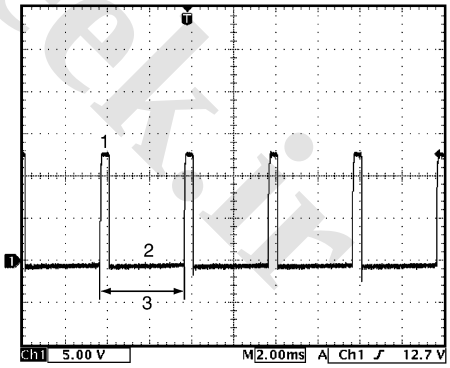


I4RS0B110074-01

| | |
|---|---|
| 1. | ON signal |
| 2. | OFF signal |
| 3. | Only duty cycle |

www.cargeek.ir

www.CarGeek.ir


**Reference waveform No.29**

Oil control valve signal with engine racing (for M16 engine)

| | |
|---|---|
| Measurement terminal | CH1: “C37-60” to “C37-59” |
| Oscilloscope setting | CH1: 5 V/DIV<br>TIME: 400 μs/DIV |
| Measurement condition | • After warmed up to normal operating temperature<br>• Drive vehicle at 20 km/h (12 mph) and depress accelerator pedal fully |

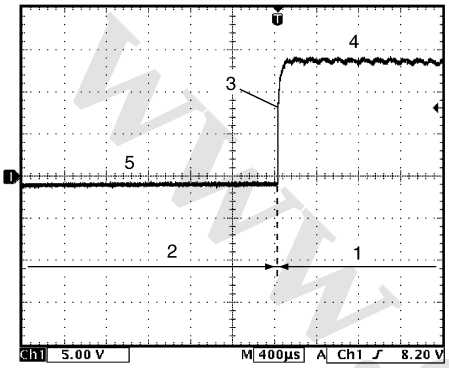


I4RS0B110075-01

| | |
|---|---|
| 1. | Accelerator pedal depressed fully |
| 2. | Accelerator pedal depressed partially |
| 3. | Oil control valve signal |
| 4. | ON signal |
| 5. | OFF signal |

**Reference waveform No.30**

CAN communication line signal with ignition switch turned ON

| | |
|---|---|
| Measurement terminal | CH1: “E23-4” to “C37-58”<br>CH2: “E23-19” to “C37-58” |
| Oscilloscope setting | CH1: 1 V/DIV, CH2: 1 V/DIV<br>TIME: 40 μs/DIV |
| Measurement condition | Ignition switch turned ON<br>(Signal pattern is depending on communication data) |

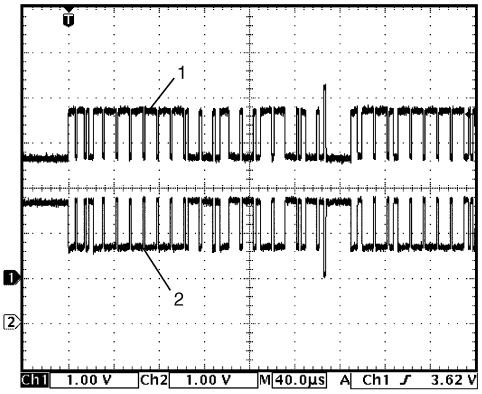


I5JB0A110094-01

| | |
|---|---|
| 1. | CAN communication line signal (High) |
| 2. | CAN communication line signal (Low) |

**Reference waveform No.31**

Ignition coil signal and fuel injector signal with engine cranking

| | |
|---|---|
| Measurement terminal | CH1: “C37-52” to “C37-58”<br>CH2: “C37-21” to “C37-58”<br>CH3: “C37-1” to “C37-58”<br>CH4: “C37-22” to “C37-58” |
| Oscilloscope setting | CH1: 5 V/DIV, CH2: 5 V/DIV<br>CH3: 50 V/DIV, CH4: 10 V/DIV<br>TIME: 200 ms/DIV |
| Measurement condition | • After warmed up to normal operating temperature<br>• Engine at cranking |

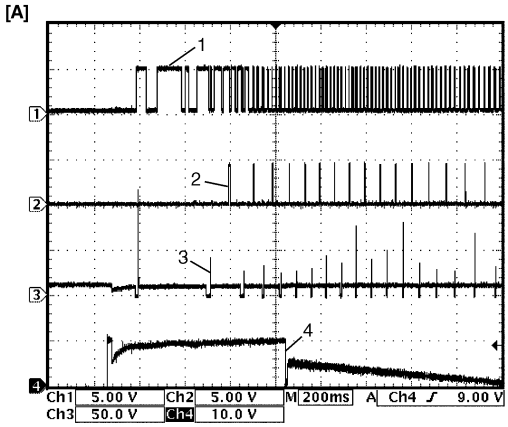


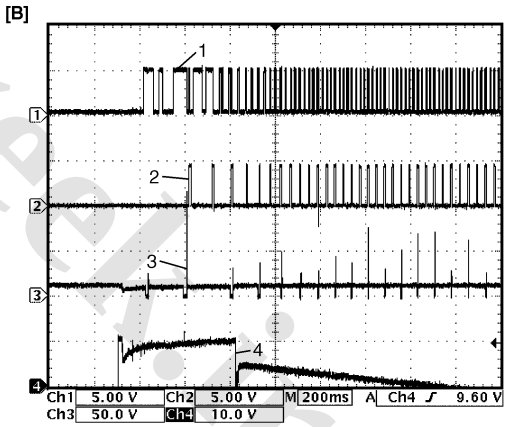


I5JB0A110095-01

| | |
|---|---|
| [A]: | For J20 engine |
| [B]: | For M16 engine |
| 1. | Cylinder reference signal (CMP reference signal) |
| 2. | Ignition coil signal |
| 3. | No.1 fuel injector signal |
| 4. | Engine start signal |

www.cargeek.ir

www.CarGeek.ir

**Resistance Check**

1) Remove ECM from its bracket referring to “Engine Control Module (ECM) Removal and Installation: in Section 1C”.

**⚠ CAUTION**

**Never touch terminals of ECM itself or connect voltmeter or ohmmeter (2).**

2) Connect special tool to ECM connectors securely.

**NOTE**

**Do not connect the other connector of special tool to ECM.**

3) Check resistance between each pair of terminals of disconnected connectors (1) as listed in the following table.

**⚠ CAUTION**

- **Be sure to connect ohmmeter probe from wire harness side of coupler.**
- **Be sure to turn OFF ignition switch for this check.**
- **Resistance in the following table represents that measured when parts temperature is 20 °C (68 °F).**

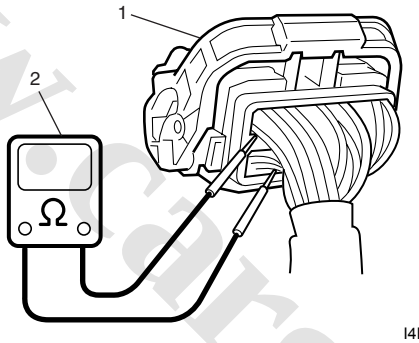


I4RS0A110086-02

| Terminals | Circuit | Standard resistance | Condition |
|---|---|---|---|
| E23-60 to E23-29 | Main relay | 160 – 240 Ω | Battery disconnected and ignition switch turned ON |
| E23-15 to E23-29 | Fuel pump relay | 160 – 240 Ω | — |
| C37-16 to E23-1/16 | No.3 fuel injector | 10.8 – 18.2 Ω | — |
| C37-17 to E23-1/16 | No.4 fuel injector | | |
| C37-5 to E23-1/16 | EGR valve (stepping motor No.1 coil) | 20 – 31 Ω | — |
| C37-13 to E23-1/16 | EVAP canister purge valve | 28 – 35 Ω | — |
| C37-2 to E23-1/16 | No.2 fuel injector | 10.8 – 18.2 Ω | — |
| C37-6 to E23-1/16 | EGR valve (stepping motor No.2 coil) | 20 – 31 Ω | — |
| C37-3 to E23-1/16 | EGR valve (stepping motor No.4 coil) | | |
| C37-4 to E23-1/16 | EGR valve (stepping motor No.3 coil) | | |
| C37-1 to E23-1/16 | No.1 fuel injector | 10.8 – 18.2 Ω | — |
| C37-33 to E23-1/16 | Intake manifold tuning vacuum solenoid valve | 33 – 45 Ω | — |
| C37-60 to C37-59 | Oil control valve (for M16 engine) | 6 – 15 Ω | — |
| E23-50 to E23-1/16 | Throttle actuator control relay | 160 – 240 Ω | — |

www.cargeek.ir

www.CarGeek.ir


## ECM Power and Ground Circuit Check

S5JB0A1104064

### Wiring Diagram

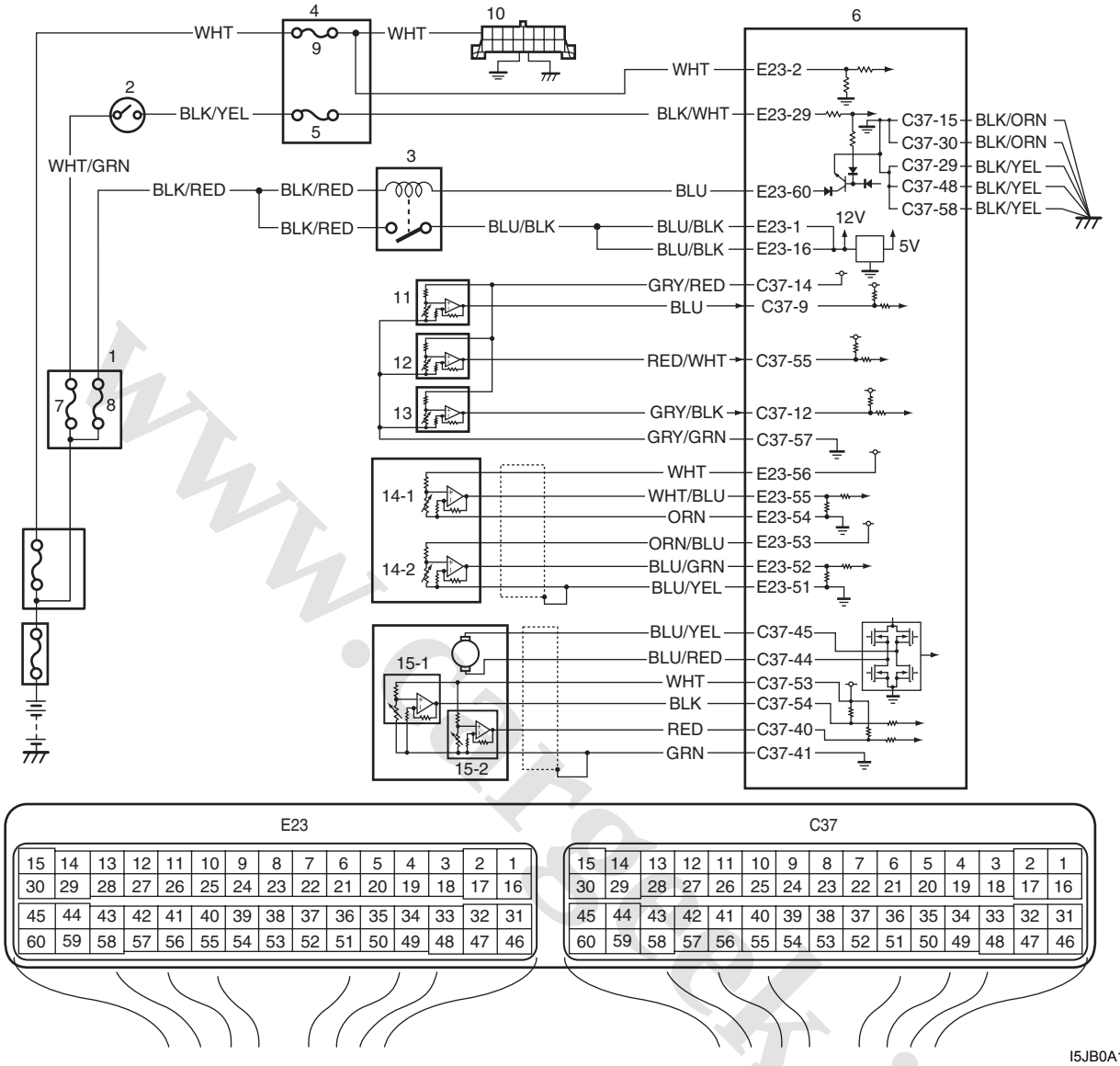


I5JB0A110096-01

| | | | |
|---|---|---|---|
| 1. Fuse box No.2 | 6. ECM | 11. Electric load current sensor (for J20 engine) | 15-1. TP sensor (main) |
| 2. Ignition switch | 7. “IG ACC” fuse | 12. MAP sensor | 15-2. TP sensor (sub) (for AMT model) |
| 3. Main relay | 8. “FI” fuse | 13. A/C refrigerant pressure sensor (if equipped with A/C) | |
| 4. Junction block | 9. “DOME” fuse | 14-1. Accelerator pedal position (APP) sensor (main) | |
| 5. “IG COIL” fuse | 10. DLC | 14-2. Accelerator pedal position (APP) sensor (sub) | |

www.cargeek.ir

www.CarGeek.ir

**Circuit Description**

When the ignition switch is turned ON, the main relay turns ON (the contact point closes) and the main power is supplied to ECM. And then ECM supplies 5 V power to each sensor (electric load current sensor (for J20 engine), MAP sensor, A/C refrigerant pressure sensor, APP sensor and TP sensor).
If 5 V power circuit to each sensors from ECM is shorted to ground, ECM stops engine and emission control operation.

**Troubleshooting**

**NOTE**

- **Before performed troubleshooting, be sure to read the "Precautions of ECM Circuit Inspection: ".**
- **When measuring circuit voltage, resistance and/or pulse signal at ECM connector, connect the special tool to ECM and/or the ECM connectors referring to "Inspection of ECM and Its Circuits: ".**

| Step | Action | Yes | No |
|---|---|---|---|
| 1 | **Circuit fuse check**<br>1) Disconnect connectors from ECM with ignition switch turned OFF.<br>2) Check for proper connection to ECM connector at "E23-2", "E23-29", "E23-60", "E23-1", "E23-16", "C37-15", "C37-30", "C37-29", "C37-48" and "C37-58" terminals.<br>3) If OK, check "RADIO" fuse and "IG COIL" fuse for blowing.<br>*Are "DOME" fuse and "IG COIL" fuse in good condition?* | Go to Step 2. | Replace fuse (s) and check for short in circuits connected to fuse(s). |
| 2 | **Power supply circuit check**<br>1) Measure voltage between "E23-2" terminal of ECM connector and body ground.<br>*Is voltage 10 – 14 V?* | Go to Step 3. | "WHT" wire is open circuit. |
| 3 | **Ignition signal check**<br>1) Turn ignition switch to ON position.<br>2) Measure voltage between "E23-29" terminal of ECM connector and body ground.<br>*Is voltage 10 – 14 V?* | Go to Step 4. | "BLK/WHT" or "BLK/YEL" wire is open circuit. |

www.cargeek.ir
www.cargeek.ir

www.CarGeek.ir


| Step | Action | Yes | No |
|---|---|---|---|
| 4 | **Main relay circuit check**<br>1) Turn ignition switch to OFF position.<br>2) Check “FI” fuse (1) (20 A) in fuse box No.2 for blowing.<br>**For J20 engine**<br> 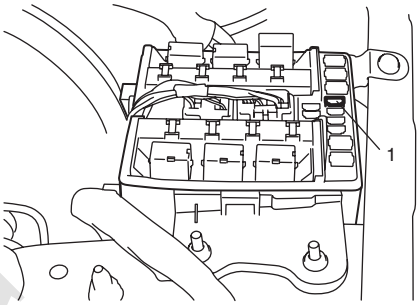 <br><br>I5JB0A110097-02<br>**For M16 engine**<br> 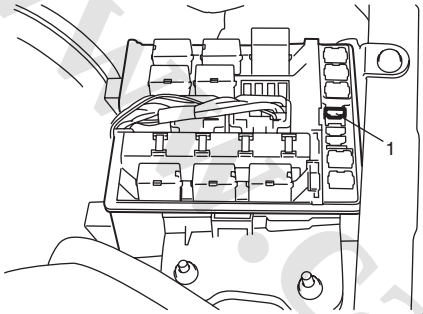 <br><br>I5JB0A110098-02<br>3) If OK, measure voltage between “E23-60” terminal of ECM connector and body ground.<br>*Is voltage 10 – 14 V?* | Go to Step 5. | Go to Step 9. |
| 5 | **Main relay circuit check**<br>1) Connect connectors to ECM with ignition switch turned OFF.<br>2) Turn ignition switch to ON position.<br>3) Measure voltage between “E23-60” terminal of ECM connector and body ground.<br>*Is voltage 0 – 1 V?* | Go to Step 7. | Go to Step 6. |
| 6 | **ECM ground circuit check**<br>1) Turn ignition switch to OFF position.<br>2) Disconnect connectors from ECM.<br>3) Measure resistance between each “C37-15”, “C37-30”, “C37-29”, “C37-48” and “C37-58” terminals of ECM connector and body ground.<br>*Is resistance 1 Ω or less?* | Substitute a known-good ECM and recheck. | “BLK/ORN” or “BLK/YEL” wire is open or high resistance circuit. |
| 7 | **Main relay circuit check**<br>1) Disconnect connectors from ECM with ignition switch turned OFF.<br>2) Using service wire, ground “E23-60” terminal of ECM connector and measure voltage between each “E23-1” and “E23-16” terminals of ECM connector and body ground.<br>*Is voltage 10 – 14 V?* | Go to Step 11. | Go to Step 8. |

www.cargeek.ir

www.CarGeek.ir

| Step | Action | Yes | No |
|---|---|---|---|
| 8 | **Main relay circuit check**<br>1) Remove main relay (1) from fuse box No.2.<br>**For J20 engine**<br> 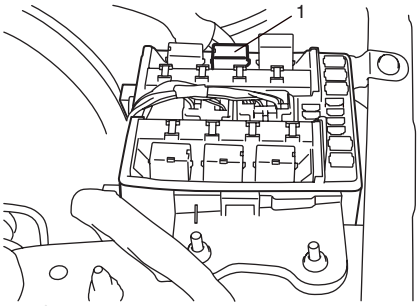 <br><br>I5JB0A110099-02<br>**For M16 engine**<br> <br><br>I5JB0A110100-02<br>2) Check for proper connection to main relay connector at “BLU/YEL” and “BLK/RED” wire terminals.<br>3) If OK, measure resistance between each “E23-1” and “E23-16” wire terminals of ECM connector and “BLU/BLK” wire terminal of main relay connector.<br>*Is resistance 1 Ω or less?* | Go to Step 9. | “BLU/BLK” wire is open circuit or high resistance circuit. |
| 9 | **Main relay circuit check**<br>1) Remove main relay from fuse box No.2 with ignition switch turned OFF.<br>2) Measure voltage between “BLK/RED” wire terminal of main relay connector and body ground.<br>*Is voltage 10 – 14 V?* | Go to Step 10. | “BLK/RED” wire is open circuit. |
| 10 | **Main relay check**<br>1) Check main relay referring to “Control Relay Inspection: in Section 1C”.<br>*Is main relay in good condition?* | “BLU” wire is open or high resistance circuit. | Replace main relay. |
| 11 | **Sensor 5 V power source circuit check**<br>1) Connect connectors to ECM with ignition switch turned OFF.<br>2) Turn ON ignition switch, measure each voltage between “C37-14”, “E23-56”, “E23-53” and “C37-53” terminal of ECM connector and vehicle body ground.<br>*Is each voltage 4 – 6 V?* | ECM power and ground circuit is in good condition. | Go to Step 12. |

www.cargeek.ir

www.CarGeek.ir


| Step | Action | Yes | No |
|---|---|---|---|
| 12 | **Sensor 5 V power source circuit check**<br>1) Disconnect connectors from ECM, TP sensor, MAP sensor, A/C refrigerant pressure sensor (if equipped with A/C), electric load current sensor (for J20 engine) and accelerator pedal position (APP) sensor with ignition switch turned OFF.<br>2) Measure each resistance between “C37-14”, “E23-56”, “E23-54” and “C37-53” terminal of ECM connector and vehicle body ground.<br>*Is each resistance infinity?* | Check internal short circuit of TP sensor, MAP sensor, A/C refrigerant pressure sensor (if equipped with A/C), electric load current sensor (for J20 engine) and/or accelerator pedal position (APP) sensor. | “GRY/RED”, “WHT” and/or “ORN/BLU” wire is shorted to ground circuit. |

## Fuel Injector Circuit Check

S5JB0A1104065

### Wiring Diagram

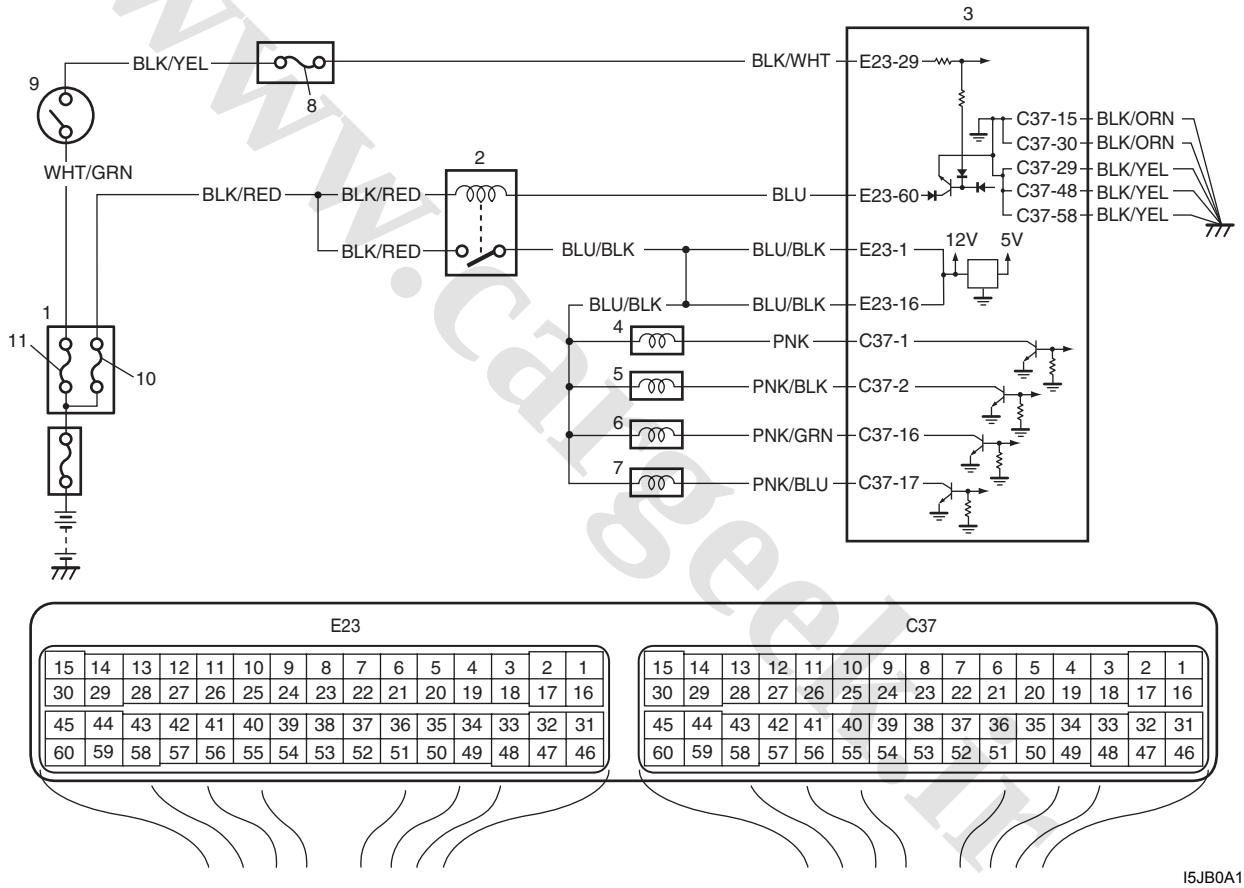


I5JB0A110101-01

| | | | |
|---|---|---|---|
| 1. Fuse box No.2 | 4. No.1 injector | 7. No.4 injector | 10. “FI” fuse |
| 2. Main relay | 5. No.2 injector | 8. “IG COIL” fuse | 11. “IGN” fuse |
| 3. ECM | 6. No.3 injector | 9. Ignition switch | |

www.cargeek.ir

www.CarGeek.ir

## Troubleshooting

**NOTE**

- **Before performed troubleshooting, be sure to read the "Precautions of ECM Circuit Inspection: ".**
- **When measuring circuit voltage, resistance and/or pulse signal at ECM connector, connect the special tool to ECM and/or the ECM connectors referring to "Inspection of ECM and Its Circuits: ".**

| Step | Action | Yes | No |
|---|---|---|---|
| 1 | **Fuel injector check for operating sound**<br>1) Using sound scope, check each injector for operating sound at engine cranking.<br>*Do all 4 injector make operating sound?* | Fuel injectors circuit is in good condition. | Go to Step 2. |
| 2 | **Fuel injector resistance check**<br>1) Disconnect connectors from fuel injectors with ignition switch turned OFF.<br>2) Check for proper connection to fuel injector at each terminals.<br>3) If OK, check all 4 fuel injectors for resistance referring to "Fuel Injector On-Vehicle Inspection: in Section 1G".<br>*Are all injectors in good condition?* | Go to Step 3. | Faulty fuel injector. |
| 3 | **Fuel injector insulation resistance check**<br>1) Check that there is insulation between each fuel injector terminal and engine ground.<br>*Is there insulation?* | Go to Step 4. | Faulty fuel injector. |
| 4 | **Fuel injector power supply check**<br>1) Measure voltage between each "BLU/BLK" wire terminal of fuel injector connector and engine ground with ignition switch turned ON.<br>*Is voltage 10 – 14 V?* | Go to Step 5. | "BLU/BLK" wire is open or shorted to ground circuit.<br>If it is in good condition, go to "ECM Power and Ground Circuit Check: ". |
| 5 | **Wire circuit check**<br>1) Turn OFF ignition switch.<br>2) Disconnect connectors from ECM.<br>3) Measure resistance between each "PNK", "PNK/BLK", "PNK/GRN", "PNK/BLU" wire terminal of fuel injector connector and vehicle body ground.<br>*Is resistance infinity?* | Go to Step 6. | "PNK", "PNK/BLK", "PNK/GRN" and/or "PNK/BLU" wire(s) are shorted to ground. |
| 6 | **Wire circuit check**<br>1) Measure voltage between each "PNK", "PNK/BLK", "PNK/GRN", "PNK/BLU" wire terminal of fuel injector connector and vehicle body ground with ignition switch turned ON.<br>*Is voltage 0 V?* | Go to Step 7. | "PNK", "PNK/BLK", "PNK/GRN" and/or "PNK/BLU" wire(s) are shorted to power supply circuit. |
| 7 | **Fuel injector drive signal check**<br>1) Connect connectors to each fuel injector and ECM with ignition switch turned OFF.<br>2) Turn ON ignition switch.<br>3) Measure voltage between each "C37-1", "C37-2", "C37-16", "C37-17" terminal of ECM connector and vehicle body ground.<br>*Is voltage 10 – 14 V?* | Check fuel injector referring to "Fuel Injector Inspection: in Section 1G".<br>If check result is satisfactory, substitute a known-good ECM and recheck. | "PNK", "PNK/BLK", "PNK/GRN" and/or "PNK/BLU" wire(s) are open circuit. |

www.cargeek.ir

www.CarGeek.ir


## Fuel Pump and Its Circuit Check

S5JB0A1104066

### Wiring Diagram

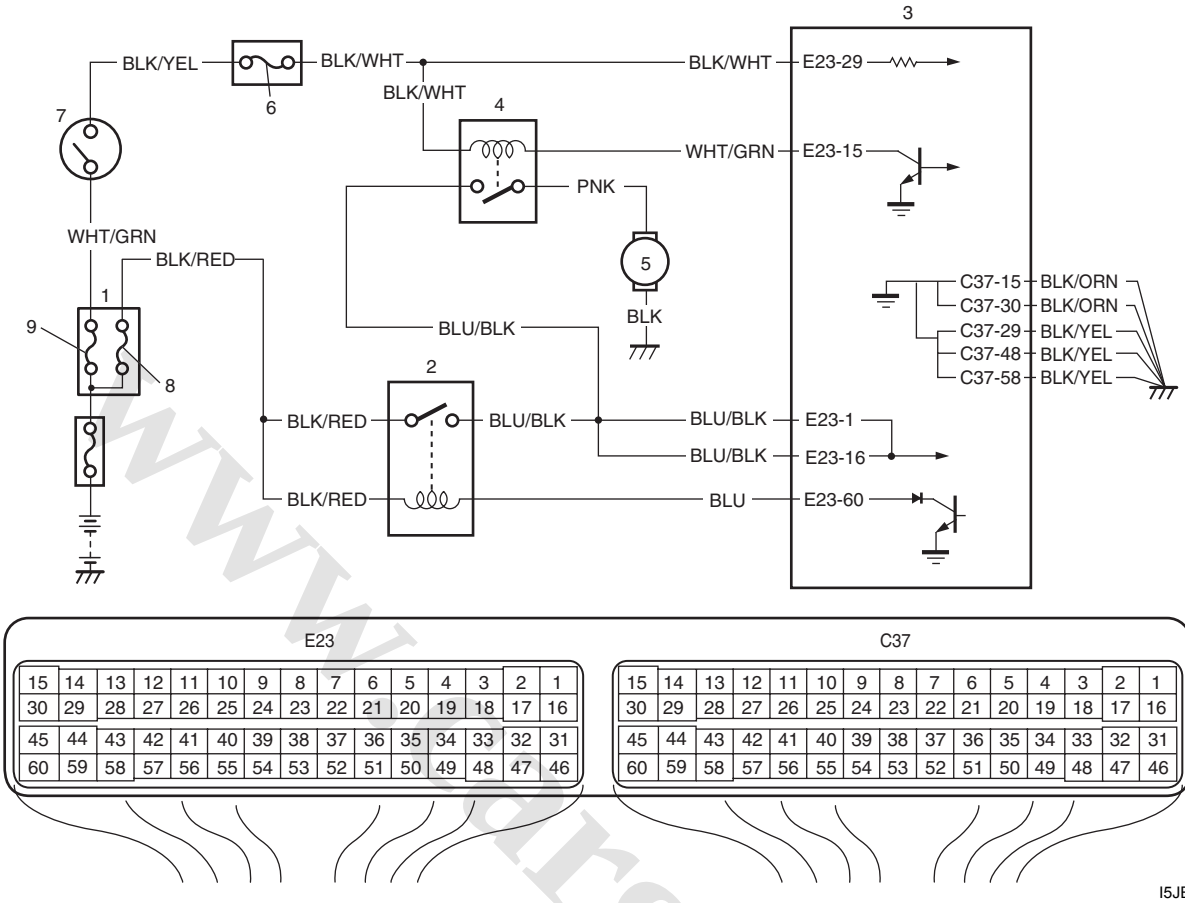


I5JB0A110102-01

| | | |
|---|---|---|
| 1. Fuse box No.2 | 4. Fuel pump relay | 7. Ignition switch |
| 2. Main relay | 5. Fuel pump | 8. “FI” fuse |
| 3. ECM | 6. “IG COIL” fuse | 9. “IGN” fuse |

www.cargeek.ir

www.CarGeek.ir

## Troubleshooting

**NOTE**

- **Before performed troubleshooting, be sure to read the “Precautions of ECM Circuit Inspection: ”.**
- **When measuring circuit voltage, resistance and/or pulse signal at ECM connector, connect the special tool to ECM and/or the ECM connectors referring to “Inspection of ECM and Its Circuits: ”.**

| Step | Action | Yes | No |
|---|---|---|---|
| 1 | **Fuel pump control system check for operation**<br>*Is fuel pump heard to operate 2 sec. after ignition switch is turned ON?*<br> 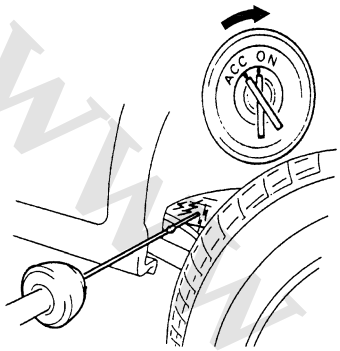 <br>I2RH01110132-01 | Fuel pump circuit is in good condition. | Go to Step 2. |
| 2 | **Fuel pump relay power supply check**<br>1) Disconnect fuel pump relay from fuse box No.2 with ignition switch turned OFF.<br>2) Check for proper connection to fuel pump relay at each terminal.<br>3) If OK, turn ON ignition switch, measure voltage between “BLK/WHT” wire terminal of fuel pump relay connector and engine ground.<br>*Is voltage 10 – 14 V?* | Go to Step 3. | “BLK/WHT” wire is open or shorted to ground circuit. |
| 3 | **Fuel pump relay power supply check**<br>1) Turn ON ignition switch, measure voltage between “BLU/BLK” wire terminal of fuel pump relay connector and engine ground.<br>*Is voltage 10 – 14 V?* | Go to Step 4. | “BLU/BLK” wire is open circuit. |
| 4 | **Fuel pump relay check**<br>1) Check fuel pump relay referring to “Control Relay Inspection: in Section 1C”.<br>*Is relay in good condition?* | Go to Step 5. | Faulty relay. |
| 5 | **Fuel pump relay drive signal check**<br>1) Connect fuel pump relay to fuse box No.2.<br>2) Connect voltmeter between “E23-15” terminal of ECM connector and vehicle body ground.<br>3) Measure voltage 2 second after ignition switch is turned ON.<br>*Is voltage 10 – 14 V?* | Go to Step 6. | “WHT/GRN” wire is open circuit or shorted to ground circuit. |

www.cargeek.ir

www.CarGeek.ir


| Step | Action | Yes | No |
|---|---|---|---|
| 6 | **Fuel pump relay drive signal check**<br>1) Measure voltage within 2 second after ignition switch is turned ON.<br>*Is voltage 0 – 1 V?* | Go to Step 7. | Substitute a known-good ECM and recheck. |
| 7 | **Wire circuit check**<br>1) Turn OFF ignition switch.<br>2) Detach fuel tank referring to “Fuel Tank Removal and Installation: in Section 1G”.<br>3) Disconnect connector from fuel pump.<br>4) Measure resistance between “PNK” wire terminal of fuel pump connector and vehicle body ground.<br>*Is resistance infinity?* | Go to Step 8. | “PNK” wire is shorted to ground. |
| 8 | **Fuel pump circuit check**<br>1) Connect service wire between “E23-15” terminal of ECM connector and vehicle body ground.<br>2) Turn ON ignition switch, measure voltage between “PNK” terminal at fuel pump connector and vehicle body ground.<br>*Is voltage 10 – 14 V?* | Go to Step 9. | “PNK” wire is open circuit. |
| 9 | **Fuel pump circuit check**<br>1) Turn OFF ignition switch.<br>2) Measure resistance between “BLK” wire terminal at fuel pump connector and vehicle body ground.<br>*Is resistance less than 5 Ω?* | Faulty fuel pump. | “BLK” wire is open circuit. |

www.cargeek.ir
www.cargeek.ir

www.CarGeek.ir

## Fuel Pressure Check

S5JB0A1104067

### System Diagram

### Special tool

**(A): 09912–58442**
**(B): 09912–58432**
**(C): 09912–58490**

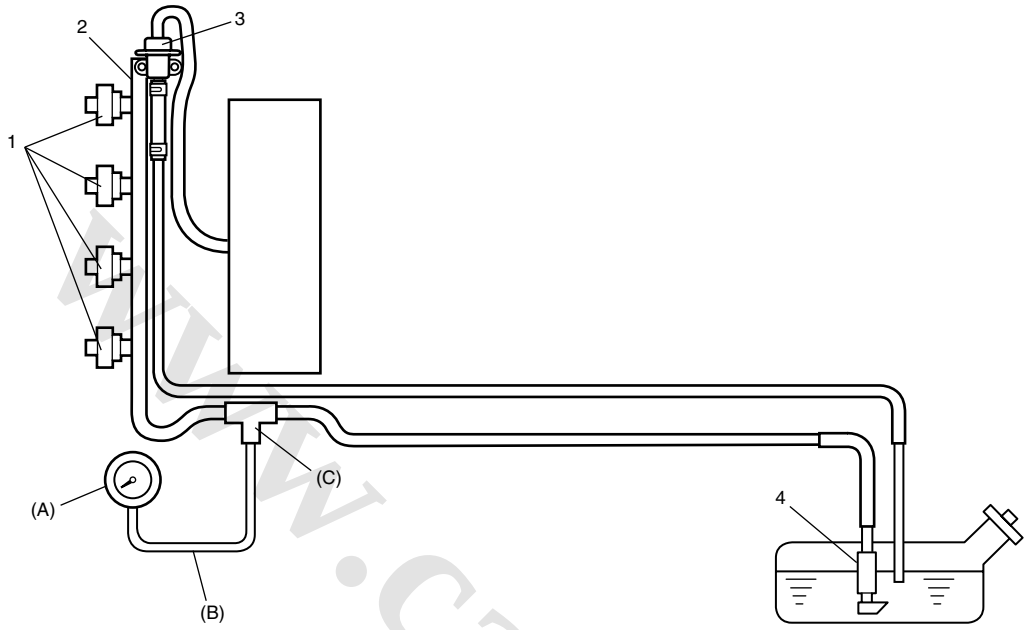


I2RH01110133-01

| | | | |
|---|---|---|---|
| 1. Injector | 2. Delivery pipe | 3. Fuel pressure regulator | 4. Fuel filter and fuel pump |

www.cargeek.ir

www.cargeek.ir

www.CarGeek.ir


**Troubleshooting**

**NOTE**

**Before using following flow, check to make sure that battery voltage is higher than 11 V. If battery voltage is low, pressure becomes lower than specification even if fuel pump and line are in good condition.**

| Step | Action | Yes | No |
|---|---|---|---|
| 1 | **Fuel pump operating sound check**<br>1) Remove fuel filler cap and then turn ON ignition switch.<br>*Can you hear operating sound?* | Go to Step 2. | Go to “Fuel Pump and Its Circuit Check: ”. |
| 2 | **Fuel pressure check**<br>1) Check fuel pressure referring to “Fuel Pressure Inspection: in Section 1G”.<br>*Is check result satisfactory?* | Go to Step 3. | Go to Step 6. |
| 3 | **Fuel pressure check**<br>1) Start engine and warm it up to normal operating temperature.<br>2) Keep engine speed at 4000 rpm.<br>*Does fuel pressure show about the same value as Step 2?* | Go to Step 4. | Go to Step 8. |
| 4 | **Fuel line check**<br>1) Check fuel pipe, fuel hose and joint for fuel leakage.<br>*Are they in good condition?* | Go to Step 5. | Repair or replace defective part. |
| 5 | **Fuel line check**<br>1) Check fuel pipe, fuel hose and joint for damage or deform.<br>*Are they in good condition?* | Faulty fuel pressure regulator. | Repair or replace damaged or damaged part. |
| 6 | *Was fuel pressure higher than specification in Step 2?* | Go to Step 7. | Go to Step 8. |
| 7 | **Fuel line check**<br>1) Check fuel pipe, fuel hose and joint for damage or deform.<br>*Are they in good condition?* | Faulty fuel pressure regulator. | Repair or replace damaged or damaged part. |
| 8 | **Fuel line check**<br>1) Check fuel pipe, fuel hose and joint for damage or deform.<br>*Are they in good condition?* | Clogged fuel filter, faulty fuel pump, faulty fuel pressure regulator or fuel leakage from hose connection in fuel tank. | Repair or replace defective part. |

www.cargeek.ir

www.CarGeek.ir

## A/C System Circuits Check

S5JB0A1104069

### Wiring Diagram

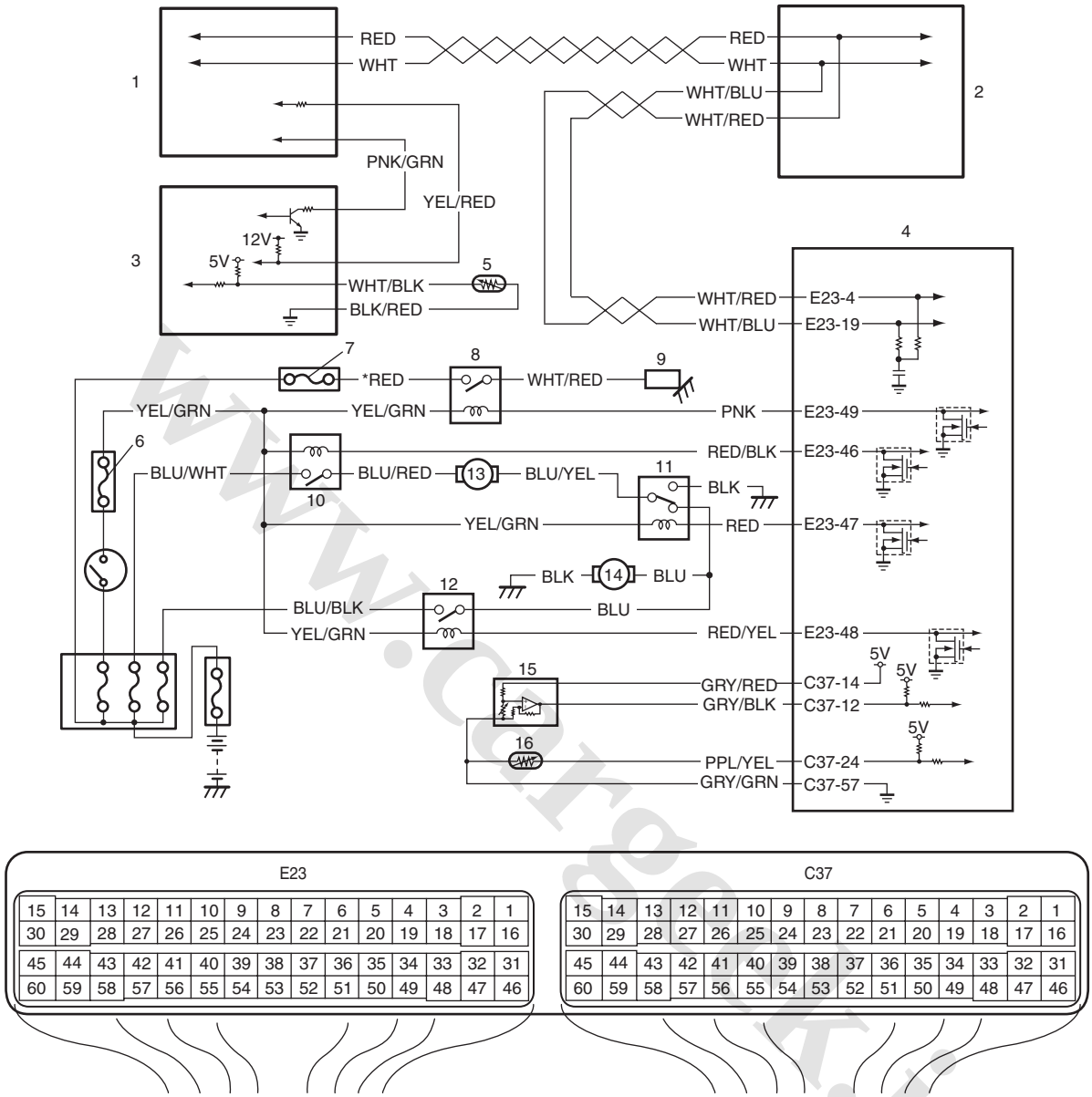


I5JB0A110103-02

| | | | |
|---|---|---|---|
| 1. BCM | 6. “IG2 SIG” fuse | 11. Radiator cooling fan relay No.2 | 16. ECT sensor |
| 2. ABS hydraulic unit / control module assembly | 7. “CPRSR” fuse | 12. Radiator cooling fan relay No.3 | *: For M16 engine |
| 3. HVAC control module | 8. Compressor relay | 13. Radiator cooling fan No.1 | |
| 4. ECM | 9. Compressor | 14. Radiator cooling fan No.2 | |
| 5. Evaporator temperature sensor | 10. Radiator cooling fan relay No.1 | 15. A/C refrigerant pressure sensor | |

www.cargeek.ir

www.CarGeek.ir


**Troubleshooting**

**NOTE**

- **Before performed troubleshooting, be sure to read the "Precautions of ECM Circuit Inspection: ".**
- **When measuring circuit voltage, resistance and/or pulse signal at ECM connector, connect the special tool to ECM and/or the ECM connectors referring to "Inspection of ECM and Its Circuits: ".**
- **When A/C evaporator outlet air temp. is below 0 °C (32 °F) (for J20 engine) or 1.3 °C (34.3 °F) (for M16 engine), A/C remains OFF ("E23-49" terminal voltage becomes 10 – 14 V). This condition is not abnormal.**

| Step | Action | Yes | No |
|---|---|---|---|
| 1 | **Reception data check from BCM**<br>1) Connect scan tool to DLC with ignition switch turned OFF.<br>2) Turn ON ignition switch.<br>3) Check DTC for reception data from BCM.<br>*Is there DTC P1678?* | Go to applicable DTC diag. flow. | Go to Step 2. |
| 2 | **DTC check of HVAC control module**<br>1) Check HVAC control module for DTC.<br>*Is there DTC(s)?* | Go to applicable DTC diag. flow. | Go to Step 3. |
| 3 | **A/C switch signal circuit check**<br>1) Start engine and select "DATA LIST" mode on scan tool.<br>2) Check A/C switch signal under following conditions respectively.<br>**A/C switch signal**<br>**Engine running, A/C switch OFF: OFF**<br>**Engine running, A/C switch ON and blower speed selector turned 1st position or more: ON**<br>*Is check result satisfactory?* | Go to Step 4. | Check HVAC control module and its circuit. |
| 4 | **DTC check of ECT sensor circuit**<br>1) Check ECM for DTC of ECT sensor circuit.<br>*Is there DTC P0116, DTC P0117 or DTC P0118?* | Go to applicable DTC diag. flow. | Go to Step 5. |
| 5 | **Radiator cooling fan control system check**<br>*Is radiator cooling fan started when A/C and blower speed selector switch are turned ON with engine running?* | Go to Step 11. | Go to Step 6. |
| 6 | **Radiator cooling fan control circuit check**<br>1) Check DTC with scan tool.<br>*Is DTC P0480 displayed?* | Go to "DTC P0480: Fan 1 (Radiator Cooling Fan) Control Circuit: ". | Go to Step 7. |
| 7 | **Evaporator temperature sensor check**<br>1) Check evaporator temperature sensor referring to "A/C Evaporator Temperature Sensor Inspection: in Section 7B".<br>*Is resistance within specification?* | Go to Step 8. | Faulty evaporator temperature sensor. |
| 8 | **DTC check of A/C refrigerant pressure sensor circuit**<br>1) Connect scan tool to DLC with ignition switch turned OFF.<br>2) Turn ON ignition switch.<br>3) Check ECM for DTC of A/C refrigerant pressure sensor circuit.<br>*Is there DTC P0532 or DTC P0533?* | Go to applicable DTC diag. flow. | Go to Step 9. |

www.cargeek.ir

www.CarGeek.ir

| Step | Action | Yes | No |
|---|---|---|---|
| 9 | **A/C refrigerant pressure sensor voltage check**<br>1) Check A/C refrigerant pressure sensor voltage referring to “Inspection of ECM and Its Circuits: ”.<br>*Is voltage within specified value?* | Go to Step 10. | Check amount of refrigerant. If OK, replace A/C refrigerant pressure sensor. |
| 10 | **Radiator cooling fan check**<br>1) Check radiator cooling fan referring to “Radiator Cooling Fan Motor On-Vehicle Inspection: in Section 1F”.<br>*Is check result satisfactory?* | Radiator cooling fan drive circuit malfunction. If circuit is OK, go to Step 7. | Replace radiator cooling fan motor. |
| 11 | **A/C compressor control system check**<br>*Is A/C compressor started when A/C and blower speed selector switch are turned ON with engine running?* | A/C system is in good condition. | Go to Step 12. |
| 12 | **A/C compressor relay circuit check**<br>1) Measure voltage between “E23-49” wire terminal of ECM connector and vehicle body ground under following conditions respectively.<br>**Voltage between “E23-49” terminal of ECM connector and ground**<br>**While engine running and A/C switch turned OFF: 10 – 14 V**<br>**While engine running, A/C and blower speed selector switch turned ON: 0 – 1 V**<br>*Is check result satisfactory?* | Go to Step 13. | Go to Step 14. |
| 13 | **A/C compressor relay check**<br>1) Check A/C compressor relay referring to “A/C Compressor Relay Inspection: in Section 7B”.<br>*Is it in good condition?* | A/C compressor drive circuit malfunction. | Replace A/C compressor relay. |
| 14 | **A/C compressor relay circuit check**<br>1) Remove A/C compressor relay with ignition switch turned OFF.<br>2) Turn ON ignition switch, measure voltage between “YEL/GRN” wire terminal of A/C compressor relay connector and vehicle body ground.<br>*Is voltage 10 –14 V?* | Go to Step 15. | “YEL/GRN” wire is open circuit. |
| 15 | **A/C compressor relay check**<br>1) Check A/C compressor relay referring to “A/C Compressor Relay Inspection: in Section 7B”.<br>*Is it in good condition?* | “PNK” wire is open circuit. If OK, substitute a known-good ECM and recheck. | Replace A/C compressor relay. |

www.cargeek.ir

www.CarGeek.ir


## Electric Load Signal Circuit Check

S5JB0A1104070

### Wiring Diagram

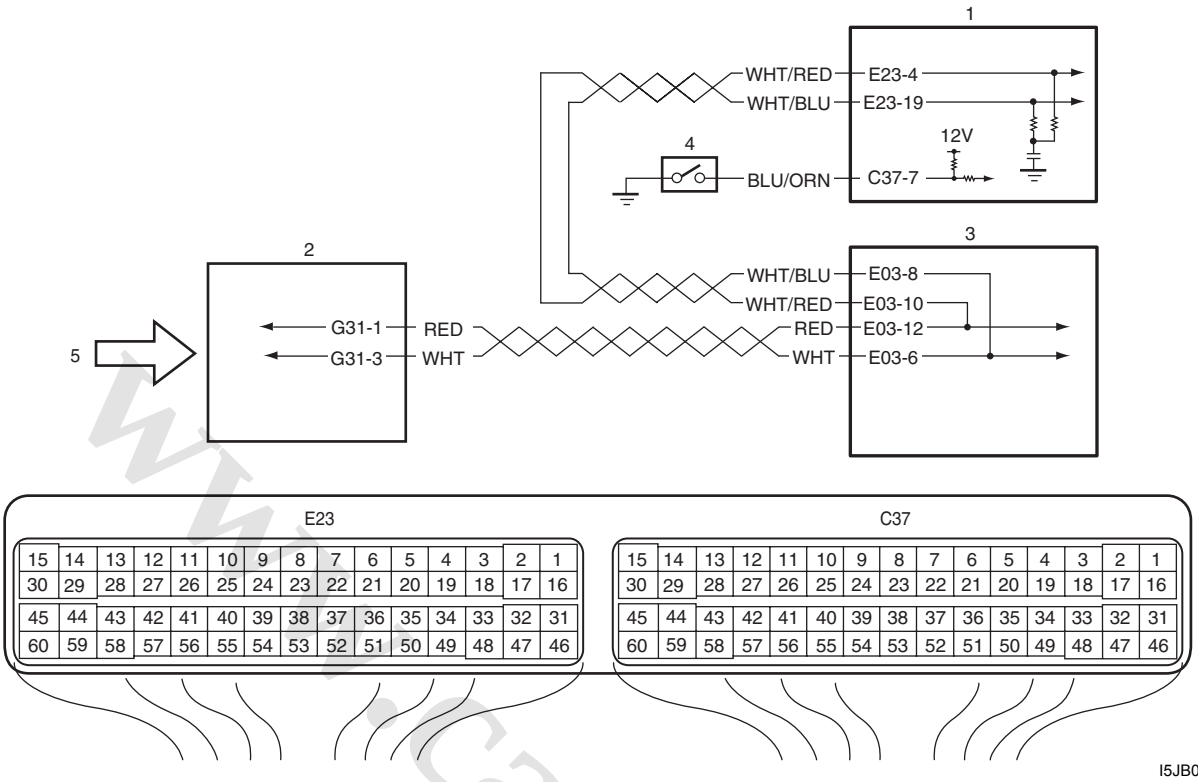


I5JB0A110104-02

| | | |
|---|---|---|
| 1. ECM | 3. ABS hydraulic unit / control module assembly | 5. Electric load signal (blower motor signal, rear defogger signal, headlight signal and A/C switch signal), etc. |
| 2. BCM | 4. PSP switch | |

www.cargeek.ir

www.CarGeek.ir

## Troubleshooting

**NOTE**

- **Before performed troubleshooting, be sure to read the "Precautions of ECM Circuit Inspection: ".**
- **When measuring circuit voltage, resistance and/or pulse signal at ECM connector, connect the special tool to ECM and/or the ECM connectors referring to "Inspection of ECM and Its Circuits: ".**

| Step | Action | Yes | No |
|---|---|---|---|
| 1 | **DTC check**<br>1) Connect scan tool to DLC with ignition switch turned OFF.<br>2) Turn ON ignition switch and check DTC.<br>*Is there DTC P1674 and/or P1678?* | Go to applicable DTC diag. flow. | Go to Step 2. |
| 2 | **Electric load signal circuit check**<br>1) Start engine and select "DATA LIST" mode on scan tool.<br>2) Check electric load signal under following conditions respectively.<br>**A/C switch signal**<br>**Engine running, A/C switch OFF: OFF**<br>**Engine running, A/C switch ON and blower speed selector turned 1st position or more: ON**<br>**Blower fan signal**<br>**Engine running, blower speed selector OFF: OFF**<br>**Engine running, blower speed selector 5th position or more: ON**<br>**PSP signal**<br>**Engine running, steering wheel to neutral position: OFF**<br>**Engine running, turning steering wheel to the right or left as far as it stops: ON**<br>**Electric load signal**<br>**Engine running, rear defogger switch or headlight switch OFF: OFF**<br>**Engine running, rear defogger switch or headlight switch ON: ON**<br>*Is check result satisfactory?* | Electric load signal circuit is in good condition | Check defective signal circuit. |

www.cargeek.ir

www.CarGeek.ir


## Radiator Cooling Fan Low Speed Control System Check

S5JB0A1104071

### Wiring Diagram

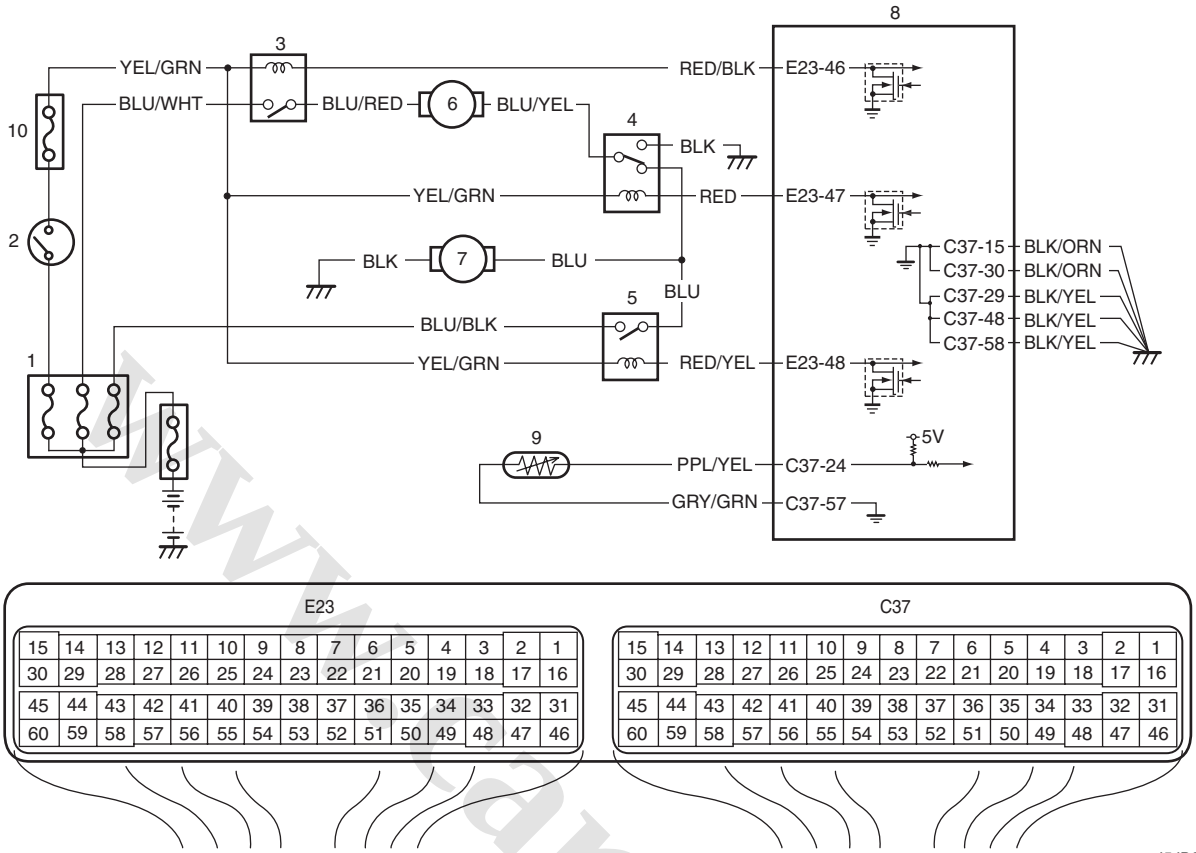


I5JB0A110105-01

| | | |
|---|---|---|
| 1. Fuse box No.1 | 5. Radiator cooling fan relay No. 3 | 9. ECT sensor |
| 2. Ignition switch | 6. Radiator cooling fan motor No.1 | 10. “IG2 SIG” fuse |
| 3. Radiator cooling fan relay No. 1 | 7. Radiator cooling fan motor No.2 | |
| 4. Radiator cooling fan relay No. 2 | 8. ECM | |

### Troubleshooting

**⚠ WARNING**

**Keep hands, tools, and clothing away from engine cooling fan to help prevent personal injury. This fan is electric and can come on whether or not the engine is running. The fan can start automatically in response to the ECT sensor with the ignition switch at the “ON” position.**

**NOTE**

- **Before performed troubleshooting, be sure to read the “Precautions of ECM Circuit Inspection: ”.**
- **When measuring circuit voltage, resistance and/or pulse signal at ECM connector, connect the special tool to ECM and/or the ECM connectors referring to “Inspection of ECM and Its Circuits: ”.**

www.cargeek.ir

www.CarGeek.ir

| Step | Action | Yes | No |
|---|---|---|---|
| 1 | *Is there DTC(s) of ECT sensor circuit (DTC P0116 / P0117 / P0118) and/or radiator cooling fan circuit (DTC P0480)?* | Go to corresponding DTC flow. | Go to Step 2. |
| 2 | **Low speed radiator cooling fan control circuit check**<br>1) Connect scan tool to DLC with ignition switch turned OFF.<br>2) Start engine and select “DATA LIST” mode on scan tool.<br>3) Warm up engine until coolant temp. is 97.5 °C, 207.5 °F or higher and A/C switch turns OFF (if equipped with A/C). (If engine coolant temp. dose not rise, check engine cooling system or ECT sensor.)<br>*Is radiator cooling fan started at low speed when engine coolant temp. reached above temp.?* | Radiator cooling fan low speed control system is in good condition. | Perform from Step 2 to Step 7 in DTC P0480 diag. flow. If OK, Go to Step 3. |
| 3 | **Wire circuit check**<br>1) Disconnect radiator cooling fan relay No.1 from relay box with ignition switch turned OFF.<br>2) Turn ON ignition switch.<br>3) Measure voltage between “BLU/WHT” wire terminal of radiator cooling fan relay No.1 connector and vehicle body ground.<br>*Is voltage 10 – 14 V?* | Go to Step 4. | “BLU/WHT” wire is open circuit. |
| 4 | **Radiator cooling fan control check**<br>1) Disconnect connector from radiator cooling fan motor No.1 and connect radiator cooling fan relay No.1 with ignition switch turned OFF.<br>2) Run engine until ECT is over 97.5 °C, 207.5 °F.<br>3) Measure voltage between “BLU/RED” wire terminals of radiator cooling fan motor No.1 connector and vehicle body ground.<br>*Is voltage 10 – 14 V?* | Go to Step 5. | Go to Step 6. |
| 5 | **Wire circuit check**<br>1) Disconnect radiator cooling fan relay No.1 from relay box with ignition switch turned OFF.<br>2) Measure resistance between “BLU/RED” wire terminals of radiator cooling fan relay No.1 connector and radiator cooling fan motor No.1 connector.<br>*Is resistance below 3 Ω?* | Go to Step 15. | “BLU/RED” wire is open or high resistance. |
| 6 | **Wire circuit check**<br>1) Disconnect radiator cooling fan relay No.2 and connect radiator cooling fan motor No.1 connector with ignition switch turned OFF.<br>2) Run engine until ECT is over 97.5 °C, 207.5 °F.<br>3) Measure voltage between “BLU/YEL” wire terminal of radiator cooling fan relay No.2 connector and vehicle body ground.<br>*Is voltage 10 – 14 V?* | Go to Step 10. | Go to Step 7. |

www.cargeek.ir

www.CarGeek.ir


| Step | Action | Yes | No |
|---|---|---|---|
| 7 | **Wire circuit check**<br>1) Disconnect radiator cooling fan motor No.1 connector with ignition switch turned OFF.<br>2) Measure resistance between “BLU/YEL” wire terminal of radiator cooling fan relay No.2 connector and vehicle body ground.<br>*Is resistance infinity?* | Go to Step 8. | “BLU/YEL” wire is shorted to ground circuit. |
| 8 | **Wire circuit check**<br>1) Measure voltage between “BLU/YEL” wire terminal of radiator cooling fan relay No.2 connector and vehicle body ground with ignition switch turned ON.<br>*Is voltage 0 V?* | Go to Step 9. | “BLU/YEL” wire is shorted to other circuit. |
| 9 | **Wire circuit check**<br>1) Measure resistance between “BLU/YEL” wire terminal of radiator cooling fan relay No.2 connector and radiator cooling fan motor No.1 connector with ignition switch turned OFF.<br>*Is resistance below 5 Ω?* | Go to Step 16. | “BLU/YEL” wire is open circuit. |
| 10 | **Radiator cooling fan control check**<br>1) Disconnect connector from radiator cooling fan motor No.2 and connect radiator cooling fan relay No.2 with ignition switch turned OFF.<br>2) Run engine until ECT is over 97.5 °C, 207.5 °F.<br>3) Measure voltage between “BLU” wire terminals of radiator cooling fan motor No.2 connector and vehicle body ground.<br>*Is voltage 10 – 14 V?* | Go to Step 14. | Go to Step 11. |
| 11 | **Wire circuit check**<br>1) Disconnect radiator cooling fan relay No.2 with ignition switch turned OFF.<br>2) Measure resistance between “BLU” wire terminal of radiator cooling fan relay No.2 connector and vehicle body ground.<br>*Is resistance infinity?* | Go to Step 12. | “BLU” wire is shorted to ground circuit. |
| 12 | **Wire circuit check**<br>1) Measure voltage between “BLU” wire terminal of radiator cooling fan relay No.2 connector and vehicle body ground with ignition switch turned ON.<br>*Is voltage 0 V?* | Go to Step 13. | “BLU” wire is shorted to other circuit. |
| 13 | **Wire circuit check**<br>1) Measure resistance between “BLU” wire terminals of radiator cooling fan relay No.2 connector and radiator cooling fan motor No.2 connector with ignition switch turned OFF.<br>*Is resistance below 3 Ω?* | Go to Step 15. | “BLU” wire is open circuit. |
| 14 | **Wire circuit check**<br>1) Measure resistance between “BLK” wire terminal of radiator cooling fan motor No.2 connector and vehicle body ground with ignition switch turned OFF.<br>*Is resistance below 3 Ω?* | Go to Step 16. | “BLK” wire is open circuit. |

www.cargeek.ir

www.CarGeek.ir

| Step | Action | Yes | No |
|---|---|---|---|
| 15 | **Radiator cooling fan relay check**<br>1) Check radiator cooling fan relay referring to “Radiator Cooling Fan Relay Inspection: in Section 1F”.<br>*Is it in good condition?* | Substitute a known-good ECM and recheck. | Replace radiator cooling fan relay. |
| 16 | **Radiator cooling fan motor check**<br>1) Check radiator cooling fan motor referring to “Radiator Cooling Fan Motor On-Vehicle Inspection: in Section 1F”.<br>*Is it in good condition?* | Substitute a known-good ECM and recheck. | Replace radiator cooling fan motor. |

## Radiator Cooling Fan High Speed Control System Check

S5JB0A1104072

### Wiring Diagram

Refer to “Radiator Cooling Fan Low Speed Control System Check: ”.

### Troubleshooting

**⚠ WARNING**

**Keep hands, tools, and clothing away from engine cooling fan to help prevent personal injury. This fan is electric and can come on whether or not the engine is running. The fan can start automatically in response to the ECT sensor with the ignition switch at the “ON” position.**

**NOTE**

- **Before performed troubleshooting, be sure to read the “Precautions of ECM Circuit Inspection: ”.**
- **When measuring circuit voltage, resistance and/or pulse signal at ECM connector, connect the special tool to ECM and/or the ECM connectors referring to “Inspection of ECM and Its Circuits: ”.**

| Step | Action | Yes | No |
|---|---|---|---|
| 1 | *Is there DTC(s) of ECT sensor circuit (DTC P0116 / P0117 / P0118) and/or radiator cooling fan circuit (DTC P0480)?* | Go to corresponding DTC flow. | Go to Step 2. |
| 2 | **Low speed radiator cooling fan control circuit check**<br>1) Connect scan tool to DLC with ignition switch turned OFF.<br>2) Start engine and select “DATA LIST” mode on scan tool.<br>3) Warm up engine until coolant temp. is 97.5 °C, 207.5 °F or higher and A/C switch turns OFF (if equipped with A/C). (If engine coolant temp. dose not rise, check engine cooling system or ECT sensor.)<br>*Is radiator cooling fan started at low speed when engine coolant temp. reached above temp.?* | Go to Step 3. | Perform from Step 2 to Step 5 in “Radiator Cooling Fan Low Speed Control System Check: ”. |
| 3 | **High speed radiator cooling fan control circuit check**<br>1) Start engine and select “DATA LIST” mode on scan tool.<br>2) Warm up engine until coolant temp. is 102.5 °C, 216.5 °F or higher and A/C switch turns OFF (if equipped with A/C). (If engine coolant temp. dose not rise, check engine cooling system or ECT sensor.)<br>*Is radiator cooling fan started at high speed when engine coolant temp. reached above temp?* | Radiator cooling fan control system is in good condition. | Perform from Step 8 to Step 19 in DTC P0480 diag. flow.<br>If OK, Go to Step 4. |

www.cargeek.ir

www.CarGeek.ir


| Step | Action | Yes | No |
|---|---|---|---|
| 4 | **Wire circuit check**<br>1) Disconnect radiator cooling fan relay No.3 from relay box with ignition switch turned OFF.<br>2) Turn ON ignition switch.<br>3) Measure voltage between “BLU/BLK” wire terminal of radiator cooling fan relay No.3 connector and vehicle body ground.<br>*Is voltage 10 – 14 V?* | Go to Step 5. | “BLU/BLK” wire is open circuit. |
| 5 | **Radiator cooling fan control check**<br>1) Disconnect connector from radiator cooling fan motor No.2 with ignition switch turned OFF.<br>2) Turn ignition switch ON.<br>3) Measure voltage between “BLU” wire terminal of radiator cooling fan relay No.3 connector and vehicle body ground.<br>*Is voltage 0 V?* | Go to Step 6. | “BLU” wire is shorted to other circuit. |
| 6 | **Wire circuit check**<br>1) Measure resistance between “BLU” wire terminals of radiator cooling fan relay No.3 connector and radiator cooling fan motor No.2 connector with ignition switch turned OFF.<br>*Is resistance below 3 Ω?* | Go to Step 7. | “BLU” wire is open or high resistances. |
| 7 | **Wire circuit check**<br>1) Disconnect radiator cooling fan relay No.2 from relay box.<br>2) Measure resistance between “BLK” wire terminal of radiator cooling fan relay No.2 connector and vehicle body ground.<br>*Is resistance below 3 Ω?* | Go to Step 8. | “BLK” wire is open circuit. |
| 8 | **Radiator cooling fan relay check**<br>1) Check radiator cooling fan relay referring to “Radiator Cooling Fan Relay Inspection: in Section 1F”.<br>*Is it in good condition?* | Go to Step 9. | Replace radiator cooling fan relay. |
| 9 | **Radiator cooling fan motor check**<br>1) Check radiator cooling fan motor referring to “Radiator Cooling Fan Motor On-Vehicle Inspection: in Section 1F”.<br>*Is it in good condition?* | Substitute a known-good ECM and recheck. | Replace radiator cooling fan motor. |

www.cargeek.ir

www.CarGeek.ir

# Repair Instructions

## Idle Speed and IAC Throttle Valve Opening Inspection

S5JB0A1106001

Before idle speed check, make sure of the following.

- Lead wires and hoses of electronic fuel injection and engine and emission control systems are connected securely.
- Valve lash is checked according to maintenance schedule.
- Ignition timing is within specification.
- All accessories (wipers, heater, lights, A/C, etc.) are out of service.
- Air cleaner has been properly installed and is in good condition.
- No abnormal air drawn in from air intake system.

After all items are confirmed, check idle speed and IAC throttle opening as follows.

**NOTE**

**Before starting engine, place transmission gear shift lever in "Neutral" (shift selector lever to "P" range for A/T vehicle), and set parking brake and block drive wheels.**

1) Connect SUZUKI scan tool to DLC (1) with ignition switch turned OFF.

**Special tool**
**(A): SUZUKI scan tool**

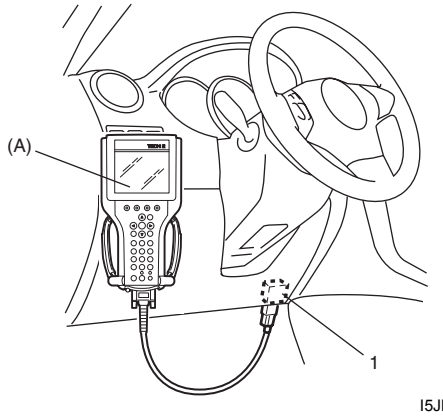


I5JB0A110106-01

2) Warm up engine to normal operating temperature.
3) Check engine idle speed and "IAC throttle opening" by using "Data List" mode on scan tool to check "IAC throttle opening".
4) If check result is out of specification, inspect electric throttle body assembly referring to "Electric Throttle Body Assembly On-Vehicle Inspection: in Section 1C".

**Engine idle speed and IAC throttle opening**

| | A/C OFF | A/C ON |
|---|---|---|
| For J20 engine | 650 ± 50 rpm<br>5 – 55% | 750 ± 50 rpm |
| For M16 engine | 660 ± 50 rpm<br>5 – 55% | 750 ± 50 rpm |

5) Check that specified engine idle speed is obtained with A/C turned ON if vehicle is equipped with A/C. If not, check A/C system.

www.cargeek.ir

www.CarGeek.ir


# Special Tools and Equipment

## Special Tool

S5JB0A1108001

| | |
|---|---|
| 09912–58432<br>Fuel pressure gauge hose<br>This tool is included in fuel pressure gauge set (09912-58413). ☞ 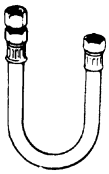 | 09912–58442<br>Fuel pressure gauge<br>This tool is included in fuel pressure gauge set (09912-58413). ☞ |
| 09912–58490<br>3-way joint & hose<br>☞ 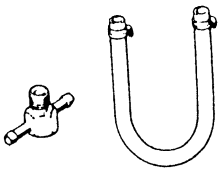 | 09930–76420<br>Timing-light (dry cell type)<br>☞ 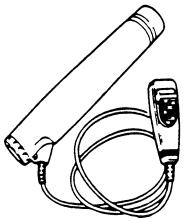 |
| 09933–06320<br>ECM check harness (120P)<br>☞ 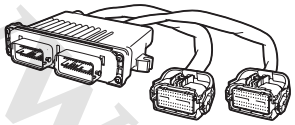 | SUZUKI scan tool<br>—<br>This kit includes following items. 1. Tech 2, 2. PCMCIA card, 3. DLC cable, 4. SAE 16/19 adapter, 5. Cigarette cable, 6. DLC loopback adapter, 7. Battery power cable, 8. RS232 cable, 9. RS232 adapter, 10. RS232 loop back connector, 11. Storage case, 12. Power supply ☞ / ☞ 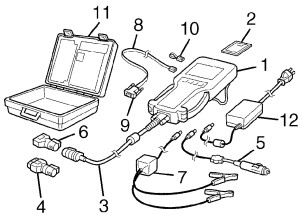 |

www.cargeek.ir

 www.CarGeek.ir

# Aux. Emission Control Devices

## Diagnostic Information and Procedures

### EGR System Inspection

S5JB0A1204001

1) Connect SUZUKI scan tool to data link connector (DLC) with ignition switch turned OFF.
2) Turn ON ignition switch and erase DTC using “CLEAR DTC” in “TROUBLE CODES” menu.
3) Start engine and warm it up to normal operating temperature, then select “DATA LIST” mode on scan tool.
4) Make sure that vehicle condition is as follows.
   - Vehicle speed = 0 km/h (0 mph)
   - Engine speed ≤ 900 rpm
   - Engine coolant temp. ≥ 90 °C, 194 °F
5) With engine idling (without depressing accelerator pedal), open EGR valve by using “STEP EGR” mode in “MISC TEST” menu. In this state, as EGR valve opening increases engine idle speed drops. If not, possible cause is clogged EGR gas passage, stuck or faulty EGR valve.

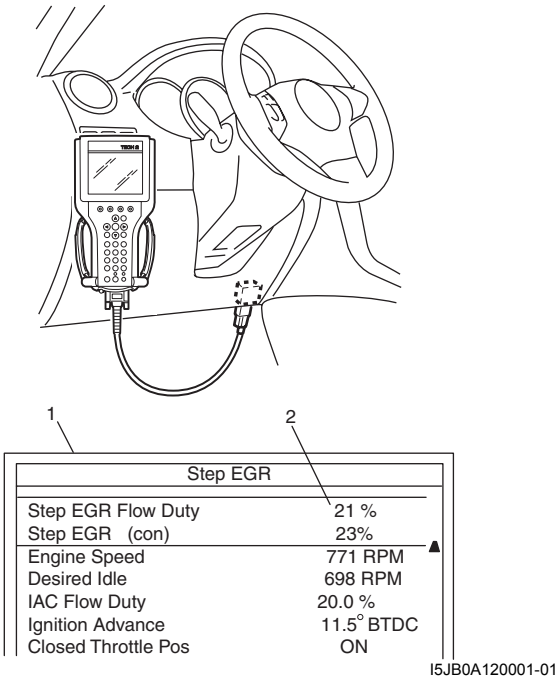


I5JB0A120001-01

| | |
|---|---|
| 1. | SUZUKI scan tool display |
| 2. | EGR valve opening (0: Close, 100: Full open) |

## Repair Instructions

### EVAP Canister Purge Inspection

S5JB0A1206001

**NOTE**

**Before inspection, check to make sure that gear shift lever is in neutral position (with A/T model, selector lever in “P” range) and that parking brake lever is pulled all the way up.**

1) Hoist vehicle.
2) Disconnect purge hose (1) from EVAP canister (2).
3) Place finger against the end of disconnected hose and check that vacuum is not felt there when engine is cool and running at idle speed. If check result is not satisfactory, check EVAP canister purge valve, wire harness and ECM.

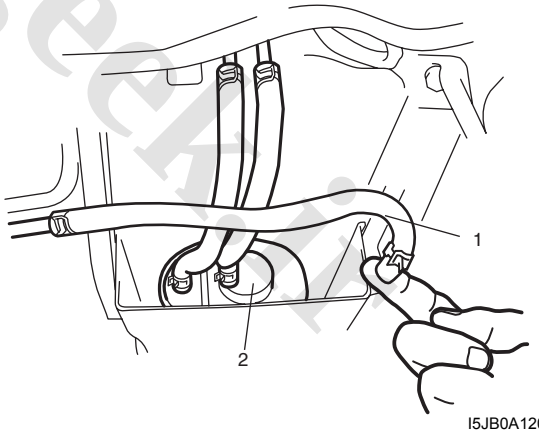


I5JB0A120002-01

www.cargeek.ir

www.CarGeek.ir


## EVAP Canister Purge Valve and Its Circuit Inspection

S5JB0A1206002

**⚠ WARNING**

**Do not apply vacuum by mouth; otherwise harmful fuel vapor can be breathed in.**

**⚠ CAUTION**

**Do not apply vacuum more than –86 kPa (–12.47 psi); otherwise EVAP canister purge valve could be damaged.**

1) Prepare to operate EVAP canister purge valve as follows.
   a) When using SUZUKI scan tool:
      i) Connect SUZUKI scan tool to DLC (1) with ignition switch turned OFF and disconnect purge valve vacuum hoses from intake manifold and purge pipe.
      ii) Turn ON ignition switch, clear DTC and select “MISC TEST” mode on SUZUKI scan tool.

      **Special tool**
      **(A): SUZUKI scan tool**

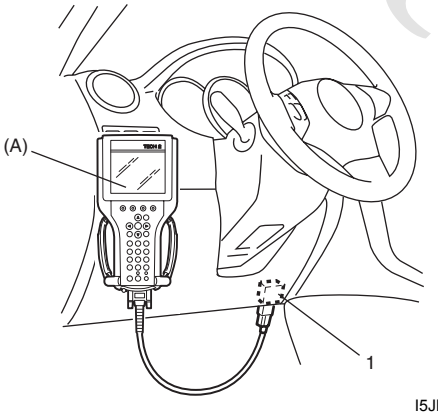


I5JB0A120003-01

   b) When not using SUZUKI scan tool:

**NOTE**

**Before performed this check, be sure to read the “Precautions of ECM Circuit Inspection: in Section 1A”.**

      i) Disconnect purge valve vacuum hoses from intake manifold and purge pipe.
      ii) Remove ECM cover.
      iii) Connect special tool between ECM and ECM connector referring to “Inspection of ECM and Its Circuits: in Section 1A”
      iv) Turn ON ignition switch.
      Using service wire, ground “C37-13” terminal circuit of special tool (valve ON: “B”) and unground it (valve OFF: “A”).

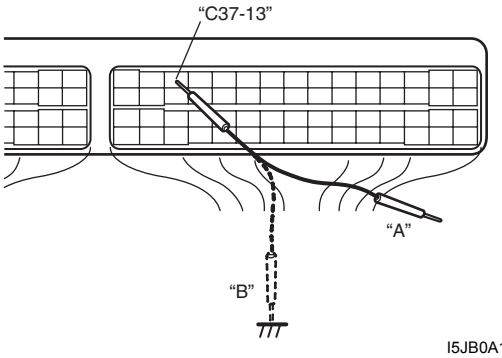


I5JB0A120004-01

2) Check purge valve (2) for operation and vacuum passage for clog when valve is switched ON and OFF by using SUZUKI scan tool or service wire.
   If check result is not satisfactory, check vacuum hoses, EVAP canister purge valve, wire harness and connections.

   **<u>EVAP canister purge valve specification</u>**
   **[C] Valve OFF: When vacuum (–60 kPa (–8.7 psi)) is applied to hose (1), vacuum can be applied.**
   **[D] Valve ON: When vacuum is applied to hose (1), vacuum can not be applied.**

   **Special tool**
   **(A): 09917–47011**

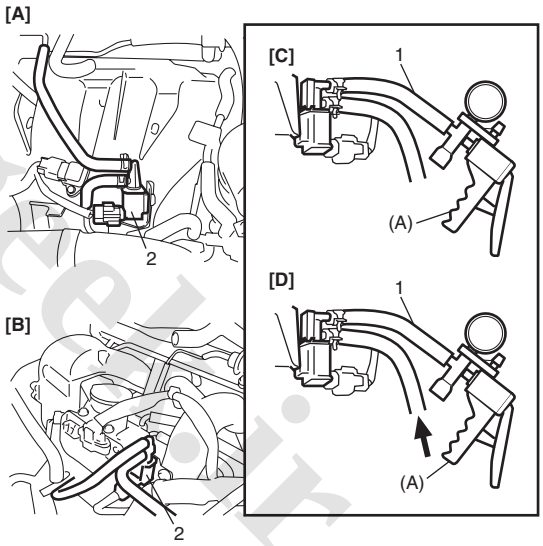


I5JB0A120005-01

| | |
|---|---|
| [A]: | For J20 engine |
| [B]: | For M16 engine |

## Vacuum Passage Inspection

S5JB0A1206003

Start engine and run it at idle speed. Disconnect vacuum hose (1) from EVAP canister purge valve (2). With finger placed against disconnected hose, check that vacuum is applied.
If it is not applied, clean vacuum passage by blowing compressed air.

www.cargeek.ir

www.CarGeek.ir

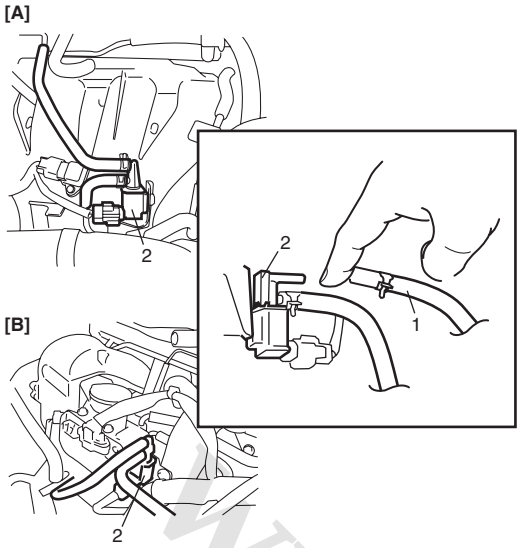


I5JB0A120006-01

| | |
|---|---|
| [A]: | For J20 engine |
| [B]: | For M16 engine |

## Vacuum Hose and Purge Valve Chamber Inspection

S5JB0A1206004

Check hoses and purge valve chamber for connection, leakage, clog and deterioration.
Replace as necessary.

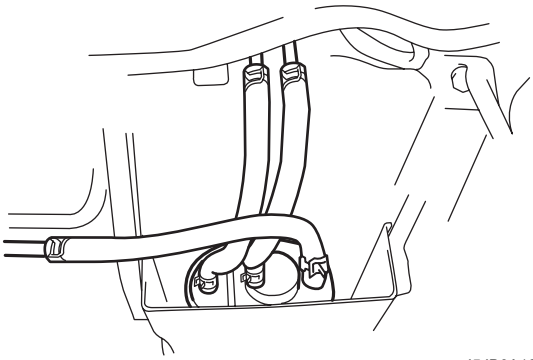

I5JB0A120007-01

## EVAP Canister Purge Valve Inspection

S5JB0A1206005

**⚠ WARNING**

**Do not apply vacuum by mouth; otherwise harmful fuel vapor can be breathed in.**

**⚠ CAUTION**

**Do not apply vacuum more than –86 kPa (–12.47 psi); otherwise EVAP canister purge valve could be damaged.**

1) With ignition switch turned OFF, disconnect coupler and vacuum hoses from canister purge valve.
2) Remove EVAP canister purge valve from intake manifold.
3) Check resistance between two terminals of EVAP canister purge valve.
   If resistance is not as specified, replace EVAP canister purge valve.

   **EVAP canister purge valve resistance**
   **30 – 34 Ω at 20 °C (68 °F)**

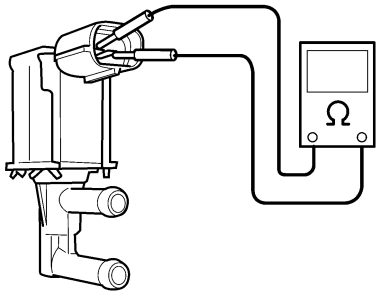


I3RM0A120008-01

4) With coupler disconnected, apply vacuum (–60 kPa (–8.7 psi)) to pipe (1). If vacuum can be applied, go to next step. If vacuum can not be applied, replace EVAP canister purge valve.
5) In this state, connect 12 V-battery to EVAP canister purge valve terminals. If vacuum can not be applied, EVAP canister purge valve is in good condition.
   If applied, replace EVAP canister purge valve.

**⚠ WARNING**

**Do not suck the air through valve. Fuel vapor inside valve is harmful.**

**Special tool**
**(A): 09917–47011**

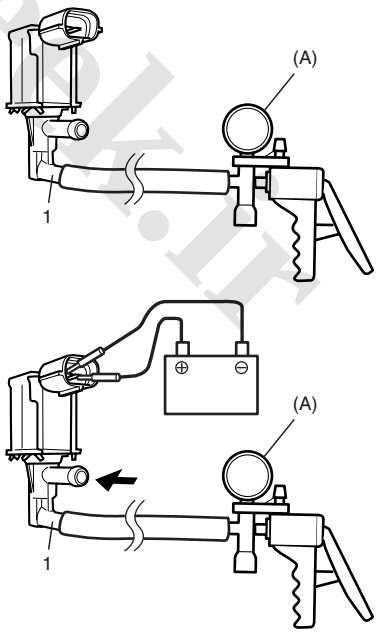


I3RB0A120007-01

6) Install EVAP canister purge valve to intake manifold.

www.cargeek.ir

www.CarGeek.ir


## EVAP Canister Inspection

S5JB0A1206006

**⚠ WARNING**

**Do not suck nozzles on EVAP canister. Fuel vapor inside EVAP canister is harmful.**

1) Check outside of EVAP canister visually.
2) Disconnect vacuum hoses from EVAP canister.
3) Check that there is no restriction of flow through purge pipe (1) and air pipe (2) when air is blown (4) into tank pipe (3).
   If any faulty condition is found in this inspection, replace EVAP canister.

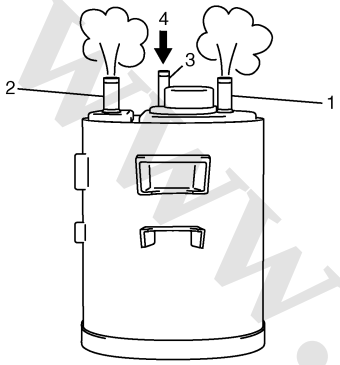


I2RH0B120001-01

## EGR Valve Removal and Installation

S5JB0A1206007

### Removal

1) Disconnect negative cable at battery.
2) Remove EGR pipe.
3) Disconnect EGR valve connector.
4) Remove EGR valve and gasket from cylinder head.

### Installation

Reverse removal procedure noting the following.

- Clean mating surface of valve and cylinder head.
- Use new gaskets.

## EGR Valve Inspection

S5JB0A1206008

1) Check resistance between following terminals of EGR valve (1) in each pair.
   If found faulty, replace EGR valve assembly.

   **EGR valve resistance (A – B, C – B, F – E, D – E terminal)**
   **20 – 24 Ω**

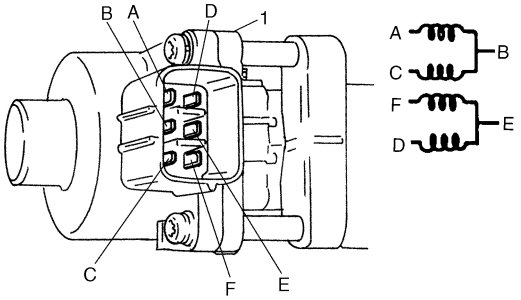


I2RH0B120005-01

2) Remove carbon from EGR valve gas passage.

**⚠ CAUTION**

**Do not use any sharp-edged tool to remove carbon.**
**Be careful not to damage or bend EGR valve (1), valve seat (3) and rod.**

3) Inspect valve (2), valve seat and rod for fault, cracks, bend or other damage.
   If found faulty, replace EGR valve assembly.

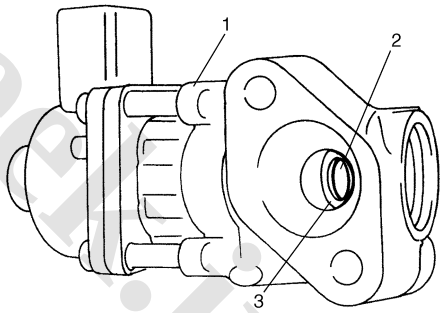


I2RH0B120006-01

## PCV Hose Inspection

S5JB0A1206009

**NOTE**

**Be sure to check that there is no obstruction in PCV valve or its hoses before checking IAC throttle opening, for obstructed PCV valve or hose hampers its accurate adjustment.**

Check hoses for connection, leakage, clog and deterioration.
Replace as necessary.

www.cargeek.ir

www.CarGeek.ir

## PCV Valve Removal and Installation

S5JB0A1206011

### Removal

1) Disconnect PCV hose from PCV valve.
2) Remove PCV valve from cylinder head cover.

### Installation

Reverse removal procedure noting the following.

- For J20 engine, apply sealant to thread part of PCV valve (1).

  **"A": Sealant 99000–31250**

- For J20 engine, tighten PCV valve to specified torque.

  **Tightening torque**
  **PCV valve (a): 27 N·m (2.7 kgf-m, 19.5 lb-ft)**

- Connect PCV hose to PCV valve securely.

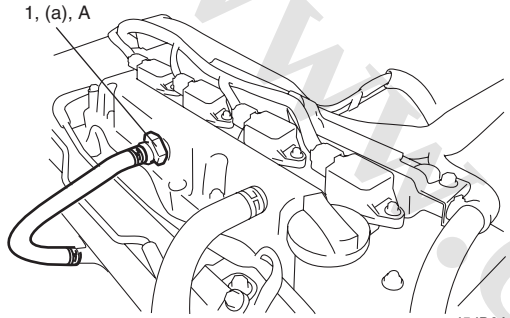


I5JB0A120008-01

## PCV Valve Inspection

S5JB0A1206010

**NOTE**

**Be sure to check that there is no obstruction in PCV valve or its hoses before checking IAC throttle opening, for obstructed PCV valve or hose hampers its accurate adjustment.**

1) Remove PCV valve referring to "PCV Valve Removal and Installation: "
2) Connect PCV valve to hose and install plug to cylinder head cover hole.
3) Run engine at idle.
4) Place your finger over end of PCV valve (1) to check for vacuum.
   If there is no vacuum, check for clogged valve.
   Replace as necessary.

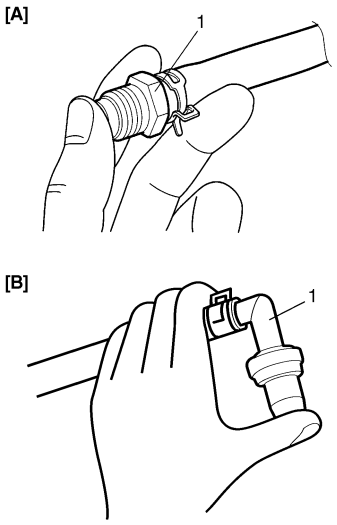


I5JB0A120009-04

| | |
|---|---|
| [A]: | For J20 engine |
| [B]: | For M16 engine |

5) After checking vacuum, stop engine and remove PCV valve (1).
   Shake valve and listen for rattle of check needle inside the valve. If valve does not rattle, replace PCV valve.

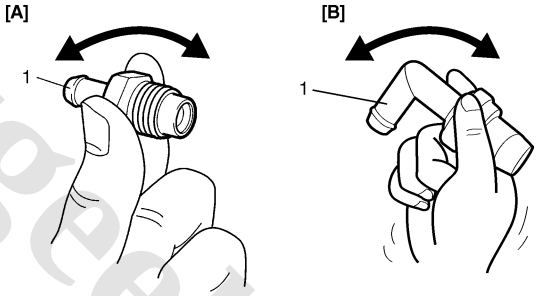


I5JB0A120010-03

| | |
|---|---|
| [A]: | For J20 engine |
| [B]: | For M16 engine |

6) After checking, remove plug and install PCV valve.
7) Install air cleaner assembly securely.

www.cargeek.ir

www.CarGeek.ir


# Specifications

## Tightening Torque Specifications

S5JB0A1207001

| Fastening part | Tightening torque | | | Note |
|---|---|---|---|---|
| | N·m | kgf-m | lb-ft | |
| PCV valve | 27 | 2.7 | 19.5 | ☞ |

**Reference:**
For the tightening torque of fastener not specified in this section, refer to “Fastener Information: in Section 0A”.

# Special Tools and Equipment

## Recommended Service Material

S5JB0A1208001

| Material | SUZUKI recommended product or Specification | | Note |
|---|---|---|---|
| Sealant | SUZUKI Bond No.1207F | P/No.: 99000–31250 | ☞ |

## Special Tool

S5JB0A1208002

| | | | |
|---|---|---|---|
| 09917–47011<br>Vacuum pump gauge<br>☞ / ☞ | 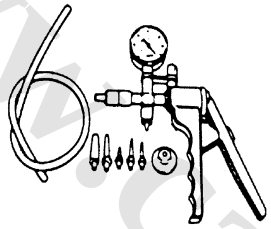 | SUZUKI scan tool<br>—<br>This kit includes following items. 1. Tech 2, 2. PCMCIA card, 3. DLC cable, 4. SAE 16/19 adapter, 5. Cigarette cable, 6. DLC loopback adapter, 7. Battery power cable, 8. RS232 cable, 9. RS232 adapter, 10. RS232 loop back connector, 11. Storage case, 12. Power supply ☞ | 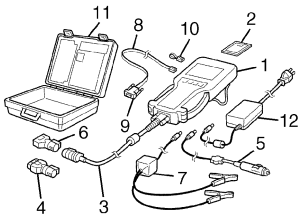 |

www.cargeek.ir

www.CarGeek.ir

# Engine Electrical Devices

## Repair Instructions

### Engine Control Module (ECM) Removal and Installation

S5JB0A1306004

**⚠ CAUTION**

**As ECM consists of precision parts, be careful not to expose it to excessive shock.**

**Removal**

1) Disconnect negative cable at battery.
2) Remove ECM cover.
3) Disconnect connectors from ECM as follows.
   a) Push lock (1) to release locking of lock lever (2).
   b) Turn lock lever to arrow direction until it stops.

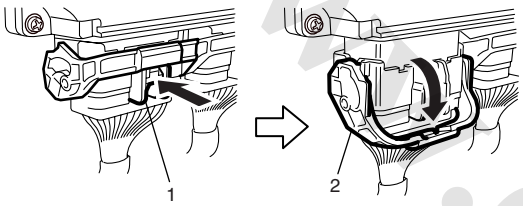


I4RS0A130003-01

4) Remove ECM (1) from its bracket by removing its mounting bolts (2).

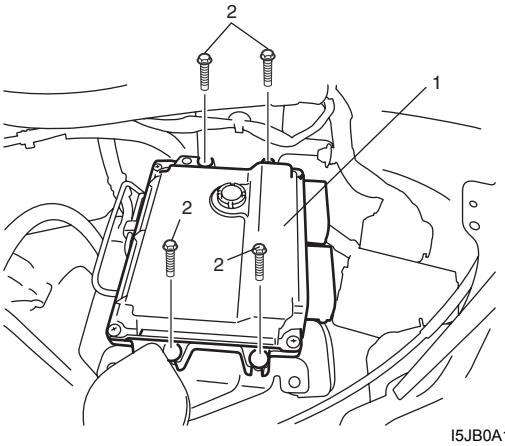


I5JB0A130012-03

**Installation**

Reverse removal procedure noting the following:

- Connect connectors to ECM as follows.
  a. Make sure that lock lever of ECM connector is unlock position.

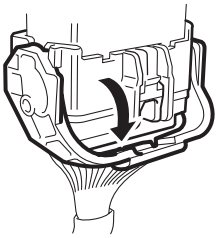

I4RS0B130021-01

b. Insert ECM connectors to ECM until it stops with unlocked lock lever.

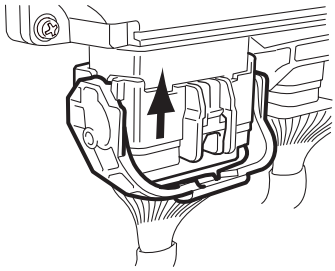

I4RS0B130022-01

c. Lock ECM connectors securely by pulling its lock lever up.

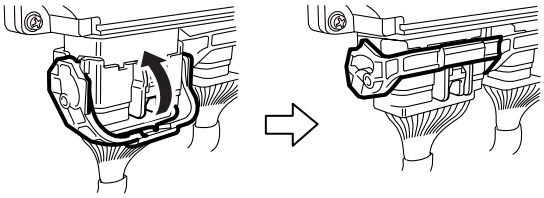

I4RS0A130004-01

### Manifold Absolute Pressure (MAP) Sensor Inspection

S5JB0A1306005

1) Disconnect connector from MAP sensor.
2) Remove MAP sensor from intake manifold.
3) Arrange 3 new 1.5 V batteries (2) in series (check that total voltage is 4.5 – 5.0 V) and connect its positive terminal to “Vin” terminal of sensor and negative terminal to “Ground” terminal. Then check voltage between “Vout” and “Ground”. Also, check if voltage reduces when vacuum is applied up to 400 mmHg by using vacuum pump (3).
   If check result is not satisfactory, replace MAP sensor (1).

**Output voltage (When input voltage is 4.5 – 5.5 V, ambient temp. 20 – 30 °C, 68 – 86 °F)**

| Altitude (Reference) | | Barometric pressure | | Output voltage |
|---|---|---|---|---|
| (ft) | (m) | (mmHg) | (kPa) | (V) |
| 0 – 2000 | 0 – 610 | 760 – 707 | 100 – 94 | 3.3 – 4.3 |
| 2001 – 5000 | 611 – 1524 | Under 707 over 634 | 94 – 85 | 3.0 – 4.1 |
| 5001 – 8000 | 1525 – 2438 | Under 634 over 567 | 85 – 76 | 2.7 – 3.7 |
| 8001 – 10000 | 2439 – 3048 | Under 567 over 526 | 76 – 70 | 2.5 – 3.3 |

www.cargeek.ir

www.CarGeek.ir


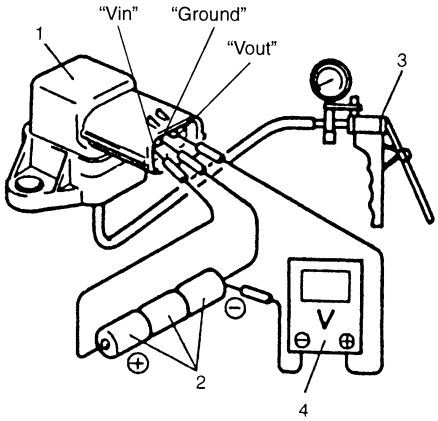


I3RM0A130005-01

| | |
|---|---|
| 4. | Voltmeter |

4) Install MAP sensor securely.
5) Connect MAP sensor connector securely.

## Electric Throttle Body Assembly On-Vehicle Inspection

S5JB0A1306022

**⚠ WARNING**

**Never touch throttle valve with finger while ignition switch is turned ON and accelerator pedal is depressed. Otherwise, injury may result by pinching the finger between throttle valve and throttle body housing.**

**⚠ CAUTION**

- **Do not disassemble electric throttle body assembly.**
- **Do not expose electric throttle body assembly to excessive shock like a dropping it. If electric throttle body assembly has been exposed to excessive shock, it should be replaced.**
- **Be careful not to accrete a foreign material (like dust and/or metallic particle) to the throttle body housing and/or throttle valve. Otherwise, the throttle body assembly is breaking down by throttle valve accretion.**
- **Do not apply excessive moving force to throttle valve for throttle valve operation check and/or TP sensor performance check.**
  **Otherwise, the throttle body assembly is breaking down by damaging the internal resinous gear of throttle valve actuator.**

### Throttle Valve Visual Check

1) Remove air cleaner outlet hose (for J20 engine) or air intake pipe (for M16 engine).
2) Check that there isn't any foreign matter caught between throttle valve and throttle body housing. If there is, take it out after removing throttle body referring to "Electric Throttle Body Assembly Removal and Installation: For J20 Engine in Section 1D" or "Electric Throttle Body Assembly Removal and Installation: For M16A Engine with VVT in Section 1D"and clean inside of throttle body thoroughly.

### Throttle Valve Operation Check

1) Remove air cleaner outlet hose (for J20 engine) or air intake pipe (for M16 engine).
2) Turn OFF ignition switch.
3) Move throttle valve with finger to its full open position and check that it moves smoothly.
4) Move throttle valve with finger to its completely closed position and check that it moves smoothly.

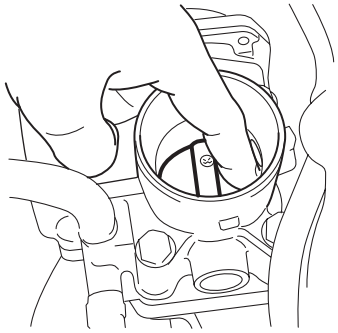

I5JB0A130013-01

5) Take off finger from throttle valve (1) which is at full open position and check that it moves smoothly by its return spring and open spring force back to default position (position where throttle valve is open by 7° (2) from completely closed position).
6) Take off finger from throttle valve (1) which is at completely closed position and check that it moves smoothly by its return spring and open spring force back to default position.

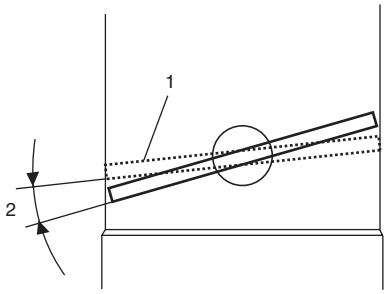


I5JB0A130035-01

If check result is not satisfactory, replace electric throttle body assembly.

www.cargeek.ir

www.CarGeek.ir

### Electric Throttle Body Assembly Operation Check

1) Remove air cleaner outlet hose (for J20 engine) or air intake pipe (for M16 engine).
2) Turn ON ignition switch.
3) Depress accelerator pedal gradually and check that throttle valve moves smoothly until it opens fully.
4) Release accelerator pedal depressed in Step 3) and check that throttle valve (1) moves back to default position (position where throttle valve is open by 7° (2) from its completely closed position).

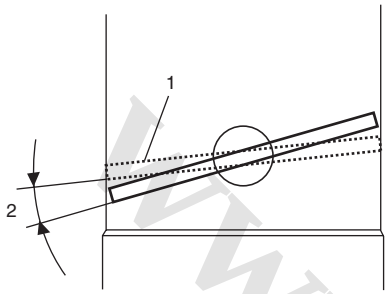

I5JB0A130035-01

If check result is satisfactory, electric throttle body system is in good condition. If check result is not satisfactory, proceed to next step.

5) Perform “Accelerator Pedal Position (APP) Sensor Assembly On-Vehicle Inspection”, “Throttle Actuator (Motor) Check” and “Throttle Position Sensor Performance Check”.
If check results are not satisfactory, replace electric throttle body assembly.
If check results are satisfactory, wire circuit and/or ECM are faulty.

### Throttle Actuator (Motor) Check

1) Turn OFF ignition switch.
2) Disconnect connector from electric throttle body assembly.
3) Measure resistance between “M1” terminal (1) and “M2” terminal (2) of electric throttle body assembly.
If measured resistance is out of specified value, replace electric throttle body assembly.

**<u>Throttle actuator (motor) resistance</u>**
**0.3 – 100 Ω at 20 °C, 68 °F**

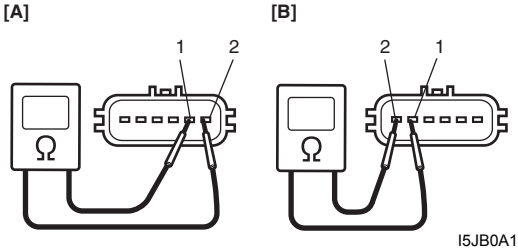

I5JB0A130014-01

| | |
|---|---|
| [A]: | For J20 engine |
| [B]: | For M16 engine |

### Throttle Position Sensor Performance Check

1) Remove air cleaner outlet hose (for J20 engine) or air intake pipe (for M16 engine).
2) Turn OFF ignition switch.
3) Disconnect connector from electric throttle body assembly.
4) Check throttle position sensor (main and sub) output voltage as following steps.
   a) For throttle position sensor (main), arrange 3 new 1.5 V batteries (1) in series (check that total voltage is 4.5 – 5.0 V) and connect its positive terminal to “Vin” terminal (2) and negative terminal to “Ground” terminal (3) of sensor. Then using voltmeter, connect positive terminal to “Vout 1” terminal (4) of sensor and negative terminal to battery.

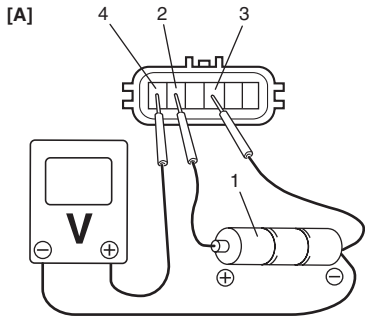


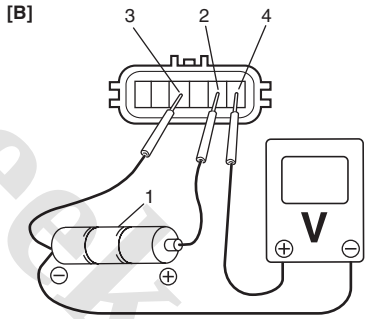

I5JB0A130015-01

| | |
|---|---|
| [A]: | For J20 engine |
| [B]: | For M16 engine |

   b) For throttle position sensor (sub), arrange 3 new 1.5 V batteries (1) in series (check that total voltage is 4.5 – 5.0 V) and connect its positive terminal to “Vin” terminal (2) and negative terminal to “Ground” terminal (3) of sensor. Then using voltmeter, connect positive terminal to “Vout 2” terminal (4) of sensor and negative terminal to battery.

www.cargeek.ir

www.CarGeek.ir


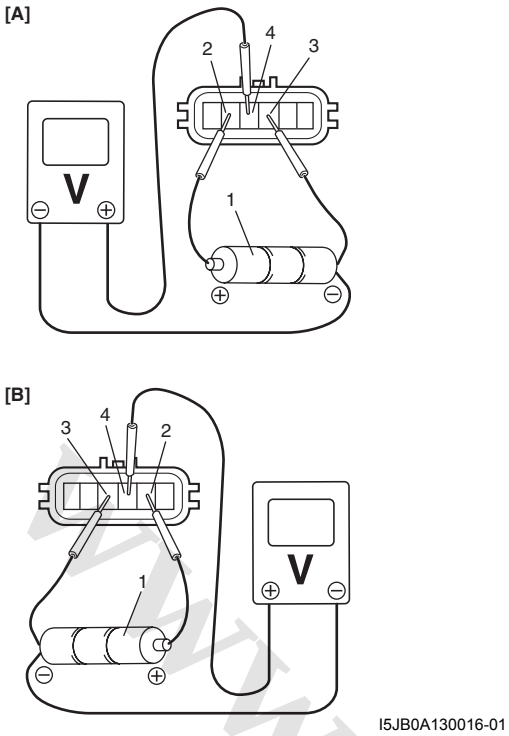


| | |
|---|---|
| [A]: | For J20 engine |
| [B]: | For M16 engine |

c) Measure output voltage variation while throttle valve is opened and closed as following specification.

If sensor voltage is out of specified value and linear variation as the following graph, replace electric throttle body assembly.

**Throttle position sensor output voltage**

**Throttle position sensor (main) [A]: 0.45 – 4.88 V, varying according to throttle valve opening by finger (Voltage should vary by 0.04 V for each 1° valve opening)**

**Throttle position sensor (sub) [B]: 1.33 – 5.007 V, varying according to throttle valve opening by finger (Voltage should vary by about 0.032 V for each 1° valve opening)**

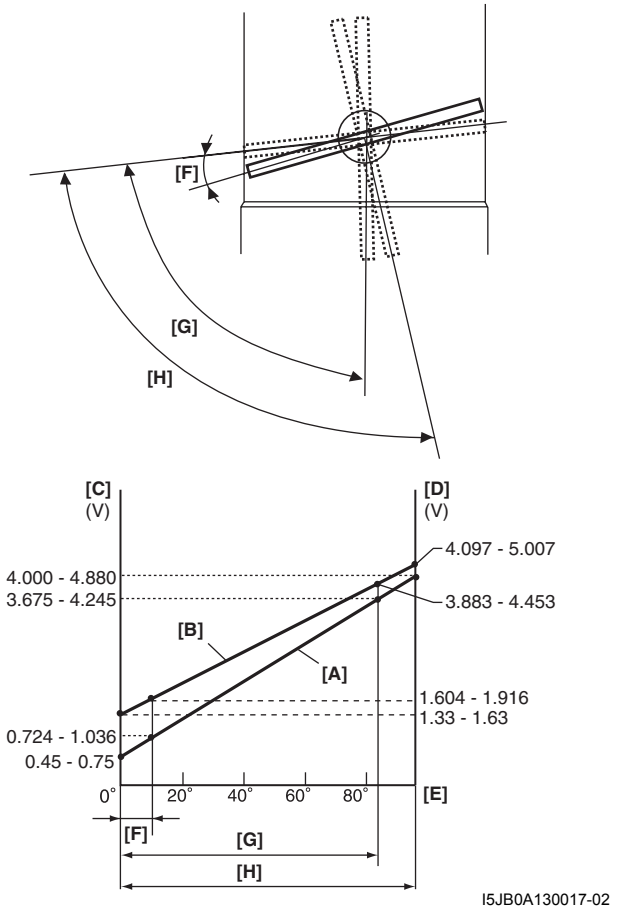


| | |
|---|---|
| [C]: | Throttle position sensor (main) output voltage |
| [D]: | Throttle position sensor (sub) output voltage |
| [E]: | Throttle valve opening |
| [F]: | Position where throttle valve is open by 7° from completely closed position (default position) |
| [G]: | Angle obtained when accelerator pedal is depressed fully (84°) |
| [H]: | Angle obtained when throttle valve is fully opened with finger (96°) |

## Electric Throttle Body System Calibration

S5JB0A1306023

**NOTE**

**If the service described under the "Precautions of Electric Throttle Body System Calibration: in Section 1A" is performed, calibrate electric throttle body system as follows.**

1) If electric throttle body assembly and/or accelerator pedal position (APP) sensor assembly are replaced, perform following steps.
   a) Disconnect negative cable at battery for 20 seconds or more for the purpose of clearing calibration data of closed throttle position from memory in ECM.
   b) Connect negative cable to battery.
2) Keep ignition switch at ON position for 5 seconds or more without running engine.

www.cargeek.ir

www.CarGeek.ir

## Accelerator Pedal Position (APP) Sensor Assembly On-Vehicle Inspection

S5JB0A1306024

1) Check that accelerator pedal position (APP) sensor assembly has been mounted to vehicle body properly (no pinched floor carpet, etc).
   If mounting is not properly, reinstall accelerator pedal position (APP) sensor assembly properly referring to “Accelerator Pedal Position (APP) Sensor Assembly Removal and Installation: ”.
2) Connect scan tool to DLC with ignition switch turned OFF.
3) Turn ON ignition switch and select “Data List” mode on scan tool.
4) Check that accelerator pedal position sensor voltage varies as the following graph.
   If sensor voltage is out of specified value or does not vary linearly as the following graph, check accelerator pedal position (APP) sensor assembly referring to “Accelerator Pedal Position (APP) Sensor Assembly Inspection: ”.

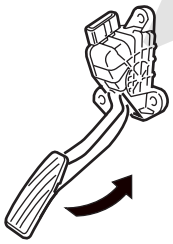

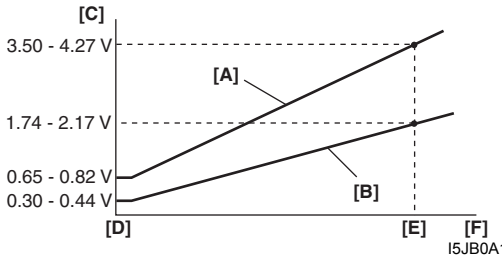


I5JB0A130018-05

| | |
|---|---|
| [A]: | Accelerator pedal position (APP) sensor (main) voltage |
| [B]: | Accelerator pedal position (APP) sensor (sub) voltage |
| [C]: | Sensor output voltage |
| [D]: | Idle position of accelerator pedal |
| [E]: | Full depressed position of accelerator pedal |
| [F]: | Pedal stroke |

## Accelerator Pedal Position (APP) Sensor Assembly Removal and Installation

S5JB0A1306027

**⚠ CAUTION**

- **Do not expose accelerator pedal position (APP) sensor assembly to excessive shock like a dropping it. If accelerator pedal position (APP) sensor assembly has been exposed to excessive shock, it should be replaced.**
- **Be careful not to expose sensor section of accelerator pedal position (APP) sensor assembly to water.**

**NOTE**

**After replacing accelerator pedal position (APP) sensor assembly, perform calibration of throttle valve referring to “Electric Throttle Body System Calibration: ”.**

### Removal

1) Disconnect negative cable at battery.
2) Disconnect connector from accelerator pedal position (APP) sensor assembly.
3) Remove accelerator pedal position (APP) sensor assembly from its bracket.

### Installation

Reverse removal procedure for installation noting the following.

- Tighten accelerator pedal position (APP) sensor assembly upper nut (1) first and then lower nuts (2) to specified torque.

  **Tightening torque**
  **Accelerator pedal position (APP) sensor assembly nut (a): 6.0 N·m (0.6 kgf-m, 4.5 lb-ft)**

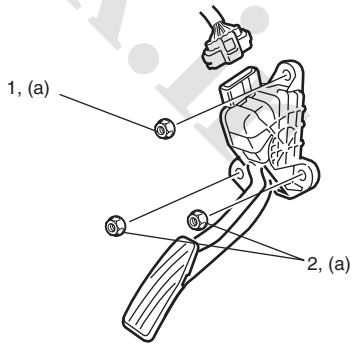


I5JB0A130036-01

- If APP sensor assembly bracket is removed, tighten its mounting nuts to specified torque

  **Tightening torque**
  **APP sensor assembly bracket nut: 6.0 N·m (0.6 kgf-m, 4.3 lb-ft)**

- Connect connector to accelerator pedal position (APP) sensor assembly securely.

www.cargeek.ir

www.CarGeek.ir


## Accelerator Pedal Position (APP) Sensor Assembly Inspection

S5JB0A1306026

Check accelerator pedal position (APP) sensor (main and sub) output voltage as following steps.

1) For accelerator pedal position (APP) sensor (main), arrange 3 new 1.5 V batteries (1) in series (check that total voltage is 4.7 – 5.0 V) and connect its positive terminal to “Vin 1” terminal (2) and negative terminal to “Ground 1” terminal (3) of sensor. Then using voltmeter, connect positive terminal to “Vout 1” terminal (4) of sensor and negative terminal to battery.

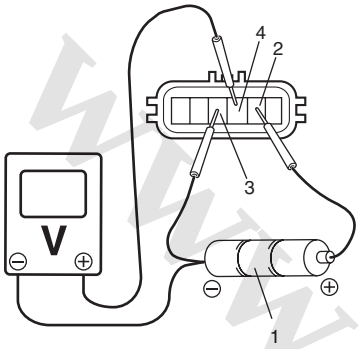


I5JB0A130019-01

2) For accelerator pedal position (APP) sensor (sub), arrange 3 new 1.5 V batteries (1) in series (check that total voltage is 4.7 – 5.0 V) and connect its positive terminal to “Vin 2” terminal (2) and negative terminal to “Ground 2” terminal (3) of sensor. Then using voltmeter, connect positive terminal to “Vout 2” terminal (4) of sensor and negative terminal to battery.

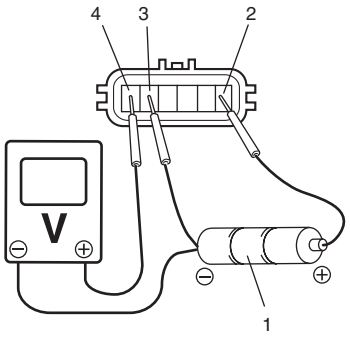


I5JB0A130020-01

3) Measure output voltage variation while accelerator pedal is no depressed and fully depressed as following specification.

If sensor voltage is out of specified value or does not vary linearly as the following graph, replace accelerator pedal position (APP) sensor assembly.

**<u>Accelerator pedal position (APP) sensor output voltage</u>**

**Accelerator pedal position (APP) sensor (main) output voltage [A]: 0.82 – 3.50 V, varying according to depressed extent of accelerator pedal**

**Accelerator pedal position (APP) sensor (sub) output voltage [B]: 0.44 – 1.74 V, varying according to depressed extent of accelerator pedal**

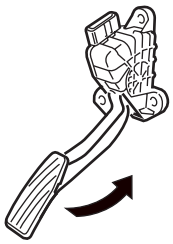

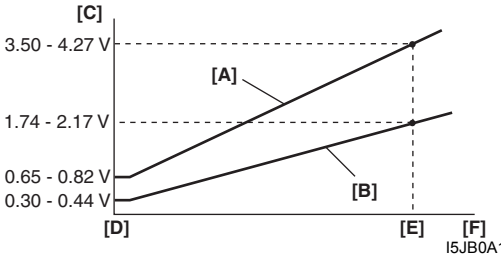


I5JB0A130021-05

| | |
|---|---|
| [C]: | Sensor output voltage |
| [D]: | Idle position of accelerator pedal |
| [E]: | Fully depressed position of accelerator pedal |
| [F]: | Pedal stroke |

## Engine Coolant Temperature (ECT) Sensor Removal and Installation

S5JB0A1306008

### Removal

1) Disconnect negative cable at battery.
2) Drain coolant referring to “Cooling System Draining: in Section 1F”.

**⚠ WARNING**

**To avoid danger of being burned, do not remove radiator cap while engine and radiator are still hot.**
**Scalding fluid and steam can be blown out under pressure if cap is taken off too soon.**

3) Disconnect connector from ECT sensor (1).

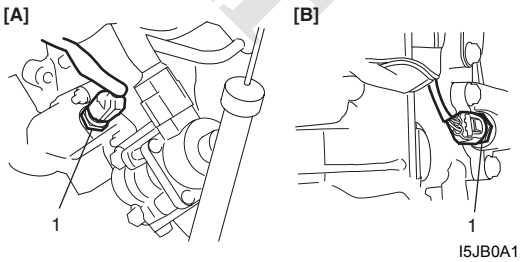


I5JB0A130022-03

| | |
|---|---|
| [A]: | For J20 engine |
| [B]: | For M16 engine |

4) Remove ECT sensor from water outlet cap.

www.cargeek.ir

www.CarGeek.ir

### Installation

Reverse removal procedure noting the following.

- Clean mating surfaces of ECT sensor and water outlet cap.
- Check O-ring for damage and replace, if necessary.
- Tighten ECT sensor (1) to specified torque.

**Tightening torque**
**ECT sensor (a): 12.5 N·m (1.25 kgf-m, 9.0 lb-ft)**

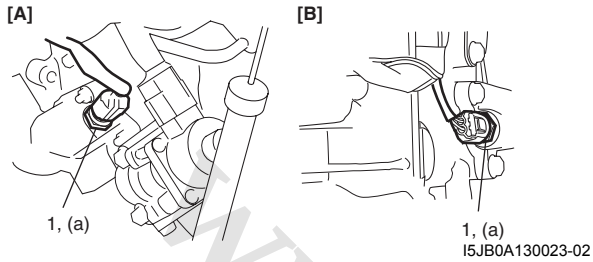


| | |
|---|---|
| [A]: | For J20 engine |
| [B]: | For M16 engine |

- Connect connector to ECT sensor securely.
- Refill coolant referring to “Cooling System Flush and Refill: in Section 1F”.

## Engine Coolant Temperature (ECT) Sensor Inspection

S5JB0A1306009

Immerse temperature sensing part of ECT sensor in water (or ice) and measure resistance between sensor terminals while heating water gradually.
If measured resistance doesn’t show such characteristic as shown, replace ECT sensor.

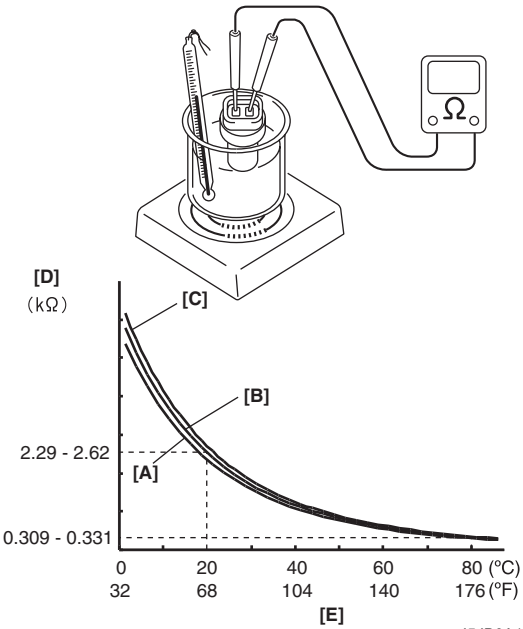


| | |
|---|---|
| [A]: Lower limit | [D]: Resistance |
| [B]: Normal | [E]: Temperature |
| [C]: Upper limit | |

## Air Fuel Ratio (A/F) Sensor On-Vehicle Inspection

S5JB0A1306028

### Heater

1) Disconnect A/F sensor connector.
2) Using ohmmeter, measure resistance of Sensor heater between terminals “$V_B$” and “GND” at sensor connector. If found faulty, replace A/F sensor.

**NOTE**

**Temperature of sensor affects resistance value largely. Make sure that sensor heater is at correct temperature.**

**A/F sensor heater resistance**
**2 – 3 Ω at 20 °C (68 °F)**

**Viewed from terminal side**

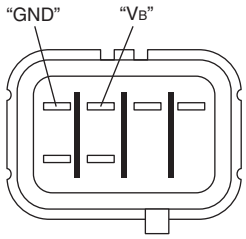


3) Connect A/F sensor connector securely.

### Adjusting Resistor

1) Disconnect A/F sensor connector.
2) Using ohmmeter, measure resistance of adjusting resistor between terminals “R+” and “R–” at A/F sensor connector.
If found faulty, replace A/F sensor.

**Adjusting resistor resistance**
**100 – 58000 Ω at 20 °C (68 °F)**

**Viewed from terminal side**

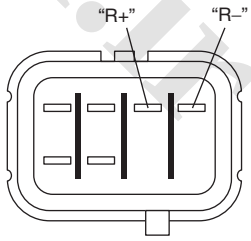


3) Connect A/F sensor connector securely.

www.cargeek.ir

www.CarGeek.ir


## Heated Oxygen Sensor (HO2S-2) Heater On-Vehicle Inspection

S5JB0A1306010

1) Disconnect sensor connector.
2) Using ohmmeter, measure resistance of sensor heater between terminals "$V_B$" and "GND" at sensor connector.
   If found faulty, replace oxygen sensor.

**NOTE**

**Temperature of sensor affects resistance value largely. Make sure that sensor heater is at correct temperature.**

**HO2S heater resistance**
**5.0 – 6.4 Ω at 20 °C (68 °F)**

**Viewed from terminal side**

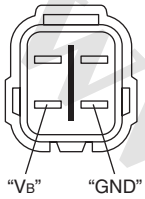


I5JB0A130024-03

3) Connect sensor connector securely.

## Air Fuel Ratio (A/F) Sensor, Heated Oxygen Sensor (HO2S-2) Removal and Installation

S5JB0A1306011

### Removal

**⚠ WARNING**

**To avoid danger of being burned, do not touch exhaust system when system is hot. A/F sensor and/or oxygen sensor removal should be performed when system is cool.**

1) Disconnect negative cable at battery.
2) Disconnect connector of A/F sensor and/or heated oxygen sensor.
3) Remove A/F sensor (1) and/or heated oxygen sensor (2) from exhaust No.1 pipe.

### Installation

Reverse removal procedure noting the following.

- Tighten A/F sensor (1) to specified torque.

  **Tightening torque**
  **A/F sensor (a): 45 N·m (4.5 kgf-m, 32.5 lb-ft)**

- Tighten heated oxygen sensor (2) to specified torque.

  **Tightening torque**
  **Heated oxygen sensor (b): 45 N·m (4.5 kgf-m, 32.5 lb-ft)**

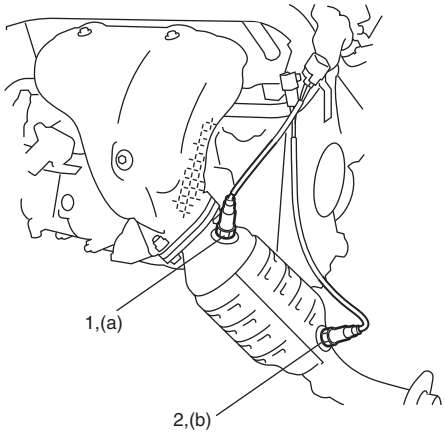


I5JB0A130025-02

## Camshaft Position (CMP) Sensor Removal and Installation

S5JB0A1306013

### Removal

1) Disconnect negative cable at battery.
2) Disconnect connector from CMP sensor.
3) Remove camshaft position sensor from cylinder head cover (for J20 engine) or cylinder head (for M16 engine).

### Installation

1) Install camshaft position sensor to cylinder head cover (for J20 engine) or cylinder head (for M16 engine).

   **Tightening torque**
   **CMP sensor bolt (a): 11 N·m (1.1 kgf-m, 8.0 lb-ft)**

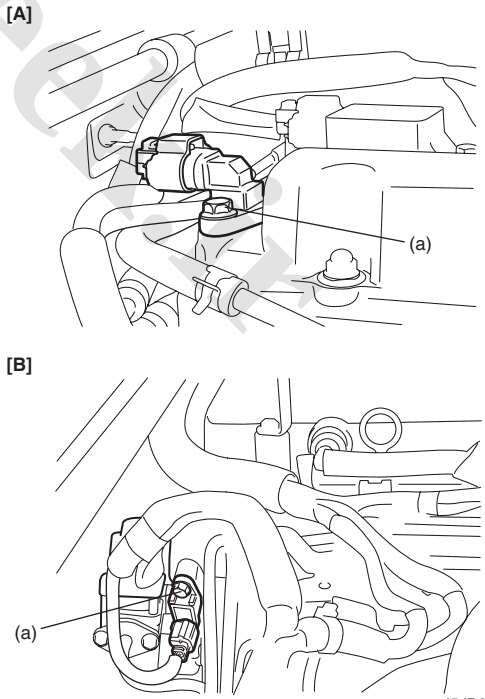


I5JB0A130026-03

| | |
|---|---|
| [A]: | For J20 engine |
| [B]: | For M16 engine |

www.cargeek.ir

www.CarGeek.ir

2) Connect connector to CMP sensor securely.
3) Connect negative cable to battery.

## Camshaft Position (CMP) Sensor Inspection

S5JB0A1306012

### Visual check

- Check that O-ring is free from damage.
- Check that end face of sensor and signal rotor tooth are free from any metal particles and damage.

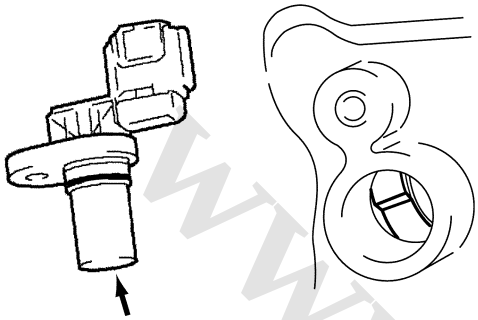

I4RS0B130015-01

### Performance check

1) Remove metal particles on end face of CMP sensor, if any.
2) Arrange 12 V battery (1) and connect its positive terminal to “Vin” terminal (2) and negative terminal to “Ground” terminal (3) of sensor. Then using ohmmeter, measure resistance between “Vout” terminal (4) of sensor and negative terminal of battery by passing magnetic substance (iron) (5) while keeping approximately 1 mm (0.03 in.) gap with respect to end face of CMP sensor.
   If resistance does not vary as specified below, replace CMP sensor.

**CMP sensor resistance**

**Resistance varies from less than 220 Ω (ON) to infinity (OFF) or from infinity (OFF) to less than 220 Ω (ON)**

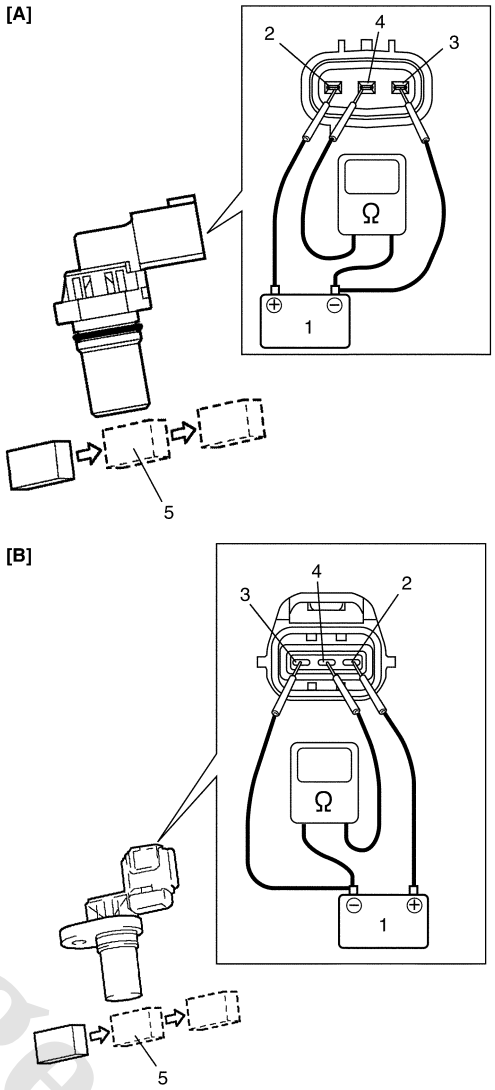


I5JB0A130027-01

| | |
|---|---|
| [A]: | For J20 engine |
| [B]: | For M16 engine |

## Crankshaft Position (CKP) Sensor Removal and Installation

S5JB0A1306015

### For J20 Engine

### Removal

1) Remove transmission assembly from vehicle referring to “Automatic Transmission Assembly Dismounting and Remounting: in Section 5A” or “Manual Transmission Assembly Dismounting and Remounting: in Section 5B”.
2) Remove drive plate or flywheel from crankshaft.
3) Disconnect connector from crankshaft position sensor.
4) Remove crankshaft position sensor (1) from cylinder block (2).

www.cargeek.ir

www.CarGeek.ir


**Installation**

Reverse removal procedure noting the following.

- Apply engine oil to O-ring of sensor.
- Tighten CKP sensor bolt to specified torque.

**Tightening torque**
**CKP sensor bolt (a): 11 N·m (1.1 kgf-m, 8.0 lb-ft)**

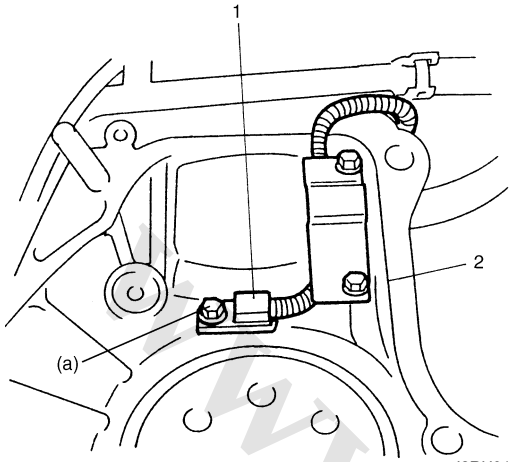

I2RH01130021-01

- Connect connector and fix wire harness with clamp securely.

**For M16 Engine**

**Removal**

1) Disconnect negative cable at battery.
2) Remove generator drive belt, loosen pivot bolt and move generator outward.
3) Disconnect connector from crankshaft position sensor.
4) Remove crankshaft position sensor (1) from cylinder block.

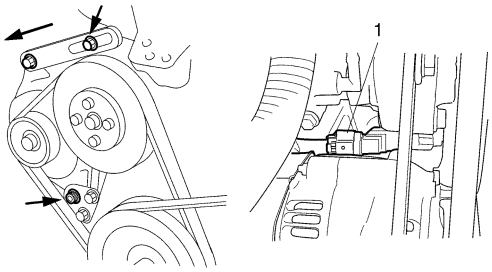

I2RH0B130012-01

**Installation**

1) Install crankshaft position sensor to cylinder block. Tighten CKP sensor bolt to specified torque.

**Tightening torque**
**CKP sensor bolt (a): 10 N·m (1.0 kgf-m, 7.5 lb-ft)**

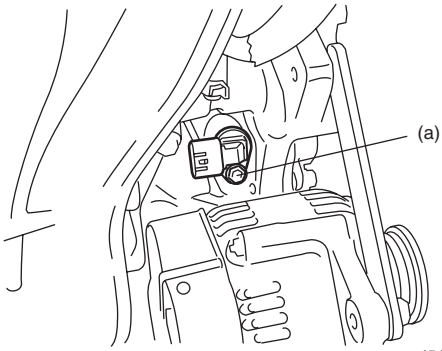

I5JB0A130028-01

2) Connect connector to CKP sensor securely.
3) Adjust generator drive belt tension referring to “Water Pump and Generator Drive Belt Tension Inspection and Adjustment (For M16 Engine): in Section 1J”.
4) Connect negative cable to battery.

## Crankshaft Position (CKP) Sensor Inspection

S5JB0A1306014

**For J20 Engine**

**Waveform Check**

Using oscilloscope, check that CKP sensor signal is outputted properly referring to “Reference waveform No.20” and “Reference waveform No.21” of “Inspection of ECM and Its Circuits: in Section 1A”.
If sensor signal is outputted properly, CKP sensor is in good condition.

**Visual check**

- Check that O-ring is free from damage.
- Check that end face of sensor and signal plate tooth are free from any metal particles and damage.

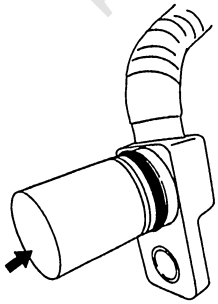
I5JB0A130003-01

www.cargeek.ir

www.CarGeek.ir

**Resistance check**
Measure resistance between “1” and “2” terminals of CKP sensor.

**CKP sensor resistance**
**480 – 660 Ω at 20 °C, 68 °F**

If measured resistance is out of specified value, replace CKP sensor.

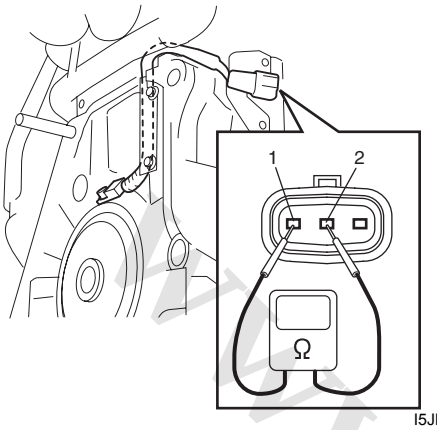

I5JB0A130004-01

**For M16 Engine**

**Visual check**
- Check that O-ring is free from damage.
- Check that end face of sensor and signal pulley tooth are free from any metal particles and damage.

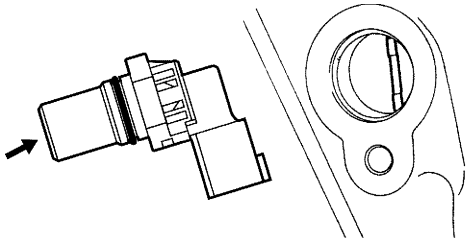
I3RB0A130006-01

**Performance check**
1) Remove metal particles on end face of CKP sensor, if any.
2) Arrange 12 V battery (1) and connect its positive terminal to “Vin” terminal (2) and negative terminal to “Ground” terminal (3) of sensor. Then using ohmmeter, measure resistance between “Vout” terminal (4) of sensor and negative terminal of battery by passing magnetic substance (iron) (5) while keeping approximately 1 mm (0.03 in.) gap with respect to end face of CKP sensor.
   If resistance does not vary as specified below, replace CKP sensor.

**CKP sensor resistance**
**Resistance varies from less than 220 Ω (ON) to infinity (OFF) or from infinity (OFF) to less than 220 Ω (ON)**

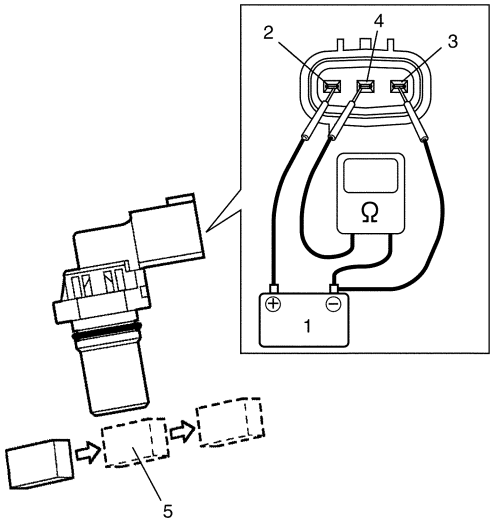

I4RS0B130017-01

## Knock Sensor Removal and Installation
S5JB0A1306017

**Removal**
1) Disconnect negative cable at battery.
2) Hoist vehicle.
3) For M16 engine, remove starting motor referring to “Starting Motor Dismounting and Remounting: in Section 1I”.
4) Disconnect knock sensor connector (1).
5) Remove knock sensor (2) from cylinder block.

**Installation**
Reverse removal procedure for installation.

**Tightening torque**
**Knock sensor (a): 22 N·m (2.2 kgf-m, 16.0 lb-ft)**

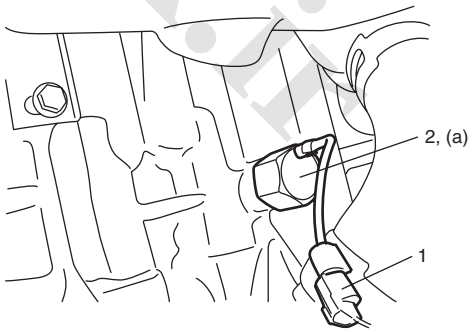

I5JB0A130029-02

www.cargeek.ir

## Control Relay Inspection

S5JB0A1306018

### Control Relay

1) Disconnect negative cable at battery.
2) Remove main relay (1), fuel pump relay (3), starting motor control relay (2), throttle actuator control relay (4) and HO2S heater relay (5) (for M16 engine) from fuse box No.2 (6) and/or relay box (7).
3) Check that there is no continuity between terminal “C” and “D”. If there is continuity, replace relay.
4) Connect battery positive (+) terminal to terminal “B” of relay. Connect battery negative (–) terminal to terminal “A” of relay. Check for continuity between terminal “C” and “D”. If there is no continuity when relay is connected to the battery, replace relay.

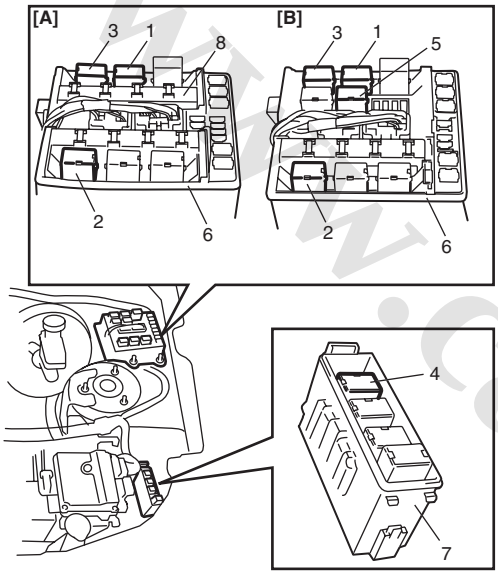


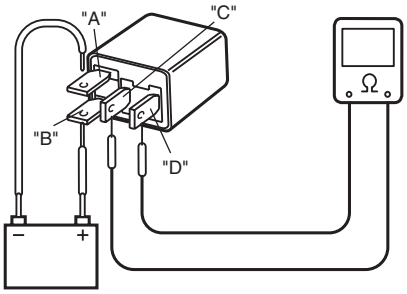


I5JB0A130030-02

| | |
|---|---|
| [A]: | For J20 engine |
| [B]: | For M16 engine |
| 8. | Integration relay No.2 |

### Integration Relay No.2 (For J20 Engine)

1) Disconnect negative cable at battery.
2) Remove included in integration relay No.2 (1) from fuse box No.2 (2).

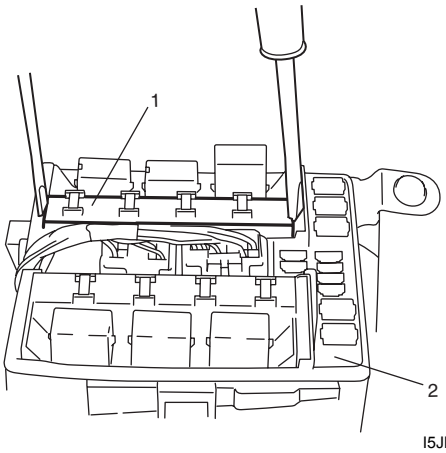


I5JB0A130031-02

3) Check that there is no continuity between terminals “E41-1” and “E37-8” of relay.
   If there is continuity, replace relay.
4) Connect battery positive (+) terminal to “E37-7” terminal of relay. Connect battery negative (–) terminal to “E37-6” terminal of relay. Check for continuity between terminal “E41-1” and “E37-8”. If there is no continuity when relay is connected to the battery, replace integration relay No.2.

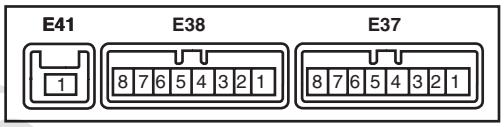


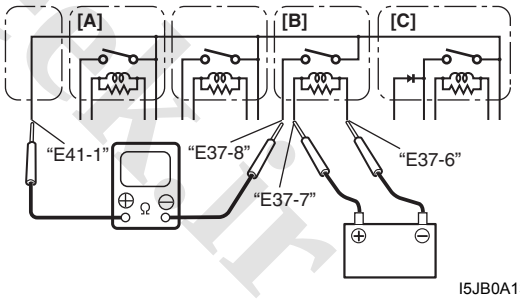


I5JB0A130032-02

| | |
|---|---|
| [A]: | A/T relay |
| [B]: | HO2S heater relay |
| [C]: | Compressor relay |

www.cargeek.ir

www.CarGeek.ir

## Mass Air Flow (MAF) and Intake Air Temperature (IAT) Sensor On-Vehicle Inspection

S5JB0A1306019

**NOTE**

**Before performed this inspection, be sure to read the "Precautions of ECM Circuit Inspection: in Section 1A".**

1) Disconnect MAF and IAT sensor connector.
2) Connect voltmeter to "BLU/BLK" wire terminal (2) of MAF and IAT sensor connector (1) disconnected and ground.

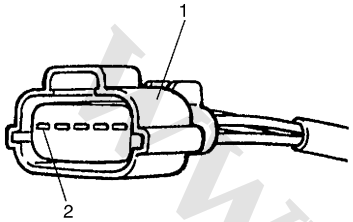


I3RB0A130009-01

3) Turn ON ignition switch and check that voltage is battery voltage.
   If not, check if wire harness is open or connection is poor.
4) Turn OFF ignition switch and connect connector to MAF and IAT sensor.
5) Connect special tool between ECM and ECM connector referring to "Inspection of ECM and Its Circuits: in Section 1A"
6) Turn ON ignition switch and check MAF signal voltage between "C37-26" terminal circuit and "C37-27" terminal circuit of special tool.

   **MAF signal voltage between "C37-26" terminal circuit and "C37-27" terminal circuit of special tool**
   **MAF signal voltage of MAF and IAT sensor with ignition switch turned ON: 0.5 – 1.0 V**

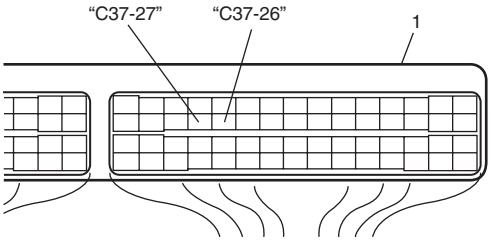


I4RS0A130009-01

| |
|---|
| 1. ECM |

7) Start engine and check that voltage is lower than 5 V and it rises as engine speed increases.

   **MAF signal voltage between "C37-26" terminal circuit and "C37-27" terminal circuit of special tool**
   **MAF signal reference voltage of MAF and IAT sensor at specified Idle speed: 1.3 – 1.8 V**

8) If check result is not as specified above, cause may lie in wire harness, connector connection, MAF and IAT sensor or ECM.

## Mass Air Flow (MAF) and Intake Air Temperature (IAT) Sensor Removal and Installation

S5JB0A1306020

**⚠ CAUTION**

- **Do not disassemble MAF and IAT sensor.**
- **Do not expose MAF and IAT sensor to any shock.**
- **Do not clean MAF and IAT sensor.**
- **If MAF and IAT sensor has been dropped, it should be replaced.**
- **Do not blow compressed air by using air gun or the like.**
- **Do not put finger or any other object into MAF and IAT sensor. Malfunction may occur.**

**Removal**

1) Disconnect negative cable at battery.
2) Disconnect MAF and IAT sensor connector.
3) Remove MAF and IAT sensor (1) from air cleaner case.

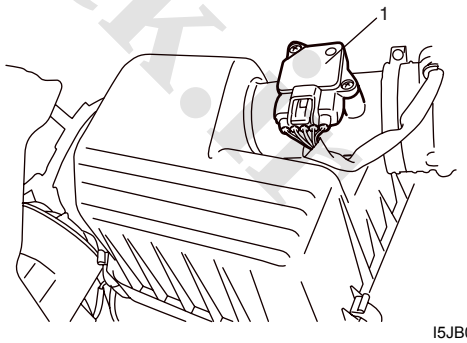


I5JB0A130033-02

www.cargeek.ir

www.CarGeek.ir


**Installation**

Reverse removal procedure noting the followings.

- Tighten MAF and IAT sensor screws to specified torque.

  **Tightening torque**
  **MAF and IAT sensor screw (a): 1.5 N·m (0.15 kgf-m, 1.1 lb-ft)**

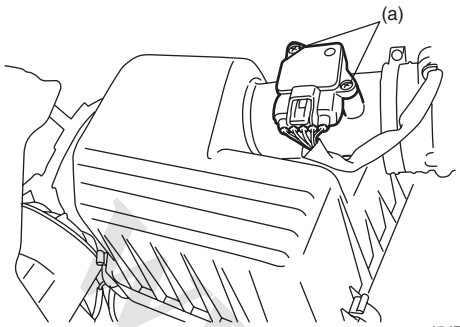


I5JB0A130034-02

- Connect MAF and IAT sensor connector securely.

## Mass Air Flow (MAF) and Intake Air Temperature (IAT) Sensor Inspection

S5JB0A1306021

**⚠ CAUTION**

**Do not heat up MAF and IAT sensor more than 100 °C (212 °F). Otherwise, MAF and IAT sensor will be damaged.**

- Check sensor O-ring (1) for damage and deterioration. Replace as necessary.
- Blow hot air to temperature sensing part (2) of MAF and IAT sensor (3) using hot air drier (4) and measure resistance between sensor terminals while heating air gradually.
  If measured resistance does not show such characteristic as shown, replace MAF and IAT sensor.

  **Intake air temperature sensor resistance**
  **–20 °C (–4 °F): 13.6 – 18.4 kΩ**
  **20 °C (68 °F): 2.21 – 2.69 kΩ**
  **60 °C (140 °F): 0.493 – 0.667 kΩ**

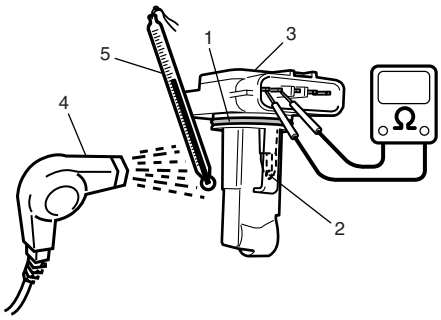


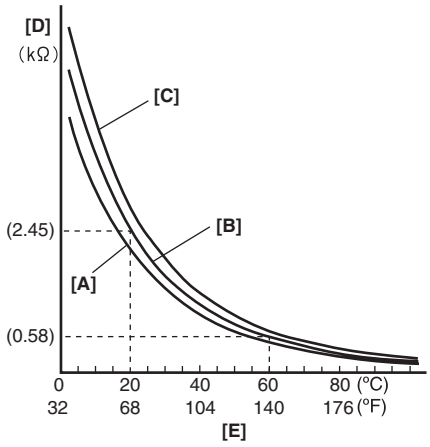


I4RS0A130012-01

| | |
|---|---|
| [A]: | Lower limit |
| [B]: | Nominal |
| [C]: | Upper limit |
| [D]: | Resistance |
| [E]: | Temperature |
| 5. | Temperature gauge |

## Vacuum Tank Assembly Inspection (For J20 Engine)

S5JB0A1306030

**⚠ CAUTION**

**Do not apply vacuum more than –86 kPa (–12.47 psi); otherwise intake manifold tuning vacuum solenoid valve and vacuum tank could be damaged.**

**Intake manifold tuning vacuum solenoid valve**

1) With ignition switch OFF, disconnect connector from vacuum solenoid valve.

www.cargeek.ir

www.CarGeek.ir

2) Check resistance of intake manifold tuning vacuum solenoid valve.
If resistance is as specified, proceed to next operation check. If not, replace intake manifold tuning vacuum solenoid valve.

**Resistance of intake manifold tuning vacuum solenoid valve**
**Between two terminals: 33 – 39 Ω at 20 °C (68 °F)**

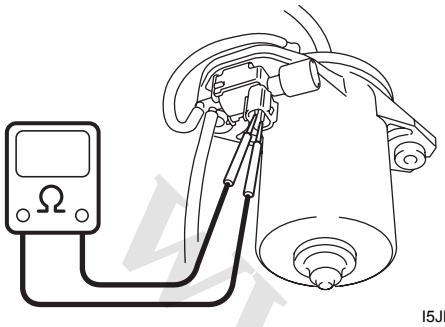

I5JB0A130005-01

3) Disconnect vacuum hoses (1 and 2) from intake manifold tuning valve and vacuum tank.
4) With connector disconnected, apply vacuum (–53 kPa (– 7.69 psi) to –67 kPa (–9.72 psi)) to hose (2). Vacuum is maintained.

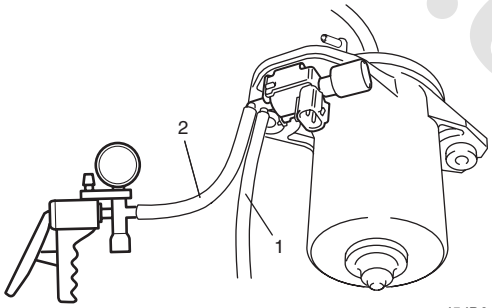

I5JB0A130006-01

5) With connector disconnected, apply vacuum to hose (1). Air goes into nozzle (2).

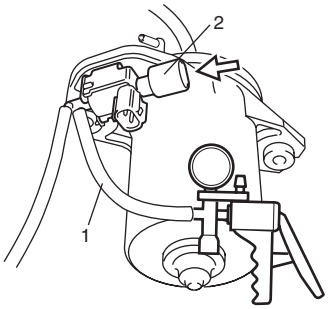

I5JB0A130007-01

6) Connect 12 V-battery to intake manifold tuning vacuum solenoid valve terminals. In this state, apply vacuum to hose (2). Air goes into hose (1).
If check result is not as described, replace intake manifold tuning vacuum solenoid valve.

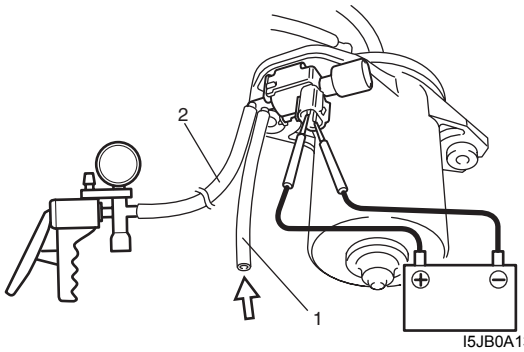

I5JB0A130008-01

7) Connect vacuum hoses to intake manifold tuning valve and vacuum tank.
8) Connect intake manifold tuning vacuum solenoid valve connector securely.

**Vacuum Tank**

1) Check outside of vacuum tank for damage visually.
2) Disconnect vacuum hoses from intake manifold and intake manifold tuning vacuum solenoid valve.
3) Check vacuum passage of vacuum tank for clog and leakage as follows by using vacuum pump.
   a) When applying vacuum (– 53 kPa (– 7.69 psi) to – 67 kPa (–9.72 psi)) to hose (1), vacuum is maintained (there is no leakage): [A]
   b) When applying vacuum to hose (2), vacuum is not maintained: [B]
   If check result is not described, replace vacuum tank assembly.

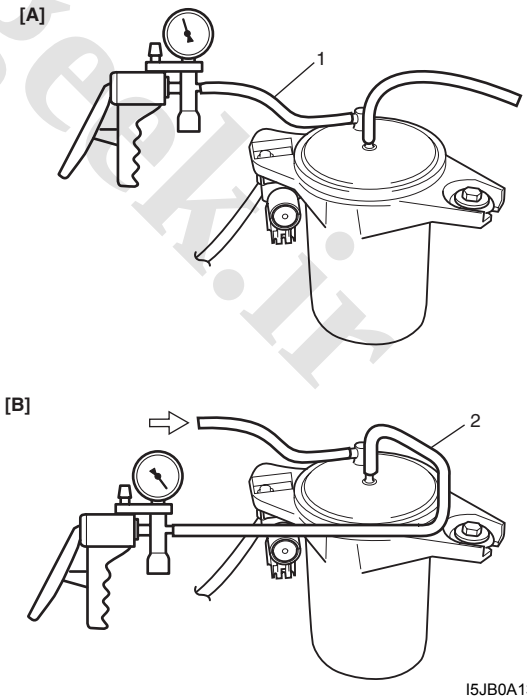

I5JB0A130009-01

4) Connect vacuum hoses to intake manifold and intake manifold tuning vacuum solenoid valve.

www.cargeek.ir

www.CarGeek.ir


## Electric Load Current Sensor On-Vehicle Inspection (For J20 Engine)

S5JB0A1306031

### Using SUZUKI Scan Tool

1) Connect scan tool to DLC with ignition switch turned OFF.
2) Check “Battery Current” displayed on scan tool at following condition.

**Battery current**
**Ignition switch ON: 5.0 – 6.0 A**
**Run engine at 2000 rpm, headlight ON: 19.0 – 23.0 A**
**Run engine at 2000 rpm, headlight ON and blower motor switch is HI position: 37.0 – 42.0 A**

If check result is satisfactory, electric load current sensor is in good condition.
If check result is not satisfactory, check the following parts and circuit.

- Electric load current sensor circuit (power, ground and output)
- Following charging system components
  - Battery (refer to “Battery Inspection: in Section 1J”)
  - Generator (refer to “Generator Inspection: in Section 1J”)
  - Generator output control circuit (refer to “Generator Test (Undercharged Battery Check): in Section 1J”)
  - Generator field coil monitor circuit (refer to “Generator Inspection: in Section 1J”)

If electric load current sensor circuit and charging system is in good condition, electric load current sensor is faulty.

### Without Using SUZUKI Scan Tool

1) Measure sensor voltage between “C37-9” terminal of ECM connector and vehicle body ground referring to “Inspection of ECM and Its Circuits: in Section 1A”.
   If check result is satisfactory, electric load current sensor is in good condition.
   If check result is not satisfactory, check the following parts and circuit.
   - Electric load current sensor circuit (power, ground and output)
   - Following charging system components
     - Battery (refer to “Battery Inspection: in Section 1J”)
     - Generator (refer to “Generator Inspection: in Section 1J”)
     - Generator output control circuit (refer to “Generator Test (Undercharged Battery Check): in Section 1J”)
     - Generator field coil monitor circuit (refer to “Generator Inspection: in Section 1J”)

   If electric load current sensor circuit and charging system is in good condition, electric load current sensor is faulty.

## Electric Load Current Sensor Removal and Installation (For J20 Engine)

S5JB0A1306032

### Removal

1) Remove battery from vehicle referring to “Battery Dismounting and Remounting: in Section 1J”.
2) Detach fuse box No.1 (1) from its bracket.

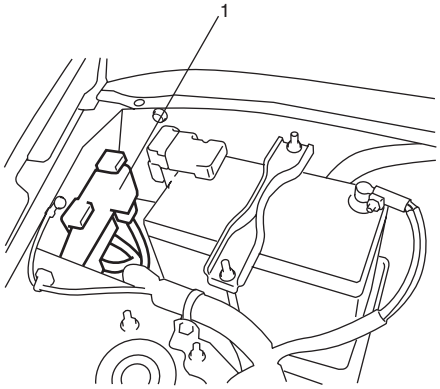


I5JB0A130010-02

3) Remove fuse block cover.
4) Disconnect connector from electric load current sensor.
5) Remove electric load current sensor (1) from fuse box No.1 (2).

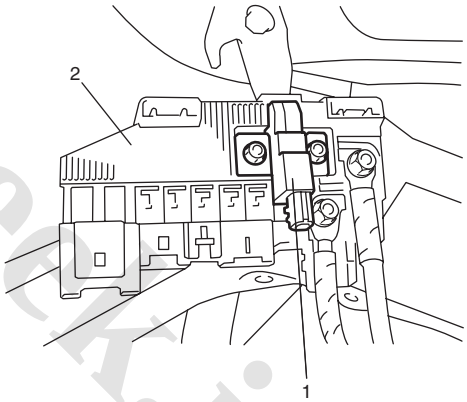


I5JB0A130011-01

### Installation

Reverse removal procedure noting the following.

- Install battery referring to “Battery Dismounting and Remounting: in Section 1J”.

www.cargeek.ir

 www.CarGeek.ir

# Specifications

## Tightening Torque Specifications

S5JB0A1307001

| Fastening part | Tightening torque | | | Note |
|---|---|---|---|---|
| | N·m | kgf-m | lb-ft | |
| Accelerator pedal position (APP) sensor assembly nut | 6.0 | 0.6 | 4.5 | ☞ |
| APP sensor assembly bracket nut | 6.0 | 0.6 | 4.3 | ☞ |
| ECT sensor | 12.5 | 1.25 | 9.0 | ☞ |
| A/F sensor | 45 | 4.5 | 32.5 | ☞ |
| Heated oxygen sensor | 45 | 4.5 | 32.5 | ☞ |
| CMP sensor bolt | 11 | 1.1 | 8.0 | ☞ |
| CKP sensor bolt | 11 | 1.1 | 8.0 | ☞ |
| CKP sensor bolt | 10 | 1.0 | 7.5 | ☞ |
| Knock sensor | 22 | 2.2 | 16.0 | ☞ |
| MAF and IAT sensor screw | 1.5 | 0.15 | 1.1 | ☞ |

**Reference:**
For the tightening torque of fastener not specified in this section, refer to “Fastener Information:  in Section 0A”.

www.cargeek.ir

www.cargeek.ir

www.CarGeek.ir


# Engine Mechanical

## For M16A Engine with VVT

### General Description

#### Engine Construction Description

S5JB0A1411001

The engine is water-cooled, in line 4 cylinders, 4 stroke cycle gasoline unit with its DOHC (Double overhead camshaft) valve mechanism arranged for “V” type valve configuration and 16 valves (4 valves / one cylinder). The double overhead camshaft is mounted over the cylinder head; it is driven from crankshaft through timing chain, and no push rods are provided in the valve train system.

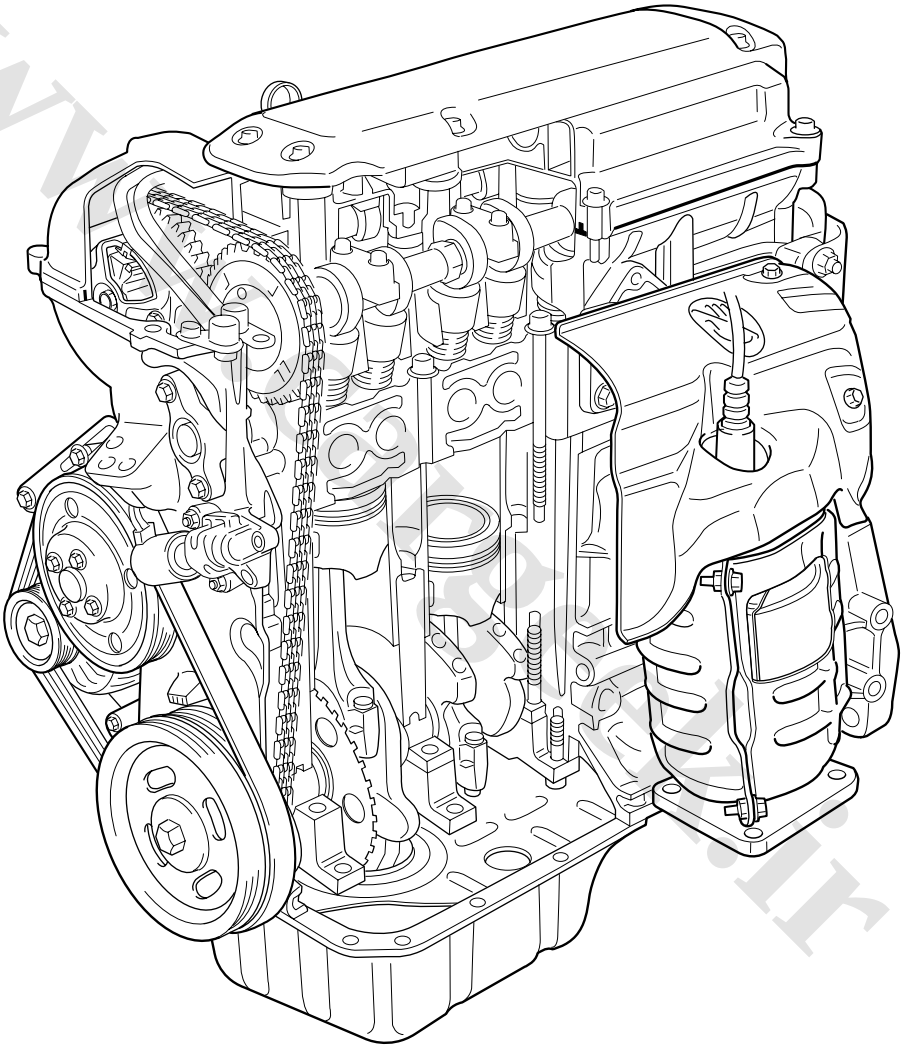

I3RM0A140001-01

www.cargeek.ir

www.CarGeek.ir

## Camshaft Position Control (VVT Variable Valve Timing) System Description

S5JB0A1411002

### System Description

The VVT system is an electronic control system which continuously vary and optimize the intake valve timing in response to the engine operating condition.

The optimized intake valve timing produce such an air intake with high efficiency that both the higher power generation and lower fuel consumption can be attained in the whole engine speed range from low to high. In the area of the average engine load, low emission of nitrogen oxides (NOx) and high fuel efficiency can also be attained by making the valve opening overlap between the intake and exhaust valves longer.

For the brief of the system operation, the intake valve timing is varied by the cam timing sprocket (1) which varies the rotational phase between the intake camshaft (3) and sprocket. The rotor (2) in the cam timing sprocket is actuated by switching or adjusting the hydraulic pressure applied to the chambers for the timing advancing (7) and/or retarding (6). To switch or adjust the hydraulic pressure appropriately, ECM operates the oil control valve (12) with detecting the engine speed, intake air value, throttle opening, engine coolant temperature and camshaft position (angle).

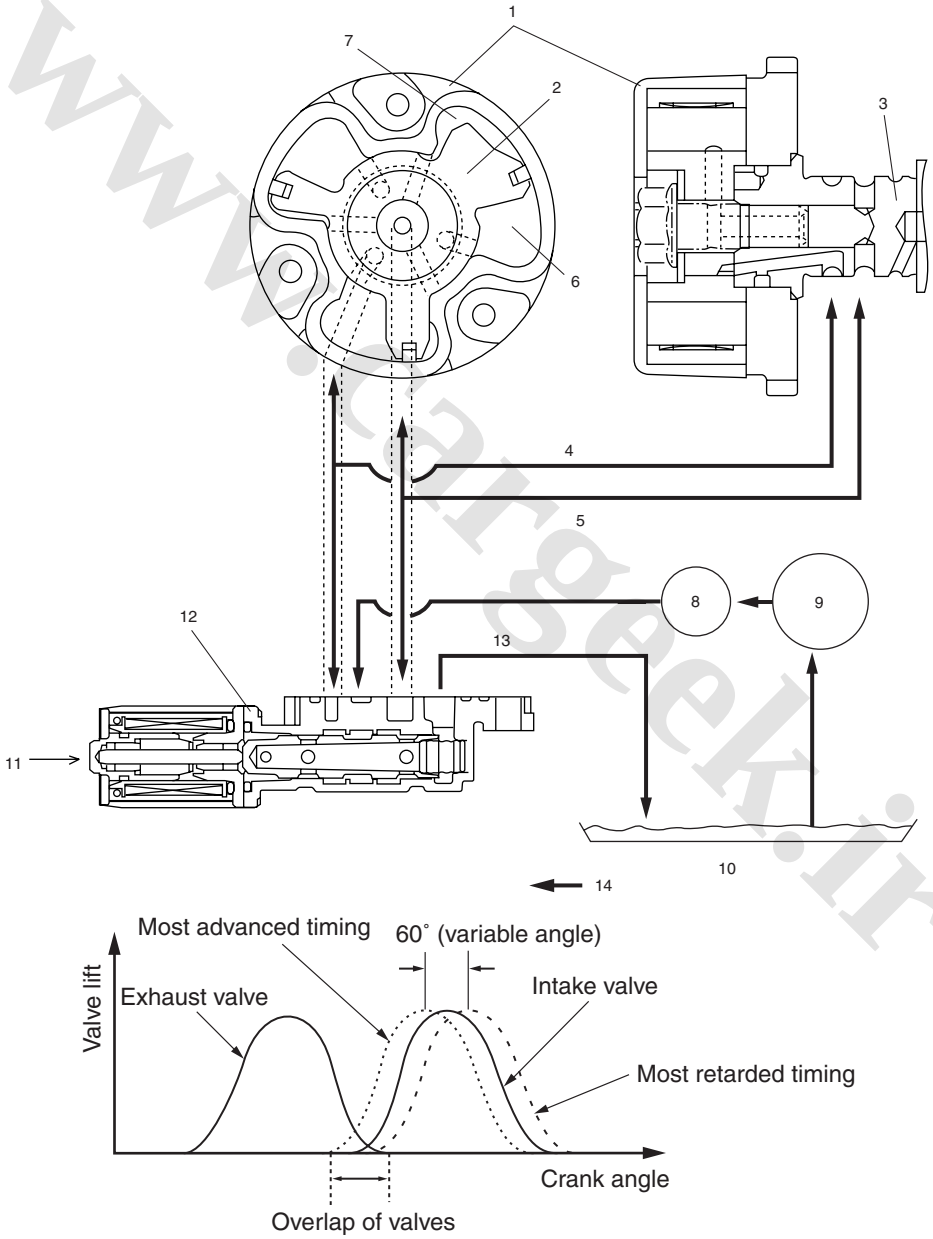


I3RH0B140002-01

| | | | |
|---|---|---|---|
| 4. Oil passage to chamber for timing retarding | 8. Oil filter | 10. Oil pan | 12. Oil flow |
| 5. Oil passage to chamber for timing advancing | 9. Oil pump | 11. Control signal from ECM | |

www.cargeek.ir

www.CarGeek.ir


### Oil Control Valve

The oil control valve switches and adjusts the hydraulic pressure applied to the cam timing sprocket by moving the spool valve (1) according to the duty pulse signals output from the ECM. By this operation, the intake valve timing is varied continuously. Signals output from the ECM are the duty pulse of about 240 Hz.

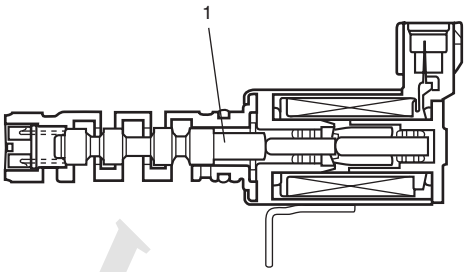


I3RH0B140003-01

### Cam Timing Sprocket

The cam timing sprocket is equipped with the chambers for timing advancing (2) and retarding (3) which are separated by the rotor (5). The rotor rotates receiving the hydraulic pressure applied to both the chambers. The sprocket (1) is installed on the housing (4) and the rotor is secured on the intake camshaft by fastening the bolts. Therefore, the actuation of the rotor makes the phase difference between the sprocket and intake camshaft.

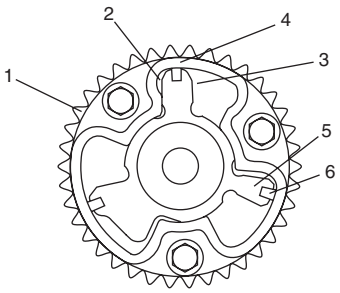


I3RH0B140004-01

6. Seal

### Timing Advancing

When the duty ratio of the signal output from the ECM is heavy, the spool valve (4) of the oil control valve moves to the left (opposite direction against the coil (5)). By this spool valve movement, the pressurized oil (1) is led into the chambers for timing advancing and the oil in the chambers for timing retarding is drained. This operations actuate the rotor (3) and result in the advanced timing of the intake valve.

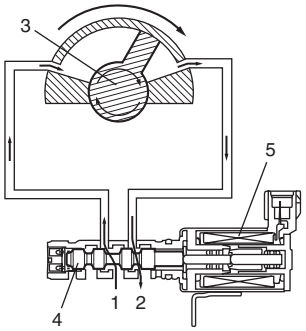


I3RH0B140005-01

2. Drain

### Timing Holding

When the duty ratio of the signal output from the ECM shows that of holding, the spool valve of the oil control valve is located at hold position. Because this condition generates no oil pressure changes in both chambers, the rotor is fixed at a target position.

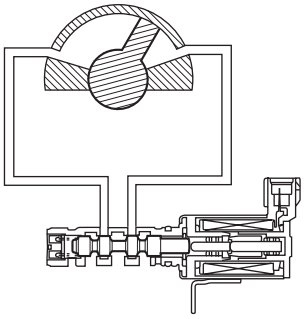

I3RH0B140006-01

### Timing Retarding

When the duty ratio of the signal output from the ECM is light, the spool valve of the oil control valve moves to the right (head for the coil). By this spool valve movement, the pressurized oil is led into the chambers for timing retarding and the oil in the chambers for timing advancing is drained. This operations actuate the rotor and result in the retarded timing of the intake valve.

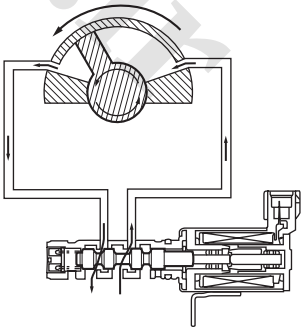

I3RH0B140007-01

www.cargeek.ir

www.CarGeek.ir

**Targeted Timing Varying Operation**

| Driving condition | Valve timing | Target of control | Effect |
|---|---|---|---|
| Engine running at idle speed | Most retarded | To shorten the valve opening overlap in order to prevent the exhaust gas counterflow to intake manifold. | Stabilization of the engine rotation at idle speed. |
| Average engine load range | To the advanced side | To lengthen the valve opening overlap in order to enhance the internal exhaust gas recirculation and reduce the pumping loss. | Improvement of the fuel efficiency.<br>Lowering of the exhaust emission. |
| Light engine load range | To the retarded side | To shorten the valve opening overlap in order to prevent the exhaust gas counterflow to intake manifold. | Keeping of the engine stability. |
| Low or average engine speed range with heavy engine load | To the advanced side | To advance the closing timing of the intake valve in order to improve the volumetric efficiency. | Improvement of generating the engine torque at low and average engine speed. |
| High engine speed range with heavy engine load | To the retarded side | To retard the closing timing of the intake valve in order to improve the volumetric efficiency. | Improvement of generating the engine power. |
| Low engine coolant temperature | Most retarded | To shorten the valve opening overlap in order to prevent the exhaust gas counterflow to intake manifold and reduce the fuel increasing.<br>To slow the fast idle speed of the engine as a result of stabilizing the engine idling. | Stabilization of the fast idling of the engine.<br>Improvement of the fuel efficiency. |
| At engine starting and stopping | Most retarded | To shorten the valve opening overlap in order to prevent the exhaust gas counterflow to intake manifold. | Improvement of start ability. |

# Diagnostic Information and Procedures

## Compression Check

S5JB0A1414001

Check compression pressure on all 4 cylinders as follows:

1) Warm up engine to normal operating temperature.
2) Stop engine after warming up.

**NOTE**

**After warming up engine, place transaxle gear shift lever in “Neutral”, and set parking brake and block drive wheels.**

3) Disconnect ignition coil couplers (1).
4) Remove ignition coil assemblies (2) with high-tension cord (3).
5) Remove all spark plugs.
6) Disconnect fuel injector wires (4) at the coupler.

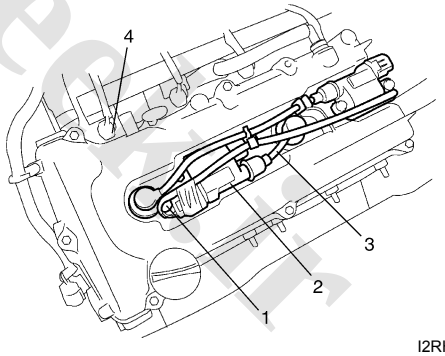


I2RH0B140003-01

7) Install special tools (Compression gauge) into spark plug hole.

**Special tool**
**(A): 09915–64512**
**(B): 09915–64530**
**(C): 09915–67010**

www.cargeek.ir

www.CarGeek.ir


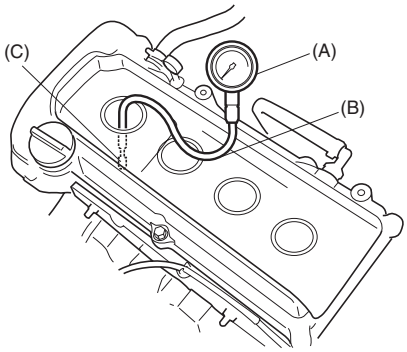

I3RH0B140009-01

8) Disengage clutch (to lighten starting load on engine) for M/T vehicle, and depress accelerator pedal (1) all the way to make throttle fully open.

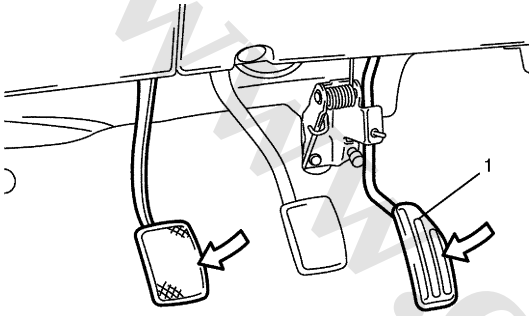

I5JB0A141001-02

9) Crank engine with fully charged battery, and read the highest pressure on compression gauge.

**NOTE**

- **For measuring compression pressure, crank engine at least 250 r/min. by using fully charged battery.**
- **If measured compression pressure is lower than limit value, check installation condition of special tool. If it is properly installed, possibility is compression pressure leakage from where piston ring and valve contact.**

**<u>Compression pressure</u>**
**Standard: 1400 kPa (14.0 kg/cm$^2$, 199.0 psi)**
**Limit: 1100 kPa (11.0 kg/cm$^2$, 156.0 psi)**
**Max. difference between any two cylinders: 100 kPa (1.0 kg/cm$^2$, 14.2 psi)**

10) Carry out Steps 7) through 9) on each cylinder to obtain 4 readings.
11) After checking, install spark plugs and ignition coil assemblies (2) with high-tension cord (3).
12) Connect ignition coil couplers (1).
13) Connect fuel injector wires (4) at the coupler.

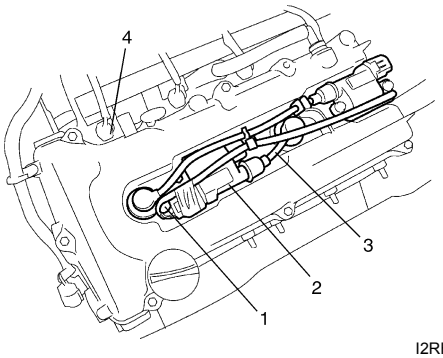

I2RH0B140003-01

## Engine Vacuum Check

S5JB0A1414002

The engine vacuum that develops in the intake line is a good indicator of the condition of the engine. The vacuum checking procedure is as follows:

1) Warm up engine to normal operating temperature.

**NOTE**

**After warming up engine, be sure to place transaxle gear shift lever in “Neutral”, and set parking brake and block drive wheels.**

2) Stop engine and turn off the all electric switches.
3) Remove PCV hose (1) from PCV valve (2).

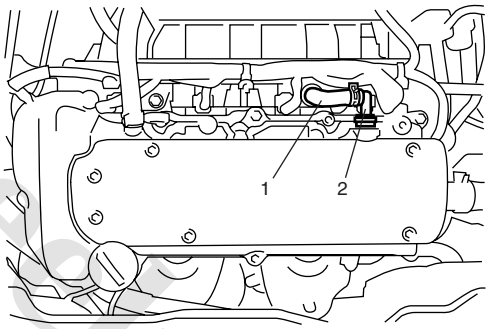

I3RH0B140011-01

4) Connect special tool (Vacuum gauge) to PCV hose (1).

**Special tool**
**(A): 09915–67311**

5) Blind PCV valve (2) using tape or the like.

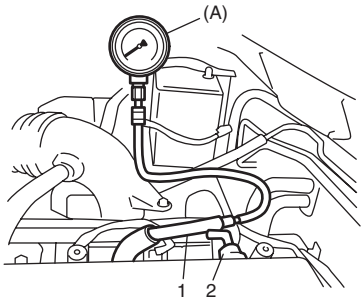

I5JB0A141002-02

www.cargeek.ir

www.CarGeek.ir

6) Run engine at specified idle speed and read vacuum gauge. Vacuum should be within specification.

**Vacuum specification (at sea level)**
**59 – 73 kPa (45 – 55 cmHg, 17.7 – 21.6 in.Hg) at specified idle speed**

7) After checking, disconnect special tool (Vacuum gauge) from PCV hose.
8) Detach blind cap from PCV valve.
9) Connect PCV hose to PCV valve.

## Valve Lash (Clearance) Inspection

S5JB0A1414003

1) Remove negative cable at battery.
2) Remove cylinder head cover referring to “Cylinder Head Cover Removal and Installation: For M16A Engine with VVT”.
3) Using 17 mm wrench, turn crankshaft pulley (1) clockwise until cam lobes (2) become perpendicular to shim faces (3) at valves “1” and “7” as shown in the figure.
4) Check valve lashes with thickness gauge (4) according to the following procedure.
   a) Check valve lashes at valves “1” and “7”.
   b) Turn camshafts by 90° (by turning crankshaft with wrench).
   c) Make sure that cam lobes are perpendicular to shim faces at valves to be checked (in this case, “3” and “8”), if not, adjust it by turning crankshaft. Check valve lashes.
   d) In the same manner as b) – c), check valve lashes at valves “4” and “6”.
   e) In the same manner as b) – c) again, check valve lashes at valves “2” and “5”.

If valve lash is out of specification, record valve lash and adjust it to specification by replacing shim.

**Valve clearance specification**

| | When cold (Coolant temperature is 15 – 25 °C (59 – 77 °F)) | When hot (Coolant temperature is 60 – 68 °C (140 – 154 °F)) |
|---|---|---|
| **Intake** | **0.18 – 0.22 mm (0.007 – 0.009 in.)** | **0.21 – 0.27 mm (0.008 – 0.011 in.)** |
| **Exhaust** | **0.28 – 0.32 mm (0.011 – 0.013 in.)** | **0.30 – 0.36 mm (0.012 – 0.014 in.)** |

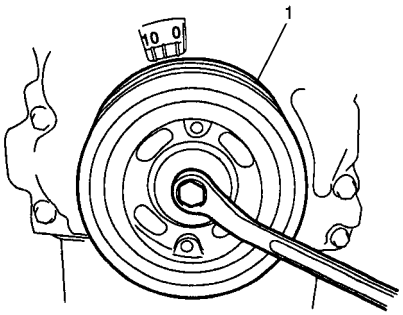


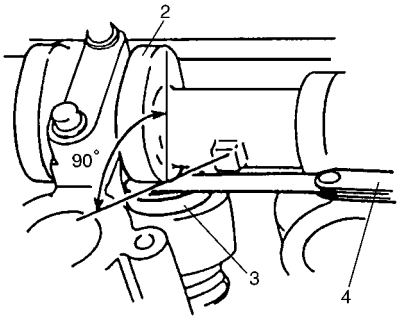


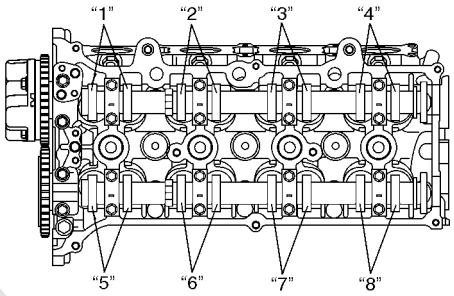


I3RM0A140004-01

**Replacement of Shim**

1) Close the valve whose shim (2) is to be replaced by turning crankshaft, then turn tappet (3) till its cut section (1) faces inside as shown in the figure.

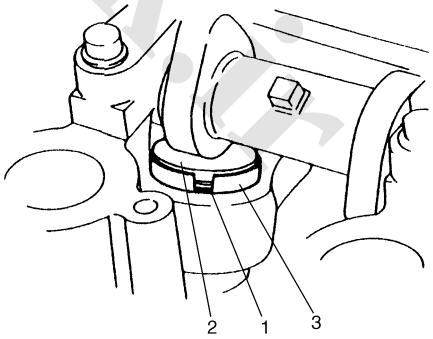


I2RH0B140006-01

2) Lift down the valve by turning crankshaft to 360°.
3) Hold tappet at that position using special tool as follows.
   a) Remove its housing bolts.
   b) Check housing No. and select special tool corresponding to housing No., referring to “Special tool selection table”.

www.cargeek.ir

www.CarGeek.ir


**Special tool selection table**

| No. on camshaft housing | Embossed mark on special tool |
|---|---|
| I2 | IN2 |
| I3, I4, I5 | IN345 |
| E2 | EX2 |
| E3, E4, E5 | EX345 |

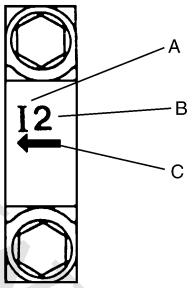


I2RH0B140011-01

| | |
|---|---|
| A: | I: Intake side or E: Exhaust side |
| B: | Position from timing chain side |
| C: | Pointing to timing chain side |

c) Hold down the tappet so as not to contact the shim by installing special tool on camshaft housing with housing bolt (1) tighten housing bolts to specified torque.

**Special tool**
**(A): 09916–67020**
**(A): 09916–67021**

**Tightening torque**
**Camshaft housing bolts (a): 8 N·m (0.8 kgf-m, 6.0 lb-ft) for tightening of special tool**

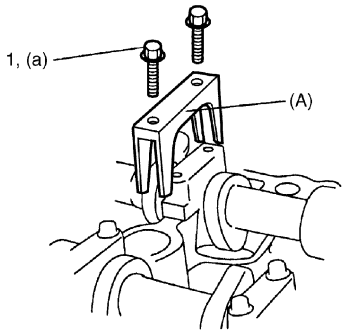


I3RM0A140005-01

4) Turn camshaft by approximately 90° clockwise and remove shim (3).

**⚠ WARNING**

**Never put in the hand between camshaft and tappet.**

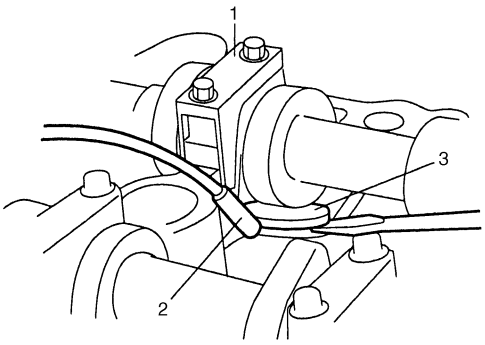


I2RH0B140013-01

| | |
|---|---|
| 1. Special tool | 2. Magnet |

5) Using a micrometer (2), measure the thickness of the removed shim (1), and determine replacement shim by calculating the thickness of new shim with the following formula and table.

**<u>Shim thickness specification</u>**
**Intake side:**
**A = B + C – 0.20 mm (0.008 in.)**
**Exhaust side:**
**A = B + C – 0.30 mm (0.012 in.)**
**A: Thickness of new shim**
**B: Thickness of removed shim**
**C: Measured valve clearance**

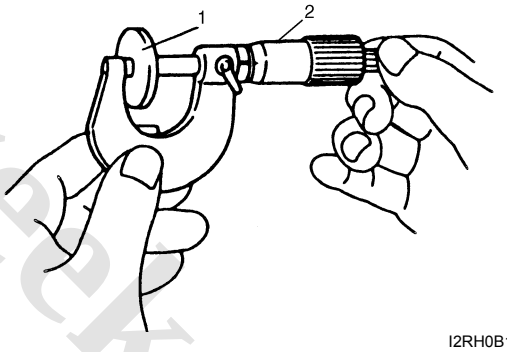


I2RH0B140014-01

**For example of intake side:**
When thickness of removed shim is 2.40 mm (0.094 in.), and measured valve clearance is 0.45 mm (0.018 in.).
A = 2.40 mm (0.094 in.) + 0.45 mm (0.018 in.) – 0.20 mm (0.008 in.) = 2.65 mm (0.104 in.)
Calculated thickness of new shim = 2.65 mm (0.104 in.)

www.cargeek.ir

www.CarGeek.ir

6) Select new shim No. (1) with a thickness as close as possible to calculated value.

**Available new shims No.**

| Thickness mm (in.) | Shim No. | Thickness mm (in.) | Shim No. |
|---|---|---|---|
| 2.175 (0.0856) | 218 | 2.600 (0.1024) | 260 |
| 2.200 (0.0866) | 220 | 2.625 (0.1033) | 263 |
| 2.225 (0.0876) | 223 | 2.650 (0.1043) | 265 |
| 2.250 (0.0886) | 225 | 2.675 (0.1053) | 268 |
| 2.275 (0.0896) | 228 | 2.700 (0.1063) | 270 |
| 2.300 (0.0906) | 230 | 2.725 (0.1073) | 273 |
| 2.325 (0.0915) | 233 | 2.750 (0.1083) | 275 |
| 2.350 (0.0925) | 235 | 2.775 (0.1093) | 278 |
| 2.375 (0.0935) | 238 | 2.800 (0.1102) | 280 |
| 2.400 (0.0945) | 240 | 2.825 (0.1112) | 283 |
| 2.425 (0.0955) | 243 | 2.850 (0.1122) | 285 |
| 2.450 (0.0965) | 245 | 2.875 (0.1132) | 288 |
| 2.475 (0.0974) | 248 | 2.900 (0.1142) | 290 |
| 2.500 (0.0984) | 250 | 2.925 (0.1152) | 293 |
| 2.525 (0.0994) | 253 | 2.950 (0.1161) | 295 |
| 2.550 (0.1004) | 255 | 2.975 (0.1171) | 298 |
| 2.575 (0.1014) | 258 | 3.000 (0.1181) | 300 |

7) Install new shim facing shim No. side with tappet.

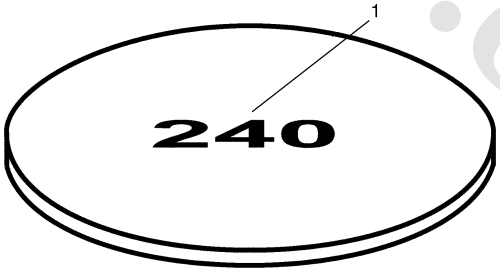


I2RH0B140015-01

8) Lift valve by turning crankshaft counterclockwise (in opposite direction against above Step 4)) and remove special tool.

**Special tool**
**(A): 09916–67020**
**(A): 09916–67021**

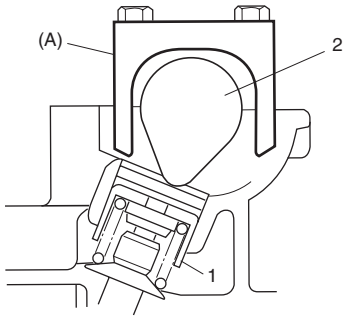


I3RM0A140006-01

| | |
|---|---|
| 1. Tappet | 2. Camshaft |

9) Install camshaft housing (1) and tighten bolts to specified torque.

**Tightening torque**
**Camshaft housing bolt (a): 11 N·m (1.1 kgf-m, 8.0 lb-ft)**

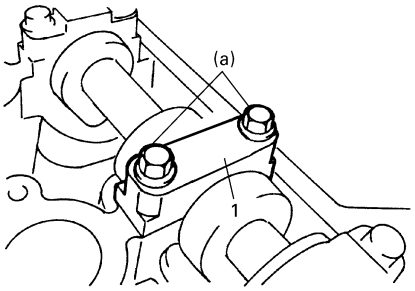


I2RH0B140149-01

10) Check valve clearance again after adjusting it.
11) After checking and adjusting all valves.
12) Install cylinder head cover referring to “Cylinder Head Cover Removal and Installation: For M16A Engine with VVT”.

# Repair Instructions

## Air Cleaner Filter Removal and Installation

S5JB0A1416001

### Removal

1) Open air cleaner case (1) by unhooking its clamps (2).
2) Remove air cleaner filter from case.

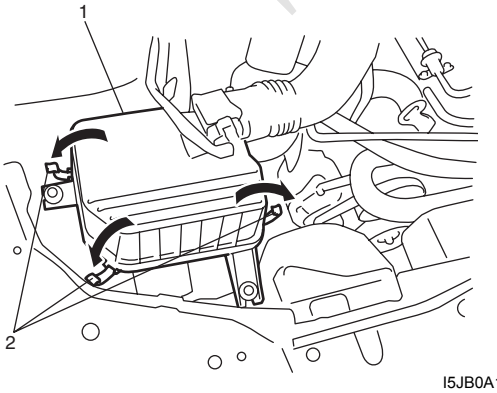


I5JB0A141003-02

### Installation

Reverse removal procedure for installation.

www.cargeek.ir

www.CarGeek.ir


## Air Cleaner Filter Inspection and Cleaning

S5JB0A1416002

### Inspection

Check air cleaner filter for dirt. Replace excessive dirty filter.

### Cleaning

Blow off dust by compressed air from air outlet side of element.

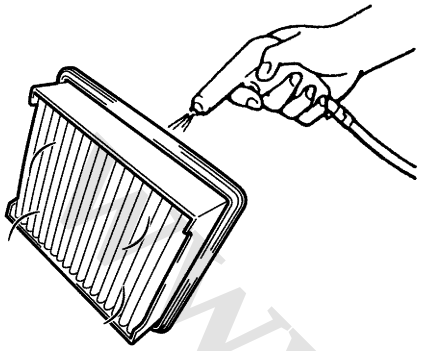

I2RH0B140150-01

## Cylinder Head Cover Removal and Installation

S5JB0A1416011

### Removal

1) Disconnect negative cable at battery.
2) Disconnect MAF sensor coupler (1).
3) Remove air cleaner case (2).

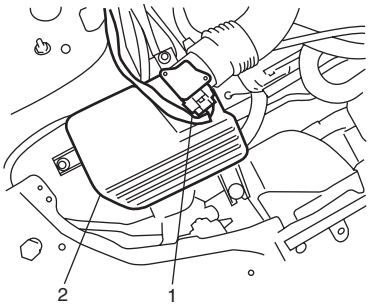


I5JB0A141004-02

4) Remove cylinder head upper cover.
5) Disconnect ignition coil couplers (1).
6) Remove ignition coil assemblies (2) with high-tension cord (3).
7) Remove wire harness clamp from cylinder head cover.

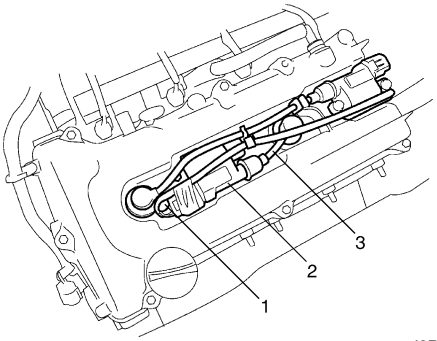


I2RH0B140032-01

8) Remove oil level gauge (1).
9) Disconnect PCV hose (2) from PCV valve (3) and disconnect breather hose (4) from cylinder head cover.
10) Remove cylinder head cover mounting bolts in such order as indicated in the figure.

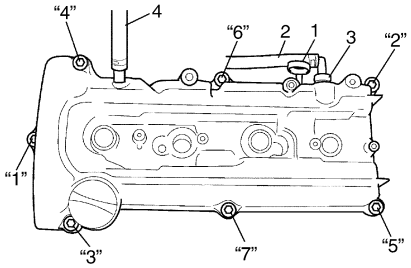


I5JB0A141006-01

11) Remove cylinder head cover (1) with cylinder head cover gasket (2) and spark plug hole gasket (3).

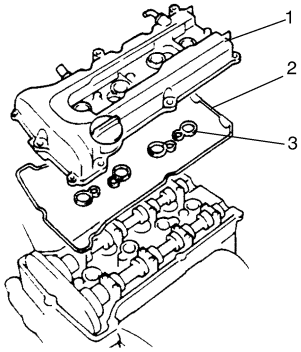


I2RH0B140034-01

### Installation

1) Install new spark plug hole gaskets (1) and new cylinder head cover gasket (2) to cylinder head cover (3) as shown in the figure.

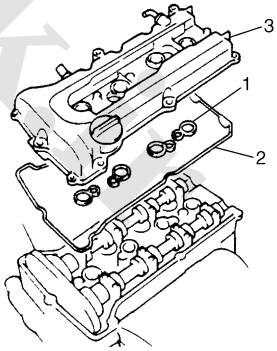


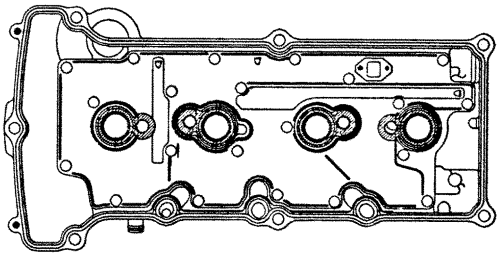

I2RH0B140035-01

www.cargeek.ir

www.CarGeek.ir

2) Remove oil, old sealant, and dust from sealing surfaces on cylinder head and cover. After cleaning, apply sealant “A” to the following point.
   - Cylinder head cover gasket (1) sealing surface area (2) as shown.

     **“A”: Water tight sealant 99000–31250 (SUZUKI Bond No.1207F)**

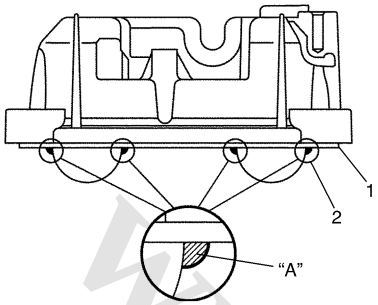


I2RH0B140036-01

   - Timing chain cover (1) and cylinder head (2) mating surface as shown.

     **“A”: Water tight sealant 99000–31250 (SUZUKI Bond No.1207F)**

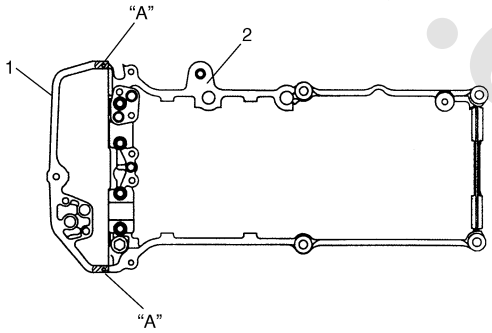


I2RH0B140037-01

3) Install cylinder head cover to cylinder head.

**NOTE**

**When installing cylinder head cover, use care so that cylinder head cover gasket or spark plug hole gaskets will not get out of place or fall off.**

4) Tightening bolts in such order as indicated in the figure a little at a time till they are tightened to specified torque.

   **Tightening torque**
   **Cylinder head cover bolt (a): 8 N·m (0.8 kgf-m, 6.0 lb-ft)**

5) Connect PCV hose (2) to PCV valve (3).
6) Connect breather hose (4).
7) Install oil level gauge (1).

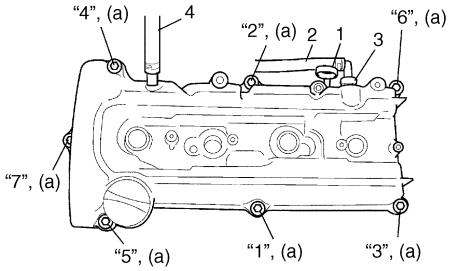


I5JB0A141007-01

8) Install wire harness clamp to cylinder head cover.
9) Install ignition coil assemblies with high-tension cord.
10) Connect ignition coil couplers and clamp harness securely.
11) Install cylinder head upper cover.
12) Connect negative cable at battery.

www.cargeek.ir

www.CarGeek.ir


## Throttle Body and Intake Manifold Components

S5JB0A1416009

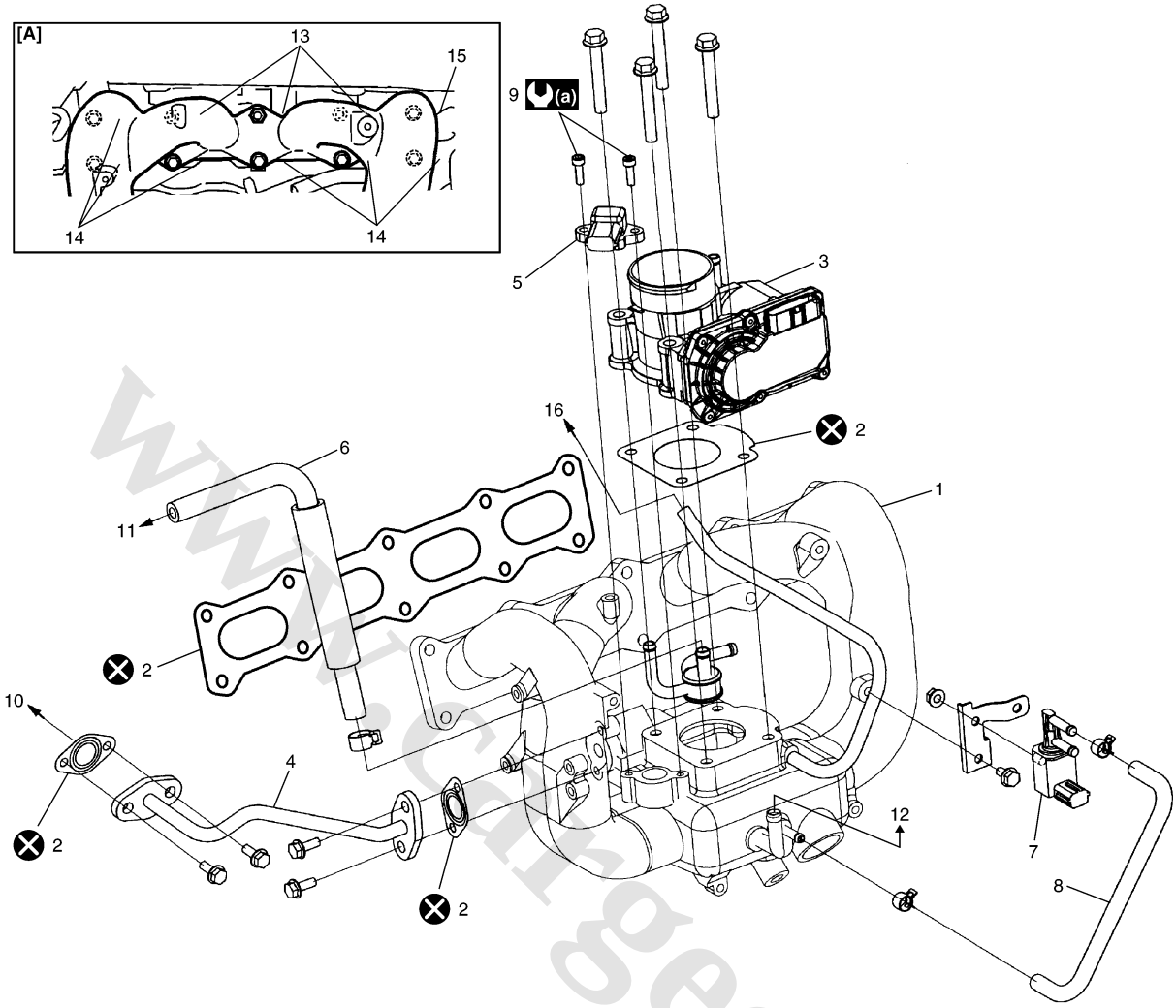


I5JB0A141005-05

| | | |
|---|---|---|
| [A]: Installing location of intake manifold bolt and nut | 7. EVAP canister purge valve | 14. Intake manifold bolt (short) |
| 1. Intake manifold | 8. EVAP canister purge valve hose | 15. Intake manifold bolt (long) |
| 2. Gasket | 9. MAP sensor bolt | 16. To delivery pipe |
| 3. Electrical throttle body | 10. To EGR valve | (a) : 5 N·m (0.5 kgf-m, 4.0 lb-ft) |
| 4. EGR pipe | 11. To PCV valve | ⊗ : Do not reuse. |
| 5. MAP sensor | 12. To brake booster | |
| 6. PCV hose | 13. Intake manifold nut | |

## Throttle Body On-Vehicle Inspection

S5JB0A1416005

Check electric throttle body assembly referring to “Throttle Valve Operation Check” and “Electric Throttle Body Assembly Operation Check” under “Electric Throttle Body Assembly On-Vehicle Inspection: in Section 1C”.

www.cargeek.ir

www.CarGeek.ir

## Electric Throttle Body Assembly Removal and Installation

S5JB0A1416045

### Removal

1) Disconnect negative cable at battery.
2) Drain coolant referring to “Cooling System Draining: in Section 1F”.
3) Detach breather union (1) from air intake pipe (2).
4) Disconnect air intake pipe (2).

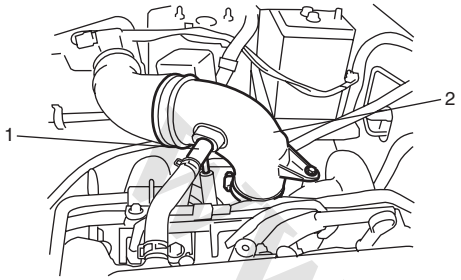


I5JB0A141008-03

5) Disconnect engine coolant hoses (1) from electric throttle body assembly (3).
6) Disconnect connector (2) from electric throttle body assembly.

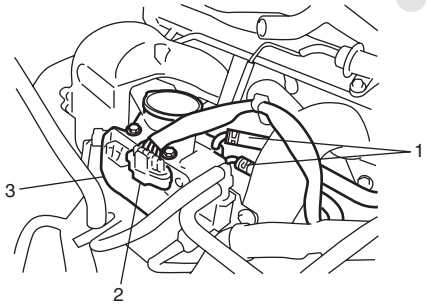


I5JB0A141009-02

7) Remove electric throttle body assembly from intake manifold.

### Installation

1) Clean mating surfaces and install new throttle body gasket to intake manifold.
2) Install electric throttle body assembly (1) to intake manifold.
3) Connect connector (2) to electric throttle body assembly securely.
4) Connect engine coolant hoses (3) to electric throttle body assembly (1).

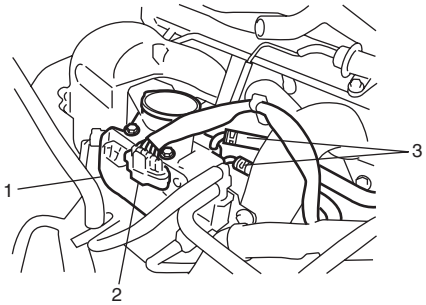


I5JB0A141010-02

5) Connect air intake pipe (1) and breather union (2).
6) Tighten air intake pipe bolt (3) to specified torque.

**Tightening torque**
**Air intake pipe bolt (a): 3 N·m (0.3 kgf-m, 2.5 lb-ft)**

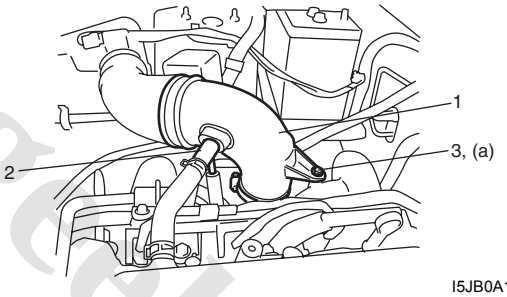


I5JB0A141011-03

7) Refill coolant referring to “Cooling System Flush and Refill: in Section 1F”.
8) Connect negative cable at battery.
9) Perform calibration of electric throttle body assembly referring to “Electric Throttle Body System Calibration: in Section 1C” if replaced.

## Throttle Body Cleaning

S5JB0A1416046

Clean electric throttle body assembly referring to “Throttle Valve Visual Check” under “Electric Throttle Body Assembly On-Vehicle Inspection: in Section 1C”.

www.cargeek.ir

www.CarGeek.ir


## Intake Manifold Removal and Installation

S5JB0A1416010

### Removal

1) Relieve fuel pressure in fuel feed line referring to “Fuel Pressure Relief Procedure: in Section 1G”.
2) Remove throttle body referring to “Electric Throttle Body Assembly Removal and Installation: For M16A Engine with VVT”.
3) Disconnect the following hoses:
   - Brake booster hose (2) from intake manifold
   - PCV hose (3) from intake manifold
   - EVAP canister purge hose (4) from intake manifold
   - Vacuum hose (5) from intake manifold
   - Water No.1 hose (9) from intake manifold
   - Water No.2 hose (10) from intake manifold
4) Disconnect the following electric wires:
   - Injectors
   - Ground terminal (6) from intake manifold
   - MAP sensor (1)
5) Remove EVAP canister purge valve (7).
6) Remove intake manifold bracket (8).
7) Remove delivery pipe referring to “Fuel Injector Removal and Installation: in Section 1G”.

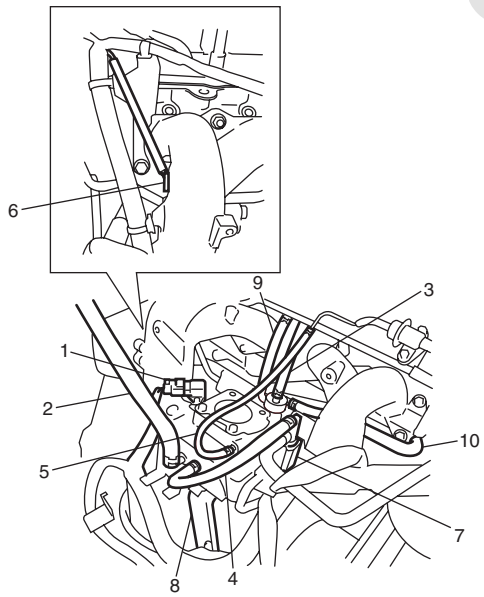


I5JB0A141012-03

8) Remove intake manifold (1) and EGR pipe bolt (2) from cylinder head, and then remove its gaskets.

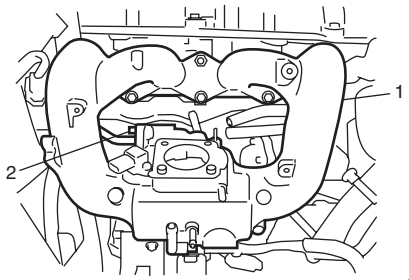


I5JB0A141013-02

### Installation

Reverse removal procedure for installation noting the followings.

- Use new intake manifold gasket.
- Use new EGR pipe gasket.
- Install intake manifold bolt and nut (1) as shown in figure.

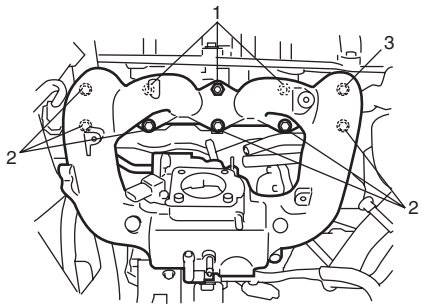


I5JB0A141014-02

| | |
|---|---|
| 2. Short bolt | 3. Long bolt |

- Check to ensure that all removed parts are back in place.
- Refill cooling system referring to “Cooling System Flush and Refill: in Section 1F”.
- Upon completion of installation, turn ignition switch ON but engine OFF and check for fuel leaks.
- Finally, start engine and check for engine coolant leaks.

www.cargeek.ir

www.CarGeek.ir

## Engine Mountings Components

S5JB0A1416012

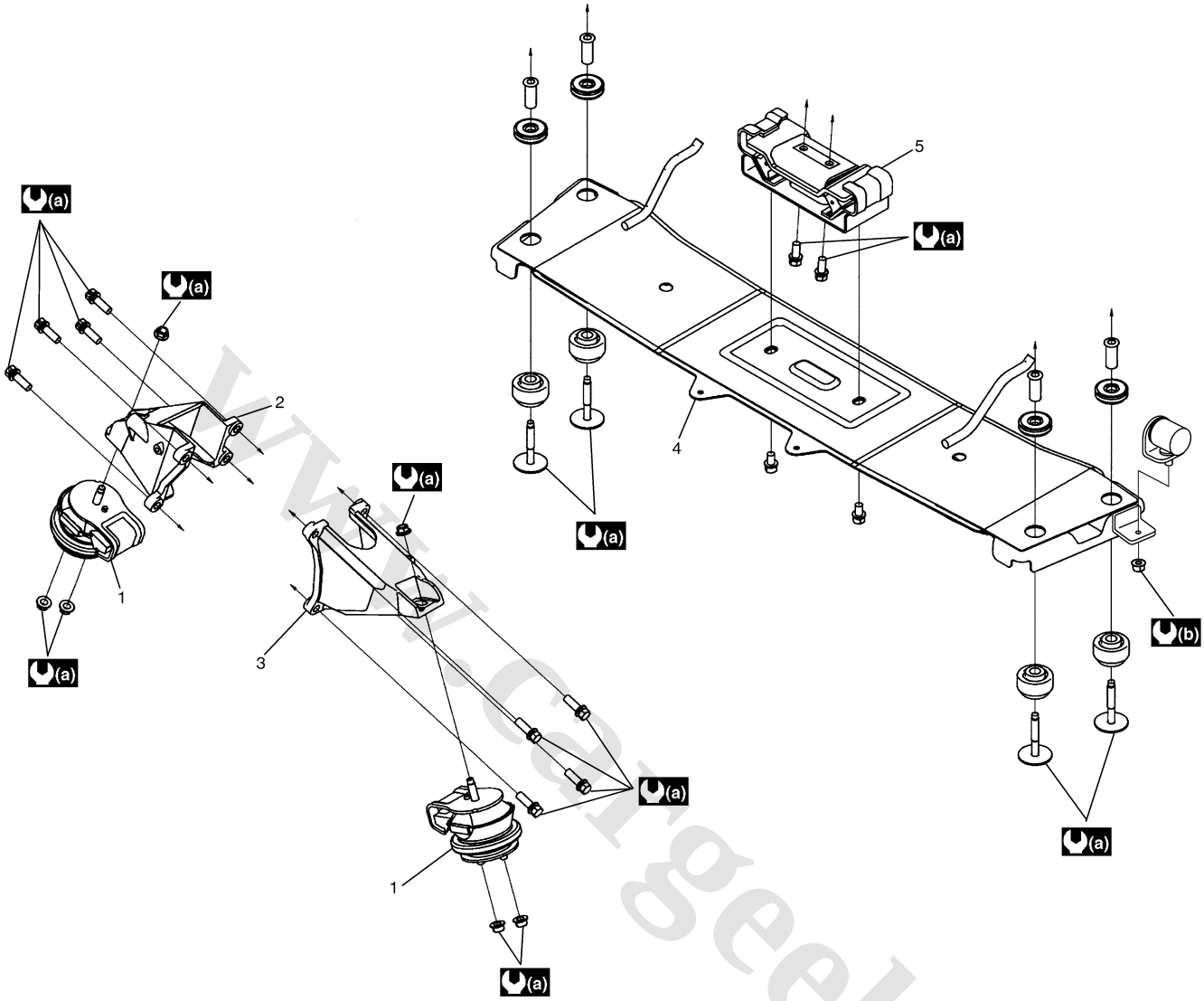


I5JB0A141015-02

| | | |
|---|---|---|
| 1. Engine front mounting | 4. Engine rear mounting member | (a) : 55 N·m (5.5 kgf-m, 40.0 lb-ft) |
| 2. Engine front mounting right bracket | 5. Engine rear mounting | (b) : 17 N·m (1.7 kgf-m, 12.5 lb-ft) |
| 3. Engine front mounting left bracket | 6. Engine mounting nut | |

## Engine Assembly Removal and Installation

S5JB0A1416013

### Removal

1) Relieve fuel pressure according to “Fuel Pressure Relief Procedure: in Section 1G”.
2) Disconnect negative cable at battery.
3) Drain engine oil referring to “Engine Oil and Filter Change: in Section 0B”.
4) Drain coolant referring to “Cooling System Draining: in Section 1F”.
5) Disconnect breather hose (1) from air intake pipe (2).
6) Remove air intake pipe (2).

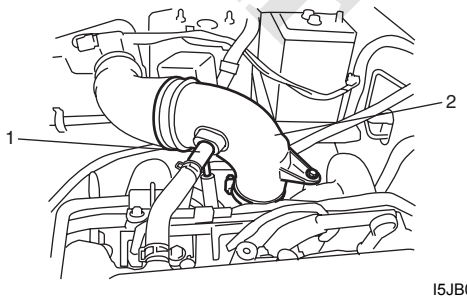


I5JB0A141008-03

www.cargeek.ir

www.CarGeek.ir


7) Disconnect MAF sensor connector (1).
8) Remove air cleaner case (2).

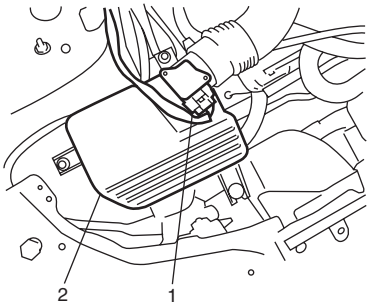

I5JB0A141004-02

9) Disconnect radiator inlet hose (1).

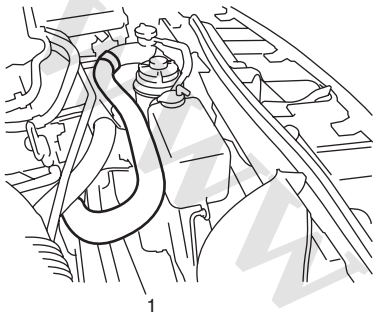

I5JB0A141016-02

10) Remove P/S pump belt referring to “P/S Pump and A/C Compressor (If Equipped) Drive Belt Removal and Installation for M16 Engine Model: in Section 6C”.
11) Disconnect the following electric wires:
    - MAP sensor (1)
    - ECT sensor (2)
    - EGR valve (3)
    - CMP sensor (4)
    - EVAP canister purge valve (5)
    - Ignition coil assembly (6)
    - Injectors (7)
    - A/F sensor (8)
    - HO2S (9)
    - Engine oil pressure switch (10)
    - CKP sensor (11)
    - Back-up light switch (12)
    - Generator (13)
    - Starting motor
    - Ground terminal from intake manifold (14)
    - Magnet clutch switch of A/C compressor (15) (if equipped)
    - P/S pump (16) (if equipped)
    - Electric throttle body (17)
    - Oil control valve (18)
    - Transfer actuator (19)
    - Differential lock switch (20)
    - 4H switch (21)
    - Each wire harness clamps
12) Disconnect the following hoses:
    - Brake booster hose (22) from intake manifold
    - Radiator inlet and outlet hoses (26) from each pipe
    - Heater inlet and outlet hoses (23) from each pipe
    - Fuel hoses (24) from fuel pipes
    - EVAP canister purge (25) hose from purge valve
    - Clutch oil pipe from transmission housing

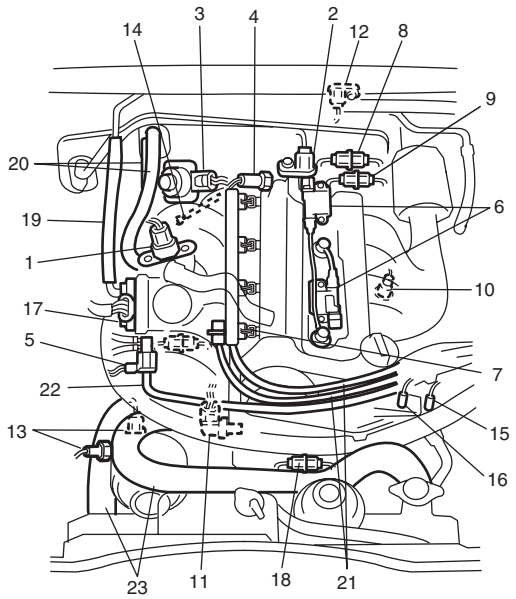

I5JB0A141027-01

13) Remove shift control lever referring to “Transmission Shift Control Lever Removal and Installation: in Section 5B”.
14) Remove exhaust No.1, No.2 and center pipes referring to “Exhaust System Components: in Section 1K”.
15) Remove front and rear propeller shafts referring to “Propeller Shaft Removal and Installation: in Section 3D”.
16) With hose connected, detach P/S pump from its bracket (if equipped) referring to “P/S Pump Removal and Installation for M16 Engine Model: in Section 6C”.

**⚠ CAUTION**

**Suspend removed P/S pump at a place where no damage will be caused during removal and installation of engine assembly.**

www.cargeek.ir

www.CarGeek.ir

17) With hose connected, detach A/C compressor from its bracket (if equipped) referring to “Compressor Assembly Removal and Installation for M16 Engine Model: in Section 7B”.

**⚠ CAUTION**

**Suspend removed A/C compressor at a place where no damage will be caused during removal and installation of engine assembly.**

18) Support front suspension frame and engine rear mounting member using jack (2).
19) Carry out Step 1) to 12) of “Removal” under “Front Suspension Frame, Stabilizer Bar and/or Bushings Removal and Installation: in Section 2B” in order to lower engine with front suspension frame.
20) Remove front suspension frame mounting bolt (1).

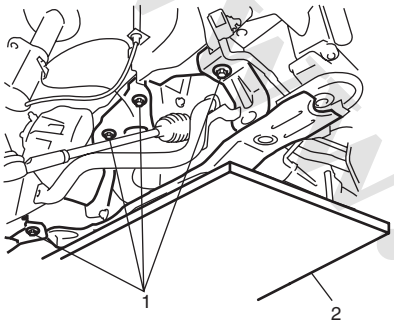

I5JB0A141017-02

21) Remove engine rear mounting member bolt (1).

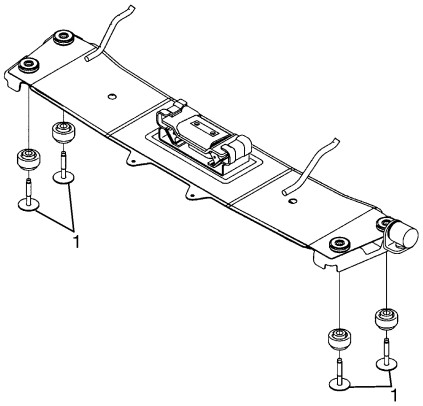

I5JB0A141018-02

22) Before lowering engine with transmission and front suspension frame from engine compartment, recheck to make sure all hoses, electric wires and cables are disconnected from engine.
23) Lower engine with transmission and front suspension frame from engine compartment.

**⚠ CAUTION**

**Before lowering engine, in order to avoid damage to A/C compressor and P/S pump, make clearance by rising them.**

24) Disconnect transmission from engine referring to “Manual Transmission Assembly Dismounting and Remounting: in Section 5B”, if necessary.
25) Remove engine with engine front mounting bracket (1) from engine front mounting (2), if necessary.

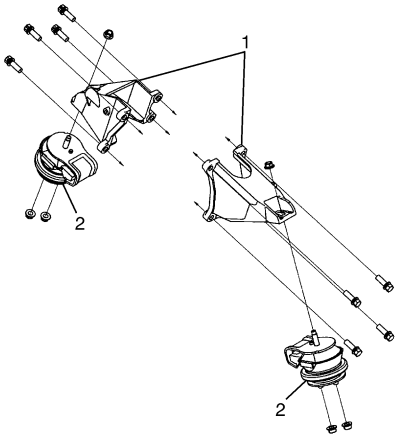

I5JB0A141019-01

26) Remove clutch cover and clutch disc referring to “Clutch Cover, Clutch Disc and Flywheel Removal and Installation: in Section 5C”, if necessary.

**Installation**

1) Install clutch cover and clutch disc referring to “Clutch Cover, Clutch Disc and Flywheel Removal and Installation: in Section 5C”, if necessary.
2) Install engine with engine front mounting bracket to engine front mounting.
   For tightening torque, refer to “Engine Mountings Components: For M16A Engine with VVT”, if necessary.
3) Connect transmission to engine referring to “Manual Transmission Assembly Dismounting and Remounting: in Section 5B”, if necessary.
4) Lift engine with transmission and front suspension frame into engine compartment with jack.

**⚠ CAUTION**

**Before lifting engine, in order to avoid damage to A/C compressor and P/S pump, make clearance by rising them.**

5) Tighten engine rear mounting member bolt referring to “Engine Mountings Components: For M16A Engine with VVT”.
6) Carry out Step 5) to 19) of “Installation” under “Front Suspension Frame, Stabilizer Bar and/or Bushings Removal and Installation: in Section 2B” in order to lift engine with front suspension frame.

www.cargeek.ir

www.CarGeek.ir


7) Remove engine jack.
8) Install front and rear propeller shafts referring to “Propeller Shaft Removal and Installation: in Section 3D”.
9) Install exhaust No.1, No.2 and center pipes referring to “Exhaust System Components: in Section 1K”.
10) Install A/C compressor to its bracket (if equipped) referring to “Compressor Assembly Removal and Installation for M16 Engine Model: in Section 7B”.
11) Install P/S pump to its bracket (if equipped) referring to “P/S Pump Removal and Installation for M16 Engine Model: in Section 6C”.
12) Return disconnected hoses, cables and electric wires noting the followings.
    - Tighten nuts to specified torque.

    **Tightening torque**
    **Starting motor terminal nut: 11 N·m (1.1 kgf-m, 8.0 lb-ft)**
    **Generator terminal nut: 7 N·m (0.7 kgf-m, 5.0 lb-ft)**

13) Install P/S pump and A/C compressor (if equipped) drive belt referring to “P/S Pump and A/C Compressor (If Equipped) Drive Belt Removal and Installation for M16 Engine Model: in Section 6C”.
14) Adjust P/S pump and A/C compressor (if equipped) drive belt tension referring to “P/S Pump and A/C Compressor (If Equipped) Drive Belt Inspection and Adjustment for M16 Engine Model: in Section 6C”.
15) Install air cleaner case (2).
16) Connect MAF sensor connector (1).

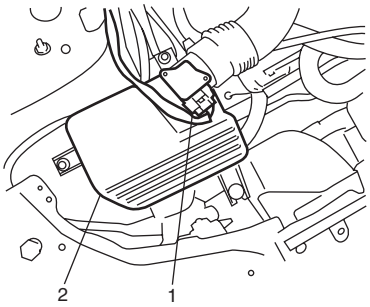

I5JB0A141004-02

17) Install air intake pipe (2).
18) Connect breather union (1) to air intake pipe (2).

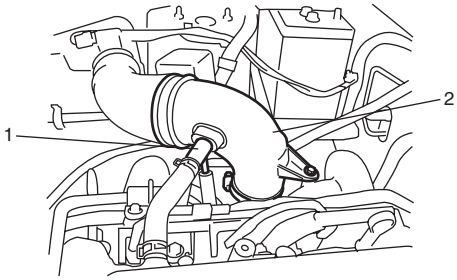

I5JB0A141008-03

19) Check all removed parts are back in place.
20) Refill cooling system with coolant referring to “Cooling System Flush and Refill: in Section 1F”.
21) Refill engine with engine oil referring to “Engine Oil and Filter Change: in Section 0B”.
22) Install engine hood after disconnecting windshield washer hose.
23) After installation, bleed air from clutch system. Refer to “Air Bleeding of Brake System: in Section 4A” for air bleeding procedure.
24) Connect negative cable at battery.
25) With engine OFF, turn ignition switch to ON position and check for fuel leakage.
26) Start engine and check coolant oil and exhaust gas leakage at each connection.

www.cargeek.ir

www.CarGeek.ir

## Timing Chain Cover Components

S5JB0A1416014

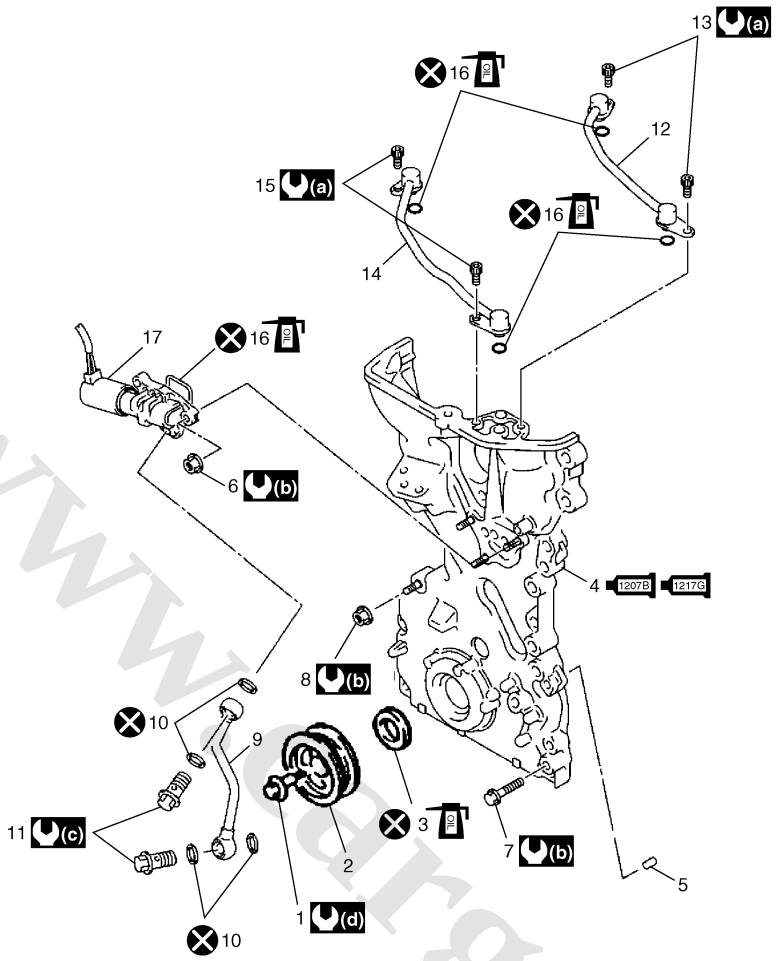


I5JB0A141020-01

| | | |
|---|---|---|
| 1. Crankshaft pulley bolt | 9. Oil gallery pipe No.1 | 17. Oil control valve |
| 2. Crankshaft pulley | 10. Copper washer | (a) : 11 N·m (1.1 kgf-m, 8.0 lb-ft) |
| Oil 3. Oil seal<br>: Apply engine oil to oil seal lip. | 11. Oil gallery pipe No.1 bolt | (b) : 25 N·m (2.5 kgf-m, 18.0 lb-ft) |
| 1207B 1217G 4. Timing chain cover<br>: Apply sealant 99000-31140 to the mating surface of cylinder and cylinder head.<br>: Apply sealant 99000-31260 to the mating surface of timing chain cover referring to the figure of Step 5) of “Installation” under “Timing Chain Cover Removal and Installation: For M16A Engine with VVT”. | 12. Oil gallery pipe No.2 | (c) : 30 N·m (3.0 kgf-m, 22.0 lb-ft) |
| 5. Pin | 13. Oil gallery pipe No.2 bolt | (d) : 150 N·m (15.0 kgf-m, 108.5 lb-ft) |
| 6. Oil control valve mounting nut | 14. Oil gallery pipe No.3 | : Do not reuse. |
| 7. Timing chain cover mounting bolts | 15. Oil gallery pipe No.3 bolt | |
| 8. Timing chain cover mounting nut | Oil 16. O-ring<br>: Apply engine oil. | |

www.cargeek.ir

www.CarGeek.ir


## Timing Chain Cover Removal and Installation

S5JB0A1416015

**⚠ CAUTION**

- **Keep working table, tools and hands clean while overhauling.**
- **Use special care to handle aluminum parts so as not to damage them.**
- **Do not expose removed parts to dust. Keep them always clean.**

### Removal

1) Remove engine assembly from vehicle referring to “Engine Assembly Removal and Installation: For M16A Engine with VVT”.
2) Remove P/S pump and A/C compressor (if equipped) drive belt referring to “P/S Pump and A/C Compressor (If Equipped) Drive Belt Removal and Installation for M16 Engine Model: in Section 6C”.
3) Remove water pump and generator drive belt referring to “Water Pump and Generator Drive Belt Removal and Installation (For M16 Engine): in Section 1J”.
4) Remove crankshaft pulley bolt.
   To lock crankshaft pulley (1), use special tool with it as shown in the figure.

   **Special tool**
   **(A): 09917–68221**

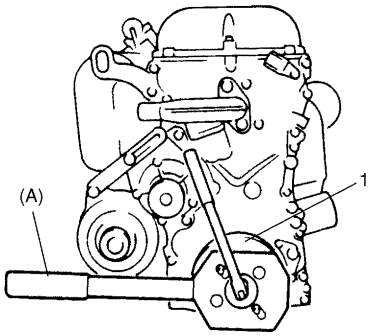


I5JB0A141021-01

5) Remove crankshaft pulley (1).
   If it is hard to remove, use special tools as shown in the figure.

   **Special tool**
   **(A): 09944–36011**
   **(B): 09926–58010**

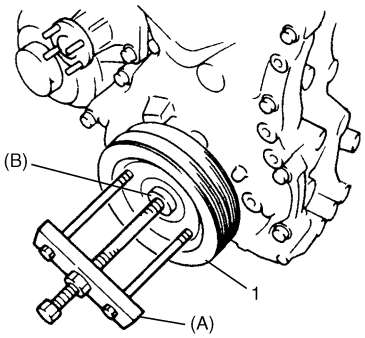


I2RH0B140052-01

6) Remove cylinder head cover referring to “Cylinder Head Cover Removal and Installation: For M16A Engine with VVT”.
7) Remove oil pan referring to “Oil Pan and Oil Pump Strainer Removal and Installation: For M16A Engine with VVT in Section 1E”.
8) Remove water pump pulley.
9) Remove A/C compressor bracket and P/S pump bracket from cylinder block.
10) Remove oil gallery pipes No.2 (1) and No.3 (2).

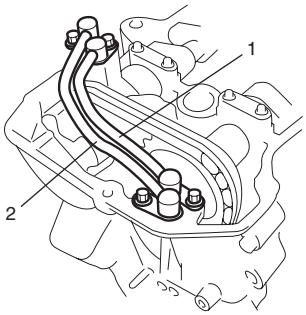


I3RH0B140021-01

11) Remove water outlet pipe (1) from timing chain cover.
12) Remove timing chain cover (2).

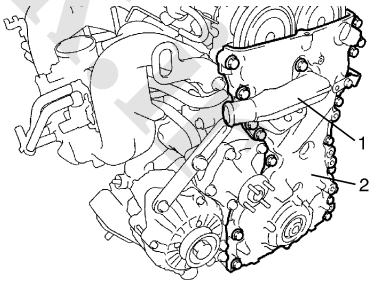


I5JB0A141022-01

13) Remove oil control valve from timing chain cover referring to “Oil Control Valve Removal and Installation: For M16A Engine with VVT”, if necessary.

www.cargeek.ir

www.CarGeek.ir

### Installation

1) Clean sealing surface on timing chain cover, cylinder block and cylinder head.
   Remove oil, old sealant and dust from sealing surface.
2) Install oil seal (1) to timing chain cover, if removed.

**NOTE**

**When installing new oil seal, press fit to timing chain cover (2) by using special tool (bearing installer) as shown in the figure.**

**Drive in dimension**
**"a": 1.5 mm (0.06 in.)**

**Special tool**
**(A): 09913–75810**

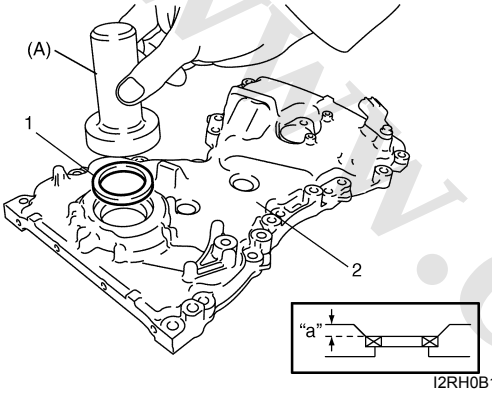

I2RH0B140058-01

3) Install oil control valve to timing chain cover referring to "Oil Control Valve Removal and Installation: For M16A Engine with VVT".
4) Apply sealant "A" to mating surface of cylinder and cylinder head and "B" to mating surface of timing chain cover as shown in the figure.

**"A": Water tight sealant 99000–31140 (SUZUKI Bond No.1207B)**
**"B": Sealant 99000–31260 (SUZUKI Bond No.1217G)**

**Sealant amount for timing chain cover**
**Width "a": 3 mm (0.12 in.)**
**Height "b": 2 mm (0.08 in.)**

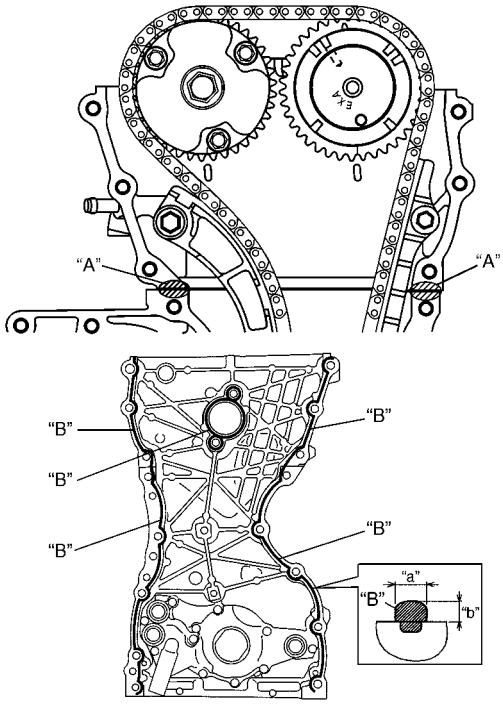

I3RH0B140025-01

5) Apply engine oil to oil seal lip, then install timing chain cover (1). Tighten bolts and nut to specified torque.

**NOTE**

**Before installing timing chain cover, check that pin is securely fitted.**

**Tightening torque**
**Timing chain cover bolt and nut (a): 25 N·m (2.5 kgf-m, 18.0 lb-ft)**

6) Apply engine oil to new O-rings and install them to water outlet pipe (2).
7) Install water outlet pipe (2) to timing chain cover (1).

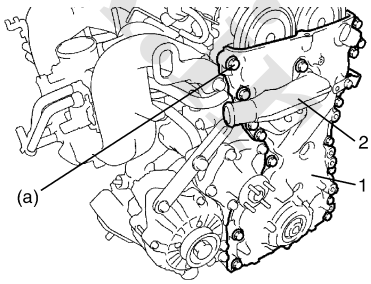

I5JB0A141023-02

8) Install new O-ring (1) to oil gallery pipes No.2 (2) and No.3 (3).

www.cargeek.ir

www.CarGeek.ir


9) Install oil gallery pipes No.2 and No.3 to cylinder head (4) and timing chain cover (5).
Tighten bolts to specified torque.

**Tightening torque**
**Oil gallery pipe No.2 and No.3 bolt (a): 11 N·m ( 1.1 kgf-m, 8.0 lb-ft)**

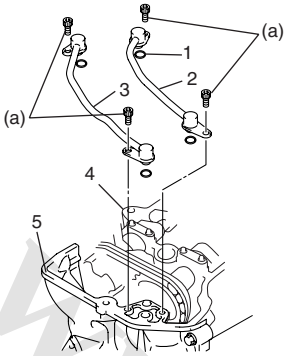

I3RH0B140027-01

10) Install water pump pulley.
11) Install oil pan referring to “Oil Pan and Oil Pump Strainer Removal and Installation: For M16A Engine with VVT in Section 1E”.
12) Install cylinder head cover referring to “Cylinder Head Cover Removal and Installation: For M16A Engine with VVT”.
13) Install crankshaft pulley (1). Tighten bolt (2) to specified torque. To lock crankshaft pulley, use special tool with it as shown in the figure.

**Special tool**
**(A): 09917–68221**

**Tightening torque**
**Crankshaft pulley bolt (a): 150 N·m (15.0 kgf-m, 108.5 lb-ft)**

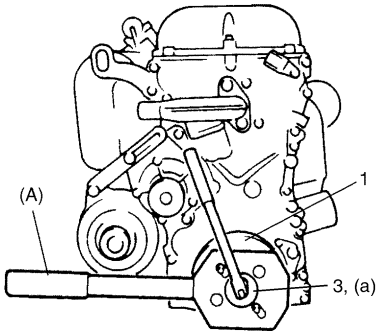

I5JB0A141024-01

14) Install water pump and generator drive belt referring to “Water Pump and Generator Drive Belt Removal and Installation (For M16 Engine): in Section 1J”.
15) Install P/S pump and A/C compressor drive belt referring to “P/S Pump and A/C Compressor (If Equipped) Drive Belt Removal and Installation for M16 Engine Model: in Section 6C”.
16) Install engine assembly to vehicle referring to “Engine Assembly Removal and Installation: For M16A Engine with VVT”.

## Timing Chain Cover Inspection

S5JB0A1416016

### Oil Seal

Check oil seal lip for fault or other damage. Replace as necessary.

### Timing Chain Cover

Inspect strainer (1) of oil passage for driving intake cam timing sprocket assembly (VVT actuator).
If clog or foreign matter exists, clean strainer.

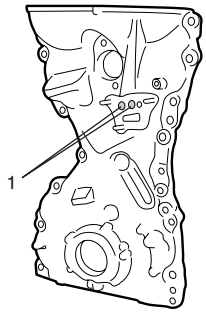

I3RH0B140028-01

## Oil Control Valve Removal and Installation

S5JB0A1416043

### Removal

1) Drain engine oil referring to “Engine Oil and Filter Change: in Section 0B”.
2) Remove P/S pump and A/C compressor drive belt referring to “P/S Pump and A/C Compressor (If Equipped) Drive Belt Removal and Installation for M16 Engine Model: in Section 6C”.
3) With hose connected, detach P/S pump from its bracket referring to “P/S Pump Removal and Installation for M16 Engine Model: in Section 6C”.

**⚠ CAUTION**

**Suspend removed P/S pump at a place where no damage will be caused during removal and installation of engine assembly.**

4) Remove P/S pump bracket.
5) Remove oil gallery pipe No.1 (1) and oil control valve (2) from timing chain cover (3).

www.cargeek.ir

www.CarGeek.ir

### Installation

1) Install new O-ring (4) to oil control valve.
2) Install oil control valve to timing chain cover.
   Tighten nuts to specification.

   **Tightening torque**
   **Oil control valve mounting nut (a): 11 N·m (1.1 kgf-m, 8.0 lb-ft)**

3) Install oil gallery pipe No.1 with new copper washers (5) to timing chain cover.
   Tighten bolts to specification.

   **Tightening torque**
   **Oil gallery pipe No.1 bolt (b): 30 N·m (3.0 kgf-m, 21.5 lb-ft)**

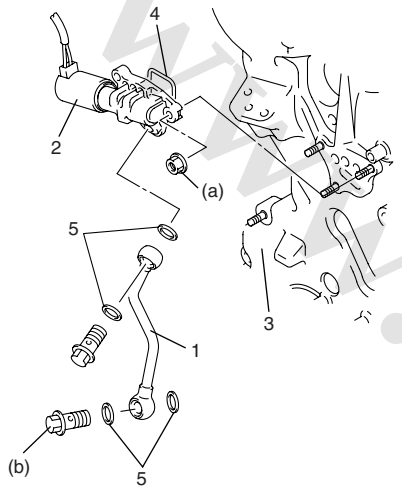


I3RM0A140027-01

4) Install P/S pump bracket.
5) Install P/S pump to its bracket referring to “P/S Pump Removal and Installation for M16 Engine Model: in Section 6C”.
6) Install P/S pump and A/C compressor drive belt referring to “P/S Pump and A/C Compressor (If Equipped) Drive Belt Removal and Installation for M16 Engine Model: in Section 6C”.
7) Adjust P/S pump and A/C compressor drive belt tension referring to “P/S Pump and A/C Compressor (If Equipped) Drive Belt Inspection and Adjustment for M16 Engine Model: in Section 6C”.
8) Refill engine with engine oil referring to “Engine Oil and Filter Change: in Section 0B”.

## Oil Control Valve Inspection

S5JB0A1416044

### Oil Control Valve

1) Inspect strainer (1) and mating surface (2) of oil control valve for clog or damage. Clean oil control valve if clog or foreign matter is present on strainer or mating surface of oil control valve.
   Replace oil control valve if its mating surface is damaged.
2) Check resistance between terminals of oil control valve.

   **Oil control valve resistance**
   **6.7 – 7.7 Ω (at 20 °C (68 °F))**

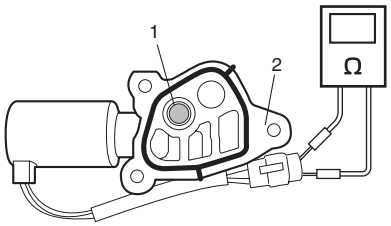


I3RM0A140028-01

### Oil Gallery Pipe

Inspect oil gallery pipe No.1 (1), No.2 (2) and No.3 (3). Replace if crack, deformation or clog exists.

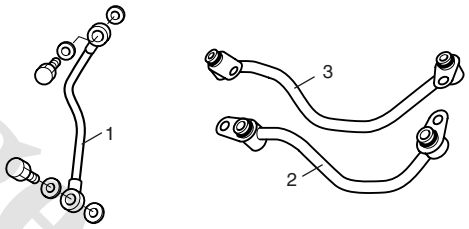


I3RH0B140030-01

www.cargeek.ir

www.CarGeek.ir


## Timing Chain and Chain Tensioner Components

S5JB0A1416017

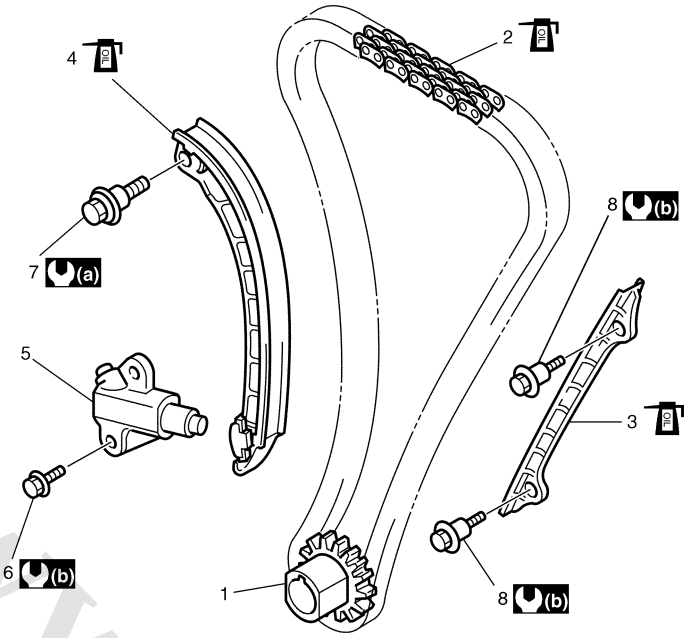


I4RS0A140012-01

| | | |
|---|---|---|
| 1. Crankshaft timing sprocket | 5. Timing chain tensioner adjuster assembly | (a) : 25 N·m (2.5 kgf-m, 18.0 lb-ft) |
| 2. Timing chain<br>: Apply engine oil. | 6. Chain tensioner adjuster mounting bolt | (b) : 11 N·m (1.1 kgf-m, 8.0 lb-ft) |
| 3. Timing chain No.1 guide<br>: Apply engine oil to sliding surface. | 7. Timing chain tensioner bolt | |
| 4. Timing chain tensioner<br>: Apply engine oil to sliding surface. | 8. Timing chain No.1 guide bolt | |

## Timing Chain and Chain Tensioner Removal and Installation

S5JB0A1416018

### Removal

**⚠ CAUTION**

**After timing chain is removed, never turn crankshaft and camshafts independently more than its allowable turning range described in "Installation".**
**If turned, interference may occur between piston and valves and valves themselves, and parts related to piston and valves may be damaged.**

1) Remove timing chain cover referring to "Timing Chain Cover Removal and Installation: For M16A Engine with VVT".
2) By turning crankshaft, align both intake and exhaust camshaft timing sprocket marks (1) with notches (2) of cylinder head respectively and align crankshaft sprocket key (3) with notch of cylinder block (4).
3) Remove timing chain tensioner adjuster assembly (5).
4) Remove timing chain tensioner (6).
5) Remove timing chain No.1 guide (7).
6) Remove timing chain (8) with crankshaft timing sprocket (9).

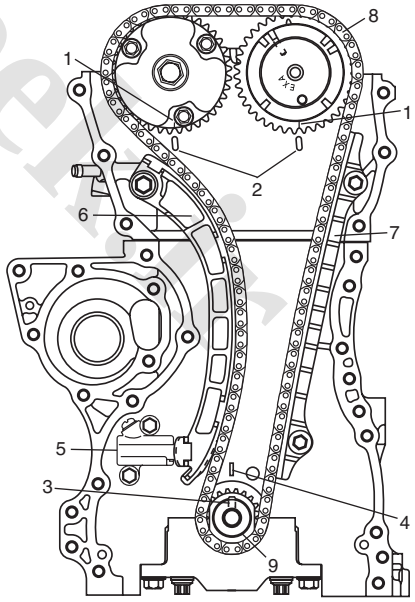


I3RH0B140032-01

www.cargeek.ir

www.CarGeek.ir

## Installation

**⚠ CAUTION**

**After timing chain is removed, never turn crankshaft and camshafts independently more than such an extent (“a”, “b”) as shown in the figure.**
**If turned, interference may occur between piston and valves and valves themselves, and parts related to piston and valves may be damaged.**

1) Check that match marks (1) on intake and exhaust camshaft timing sprockets are in match with notches (2) on cylinder head as shown in the figure.
2) Set key (3) and turn crankshaft to position key on upside of crankshaft.

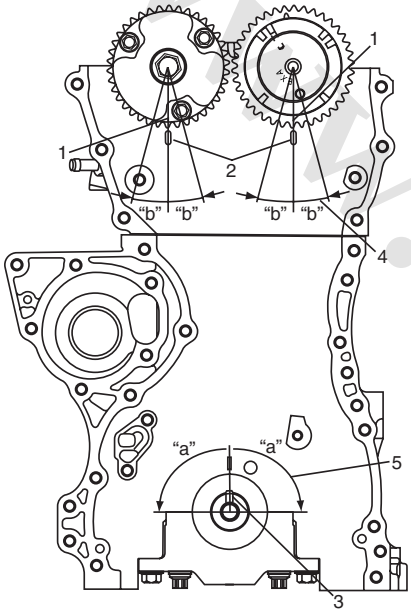

I4RS0A140021-01

| | |
|---|---|
| “a”: 90° | 4. Camshaft (IN and EX) allowable turning range. By marks on camshaft timing sprocket within 15° from notches on cylinder head on both right and left. |
| “b”: 15° | 5. Crankshaft allowable turning range. By key on crankshaft, within 90° from top on both right and left. |

3) Install timing chain by aligning dark blue plate (1) of timing chain and triangle mark (2) on camshaft timing sprocket as shown in the figure.
4) Fit crankshaft timing sprocket to timing chain by aligning gold plate (3) of timing chain and circle mark (4) on crankshaft timing sprocket. Then install crankshaft timing sprocket fitted with chain to crankshaft.

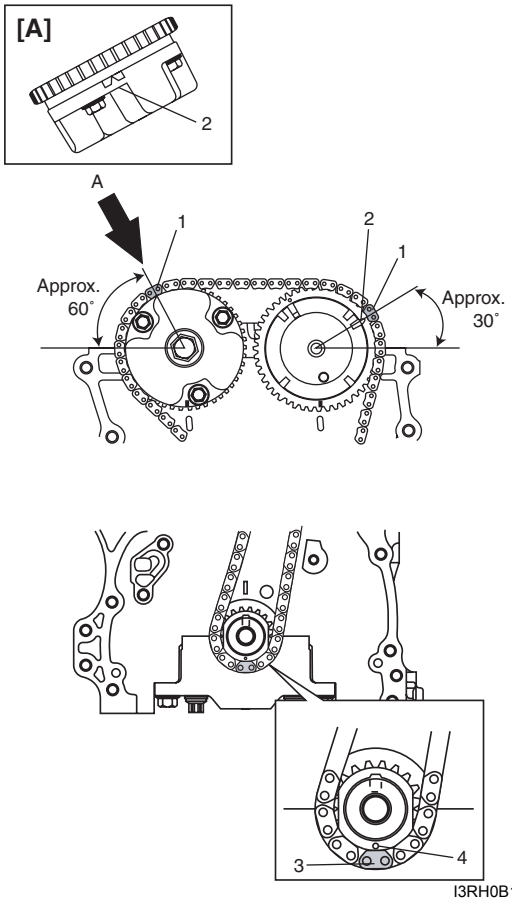

I3RH0B140034-01

[A]: View A

5) Apply engine oil to sliding surface of timing chain No.1 guide (1) and install it as shown in the figure. Tighten guide bolts to specified torque.

**Tightening torque**
**Timing chain No.1 guide bolt (a): 11 N·m (1.1 kgf-m, 8.0 lb-ft)**

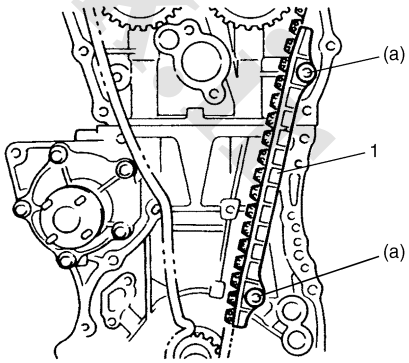

I2RH0B140062-01

www.cargeek.ir

www.CarGeek.ir


6) Apply engine oil to sliding surface of chain tensioner (1) and install chain tensioner and spacer.
Tighten tensioner bolt to specified torque.

**Tightening torque**
**Timing chain tensioner bolt (a): 25 N·m (2.5 kgf-m, 18.0 lb-ft)**

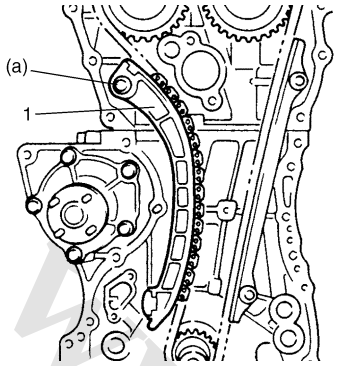

I2RH0B140063-01

7) Check that match marks (1) on intake and exhaust camshaft timing sprockets are in match with dark blue plates (2) of timing chain and match mark (3) on crankshaft timing sprocket is in match with gold plate (4) of timing chain.

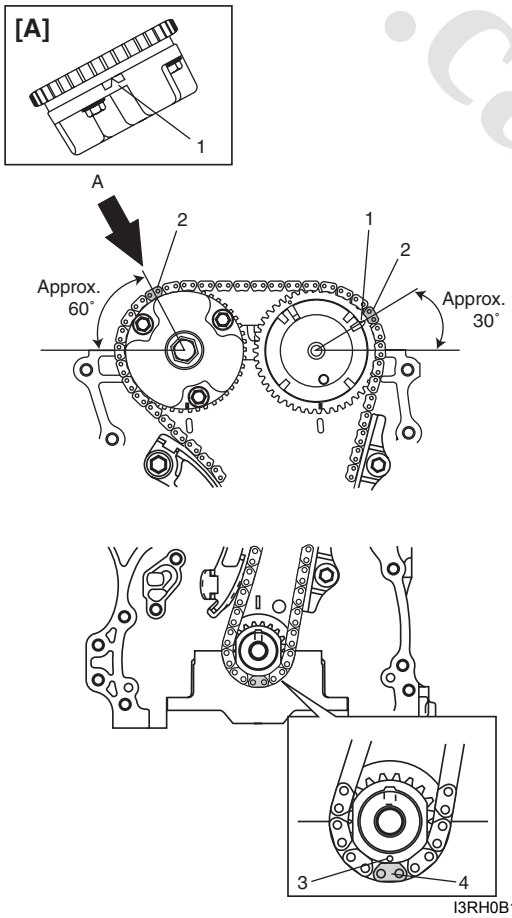

I3RH0B140035-01

[A]: View A

8) Screw in plunger (1) by turning body (2) in arrow direction and install a retainer (3) (wire) to hold plunger in place.

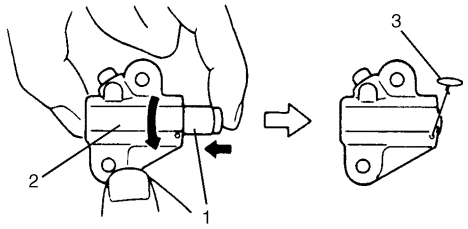

I2RH0B140065-01

9) Install timing chain tensioner adjuster assembly (1) with a retainer (2).
Tighten adjuster bolts to specified torque and then remove a retainer from chain tensioner adjuster assembly.

**Tightening torque**
**Timing chain tensioner adjuster bolt (a): 11 N·m (1.1 kgf-m, 8.0 lb-ft)**

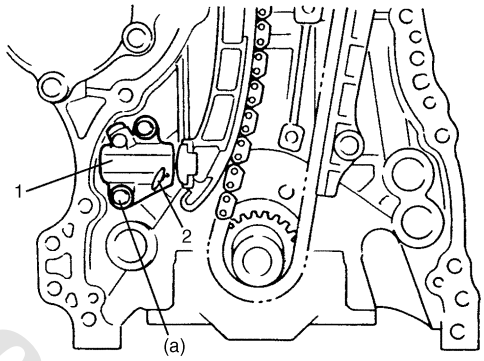

I2RH0B140066-01

www.cargeek.ir

www.CarGeek.ir

10) Apply engine oil to timing chain and then turn crankshaft clockwise by 2 revolutions and check that match marks (1) on intake and exhaust camshaft timing sprockets are in match with notches (2) on cylinder head and key (3) is in match with notch (4) on cylinder black as shown in the figure.
If each marking chain and each match mark are no matches, adjust each sprockets and timing chain.

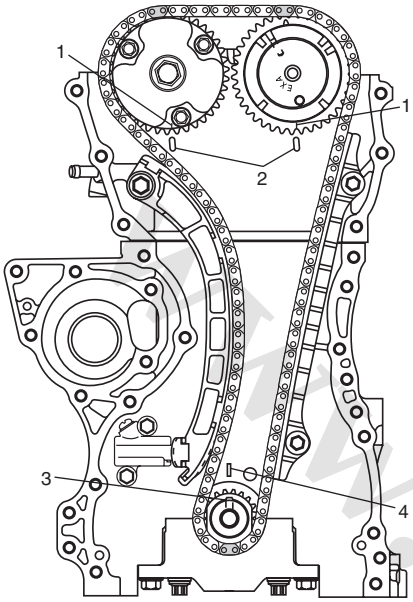

I3RH0B140036-01

11) Install timing chain cover referring to “Timing Chain Cover Removal and Installation: For M16A Engine with VVT”.
12) Perform Steps 3) to 8) of “Installation” of “Timing Chain Cover Removal and Installation: For M16A Engine with VVT”.

## Timing Chain and Chain Tensioner Inspection

S5JB0A1416019

### Timing Chain No.1 Guide

Check shoe (1) for wear or damage.

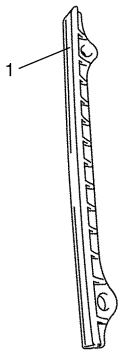

I2RH0B140068-01

### Timing Chain Tensioner

Check shoe (1) for wear or damage.

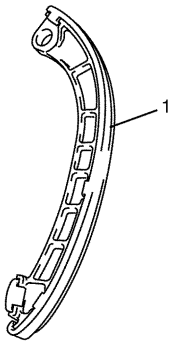

I2RH0B140069-01

### Crankshaft Timing Sprocket

Check teeth of sprocket for wear or damage.

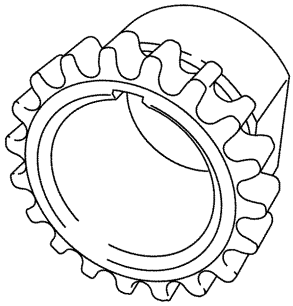
I2RH0B140070-01

### Timing Chain

Check timing chain for wear or damage.

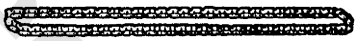
I2RH01140077-01

### Timing Chain Tensioner Adjuster

Check that tooth surface (1) are free from damage.

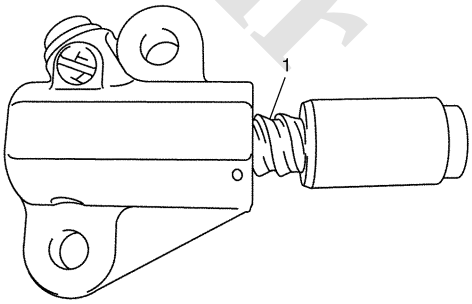

I2RH0B140071-01

www.cargeek.ir

www.CarGeek.ir


## Camshaft, Tappet and Shim Components

S5JB0A1416020

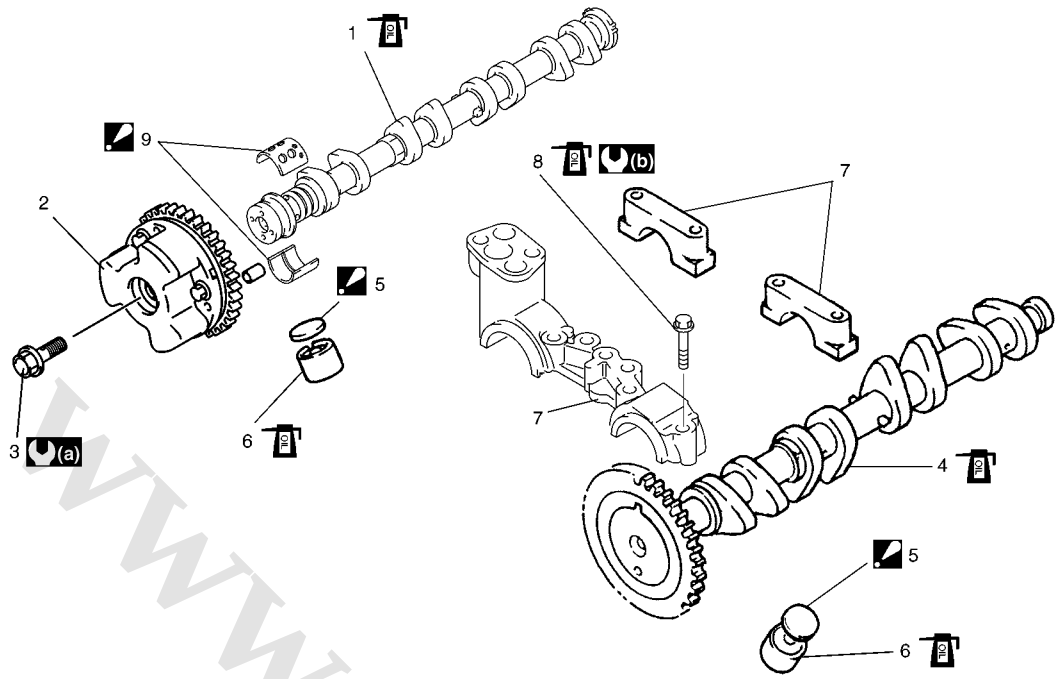


I4RS0A140013-01

| | | |
|---|---|---|
| 1. Intake camshaft | 5. Shim<br>: Shim No. on it faces tappet side. | 9. Upper camshaft bearing<br>: Install a bearing half with some holes to upper side of intake camshaft No.1 bearing. |
| 2. Intake camshaft sprocket assembly | 6. Tappet | (a) : 60 N·m (6.0 kgf-m, 43.5 lb-ft) |
| 3. Intake camshaft sprocket bolt | 7. Camshaft housing | (b) : 11 N·m (1.1 kgf-m, 8.0 lb-ft) |
| 4. Exhaust camshaft | 8. Camshaft housing bolt | : Apply engine oil to sliding surface of each part. |

## Camshaft, Tappet and Shim Removal and Installation

S5JB0A1416021

**⚠ CAUTION**

- **Keep working table, tools and hands clean while overhauling.**
- **Use special care to handle aluminum parts so as not to damage them.**
- **Do not expose removed parts to dust. Keep them always clean.**

### Removal

1) Remove timing chain cover referring to “Timing Chain Cover Removal and Installation: For M16A Engine with VVT”.
2) Remove timing chain referring to “Timing Chain and Chain Tensioner Removal and Installation: For M16A Engine with VVT”.
3) With hexagonal section (1) of intake camshaft (2) held stationary with spanner or the like, loosen mounting bolt of intake cam timing sprocket assembly (3) and remove it.

**⚠ CAUTION**

**Never attempt to loosen mounting bolt with intake cam timing sprocket assembly held stationary. Failure to follow this could result in damage to lock pin.**
**Do not loosen bolt “a” because intake cam timing sprocket assembly is not serviceable.**

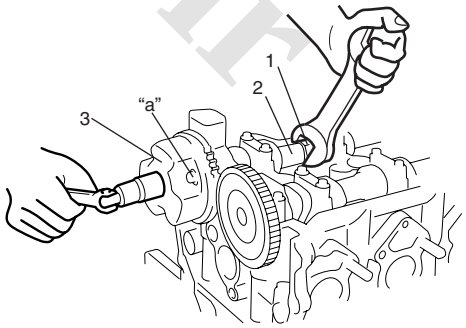


I3RM0A140030-01

www.cargeek.ir

www.CarGeek.ir

4) Loosen camshaft housing bolts in such order as indicated in the figure and remove them.

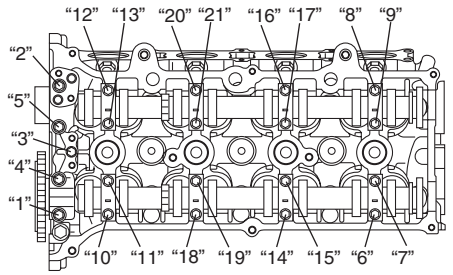

I3RM0A140031-01

5) Remove camshaft housings.
6) Remove intake and exhaust camshafts.
7) Remove camshaft bearing (1).

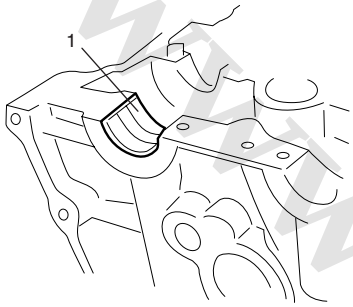

I3RH0B140039-01

8) Remove tappets (2) with shims (1).

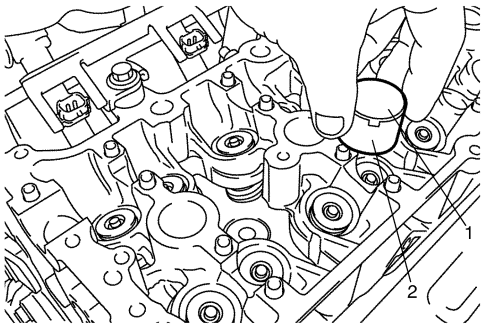

I2RH0B140074-01

**Installation**

1) Install tappets and shims to cylinder head.
Apply engine oil around tappet and then install it to cylinder head.

**NOTE**

**When installing shim, make sure to direct shim No. side toward tappet.**

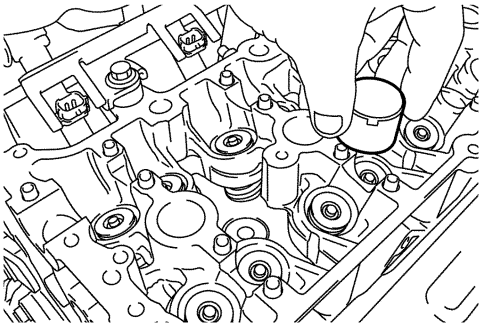
I2RH0B140075-01

2) Install camshaft bearing (1) to cylinder head.

**⚠ CAUTION**

**Do not apply engine oil to camshaft bearing back.**
**Only a upper half bearing of intake camshaft bearing No.1 has some holes. Other bearings.**

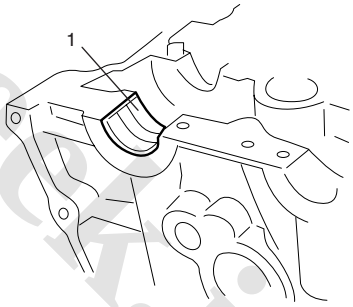

I3RH0B140039-01

3) Install intake camshaft (1) and exhaust camshaft (2).
Align knock pin (3) and match mark (4) with notches (5) as shown in the figure.

**NOTE**

**Before installing camshafts, turn crankshaft until key position faces upward.**
**Refer to "Timing Chain and Chain Tensioner Removal and Installation: For M16A Engine with VVT".**

www.cargeek.ir

www.CarGeek.ir


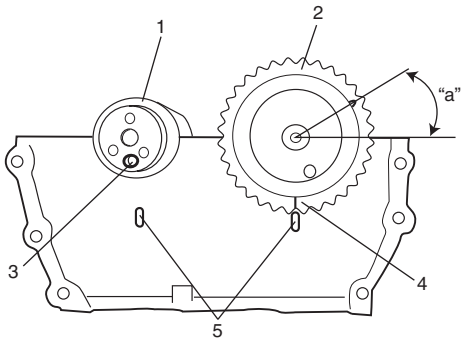


I4RS0A140014-01

| |
|---|
| "a": Approx. 30° |

4) Apply engine oil to sliding surface of each camshaft and camshaft journal then install them as shown in the figure.
5) Install camshaft housing pins (1) as shown in the figure.

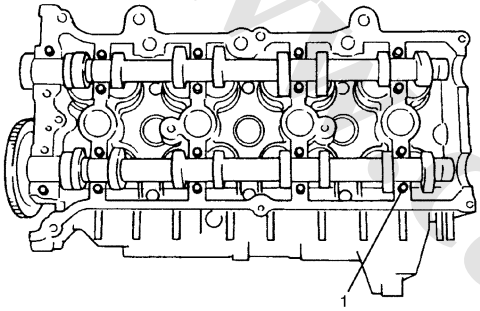


I3RM0A140033-01

6) Check position of camshaft housings.
Embossed marks are provided on each camshaft housing, indicating position and direction for installation. Install housings as indicated by these marks.

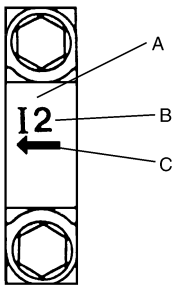


I2RH0B140078-01

| | |
|---|---|
| A: | I: Intake side or E: Exhaust side |
| B: | Position from timing chain side |
| C: | Pointing to timing chain side |

7) After applying engine oil to housing bolts, tighten them temporarily first. Then tighten them by the numerical order in the figure. Tighten a little at a time and evenly among bolts and repeat tightening sequence two or three times before they are tightened to specified torque.

**Tightening torque**
**Camshaft housing bolt (a): 11 N·m (1.1 kgf-m, 8.0 lb-ft)**

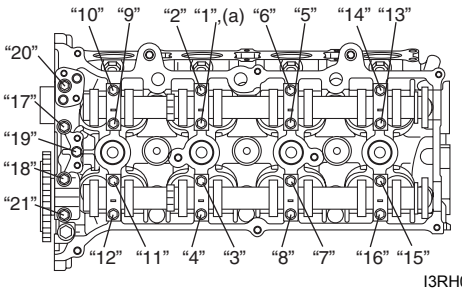


I3RH0B140041-01

8) With hexagonal section (1) of intake camshaft (2) held stationary with spanner or the like, tighten bolt of intake cam timing sprocket assembly (3) to specification.

**Tightening torque**
**Intake cam timing sprocket bolt (a): 60 N·m (6.0 kgf-m, 43.5 lb-ft)**

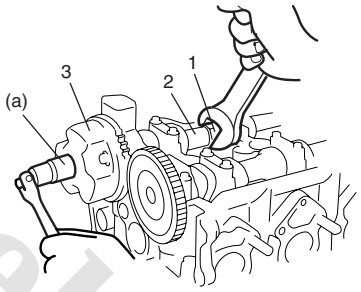


I3RH0B140042-01

9) Install timing chain with crankshaft sprocket referring to "Timing Chain and Chain Tensioner Removal and Installation: For M16A Engine with VVT".
10) Install timing chain cover referring to "Timing Chain Cover Removal and Installation: For M16A Engine with VVT".
11) Check valve lashes referring to "Valve Lash (Clearance) Inspection: For M16A Engine with VVT".
12) Perform Steps 3) to 8) of "Installation" of "Timing Chain Cover Removal and Installation: For M16A Engine with VVT".

www.cargeek.ir

www.CarGeek.ir

## Camshaft, Tappet and Shim Inspection

S5JB0A1416022

### Intake Cam Timing Sprocket Assembly

Fit intake cam timing sprocket assembly to camshaft (2) and hold hexagonal section of camshaft by using spanner or the like.
Check if sprocket (1) is not turned by hand.
If moved, replace intake cam timing sprocket assembly.

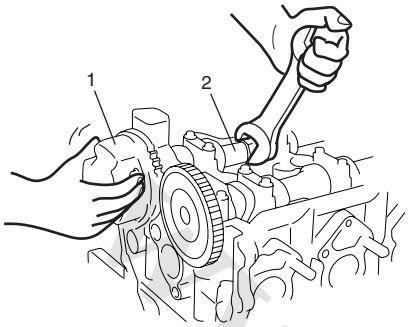


I3RH0B140043-01

### Cam Wear

Using a micrometer, measure cam height “a”. If measured height underruns its limit, replace camshaft.

**Cam height “a”**

| Cam height | Standard | Limit |
|---|---|---|
| Intake cam | 44.929 – 45.089 mm (1.769 – 1.775 in.) | 44.80 mm (1.764 in.) |
| Exhaust cam | 44.399 – 44.559 mm (1.748 – 1.754 in.) | 44.28 mm (1.743 in.) |

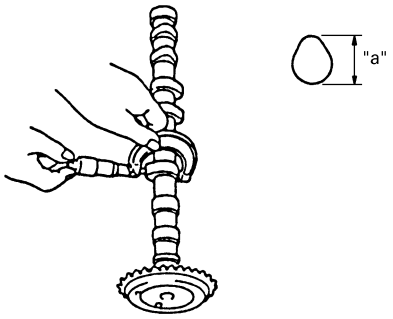


I2RH0B140080-01

### Camshaft Runout

Set camshaft between two “V” blocks, and measure its runout by using a dial gauge.
If measured runout exceeds limit, replace camshaft.

**Camshaft runout limit**
**0.10 mm (0.0039 in.)**

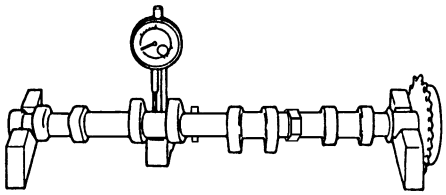

I2RH0B140081-01

### Camshaft Journal Wear

Check camshaft journals and camshaft housings for pitting, scratches, wear or damage.
If any malcondition is found, replace camshaft or cylinder head with housing. Never replace cylinder head without replacing housings.

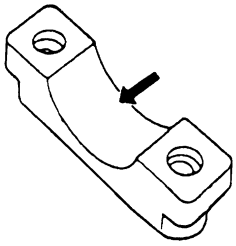

I2RH0B140082-01

Check clearance by using gauging plastic. Checking procedure is as follows.

1) Clean housings and camshaft journals.
2) Remove all tappets with shims.
3) Install camshafts to cylinder head.
4) Place a piece of gauging plastic to full width of journal of camshaft (parallel to camshaft).
5) Install camshaft housing.

www.cargeek.ir

www.CarGeek.ir


6) Tighten camshaft housing bolts in such order as indicated in the figure a little at a time till they are tightened to specified torque.

**NOTE**

**Do not rotate camshaft while gauging plastic is installed.**

**Tightening torque**
**Camshaft housing bolt (a): 11 N·m (1.1 kgf-m, 8.0 lb-ft)**

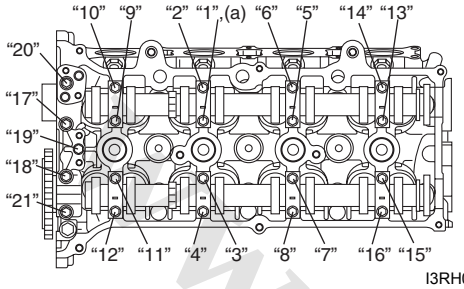

I3RH0B140041-01

7) Remove housing, and using scale (2) on gauging plastic envelop, measure gauging plastic (1) width at its widest point.

**Camshaft journal clearance**

| | Standard | Limit |
|---|---|---|
| Intake side No.1 housing | 0.020 – 0.072 mm (0.0008 – 0.0028 in.) | 0.10 mm (0.0039 in.) |
| Others | 0.045 – 0.087 mm (0.0018 – 0.0034 in.) | 0.12 mm (0.0047 in.) |

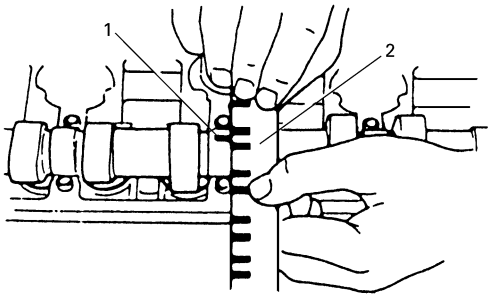

I2RH0B140083-01

If measured camshaft journal clearance exceeds limit, measure journal (housing) bore and outside diameter of camshaft journal. Replace camshaft or cylinder head assembly whichever the difference from specification is greater.

**Camshaft journal diameter [A]**

| Item | Standard |
|---|---|
| Intake side No.1 housing | 26.940 – 26.955 mm (1.0606 – 1.0612 in.) |
| Exhaust side No.1 housing | 26.934 – 26.955 mm (1.0604 – 1.0612 in.) |
| Others | 22.934 – 22.955 mm (0.9029 – 0.9037 in.) |

**Camshaft journal bearing bore [B]**

| Item | Standard |
|---|---|
| Intake side No.1 housing | — |
| Exhaust side No.1 housing | 27.000 – 27.021 mm (1.0630 – 1.0638 in.) |
| Others | 23.000 – 23.021 mm (0.9055 – 0.9063 in.) |

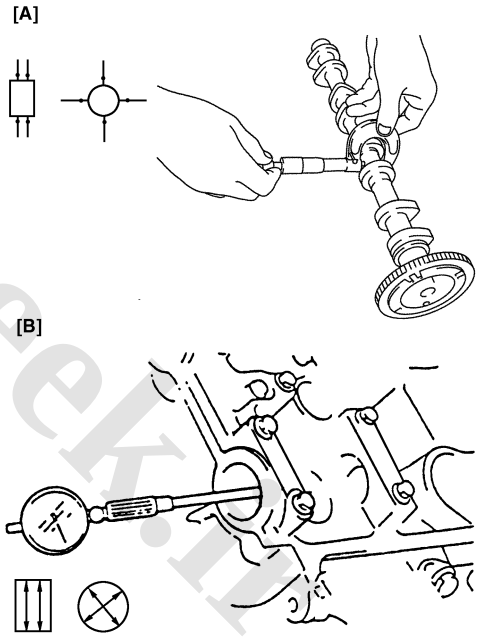

I2RH0B140084-01

www.cargeek.ir

www.CarGeek.ir

**Wear of Tappet and Shim**

Check tappet and shim for pitting, scratches, or damage.
If any malcondition is found, replace.

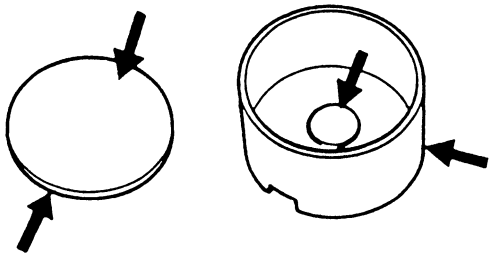

I2RH0B140085-01

Measure cylinder head bore and tappet outside diameter to determine cylinder head-to-tappet clearance. If clearance exceeds limit, replace tappet or cylinder head.

**Cylinder head to tappet clearance**
**Standard: 0.025 – 0.066 mm (0.0010 – 0.026 in.)**
**Limit: 0.15 mm (0.0059 in.)**

**Tappet outside diameter [A]**
**Standard: 30.959 – 30.975 mm (1.2189 – 1.2195 in.)**

**Cylinder head tappet bore [B]**
**Standard: 31.000 – 31.025 mm (1.2205 – 1.2215 in.)**

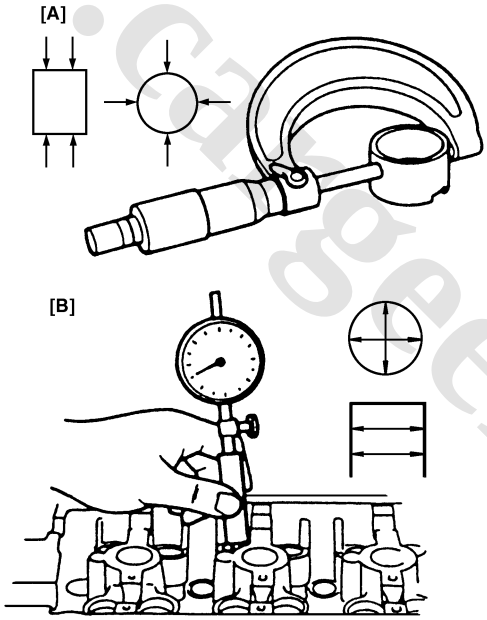


I2RH0B140086-01

www.cargeek.ir

www.CarGeek.ir


## Valves and Cylinder Head Components

S5JB0A1416023

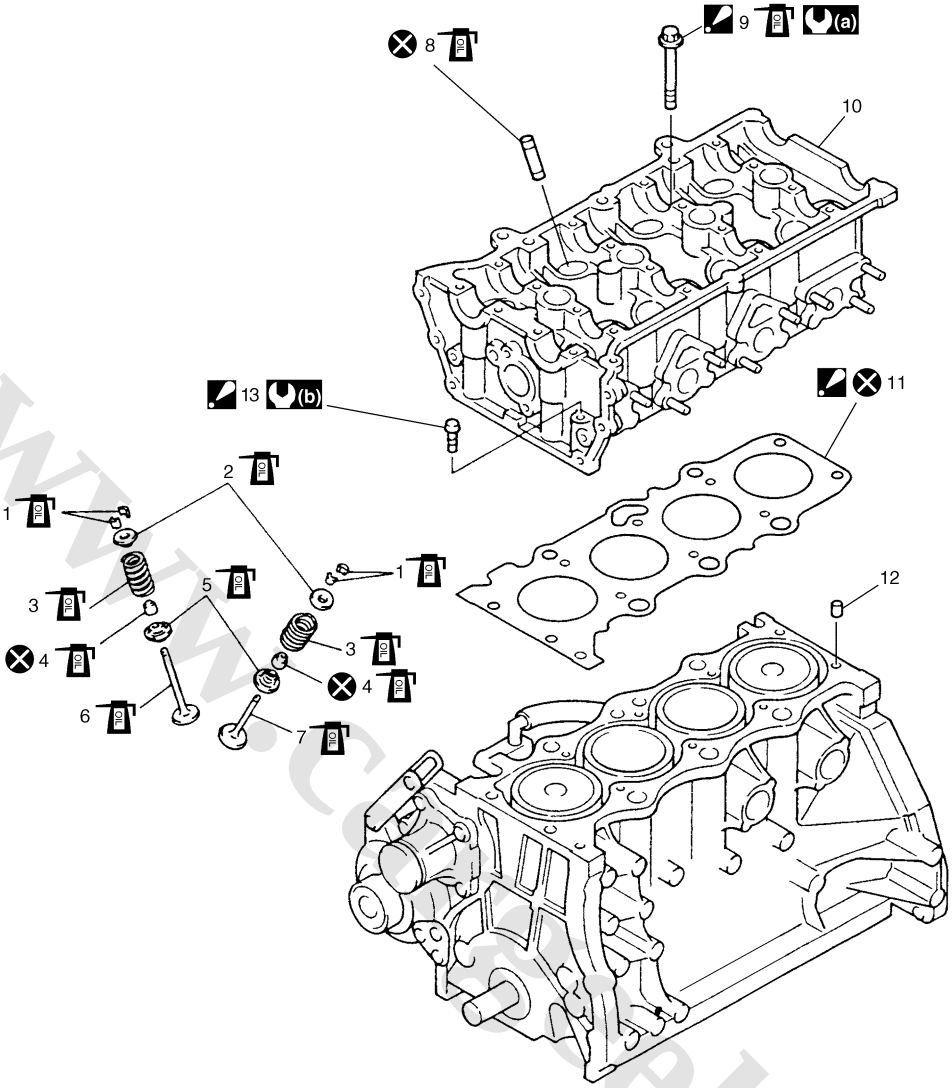


I4RS0A140015-01

| | | |
|---|---|---|
| 1. Valve cotters | 7. Exhaust valve | 13. Cylinder head bolt (M8)<br>: Be sure to tighten cylinder head bolt (M8) after securing the other cylinder head bolt (M10). |
| 2. Valve spring retainer | 8. Valve guide | (a) : Tighten 20 N·m (2.0 kgf-m, 14.5 lb-ft), 40 N·m (4.0 kgf-m, 29.0 lb-ft), 60° and 60° by the specified procedure. |
| 3. Valve spring | 9. Cylinder head bolt (M10)<br>: Check cylinder head bolt (M10), plastic deformation tightening bolt, for deformation referring to “Cylinder Head Bolt” under “Valves and Valve Guides Inspection: For M16A Engine with VVT”, if it is reused. | (b) : 25 N·m (2.5 kgf-m, 18.0 lb-ft) |
| 4. Valve stem seal | 10. Cylinder head | : Do not reuse. |
| 5. Valve spring seat | 11. Cylinder head gasket<br>: “TOP” mark provided on gasket comes to crankshaft pulley side, facing up. | : Apply engine oil to sliding surface of each part. |
| 6. Intake valve | 12. Knock pin | |

www.cargeek.ir

www.CarGeek.ir

## Valves and Cylinder Head Removal and Installation

S5JB0A1416024

### Removal

1) Remove engine assembly from vehicle referring to “Engine Assembly Removal and Installation: For M16A Engine with VVT”.
2) Remove oil pan referring to “Oil Pan and Oil Pump Strainer Removal and Installation: For M16A Engine with VVT in Section 1E”.
3) Remove cylinder head cover referring to “Cylinder Head Cover Removal and Installation: For M16A Engine with VVT”.
4) Remove timing chain cover referring to Steps 3) to 13) of “Removal” in “Timing Chain Cover Removal and Installation: For M16A Engine with VVT”.
5) Remove timing chain referring to Steps 2) to 6) of “Removal” in “Timing Chain and Chain Tensioner Removal and Installation: For M16A Engine with VVT”.
6) Remove intake and exhaust camshafts referring to Steps 3) to 8) of “Removal” in “Camshaft, Tappet and Shim Removal and Installation: For M16A Engine with VVT”.
7) Loosen cylinder head bolts in such order as indicated in the figure by using a 12 corner socket wrenches and remove them.

**NOTE**

**Don’t forget to remove bolt (M8) (1) as shown in the figure.**

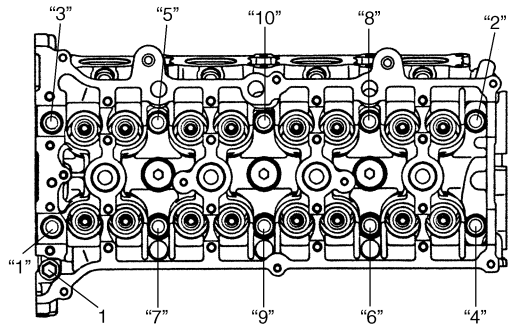


I2RH0B140088-01

8) Check all around cylinder head for any other parts required to be removed or disconnected and remove or disconnect whatever necessary.
9) Remove exhaust manifold referring to “Exhaust Manifold Removal and Installation (For M16 Engine Model): in Section 1K”, if necessary.
10) Remove cylinder head with intake manifold and exhaust manifold. Use lifting device, if necessary.

### Installation

1) Clean mating surface of cylinder head and cylinder block. Remove oil, old gasket and dust from mating surface.
2) Install knock pins (1) to cylinder block.
3) Install new cylinder head gasket (2) to cylinder block. “Top” mark or “Triangle/circle” provided on gasket comes to crankshaft pulley side, facing up (toward cylinder head side).

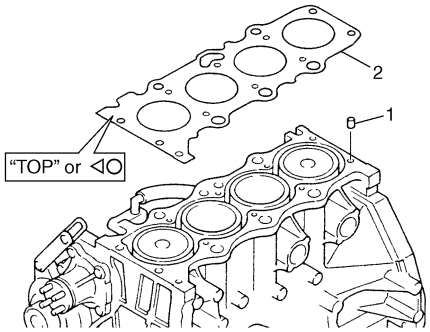


I4RS0B140018-01

4) Make sure that oil jet (venturi plug) (1) is not clogged. If it is not installed, install it as specified torque.

**Tightening torque**
**Venturi plug (a): 5 N·m (0.5 kgf-m, 3.5 lb-ft)**

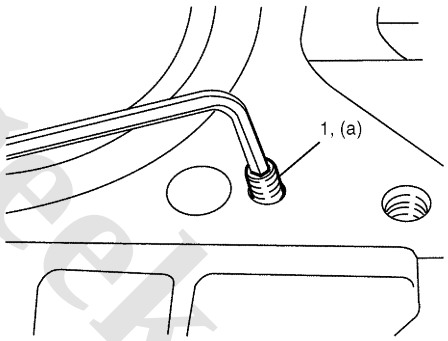


I2RH0B140089-01

5) Install cylinder head to cylinder block.
Apply engine oil to new cylinder head bolts and tighten them gradually as follows.

**NOTE**

**If cylinder head bolt (M10) is reused, make sure to check cylinder head bolt (M10) for deformation referring to “Cylinder Head Bolt” under “Cylinder Head Inspection: For M16A Engine with VVT”.**

a) Tighten cylinder head bolts (“1” – “10”) to 20 N·m (2.0 kgf-m, 14.5 lb-ft) according to numerical order as shown by using a 12 corner socket wrenches.
b) In the same manner as in Step a), tighten them to 40 N·m (4.0 kgf-m, 29.0 lb-ft).
c) Turn all bolts 60° according to numerical order in the figure.

www.cargeek.ir

www.CarGeek.ir


d) Repeat Step c).
e) Tighten bolt “A” to specified torque.

**NOTE**

**Be sure to tighten M8 bolt “A” after securing the other bolts.**

**Tightening torque**
**Cylinder head bolt for M8 (a): 25 N·m (2.5 kgf-m, 18.0 lb-ft)**
**Cylinder head bolt for M10 (b): 20 N·m (2.0 kgf-m, 14.5 lb-ft), 40 N·m (4.0 kgf-m, 29.0 lb-ft) and then retighten by turning through to 60° twice**

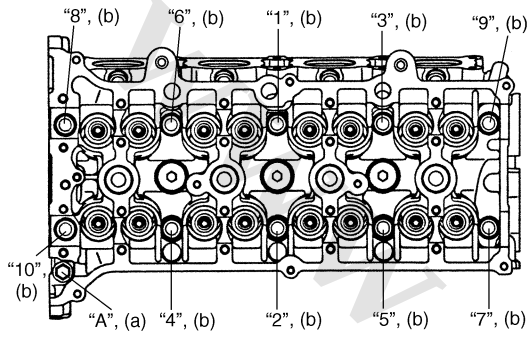

I2RH0B140091-01

6) Install camshafts, tappet and shim referring to “Camshaft, Tappet and Shim Removal and Installation: For M16A Engine with VVT”.
7) Install timing chain referring to “Timing Chain and Chain Tensioner Removal and Installation: For M16A Engine with VVT”.
8) Install timing chain cover referring to “Timing Chain Cover Removal and Installation: For M16A Engine with VVT”.
9) Install cylinder head cover referring to “Cylinder Head Cover Removal and Installation: For M16A Engine with VVT”.
10) Install oil pan referring to “Oil Pan and Oil Pump Strainer Removal and Installation: For M16A Engine with VVT in Section 1E”.

## Valves and Cylinder Head Disassembly and Assembly

S5JB0A1416025

### Disassembly

1) For ease in servicing cylinder head, remove intake manifold, injectors, exhaust manifold from cylinder head.
2) Using special tools (Valve lifter), compress valve spring and then remove valve cotters (1) also by using special tool (Forceps).

**Special tool**
**(A): 09916–14510**
**(B): 09916–14521**
**(C): 09916–84511**

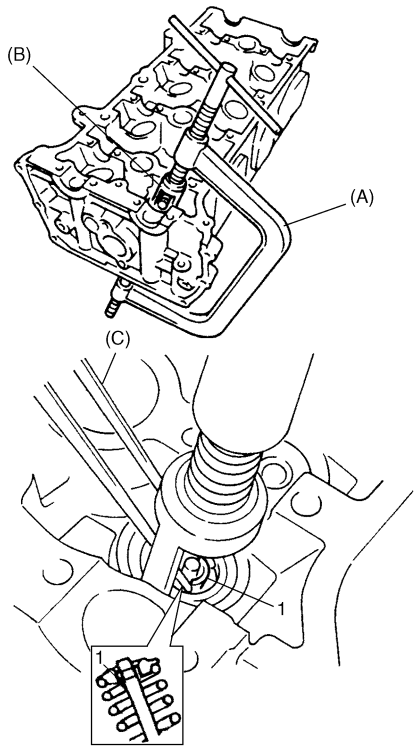

I2RH0B140093-01

3) Release special tools (Valve lifter), and remove spring retainer and valve spring.
4) Remove valve from combustion chamber side.
5) Remove valve stem seal (1) from valve guide and valve spring seat (2).

**NOTE**

**Do not reuse valve stem seal once disassembled. Be sure to use new seal when assembling.**

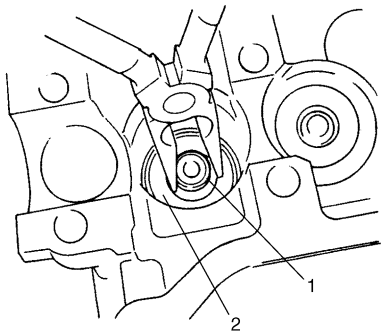

I2RH0B140094-01

www.cargeek.ir

www.CarGeek.ir

6) Using special tool (Valve guide remover), drive valve guide out from combustion chamber side to valve spring side.

**Special tool**
**(A): 09916–44910**

**NOTE**

**Do not reuse valve guide once disassembled. Be sure to use new valve guide (oversize) when assembling.**

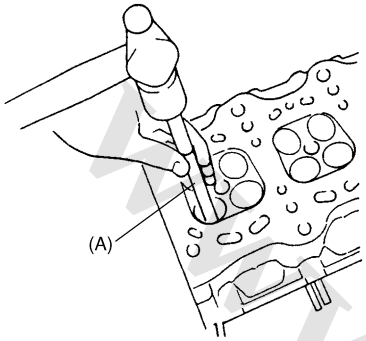


I2RH0B140095-01

7) Place disassembled parts except valve stem seal and valve guide in order so that they can be installed in their original position.

## Assembly

1) Before installing valve guide into cylinder head, ream guide hole with special tool (10.5 mm reamer) so as to remove burrs and make it truly round.

**Special tool**
**(A): 09916–34542**
**(B): 09916–37320**

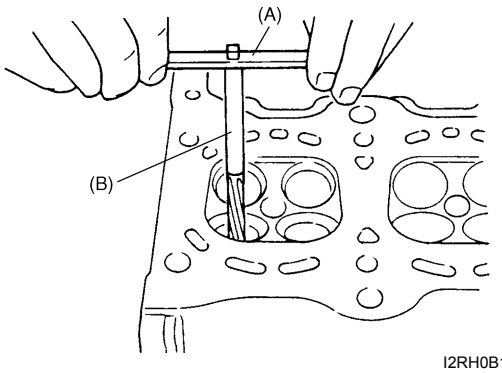


I2RH0B140096-01

2) Install valve guide to cylinder head.
Heat cylinder head uniformly at a temperature of 80 to 100 °C (176 to 212 °F) so that head will not be distorted, and drive new valve guide into hole with special tools.
Drive in new valve guide until special tool (Valve guide installer) contacts cylinder head.
After installing, make sure that valve guide protrudes by specified dimension “a” from cylinder head.

**Special tool**
**(A): 09916–58210**
**(B): 09916–56011**

**NOTE**

- **Never reuse valve guide once disassembled. Make sure to install new valve guide (Oversize).**
- **Intake and exhaust valve guides are identical.**

**Valve guide protrusion (In and Ex)**
**“a”: 11.3 mm (0.44 in.)**

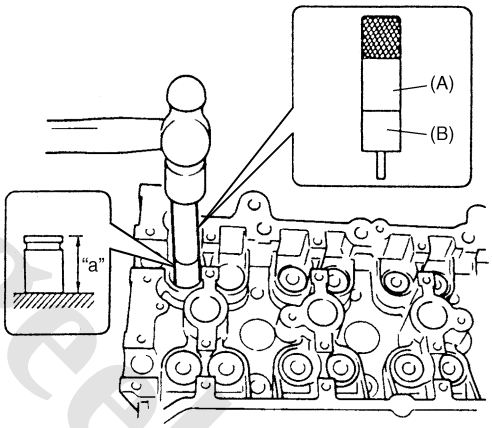


I2RH0B140097-01

3) Ream valve guide bore with special tool (5.5 mm reamer). After reaming, clean bore.

**Special tool**
**(A): 09916–34542**
**(B): 09916–34550**

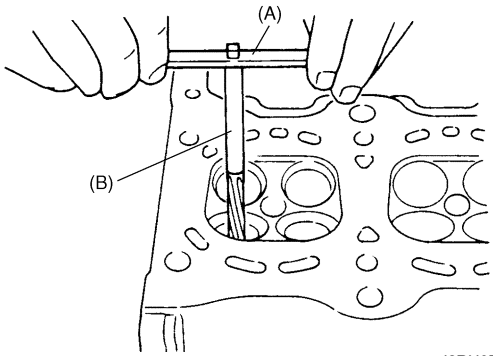


I2RH0B140096-01

www.cargeek.ir

www.CarGeek.ir


4) Install valve spring seat to cylinder head.
5) Install new valve stem seal (1) to valve guide.
After applying engine oil to seal and spindle of special tool (Valve guide installer handle), fit oil seal to spindle, and then install seal to valve guide by pushing special tool by hand.
After installing, check to be sure that seal is properly fixed to valve guide.

**Special tool**
**(A): 09917–98221**
**(B): 09916–58210**

**NOTE**

- **Do not reuse seal once disassembled. Be sure to install new seal.**
- **When installing, never tap or hit special tool with a hammer or else. Install seal to guide only by pushing special tool by hand. Tapping or hitting special tool may cause damage to seal.**

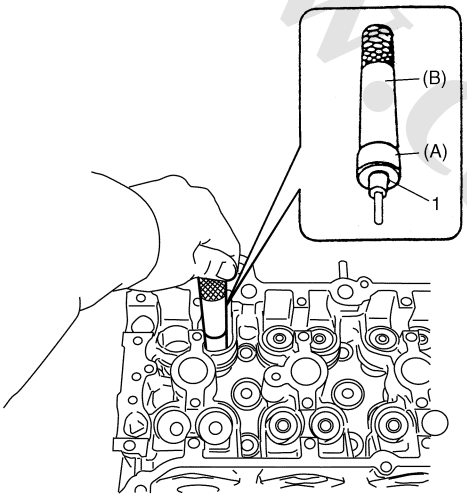


I2RH0B140098-01

6) Install valve to valve guide.
Before installing valve to valve guide, apply engine oil to stem seal, valve guide bore and valve stem.

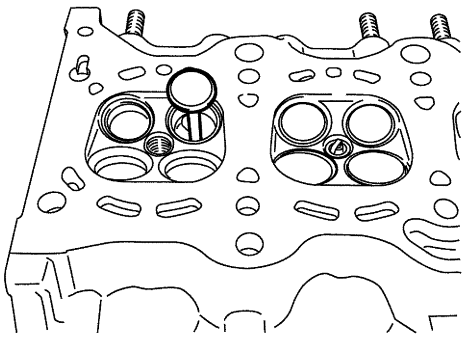

I2RH0B140099-01

7) Install valve spring and spring retainer.
Each valve spring has top end (large-pitch end (1)) and bottom end (small-pitch end (2)). Be sure to position spring in place with its bottom end (small-pitch end) facing the bottom (valve spring seat side).

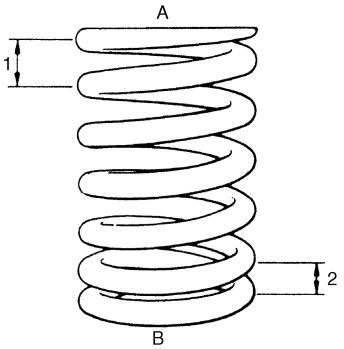


I2RH0B140100-01

| | |
|---|---|
| A: Valve spring retainer side | B: Valve spring seat side |

8) Using special tools (Valve lifter), compress valve spring and fit two valve cotters (1) into groove in valve stem.

**NOTE**

**When compressing the valve spring, be carefully to free from damage in inside face of tappet installing hole.**

**Special tool**
**(A): 09916–14510**
**(B): 09916–14521**
**(C): 09916–84511**

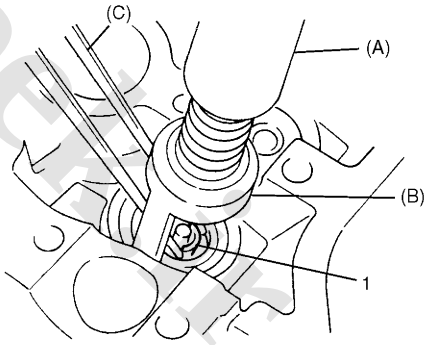


I2RH0B140101-01

9) Install intake manifold referring to “Intake Manifold Removal and Installation: For M16A Engine with VVT”.
10) Install fuel injectors referring to “Fuel Injector Removal and Installation: in Section 1G”.
11) Install exhaust manifold referring to “Exhaust Manifold Removal and Installation (For M16 Engine Model): in Section 1K”.

www.cargeek.ir

www.CarGeek.ir

## Valves and Valve Guides Inspection

S5JB0A1416026

### Valve Guide

**Valve stem-to-guide clearance**

Using a micrometer and bore gauge, take diameter readings on valve stems and guides to check stem-to-guide clearance.
Be sure to take reading at more than one place along the length of each stem and guide.
If clearance exceeds limit, replace valve and valve guide.

**Valve stem and valve guide specification**

| Item | | Standard | Limit |
|---|---|---|---|
| Valve stem diameter [A] | In | 5.465 – 5.480 mm (0.2150 – 0.2157 in.) | — |
| | Ex | 5.440 – 5.455 mm (0.2142 – 0.2148 in.) | — |
| Valve guide bore [B] | In & Ex | 5.500 – 5.512 mm (0.2165 – 0.2170 in.) | — |
| Stem-to-guide clearance | In | 0.020 – 0.047 mm (0.0008 – 0.0018 in.) | 0.070 mm (0.0028 in.) |
| | Ex | 0.045 – 0.072 mm (0.0017 – 0.0028 in.) | 0.090 mm (0.0035 in.) |

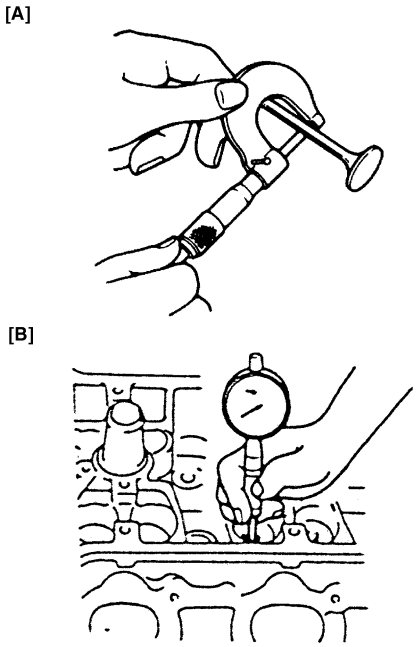


I3RM0A140035-01

**Valve stem end deflection**

If bore gauge is not available, check end deflection of valve stem with a dial gauge instead.
Move stem end in directions (1) and (2) to measure end deflection.
If deflection exceeds its limit, replace valve stem and valve guide.

**Valve stem end deflection limit**

**In: 0.14 mm (0.005 in.)**
**Ex: 0.18 mm (0.007 in.)**

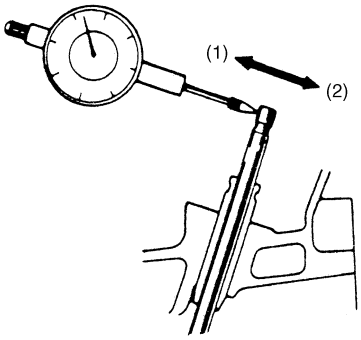


IYSQ01141096-01

### Valve

**Visual inspection**

- Remove all carbon from valves.
- Inspect each valve for wear, burn or distortion at its face and stem end, as necessary, replace it.
- Inspect valve stem end face for pitting and wear. If pitting or wear is found there, valve stem end may be resurfaced, but not too much to grind off its chamber. When it is worn out too much that its chamber is gone, replace valve.

I2RH01140135-01

**Valve head thickness**

Measure thickness “a” of valve head. If measured thickness exceeds limit, replace valve.

**Valve head thickness “a” (In and Ex)**

**Standard: 1.25 – 1.55 mm (0.049 – 0.061 in.)**
**Limit: 0.9 mm (0.035 in.)**

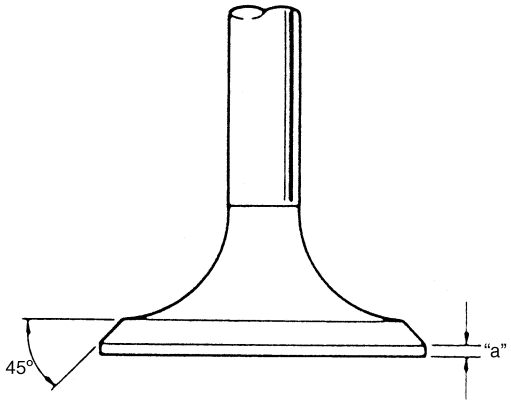


I2RH0B140102-01

www.cargeek.ir

www.CarGeek.ir


**Valve head radial runout**
Check each valve for radial runout with a dial gauge and "V" block. To check runout, rotate valve slowly. If runout exceeds its limit, replace valve.

**Valve head radial runout**
**Limit: 0.08 mm (0.003 in.)**

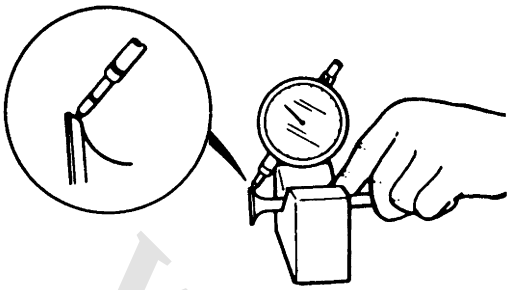

I2RH01140136-01

**Seating contact width**
Create contact pattern on each valve in the usual manner, i.e., by giving uniform coat of marking compound to valve seat and by rotatingly tapping seat with valve head. Valve lapper (tool used in valve lapping) must be used.
Pattern produced on seating face of valve must be a continuous ring without any break, and the width of pattern must be within specified range.

**Standard seating width "a" revealed by contact pattern on valve face**
**Intake and Exhaust: 1.0 – 1.4 mm (0.0389 – 0.0551 in.)**

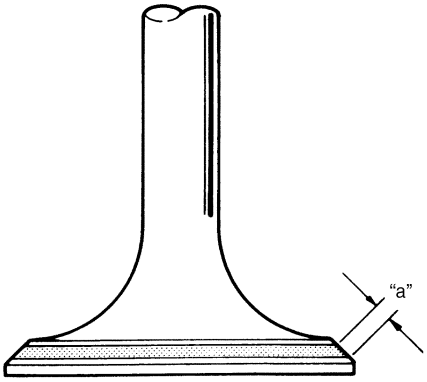


I2RH0B140103-01

**Valve seat repair**
A valve seat not producing a uniform contact with its valve or showing width of seating contact that is out of specified range must be repaired by regrinding or by cutting and regrinding and finished by lapping.

1) **Exhaust valve seat:**
Use valve seat cutters (1) to make two cuts as illustrated in the figure. Two cutters must be used: the first for making 22° angle, and the second for making 45° angle. The second cut must be made to produce desired seat width.

**Seat width for exhaust valve seat**
**"a": 1.0 – 1.4 mm (0.0389 – 0.0551 in.)**

2) **Intake valve seat:**
Use valve seat cutters (1) to make three cuts as illustrated in the figure. Three cutters must be used: the 1st for making 22° angle, the 2nd for making 60° angle, and 3rd for making 45° angle. The 3rd cut (45°) must be made to produce desired seat width.

**Seat width for intake valve seat**
**"b": 1.0 – 1.4 mm (0.0389 – 0.0551 in.)**

3) **Valve lapping:**
Lap valve on seat in two steps, first with coarse size lapping compound applied to face and the second with fine-size compound, each time using valve lapper according to usual lapping method.

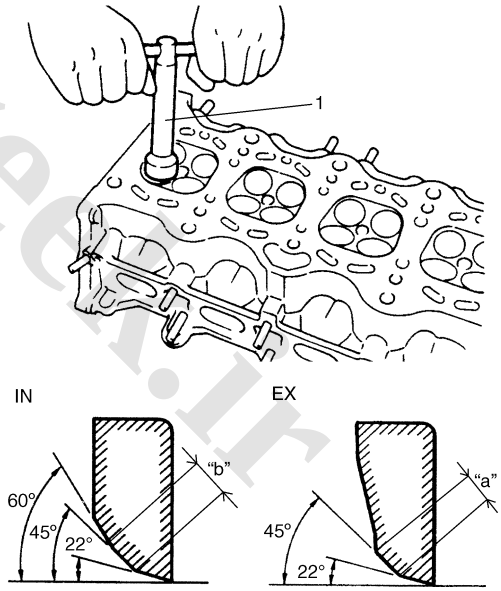


I3RM0A140036-01

www.cargeek.ir

www.CarGeek.ir

## Cylinder Head Inspection

S5JB0A1416027

- Remove all carbon deposits from combustion chambers.

**NOTE**

**Do not use any sharp-edged tool to scrape off carbon deposits. Be careful not to scuff or nick metal surfaces when decarbonizing. The same applies to valves and valve seats, too.**

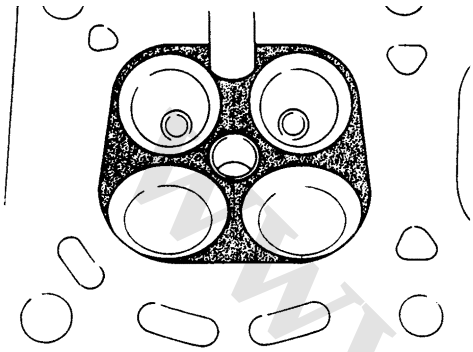

I2RH0B140105-01

- Check cylinder head for cracks on intake and exhaust ports, combustion chambers, and head surface. Using a straightedge and thickness gauge, check flatness of gasketed surface at a total of 6 locations. If distortion limit is exceeded, correct gasketed surface with a surface plate and abrasive paper of about #400 (Waterproof silicon carbide abrasive paper): place abrasive paper on and over surface plate, and rub gasketed surface against paper to grind off high spots. Should this fail to reduce thickness gauge readings to within limit, replace cylinder head.
  Leakage of combustion gases from this gasketed joint is often due to warped gasketed surface: such leakage results in reduced power output.

  **Distortion for cylinder head surface on piston side**
  **Limit: 0.03 mm (0.001 in.)**

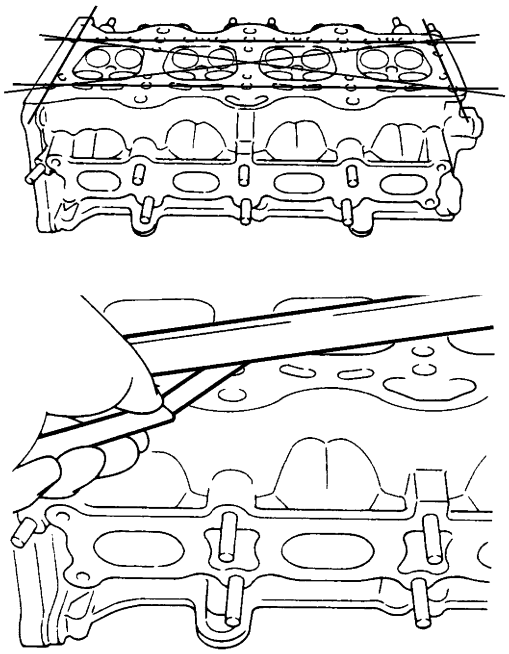

I2RH0B140106-01

- Distortion of manifold seating faces:
  Check seating faces of cylinder head for manifolds, using a straightedge and thickness gauge, in order to determine whether these faces should be corrected or cylinder head replaced.

  **Distortion for cylinder head surface on intake and exhaust manifold**
  **Limit: 0.05 mm (0.002 in.)**

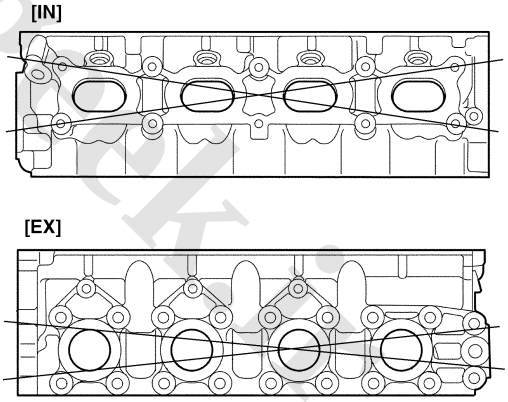


I2RH0B140107-01

www.cargeek.ir

www.CarGeek.ir


### Cylinder Head Bolt

Measure each thread diameter of cylinder head bolt (1) at “A” on 83.5 mm (2.81 in.) from seat side of flange bolt and “B” on 115 mm (4.53 in.) from seat side of flange bolt by using a micrometer (2).
Then calculate difference in diameters (“A” – “B”). If it exceeds limit, replace with new one.

**Cylinder head bolt diameter measurement points**
**“a”: 83.5 mm (2.81 in.)**
**“b”: 115 mm (4.53 in.)**

**Cylinder head bolt diameter difference (deformation)**
**Limit (“A” – “B”): 0.1 mm (0.004 in.)**

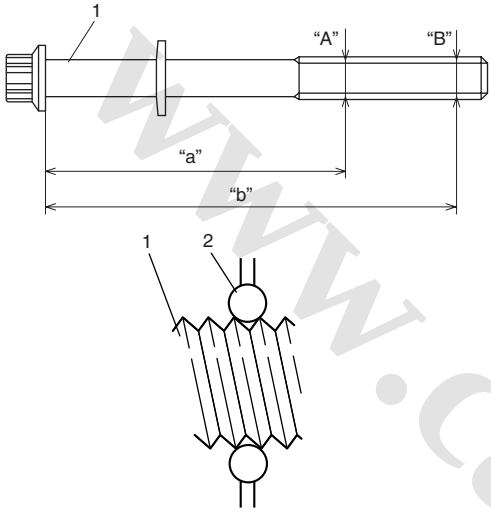

I2RH0B140092-01

## Valve Spring Inspection

S5JB0A1416028

### Valve Spring Free Length and Preload

Referring to data, check to be sure that each spring is in sound condition, free of any evidence of breakage or weakening. Remember, weakened valve springs can cause chatter, not to mention possibility of reducing power output due to gas leakage caused by decreased seating pressure.

**Valve spring free length**
**Standard: 36.83 mm (1.450 in.)**
**Limit: 35.83 mm (1.411 in.)**

**Valve spring preload**
**Standard: 107 – 125 N (10.7 – 12.5 kg) for 31.50 mm (23.6 – 27.6 lb/1.240 in.)**
**Limit: 102 N (10.2 kg) for 31.50 mm (22.5 lb/1.240 in.)**

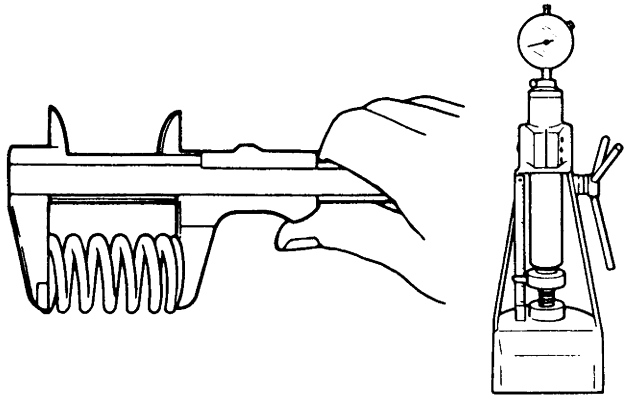
I2RH01140143-01

### Spring Squareness

Use a square and surface plate to check each spring for squareness in terms of clearance between end of valve spring and square. Valve springs found to exhibit a larger clearance than limit must be replaced.

**Valve spring squareness**
**Limit: 1.6 mm (0.063 in.)**

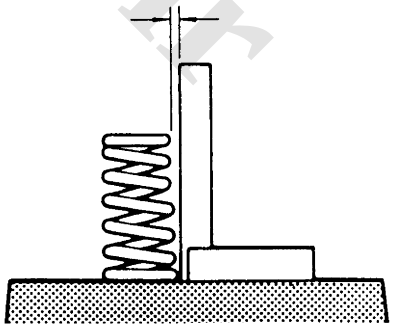
I2RH01140144-01

www.cargeek.ir

www.CarGeek.ir

## Pistons, Piston Rings, Connecting Rods and Cylinders Components

S5JB0A1416029

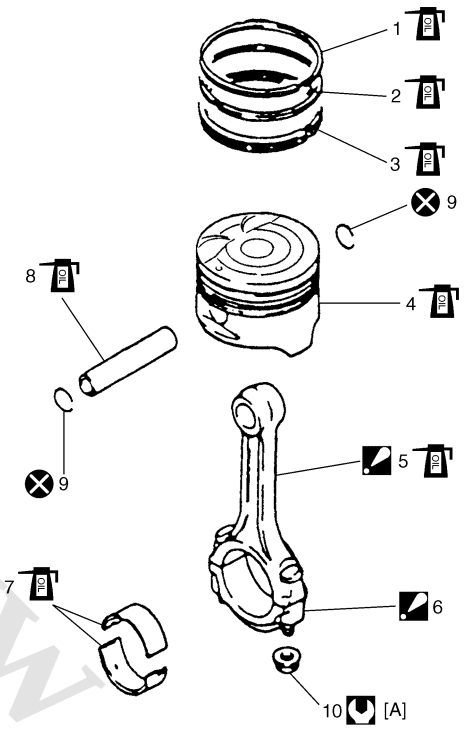


I2RH0B140108-01

| | |
|---|---|
| [A]: 1) Tighten all nuts to 15 N·m (1.5 kgf-m).<br>2) Then retighten all nuts by turning through 45°.<br>3) Repeat Step 2) again. | 7. Connecting rod bearing |
| 1. Top ring | 8. Piston pin |
| 2. 2nd ring | 9. Piston pin circlip |
| 3. Oil ring | 10. Bearing cap nut |
| 4. Piston | : Tightening torque |
| 5. Connecting rod<br>: See “A” | : Apply engine oil to sliding surface of each part. |
| 6. Connecting rod bearing cap<br>: See “B” | : Do not reuse. |
| “A”: Apply engine oil to sliding surface except inner surface of big end, and rod bolts.<br>Check rod bolt, plastic deformation tightening bolt, for deformation referring to “Connecting rod bolt deformation (Plastic deformation tightening bolt) under “Piston Pins and Connecting Rods Inspection: For M16A Engine with VVT”, if it is reused | |
| “B”: Point arrow mark on cap to crankshaft pulley side. | |

## Pistons, Piston Rings, Connecting Rods and Cylinders Removal and Installation

S5JB0A1416030

### Removal

1) Remove engine assembly from vehicle referring to “Engine Assembly Removal and Installation: For M16A Engine with VVT”.
2) Remove cylinder head referring to “Valves and Cylinder Head Removal and Installation: For M16A Engine with VVT”.
3) Mark cylinder number on all pistons, connecting rods and connecting rod caps using silver pencil or quick drying paint.
4) Remove rod bearing caps.
5) Install guide hose (1) over threads of rod bolts.
   This prevents damage to bearing journal and rod bolt threads when removing connecting rod.

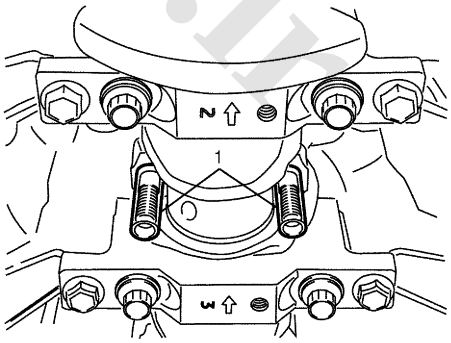


I2RH0B140109-01

6) Decarbonize top of cylinder bore before removing piston from cylinder.
7) Push piston and connecting rod assembly out through the top of cylinder bore.

www.cargeek.ir

www.CarGeek.ir


**Installation**

1) Apply engine oil to pistons, rings, cylinder walls, connecting rod bearings and crank pins.

**NOTE**

**Do not apply oil between connecting rod and bearing or between bearing cap and bearing.**

2) Install guide hoses (1) over connecting rod bolts. These guide hoses protect crank pin and threads of rod bolt from damage during installation of connecting rod and piston assembly.

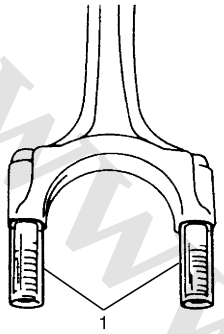


I2RH01140147-01

3) When installing piston and connecting rod assembly into cylinder bore, point front mark (1) on piston head to crankshaft pulley side.

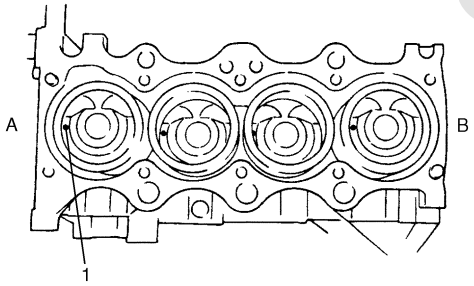


I2RH0B140110-01

| | |
|---|---|
| A: Crankshaft pulley side | B: Flywheel side |

4) Install piston and connecting rod assembly into cylinder bore. Use special tool (Piston ring compressor) to compress rings. Guide connecting rod into place on crankshaft.
Using a hammer handle, tap piston head to install piston into bore. Hold ring compressor firmly against cylinder block until all piston rings have entered cylinder bore.

**Special tool**
**(A): 09916–77310**

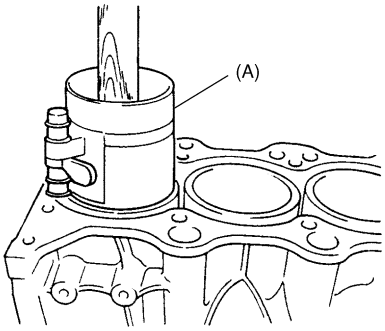


I2RH0B140111-01

5) Install bearing cap (1):
Point arrow mark (2) on cap to crankshaft pulley side.
After applying engine oil to rod bolts and tighten cap nuts (3) gradually as follows.

**NOTE**

**If connecting rod bolt is reused, make sure to check connecting rod bolt for deformation referring to "Connecting rod bolt deformation (Plastic deformation tightening bolt)" under "Piston Pins and Connecting Rods Inspection: For M16A Engine with VVT".**

a) Tighten all cap nuts to 15 N·m (1.5 kgf-m, 11.0 lb-ft).
b) Retighten them to 45°
c) Repeat Step b) once again.

**Tightening torque**
**Connecting rod bearing cap nut (a): 15 N·m (1.5 kgf-m, 11.0 lb-ft) and then retighten by turning through 45° twice**

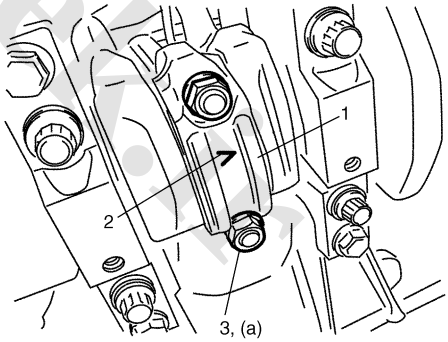


I2RH0B140112-01

6) Install cylinder head referring to "Valves and Cylinder Head Removal and Installation: For M16A Engine with VVT".

www.cargeek.ir

www.CarGeek.ir

## Pistons, Piston Rings, Connecting Rods and Cylinders Disassembly and Assembly

S5JB0A1416031

### Disassembly

1) Using piston ring expander, remove two compression rings (Top and 2nd) and oil ring from piston.
2) Remove piston pin from connecting rod as follows.
   a) Ease out piston pin circlips (1), as shown.

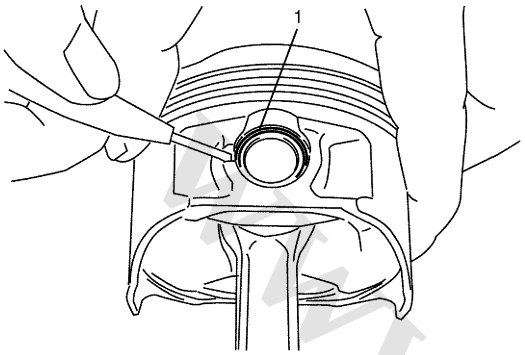


I2RH0B140113-01

   b) Force piston pin out.

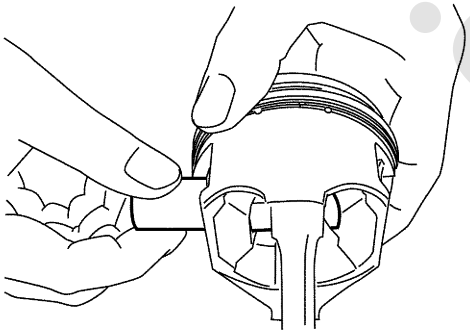

I2RH0B140114-01

### Assembly

1) Decarbonize piston head and ring grooves using a suitable tool.
2) Install piston pin to piston (1) and connecting rod (2):
   a) After applying engine oil to piston pin and piston pin holes in piston and connecting rod.
   b) Fit connecting rod as shown in the figure.
   c) Insert piston pin to piston and connecting rod.
   d) Install piston pin circlips (3).

**NOTE**

**Circlip should be installed with its cut part facing as shown in the figure. Install so that circlip end gap comes within such range as indicated by arrow.**

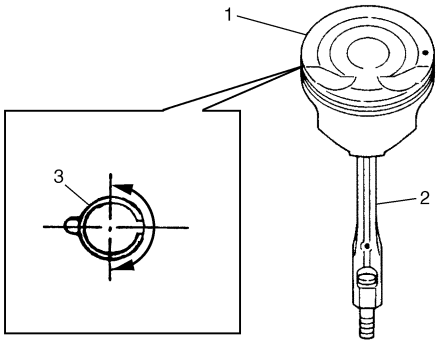


I2RH0B140115-01

3) Install piston rings to piston:
   - As indicated in the figure, 1st and 2nd rings have “T” mark (4) respectively. When installing these piston rings to piston, direct marked side of each ring toward top of piston.
   - 1st ring (1) differs from 2nd ring (2) in thickness, shape and color of surface contacting cylinder wall.
     Distinguish 1st ring from 2nd ring by referring to the figure.
   - When installing oil ring (3), install spacer first and then two rails.

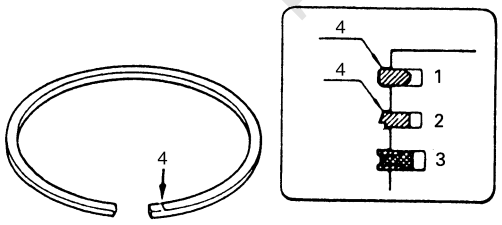


I5JB0A141025-01

www.cargeek.ir

www.CarGeek.ir


4) After installing three rings (1st, 2nd and oil rings), distribute their end gaps as shown in the figure.

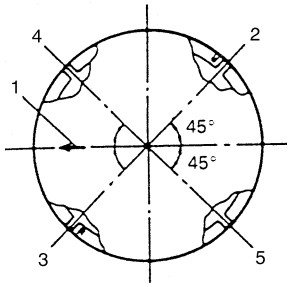


IYSQ01142102-01

| | |
|---|---|
| 1. Arrow mark | 4. Oil ring upper rail gap |
| 2. 1st ring end gap | 5. Oil ring lower rail gap |
| 3. 2nd ring end gap and oil ring spacer gap | |

## Cylinders, Pistons and Piston Rings Inspection

S5JB0A1416032

### Cylinder

**Visual inspection**

Inspect cylinder walls for scratches, roughness or ridges which indicate excessive wear. If cylinder bore is very rough or deeply scratched, or ridged, rebore cylinder and use over size piston.

**Cylinder bore diameter, taper and out-of-round**

Using a cylinder gauge (1), measure cylinder bore in thrust and axial directions at two positions (“a” and “b”) as shown in the figure.
If any of the following conditions is noted, rebore cylinder.

1) Cylinder bore dia. exceeds limit.
2) Difference of measurements at two positions exceeds taper limit.
3) Difference between thrust and axial measurements exceeds out-of-round limit.

**Cylinder bore diameter**
**Standard: 78.00 – 78.014 mm (3.0709 – 3.0714 in.)**
**Limit: 78.114 mm (3.075 in.)**

**Cylinder taper and out-of-round**
**Limit: 0.10 mm (0.004 in.)**

**NOTE**

**If any one of four cylinders has to be rebored, rebore all four to the same next oversize. This is necessary for the sake of uniformity and balance.**

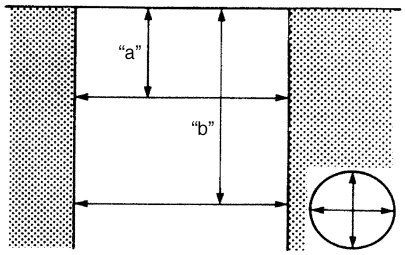


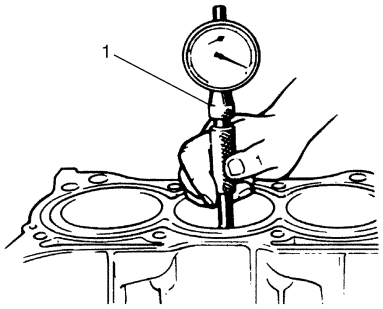


I2RH0B140117-01

| | |
|---|---|
| “a”: 50 mm (1.96 in.) | “b”: 95 mm (3.74 in.) |

### Piston

**Visual inspection**

Inspect piston for faults, cracks or other damages. Damaged or faulty piston should be replaced.

**Piston diameter**

As indicated in the figure, piston diameter should be measured at a position 19.5 mm (0.77 in.) (“a”) from piston skirt end in the direction perpendicular to piston pin.

**Piston diameter specification**
**Standard size: 77.953 – 77.968 mm (3.0690 – 3.0696 in.)**
**Standard size (new one (with coating)): 77.969 – 77.984 mm (3.0696 – 3.0702 in.)**
**Oversize (0.50 mm (0.0196 in.)): 78.453 – 78.468 mm (3.0887 – 3.0893 in.)**

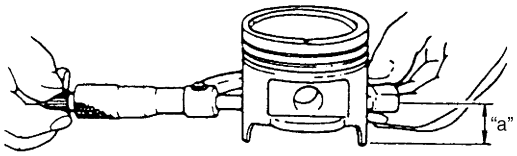


I2RH01140157-01

www.cargeek.ir

www.CarGeek.ir

**Piston clearance**
Measure cylinder bore diameter and piston diameter to find their difference which is piston clearance. Piston clearance should be within specification as follows. If it is out of specification, rebore cylinder and use oversize piston.

**NOTE**

**Cylinder bore diameters used here are measured in thrust direction at two positions.**

**Piston clearance**
**Standard: 0.032 – 0.061 mm (0.0013 – 0.0024 in.)**
**Standard (piston with coating (new one)): 0.016 – 0.045 mm (0.0006 – 0.0018 in.)**
**Limit: 0.161 mm (0.0065 in.)**

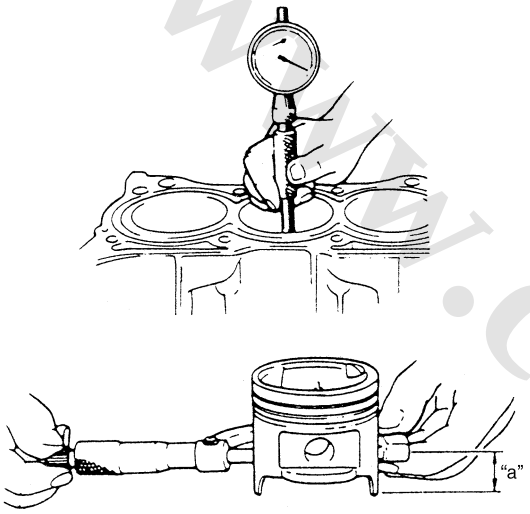


I4RS0A140022-01

"a": 19.5 mm (0.77 in.)

**Ring groove clearance**
Before checking, piston grooves must be clean, dry and free of carbon deposits.
Fit new piston ring (1) into piston groove, and measure clearance between ring and ring land by using thickness gauge (2). If clearance is out of specification, replace piston.

**Ring groove clearance**

| | Standard | Limit |
|---|---|---|
| Top ring | 0.03 – 0.07 mm (0.0012 – 0.0028 in.) | 0.12 mm (0.0047 in.) |
| 2nd ring | 0.02 – 0.06 mm (0.0008 – 0.0024 in.) | 0.10 mm (0.0039 in.) |
| Oil ring | 0.03 – 0.17 mm (0.0012 – 0.0067 in.) | — |

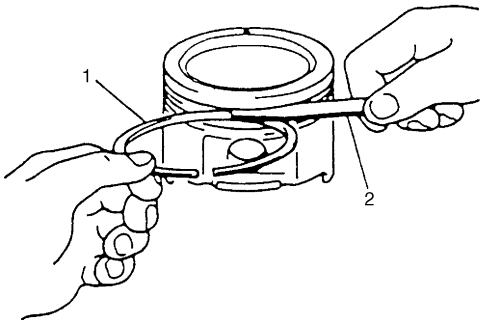


I2RH01140159-01

**Piston Ring**

**Piston ring end gap**
To measure end gap, insert piston ring (2) into cylinder bore and then measure the gap by using thickness gauge (1).
If measured gap exceeds limit, replace ring.

**NOTE**

**Decarbonize and clean top of cylinder bore before inserting piston ring.**

**Piston ring end gap**

| Item | Standard | Limit |
|---|---|---|
| Top ring | 0.20 – 0.35 mm (0.0079 – 0.0138 in.) | 0.7 mm (0.0276 in.) |
| 2nd ring | 0.35 – 0.50 mm (0.0138 – 0.0197 in.) | 1.0 mm (0.0394 in.) |
| Oil ring | 0.20 – 0.70 mm (0.0079 – 0.0276 in.) | 1.2 mm (0.0472 in.) |

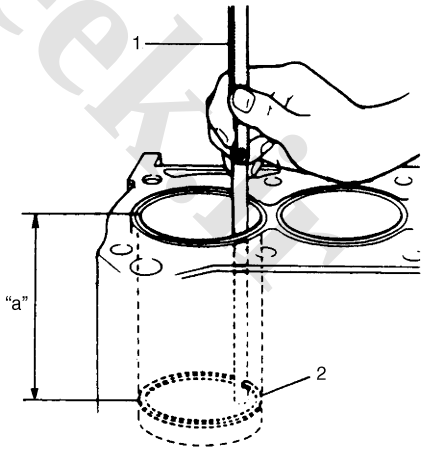


I2RH01140161-01

"a": 120 mm (4.72 in.)

www.cargeek.ir

www.CarGeek.ir


## Piston Pins and Connecting Rods Inspection

S5JB0A1416033

### Piston Pin

**Visual inspection**

Check piston pin, connecting rod small end bore and piston bore for wear or damage, paying particular attention to condition of small end bore bush. If pin, connecting rod small end bore or piston bore is badly worn or damaged, replace pin, connecting rod and/or piston.

**Piston pin clearance**

Check piston pin clearance in small end and piston. Replace connecting rod and/or piston if its small end is badly worn or damaged or if measured clearance exceeds limit.

**Piston pin clearance in connecting rod small end**
**Standard: 0.003 – 0.014 mm (0.0001 – 0.0006 in.)**
**Limit: 0.05 mm (0.00020 in.)**

**Piston pin clearance in piston**
**Standard: 0.006 – 0.017 mm (0.00024 – 0.00067 in.)**
**Limit: 0.05 mm (0.0020 in.)**

**Small-end bore**
**20.003 – 20.011 mm (0.7875 – 0.7878 in.)**

**Piston pin dia.**
**19.997 – 20.000 mm (0.7873 – 0.7874 in.)**

**Piston bore**
**20.006 – 20.014 mm (0.7876 – 0.7880 in.)**

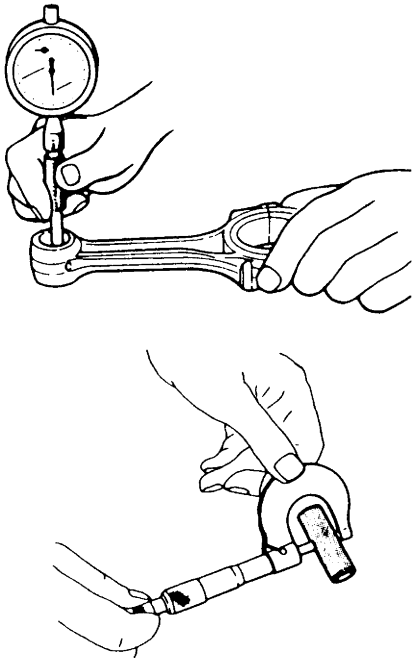

I4RS0A140023-01

### Connecting Rod

**Big-end side clearance**

Check big-end of connecting rod for side clearance, with rod fitted and connected to its crank pin in the normal manner. If measured clearance is found to exceed its limit, replace connecting rod.

**Big-end side clearance**
**Standard: 0.25 – 0.40 mm (0.0098 – 0.0157 in.)**
**Limit: 0.55 mm (0.0217 in.)**

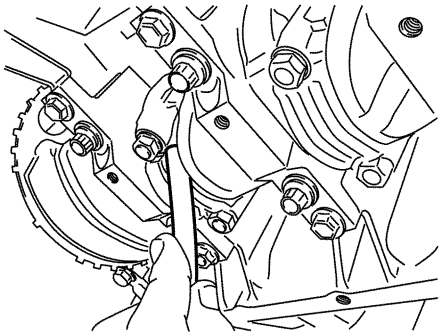

I2RH0B140148-01

**Connecting rod alignment**

Mount connecting rod on aligner to check it for bow and twist. If measured value exceeds the limit, replace it.

**Connecting rod alignment**
**Limit on bow: 0.05 mm (0.0020 in.)**
**Limit on twist: 0.10 mm (0.0039 in.)**

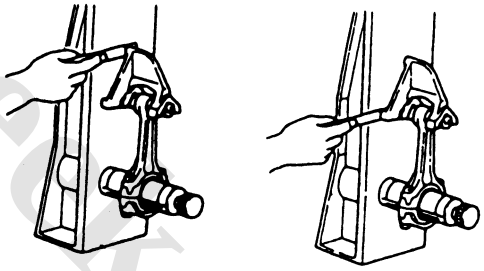

I4RH01140053-01

www.cargeek.ir

www.CarGeek.ir

**Connecting rod bolt deformation (Plastic deformation tightening bolt)**

Measure each thread diameter of connecting rod bolt (2) at “A” on 32 mm (1.25 in.) from bolt mounting surface and “B” on 40 mm (1.57 in.) from bolt mounting surface by using a micrometer (3).
Calculate difference in diameters (“A” – “B”). If it is exceeds limit, replace connected rod (1).

**Connecting rod bolt measurement points**
**“a”: 32 mm (1.25 in.)**
**“b”: 40 mm (1.57 in.)**

**Connecting rod bolt diameter difference**
**Limit (“A” – “B”): 0.1 mm (0.004 in.)**

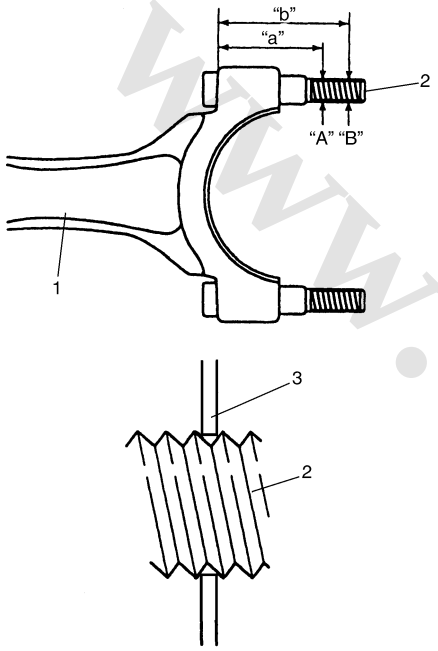


I2RH0B140119-01

## Crank Pin and Connecting Rod Bearings Inspection

S5JB0A1416034

**Crank Pin Diameter**

Inspect crank pin for uneven wear or damage. Measure crank pin for out-of-round or taper with a micrometer. If crank pin is damaged or out-of round or taper is out of limit, replace crankshaft or regrind crank pin to undersize and use undersize bearing.

**Crank pin diameter**

| Connecting rod bearing size | Crank pin diameter |
|---|---|
| Standard | 41.982 – 42.000 mm (1.6528 – 1.6535 in.) |
| 0.25 mm (0.0098 in.) undersize | 41.732 – 41.750 mm (1.6430 – 1.6437 in.) |

**Out-of-round**
**A – B**

**Taper**
**a – b**

**Crank pin taper and out-of-round**
**Limit: 0.01 mm (0.0004 in.)**

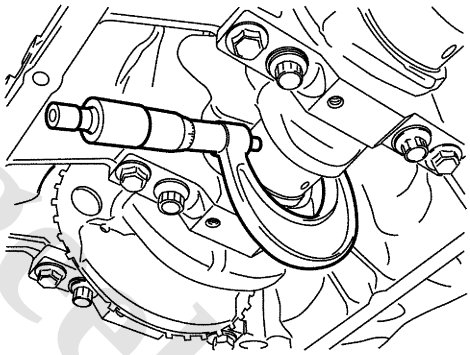

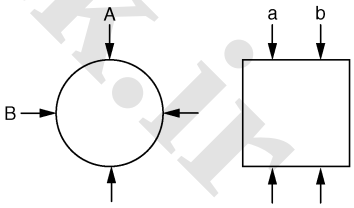


I2RH0B140120-01

www.cargeek.ir

www.CarGeek.ir


**Connecting Rod Bearing General Information**
Service connecting rod bearings are available in standard size and 0.25 mm (0.0098 in.) undersize bearing, and standard size bearing has 5 kinds of bearings differing in tolerance.
For identification of undersize bearing, it is painted red at the position as indicated in the figure, undersize bearing thickness is 1.605 – 1.615 mm (0.0632 – 0.0635 in.) at the center of it.

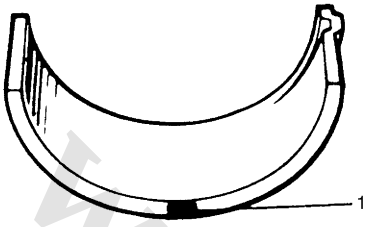


I2RH01140164-01

1. Red paint

**Connecting Rod Bearing Visual Inspection**
Inspect bearing shells for signs of fusion, pitting, burn or flaking and observe contact pattern. Bearing shells found in defective condition must be replaced.

**Connecting Rod Bearing Clearance**

1) Before checking bearing clearance, clean bearing and crank pin.
2) Install bearing in connecting rod and bearing cap.
3) Place a piece of gauging plastic (1) to full width of crank pin as contacted by bearing (parallel to crankshaft), avoiding oil hole.

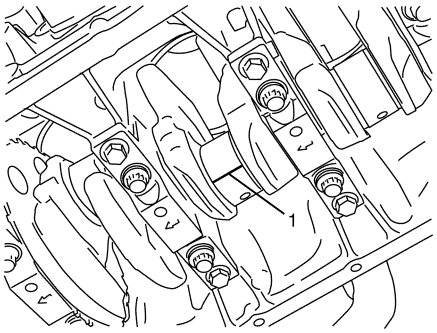


I2RH0B140121-01

4) Install rod bearing cap (1) to connecting rod.
When installing cap, be sure to point arrow mark (2) on cap to crankshaft pulley side, as shown in the figure. After applying engine oil to rod bolts, tighten cap nuts (3) gradually as follows.
   a) Tighten all cap nuts to 15 N·m (1.5 kgf-m, 11.0 lb-ft)
   b) Retighten them to 45°
   c) Repeat Step b) once again.

   **Tightening torque**
   **Connecting rod bearing cap nut (a): 15 N·m (1.5 kgf-m, 11.0 lb-ft) and then retighten by turning through 45° twice**

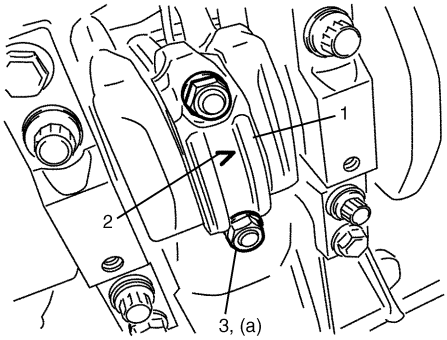


I2RH0B140122-01

5) Remove cap and using a scale (1) on gauging plastic envelope (2), measure gauging plastic (2) width at the widest point (clearance).
If clearance exceed its limit, use a new standard size bearing referring to “Selection of Connecting Rod Bearings: For M16A Engine with VVT”.
After selecting new bearing, recheck clearance.

   **<u>Connecting rod bearing clearance</u>**
   **Standard: 0.029 – 0.047 mm (0.0011 – 0.0018 in.)**
   **Limit: 0.065 mm (0.0026 in.)**

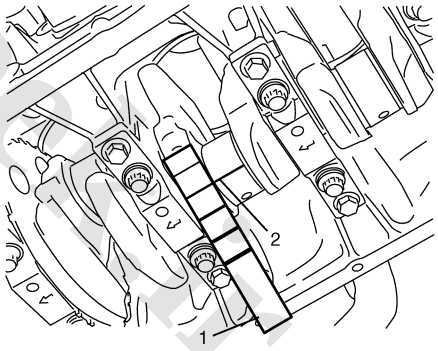


I2RH0B140123-01

6) If clearance can not be brought to its limit even by using a new standard size bearing, use next thicker bearing and recheck clearance or regrind crank pin to undersize and use 0.25 mm undersize bearing.

www.cargeek.ir

www.CarGeek.ir

### Selection of Connecting Rod Bearings

**NOTE**

- **If bearing is in malcondition, or bearing clearance is out of specification, select a new standard bearing according to the following procedure and install it.**
- **When replacing crankshaft or connecting rod and its bearing due to any reason, select new standard bearings to be installed by referring to numbers stamped on connecting rod and its cap and/or alphabets stamped on crank web of No.3 cylinder.**

1) Check stamped numbers on connecting rod and its cap as shown.
   Three kinds of numbers (“1”, “2” and “3”) represent the following connecting rod big end inside diameters.
   For example, stamped number “1” indicates that corresponding connecting rod big end inside diameter is 45.000 – 45.006 mm (1.7717 – 1.7718 in.).

**Connecting rod big end inside diameter**

| Stamped numbers | Connecting rod big end inside diameter |
|---|---|
| 1 | 45.0000 – 45.0060 mm (1.7717 – 1.7718 in.) |
| 2 | 45.0061 – 45.0120 mm (1.7719 – 1.7721 in.) |
| 3 | 45.0121 – 45.0180 mm (1.7722 – 1.7723 in.) |

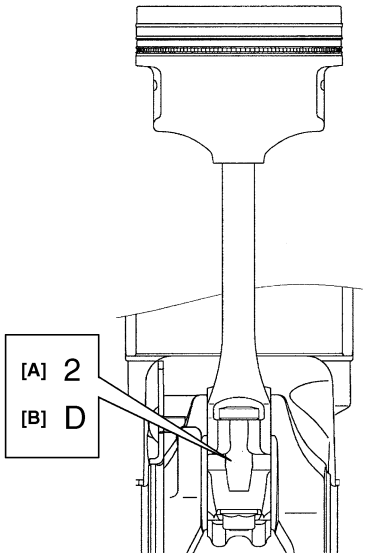


I3RH0A140017-01

| | |
|---|---|
| [A]: | Connecting rod big end inside diameter number |
| [B]: | Weight indication mark |

2) Next, check crankshaft pin diameter. On crank web No.3, four alphabets are stamped as shown in the figure.
   Three kinds of alphabet (“A”, “B” and “C”) represent the following crankshaft pin diameter respectively.
   For example, stamped “A” indicates that corresponding crankshaft pin diameter is 41.994 – 42.000 mm (1.6533 – 1.6534 in.).

**Crankshaft pin outer diameter**

| Stamped alphabet | Crankshaft pin diameter |
|---|---|
| A | 41.9940 – 42.0000 mm (1.6533 – 1.6534 in.) |
| B | 41.9880 – 41.9939 mm (1.6531 – 1.6532 in.) |
| C | 41.9820 – 41.9879 mm (1.6529 – 1.6530 in.) |

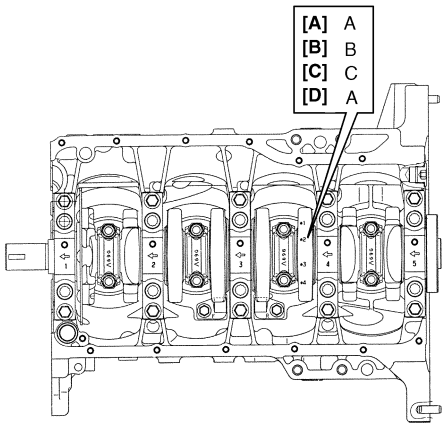


I3RH0A140018-01

| | |
|---|---|
| [A]: | Crankshaft pin diameter for No.1 cylinder |
| [B]: | Crankshaft pin diameter for No.2 cylinder |
| [C]: | Crankshaft pin diameter for No.3 cylinder |
| [D]: | Crankshaft pin diameter for No.4 cylinder |

www.cargeek.ir

www.CarGeek.ir


3) There are five kinds of standard bearings differing in thickness. To distinguish them, they are painted in the following colors at the position as indicated in the figure.
Each color indicated the following thickness at the center of bearing.

**Standard size of connecting rod bearing thickness**

| Color painted | Bearing thickness |
|---|---|
| Blue | 1.4991 – 1.5020 mm (0.05902 – 0.05913 in.) |
| Yellow | 1.4961 – 1.4990 mm (0.05890 – 0.05901 in.) |
| Nothing | 1.4931 – 1.4960 mm (0.05878 – 0.05889 in.) |
| Black | 1.4901 – 1.4930 mm (0.05867 – 0.05877 in.) |
| Green | 1.4870 – 1.4900 mm (0.05855 – 0.05866 in.) |

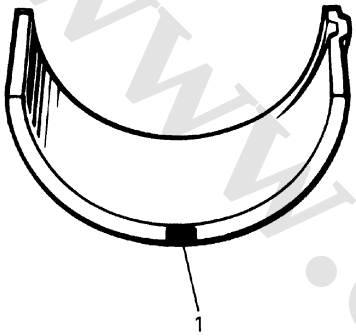


I3RH0A140019-01

1. Paint

4) From number stamped on connecting rod and its cap and alphabets stamped on crank web No.3, determine new standard bearing to be installed to connecting rod big end inside, by referring to the table.
For example, if number stamped on connecting rod and its cap is “1” and alphabet stamped on crank web No.3 is “B”, install a new standard bearing painted in “Black” to its connecting rod big end inside.

**Specification of new standard connecting rod bearing size**

| | | Number stamped on connecting rod and its cap (connecting rod big end inside diameter) | | |
|---|---|---|---|---|
| | | 1 | 2 | 3 |
| Alphabet stamped on crank web No.3 (Crankshaft pin diameter) | A | Green | Black | Nothing |
| | B | Black | Nothing | Yellow |
| | C | Nothing | Yellow | Blue |
| | | New standard bearing to be installed. | | |

www.cargeek.ir

www.CarGeek.ir

## Main Bearings, Crankshaft and Cylinder Block Components

S5JB0A1416035

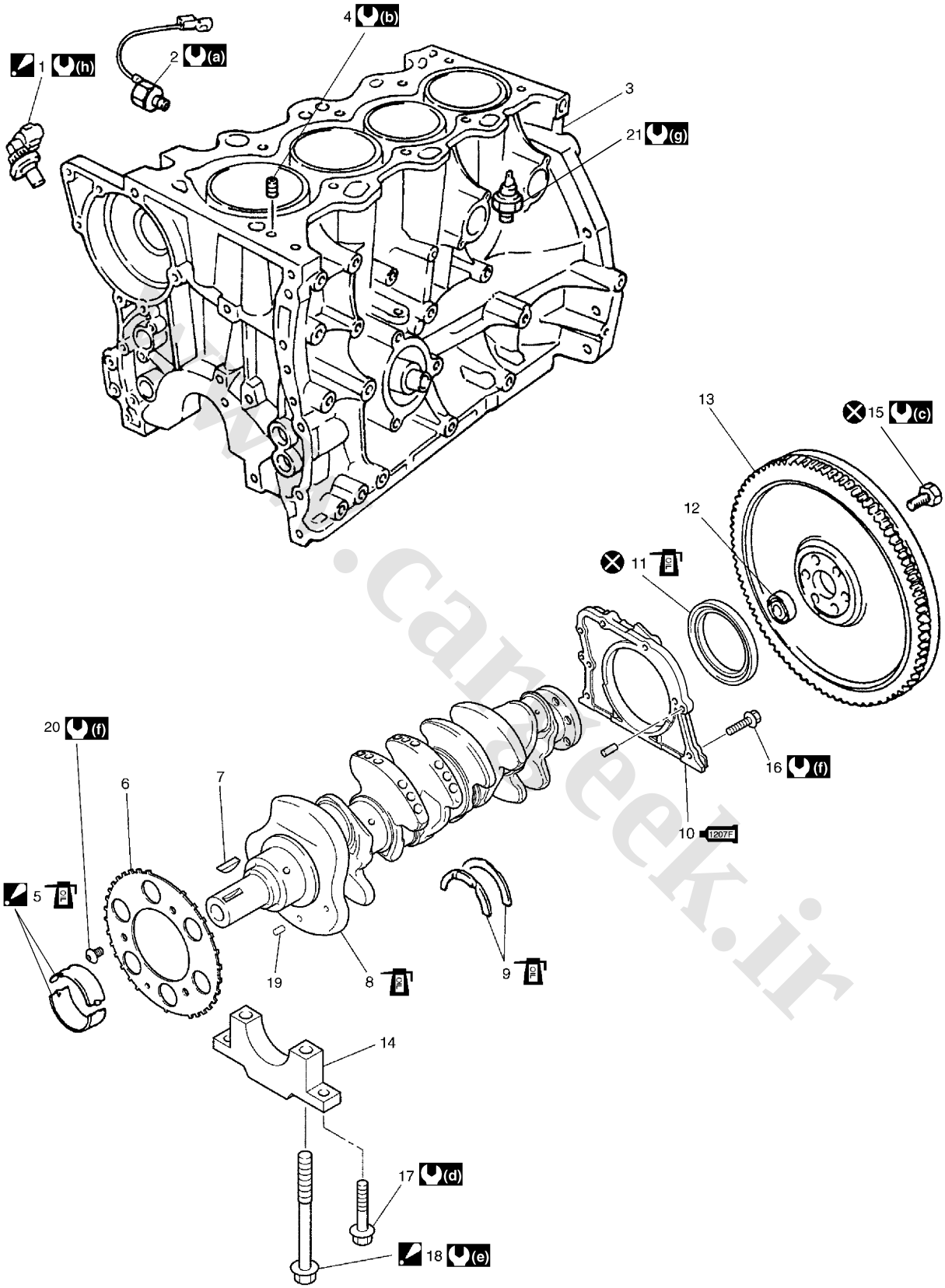


I5JB0A141026-02

www.cargeek.ir

www.CarGeek.ir


| | | |
|---|---|---|
| 1. CKP sensor (if equipped) : See “A” | 1207F 10. Rear oil seal housing : See “C” | 19. Spring pin |
| 2. Knock sensor | 11. Rear oil seal | 20. Sensor plate bolt |
| 3. Cylinder block | 12. Input shaft bearing | 21. Oil pressure switch |
| 4. Venturi plug | 13. Flywheel | (a) : 22 N·m (2.2 kgf-m, 16.0 lb-ft) |
| 5. Main bearing : See “B” | 14. Main bearing cap | (b) : 5 N·m (0.5 kgf-m, 4.0 lb-ft) |
| 6. Sensor plate | 15. Flywheel mounting bolt | (c) : 70 N·m (7.0 kgf-m, 51.0 lb-ft) |
| 7. Crankshaft timing sprocket key | 16. Rear oil seal housing mounting bolt | (d) : Tighten 25 N·m (2.5 kgf-m, 18.0 lb-ft) by the specified procedure. |
| 8. Crankshaft | 17. Main bearing cap No.2 bolt | (e) : Tighten 30 N·m (3.0 kgf-m, 22.0 lb-ft), 50 N·m (5.0 kgf-m, 36.5 lb-ft) and 60° by the specified procedure. |
| 9. Thrust bearing | 18. Main bearing cap No.1 bolt : See “D” | (f) : 11 N·m (1.1 kgf-m, 8.0 lb-ft) |
| “A”: When installing CKP sensor, use new sensor mounting bolt. | | (g) : 13 N·m (1.3 kgf-m, 9.5 lb-ft) |
| “B”: Upper half of bearing has an oil groove. | | (h) : 10 N·m (1.0 kgf-m, 7.5 lb-ft) |
| “C”: Apply sealant 99000-31250 to mating surface. | | : Do not reuse. |
| “D”: Check main bearing cap No.1 bolt, plastic deformation tightening bolt, for deformation referring to “Main Bearing Cap No.1 Bolt” under “Main Bearings Inspection: For M16A Engine with VVT”, if it is reused. | | OIL : Apply engine oil to inside / sliding surface. |

## Main Bearings, Crankshaft and Cylinder Block Removal and Installation

S5JB0A1416036

### Removal

1) Remove engine assembly from vehicle referring to “Engine Assembly Removal and Installation: For M16A Engine with VVT”.
2) Remove clutch cover, clutch disc and flywheel by using special tool.

**Special tool**
**(A): 09924–17810**

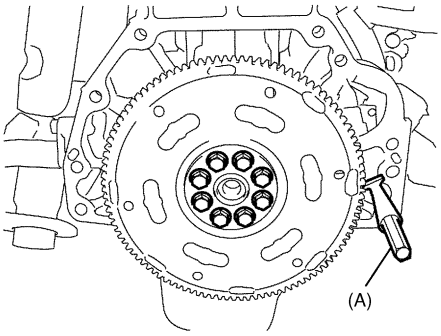


I2RH0B140125-01

3) Remove piston and connecting rod referring to “Pistons, Piston Rings, Connecting Rods and Cylinders Removal and Installation: For M16A Engine with VVT”.
4) Remove rear oil seal housing (1).

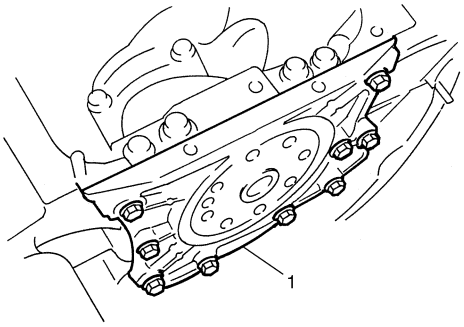


I2RH0B140126-01

5) Loosen main bearing cap No.1 and No.2 bolts in such order as indicated in the figure and remove them.

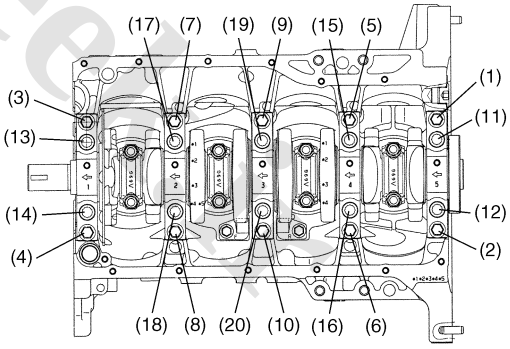


I2RH0B140127-01

6) Remove crankshaft from cylinder block.

www.cargeek.ir

www.CarGeek.ir

## Installation

**NOTE**

- **All parts to be installed must be perfectly clean.**
- **Be sure to oil crankshaft journals, journal bearings, thrust bearings, crankpins, connecting rod bearings, pistons, piston rings and cylinder bores.**
- **Journal bearings, bearing caps, connecting rods, rod bearings, rod bearing caps, pistons and piston rings are in combination sets. Do not disturb such combination and make sure that each part goes back to where it came from, when installing.**

1) Install sensor plate (1) to crankshaft (2) and tighten bolts to specified torque.

**NOTE**

**When installing sensor plate, align spring pin (3) on crankshaft and hole of sensor plate.**

**Tightening torque**
**Sensor plate bolt (a): 11 N·m (1.1 kgf-m, 8.0 lb-ft)**

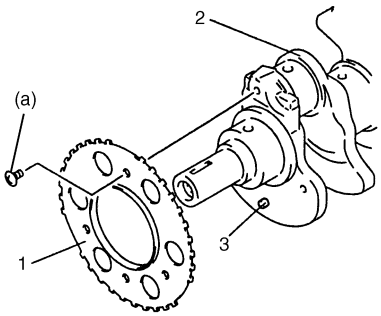


I2RH0B140128-01

2) Install main bearings to cylinder block.
Upper half of bearing (1), has an oil groove (2). Install it to cylinder block (3), and the other half without oil groove to bearing cap.
Make sure that two halves are painted in the same color.

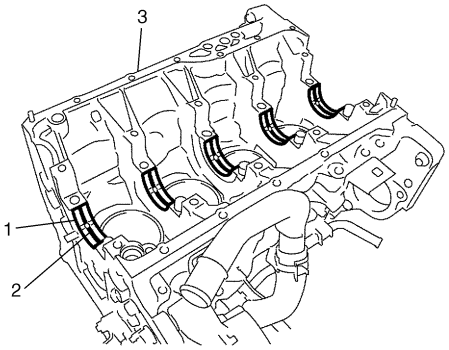


I2RH0B140129-01

3) Install thrust bearings (1) to cylinder block between No.2 and No.3 cylinders. Face oil groove (2) sides to crank webs.
4) Confirm that dowel pins (3) are installed to intake side of each journal.

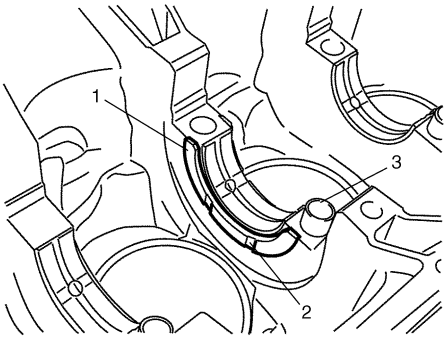


I2RH0B140130-01

5) Install crankshaft to cylinder block.
6) Install bearing cap to cylinder block, making sure to point arrow mark (on each cap) to crankshaft pulley side. Fit them sequentially in ascending order, 1, 2, 3, 4 and 5, starting from pulley side.
After applying engine oil to main bearing cap No.1 bolts ((1) – (10)) and main bearing cap No.2 bolts ((11) – (20)), tighten them gradually as follows.

**NOTE**

**If main bearing cap No.1 bolt is reused, make sure to check main bearing cap No.1 bolt for deformation referring to "Main Bearing Cap No.1 Bolt" under "Main Bearings Inspection: For M16A Engine with VVT".**

a) Tighten bolts ((1) – (10)) to 30 N·m (3.0 kgf-m, 22.0 lb-ft) according to numerical order as shown by using a 12 corner socket wrenches.
b) In the same manner as in Step a), tighten them to 50 N·m (5.0 kgf-m, 36.5 lb-ft).
c) In the same manner as in Step a), retighten them to 60°.
d) Tighten bolts ((11) – (20)) to 25 N·m (2.5 kgf-m, 18.0 lb-ft) according to numerical order as shown.

**Tightening torque**
**Main bearing cap No.1 bolt ((1) – (10)): 30 N·m (3.0 kgf-m, 22.0 lb-ft), 50 N·m (5.0 kgf-m, 36.5 lb-ft) and then retighten by turning through 60°**
**Main bearing cap No.2 bolt ((11) – (20)): 25 N·m (2.5 kgf-m, 18.0 lb-ft)**

**⚠ CAUTION**

**After tightening cap bolts, check to be sure that crankshaft rotates smoothly when turning it by 12 N·m (1.2 kgf-m, 9.0 lb-ft) torque or below.**

www.cargeek.ir

www.CarGeek.ir


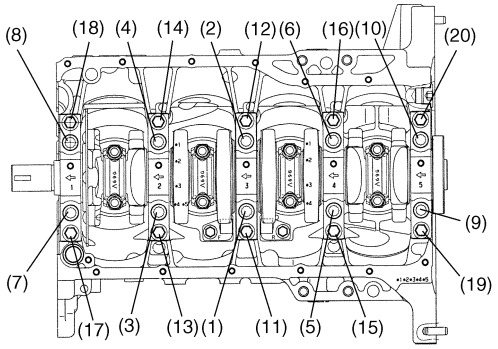


I2RH0B140131-01

7) If necessary, press-fit rear oil seal (1) to oil seal housing (2) by using special tool as shown in the figure.

**Special tool**
**(A): 09911–97821**

**Crank rear oil seal installing position (dimension)**
**"a": 2 mm (0.08 in.)**

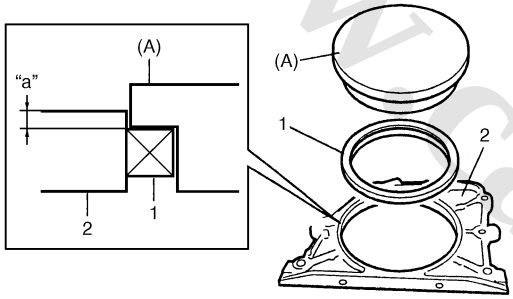


I5JB0A141028-01

8) Apply sealant to mating surface of rear oil seal housing (1).

**"A": Water tight sealant 99000–31250 (SUZUKI Bond No.1207F)**

**Sealant amount for rear oil seal housing**
**Width: "a": 3 mm (0.12 in.)**
**Height "b": 2 mm (0.08 in.)**

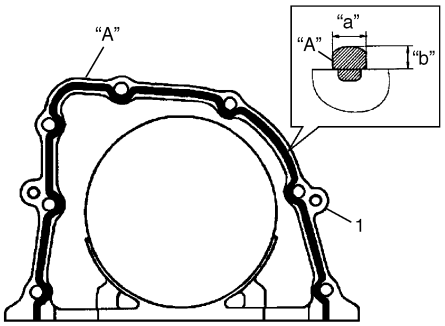


I4RS0A140018-01

9) Install rear oil seal housing (1) and tighten bolts to specified torque by using special tool.

**Special tool**
**(A): 09911–97720**

**Tightening torque**
**Rear oil seal housing bolt: 11 N·m (1.1 kgf-m, 8.0 lb-ft)**

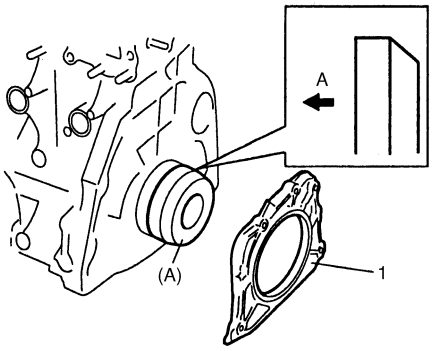


I4RS0A140019-01

A: Crankshaft side

10) Install flywheel (for M/T).
Using special tool, lock flywheel, and tighten flywheel bolts to specified torque.

**NOTE**

**Use new flywheel bolts.**

**Special tool**
**(A): 09924–17810**

**Tightening torque**
**Flywheel bolt (a): 70 N·m (7.0 kgf-m, 51.0 lb-ft)**

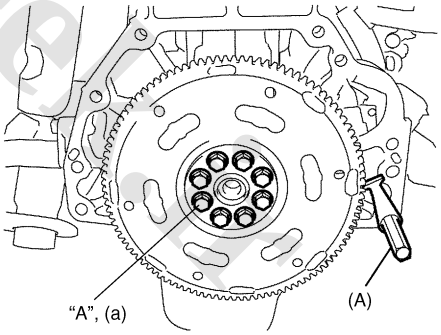


I2RH0B140134-01

11) Install piston and connecting rod referring to "Pistons, Piston Rings, Connecting Rods and Cylinders Removal and Installation: For M16A Engine with VVT".

12) Install engine assembly to vehicle referring to "Engine Assembly Removal and Installation: For M16A Engine with VVT".

www.cargeek.ir

www.CarGeek.ir

## Crankshaft Inspection

S5JB0A1416037

### Crankshaft Runout

Using a dial gauge, measure runout at center journal. Rotate crankshaft slowly. If runout exceeds its limit, replace crankshaft.

**Crankshaft runout**
**Limit: 0.02 mm (0.0008 in.)**

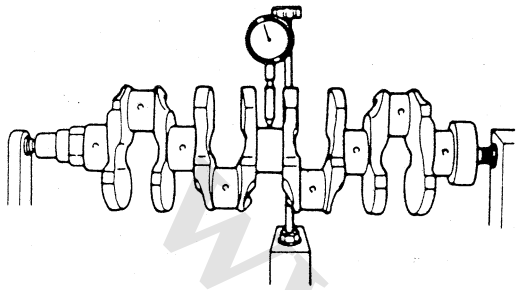

I2RH0B140135-01

### Crankshaft Thrust Play

1) Measure this play with crankshaft set in cylinder block in the normal manner, that is with thrust bearing (1) and journal bearing caps installed.

   **Thickness of crankshaft thrust bearing**
   **Standard: 2.500 mm (0.0984 in.)**
   **Oversize (0.125 mm (0.0049 in.)): 2.563 mm (0.1009 in.)**

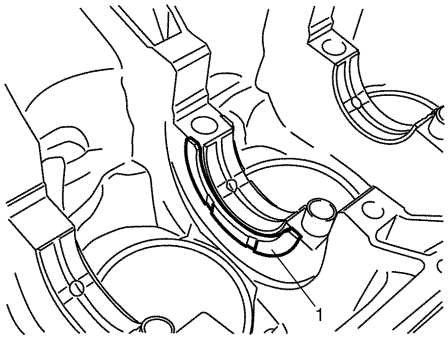


I2RH0B140136-01

2) Tighten main bearing cap No.1 bolts (1) – (10) and main bearing cap No.2 bolts (11) – (20) gradually as follows.

   **NOTE**

   **If main bearing cap No.1 bolt is reused, make sure to check main bearing cap No.1 bolt for deformation referring to "Main Bearing Cap No.1 Bolt" under "Main Bearings Inspection: For M16A Engine with VVT".**

   a) Tighten bolts (1) – (10) to 30 N·m (3.0 kgf-m, 22.0 lb-ft) according to numerical order in the figure.
   b) In the same manner as in Step a), tighten them to 50 N·m (5.0 kgf-m, 36.5 lb-ft).
   c) In the same manner as in Step a), retighten them to 60°.
   d) Tighten bolts (11) – (20) to 25 N·m (2.5 kgf-m, 18.0 lb-ft) according to numerical order in the figure.

   **Tightening torque**
   **Main bearing cap No.1 bolt ((1) – (10)): 30 N·m (3.0 kgf-m, 22.0 lb-ft), 50 N·m (5.0 kgf-m, 36.5 lb-ft) and then retighten by turning through 60°**
   **Main bearing cap No.2 bolt ((11) – (20)): 25 N·m (2.5 kgf-m, 18.0 lb-ft)**

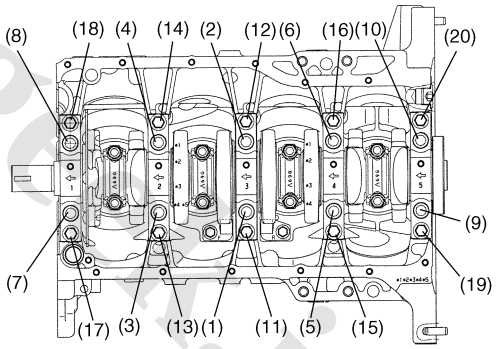


I2RH0B140137-01

3) Use a dial gauge to read displacement in axial (thrust) direction of crankshaft.
   If its limit is exceeded, replace thrust bearing with new standard one or oversize one to obtain standard thrust play.

   **Crankshaft thrust play**
   **Standard: 0.11 – 0.31 mm (0.0043 – 0.0122 in.)**
   **Limit: 0.35 mm (0.0138 in.)**

www.cargeek.ir

www.CarGeek.ir


**NOTE**

**After checking the thrust play, make sure that thread deformation of each bearing cap No.1 bolt referring to "Main Bearing Cap No.1 Bolt" in "Main Bearings Inspection: For M16A Engine with VVT".**

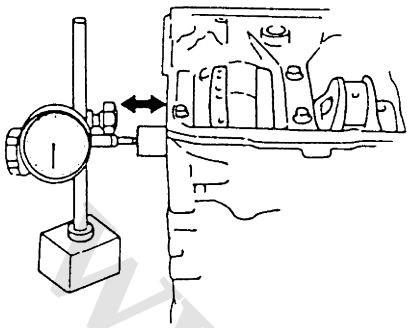

I2RH01140183-01

**Out-of-Round and Taper (Uneven Wear) of Journals**
An unevenly worn crankshaft journal shows up as a difference in diameter at a cross section or along its length (or both). This difference, if any, is determined by taking micrometer readings. If any one of journals is badly damaged or if amount of uneven wear in the sense exceeds its limit, regrind or replace crankshaft.

**Crankshaft out-of-round and taper**
**Limit: 0.01 mm (0.0004 in.)**

**Out-of-round**
**A – B**

**Taper**
**a – b**

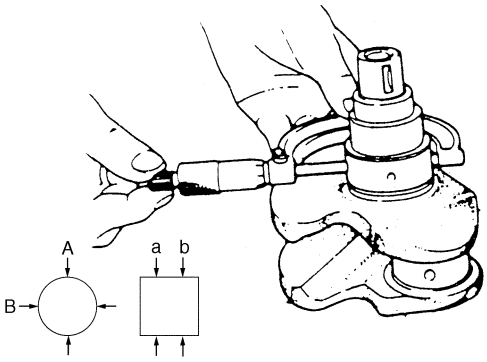


I2RH0B140138-01

## Main Bearings Inspection

S5JB0A1416038

### General Information

- Service main bearings are available in standard size and 0.25 mm (0.0098 in.) undersize, and each of them has 5 kinds of bearings differing in tolerance.
- Upper half of bearing (1) has oil groove (2) as shown in the figure.
  Install this half with oil groove to cylinder block.
- Lower half of bearing does not have an oil groove.

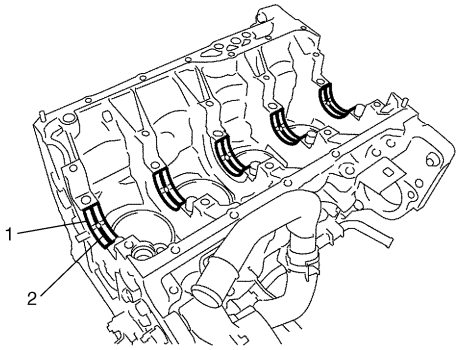


I2RH0B140139-01

### Visual Inspection

Check bearings for pitting, scratches, wear or damage. If any malcondition is found, replace both upper and lower halves. Never replace either half without replacing the other half.

### Main Bearing Clearance

**NOTE**

**Do not rotate crankshaft while gauging plastic is installed.**

Check clearance by using gauging plastic according to the following procedure.

1) Remove bearing caps.
2) Clean bearings and main journals.
3) Place a piece of gauging plastic (1) the full width of bearing (parallel to crankshaft) on journal, avoiding oil hole.

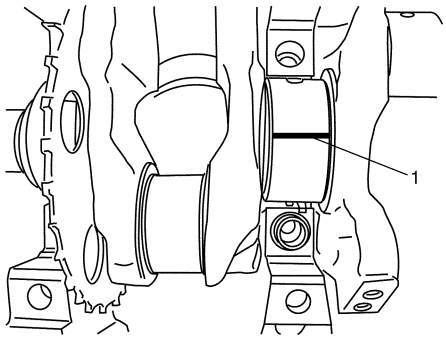


I2RH0B140140-01

www.cargeek.ir

www.CarGeek.ir

4) Tighten main bearing cap No.1 bolts (1) – (10) and main bearing cap No.2 bolts (11) – (20) gradually as follows.

**NOTE**

**If main bearing cap No.1 bolt is reused, make sure to check main bearing cap No.1 bolt for deformation referring to "Main Bearing Cap No.1 Bolt" under "Main Bearings Inspection: For M16A Engine with VVT".**

a) Tighten bolts (1) – (10) to 30 N·m (3.0 kgf-m, 22.0 lb-ft) according to numerical order in the figure.
b) In the same manner as in Step a), tighten them to 50 N·m (5.0 kgf-m, 36.5 lb-ft).
c) In the same manner as in Step a), retighten them to 60°.
d) Tighten bolts (11) – (20) to 25 N·m (2.5 kgf-m, 18.0 lb-ft) according to numerical order in the figure.

**Tightening torque**
**Main bearing cap No.1 bolt ((1) – (10)): 30 Nm (3.0 kgf-m, 22.0 lb-ft), 50 Nm (5.0 kgf-m, 36.5 lb-ft) and then retighten by turning through 60°**
**Main bearing cap No.2 bolt ((11) – (20)): 25 N·m (2.5 kgf-m, 18.0 lb-ft)**

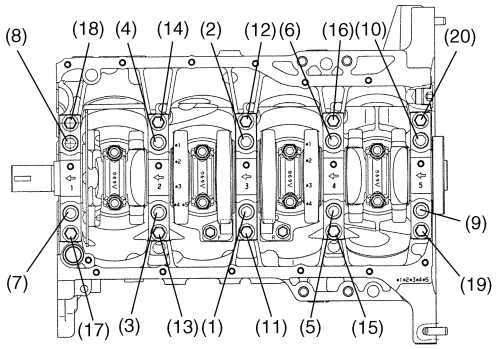

I2RH0B140137-01

5) Remove bearing caps and using scale (1) on gauging plastic envelop (2), measure gauging plastic width at its widest point. If clearance exceeds its limit, replace bearing. Always replace both upper and lower inserts as a unit.
A new standard bearing may produce proper clearance. If not, it will be necessary to regrind crankshaft journal for use of 0.25 mm undersize bearing.
After selecting new bearing, recheck clearance.

**Main bearing clearance**
**Standard: 0.021 – 0.041 mm (0.0008 – 0.0016 in.)**
**Limit: 0.054 mm (0.0021 in.)**

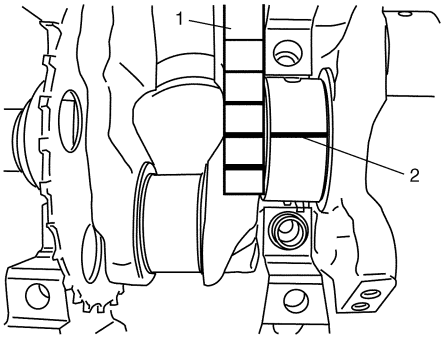

I2RH0B140141-01

**Selection of Main Bearings**

**Standard bearing**
If bearing is in malcondition, or bearing clearance is out of specification, select a new standard bearing according to the following procedure and install it.

1) First check journal diameter. As shown in the figure, crank web No.2 has stamped numbers.
Three kinds of numbers ("1", "2" and "3") represent the following journal diameters.
Stamped numbers on crank web No.2 represent journal diameters marked with an arrow in the figure respectively. For example, stamped number "1" indicates that corresponding journal diameter is 51.9940 – 52.0000 mm (2.0471 – 2.0472 in.).

**Crankshaft journal diameter**

| Stamped numbers | Journal diameter |
|---|---|
| 1 | 51.9940 – 52.0000 mm (2.0471 – 2.0472 in.) |
| 2 | 51.9880 – 51.9939 mm (2.0468 – 2.0470 in.) |
| 3 | 51.9820 – 51.9879 mm (2.0465 – 2.0467 in.) |

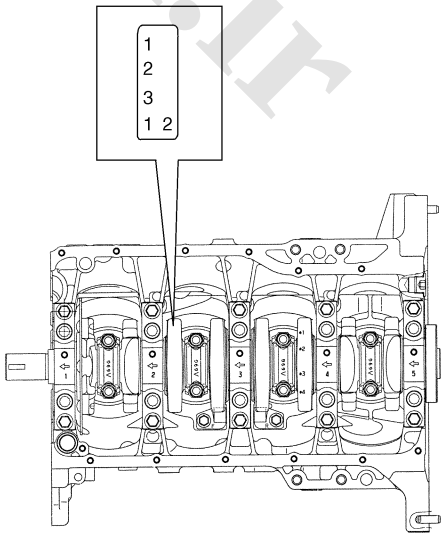

I2RH0B140142-01

www.cargeek.ir

www.CarGeek.ir


2) Next, check bearing cap bore diameter without bearing. On mating surface of cylinder block, five alphabets are stamped as shown in the figure. Three kinds of alphabets (“A”, “B” and “C”) or numbers (“1”, “2” and “3”) represent the following cap bore diameters.
Stamped alphabets or numbers on cylinder block represent bearing cap bore diameter marked with an arrow in the figure respectively.
For example, stamped “A” or “1” indicates that corresponding bearing cap bore diameter is 56.0000 – 56.0060 mm (2.2048 – 2.2049 in.).

**Crankshaft bearing cap bore**

| Stamped alphabet (number) | Bearing cap bore diameter (without bearing) |
|---|---|
| A (1) | 56.0000 – 56.0060 mm (2.2048 – 2.2049 in.) |
| B (2) | 56.0061 – 56.0120 mm (2.2050 – 2.2051 in.) |
| C (3) | 56.0121 – 56.0180 mm (2.2052 – 2.2054 in.) |

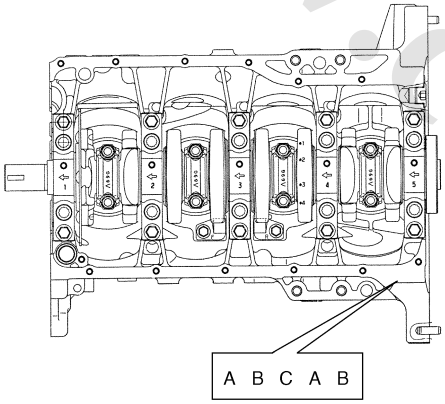


I2RH0B140143-01

3) There are 5 kinds of standard bearings differing in thickness. To distinguish them, they are painted in the following colors at the position as indicated in the figure.
Each color indicated the following thickness at the center of bearing.

**Standard size of crankshaft main bearing thickness**

| Color painted | Bearing thickness |
|---|---|
| Purple | 1.992 – 1.996 mm (0.07843 – 0.07858 in.) |
| Brown | 1.995 – 1.999 mm (0.07855 – 0.07870 in.) |
| Green | 1.998 – 2.002 mm (0.07867 – 0.07882 in.) |
| Black | 2.001 – 2.005 mm (0.07878 – 0.07893 in.) |
| Colorless (no paint) | 2.004 – 2.008 mm (0.07890 – 0.07906 in.) |

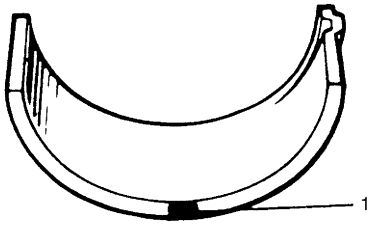


I2RH01140191-01

1. Paint

4) From number stamped on crank web No.2 and alphabets stamped on cylinder block, determine new standard bearing to be installed to journal, by referring to the table shown.
For example, if number stamped on crank web No.2 is “1” and alphabet stamped on cylinder block is “B”, install a new standard bearing painted in “Brown” to its journal.

**New standard size crankshaft main bearing specification**

| | | Number stamped on crank web No.2 (Journal diameter) | | |
|---|---|---|---|---|
| | | 1 | 2 | 3 |
| Alphabet stamped on cylinder block (Cap bore dia.) | A (1) | Purple | Brown | Green |
| | B (2) | Brown | Green | Black |
| | C (3) | Green | Black | Colorless |
| | | New standard bearing to be installed | | |

5) Using scale (1) on gauging plastic (2), check bearing clearance with newly selected standard bearing.
If clearance still exceeds its limit, use next thicker bearing and recheck clearance.

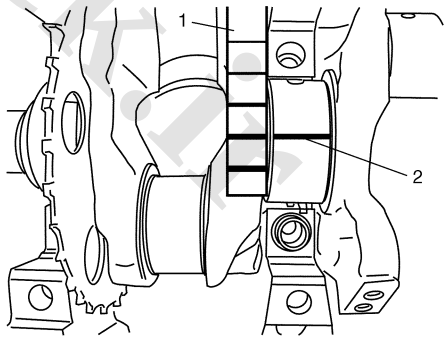


I2RH0B140141-01

6) When replacing crankshaft or cylinder block due to any reason, select new standard bearings to be installed by referring to number stamped on new crankshaft or alphabets stamped on new cylinder block.

www.cargeek.ir

www.CarGeek.ir

**Undersize bearing (0.25 mm (0.0098 in.))**

- 0.25 mm (0.0098 in.) undersize bearing is available, in five kinds varying in thickness.
  To distinguish them, each bearing is painted in the following colors at such position as indicated in the figure.
  Each color represents the following thickness at the center of bearing.

**Undersize of crankshaft main bearing thickness**

| Color painted | Bearing thickness |
|---|---|
| Red and Purple | 2.117 – 2.121 mm (0.08335 – 0.08350 in.) |
| Red and Brown | 2.120 – 2.124 mm (0.08347 – 0.08362 in.) |
| Red and Green | 2.123 – 2.127 mm (0.08359 – 0.08374 in.) |
| Red and Black | 2.126 – 2.130 mm (0.08371 – 0.08385 in.) |
| Red only | 2.129 – 2.133 mm (0.08382 – 0.08397 in.) |

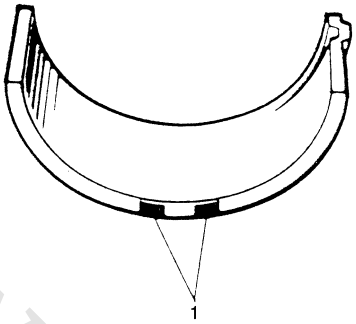


I2RH01140192-01

1. Paint

- If necessary, regrind crankshaft journal and select undersize bearing to use with it as follows.
  a. Regrind journal to the following finished diameter.

     **Finished journal diameter**
     **51.732 – 51.750 mm (2.0367 – 2.0374 in.)**

  b. Using micrometer, measure regrind journal diameter.
     Measurement should be taken in two directions perpendicular to each other in order to check for out-of-round.
  c. Using journal diameter measured above and alphabets stamped on cylinder block, select an undersize bearing by referring to the following table.
     Check bearing clearance with newly selected undersize bearing.

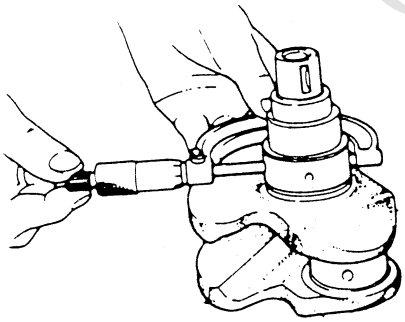

I2RH0B140144-01

www.cargeek.ir

www.CarGeek.ir


**New undersize crankshaft main bearing specification**

| | | Measured journal diameter | | |
|---|---|---|---|---|
| | | 51.7440 – 51.7500 mm (2.0372 – 2.0373 in.) | 51.7380 – 51.7439 mm (2.0370 – 2.0371 in.) | 51.7320 – 51.7379 mm (2.0367 – 2.0369 in.) |
| Alphabets stamped on cylinder block | A (1) | Red and Purple | Red and Brown | Red and Green |
| | B (2) | Red and Brown | Red and Green | Red and Black |
| | C (3) | Red and Green | Red and Black | Red only |
| | | Undersize bearing to be installed | | |

### Main Bearing Cap No.1 Bolt

Measure each thread diameter main bearing cap No.1 bolts (1) at “A” on 60 mm (2.36 in.) from seat side of flange bolt and “B” on 90 mm (3.54 in.) from seat side of flange bolt by using a micrometer (2).
Calculate difference in diameters (“A” – “B”).

**Main bearing cap No.1 bolt diameter difference**
**Limit (“A” – “B”): 0.2 mm (0.008 in.)**

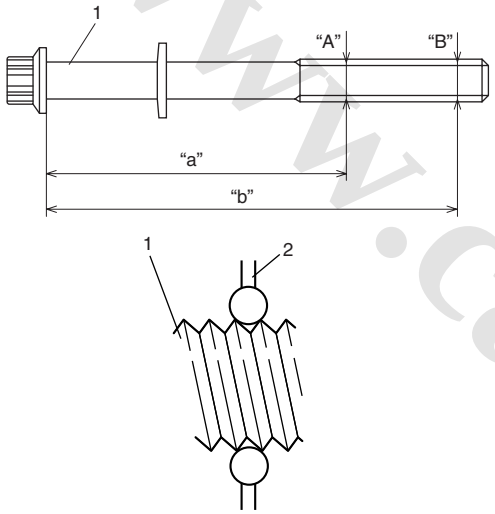


I2RH0B140145-01

### Sensor Plate Inspection

S5JB0A1416039

Check sensor plate for crack damage.
If malcondition is found, replace it.

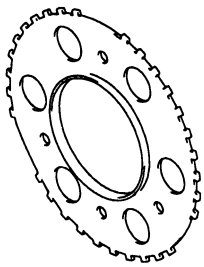

I2RH0B140151-01

### Rear Oil Seal Inspection

S5JB0A1416040

Carefully inspect oil seal (1) for wear or damage. If its lip is worn or damaged, replace it.

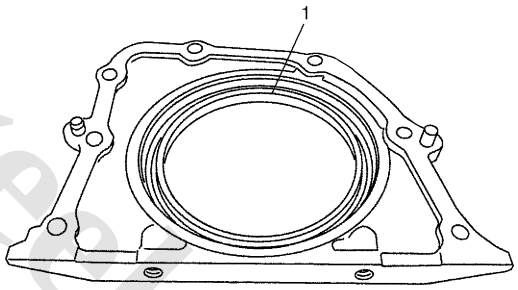


I4RS0A140020-01

www.cargeek.ir

www.CarGeek.ir

## Flywheel Inspection

S5JB0A1416041

### Visual Inspection

- If ring gear is damaged, cracked or worn, replace flywheel.
- If the surface contacting clutch disc is damaged, or excessively worn, replace flywheel.

### Flywheel Face Runout

Check flywheel face runout with a dial gauge.
If runout exceeds its limit, replace flywheel.

**Flywheel face runout**
**Limit: 0.2 mm (0.0079 in.)**

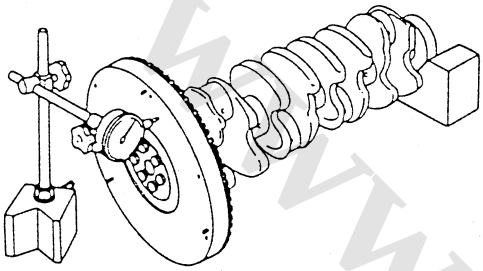

I2RH01140198-01

## Cylinder Block Inspection

S5JB0A1416042

### Distortion of Gasketed Surface

Using straightedge and thickness gauge, check gasketed surface for distortion and, if flatness exceeds its limit, correct It.

**Cylinder block flatness**
**Limit: 0.05 mm (0.0020 in.)**

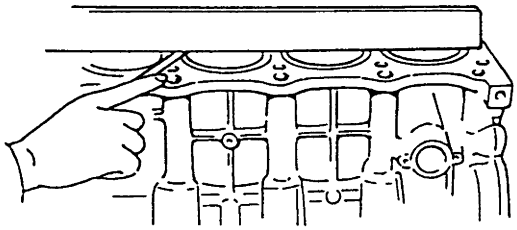

I2RH01140199-01

### Honing or Reboring Cylinders

1) When any cylinder needs reboring, all other cylinders must also be rebored at the same time.
2) Select oversized piston according to amount of cylinder wear.

   **Oversize piston specification**
   **Oversize 0.50: 78.453 – 78.468 mm (3.0887 – 3.0893 in.)**

3) Using micrometer, measure piston diameter.

   **Measurement position for piston diameter**
   **“a”: 19.5 mm (0.77 in.)**

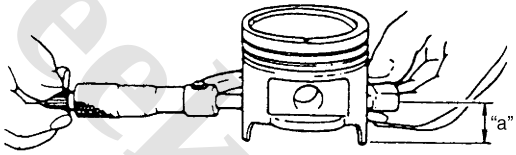


I2RH01140157-01

4) Rebore and hone cylinder to the following dimension.

   **NOTE**

   **Before reboring, install all main bearing caps in place and tighten to specification to avoid distortion of bearing bores.**

   **Cylinder bore diameter to be rebored**
   **Oversize 0.50: 78.500 – 78.514 mm (3.0906 – 3.0911 in.)**

5) Measure piston clearance after honing.

   **Piston clearance**
   **0.032 – 0.061 mm (0.0013 – 0.0024 in.)**

www.cargeek.ir

www.CarGeek.ir


# Specifications

## Tightening Torque Specifications

S5JB0A1417001

| Fastening part | Tightening torque | | | Note |
|---|---|---|---|---|
| | N·m | kgf-m | lb-ft | |
| Camshaft housing bolts | 8 N·m (0.8 kgf-m, 6.0 lb-ft) for tightening of special tool | | | ☞ |
| Camshaft housing bolt | 11 | 1.1 | 8.0 | ☞ / ☞ / ☞ |
| Cylinder head cover bolt | 8 | 0.8 | 6.0 | ☞ |
| Air intake pipe bolt | 3 | 0.3 | 2.5 | ☞ |
| Starting motor terminal nut | 11 | 1.1 | 8.0 | ☞ |
| Generator terminal nut | 7 | 0.7 | 5.0 | ☞ |
| Timing chain cover bolt and nut | 25 | 2.5 | 18.0 | ☞ |
| Oil gallery pipe No.2 and No.3 bolt | 11 | 1.1 | 8.0 | ☞ |
| Crankshaft pulley bolt | 150 | 15.0 | 108.5 | ☞ |
| Oil control valve mounting nut | 11 | 1.1 | 8.0 | ☞ |
| Oil gallery pipe No.1 bolt | 30 | 3.0 | 21.5 | ☞ |
| Timing chain No.1 guide bolt | 11 | 1.1 | 8.0 | ☞ |
| Timing chain tensioner bolt | 25 | 2.5 | 18.0 | ☞ |
| Timing chain tensioner adjuster bolt | 11 | 1.1 | 8.0 | ☞ |
| Intake cam timing sprocket bolt | 60 | 6.0 | 43.5 | ☞ |
| Venturi plug | 5 | 0.5 | 3.5 | ☞ |
| Cylinder head bolt for M8 | 25 | 2.5 | 18.0 | ☞ |
| Cylinder head bolt for M10 | 20 N·m (2.0 kgf-m, 14.5 lb-ft), 40 N·m (4.0 kgf-m, 29.0 lb-ft) and then retighten by turning through to 60° twice | | | ☞ |
| Connecting rod bearing cap nut | 15 N·m (1.5 kgf-m, 11.0 lb-ft) and then retighten by turning through 45° twice | | | ☞ / ☞ |
| Sensor plate bolt | 11 | 1.1 | 8.0 | ☞ |
| Main bearing cap No.1 bolt ((1) – (10)) | 30 N·m (3.0 kgf-m, 22.0 lb-ft), 50 N·m (5.0 kgf-m, 36.5 lb-ft) and then retighten by turning through 60° | | | ☞ / ☞ / ☞ |
| Main bearing cap No.2 bolt ((11) – (20)) | 25 | 2.5 | 18.0 | ☞ / ☞ / ☞ |
| Rear oil seal housing bolt | 11 | 1.1 | 8.0 | ☞ |
| Flywheel bolt | 70 | 7.0 | 51.0 | ☞ |

**NOTE**

**The specified tightening torque is also described in the following.**
**“Throttle Body and Intake Manifold Components: For M16A Engine with VVT”**
**“Engine Mountings Components: For M16A Engine with VVT”**
**“Timing Chain Cover Components: For M16A Engine with VVT”**
**“Timing Chain and Chain Tensioner Components: For M16A Engine with VVT”**
**“Camshaft, Tappet and Shim Components: For M16A Engine with VVT”**
**“Valves and Cylinder Head Components: For M16A Engine with VVT”**
**“Pistons, Piston Rings, Connecting Rods and Cylinders Components: For M16A Engine with VVT”**
**“Main Bearings, Crankshaft and Cylinder Block Components: For M16A Engine with VVT”**

**Reference:**
For the tightening torque of fastener not specified in this section, refer to “Fastener Information: in Section 0A”.

www.cargeek.ir

www.CarGeek.ir

# Special Tools and Equipment

## Recommended Service Material

S5JB0A1418001

| Material | SUZUKI recommended product or Specification | | Note |
|---|---|---|---|
| Sealant | SUZUKI Bond No.1217G | P/No.: 99000–31260 | ☞ |
| Water tight sealant | SUZUKI Bond No.1207B | P/No.: 99000–31140 | ☞ |
| | SUZUKI Bond No.1207F | P/No.: 99000–31250 | ☞ / ☞ / ☞ |

**NOTE**

**Required service material is also described in the following.**
**“Timing Chain Cover Components: For M16A Engine with VVT”**
**“Timing Chain and Chain Tensioner Components: For M16A Engine with VVT”**
**“Camshaft, Tappet and Shim Components: For M16A Engine with VVT”**
**“Valves and Cylinder Head Components: For M16A Engine with VVT”**
**“Pistons, Piston Rings, Connecting Rods and Cylinders Components: For M16A Engine with VVT”**
**“Main Bearings, Crankshaft and Cylinder Block Components: For M16A Engine with VVT”**

## Special Tool

S5JB0A1418002

| | |
|---|---|
| 09911–97720<br>Oil seal installer<br>☞ 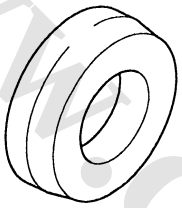 | 09911–97821<br>Oil seal installer<br>☞ 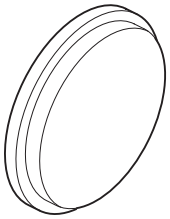 |
| 09913–75810<br>Bearing installer<br>☞ 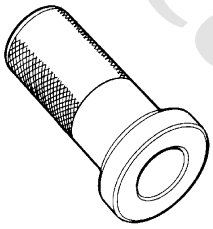 | 09915–64512<br>Compression gauge<br>☞ 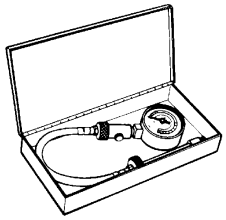 |
| 09915–64530<br>Compression gauge hose<br>☞ 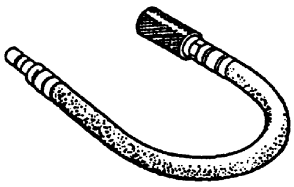 | 09915–67010<br>Compression gauge attachment (C)<br>☞ 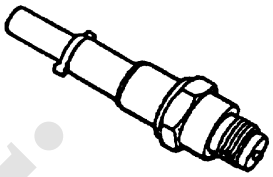 |
| 09915–67311<br>Vacuum gauge<br>☞ 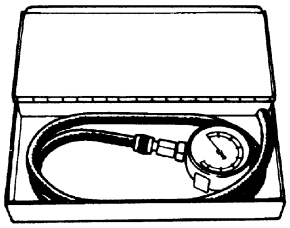 | 09916–14510<br>Valve lifter<br>☞ / ☞ 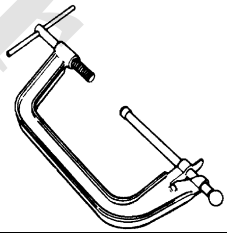 |
| 09916–14521<br>Valve spring compressor attachment<br>☞ / ☞ 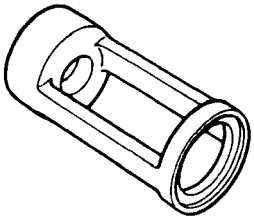 | 09916–34542<br>Reamer handle<br>☞ / ☞ 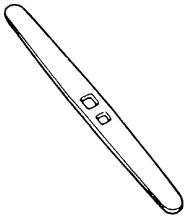 |

www.cargeek.ir

www.CarGeek.ir


| | |
|---|---|
| 09916–34550<br>Reamer handle<br>☞ 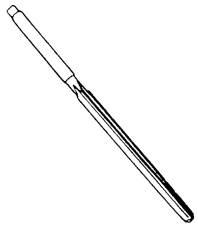 | 09916–37320<br>Valve guide outer reamer (10.5 mm)<br>☞ 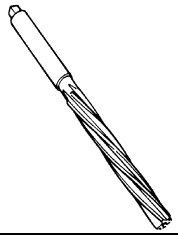 |
| 09916–44910<br>Valve guide installer & remover<br>☞ | 09916–56011<br>Valve guide installer attachment (protrusion: 11.5 mm)<br>☞ 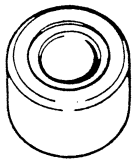 |
| 09916–58210<br>Valve guide installer handle<br>☞ / ☞ 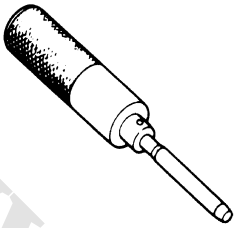 | 09916–67020<br>Tappet holder (Overseas)<br>☞ / ☞ 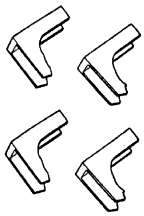 |
| 09916–67021<br>Tappet holder<br>☞ / ☞ 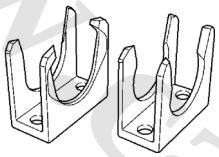 | 09916–77310<br>Piston ring compressor (50-125 mm)<br>☞ 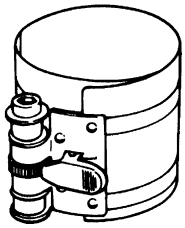 |
| 09916–84511<br>Forceps<br>☞ / ☞ 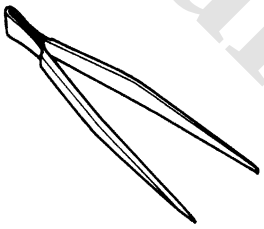 | 09917–68221<br>Camshaft pulley holder<br>☞ / ☞ 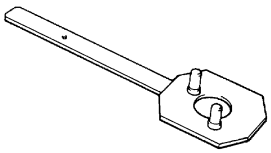 |
| 09917–98221<br>Valve guide stem attachment<br>☞ 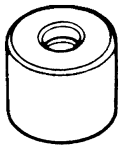 | 09924–17810<br>Flywheel holder (drive plate stopper)<br>☞ / ☞ 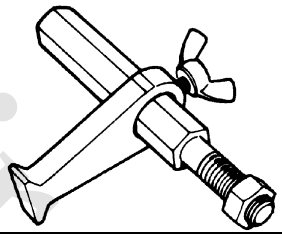 |
| 09926–58010<br>Bearing remover attachment<br>☞ 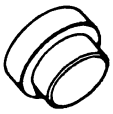 | 09944–36011<br>Steering wheel remover<br>☞ 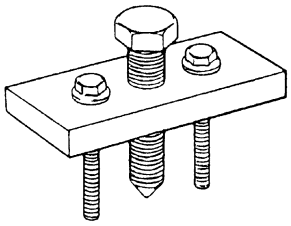 |

www.cargeek.ir

 www.CarGeek.ir

# For J20 Engine

## General Description

### Engine Construction Description

S5JB0A1421001

The engine is water-cooled, in line 4 cylinders, 4 stroke cycle gasoline unit with its DOHC (Double overhead camshaft) valve mechanism arranged for “V” type valve configuration consisting of 16 valves (4 valves/one cylinder). The double overhead camshaft is mounted over the cylinder head; it is driven from crankshaft through timing chains, and no push rods are provided in the valve train system.

www.cargeek.ir

www.cargeek.ir

www.CarGeek.ir


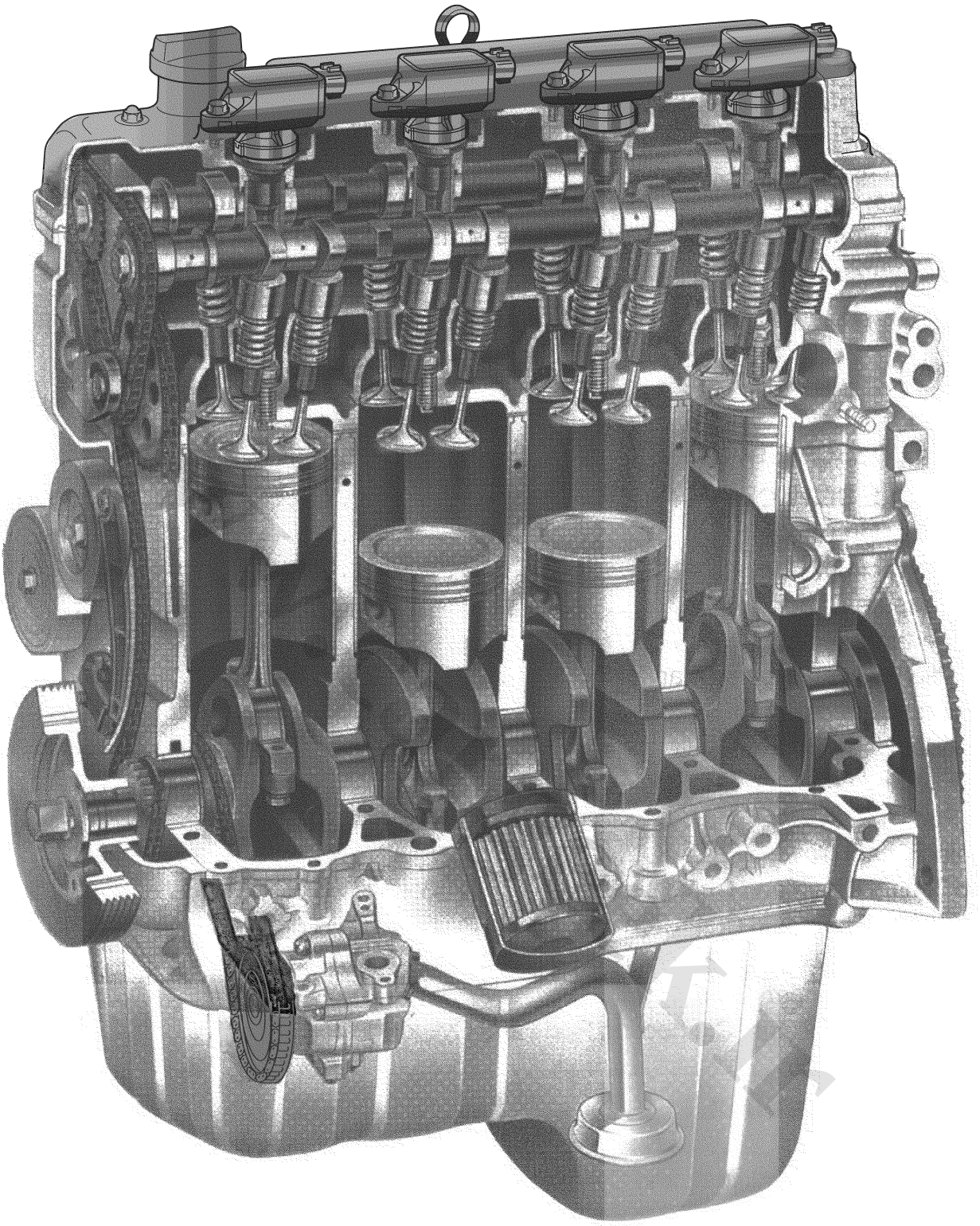

I5JB0A142069-02

www.cargeek.ir

 www.CarGeek.ir

## Air Cleaner Element Introduction

S5JB0A1421002

This air cleaner element is dry type. Remember that it needs cleaning according to “Air Cleaner Filter Inspection and Cleaning: For J20 Engine”.

## IMT (Intake Manifold Tuning) System

S5JB0A1421003

### Description

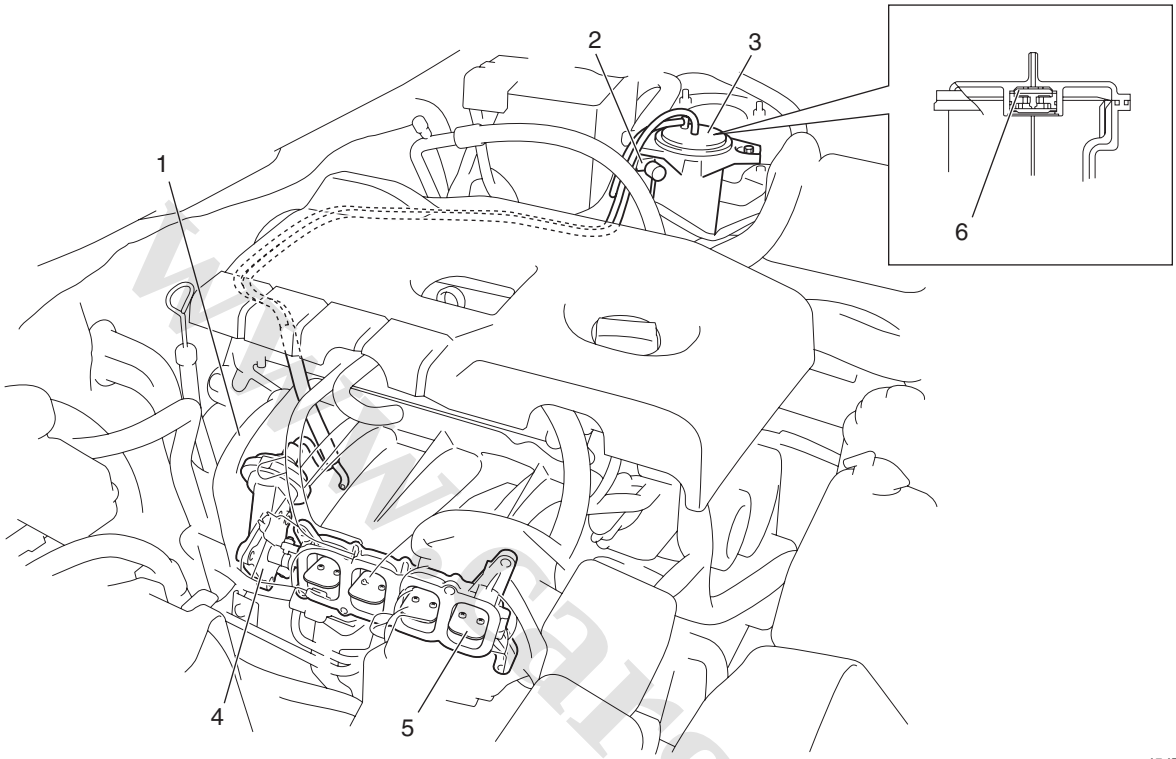


I5JB0A142062-01

IMT (Intake manifold tuning) system consists of the following items:

- IMT valve (5) fixed on intake manifold (1)
- IMT valve actuator (4)
- IMT vacuum solenoid valve (2)
- Vacuum tank (3)

Vacuum tank contains the one way check valve (6) to maintain negative pressure constantly regardless of variation in the intake manifold pressure.

Vacuum tank, therefore, supplies IMT vacuum solenoid valve actuator with stable negative pressure in whole engine speed ranges.

www.cargeek.ir

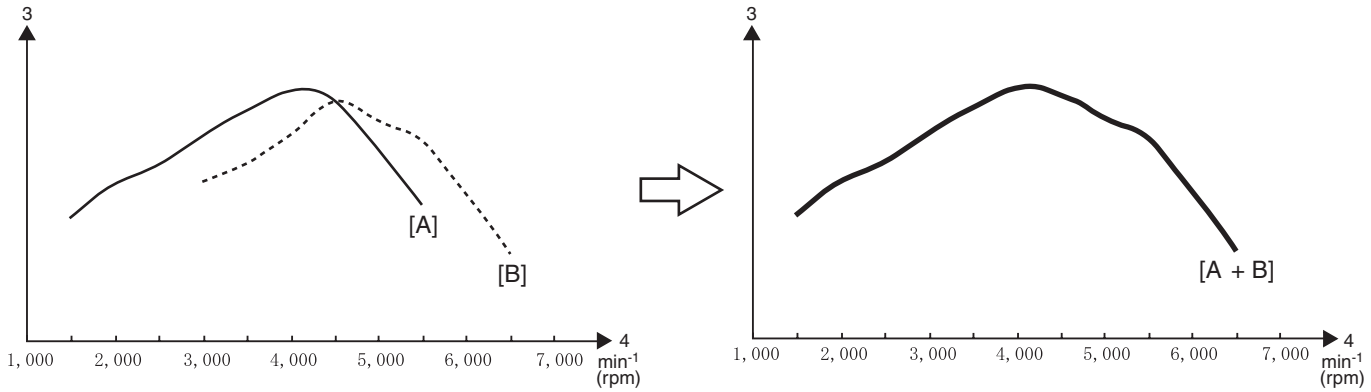


**[A]:**

**[B]:**

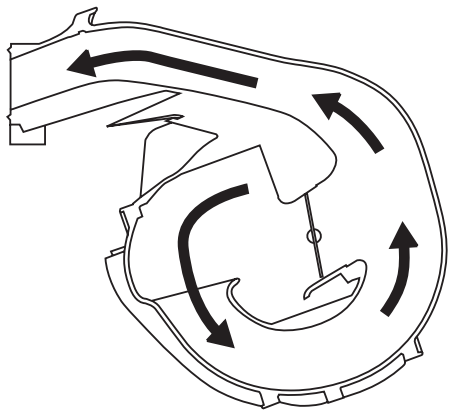

I5JB0A142063-02

| | | |
|---|---|---|
| [A]: IMT valve open | 1. IMT valve | 3. Engine torque |
| [B]: IMT valve closed | 2. Intake manifold | 4. Engine speed |

IMT (Intake manifold tuning) system varies effective length of intake pipe by opening and closing IMT valve in order to improve air volumetric efficiency.
As intake valve in cylinder head is opened and closed repeatedly, intake air pulsation always exists. If intake valve is opened when air pressure is momentarily maximum, intake air volumetric efficiency is increased. This momentary maximum air pressure depends on effective intake pipe length.

When IMT valve is fully open [A]:
The effective intake pipe length is shorter. Engine torque between middle and high engine speed ranges is improved, whilst it drops between low and middle engine speed ranges.

When IMT valve is totally closed [B]:
The effective intake pipe length is longer. Engine torque between middle and high engine speed ranges drops, while it is improved between low and middle ranges.

IMT system utilizes this characteristic of engine. IMT valve is closed between low and middle engine speed ranges, and opened between middle and high engine speed ranges.
In this way, engine torque is improved in whole engine speed ranges.

www.cargeek.ir

 www.CarGeek.ir

**System Operation**

IMT vacuum solenoid valve open:

When IMT vacuum solenoid valve is OFF, the actuator side of IMT vacuum solenoid valve is lead to relief port. Under this condition, the negative pressure is not applied to IMT valve actuator. The IMT valve, therefore, is totally opened due to the force of return spring in IMT valve actuator.

The effective intake pipe length, therefore, becomes shorter.

IMT valve closed:

When IMT vacuum solenoid valve is ON, the actuator side of IMT vacuum solenoid valve is lead to vacuum tank. Under this condition, the negative pressure of vacuum tank is applied to IMT valve actuator. The IMT valve, therefore, is totally closed because the return spring in IMT valve actuator is compressed due to the negative pressure.

The effective intake pipe length, therefore, becomes longer.

# Diagnostic Information and Procedures

## Compression Check

S5JB0A1424001

Check compression pressure on all 4 cylinders as follows:

1) Warm up engine.
2) Stop engine after warming up.

**NOTE**

**After warming up engine, place transmission gear shift lever in “Neutral” (shift selector lever to “P” range for A/T model), and set parking brake and block drive wheels.**

3) Remove engine cover.
4) Disconnect ignition coil couplers.
5) Disconnect ignition coils (1).
6) Remove all spark plugs (2).

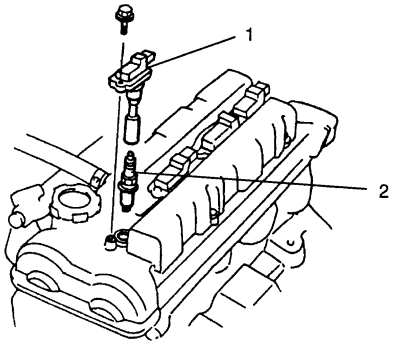


I2RH01140002-01

7) Disconnect fuel injector wire harness at the coupler.
8) Install special tool (Compression gauge) into spark plug hole.

**Special tool**
**(A): 09915–64512**
**(B): 09915–64530**
**(C): 09915–67010**

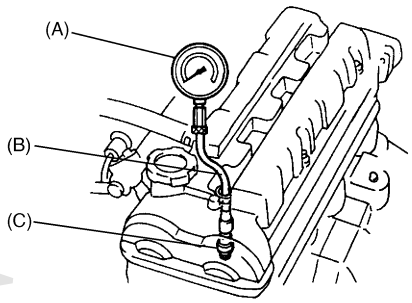


I5JB0A142001-01

9) Disengage clutch (to lighten starting load on engine) for M/T vehicle, and depress accelerator pedal all the way to make throttle fully open.

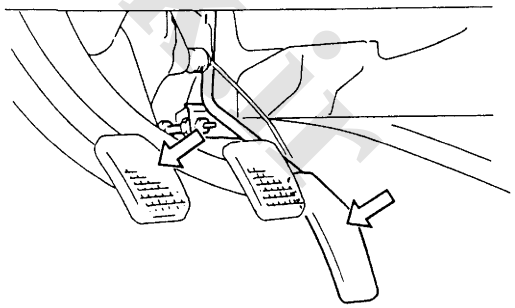

I2RH01140004-01

www.cargeek.ir

www.CarGeek.ir


10) Crank engine with fully charged battery, and read the highest pressure on compression gauge.

**NOTE**

- **For measuring compression pressure, crank engine at least 250 rpm by using fully charged battery.**
- **If measuring compression pressure is lower than limit value, check installation condition of special tool. If it is properly.**

**Compression pressure**
**Standard: 1400 kPa (14.0 kg/cm$^2$, 199.0 psi)**
**Limit: 1100 kPa (11.0 kg/cm$^2$, 158.0 psi)**
**Max. difference between any two cylinders: 100 kPa (1.0 kg/cm$^2$, 14.2 psi)**

11) Carry out Steps 8) through 10) on each cylinder to obtain 4 readings.
12) After checking, install spark plugs (2) and ignition coils (1).

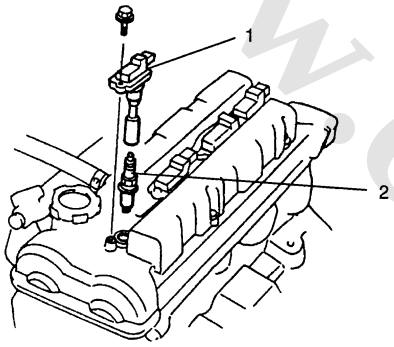

I2RH01140002-01

13) Install ignition coil couplers.
14) Connect injector wire harness at coupler.
15) Install engine cover.

## Engine Vacuum Check

S5JB0A1424002

The engine vacuum that develops in the intake line is a good indicator of the condition of the engine. The vacuum checking procedure is as follows:

1) Warm up engine to normal operating temperature and make sure that engine idle speed is within specification.

**NOTE**

**After warming up engine, place transmission gear shift lever in “Neutral” (shift selector lever to “P” range for A/T model), and set parking brake and block drive wheels.**

2) Stop engine and remove engine cover.
3) Disconnect vacuum hose (1) from vacuum pipe.
4) Connect special tools (vacuum gauge and hose joint) to vacuum hose of intake manifold side.

**Special tool**
**(A): 09915–67311**
**(B): 09918–08210**
**(C): 09355–35754–600 Hose, SUZUKI GENUINE PARTS**
**(D): 09367–04002 3-way joint, SUZUKI GENUINE PARTS**

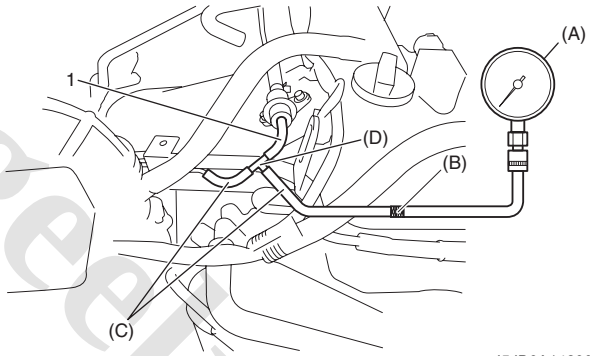

I5JB0A142002-01

5) Start engine and run engine at specified idle speed, and read vacuum gauge. Vacuum should be within specification.

**Vacuum specification**
**52.6 – 65.8 kPa (40 – 50 cmHg, 15.7 – 19.7 in.Hg) at specified idle speed**

6) After checking, remove special tools.
7) Connect vacuum hose to vacuum pipe.
8) Install engine cover.

www.cargeek.ir

 www.CarGeek.ir

## Valve Lash (Clearance) Inspection

S5JB0A1424003

1) Remove negative cable at battery.
2) Remove cylinder head cover referring to “Cylinder Head Cover Removal and Installation: For J20 Engine”.
3) Using 17 mm wrench, turn crankshaft pulley (1) clockwise until index (2) of cylinder block and index (3) of crankshaft pulley (1) are aligned.
4) Check whether cam position (1) of No.1 cylinder is at the specified position [A] as shown in figure.
   If cam position is [B], locate cam position to [A] by turning crankshaft one rotation.

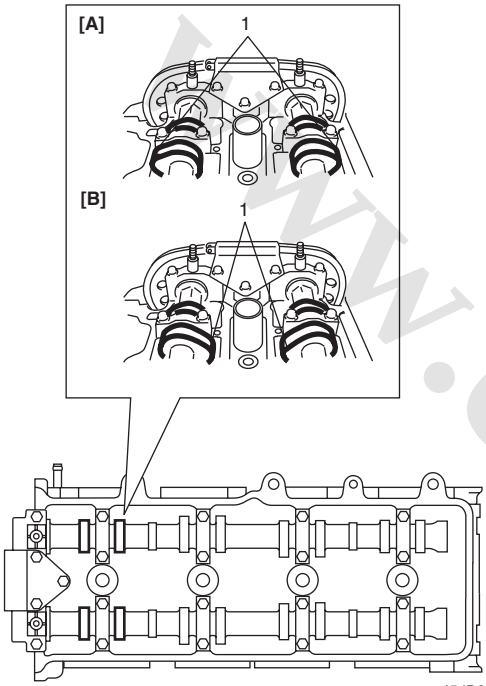


I5JB0A142064-01

| | |
|---|---|
| [A]: | TDC in compression for No.1 cylinder |
| [B]: | TDC in exhaust for No.1 cylinder |

5) Check valve lashes with thickness gauge (4) according to the following procedure.
   a) Check valve lashes of cylinder No.1.
   b) Turn crankshaft pulley by 180° clockwise.
   c) Check valve lashes of cylinder No.3.
   d) In the same manner as b) – c), check valve lashes of cylinder No.4 then cylinder No.3.

If valve lash is out of specification, record valve lash and adjust it to specification by replacing shim.

**Valve clearance specification**

| | When cold (Coolant temperature is 15 – 25 °C (59 – 77 °F)) | When hot (Coolant temperature is 60 – 68 °C (140 – 154 °F)) |
|---|---|---|
| Intake | 0.18 – 0.22 mm (0.007 – 0.009 in.) | 0.21 – 0.27 mm (0.008 – 0.011 in.) |
| Exhaust | 0.28 – 0.32 mm (0.011 – 0.013 in.) | 0.30 – 0.36 mm (0.012 – 0.014 in.) |

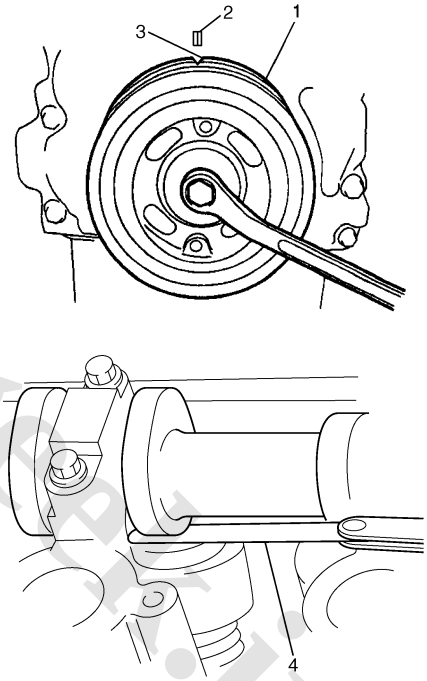


I5JB0A142065-01

www.cargeek.ir

**Replacement of Shim**

1) Close the valve whose shim (2) is to be replaced by turning crankshaft, then turn tappet (3) till its cut section (1) faces inside as shown in the figure.

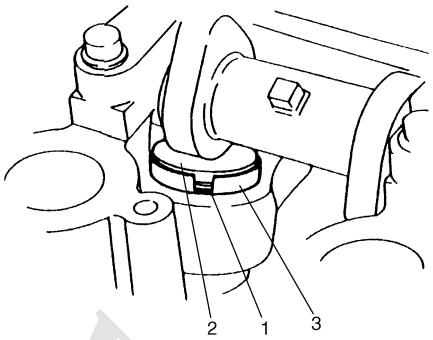


I2RH0B140006-01

2) Lift down the valve by turning crankshaft to 360°.
3) Hold tappet at that position using special tool as follows.
   a) Remove its housing bolts.
   b) Check housing No. and select special tool corresponding to housing No., referring to "Special tool selection table".

**Special tool selection table**

| No. on camshaft housing | Embossed mark on special tool |
|---|---|
| I2, I3, I4, I5 | IN |
| E2, E3, E4, E5 | EX |

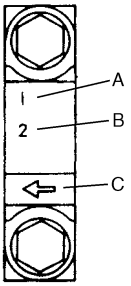


I5JB0A142066-01

| | |
|---|---|
| A: | I: Intake side or E: Exhaust side |
| B: | Position from timing chain side |
| C: | Pointing to timing chain side |

c) Hold down the tappet so as not to contact the shim by installing special tool on camshaft housing with housing bolt (1) tighten housing bolts to specified torque.

**Special tool**
**(A): 09916–66510**

**Tightening torque**
**Camshaft housing bolts (a): 11 N·m (1.1 kgf-m, 8.0 lb-ft) for tightening of special tool**

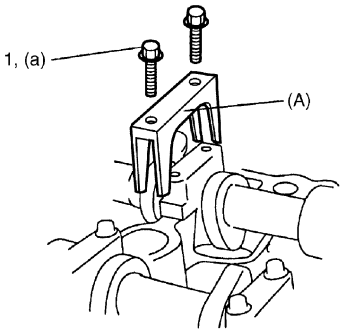


I3RM0A140005-01

4) Turn camshaft by approximately 90° clockwise and remove shim (3).

**⚠ WARNING**

**Never put in the hand between camshaft and tappet.**

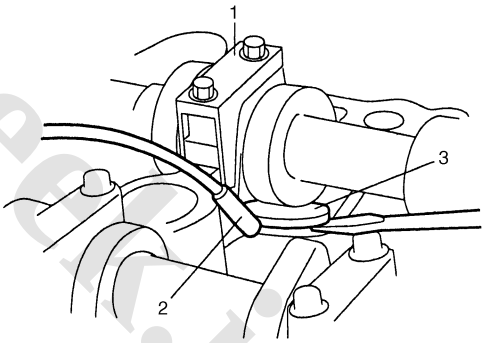


I2RH0B140013-01

| | |
|---|---|
| 1. Special tool | 2. Magnet |

 www.CarGeek.ir

5) Using a micrometer (2), measure the thickness of the removed shim (1), and determine replacement shim by calculating the thickness of new shim with the following formula and table.

**Shim thickness specification**
**Intake side:**
**A = B + C – 0.20 mm (0.008 in.)**
**Exhaust side:**
**A = B + C – 0.30 mm (0.012 in.)**
**A: Thickness of new shim**
**B: Thickness of removed shim**
**C: Measured valve clearance**

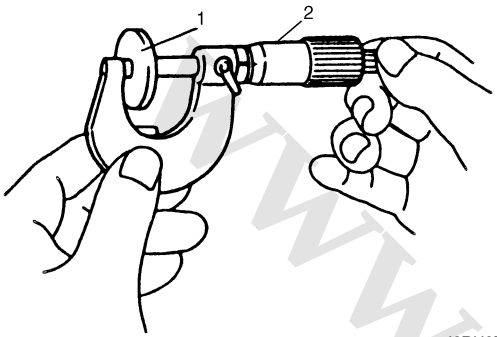

I2RH0B140014-01

**For example of intake side:**
When thickness of removed shim is 2.40 mm (0.094 in.), and measured valve clearance is 0.45 mm (0.018 in.).
A = 2.40 mm (0.094 in.) + 0.45 mm (0.018 in.) – 0.20 mm (0.008 in.) = 2.65 mm (0.104 in.)
Calculated thickness of new shim = 2.65 mm (0.104 in.)

6) Select new shim No. (1) with a thickness as close as possible to calculated value.

**Available new shims No.**

| Thickness mm (in.) | Shim No. | Thickness mm (in.) | Shim No. |
|---|---|---|---|
| 2.175 (0.0856) | 218 | 2.600 (0.1024) | 260 |
| 2.200 (0.0866) | 220 | 2.625 (0.1033) | 263 |
| 2.225 (0.0876) | 223 | 2.650 (0.1043) | 265 |
| 2.250 (0.0886) | 225 | 2.675 (0.1053) | 268 |
| 2.275 (0.0896) | 228 | 2.700 (0.1063) | 270 |
| 2.300 (0.0906) | 230 | 2.725 (0.1073) | 273 |
| 2.325 (0.0915) | 233 | 2.750 (0.1083) | 275 |
| 2.350 (0.0925) | 235 | 2.775 (0.1093) | 278 |
| 2.375 (0.0935) | 238 | 2.800 (0.1102) | 280 |
| 2.400 (0.0945) | 240 | 2.825 (0.1112) | 283 |
| 2.425 (0.0955) | 243 | 2.850 (0.1122) | 285 |
| 2.450 (0.0965) | 245 | 2.875 (0.1132) | 288 |
| 2.475 (0.0974) | 248 | 2.900 (0.1142) | 290 |
| 2.500 (0.0984) | 250 | 2.925 (0.1152) | 293 |
| 2.525 (0.0994) | 253 | 2.950 (0.1161) | 295 |
| 2.550 (0.1004) | 255 | 2.975 (0.1171) | 298 |
| 2.575 (0.1014) | 258 | 3.000 (0.1181) | 300 |

7) Install new shim facing shim No. side with tappet.

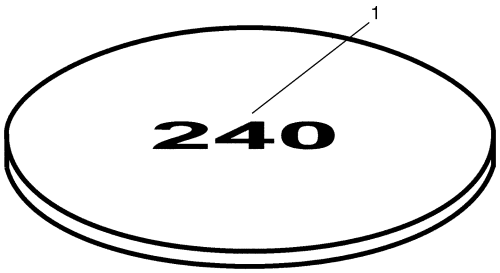

I2RH0B140015-01

8) Lift valve by turning crankshaft counterclockwise (in opposite direction against above Step 4)) and remove special tool.

**Special tool**
**(A): 09916–66510**

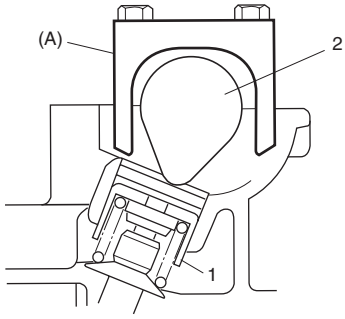

I3RM0A140006-01

| | |
|---|---|
| 1. Tappet | 2. Camshaft |

9) Install camshaft housing (1) and tighten bolts to specified torque.

**Tightening torque**
**Camshaft housing bolt (a): 11 N·m (1.1 kgf-m, 8.0 lb-ft)**

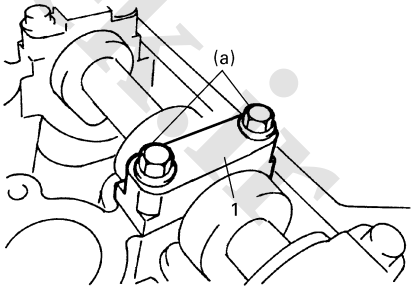

I2RH0B140149-01

10) Turn crankshaft pulley more than 4 rotations.
11) Check valve clearance again after adjusting it.
12) After checking and adjusting all valves.
13) Install cylinder head cover referring to “Cylinder Head Cover Removal and Installation: For J20 Engine”.

www.cargeek.ir

# Repair Instructions

## Air Cleaner Assembly Removal and Installation

S5JB0A1426044

### Removal

1) Disconnect breather hose (1) from air cleaner outlet hose (2).
2) Remove air cleaner outlet hose (2).
3) Disconnect MAF sensor connector (3).
4) Remove air cleaner case (4).

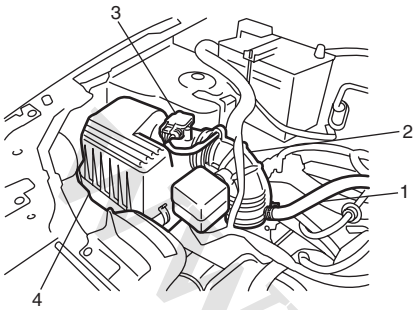


I5JB0A142003-01

### Installation

1) Install air cleaner case (4).
2) Connect MAF sensor connector (3).
3) Install air cleaner outlet hose (2).
4) Connect breather hose (1) to air cleaner outlet hose (2).

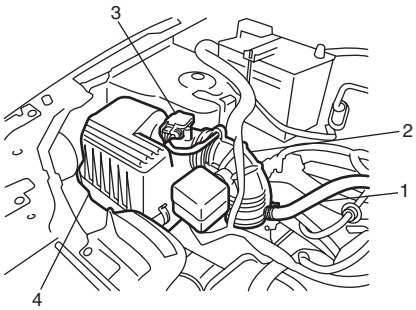


I5JB0A142003-01

## Air Cleaner Filter Removal and Installation

S5JB0A1426002

### Removal

1) Remove air cleaner upper case (1) from lower case after hooking clamps (2) from upper case.
2) Remove air cleaner filter.

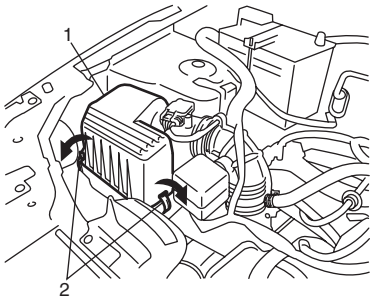


I5JB0A142004-01

### Installation

Reverse removal procedure for installation.

## Air Cleaner Filter Inspection and Cleaning

S5JB0A1426003

### Inspection

Check air cleaner filter for dirt.

### Cleaning

Blow off dust by compressed air from air outlet side of element.

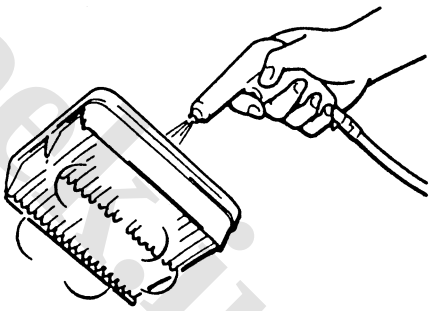

I2RH01140007-01

www.cargeek.ir

 www.CarGeek.ir

## Throttle Body and Intake Manifold Components

S5JB0A1426007

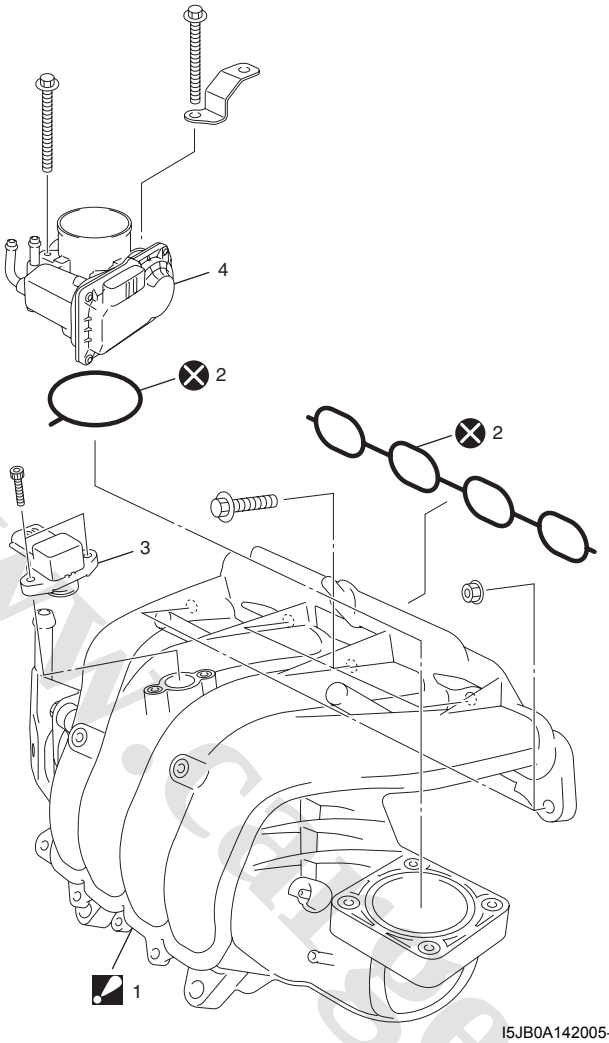


I5JB0A142005-01

| | |
|---|---|
| 1. Intake manifold<br>: Never disassemble intake manifold. Disassembly will spoil its original performance. If faulty condition is found, replace it with new one. | 4. Electric throttle body assembly |
| 2. O-ring | ⊗ : Do not reuse. |
| 3. MAP sensor | |

## Throttle Body On-Vehicle Inspection

S5JB0A1426045

Check electric throttle body assembly referring to “Throttle Valve Operation Check” and “Electric Throttle Body Assembly Operation Check” under “Electric Throttle Body Assembly On-Vehicle Inspection: in Section 1C”.

## Electric Throttle Body Assembly Removal and Installation

S5JB0A1426046

### Removal

1) Disconnect negative cable at battery.
2) Drain coolant referring to “Cooling System Draining: in Section 1F”.
3) Disconnect breather hose (1) from air cleaner outlet hose (2).
4) Disconnect air cleaner outlet hose (2) from air cleaner case and electric throttle body assembly.

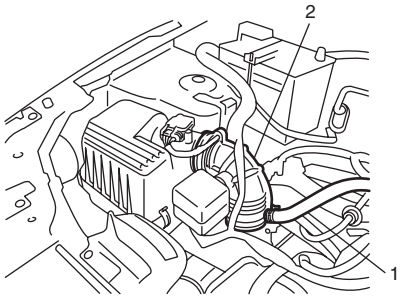


I5JB0A142006-01

5) Disconnect engine coolant hoses (1) from electric throttle body assembly (2).

www.cargeek.ir

6) Disconnect connector (3) from electric throttle body assembly.

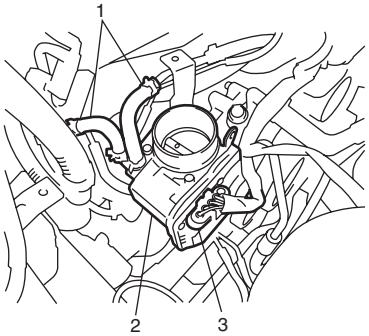


I5JB0A142007-01

7) Remove electric throttle body assembly from intake manifold.

### Installation

1) Clean mating surfaces, and install new throttle body gasket to intake manifold.
2) Install electric throttle body assembly (1) to intake manifold.
3) Connect connector (2) to electric throttle body assembly securely.
4) Connect engine coolant hoses (3) to electric throttle body assembly (1).

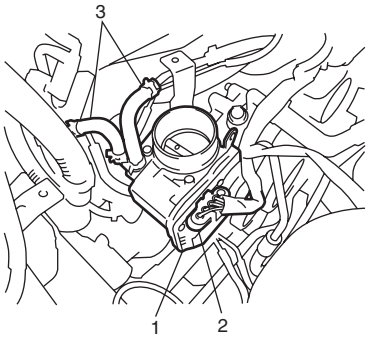


I5JB0A142008-01

5) Connect air cleaner outlet hose (1) to air cleaner case and electric throttle body assembly.
6) Connect breather hose (2) to air cleaner outlet hose (1).

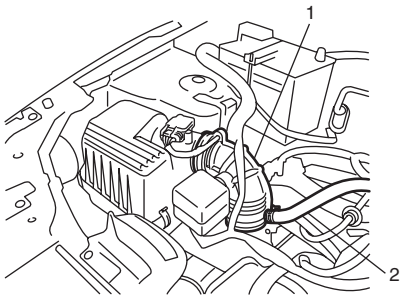


I5JB0A142009-01

7) Refill coolant referring to “Cooling System Flush and Refill: in Section 1F”.
8) Connect negative cable at battery.
9) Perform calibration of electric throttle body assembly referring to “Electric Throttle Body System Calibration: in Section 1C” if replaced.

## Throttle Body Cleaning

S5JB0A1426010

Clean electric throttle body assembly referring to “Throttle Valve Operation Check” under “Electric Throttle Body Assembly On-Vehicle Inspection: in Section 1C”.

## Intake Manifold Removal and Installation

S5JB0A1426012

**⚠ CAUTION**

**Never disassemble intake manifold. Disassembly will spoil its original performance. If faulty condition is found, replace it with new one.**

### Removal

1) Disconnect negative cable at battery.
2) Drain cooling system referring to “Cooling System Draining: in Section 1F”.
3) Remove engine cover.
4) Remove air cleaner outlet hose (1) and breather hose (2).

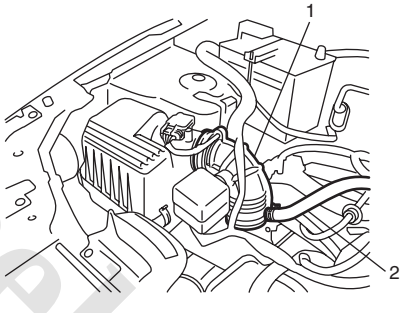


I5JB0A142009-01

5) Remove electric throttle body assembly referring to “Electric Throttle Body Assembly Removal and Installation: For J20 Engine”.
6) Disconnect the following electric lead wires:
   - EVAP canister purge valve coupler (1)
   - MAP sensor coupler (2)
7) Disconnect the following hoses:
   - Brake booster hose (3) from intake manifold
   - PCV hose (4) from PCV valve
   - Fuel pressure regulator vacuum hose (5) from intake manifold
   - Vacuum hose (6) from EVAP canister purge valve
   - Vacuum hose (7) from vacuum tank
   - EVAP canister purge hose (8) from EVAP canister purge valve
8) Remove EGR pipe bolt (9) from EGR pipe.

www.cargeek.ir

 www.CarGeek.ir

9) Remove EVAP canister purge valve bracket (10) form intake manifold.

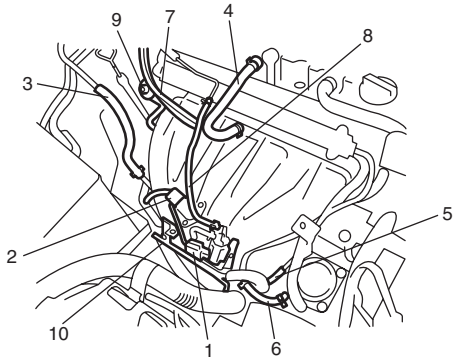


I5JB0A142010-01

10) Remove water pump and generator drive belt referring to “Water Pump and Generator Drive Belt Removal and Installation (For J20 Engine): in Section 1J”.
11) With hose connected, detach P/S pump referring to “P/S Pump Removal and Installation for J20 Engine Model: in Section 6C”.
12) Remove intake manifold and O-ring from cylinder head.

**Installation**

Reverse removal procedure for installation noting the followings.

- Use new intake manifold O-ring.
- Use new EGR pipe gasket.
- Install intake manifold bolt (2) and nut (1) as shown in figure.

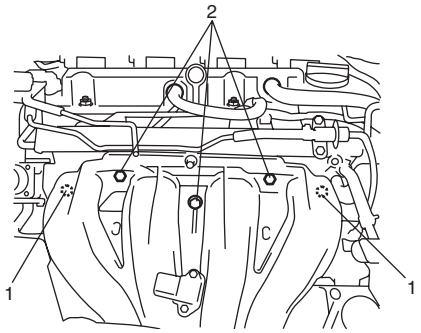


I5JB0A142011-01

- Check to ensure that all removed parts are back in place.
  Reinstall any necessary parts which have not been reinstalled.
- Adjust water pump and generator drive belt referring to “Water Pump and Generator Drive Belt On-Vehicle Inspection (For J20 Engine): in Section 1J”.
- Refill cooling system referring to “Cooling System Flush and Refill: in Section 1F”.
- Upon completion of installation, turn ignition switch ON but engine OFF and check for fuel leaks.
- Finally, start engine and check for engine coolant leaks.

## Cylinder Head Cover Removal and Installation

S5JB0A1426013

**Removal**

1) Disconnect negative cable at battery.
2) Remove engine cover.
3) Disconnect ignition coil couplers (1).
4) Remove ignition coils (4).
5) Remove oil level gauge (6).
6) Disconnect CMP sensor coupler (5) from cylinder head cover.
7) Disconnect breather hose (2) and PCV hose (3) from cylinder head cover (7).

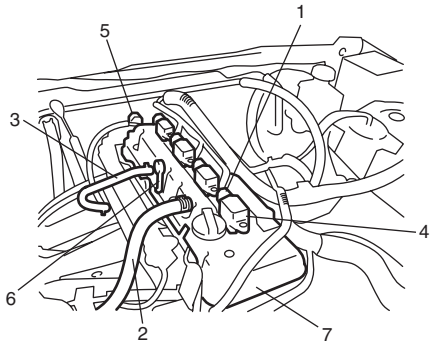


I5JB0A142012-02

8) Remove PCV valve from cylinder head cover.
9) Remove cylinder head cover nuts in such order as indicated in the figure.

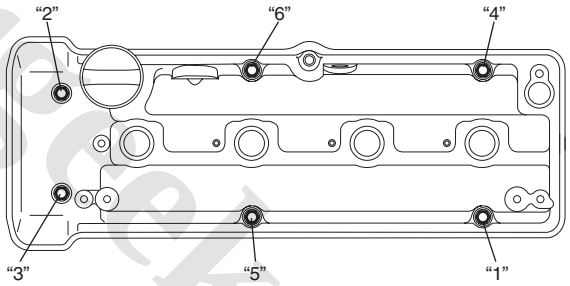


I5JB0A142013-01

www.cargeek.ir

**Installation**

1) Install PCV valve to cylinder head cover referring to “EGR Valve Removal and Installation: in Section 1B”.
2) Remove oil, old sealant and dust from sealing surfaces on cylinder head and cover.
3) Install new cylinder head side seals (1) to cylinder head.
4) Apply sealant “A” to cylinder head sealing surface area as shown in figure.

   **“A”: Water tight sealant 99000–31250 (SUZUKI Bond No.1207F)**

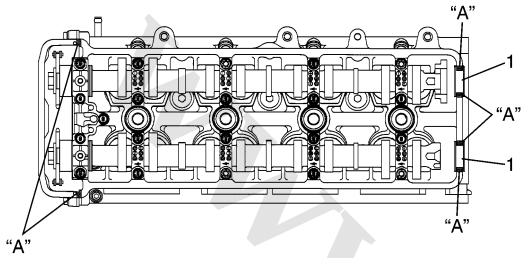


I5JB0A142067-01

5) Install new O-rings (3) and new cylinder head cover gasket (2) to cylinder head cover (1).

   **NOTE**

   **Be sure to check each of these parts for deterioration or any damage before installation and replace if found defective.**

6) Install cylinder head cover to cylinder head.

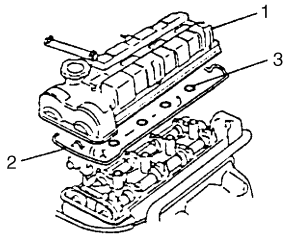


I5JB0A142068-02

7) Tighten cylinder head cover nuts in such order as indicated in the figure a little at a time till they are tightened to specified torque.
   - Use new seal washers.

   **Tightening torque**
   **Cylinder head cover nut (a): 11 N·m (1.1 kgf-m, 8.0 lb-ft)**

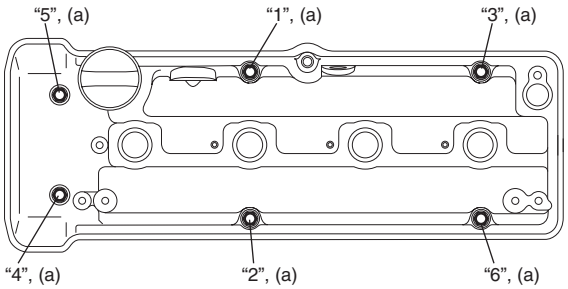


I5JB0A142014-01

8) Install oil level gauge (1).
9) Connect CMP sensor coupler (4).
10) Connect breather hose (2) and PCV hose (3) to cylinder head cover.

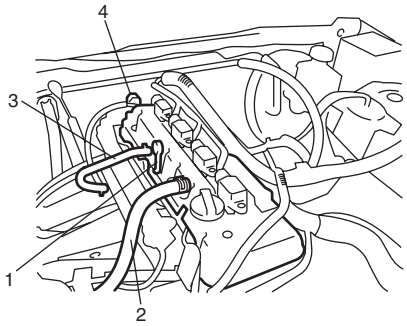


I5JB0A142015-01

11) Install ignition coils referring to “Ignition Coil Assembly (Including ignitor) Removal and Installation: in Section 1H”.
12) Install engine cover.
13) Connect negative cable at battery.

www.cargeek.ir

 www.CarGeek.ir

## Engine Mountings Components

S5JB0A1426043

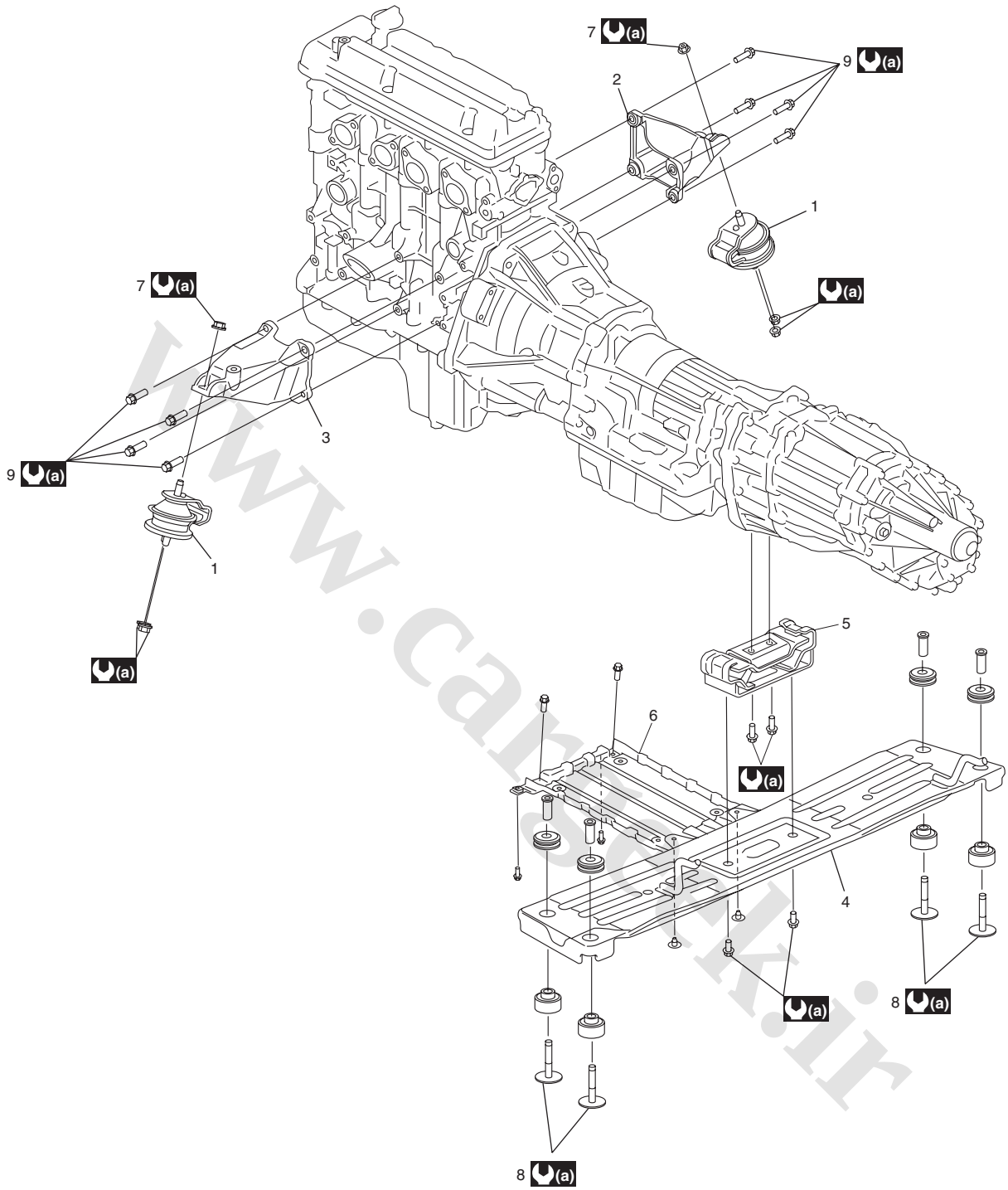


I5JB0A142016-01

| | |
|---|---|
| 1. Engine front mounting | 6. Engine splash cover |
| 2. Engine front mounting right bracket | 7. Engine front mounting nut |
| 3. Engine front mounting left bracket | 8. Engine rear mounting member bolt |
| 4. Engine rear mounting member | 9. Engine front mounting bracket bolt |
| 5. Engine rear mounting | (a) : 55 N·m (5.5 kgf-m, 40.0 lb-ft) |

www.cargeek.ir

## Engine Assembly Removal and Installation

S5JB0A1426019

### Removal

1) Relieve fuel pressure according to “Fuel Pressure Relief Procedure: in Section 1G”.
2) Disconnect negative cable at battery.
3) Drain engine oil referring to “Engine Oil and Filter Change: in Section 0B”.
4) Drain transmission oil referring to “Manual Transmission Oil Change: in Section 5B”.
5) Drain A/T fluid referring to “A/T Fluid Change: in Section 5A”.
6) Drain coolant referring to “Cooling System Draining: in Section 1F”.
7) Remove Air cleaner case referring to “Air Cleaner Assembly Removal and Installation: For J20 Engine”.
8) Remove water pump and generator drive belt referring to “Water Pump and Generator Drive Belt Removal and Installation (For J20 Engine): in Section 1J”.
9) Disconnect the following electric wires:
   - MAP sensor (1)
   - ECT sensor (2)
   - EGR valve (3)
   - CMP sensor (4)
   - EVAP canister purge valve (5)
   - Ignition coil assembly (6)
   - Injectors (7)
   - HO2S (8)
   - A/F sensor (9)
   - Engine oil pressure switch (10)
   - CKP sensor (11)
   - Back up light switch (For M/T model) (12)
   - Generator (13)
   - Starting motor (14)
   - Ground terminal
   - Magnet clutch switch of A/C compressor (if equipped) (15)
   - P/S pump (16)
   - Electric throttle body (17)
   - Transfer actuator (18)
   - Center differential switch (19)
   - 4L/N switch (20)
   - Each wire harness clamps
   - Input shaft speed sensor (For A/T model) (26)
   - Output shaft speed sensor (For A/T model) (27)
   - Solenoid valve (For A/T model) (28)
   - Transmission range sensor (For A/T model) (29)
10) Disconnect the following hoses:
   - Brake booster hose (21) from intake manifold
   - Radiator inlet and outlet hoses (22) from each pipe
   - Heater inlet and outlet hoses (23) from each pipe
   - Fuel hoses (24) from fuel pipes
   - Purge hose (25) from purge valve
   - Clutch oil pipe from transmission front case (For M/T model)
   - A/T fluid cooler hoses from radiator (For A/T model)
11) Disconnect A/T select cable from A/T (For A/T model).

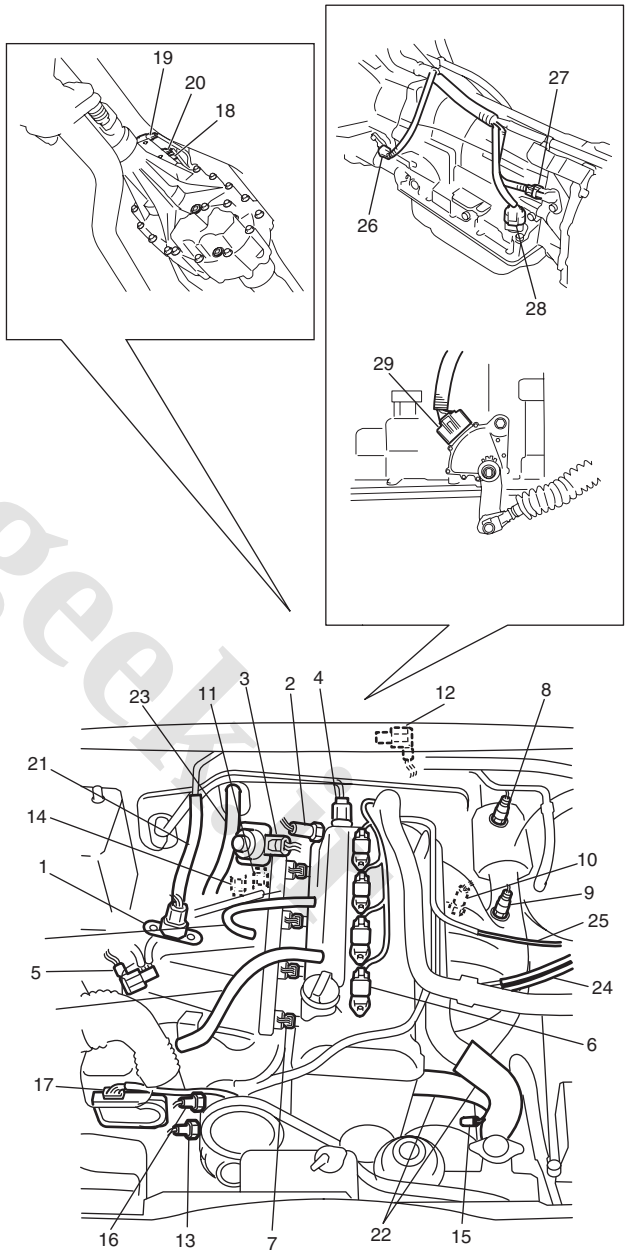


I5JB0A142017-01

 www.CarGeek.ir

12) For M/T model, remove shift control lever referring to “Transmission Shift Control Lever Removal and Installation: in Section 5B”.
13) Remove exhaust No.1, No.2 and center pipes referring to “Exhaust System Components: in Section 1K”.
14) Remove front and rear propeller shafts referring to “Propeller Shaft Removal and Installation: in Section 3D”.
15) With hose connected, detach P/S pump from its bracket (if equipped) referring to “P/S Pump Removal and Installation for J20 Engine Model: in Section 6C”.

⚠ **CAUTION**

**Suspend removed P/S pump at a place where no damage will be caused during removal and installation of engine assembly.**

16) With hose connected, detach A/C compressor from its bracket (if equipped) referring to “Compressor Assembly Removal and Installation for J20 Engine Model: in Section 7B”.

⚠ **CAUTION**

**Suspend removed A/C compressor at a place where no damage will be caused during removal and installation of engine assembly.**

17) Support front suspension frame and engine rear mounting member using jack (2).
18) Carry out Step 1) to 12) of “Removal” under “Front Suspension Frame, Stabilizer Bar and/or Bushings Removal and Installation: in Section 2B” in order to lower engine with front suspension frame.
19) Remove front suspension frame mounting bolts (1).

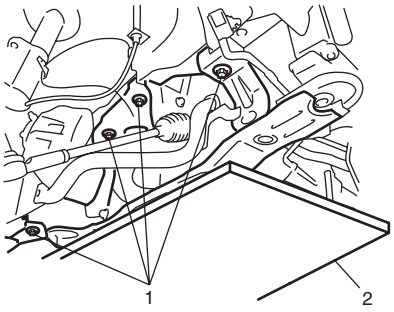

I5JB0A142018-01

20) Remove engine rear mounting member bolts (1).

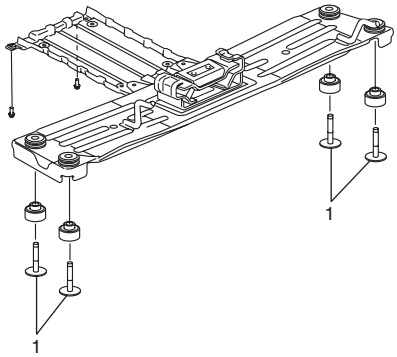

I5JB0A142019-01

21) Before lowering engine, recheck to make sure all hoses, electric wires and cables are disconnected from engine.
22) Lower engine with transmission, transfer, front suspension frame and engine rear mounting member from engine compartment.

⚠ **CAUTION**

**Before lowering engine, in order to avoid damage to A/C compressor and P/S pump, make clearance by rising them.**

23) Disconnect transmission from engine referring to “Manual Transmission Assembly Dismounting and Remounting: in Section 5B” or “Automatic Transmission Unit Components: in Section 5A”, if necessary.
24) Remove engine with engine front mounting bracket (1) from engine front mounting (2), if necessary.

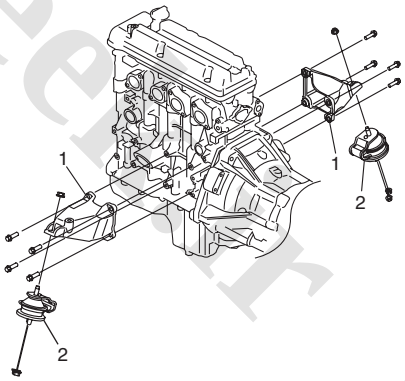

I5JB0A142020-01

25) Remove clutch cover and clutch disk referring to “Clutch Cover, Clutch Disc and Flywheel Removal and Installation: in Section 5C”, if necessary.

www.cargeek.ir

**Installation**

1) Install clutch cover and clutch disk referring to “Clutch Cover, Clutch Disc and Flywheel Removal and Installation: in Section 5C”, if removed.
2) Install engine with engine front mounting bracket to engine front mounting. For tightening torque, referring to “Engine Mountings Components: For J20 Engine”, if removed.
3) Connect transmission from engine referring to “Manual Transmission Assembly Dismounting and Remounting: in Section 5B” or “Automatic Transmission Unit Components: in Section 5A”, if removed.
4) Lift engine with transmission, front suspension frame and engine rear mounting member into engine compartment with jack.

   ⚠ **CAUTION**

   **Before lifting engine, to avoid damage to A/C compressor and P/S pump, make clearance by rising them.**

5) Tighten engine rear mounting member bolt referring to “Engine Mountings Components: For J20 Engine”.
6) Carry out Step 5) to 19) of “Installation” under “Front Suspension Frame, Stabilizer Bar and/or Bushings Removal and Installation: in Section 2B” in order to lift engine with front suspension frame.
7) Remove engine jack.
8) Install front and rear propeller shafts referring to “Propeller Shaft Removal and Installation: in Section 3D”.
9) Install exhaust No.1, No.2 and center pipes referring to “Exhaust System Components: in Section 1K”.
10) Install A/C compressor to its bracket (if equipped) referring to “Compressor Assembly Removal and Installation for J20 Engine Model: in Section 7B”.
11) Install P/S pump to its bracket referring to “P/S Pump Removal and Installation for J20 Engine Model: in Section 6C”.
12) Return disconnected hoses, cables and electric wire noting the followings.
    - Tighten nuts to specified torque.

    **Tightening torque**
    **Starting motor terminal nut: 11 N·m (1.1 kgf-m, 8.0 lb-ft)**
    **Generator terminal nut: 7 N·m (0.7 kgf-m, 5.0 lb-ft)**

13) Install water pump and generator drive belt referring to “Water Pump and Generator Drive Belt Removal and Installation (For J20 Engine): in Section 1J”.
14) Adjust water pump and generator drive belt tension referring to “Water Pump and Generator Drive Belt On-Vehicle Inspection (For J20 Engine): in Section 1J”.
15) Install air cleaner assembly referring to “Air Cleaner Assembly Removal and Installation: For J20 Engine”.
16) Check all removed parts are back in place.
17) For A/T model, adjust select cable referring to “Select Cable Adjustment: in Section 5A”.
18) Refill cooling system with coolant referring to “Cooling System Flush and Refill: in Section 1F”.
19) Refill engine with engine oil referring to “Engine Oil and Filter Change: in Section 0B”.
20) Bleed air from clutch system referring to “Air Bleeding of Brake System: in Section 4A” for air bleeding procedure.
21) Install engine hood after disconnecting windshield washer hose.
22) Connect negative cable at battery.
23) With engine OFF, turn ignition switch to ON position and check for fuel leakage.
24) Start engine and check coolant, oil and exhaust gas leakage at each connection.

www.cargeek.ir

 www.CarGeek.ir

## Timing Chain Cover Components

S5JB0A1426020

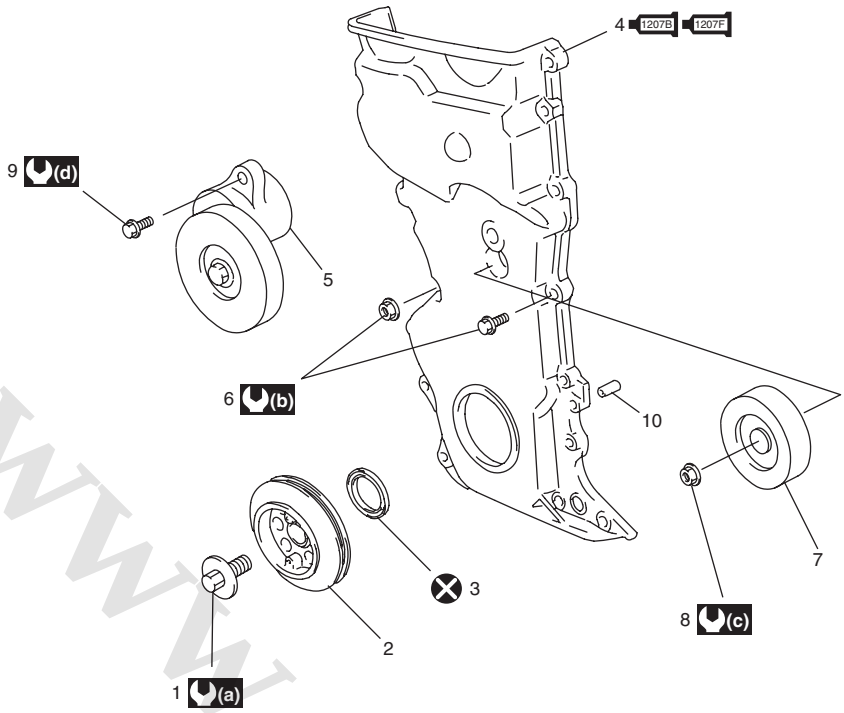


I5JB0A142021-01

| | | |
|---|---|---|
| 1. Crankshaft pulley bolt | 6. Timing chain cover bolt and nut | (a) : 150 N·m (15.0 kgf-m, 108.5 lb-ft) |
| 2. Crankshaft pulley | 7. Idler pulley | (b) : 11 N·m (1.1 kgf-m, 8.0 lb-ft) |
| 3. Oil seal<br>: Apply engine oil to oil seal lip. | 8. Idler pulley nut | (c) : 42 N·m (4.2 kgf-m, 30.5 lb-ft) |
| 1207B 1207F 4. Timing chain cover<br>: See “A”<br>: See “B” | 9. Generator belt tensioner bolt | (d) : 25 N·m (2.5 kgf-m, 18.0 lb-ft) |
| 5. Belt tensioner | 10. Pin | : Do not reuse. |
| “A”: Apply sealant 99000-31140 to the mating surface of cylinder and cylinder head. | | |
| “B”: Apply sealant 99000-31250 to the mating surface of timing chain cover referring to the figure of Step 3) in “Timing Chain Cover Removal and Installation: For J20 Engine”. | | |

## Timing Chain Cover Removal and Installation

S5JB0A1426021

### Removal

1) Remove engine assembly from vehicle referring to “Engine Assembly Removal and Installation: For J20 Engine”.
2) Remove oil pan referring to “Oil Pan and Oil Pump Strainer Removal and Installation: For J20 Engine in Section 1E”.
3) Remove cylinder head cover referring to “Cylinder Head Cover Removal and Installation: For J20 Engine”.
4) Remove crankshaft pulley bolt.
   To lock crankshaft pulley (1), use special tool (camshaft pulley holder) as shown in figure.

   **Special tool**
   **(a): 09917–68221**

**NOTE**

**Be sure to use the following bolts instead of pins in order to fix crankshaft pulley by special tool.**
**Bolt size: M8, P1.25 L = 25 mm (0.98 in.)**
**Strength: 7T**

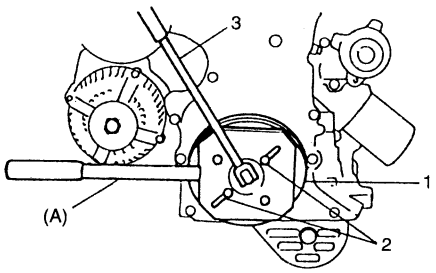


I2RH01140051-01

| | |
|---|---|
| 2. Bolt | 3. Wrench |

www.cargeek.ir

5) Remove crankshaft pulley (1).
   To remove crankshaft pulley, use special tools (Steering wheel remover, Bearing puller attachment) with it as shown in figure.

   **Special tool**
   **(A): 09944–36011**
   **(B): 09926–58010**

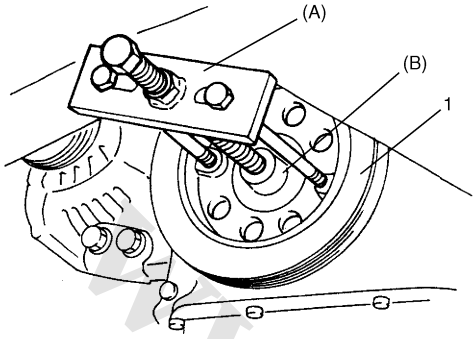


I2RH01140052-01

6) Remove idler pulley (1), water pump pulley (2) and belt tensioner (3).

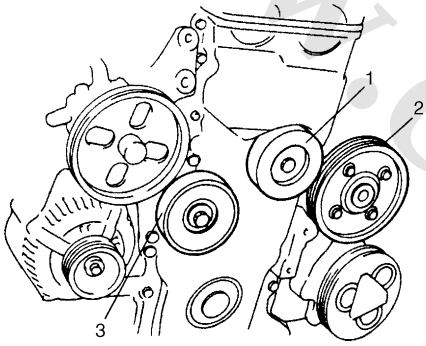


I2RH01140054-01

7) Remove timing chain cover (1) bolts (3) and nut (2).

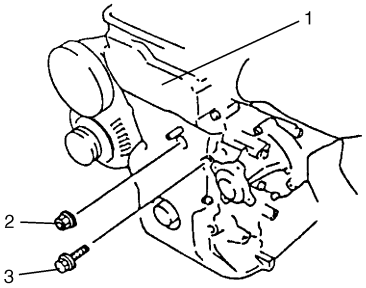


I2RH01140055-01

**Installation**

1) Clean sealing surfaces on timing chain cover, cylinder block and cylinder head.
   Remove oil, oil sealant and dust from sealing surface.
2) Install new oil seal (2) to timing chain cover using special tool, if removed.

**NOTE**

**When installing new oil seal (2), drive it until its surface is flash with edge of timing chain cover (1).**

**Special tool**
**(A): 09913–75510**

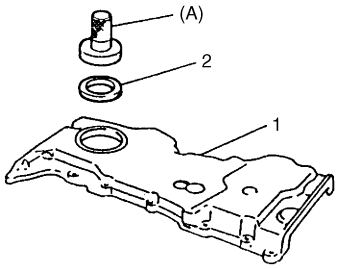


I2RH01140061-01

www.cargeek.ir

 www.CarGeek.ir

3) Apply sealant “A” and “B” to specific area as shown in figure.

**“A”: Water tight sealant 99000–31250 (SUZUKI Bond No.1207F)**
**“B”: Water tight sealant 99000–31140 (SUZUKI Bond No.1207B)**

**Sealant amount for timing chain cover**
**“a”: 3 mm (0.12 in.)**
**“b”: 2 mm (0.08 in.)**
**“c”: 6 mm (0.24 in.)**
**“d”: 16 mm (0.63 in.)**
**“e”: 14 mm (0.55 in.)**
**“f”: 65 mm (2.56 in.)**
**“g”: 73 mm (2.87 in.)**
**“h”: 4 mm (0.16 in.)**

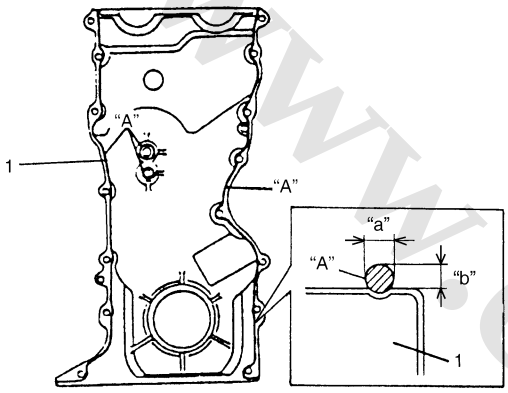


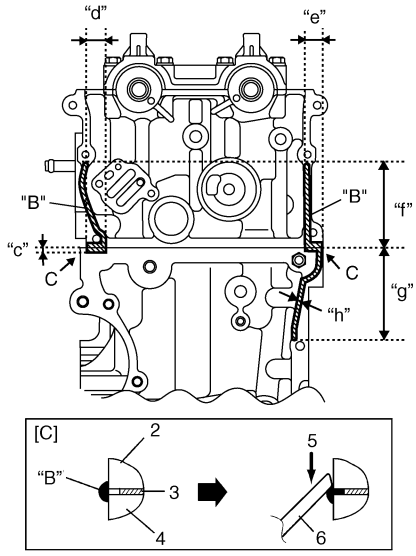


I5JB0A142022-03

| | |
|---|---|
| 2. Cylinder head | 5. Rub into |
| 3. Cylinder head gasket | 6. Jig |
| 4. Cylinder block | [C]: View C |

4) Apply engine oil to oil seal lip, then install timing chain cover (1). Tighten bolts and nut to specified torque.

**NOTE**

**Before installing timing chain cover, check that pin is securely fitted.**

**Tightening torque**
**Timing chain cover bolt and nut (a): 11 N·m (1.1 kgf-m, 8.0 lb-ft)**

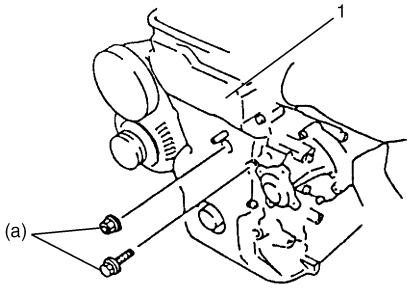


I2RH01140057-01

5) Install belt idler pulley (1). Tighten nut to specified torque.

**Tightening torque**
**Idler pulley nut (a): 42 N·m (4.2 kgf-m, 30.5 lb-ft)**

6) Install belt tensioner (2). Tighten bolts to specified torque.

**Tightening torque**
**Generator belt tensioner bolt (b): 25 N·m (2.5 kgf-m, 18.5 lb-ft)**

7) Install water pump pulley (3).

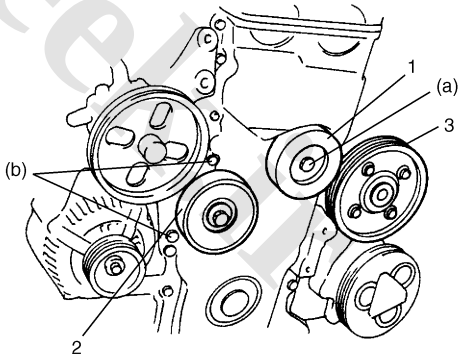


I2RH01140058-01

8) Install cylinder head cover referring to “Cylinder Head Cover Removal and Installation: For J20 Engine”.

9) Install oil pan. Refer to “Oil Pan and Oil Pump Strainer Removal and Installation: For J20 Engine in Section 1E” for installation.

10) Install crankshaft pulley. To lock crankshaft pulley (1), use special tool (camshaft pulley holder) as shown in figure.

**Special tool**
**(A): 09917–68221**

www.cargeek.ir

**NOTE**

**Be sure to use the following bolts instead of pins in order to fix crank pulley by special tool.**
**Bolt size: M8, P1.25 L = 25 mm (0.98 in.)**
**Strength: 7T**

**Tightening torque**
**Crankshaft pulley bolt (a): 150 N·m (15.0 kgf-m, 108.5 lb-ft)**

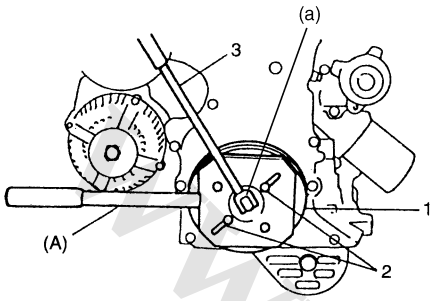


I2RH01140060-01

| | |
|---|---|
| 2. Bolt | 3. Wrench |

11) Install engine assembly to vehicle referring to "Engine Assembly Removal and Installation: For J20 Engine".

## Timing Chain Cover Cleaning and Inspection

S5JB0A1426022

### Clean

Clean sealing surface on timing chain cover, crank case, cylinder block and cylinder head.
Remove oil, old sealant, and dust from sealing surface.

### Inspection

Check oil seal lip for fault or other damage. Replace as necessary.

## 2nd Timing Chain and Chain Tensioner Components

S5JB0A1426023

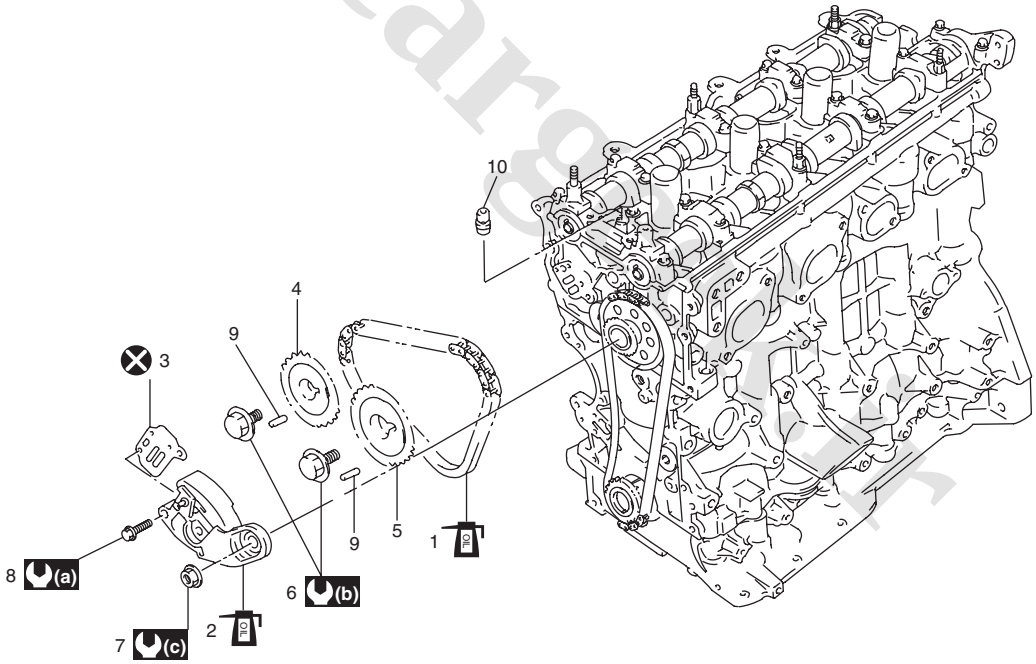


I5JB0A142023-02

| | | |
|---|---|---|
| 1. 2nd timing chain : Apply engine oil | 6. Camshaft timing sprocket bolt | (a) : 11 N·m (1.1 kgf-m, 8.0 lb-ft) |
| 2. Timing chain tensioner adjuster No.2 : Apply engine oil to sliding surface. | 7. Timing chain tensioner adjuster No.2 nut | (b) : 80 N·m (8.0 kgf-m, 58.0 lb-ft) |
| 3. Tensioner adjuster No.2 gasket | 8. Timing chain tensioner adjuster No.2 bolt | (c) : 45 N·m (4.5 kgf-m, 32.5 lb-ft) |
| 4. Intake camshaft timing sprocket | 9. Pin | ⊗ : Do not reuse. |
| 5. Exhaust camshaft timing sprocket | 10. Oil relief valve | |

 www.CarGeek.ir

## 2nd Timing Chain and Chain Tensioner Removal and Installation

S5JB0A1426024

**⚠ CAUTION**

**After 2nd timing chain is removed, never turn intake camshaft, exhaust camshaft and crankshaft independently more than such an extent as shown. If turned, interference may occur between piston and valves and valves themselves, and parts related to piston and valves may be damaged.**

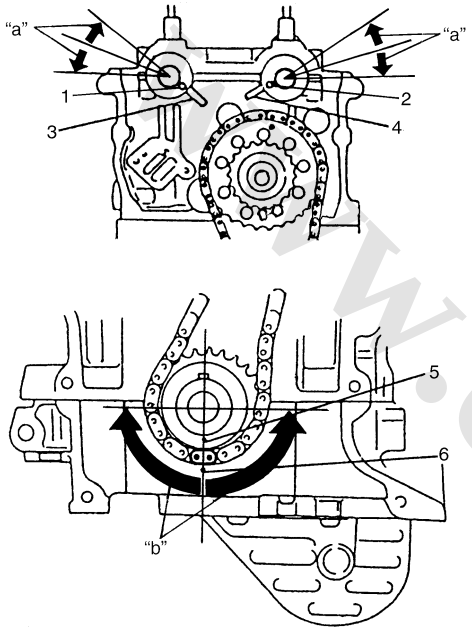


I5JB0A142060-01

| | |
|---|---|
| 1. | Knock pin of intake camshaft |
| 2. | Knock pin of exhaust camshaft |
| 3. | Timing mark of intake side |
| 4. | Timing mark of exhaust side |
| 5. | Match mark on crank timing sprocket |
| 6. | Timing mark on lower crankcase |
| "a": | Camshafts (IN & EX) allowable turning range..... Within 20° on both right and left |
| "b": | Crankshaft allowable turning range..... Within 90° on both right and left |

### Removal

1) Remove engine assembly from vehicle referring to "Engine Assembly Removal and Installation: For J20 Engine".
2) Remove oil pan. Refer to "Oil Pan and Oil Pump Strainer Removal and Installation: For J20 Engine in Section 1E" for removal.
3) Remove cylinder head cover. Refer to "Cylinder Head Cover Removal and Installation: For J20 Engine" for removal.
4) Remove timing chain cover. Refer to "Timing Chain Cover Removal and Installation: For J20 Engine" for removal.
5) Turn crankshaft clockwise to meet the following conditions.
   - Key on crankshaft match with mark on cylinder block (I).
   - Arrow mark on idler sprocket points upward (II).
   - Marks on cam sprockets match with marks on cylinder head (III).
   - Mark on crank sprocket match with mark on lower crankcase (IV).

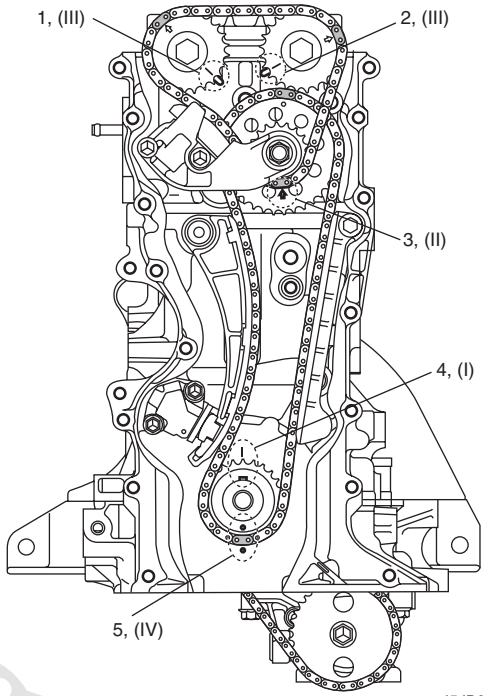


I5JB0A142024-01

| | |
|---|---|
| 1. | Timing marks of intake camshaft timing sprocket |
| 2. | Timing marks of exhaust camshaft timing sprocket |
| 3. | Arrow mark on idler sprocket |
| 4. | Key on crankshaft |
| 5. | Timing mark of crankshaft timing sprocket |

6) Remove timing chain tensioner adjuster No.2 (1) and gasket. To remove them, slacken 2nd timing chain by turning intake camshaft counterclockwise a little while pushing back pad.

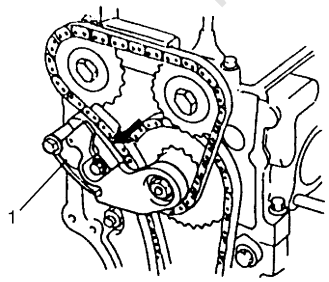


I2RH01140064-01

www.cargeek.ir

7) Remove intake and exhaust camshaft timing sprocket bolts (1). To remove them, fit a spanner (4) to hexagonal part (3) at the center of camshaft to hold it stationary.
8) Remove camshaft timing sprockets and 2nd timing chain (2).

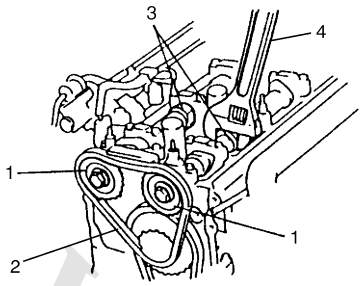


I5JB0A142025-01

**Installation**

1) Check that match mark (1) on crank timing sprocket is in match with timing mark (2) on lower crankcase as shown in figure.

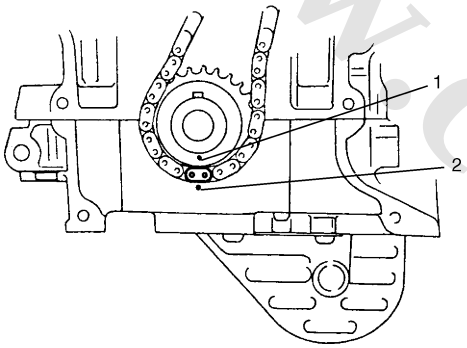


I2RH01140067-01

2) Check that arrow mark (1) on idler sprocket faces upward as shown in figure.
3) Check that knock pins of intake (2) and exhaust (3) camshafts are aligned with timing marks on cylinder head as shown in figure.

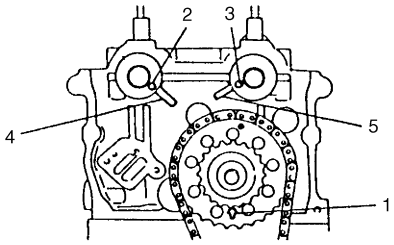


I2RH01140068-01

| | |
|---|---|
| 4. | Timing mark of intake side |
| 5. | Timing mark of exhaust side |

4) Install 2nd timing chain by aligning yellow plate (1) of 2nd timing chain and match marks on idler sprocket.

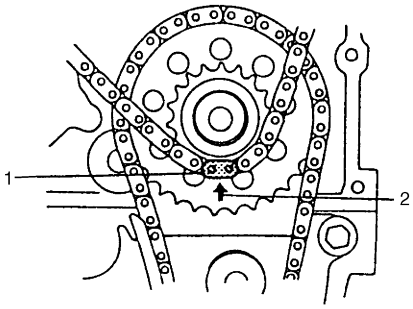


I2RH01140069-01

| | |
|---|---|
| 2. | Match mark of 2nd timing chain (Arrow mark) |

5) Install sprockets to intake and exhaust camshafts by aligning dark blue plate of 2nd timing chain, match marks on intake sprocket and exhaust sprocket respectively.

**⚠ CAUTION**

**Do not turn more than allowable turning range.**
**If turned excessively, valve and piston may be damaged.**

**NOTE**

**As an arrow mark is provided on both sides, camshaft timing sprocket has no specific installation direction.**

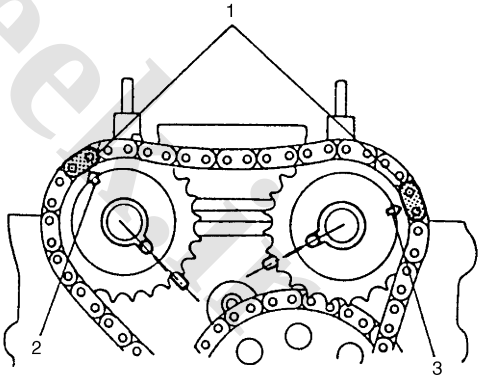


I2RH01140070-01

| | |
|---|---|
| 1. | Dark blue |
| 2. | Arrow mark on intake camshaft timing sprocket |
| 3. | Arrow mark on exhaust camshaft timing sprocket |

www.cargeek.ir

 www.CarGeek.ir

6) Tighten intake and exhaust camshaft timing sprocket bolts (1) to specified torque. To tighten it, fit a spanner (2) to hexagonal part (3) at the center of camshaft to hold it stationary.

**Tightening torque**
**Camshaft timing sprocket bolt (a): 80 N·m (8.0 kgf-m, 57.5 lb-ft)**

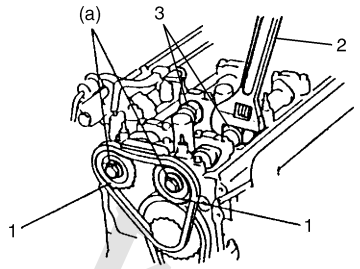


I5JB0A142061-01

7) Push back plunger (1) into tensioner body (2), and hold it at the position by inserting stopper (3) into body.

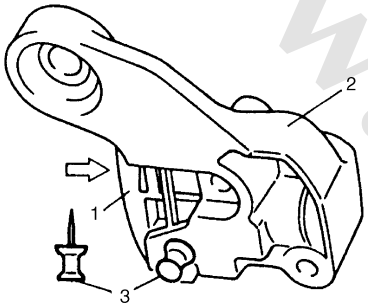


I2RH01140072-01

8) Install timing chain tensioner adjuster No.2 (1) with new gasket.

**Tightening torque**
**Timing chain tensioner adjuster No.2 bolt (a): 11 N·m (1.1 kgf-m, 8.0 lb-ft)**
**Timing chain tensioner adjuster No.2 nut (b): 45 N·m (4.5 kgf-m, 33.0 lb-ft)**

9) Pull out stopper (2) from timing chain tensioner adjuster No.2.

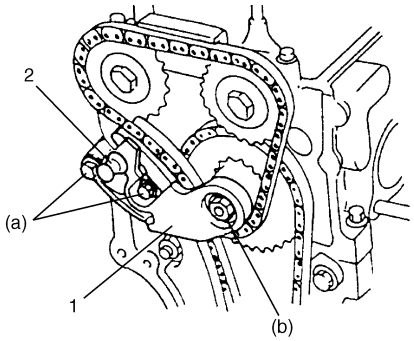


I2RH01140073-01

10) Turn crankshaft two rotations clockwise, and then align timing mark (1) on crankshaft and timing mark (2) on cylinder block as shown in figure.

At this time, check timing marks (3, 5 and 7) of sprockets are in match with timing marks (4, 6 and 8) of cylinder head, cylinder block and lower crank case. Also, check arrow mark (9) on idler sprocket faces upward as shown in figure.

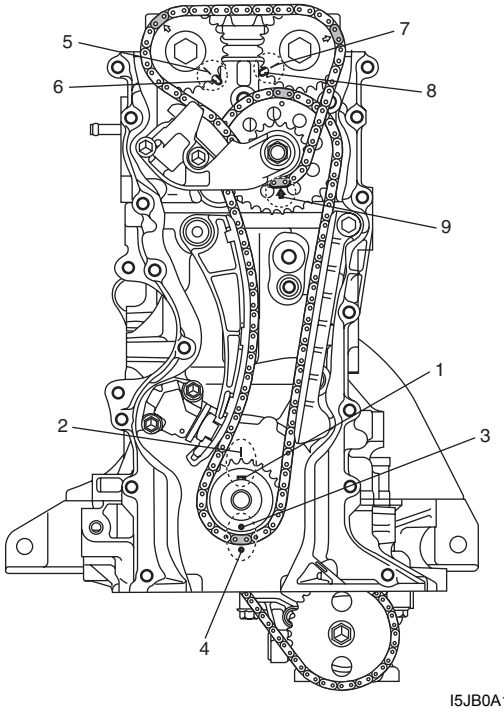


I5JB0A142026-01

| | |
|---|---|
| 3. | Timing mark on crank timing sprocket |
| 4. | Timing mark on lower crankcase |
| 5. | Timing mark on intake camshaft timing sprocket |
| 6. | Timing mark of intake camshaft timing sprocket |
| 7. | Timing mark on exhaust camshaft timing sprocket |
| 8. | Timing mark of exhaust camshaft timing sprocket |
| 9. | Arrow mark on idler sprocket point upward |

11) Apply oil to timing chains, tensioner, tensioner adjusters, sprockets and guides.
12) Install timing chain cover. Refer to “Timing Chain Cover Removal and Installation: For J20 Engine” for installation.
13) Install cylinder head cover. Refer to “Cylinder Head Cover Removal and Installation: For J20 Engine” for installation.
14) Install oil pan. Refer to “Oil Pan and Oil Pump Strainer Removal and Installation: For J20 Engine in Section 1E” for installation.
15) Install engine assembly to vehicle referring to “Engine Assembly Removal and Installation: For J20 Engine”.

## 2nd Timing Chain and Chain Tensioner Inspection

S5JB0A1426025

**Timing Chain Guide No.2**
Check shoe (2) for wear or damage.

www.cargeek.ir

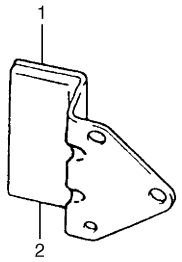


I2RH01140075-01

| |
|---|
| 1. Timing chain guide No.2 |

### Camshaft Sprocket

Check teeth of sprocket for wear or damage.

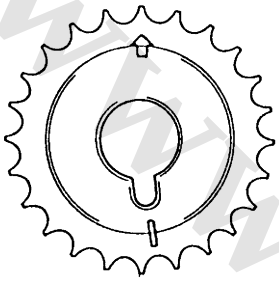

I2RH01140076-01

### Timing Chain

Check timing chain for wear or damage.

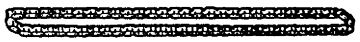

I2RH01140077-01

### Tensioner Adjuster No.2

Check shoe (1) for wear or damage and latch functions properly.

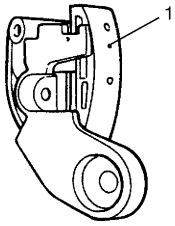


I2RH01140078-01

## 1st Timing Chain and Chain Tensioner Components

S5JB0A1426026

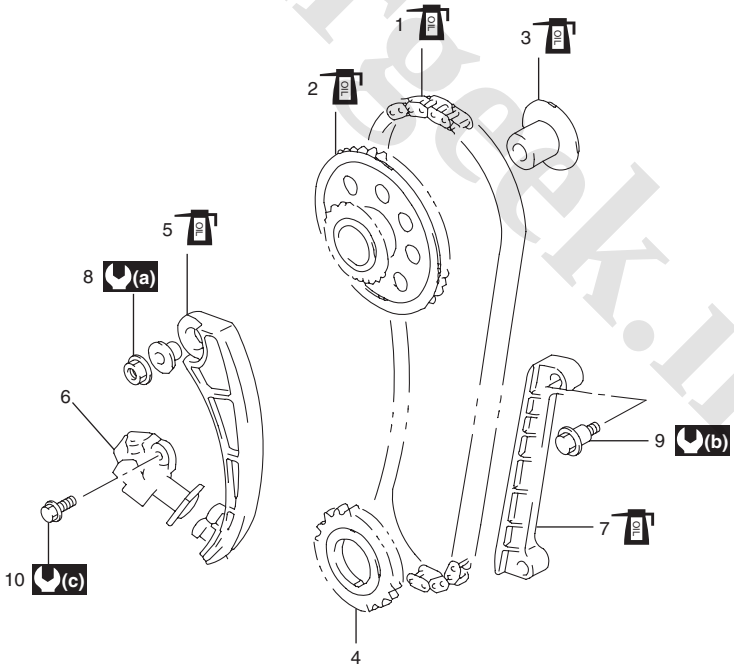


I5JB0A142027-01

| | | |
|---|---|---|
| 1. 1st timing chain | 6. Timing chain tensioner adjuster No.1 | (a) : 25 N·m (2.5 kgf-m, 18.0 lb-ft) |
| 2. Idler sprocket | 7. Timing chain guide No.1 | (b) : 9 N·m (0.9 kgf-m, 6.5 lb-ft) |
| 3. Idler sprocket shaft | 8. Timing chain tensioner nut | (c) : 11 N·m (1.1 kgf-m, 8.0 lb-ft) |
| 4. Crankshaft timing sprocket | 9. Timing chain guide No.1 bolt | OIL : Apply engine oil to sliding surface. |
| 5. Timing chain tensioner | 10. Timing chain tensioner adjuster No.1 bolt | |

www.cargeek.ir

 www.CarGeek.ir

## 1st Timing Chain and Chain Tensioner Removal and Installation

S5JB0A1426027

**⚠ CAUTION**

**After timing chain is removed, never turn crankshaft and camshafts independently more than its allowable turning range described referring to "2nd Timing Chain and Chain Tensioner Removal and Installation: For J20 Engine".**
**If turned, interference may occur between piston and valves and valves themselves, and parts related to piston and valves may be damaged.**

### Removal

1) Remove 2nd timing chain. Refer to "2nd Timing Chain and Chain Tensioner Removal and Installation: For J20 Engine" for removal.
2) Remove timing chain guide No.1 (1).
3) Remove timing chain tensioner adjuster No.1 (2).
4) Remove timing chain tensioner (3).
5) Remove idler sprocket (4) and 1st timing chain (5).
6) Remove crankshaft timing sprocket (6).

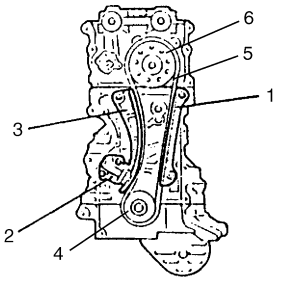


I4RH01140029-01

### Installation

1) Install crankshaft timing sprocket (2) as shown in figure.

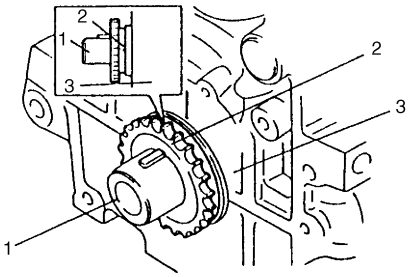


I2RH01140083-01

| | |
|---|---|
| 1. Crankshaft | 3. Cylinder block |

2) Check that match mark (1) on crankshaft timing sprocket is in match with timing mark (2) on lower crankcase.

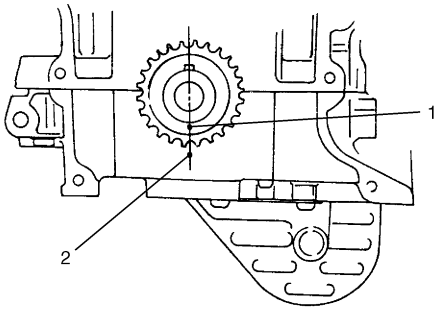


I2RH01140082-01

3) Apply oil to bush of idler sprocket (1).
4) Install idler sprocket and sprocket shaft.
5) Install 1st timing chain by aligning dark blue plate (4) of 1st timing chain (3) and match mark (2) on idler sprocket (1).

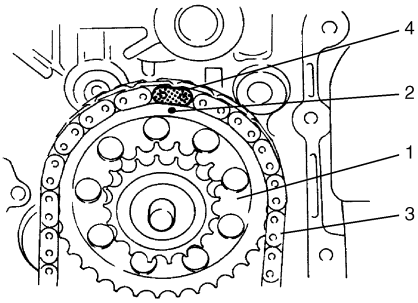


I2RH01140084-01

6) Bring gold plate (4) of 1st timing chain (3) into match with match mark (2) on crankshaft timing sprocket (1).

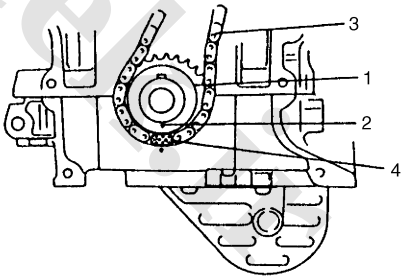


I2RH01140085-01

7) Apply engine oil to sliding surface of timing chain tensioner (1) and then install it as shown in figure. Tighten tensioner nut to specified torque.

**Tightening torque**
**Timing chain tensioner nut (a): 25 N·m (2.5 kgf-m, 18.0 lb-ft)**

www.cargeek.ir

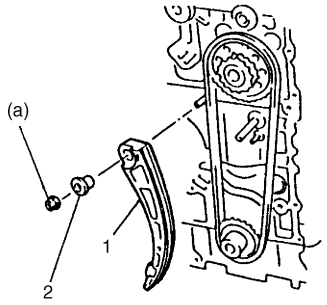


I2RH01140086-01

| |
|---|
| 2. Spacer |

8) With latch of tensioner adjuster No.1 returned and plunger (1) pushed back into body, insert stopper (4) into latch (2) and body (3).
After inserting it, check to make sure that plunger will not come out.

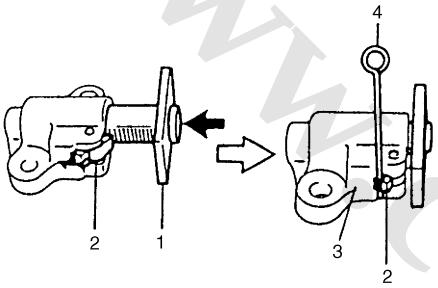


I2RH01140087-01

9) Install timing chain tensioner (2) adjuster No.1 (1).

**Tightening torque**
**Timing chain tensioner adjuster No.1 bolt (a): 11 N·m (1.1 kgf-m, 8.0 lb-ft)**

10) Pull out stopper (3) from adjuster No.1.

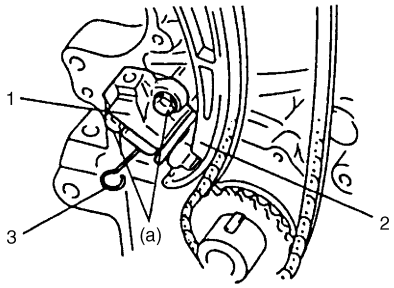


I2RH01140088-01

11) Apply engine oil to sliding surface of timing chain guide No.1 (1) and then install it.
Tighten guide bolts to specified torque.

**Tightening torque**
**Timing chain guide No.1 bolt (a): 9 N·m (0.9 kgf-m, 6.5 lb-ft)**

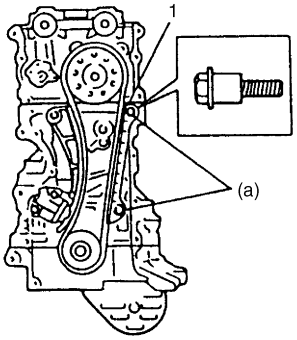


I2RH01140089-01

12) Check that dark blue and yellow plates of 1st timing chain are in match with match marks on sprockets respectively.

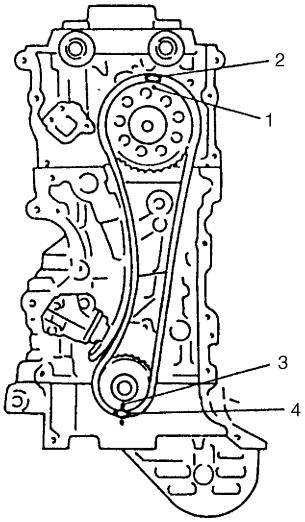


I2RH01140090-01

| |
|---|
| 1. Match mark on idler sprocket |
| 2. Dark blue plate |
| 3. Match mark on crank timing sprocket |
| 4. Yellow plate |

13) Install 2nd timing chain. Refer to “2nd Timing Chain and Chain Tensioner Removal and Installation: For J20 Engine” for installation.
14) Install timing chain cover. Refer to “Timing Chain Cover Removal and Installation: For J20 Engine” for installation.
15) Install cylinder head cover. Refer to “Cylinder Head Cover Removal and Installation: For J20 Engine” for installation.
16) Install oil pan. Refer to “Oil Pan and Oil Pump Strainer Removal and Installation: For J20 Engine in Section 1E” for installation.
17) Install engine assembly to vehicle referring to “Engine Assembly Removal and Installation: For J20 Engine”.

www.cargeek.ir

 www.CarGeek.ir

## 1st Timing Chain and Chain Tensioner Inspection

S5JB0A1426028

### Timing Chain Guide No.1

Check shoe for wear or damage.

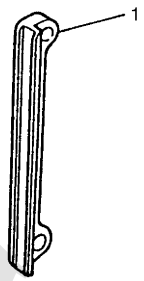


I2RH01140091-01

| |
|---|
| 1. Timing chain guide No.1 |

### Timing Chain Tensioner

Check shoe (1) for wear or damage.

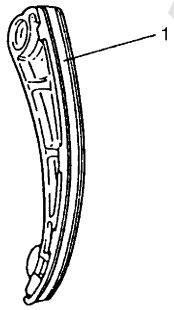


I2RH01140092-01

### Crankshaft Timing Sprocket

Check teeth of sprocket for wear or damage.

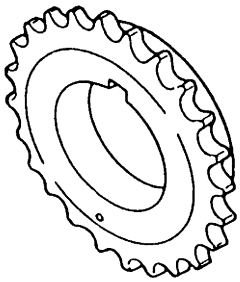

I2RH01140093-01

### Idler Sprocket

Check teeth and bush (1) of sprocket for wear or damage.

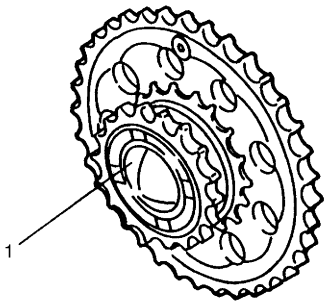


I2RH01140094-01

### 1st Timing Chain

Check timing chain for wear or damage.

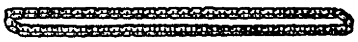

I2RH01140077-01

### Timing Chain Tensioner Adjuster No.1

Check that latch (1) and tooth surface (2) are free from damage and latch functions properly.

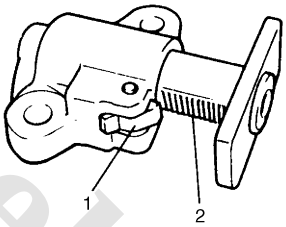


I2RH01140095-01

www.cargeek.ir

## Camshafts, Tappet and Shim Components

S5JB0A1426029

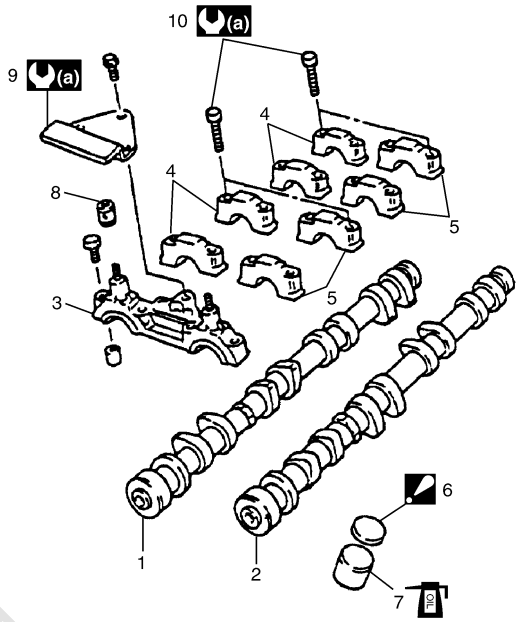


I5JB0A142028-01

| | | |
|---|---|---|
| 1. Intake camshaft | 5. Exhaust camshaft housing | 9. Timing chain guide No.2 |
| 2. Exhaust camshaft | 6. Shim<br>: Direct shim No. side toward tappet. | 10. Camshaft housing bolt |
| 3. Camshaft housing | 7. Tappet | (a) : 11 N·m (1.1 kgf-m, 8.0 lb-ft) |
| 4. Intake camshaft housing | 8. Oil relief valve | : Apply engine oil to sliding surface of each part. |

## Camshafts, Tappet and Shim Removal and Installation

S5JB0A1426030

**⚠ CAUTION**

- **Keep working table, tools and hands clean while overhauling.**
- **Use special care to handle aluminum parts so as not to damage them.**
- **Do not expose removed parts to dust. Keep them always clean.**

### Removal

1) Remove 2nd timing chain. Refer to “2nd Timing Chain and Chain Tensioner Removal and Installation: For J20 Engine” for removal.
2) Loosen camshaft housing bolts in such order as indicated in figure and remove them.

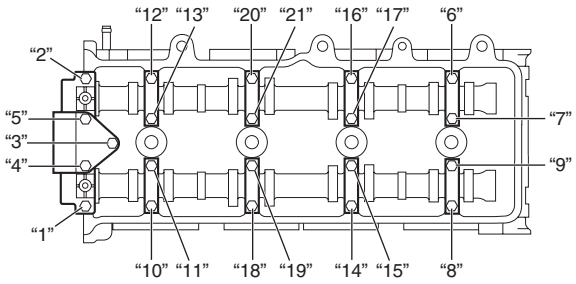


I5JB0A142029-01

3) Remove camshaft housings.
4) Remove camshafts.
5) Remove tappets with shims.

### Installation

1) Apply engine oil around tappet (1), and then install tappets with shims to cylinder head.

**NOTE**

**When installing shim, make sure to direct shim No. side toward tappet.**

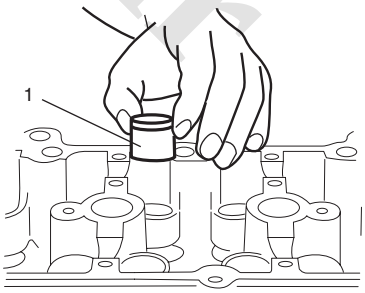


I5JB0A142030-01

www.cargeek.ir

 www.CarGeek.ir

2) Match match mark (1) on crank timing sprocket and mating surface of cylinder block and lower crankcase (2).

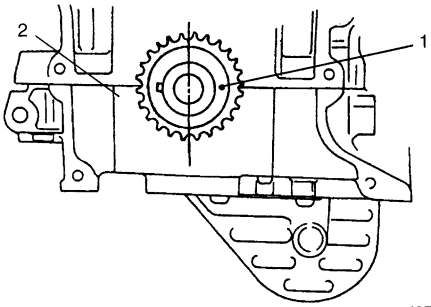


I2RH01140103-01

3) Install camshafts.
Apply oil to sliding surface of each camshaft and camshaft journal then install them by aligning match marks on cylinder head and camshafts as shown in figure.

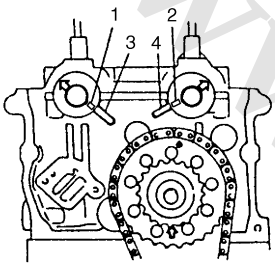


I5JB0A142031-01

| | |
|---|---|
| 1. | Knock pin of intake camshaft |
| 2. | Knock pin of exhaust camshaft |
| 3. | Match mark of intake camshaft |
| 4. | Match mark of exhaust camshaft |

4) Install camshaft housing pins (3) as shown in figure.

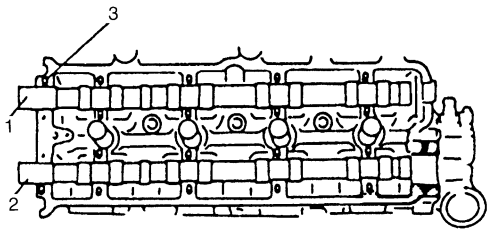


I4RH01140032-01

| | |
|---|---|
| 1. Intake camshaft | 2. Exhaust camshaft |

5) Check position of camshaft housings.
Embossed marks are provided on each camshaft housing, indicating position and direction for installation. Install housings as indicated by these marks.

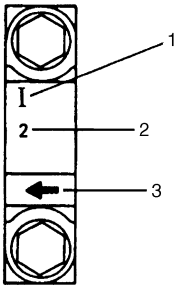


I2RH01140106-01

| | |
|---|---|
| 1. | I: Intake side or E: Exhaust side |
| 2. | Position from timing chain side |
| 3. | Pointing to timing chain side |

6) After applying oil to housing bolts, tighten them temporarily first. Then tighten them by following numerical order in figure.
Tighten a little at a time and evenly among bolts and repeat tightening sequence two or three times before they are tightened to specified torque.

**Tightening torque**
**Camshaft housing bolt (a): 11 N·m (1.1 kgf-m, 8.0 lb-ft)**

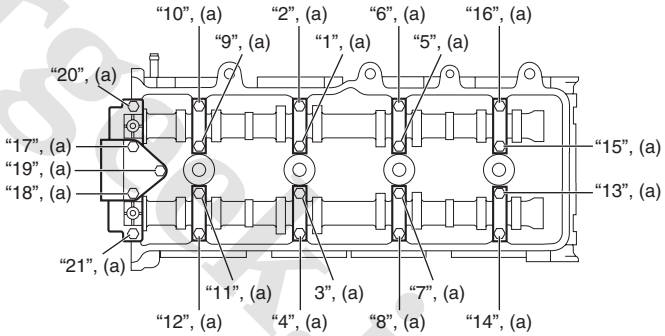


I5JB0A142032-01

7) Turn crankshaft clockwise then align crankshaft timing sprocket key (1) with timing mark (2).

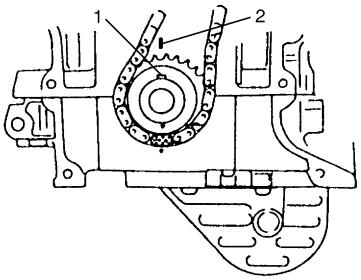


I5JB0A142033-01

8) Install 2nd timing chain. Refer to "2nd Timing Chain and Chain Tensioner Removal and Installation: For J20 Engine" for installation.

www.cargeek.ir

9) Install timing chain cover. Refer to “Timing Chain Cover Removal and Installation: For J20 Engine” for installation.
10) Install cylinder head cover. Refer to “Cylinder Head Cover Removal and Installation: For J20 Engine” for installation.
11) Install oil pan. Refer to “Oil Pan and Oil Pump Strainer Removal and Installation: For J20 Engine in Section 1E” for installation.
12) Install engine assembly to vehicle referring to “Engine Assembly Removal and Installation: For J20 Engine”.
13) Check valve lashes referring to “Valve Lash (Clearance) Inspection: For J20 Engine”.

## Camshaft, Tappet and Shim Inspection

S5JB0A1426031

### Cam Wear

Using a micrometer, measure cam height. If measured height is below its limit, replace camshaft.

**Cam height “a”**

| Cam height | Standard | Limit |
|---|---|---|
| Intake cam | 45.669 – 45.829 mm (1.798 – 1.8043 in.) | 45.550 mm (1.793 in.) |
| Exhaust cam | 45.550 – 45.710 mm (1.7933 – 1.7996 in.) | 45.430 mm (1.789 in.) |

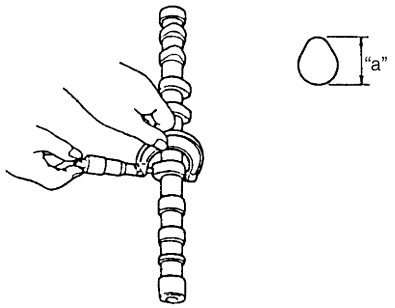


I5JB0A142034-01

### Camshaft Runout

Set camshaft between two “V” blocks, and measure its runout by using a dial gauge.
If measured runout exceeds the specified limit, replace camshaft.

**Runout limit**
**0.03 mm (0.0012 in.)**

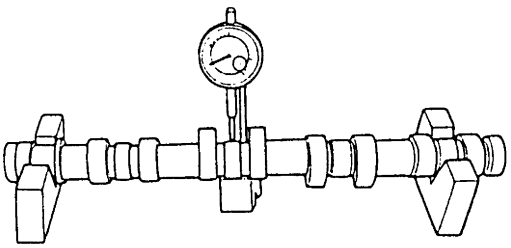

I2RH01140109-01

### Camshaft Journal Wear

Check camshaft journals and camshaft housings for pitting, scratches, wear or damage.
If any malcondition is found, replace camshaft or cylinder head with housing. Never replace cylinder head without replacing housings.

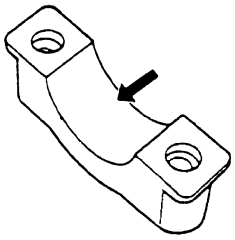

IYSQ01143105-01

Check clearance by using gauging plastic. Checking procedure is as follows.

1) Clean housings and camshaft journals.
2) Make sure that all tappets with shims are removed and install camshafts to cylinder head.
3) Place a piece of gauging plastic to full width of journal of camshaft (parallel to camshaft).
4) Install camshaft housing.
5) Tighten camshaft housing bolts in such order as indicated in figure a little at a time till they are tightened to specified torque.

**NOTE**

**Do not rotate camshaft while gauging plastic is installed.**

**Tightening torque**
**Camshaft housing bolt (a): 11 N·m (1.1 kgf-m, 8.0 lb-ft)**

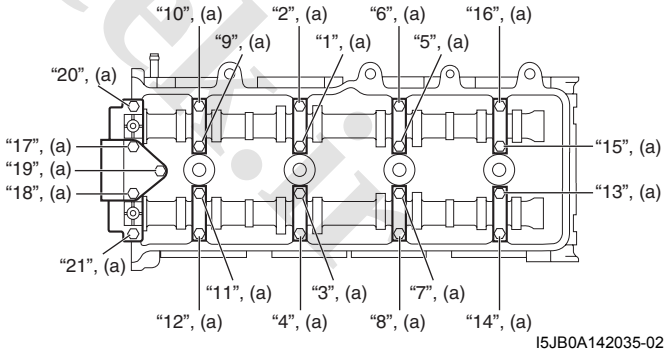


I5JB0A142035-02

 www.CarGeek.ir

6) Remove housing, and using scale (2) on gauging plastic envelop (1), measure gauging plastic width at its widest point.

**Journal clearance**

| Standard | Limit |
|---|---|
| 0.020 – 0.074 mm (0.0008 – 0.0029 in.) | 0.12 mm (0.0047 in.) |

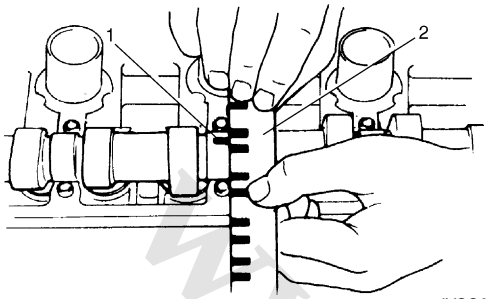


IYSQ01143107-01

If measured camshaft journal clearance exceeds limit, measure journal (housing) bore and outside diameter of camshaft journal. Replace camshaft or cylinder head assembly whichever the difference from specification is greater.

**Camshaft journal**

| Item | Standard |
|---|---|
| Camshaft journal bore diameter. (IN & EX) [A] | 26.000 – 26.033 mm (1.0236 – 1.0249 in.) |
| Camshaft journal O.D. (IN & EX) [B] | 25.959 – 25.980 mm (1.0221 – 1.0228 in.) |

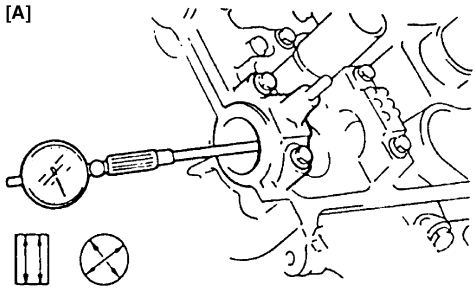


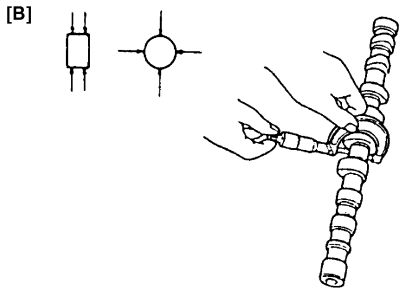


I5JB0A142036-01

**Wear of Tappet and Shim**

Check tappet and shim for pitting, scratches, or damage. If any malcondition is found, replace.

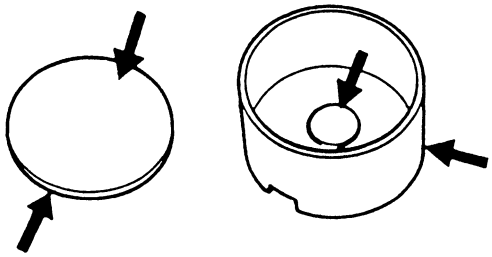

I2RH0B140085-01

Measure cylinder head bore and tappet outside diameter to determine cylinder head-to-tappet clearance. If clearance exceeds limit, replace tappet or cylinder head.

**Cylinder head bore and tappet outside diameter**

| Item | Standard | Limit |
|---|---|---|
| Tappet outside diameter [A] | 32.456 – 32.472 mm (1.2778 – 1.2784 in.) | — |
| Cylinder head bore [B] | 32.500 – 32.525 mm (1.2795 – 1.2805 in.) | — |
| Cylinder head to tappet clearance | 0.028 – 0.069 mm (0.0011 – 0.0027 in.) | 0.15 mm (0.0059 in.) |

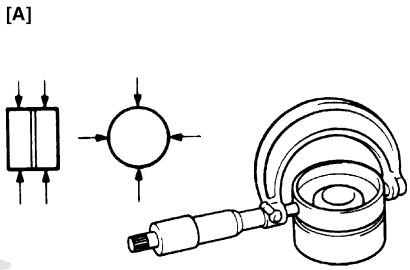


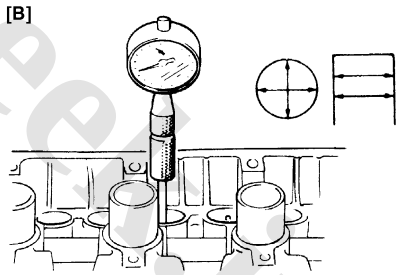


I5JB0A142038-01

**Oil Relief Valve**

Check oil relief valve for clogging and ball for being stuck.

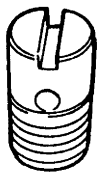

I2RH01140111-01

www.cargeek.ir

## Valves and Cylinder Head Components

S5JB0A1426032

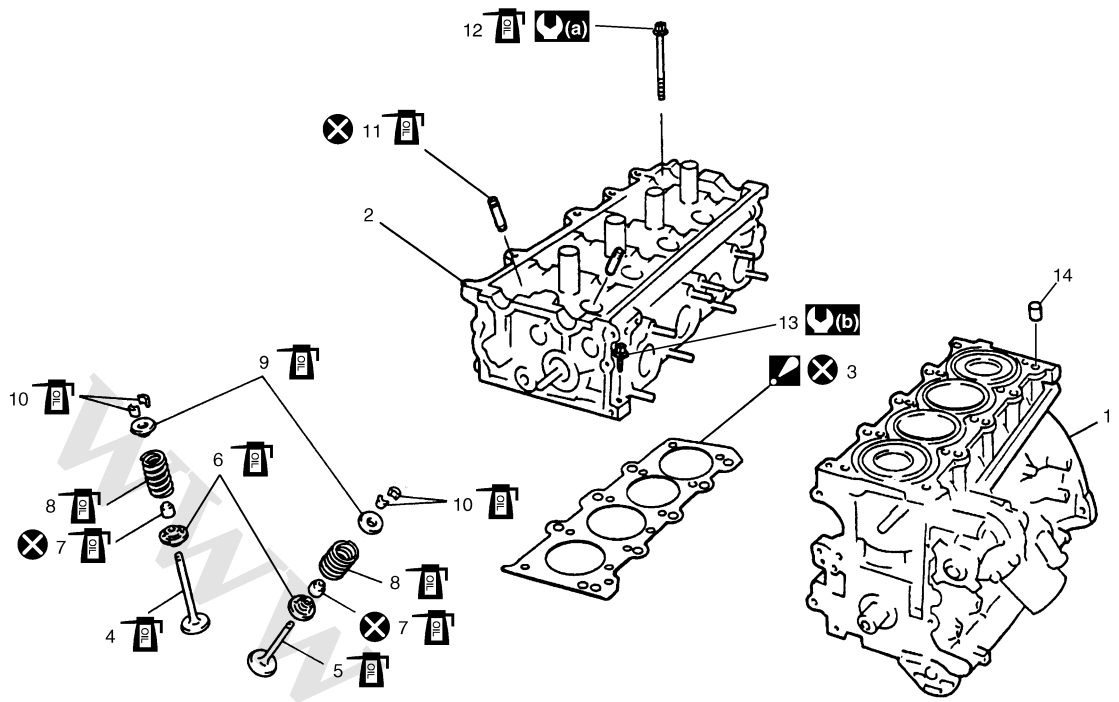


I5JB0A142039-01

| | | |
|---|---|---|
| 1. Cylinder block | 7. Valve stem seal | 13. Cylinder head bolt (M6)<br>: Be sure to tighten cylinder head bolt (M8) after securing cylinder head bolt (M10). |
| 2. Cylinder head | 8. Valve spring | 14. Knock pin |
| 3. Cylinder head gasket<br>: Identification number provided on gasket comes to crankshaft pully side, facing up. | 9. Valve spring retainer | (a) : Tighten 52 N·m (5.2 kgf-m, 38.0 lb-ft), 82 N·m (8.2 kgf-m, 59.5 lb-ft), 0 N·m (0 kgf-m, 0 lb-ft), 52 N·m (5.2 kgf-m, 38.0 lb-ft) and 103 N·m (10.3 kgf-m, 74.5 lb-ft) by the specified procedure. |
| 4. Intake valve | 10. Valve cotter | (b) : 11 N·m (1.1 kgf-m, 8.0 lb-ft) |
| 5. Exhaust valve | 11. Valve guide | : Do not reuse. |
| 6. Valve spring seat | 12. Cylinder head bolt (M10) | : Apply engine oil to sliding surface of each part. |

## Valves and Cylinder Head Removal and Installation

S5JB0A1426033

### Removal

1) Remove engine assembly from vehicle referring to “Engine Assembly Removal and Installation: For J20 Engine”.
2) Remove oil pan referring to “Oil Pan and Oil Pump Strainer Removal and Installation: For J20 Engine in Section 1E”.
3) Remove cylinder head cover referring to “Cylinder Head Cover Removal and Installation: For J20 Engine”.
4) Remove timing chain cover. Refer to “Timing Chain Cover Removal and Installation: For J20 Engine” for removal.
5) Remove 2nd timing chain and 1st timing chain. Refer to “2nd Timing Chain and Chain Tensioner Removal and Installation: For J20 Engine” and “1st Timing Chain and Chain Tensioner Removal and Installation: For J20 Engine” for removal.
6) Remove camshafts, tappets and shims. Refer to “Camshafts, Tappet and Shim Removal and Installation: For J20 Engine” for removal.

www.cargeek.ir

 www.CarGeek.ir

7) Loosen cylinder head bolts (M10) in such order as numbered in figure and remove them.

**NOTE**

**Don't forget to remove cylinder head bolt (M6) (3) as shown in figure.**

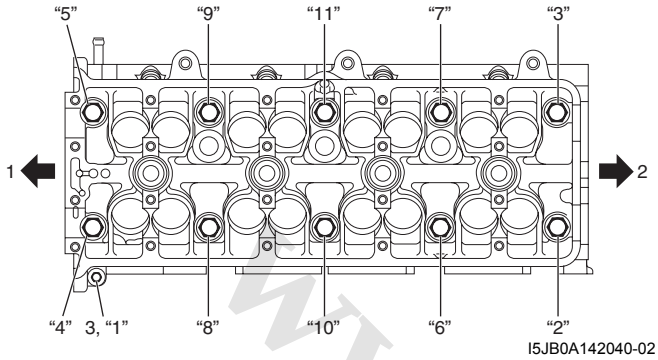


| | |
|---|---|
| 1. Crankshaft pulley side | 2. Flywheel side |

8) Check all around cylinder head for any other parts required to be removed or disconnected and remove or disconnect whatever necessary.

9) Remove cylinder head with intake manifold, exhaust manifold and water outlet cap. Use lifting device, if necessary.

## Installation

1) Match match mark (1) on crank timing sprocket and mating surface (2) of cylinder block and lower crankcase.

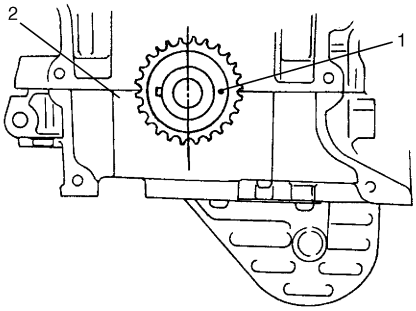


2) Clean mating surface of cylinder head and cylinder block (2). Remove oil, old gasket and dust from mating surface.

3) Install knock pins (3) to cylinder block.

4) Install new cylinder head gasket (1) to cylinder block. Identification number (6) provided on gasket comes to crankshaft pulley side (4), facing up (toward cylinder head side).

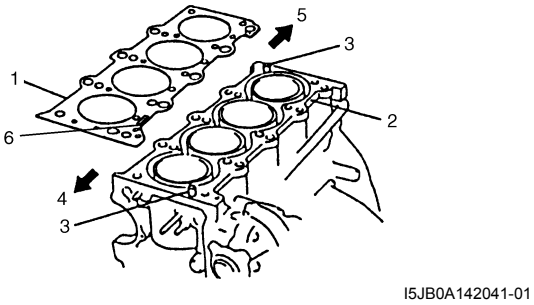


| |
|---|
| 5. Flywheel side |

5) Install cylinder head to cylinder block.
Apply engine oil to cylinder head bolts and tighten them gradually as follows.

a) Tighten cylinder head bolts (M10) to 52 N·m (5.2 kgf-m, 38.0 lb-ft) according to numerical order in figure.

b) In the same manner as in step a), retighten cylinder head bolts (M10) to 82 N·m (8.2 kgf-m, 59.5 lb-ft).

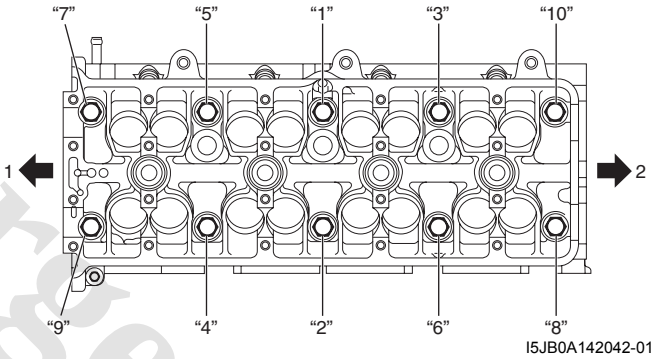


| | |
|---|---|
| 1. Crankshaft pulley side | 2. Flywheel side |

c) Loosen cylinder head bolts (M10) until tightening torque is reduced to 0 according to numerical order in figure.

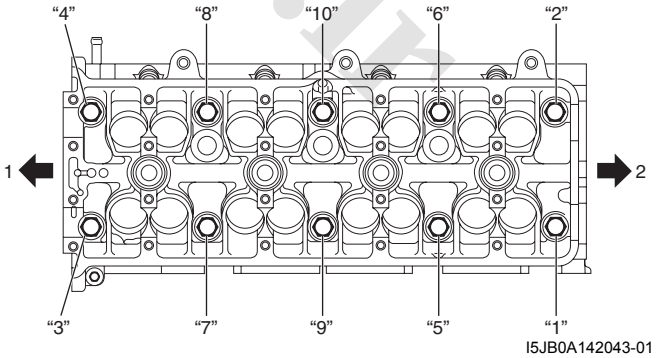


| | |
|---|---|
| 1. Crankshaft pulley side | 2. Flywheel side |

www.cargeek.ir

d) Tighten cylinder head bolts (M10) to 52 N·m (5.2 kgf-m, 38.0 lb-ft) according to numerical order in figure.

e) In the same manner as in step b), retighten cylinder head bolts (M10) to 103 N·m (10.3 kgf-m, 74.5 lb-ft).

f) Tighten cylinder head bolt (M6) to specified torque.

**Tightening torque**
**Cylinder head bolt (M10) (a): Tighten 52 N·m (5.2 kgf-m, 38.0 lb-ft), 82 N·m (8.2 kgf-m, 59.5 lb-ft), 0 N·m (0 kgf-m, 0 lb-ft), 52 N·m (5.2 kgf-m, 38.0 lb-ft) and 103 N·m (10.3 kgf-m, 74.5 lb-ft) by the specified procedure.**
**Cylinder head bolt (M6) (b): 11 N·m (1.1 kgf-m, 8.0 lb-ft)**

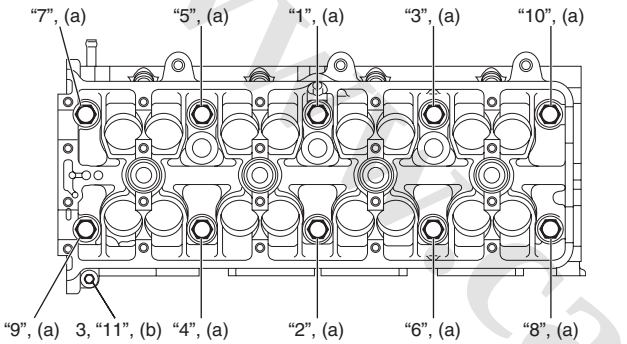

I5JB0A142044-02

| | |
|---|---|
| 1. Crankshaft pulley side | 2. Flywheel side |

6) Install camshafts and tappets and shims. Refer to "Camshafts, Tappet and Shim Removal and Installation: For J20 Engine" for installation.

7) Install 1st timing chain. Refer to "1st Timing Chain and Chain Tensioner Removal and Installation: For J20 Engine" for installation.

8) Install 2nd timing chain. Refer to "2nd Timing Chain and Chain Tensioner Removal and Installation: For J20 Engine" for installation.

9) Install timing chain cover. Refer to "Timing Chain Cover Removal and Installation: For J20 Engine" for installation.

10) Check intake and exhaust valve lashes referring to "Valve Lash (Clearance) Inspection: For J20 Engine".

11) Install cylinder head cover referring to "Cylinder Head Cover Removal and Installation: For J20 Engine".

12) Install oil pan referring to "Oil Pan and Oil Pump Strainer Removal and Installation: For J20 Engine in Section 1E".

13) Install engine assembly to vehicle referring to "Engine Assembly Removal and Installation: For J20 Engine".

## Valves and Cylinder Head Disassembly and Assembly

S5JB0A1426034

### Disassembly

1) When servicing cylinder head, remove intake manifold, injectors, exhaust manifold and water outlet cap from cylinder head.

2) Using special tools, compress valve springs and then remove valve cotters (1) also by using special tool.

**Special tool**
**(A): 09916–14510**
**(B): 09916–16510**
**(C): 09919–28610**
**(D): 09916–84511**

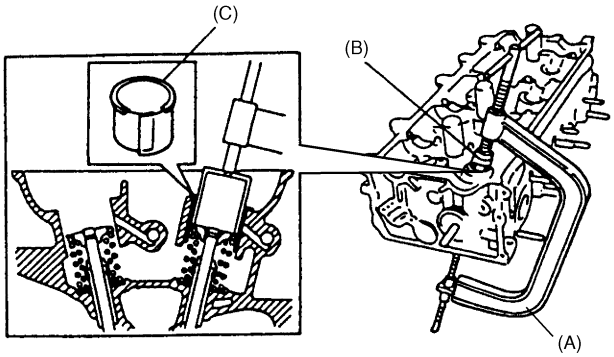


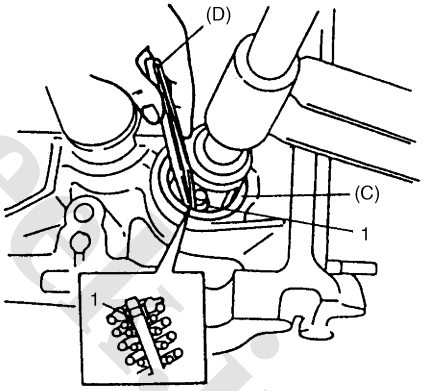

I5JB0A142045-01

 www.CarGeek.ir

3) Release special tool, and remove spring retainers and valve springs.
4) Remove valve from combustion chamber side.
5) Remove valve stem seal (1) from valve guide, and then valve spring seat (2).

**NOTE**

**Do not reuse seal once disassembled. Be sure to use new seal when assembling.**

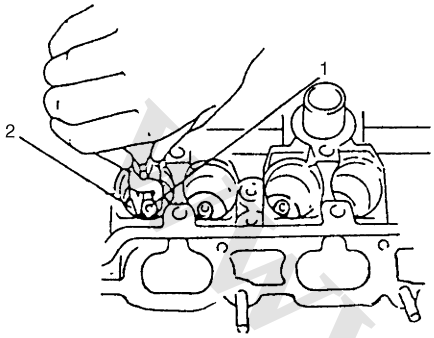


I2RH01140125-01

6) Using special tool (Valve guide remover), drive valve guide out from combustion chamber side to valve spring side.

**Special tool**
**(A): 09916–46020**

**NOTE**

**Do not reuse valve guide once disassembled. Be sure to use new valve guide (oversize) when assembling.**

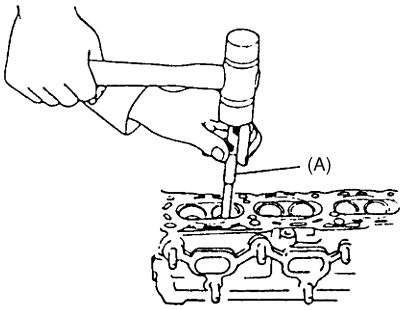


I2RH01140126-01

7) Place disassembled parts except valve stem seal and valve guide in order so that they can be installed in their original positions.

**Assembly**

1) Before installing valve guide into cylinder head, ream guide hole with special tool (11 mm reamer) so as to remove burrs and make it truly round.

**Special tool**
**(A): 09916–34542**
**(B): 09916–38210**

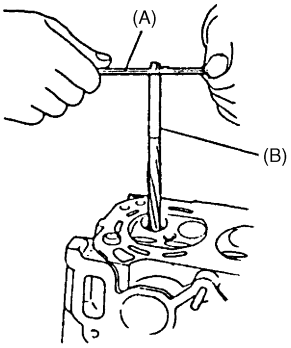


I2RH01140127-01

2) Install valve guide to cylinder head.
Heat cylinder head uniformly at a temperature of 80 to 100 °C (176 to 212 °F) so that head will not be distorted, and drive new valve guide into hole with special tools.
Drive in new valve guide until special tool (Valve guide installer) contacts cylinder head.
After installing, make sure that valve guide protrudes by 13.0 mm (0.51 in.) from cylinder head.

**Special tool**
**(A): 09916–57350**
**(B): 09916–57340**

**NOTE**

- **Do not reuse valve guide once disassembled. Install new valve guide (Oversize).**
- **Intake and exhaust valve guides are identical.**

**Valve guide oversize**
**0.03 mm (0.0012 in.)**

**Valve guide protrusion “a” (In and Ex)**
**13.0 mm (0.51 in.)**

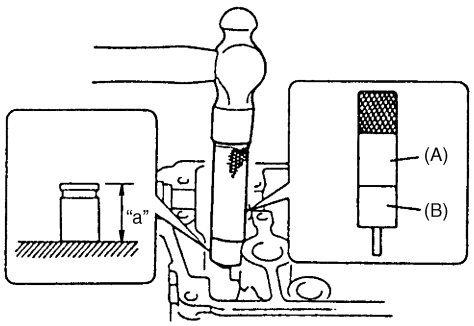


I2RH01140128-01

www.cargeek.ir

3) Ream valve guide bore with special tool (6.0 mm reamer). After reaming, clean bore.

**Special tool**
**(A): 09916–34542**
**(B): 09916–37810**

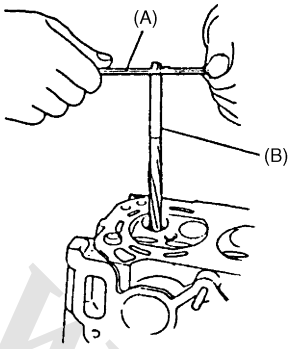


I2RH01140127-01

4) Install valve spring seat to cylinder head.

5) Install new valve stem seal (1) to valve guide.
After applying engine oil to seal and spindle of special tool (Valve guide installer handle), fit oil seal to spindle, and then install seal to valve guide by pushing special tool by hand.
After installing, check to be sure that seal is properly fixed to valve guide.

**Special tool**
**(A): 09917–98221**
**(B): 09916–57350**

**NOTE**

- **Do not reuse seal once disassembled. Be sure to install new seal.**
- **When installing, never tap or hit special tool with a hammer or else. Install seal to guide only by pushing special tool by hand. Tapping or hitting special tool may cause damage to seal.**

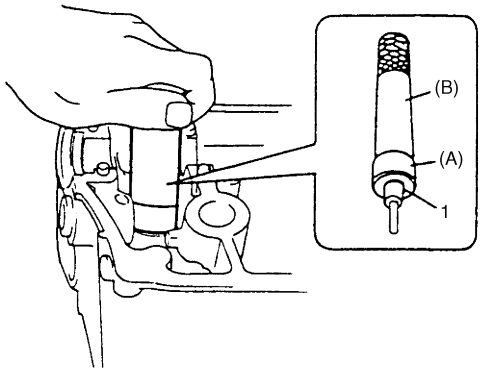


I2RH01140129-01

6) Install valve to valve guide.
Before installing valve to valve guide, apply engine oil to stem seal, valve guide bore, and valve stem.

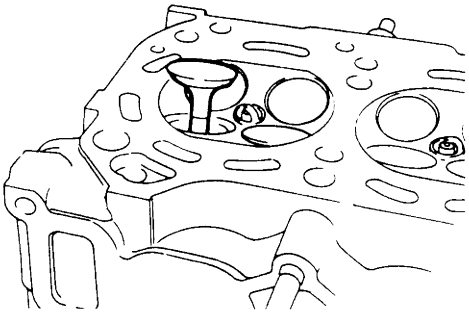

I2RH01140130-01

7) Install valve spring and spring retainer.
Each valve spring has top end (large-pitch end (1)) and bottom end (small-pitch end (2)). Be sure to position spring in place with its bottom end (small-pitch end) facing the bottom (valve spring seat side).

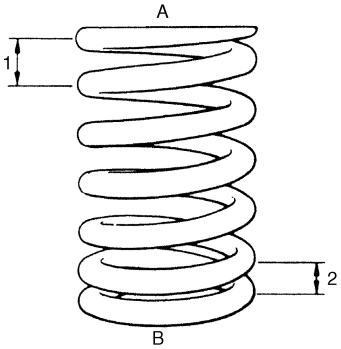


I2RH0B140100-01

| | |
|---|---|
| A: Valve spring retainer side | B: Valve spring seat side |

8) Using special tool (Valve lifter), compress valve spring and fit two valve cotters (1) into groove in valve stem.

**Special tool**
**(A): 09916–14510**
**(B): 09916–16510**
**(C): 09919–28610**
**(D): 09916–84511**

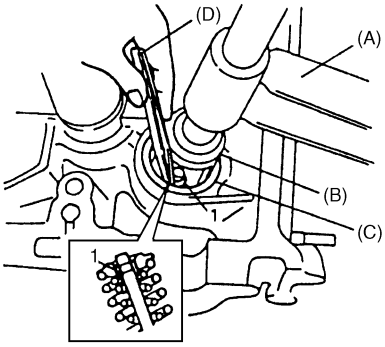


I2RH01140132-01

www.cargeek.ir

 www.CarGeek.ir

9) Install intake manifold referring to “Intake Manifold Removal and Installation: For J20 Engine”.
10) Install exhaust manifold referring to “Exhaust Manifold Removal and Installation (For J20 Engine Model): in Section 1K”.
11) Install injectors referring to “Fuel Injector Removal and Installation: in Section 1G”.

## Valves and Valve Guides Inspection

S5JB0A1426035

### Valve Guide

**Valve stem-to-guide clearance**
Using a micrometer and bore gauge, take diameter readings on valve stems and guides to check stem-to-guide clearance.
Be sure to take reading at more than one place along the length of each stem and guide.
If clearance exceeds limit, replace valve and valve guide.

**Valve stem and valve guide specification**

| Item | | Standard | Limit |
|---|---|---|---|
| Valve stem diameter [A] | In | 5.965 – 5.980 mm (0.2348 – 0.2354 in.) | — |
| | Ex | 5.940 – 5.955 mm (0.2339 – 0.2344 in.) | — |
| Valve guide bore [B] | In & Ex | 6.000 – 6.012 mm (0.2362 – 0.2366 in.) | — |
| Stem-to-guide clearance | In | 0.020 – 0.047 mm (0.0008 – 0.0018 in.) | 0.070 mm (0.0028 in.) |
| | Ex | 0.045 – 0.072 mm (0.0017 – 0.0028 in.) | 0.090 mm (0.0035 in.) |

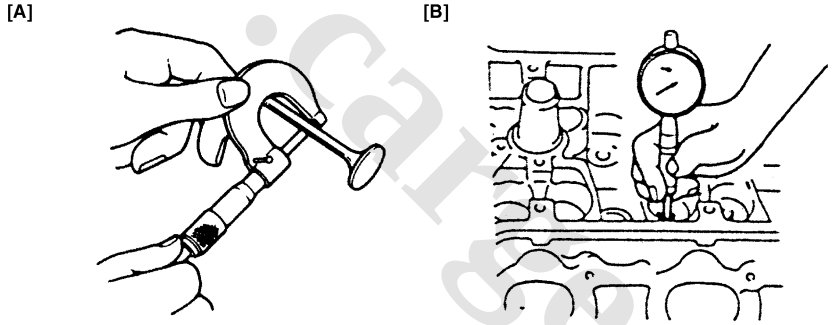


I4RS0B140016-01

**Valve stem end deflection**
If bore gauge is not available, check end deflection of valve stem with a dial gauge instead.
Move stem end in directions (1) and (2) to measure end deflection.
If deflection exceeds its limit, replace valve stem and valve guide.

**Valve stem end deflection limit**
**In: 0.14 mm (0.005 in.)**
**Ex: 0.18 mm (0.007 in.)**

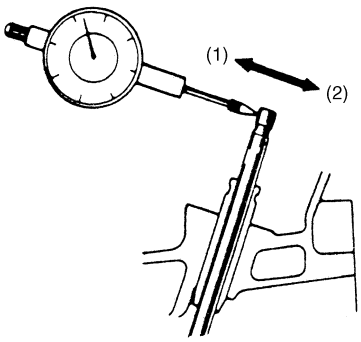


IYSQ01141096-01

www.cargeek.ir

## Valve

### Visual inspection

- Remove all carbon from valves.
- Inspect each valve for wear, burn or distortion at its face and stem end, as necessary, replace it.
- Inspect valve stem end face for pitting and wear. If pitting or wear is found there, valve stem end may be resurfaced, but not too much to grind off its chamber. When it is worn out too much that its chamber is gone, replace valve.

I2RH01140135-01

### Valve head thickness

Measure thickness “a” of valve head. If measured thickness exceeds limit, replace valve.

**Valve head thickness “a”**

**Intake**
**Standard: 1.25 – 1.55 mm (0.049 – 0.061 in.)**
**Limit: 0.9 mm (0.035 in.)**
**Exhaust**
**Standard: 1.45 – 1.75 mm (0.057 – 0.069 in.)**
**Limit: 1.1 mm (0.04 in.)**

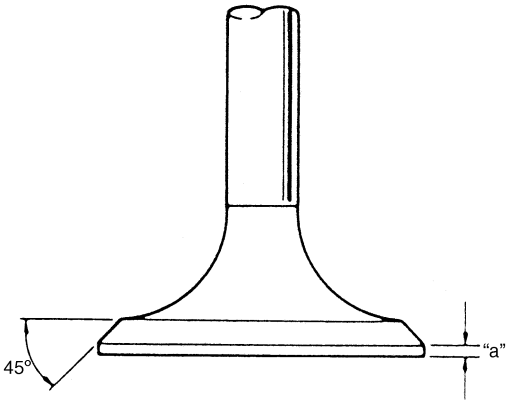


I2RH0B140102-01

### Valve head radial runout

Check each valve for radial runout with a dial gauge and “V” block. To check runout, rotate valve slowly. If runout exceeds its limit, replace valve.

**Valve head radial runout**
**Limit: 0.08 mm (0.003 in.)**

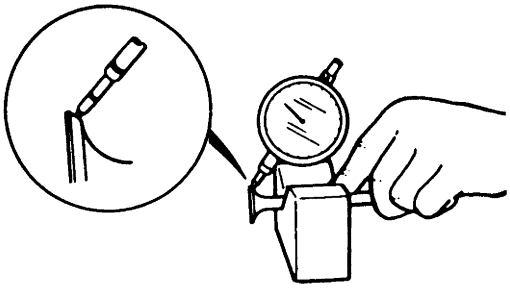

I2RH01140136-01

### Seating contact width

Create contact pattern on each valve in the usual manner, i.e., by giving uniform coat of marking compound to valve seat and by rotatingly tapping seat with valve head. Valve lapper (tool used in valve lapping) must be used.
Pattern produced on seating face of valve must be a continuous ring without any break, and the width of pattern must be within specified range.

**Standard seating width “a” revealed by contact pattern on valve face**
**Intake and Exhaust: 1.0 – 1.4 mm (0.0389 – 0.0551 in.)**

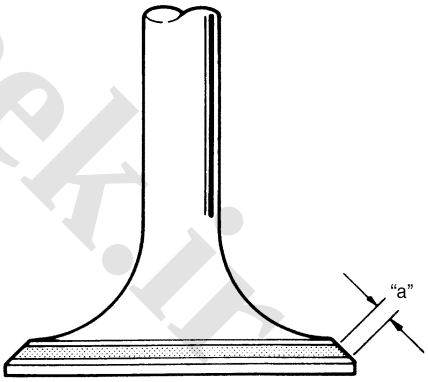


I2RH0B140103-01

www.cargeek.ir

 www.CarGeek.ir

**Valve seat repair**

A valve seat not producing a uniform contact with its valve or showing width of seating contact that is out of specified range must be repaired by regrinding or by cutting and regrinding and finished by lapping.

1) **Exhaust valve seat:**
   Use valve seat cutters (1) to make two cuts as illustrated in the figure. Two cutters must be used: the first for making 15° angle, and the second for making 45° angle. The second cut must be made to produce desired seat width.

   **Seat width for exhaust valve seat**
   **"a": 1.0 – 1.4 mm (0.0389 – 0.0551 in.)**

2) **Intake valve seat:**
   Use valve seat cutters (1) to make three cuts as illustrated in the figure. Three cutters must be used: the 1st for making 25° angle, the 2nd for making 60° angle, and 3rd for making 45° angle. The 3rd cut (45°) must be made to produce desired seat width.

   **Seat width for intake valve seat**
   **"b": 1.0 – 1.4 mm (0.0389 – 0.0551 in.)**

3) **Valve lapping:**
   Lap valve on seat in two steps, first with coarse size lapping compound applied to face and the second with fine-size compound, each time using valve lapper according to usual lapping method.

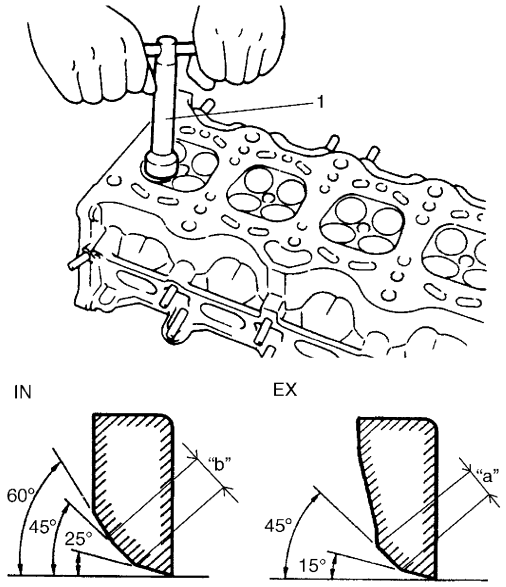


I5JB0A142047-02

## Cylinder Head Inspection

S5JB0A1426047

- Remove all carbon deposits from combustion chambers.

**NOTE**

**Do not use any sharp-edged tool to scrape off carbon deposits. Be careful not to scuff or nick metal surfaces when decarbonizing. The same applies to valves and valve seats, too.**

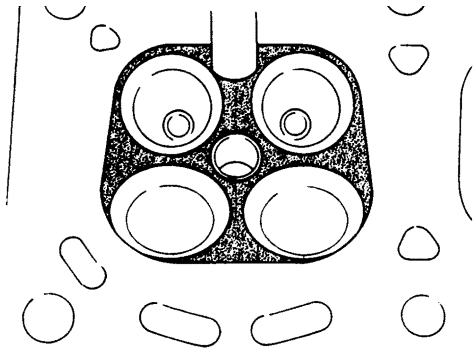

I2RH0B140105-01

- Check cylinder head for cracks on intake and exhaust ports, combustion chambers, and head surface. Using a straightedge and thickness gauge, check flatness of gasketed surface at a total of 6 locations. If distortion limit is exceeded, correct gasketed surface with a surface plate and abrasive paper of about #400 (Waterproof silicon carbide abrasive paper): place abrasive paper on and over surface plate, and rub gasketed surface against paper to grind off high spots. Should this fail to reduce thickness gauge readings to within limit, replace cylinder head.
  Leakage of combustion gases from this gasketed joint is often due to warped gasketed surface: such leakage results in reduced power output.

  **Distortion for cylinder head surface on piston side**
  **Limit: 0.03 mm (0.001 in.)**

www.cargeek.ir

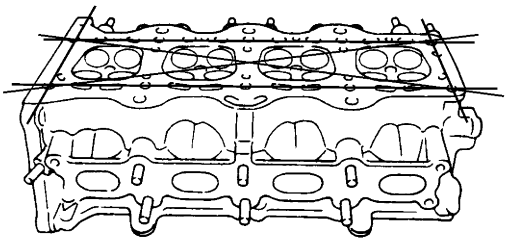

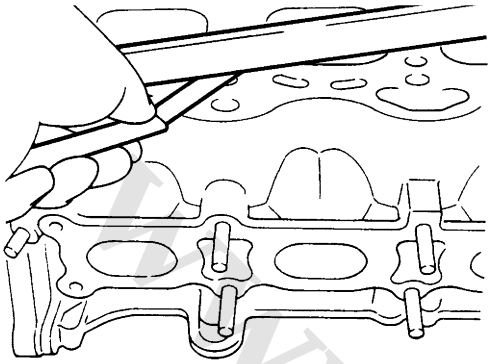

I2RH0B140106-01

- Distortion of manifold seating faces:
  Check seating faces of cylinder head for manifolds, using a straightedge and thickness gauge, in order to determine whether these faces should be corrected or cylinder head replaced.

  **Distortion for cylinder head surface on intake and exhaust manifold**
  **Limit: 0.05 mm (0.002 in.)**

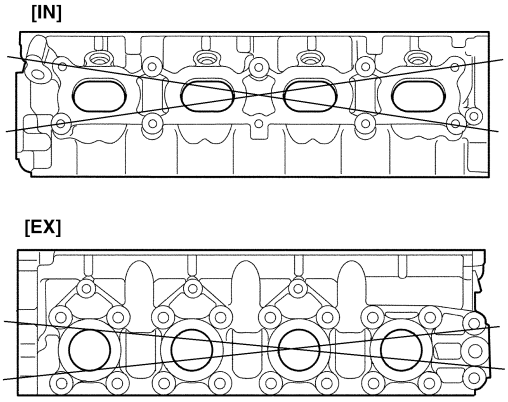


I2RH0B140107-01

## Valve Spring Inspection

S5JB0A1426048

### Valve Spring Free Length and Preload

Referring to data, check to be sure that each spring is in sound condition, free of any evidence of breakage or weakening. Remember, weakened valve springs can cause chatter, not to mention possibility of reducing power output due to gas leakage caused by decreased seating pressure.

**Valve spring free length**
**Standard: 51.13 mm (2.013 in.)**
**Limit: 50.13 mm (1.974 in.)**

**Valve spring preload**
**Standard: 219 – 241 N (21.9 – 24.1 kg) for 37.60 mm (48.3 – 53.1 lb/1.480 in.)**
**Limit: 208 N (20.8 kg) for 37.60 mm (45.9 lb/1.480 in.)**

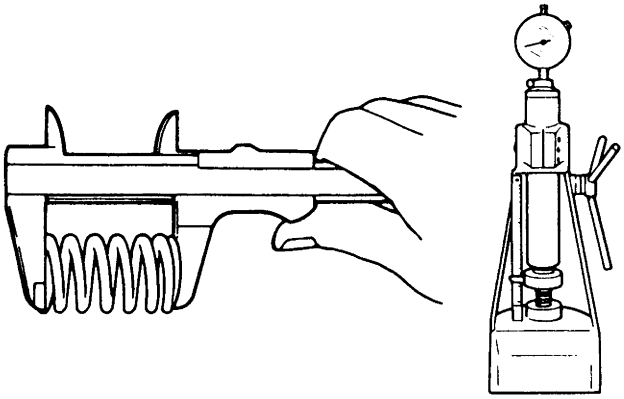

I2RH01140143-01

### Spring Squareness

Use a square and surface plate to check each spring for squareness in terms of clearance between end of valve spring and square. Valve springs found to exhibit a larger clearance than limit must be replaced.

**Valve spring squareness**
**Limit: 1.6 mm (0.063 in.)**

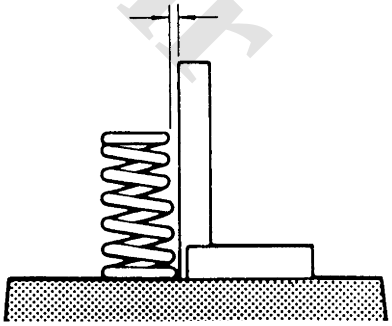

I2RH01140144-01

www.cargeek.ir

 www.CarGeek.ir

## Pistons, Piston Rings, Connecting Rods and Cylinders Components

S5JB0A1426036

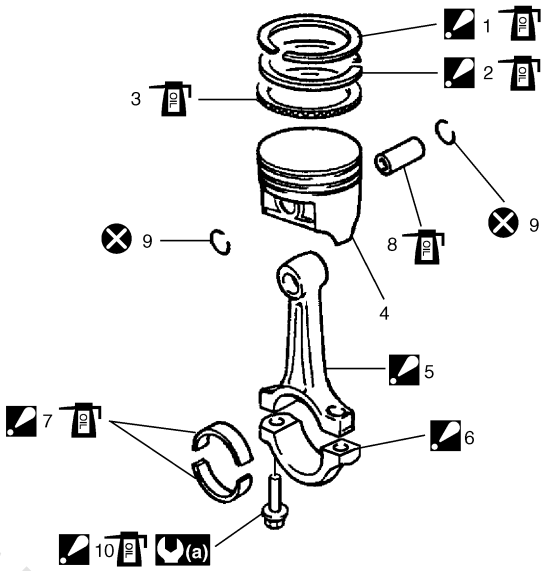


I5JB0A142048-02

| | |
|---|---|
| 1. Top ring<br>: "TOP" mark provided on piston ring comes to facing up. | 8. Piston pin |
| 2. 2nd ring<br>: "TOP" mark provided on piston ring comes to facing up. | 9. Piston pin circlip |
| 3. Oil ring | 10. Connecting rod bolt<br>: Check connecting rod bolt, plastic deformation tightening bolt, for deformation when reuse it due to plastic deformation tightening referring to "Connecting Rod Bolt" under "Pistons, Piston Rings, Connecting Rods and Cylinders Inspection and Cleaning: For J20 Engine" if it is reused. |
| 4. Piston | (a) : 15 N·m (1.5 kgf-m, 11.0 lb-ft) 45° and 45° by the specified procedure. |
| 5. Connecting rod | : Apply engine oil to sliding surface of each part. |
| 6. Connecting rod bearing cap<br>: See "A" | : Do not reuse. |
| 7. Connecting rod bearing<br>: See "B" | |
| "A": Point arrow mark on cap to crankshaft pulley side. Do not apply engine oil to inner surface of bearing cap. | |
| "B": Do not apply engine oil between con-rod big end and bearing, between cap and bearing. | |

## Pistons, Piston Rings, Connecting Rods and Cylinders Removal and Installation

S5JB0A1426037

### Removal

1) Remove engine assembly from vehicle referring to "Engine Assembly Removal and Installation: For J20 Engine".
2) Remove oil pump with oil pump strainer. Refer to "Oil Pump Removal and Installation: For J20 Engine in Section 1E" for removal.
3) Remove cylinder head. Refer to "Valves and Cylinder Head Removal and Installation: For J20 Engine" for removal.
4) Mark cylinder number on all pistons, connecting rods and connecting rod caps.
5) Remove connecting rod bearing caps.
6) Clean carbon from top of cylinder bore before removing piston from cylinder.
7) Push piston and connecting rod assembly out through the top of cylinder bore.

### Installation

1) Apply engine oil to pistons, rings, cylinder walls, connecting rod bearings and crank pins.

**NOTE**

**Do not apply oil between connecting rod and bearing or between bearing cap and bearing.**

2) When installing piston and connecting rod assembly into cylinder bore, point front mark (3) on piston head to crankshaft pulley side (1).

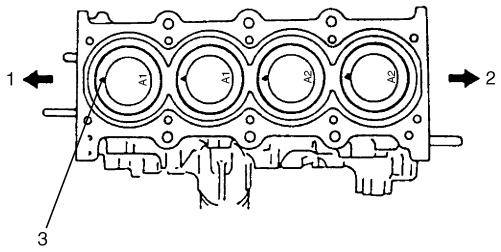


I5JB0A142049-01

2. Flywheel side

www.cargeek.ir

3) Install piston and connecting rod assembly into cylinder bore. Use special tool (Piston ring compressor) to compress rings. Guide connecting rod into place on crankshaft.
Using a hammer handle, tap piston head to install piston into bore. Hold ring compressor firmly against cylinder block until all piston rings have entered cylinder bore.

**Special tool**
**(A): 09916–77310**

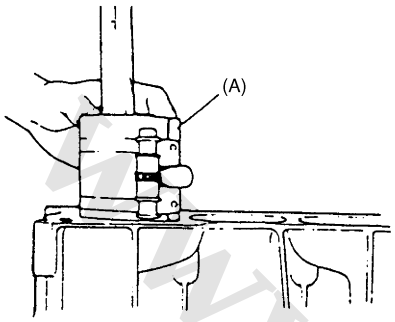


I2RH01140149-01

4) Install connecting rod bearing cap (1) as follows.

**NOTE**

**If connecting rod bolt is reused, make sure to check connecting rod bolt for deformation referring to "Connecting Rod Bolt Deformation (Plastic Deformation Tightening Bolt)" under "Pistons, Piston Rings, Connecting Rods and Cylinders Inspection and Cleaning: For J20 Engine".**

a) Point arrow mark (2) on cap to crankshaft pulley side.
b) Apply engine oil to new connecting rod bolts (3).
c) Tighten all connecting rod bolts to 15 N·m (1.5 kgf-m, 11.0 lb-ft).
d) Retighten them by turning through 45°.
e) Repeat step d) once again.

**Tightening torque**
**Connecting rod bolt (a): Tighten 15 N·m (1.5 kgf-m, 11.0 lb-ft), 45° and 45° by the specified procedure.**

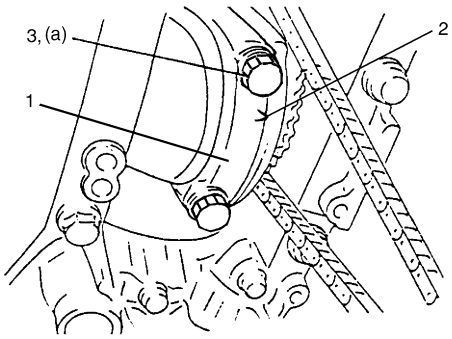


I4RH01140037-01

5) Install cylinder head. Refer to "Valves and Cylinder Head Removal and Installation: For J20 Engine" for installation.
6) Install oil pan. Refer to "Oil Pan and Oil Pump Strainer Removal and Installation: For J20 Engine in Section 1E" for installation.
7) Install engine assembly to vehicle referring to "Engine Assembly Removal and Installation: For J20 Engine".

## Pistons, Piston Rings, Connecting Rods and Cylinders Disassembly and Assembly

S5JB0A1426038

### Disassembly

1) Using piston ring expander, remove two compression rings (Top and 2nd) and oil ring from piston.
2) Remove piston pin from connecting rod.
   - Ease out piston pin circlips (1), as shown.

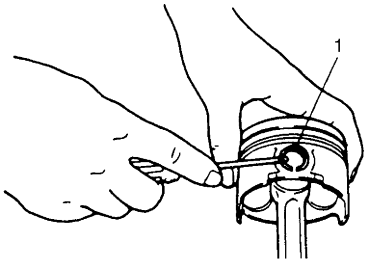


I2RH01140151-01

   - Force piston pin out.

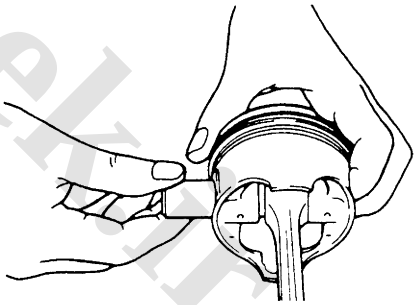

I2RH01140152-01

www.cargeek.ir

 www.CarGeek.ir

## Assembly

**NOTE**

**Two sizes of piston are available as standard size spare part so as to ensure proper piston-to-cylinder clearance. When installing a standard size piston, make sure to match piston with cylinder as follows.**

1) Each piston (1) has stamped number (2) as shown. It represents outer diameter of piston.
2) There are also painted color (3) of red or blue on cylinder block (2) as shown.

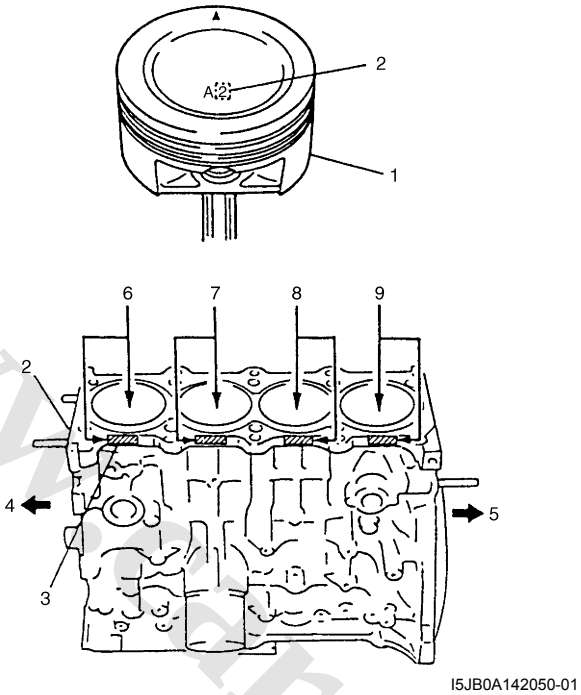


| | |
|---|---|
| 4. Crank shaft pulley side | 7. No.2 cylinder |
| 5. Flywheel side | 8. No.3 cylinder |
| 6. No.1 cylinder | 9. No.4 cylinder |

3) Stamped number on piston and painted color (or stamped number) on cylinder block should correspond. That is, install number “2” stamped piston to cylinder which is identified with blue painted (or “2” stamped) and a number “1” piston to cylinder with red painted (or “1” stamped).
   Also, a letter “A” or “B” is stamped on piston head but ordinarily it is not necessary to discriminate each piston by this letter.

**Piston outer diameter and cylinder bore diameter specification**

| Piston | | Cylinder | |
|---|---|---|---|
| **Number** | **Outer diameter** | **Paint (Number)** | **Bore diameter** |
| **1** | **83.9800 – 83.9900 mm (3.3063 – 3.3066 in.)** | **Red (1)** | **84.0101 – 84.0200 mm (3.3075 – 3.3078 in.)** |
| **2** | **83.9700 – 83.9799 mm (3.3059 – 3.3062 in.)** | **Blue (2)** | **84.0000 – 84.0100 mm (3.3071 – 3.3074 in.)** |

www.cargeek.ir

4) Install piston pin to piston (1) and connecting rod (3): After applying engine oil to piston pin and piston pin holes in piston and connecting rod, fit connecting rod to piston as shown in figure and insert piston pin to piston and connecting rod, and install piston pin circlips.

**NOTE**

**Oil hole (4) come on intake side.**

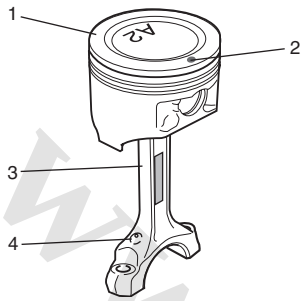


I5JB0A142051-01

| | |
|---|---|
| 2. Front mark | 4. Oil hole |

**NOTE**

**Circlip (4) should be installed so that circlip end gap comes within such range as indicated by arrow.**

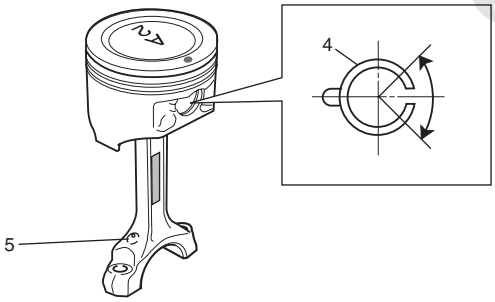


I4RH01140039-01

| | |
|---|---|
| 1. Piston | 3. Connecting rod |
| 2. Front mark | 5. Oil hole |

5) Install piston rings to piston:

- As indicated in figure at the left, 1st and 2nd rings have “TOP” mark respectively. When installing these piston rings to piston, direct marked side of each ring toward top of piston.
- 1st ring (1) differs from 2nd ring (2) in thickness, shape and color of surface contacting cylinder wall.
  Distinguish 1st ring from 2nd ring by referring to figure.
- When installing oil ring (3), install spacer first and then two rails.

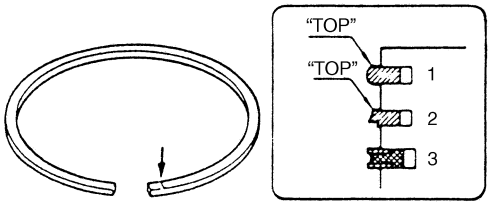


I5JB0A142052-02

6) After installing three rings (1st, 2nd and oil rings), distribute their end gaps as shown in figure.

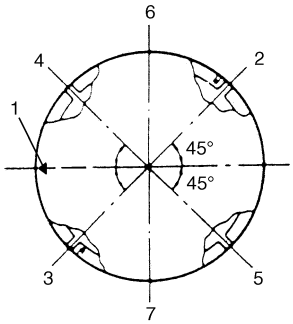


I5JB0A142053-01

| | |
|---|---|
| 1. | Front mark |
| 2. | 1st ring end gap |
| 3. | 2nd ring end gap and oil ring spacer gap |
| 4. | Oil ring upper rail gap |
| 5. | Oil ring lower rail gap |
| 6. | Intake side |
| 7. | Exhaust side |

www.cargeek.ir

 www.CarGeek.ir

## Pistons, Piston Rings, Connecting Rods and Cylinders Inspection and Cleaning

S5JB0A1426039

### Inspection

#### Cylinder

- Inspect cylinder walls for scratches, roughness, or ridges which indicate excessive wear. If cylinder bore is very rough or deeply scratched, or ridged, rebore cylinder and use over size piston.
- Using a cylinder gauge, measure cylinder bore in thrust and axial directions at two positions as shown in figure.
  If any of following conditions is noted, rebore cylinder.

1) Cylinder bore diameter exceeds limit.
2) Difference of measurements at two positions exceeds taper limit.
3) Difference between thrust and axial measurements exceeds out-of-round limit.

**Cylinder bore diameter**
**Standard: 84.000 – 84.020 mm (3.3070 – 3.3078 in.)**
**Limit: 84.050 mm (3.3090 in.)**

**Taper and out-of-round**
**Limit: 0.10 mm (0.004 in.)**

**NOTE**

**If any one of four cylinders has to be rebored, rebore all four to the same next oversize. This is necessary for the sake of uniformity and balance.**

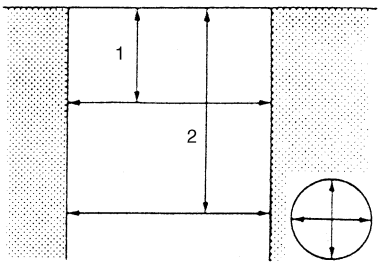


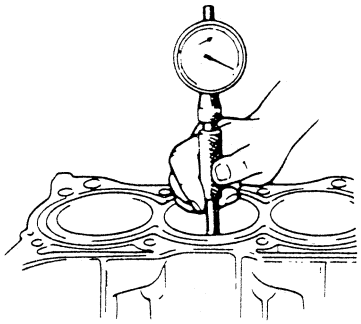

I5JB0A142046-01

| | |
|---|---|
| 1. 50 mm (1.96 in.) | 2. 95 mm (3.74 in.) |

#### Pistons

- Inspect piston for faults, cracks or other damages. Damaged or faulty piston should be replaced.
- Piston diameter:
  As indicated in figure, piston diameter should be measured at a position 26.5 mm (1.04 in.) (“a”) from piston skirt end in the direction perpendicular to piston pin.

**Piston diameter**

| | |
|---|---|
| **Standard** | **83.9700 – 83.9900 mm (3.3059 – 3.3067 in.)** |
| **Oversize: 0.50 mm (0.0196 in.)** | **84.4700 – 84.4900 mm (3.3256 – 3.3264 in.)** |

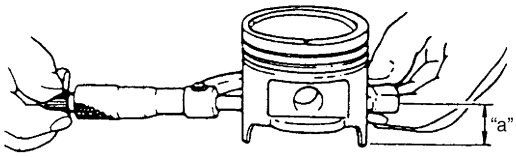


I2RH01140157-01

- Piston clearance:
  Measure cylinder bore diameter and piston diameter to find their difference which is piston clearance. Piston clearance should be within specification as follows. If it is out of specification, rebore cylinder and use oversize piston.

**Piston clearance**
**0.02 – 0.04 mm (0.0008 – 0.0015 in.)**

**NOTE**

**Cylinder bore diameters used here are measured in thrust direction at two positions.**

- Ring groove clearance:
  Before checking, piston grooves must be clean, dry and free of carbon.
  Fit new piston ring (1) into piston groove, and measure clearance between ring and ring land by using thickness gauge (2).
  If clearance is out of specification, replace piston.

**Ring groove clearance**

| Item | Standard | Limit |
|---|---|---|
| **Top ring** | **0.03 – 0.07 mm (0.0120 – 0.0027 in.)** | **0.12 mm (0.0047 in.)** |
| **2nd ring** | **0.02 – 0.06 mm (0.0008 – 0.0023 in.)** | **0.1 mm (0.0039 in.)** |
| **Oil ring** | **0.06 – 0.15 mm (0.0024 – 0.0059 in.)** | **—** |

www.cargeek.ir

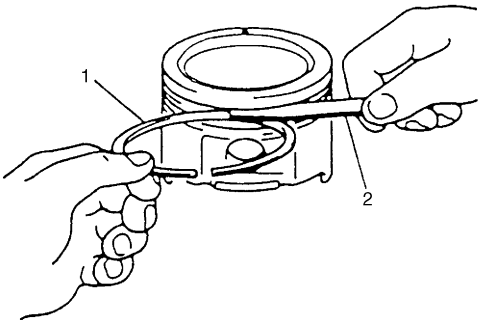


I2RH01140159-01

**Piston pin**

- Check piston pin, connecting rod small end bore and piston bore for wear or damage, paying particular attention to condition of small end bore bush. If pin, connecting rod small end bore or piston bore is badly worn or damaged, replace pin, connecting rod or piston.
- Piston pin clearance: Check piston pin clearance in small end.
  Replace connecting rod if its small end is badly worn or damaged or if measured clearance exceeds limit.

  **Piston pin clearance in small end**
  **Standard: 0.003 – 0.014 mm (0.0001 – 0.0005 in.)**

  **Piston pin clearance in piston**
  **Standard: 0.006 – 0.017 mm (0.00024 – 0.00067 in.)**

  **Small-end bore**
  **21.003 – 21.011 mm (0.8269 – 0.8272 in.)**

  **Piston pin diameter [B]**
  **20.997 – 21.000 mm (0.8267 – 0.8268 in.)**

  **Piston bore [A]**
  **21.006 – 21.014 mm (0.8270 – 0.8273 in.)**

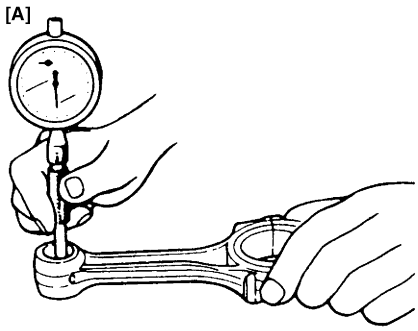


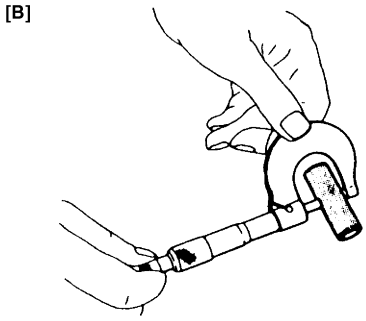


I5JB0A142054-02

**Piston rings**

To measure end gap, insert piston ring (2) into cylinder bore and then measure the gap by using thickness gauge (1).
If measured gap is out of specification, replace ring.

**NOTE**

**Clean carbon and any other dirt from top of cylinder bore before inserting piston ring.**

**Piston ring end gap**

| Item | Standard | Limit |
|---|---|---|
| Top ring | 0.20 – 0.33 mm (0.0079 – 0.0129 in.) | 0.7 mm (0.0276 in.) |
| 2nd ring | 0.33 – 0.48 mm (0.0129 – 0.0188 in.) | 0.7 mm (0.0276 in.) |
| Oil ring | 0.20 – 0.50 mm (0.0079 – 0.0196 in.) | 1.8 mm (0.0709 in.) |

**Piston rings end gap**
**“a”: 120 mm (4.72 in.)**

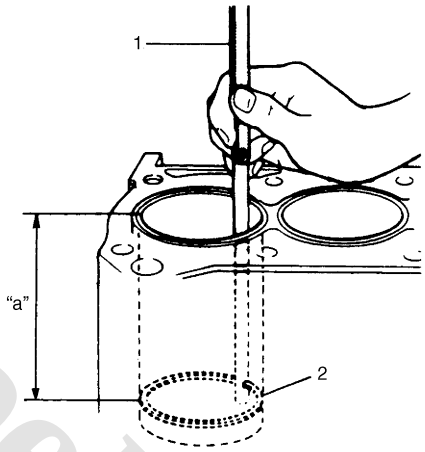


I2RH01140161-01

www.cargeek.ir

 www.CarGeek.ir

### Connecting rod

- Big-end side clearance:
  Check big-end of connecting rod for side clearance, with rod fitted and connected to its crank pin in the normal manner. If measured clearance is found to exceed its limit, replace connecting rod.

**Big-end side clearance**

| Standard | Limit |
|---|---|
| 0.25 – 0.40 mm (0.0099 – 0.0150 in.) | 0.45 mm (0.0177 in.) |

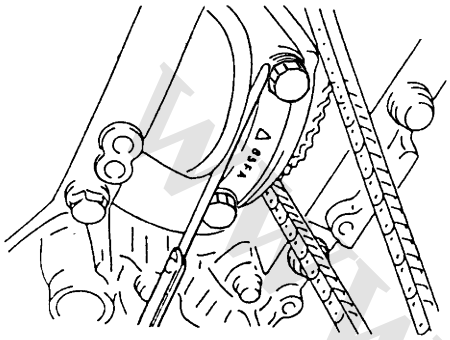

I4RH01140041-01

- Connecting rod alignment:
  Mount connecting rod on aligner to check it for bow and twist. If limit is exceeded, replace it.

**Limit on bow**
**0.05 mm (0.0020 in.)**

**Limit on twist**
**0.10 mm (0.0039 in.)**

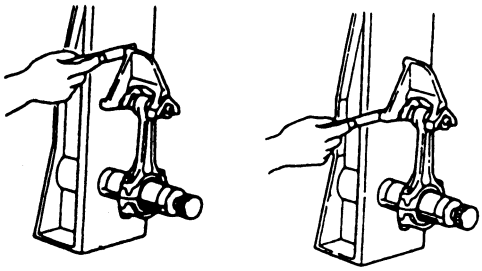

I4RH01140053-01

### Crank pin and connecting rod bearings

- Inspect crank pin for uneven wear or damage. Measure crank pin for out-of-round or taper with a micrometer. If crank pin is damaged, or out-of round or taper is out of limit, replace crankshaft or regrind crank pin referring to the following step 6).

**Connecting rod bearing and crank pin**

| Item | Standard |
|---|---|
| Crank pin diameter | 49.982 – 50.000 mm (1.9768 – 1.9685 in.) |

**Out-of-round**
**"A" – "B"**

**Taper**
**"a" – "b"**

**Out-of-round and taper limits**
**0.01 mm (0.0004 in.)**

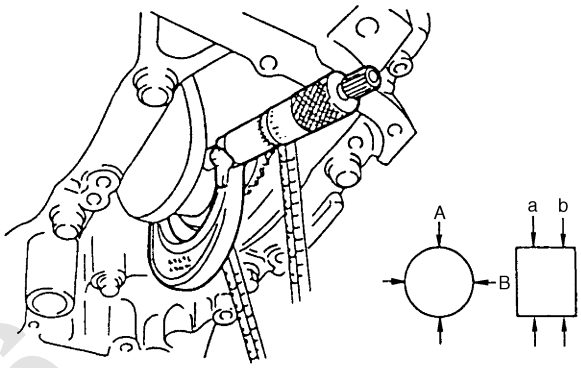


I2RH01140163-01

- **Connecting rod bearing general information:**
  Inspect bearing shells for signs of fusion, pitting, burn or flaking and observe contact pattern. Bearing shells found in defective condition must be replaced.
  Two kinds of connecting rod bearings are available; standard size bearing and 0.25 mm (0.0098 in.) undersize bearing. For identification of undersize bearing, it is painted red (1) at the position as indicated in the figure, undersize bearing thickness is 1.605 – 1.615 mm (0.0632 – 0.0635 in.) at the center of it.

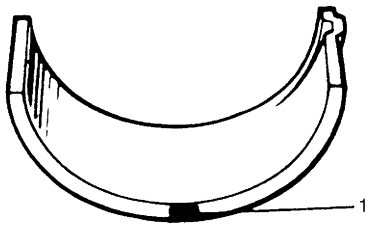


I2RH01140164-01

www.cargeek.ir

- **Connecting rod bearing clearance:**
  a. Before checking bearing clearance, clean bearing and crank pin.
  b. Install bearing in connecting rod and bearing cap.
  c. Place a piece of gauging plastic (1) to full width of crank pin as contacted by bearing (parallel to crankshaft), avoiding oil hole.

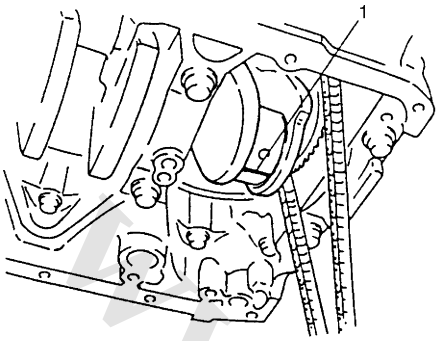


I2RH01140165-01

  d. Install connecting rod bearing cap (1) as follows.
     i. Point arrow mark (2) on cap to crankshaft pulley side.
     ii. Apply engine oil to connecting rod bolts (3).
     iii. Tighten all connecting rod bolts to 15 N·m (1.5 kgf-m, 11.0 lb-ft).
     iv. Retighten them by turning through 45°.
     v. Repeat step d) once again.

     **Tightening torque**
     **Connecting rod bolt (a): Tighten 15 N·m (1.5 kgf-m, 11.0 lb-ft), 45° and 45° by the specified procedure.**

**NOTE**

**Do not turn crankshaft with gauging plastic installed.**

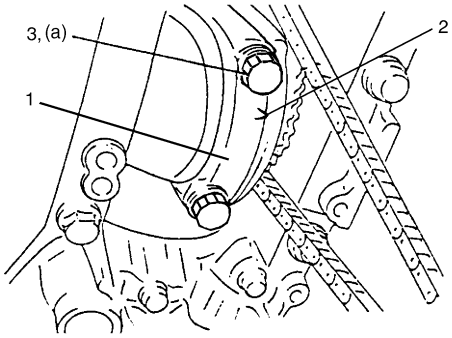


I4RH01140037-01

  e. Remove connecting rod bearing cap, and using a scale (2) on gauging plastic envelope, measure gauging plastic (1) width at the widest point (clearance).
     If clearance exceeds its limit, select connecting rod bearing referring to “Pistons, Piston Rings, Connecting Rods and Cylinders Inspection and Cleaning: For J20 Engine” below mentioned item. After selecting new bearing, recheck clearance.

**Bearing clearance**

| Standard | Limit |
|---|---|
| **0.045 – 0.063 mm (0.0018 – 0.0025 in.)** | **0.08 mm (0.0031 in.)** |

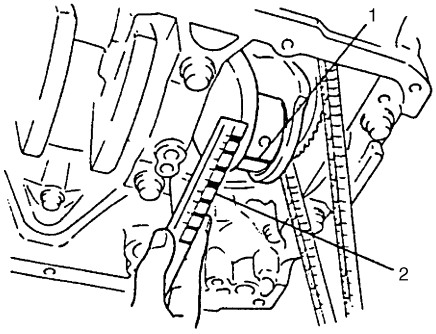


I2RH01140167-01

  f. If clearance can not be brought to within its limit even by using a new standard size bearing, replace crankshaft or regrind crankpin to undersize as follows.
     – Install 0.25 mm undersize bearing to connecting rod big end.
     – Measure bore diameter of connecting rod big end.
     – Regrind crankpin to the following finished diameter.

Finished crankpin diameter = Measured big end bore diameter (including undersize bearing) – 0.054 mm (0.0021 in.)

     – Confirm that bearing clearance is within the standard value.

**NOTE**

**After checking the connecting rod bearing clearance, make sure that checking for “Connecting rod bolt deformation”.**

www.cargeek.ir

 www.CarGeek.ir

- **Selection of connecting rod bearings:**

**NOTE**

- **If bearing is in malcondition or bearing clearance is out of specification, select a new standard bearing according to the following procedure and install it.**
- **When replacing crankshaft or connecting rod and its bearing due to any reason, select new standard bearings to be installed referring to numbers stamped on connecting rod and its cap and/or alphabets stamped on crank web of No. 3 cylinder.**

a. Check stamped numbers on connecting rod and its cap as shown.
Three kinds of numbers (“1”, “2” and “3”) represent the following connecting rod big end inside diameters.
For example, stamped number “1” indicates that corresponding connecting rod big-end inside diameter is 53.0000 – 53.0060 mm (2.0867 – 2.0868 in.).

**Connecting rod big-end inside diameter**

| Stamped numbers | Connecting rod big-end inside diameter |
|---|---|
| 1 | 53.0000 – 53.0060 mm (2.0867 – 2.0868 in.) |
| 2 | 53.0061 – 53.0120 mm (2.0869 – 2.0870 in.) |
| 3 | 53.0121 – 53.0180 mm (2.0871 – 2.0873 in.) |

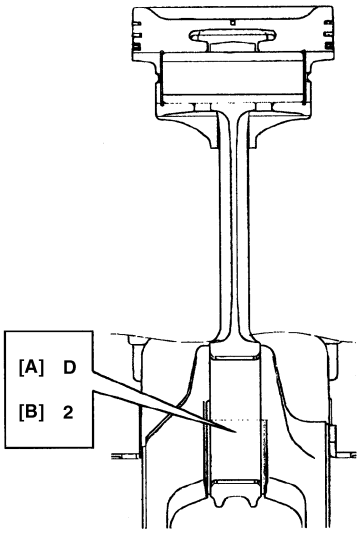


I2RH01140210-01

| | |
|---|---|
| [A]: | Weight indication mark (It is not necessary in servicing) |
| [B]: | Connecting rod big-end inside diameter number |

b. Next, check crank pin diameter. On crank web of No. 3 cylinder, four alphabets are stamped as shown in the figure.
Three kinds of alphabet (“A”, “B” and “C”) represent the following crank pin diameter respectively.
For example, stamped “A” indicates that corresponding crank pin diameter is 49.9940 – 50.0000 mm (1.9683 – 1.9685 in.).

**Crank pin diameter**

| Stamped alphabet | Crank pin diameter (without bearing) |
|---|---|
| A | 49.9940 – 50.0000 mm (1.9683 – 1.9685 in.) |
| B | 49.9880 – 49.9939 mm (1.9681 – 1.9682 in.) |
| C | 49.9820 – 49.9879 mm (1.9677 – 1.9680 in.) |

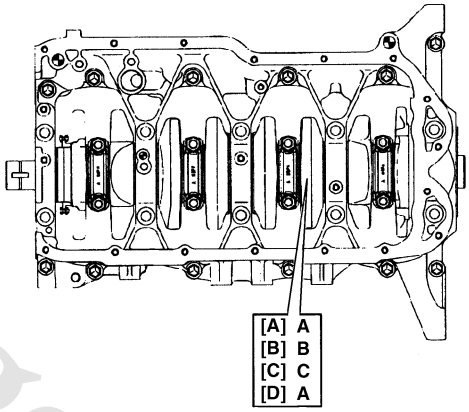


I5JB0A142055-01

| | |
|---|---|
| [A]: | Crankshaft pin diameter for No.1 cylinder |
| [B]: | Crankshaft pin diameter for No.2 cylinder |
| [C]: | Crankshaft pin diameter for No.3 cylinder |
| [D]: | Crankshaft pin diameter for No.4 cylinder |

c. There are 5 kinds of standard bearings differing in thickness. To distinguish them, they are painted in the following colors at the position as indicated in the figure.
Each color indicated the following thickness at the center of bearing.

**Standard size of connecting rod bearing thickness**

| Color painted | Bearing thickness |
|---|---|
| Green | 1.482 – 1.485 mm (0.05835 – 0.05846 in.) |
| Black | 1.485 – 1.488 mm (0.05847 – 0.05858 in.) |
| Colorless | 1.488 – 1.491 mm (0.05859 – 0.05870 in.) |
| Yellow | 1.491 – 1.494 mm (0.05871 – 0.05881 in.) |
| Blue | 1.494 – 1.497 mm (0.05882 – 0.05893 in.) |

www.cargeek.ir

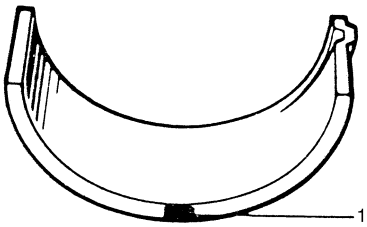


IYSQ01141169-01

1. Paint

d. From number stamped on connecting rod and its cap and alphabet stamped on crank web No. 3 cylinder, determine new standard bearing to be installed to connecting rod big-end inside, by referring to the table.
For example, if number stamped on connecting rod and its cap is “1” and alphabet stamped on crank web No. 3 cylinder is “B”, install a new standard bearing painted in “Black” to its connecting rod big-end inside.

**Specifications of new standard connecting rod bearing size**

| | | Number stamped on connecting rod and its cap (Connecting rod big end inside diameter) | | |
|---|---|---|---|---|
| | | 1 | 2 | 3 |
| Alphabet stamped on crank web of No. 3 cylinder (Crank pin diameter) | A | Green | Black | Colorless |
| | B | Black | Colorless | Yellow |
| | C | Colorless | Yellow | Blue |

e. Check bearing clearance with newly selected standard bearing referring to “Crank pin and connecting rod bearings: For J20 Engine”.
If clearance still exceeds its limit, use next thicker bearing and recheck clearance.

- **Connecting rod bolt**
Measure each thread diameter of connecting rod bolts (1) at “A” on 28.5 mm (1.12 in.) from bolt mounting surface and “B” on 42.0 mm (1.65 in.) from bolt mounting surface by using a micrometer (2).
Calculate difference in diameters (“A” – “B”). If it exceeds limit, replace connecting rod.

**Connecting rod bolt measurement points**
**“a”: 28.5 mm (1.12 in.)**
**“b”: 42.0 mm (1.65 in.)**

**Connecting rod bolt diameter difference limit (“A” – “B”): 0.1 mm (0.004 in.)**

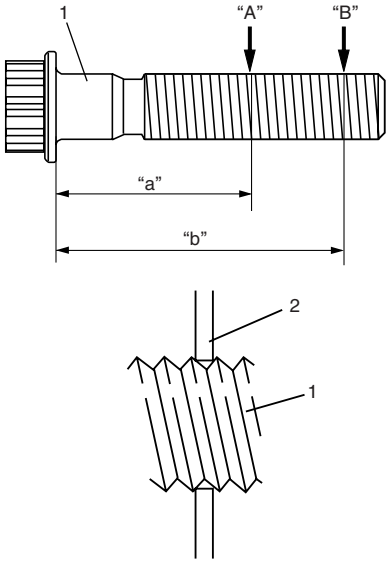


I4RH01140043-01

**Cleaning**
Clean carbon from piston head and ring grooves, using a suitable tool.

www.cargeek.ir

 www.CarGeek.ir

## Main Bearings, Crankshaft and Cylinder Block Components

S5JB0A1426040

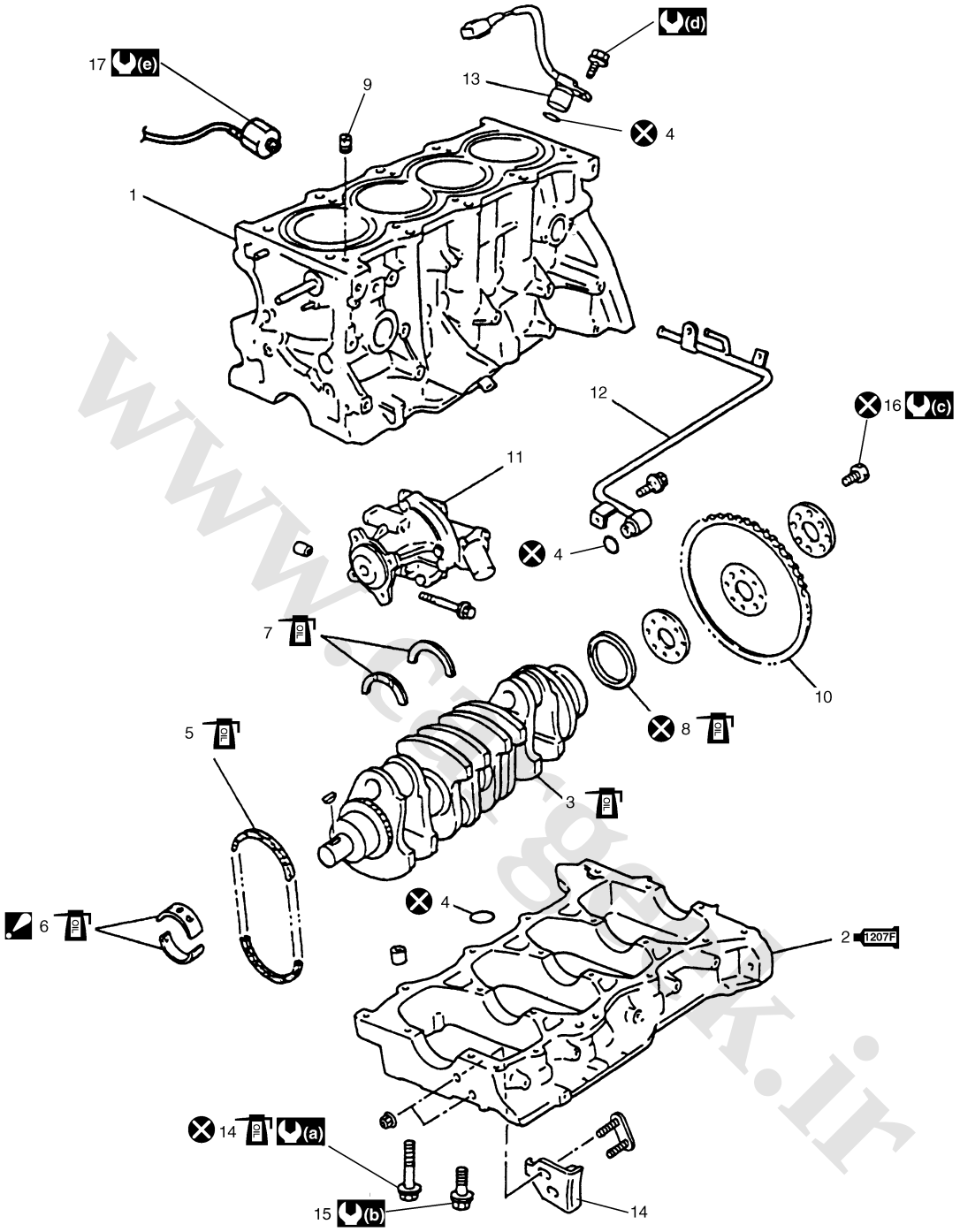


I5JB0A142056-02

www.cargeek.ir

| | | |
|---|---|---|
| 1. Cylinder block | 9. Check valve | 17. Knock sensor |
| 1207F 2. Lower crankcase<br>: Apply sealant 99000-31250 to mating surface. | 10. Flywheel | (a) : Tighten 40 N·m (4.0 kgf-m, 29.0 lb-ft), 0 N·m (0 kgf-m, 0 lb-ft), 40 N·m (4.0 kgf-m, 29.0 lb-ft) and 58 N·m (5.8 kgf-m, 42.0 lb-ft) by the specified procedure. |
| 3. Crankshaft | 11. Water pump | (b) : Tighten 26 N·m (2.6 kgf-m, 19.0 lb-ft) by the specified procedure. |
| 4. O-ring | 12. Heater outlet pipe | (c) : 70 N·m (7.0 kgf-m, 51.0 lb-ft) |
| 5. Oil pump chain | 13. CKP sensor | (d) : 11 N·m (1.1 kgf-m, 8.0 lb-ft) |
| 6. Main bearing<br>: Do not apply engine oil between cylinder block and bearing, between lower crankcase and bearing. Upper half of bearing has an oil groove. | 14. Crankcase bolt (10 mm thread diameter) | (e) : 23 N·m (2.3 kgf-m, 17.0 lb-ft) |
| 7. Thrust bearing | 15. Crankcase bolt (8 mm thread diameter) | : Do not reuse. |
| 8. Rear oil seal | 16. Flywheel mounting bolt | OIL : Apply engine oil to inside / sliding surface. |

## Main Bearings, Crankshaft and Cylinder Block Removal and Installation

S5JB0A1426041

### Removal

1) Remove engine assembly from vehicle. Refer to “Engine Assembly Removal and Installation: For J20 Engine”.
2) Remove clutch and flywheel (drive plate for A/T) by using special tool.

**Special tool**
**(A): 09924–17810**

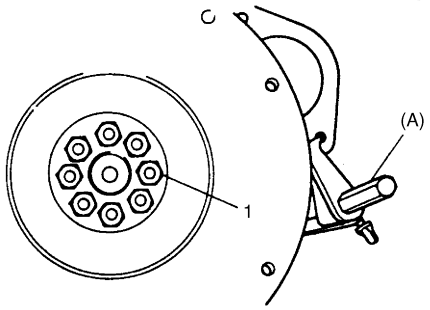


I2RH01140169-01

1. Flywheel bolt

3) Remove pistons and connecting rods referring to “Pistons, Piston Rings, Connecting Rods and Cylinders Removal and Installation: For J20 Engine”.
4) Remove CKP sensor (1).

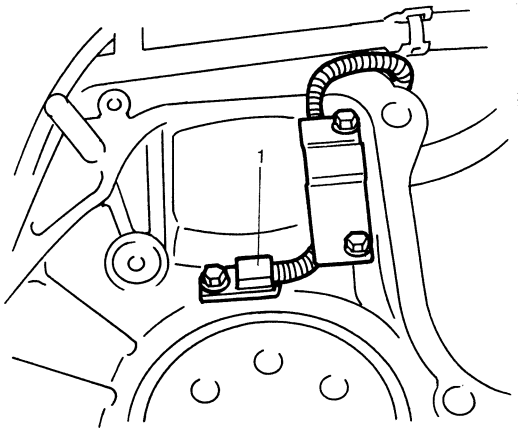


I2RH01140170-01

5) Remove water pump (1) and heater outlet pipe.
6) Remove engine front mounting brackets (2).

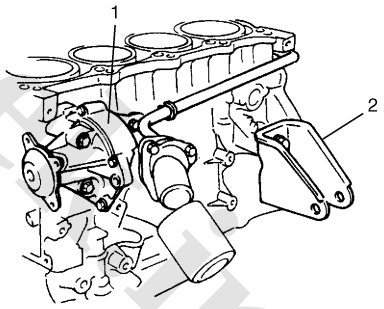


I2RH01140171-01

www.cargeek.ir

 www.CarGeek.ir

7) Loosen crankcase bolts, in sequence shown in figure and remove them.

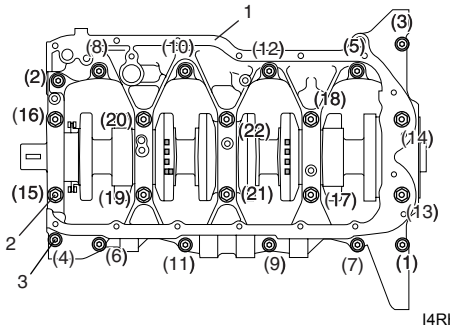


I4RH01140045-01

| | |
|---|---|
| 1. | Lower crankcase |
| 2. | Crankcase bolts (10 mm thread diameter) |
| 3. | Crankcase bolts (8 mm thread diameter) |

8) Remove crankshaft from cylinder block.

## Installation

**NOTE**

- **All parts to be installed must be perfectly clean.**
- **Be sure to oil crankshaft journals, journal bearings, thrust bearings, crankpins, connecting rod bearings, pistons, piston rings and cylinder bores.**
- **Journal bearings, crankcase (bearings caps), connecting rods, rod bearings, rod bearing caps, pistons and piston rings are in combination sets. Do not disturb combination and try to see that each part goes back to where it came from, when installing.**
- **Clean mating surface of cylinder block and lower crankcase, remove oil, old sealant and dust from mating surface.**

1) Fit main bearings to cylinder block (1).
One of two halves of main bearing (4) has oil groove (3).
Install this half with oil groove to cylinder block and another half without oil groove to lower crankcase.
Make sure that two halves are painted in the same color.
2) Install new O-ring (2) to cylinder block.
3) Install knock pins (5) to cylinder block.

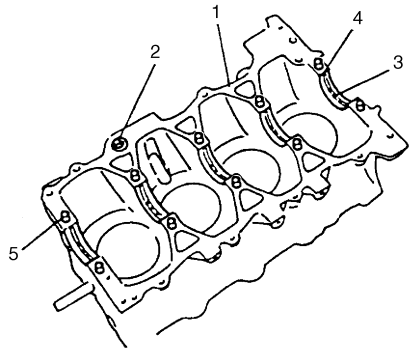


I4RH01140055-01

4) Fit thrust bearings (1) to cylinder block between No.2 and No.3 cylinders. Face oil groove (2) sides to crank webs.
5) Confirm that dowel pins (3) are installed to cylinder block.

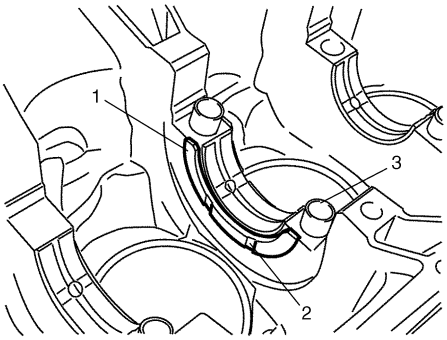


I5JB0A142057-01

6) Put crankshaft (1) with oil pump chain to cylinder block.

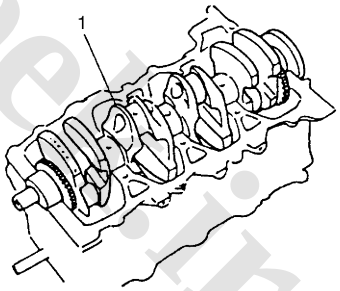


I2RH01140175-01

7) Apply sealant “A” to lower crankcase (1) mating surface area as shown in figure.

**“A”: Water tight sealant 99000–31250 (SUZUKI Bond No.1207F)**

**<u>Sealant amount for lower crankcase</u>**
**Width “a”: 3 mm (0.12 in.)**
**Height “b”: 2 mm (0.08 in.)**

www.cargeek.ir

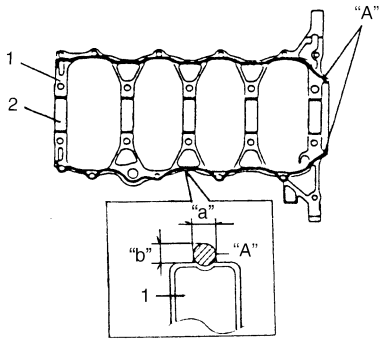


I2RH01140176-01

| 2. Bearing |
|---|

8) Install lower crankcase (1) to cylinder block.
After applying engine oil to all crankcase bolts ((1) – (22)), tighten them gradually as follows.
   a) Tighten bolts ((1) – (10)) to 30 N·m (3.0 kgf-m, 21.5 lb-ft) according to numerical order as shown.
   b) Tighten bolts ((1) – (10)) to 42 N·m (4.2 kgf-m, 30.5 lb-ft) according to numerical order as shown.
   c) In the same manner as in step a), tighten them to the specified torque.
   d) Tighten bolts ((11) – (22)) to the specified torque according to numerical order as shown.

**Tightening torque**
**Crankcase bolt with 10 mm thread diameter ((1) – (10)): Tighten 40 N·m (4.0 kgf-m, 29.0 lb-ft), 0 N·m (0 kgf-m, 0 lb-ft), 40 N·m (4.0 kgf-m, 29.0 lb-ft) and 58 N·m (5.8 kgf-m, 42.0 lb-ft) by the specified procedure.**
**Crankcase bolt with 8 mm thread diameter ((11) – (22)): Tighten 26 N·m (2.6 kgf-m, 19.0 lb-ft) by the specified procedure.**

**NOTE**

- **After tightening crankcase bolts, check to be sure that crankshaft rotates smoothly when turned by hand.**
- **Use new crankcase bolt (10 mm thread diameter).**

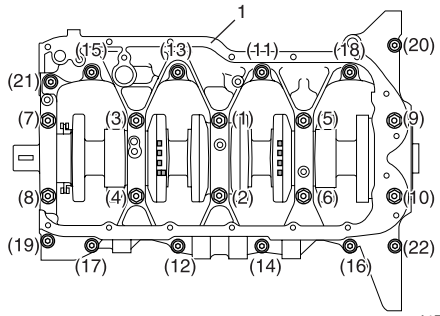


I4RH01140046-01

9) Pull out dowel pin (2) from crankshaft (1) and then install rear oil seal (3) by using special tools and plastic hammer.

**Special tool**
**(A): 09911–97710**
**(B): 09911–97811**

10) Install dowel pin (2).

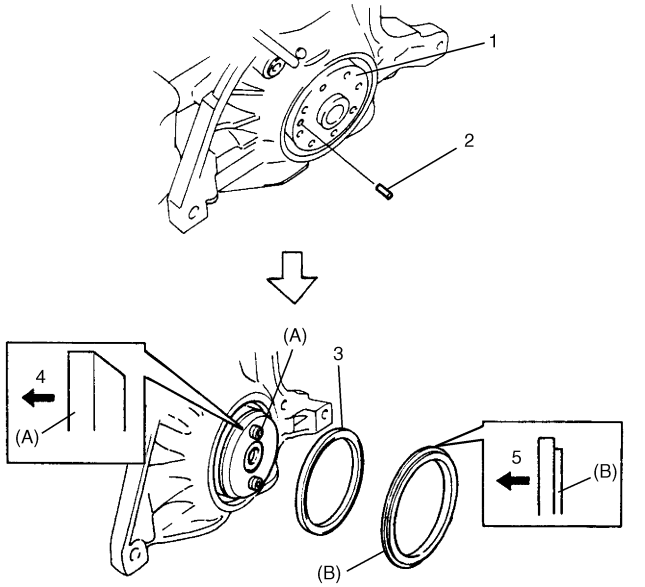


I5JB0A142058-01

| 4. Crankshaft side | 5. Oil seal side |
|---|---|

11) Install CKP sensor (1) and fix its wire harness with bracket.

**Tightening torque**
**CKP sensor bolt (a): 11 N·m (1.1 kgf-m, 8.0 lb-ft)**

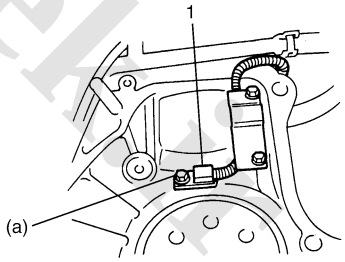


I2RH01140179-01

www.cargeek.ir

 www.CarGeek.ir

12) Install flywheel (drive plate for A/T).
Using special tool, lock flywheel or drive plate, and tighten flywheel or drive plate bolts (1) applied with sealant to specification.

**Special tool**
**(A): 09924–17810**

**Tightening torque**
**Flywheel bolt (a): 70 N·m (7.0 kgf-m, 51.0 lb-ft)**
**Drive plate bolt: 65 N·m (6.5 kgf-m, 47.0 lb-ft)**

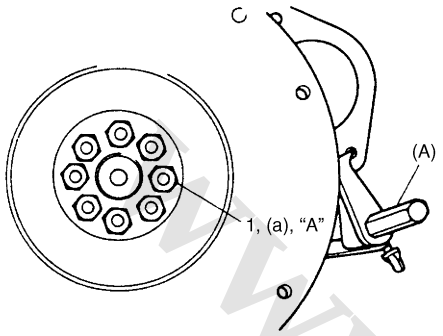


I2RH01140180-01

13) Install engine front mounting brackets (1). Tighten bracket bolts to specified torque.

**Tightening torque**
**Engine front mounting bracket bolt (a): 55 N·m ( 5.5 kgf-m, 40.0 lb-ft)**

14) Install water pump (2) and heater outlet pipe (3). Refer to "Water Pump Removal and Installation (For J20 Engine Model): in Section 1F".

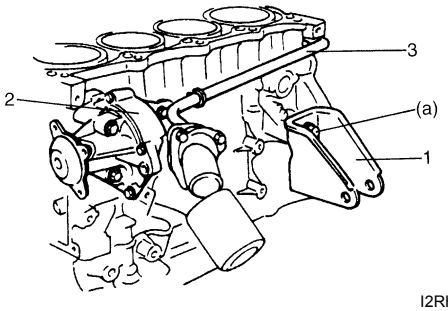


I2RH01140181-01

15) Install pistons and connecting rods. Refer to "Pistons, Piston Rings, Connecting Rods and Cylinders Removal and Installation: For J20 Engine".
16) Install oil pump. Refer to "Oil Pump Removal and Installation: For J20 Engine in Section 1E".
17) Install cylinder head assembly to cylinder. Refer to "Valves and Cylinder Head Removal and Installation: For J20 Engine".
18) Install, timing chain sprockets, timing chains, timing chain tensioner, tensioner adjusters, timing chain guides, timing chain cover, crankshaft pulley, water pump pulley. Refer to "Timing Chain Cover Removal and Installation: For J20 Engine", "2nd Timing Chain and Chain Tensioner Removal and Installation: For J20 Engine" and "1st Timing Chain and Chain Tensioner Removal and Installation: For J20 Engine".
19) Install oil pump strainer and oil pan referring to "Oil Pan and Oil Pump Strainer Removal and Installation: For J20 Engine in Section 1E".
20) Install clutch to flywheel (for M/T vehicle). For clutch installation, refer to "Clutch Cover, Clutch Disc and Flywheel Removal and Installation: in Section 5C".
21) Install engine assembly to vehicle. Refer to "Engine Assembly Removal and Installation: For J20 Engine".

## Main Bearings, Crankshaft and Cylinder Block Inspection

S5JB0A1426042

### Crankshaft

**Crankshaft runout**
Using a dial gauge, measure runout at center journal. Rotate crankshaft slowly. If runout exceeds its limit, replace crankshaft.

**Limit on runout**
**0.06 mm (0.0023 in.)**

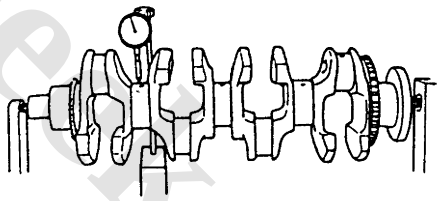

I2RH01140182-01

www.cargeek.ir

**Crankshaft thrust play**

Measure this play with crankshaft set in cylinder block in the normal manner, that is, with thrust bearing and lower crankcase installed. Tighten crankcase bolts referring to “Main Bearings, Crankshaft and Cylinder Block Removal and Installation: For J20 Engine”.

Use a dial gauge to read displacement in axial (thrust) direction of crankshaft.

If its limit is exceeded, replace thrust bearing with new standard one or oversize one to obtain standard thrust play.

**Crankshaft Thrust Play**

**Standard: 0.10 – 0.35 mm (0.0039 – 0.0137 in.)**

**Limit: 0.42 mm (0.0149 in.)**

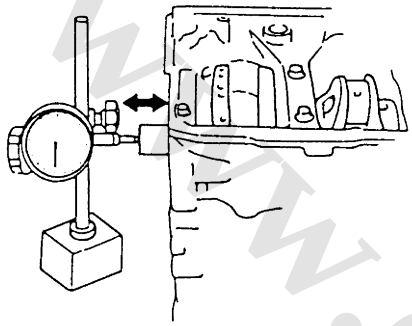

I2RH01140183-01

**Thickness of crankshaft thrust bearing**

| | |
|---|---|
| **Standard** | **2.500 mm (0.0984 in.)** |
| **Oversize: 0.125 mm (0.0049 in.)** | **2.563 mm (0.1009 in.)** |

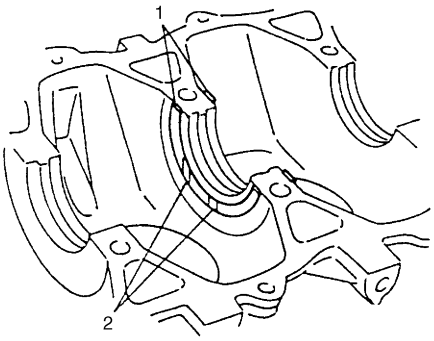


I2RH01140184-01

| | |
|---|---|
| 1. Thrust bearing | 2. Oil groove |

**Out-of-round and taper (uneven wear) of journals**

An unevenly worn crankshaft journal shows up as a difference in diameter at a cross section or along its length (or both). This difference, if any, is determined by taking micrometer readings. If any one of journals is badly damaged or if amount of uneven wear in the sense exceeds its limit, regrind or replace crankshaft.

**Limit on out-of-round and taper**

**0.01 mm (0.0004 in.)**

**Out-of-round**

**“A” – “B”**

**Taper**

**“a” – “b”**

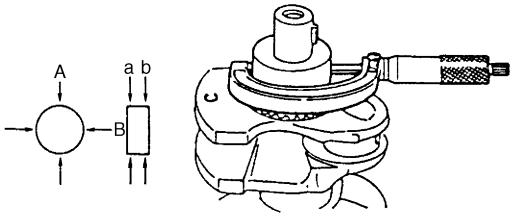


I2RH01140185-01

**Main Bearings**

**Main bearings general information**

- Service main bearings are available in standard size and 0.25 mm (0.0098 in.) undersize, and standard size has 5 kinds of bearings differing in tolerance.
- Upper half of bearing (1) has oil groove (2) as shown in figure.
  Install this half with oil groove to cylinder block.
- Lower half of bearing does not have oil groove.

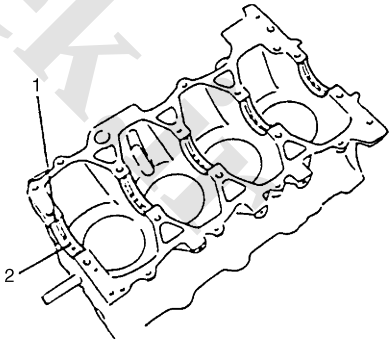


I2RH01140186-01

**Main bearings inspection**

Check bearings for pitting, scratches, wear or damage. If any malcondition is found, replace both upper and lower halves. Never replace either half without replacing the other half.

www.cargeek.ir

 www.CarGeek.ir

**Main bearing clearance**

Check clearance by using gauging plastic according to the following procedure.

1) Remove lower crankcase.
2) Clean bearings and main journals.
3) Place a piece of gauging plastic (1) to full width of bearing (parallel to crankshaft) on journal, avoiding oil hole.

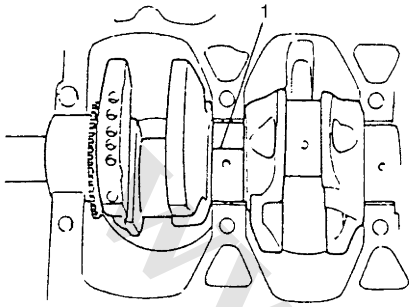


I2RH01140187-01

4) Install lower crankcase to cylinder block referring to “Main Bearings, Crankshaft and Cylinder Block Removal and Installation: For J20 Engine”.

**NOTE**

**Do not rotate crankshaft while gauging plastic is installed.**

5) Remove lower crankcase and using scale (2) on gauging plastic envelop (1), measure gauging plastic width at its widest point. If clearance exceeds its limit, replace bearing. Always replace both upper and lower inserts as a unit.
A new standard bearing may produce proper clearance. If not, it will be necessary to regrind crankshaft journal for use of 0.25 mm undersize bearing.
After selecting new bearing, recheck clearance.

**Main Bearing Clearance**

**Standard: 0.032 – 0.050 mm (0.0013 – 0.0019 in.)**
**Limit: 0.063 mm (0.0024 in.)**

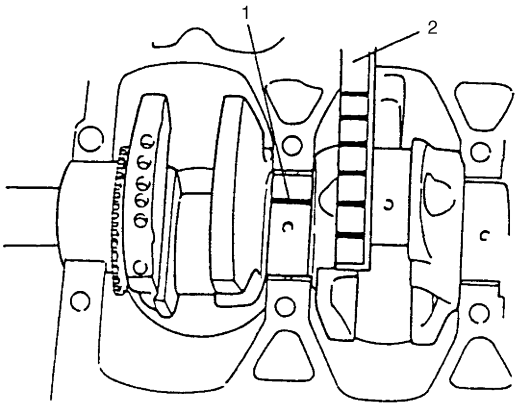


I2RH01140188-01

**Selection of main bearings**

**STANDARD BEARING:**

If engine is under the following conditions, select a new standard bearing as followings and install it.

- Bearing is in malcondition.
- Bearing clearance is cut of specification.
- Crankshaft or cylinder block is replaced.

1) First check journal diameter. As shown in figure, crank web No.2 has stamped numbers.
Six kinds of numbers (“4” through “9”) represent the following journal diameters.

**Journal diameter**

| Stamped numbers | Journal diameter |
|---|---|
| 4 | 58.0030 – 58.0060 mm (2.28358 – 2.28369 in.) |
| 5 | 58.0000 – 58.0029 mm (2.28346 – 2.28357 in.) |
| 6 | 57.9970 – 57.9999 mm (2.28334 – 2.28345 in.) |
| 7 | 57.9940 – 57.9969 mm (2.28323 – 2.28333 in.) |
| 8 | 57.9910 – 57.9939 mm (2.28311 – 2.28322 in.) |
| 9 | 57.9880 – 57.9909 mm (2.28299 – 2.28310 in.) |

Stamped numbers on crank web No.2 (3) represent journal diameters marked with an arrow in figure respectively. For example, stamped number “5” indicates that corresponding journal diameter is 58.0000 – 58.0029 mm (2.28346 – 2.28357 in.).

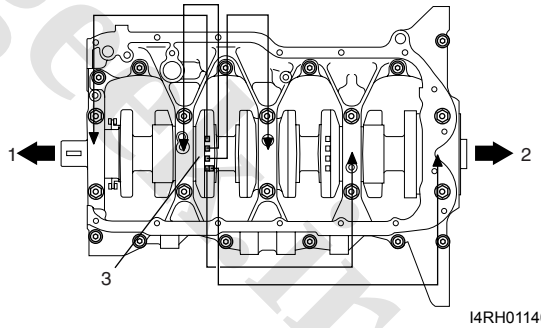


I4RH01140047-01

| | |
|---|---|
| 1. Crankshaft pulley side | 2. Flywheel side |

www.cargeek.ir

2) Next, check journal bore diameter. On lower crankcase five alphabets are stamped as shown in figure.
Three kinds of alphabets (“A”, “B” and “C”) represent the following journal bore diameters.

**Journal bore diameter**

| Stamped alphabet | Journal bore diameter |
|---|---|
| A | 62.0000 – 62.0060 mm (2.44094 – 2.44117 in.) |
| B | 62.0061 – 62.0120 mm (2.44118 – 2.44141 in.) |
| C | 62.0121 – 62.0180 mm (2.44142 – 2.44164 in.) |

Stamped alphabets on lower crankcase represent journal diameter marked with an arrow in figure respectively.
For example, stamped alphabet “A” at No.2 journal indicates that (journal) bore diameter of No.2 journal is 62.0000 – 62.0060 mm (2.44094 – 2.44117 in.).

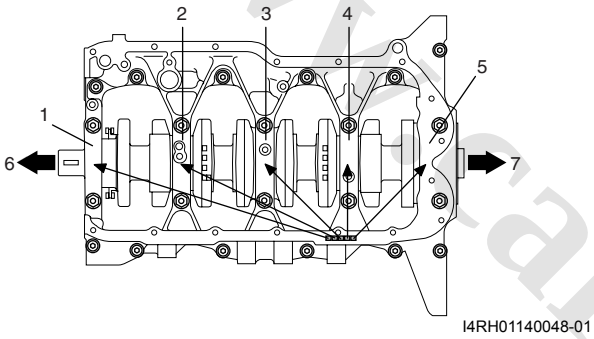

I4RH01140048-01

| | |
|---|---|
| 1. No.1 journal | 5. No.5 journal |
| 2. No.2 journal | 6. Crankshaft pulley side |
| 3. No.3 journal | 7. Flywheel side |
| 4. No.4 journal | |

3) There are 5 kinds of standard bearings differing in thickness. To distinguish them, they are painted (1) in the following colors at the position as indicated in figure.
Each color indicates the following thickness at the center of bearing.

**Standard size main bearing thickness**

| Color painted | Bearing thickness |
|---|---|
| Green | 1.9910 – 1.9940 mm (0.07839 – 0.07850 in.) |
| Black | 1.9940 – 1.9970 mm (0.07851 – 0.07862 in.) |
| Colorless (no painted) | 1.9970 – 2.0000 mm (0.07863 – 0.07874 in.) |
| Yellow | 2.0000 – 2.0030 mm (0.07874 – 0.07885 in.) |
| Blue | 2.0030 – 2.0060 mm (0.07886 – 0.07897 in.) |

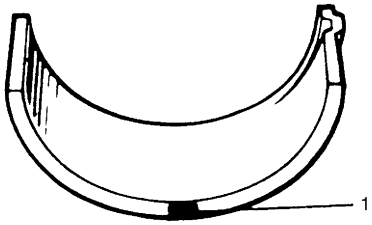

I2RH01140191-01

www.cargeek.ir

 www.CarGeek.ir

4) From number stamped on crank web No.2 and alphabets stamped on lower crankcase, determine new standard bearing to be installed to journal by referring to table shown.
For example, if number stamped on crank web No.2 is “5” and alphabet stamped on lower crankcase is “A”, install new standard bearings painted in “Green” to cylinder block side journal and “Black” to lower crankcase side journal.

**NOTE**

**The meaning of “Upper” and “Lower” described in below table are the following.**

- **Upper: It is instruction of main bearing installed in cylinder block side journal.**
- **Lower: It is instruction of main bearing installed in lower crankcase side journal.**

**Main bearing cross-reference table (new standard bearing)**

| | | Standard number on crank web No.2 | | | | | |
|---|---|---|---|---|---|---|---|
| | | 4 | 5 | 6 | 7 | 8 | 9 |
| Standard alphabet on lower crankcase | A | Green | Upper: Green<br>Lower: Black | Black | Upper: Black<br>Lower: Colorless | Colorless | Upper: Colorless<br>Lower: Yellow |
| | B | Black | Upper: Black<br>Lower: Colorless | Colorless | Upper: Colorless<br>Lower: Yellow | Yellow | Upper: Yellow<br>Lower: Blue |
| | C | Colorless | Upper: Colorless<br>Lower: Yellow | Yellow | Upper: Yellow<br>Lower: Blue | Blue | Blue |

5) Check main bearing clearance with newly selected standard bearing referring to “Main Bearing Clearance”.
If clearance still exceeds its limit, use next thicker bearing and recheck clearance.

**UNDERSIZE BEARING (0.25 mm):**

- 0.25 mm undersize bearing is available, in five kinds varying in thickness.
To distinguish them, each bearing is painted (1) in the following colors at such position as indicated in figure.
Each color represents the following thickness at the center of bearing.

**Undersize main bearing thickness**

| Color painted | Bearing thickness |
|---|---|
| Green & Red | 2.1160 – 2.1190 mm (0.08331 – 0.08342 in.) |
| Black & Red | 2.1190 – 2.1220 mm (0.08343 – 0.08354 in.) |
| Red only | 2.1220 – 2.1250 mm (0.08355 – 0.08366 in.) |
| Yellow & Red | 2.1250 – 2.1280 mm (0.08367 – 0.08377 in.) |
| Blue & Red | 2.1280 – 2.1310 mm (0.08378 – 0.08389 in.) |

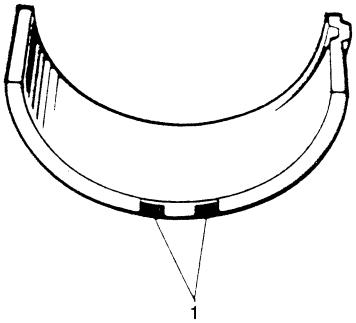


I2RH01140192-01

www.cargeek.ir

- If necessary, regrind crankshaft journal and select under-size bearing to use with it as follows.
  a. Regrind journal to the following finished diameter.

     **Finished journal diameter**
     **57.7380 – 57.7560 mm (2.27315 – 2.27385 in.)**

  b. Using micrometer, measure reground journal diameter.
     Measurement should be taken in two directions perpendicular to each other in order to check for out-of-round.
  c. Using journal diameter measured and alphabets stamped on lower crankcase, select an undersize bearing by referring to the following table.
     Check bearing clearance with newly selected undersize bearing.

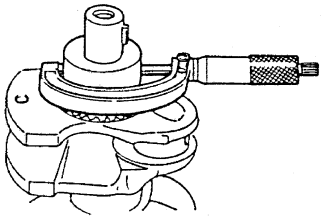

I2RH01140193-01

**Undersize bearing specification**

| | | Measured journal diameter | | |
|---|---|---|---|---|
| | | 57.7500 – 57.7560 mm (2.27362 – 2.27385 in.) | 57.7440 – 57.7499 mm (2.27338 – 2.27361 in.) | 57.7380 – 57.7439 mm (2.27315 – 2.27337 in.) |
| Alphabets stamped on lower crankcase | A | Green & Red | Black & Red | Red only |
| | B | Black & Red | Red only | Yellow & Red |
| | C | Red only | Yellow & Red | Blue & Red |

**Crankshaft Position Sensor Plate**
Check teeth of plate for damage.
If any damage is found, replace crankshaft (1).

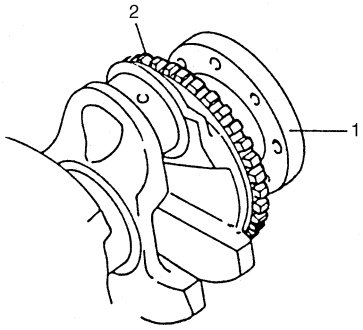


I2RH01140194-01

2. Crankshaft position sensor plate

**Oil Pump Sprocket**
Check teeth of sprocket for wear or damage.
If any damage or wear is found, replace crankshaft (1).

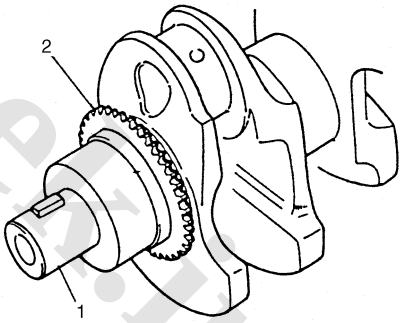


I2RH01140195-01

2. Oil pump sprocket

www.cargeek.ir

 www.CarGeek.ir

**Oil Pump Chain**

Check oil pump chain for wear or damage.

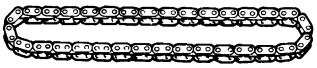

I2RH01140196-01

**Flywheel**

- If ring gear is damaged, cracked or worn, replace flywheel.
- If the surface contacting clutch disc is damaged, or excessively worn, replace flywheel.
- Check flywheel for face runout with a dial gauge. If runout exceeds its limit, replace flywheel.

**Limit on runout**
**0.2 mm (0.0078 in.)**

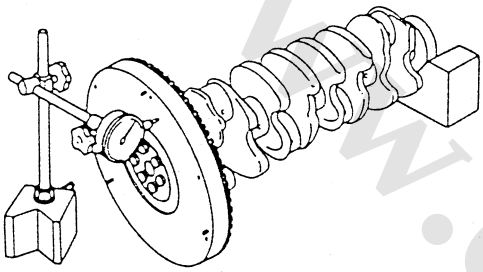

I2RH01140198-01

**Cylinder Block**

- Distortion of gasketed surface
- Using straightedge and thickness gauge, check gasketed surface for distortion and, if flatness exceeds its limit, correct It.

**Flatness Limit**
**0.06 mm (0.0024 in.)**

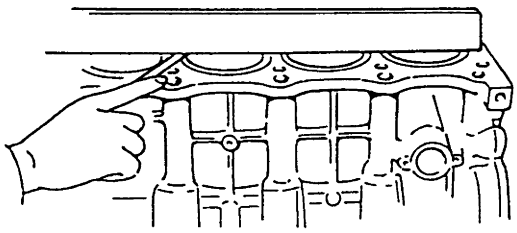

I2RH01140199-01

**Honing or reboring cylinders**

1) When any cylinder needs reboring, all other cylinders must also be rebored at the same time.

**Oversize piston specification**

| Size | Piston diameter |
|---|---|
| STD | 83.970 – 83.990 mm (3.3059 – 3.3067 in.) |
| O/S 0.50 | 84.470 – 84.490 mm (3.3256 – 3.3264 in.) |

2) Using micrometer, measure piston diameter.
3) Calculate cylinder bore diameter to be rebored as follows.
   D = A + B – C
   D: Cylinder bore diameter to be rebored.
   A: Piston diameter as measured.
   B: Piston clearance = 0.02 – 0.04 mm (0.0008 – 0.0015 in.)
   C: Allowance for honing = 0.02 mm (0.0008 in.)
4) Rebore and hone cylinder to calculated dimension.

**NOTE**

**Before reboring, install lower crankcase and tighten to specification to avoid distortion of bearing bores.**

5) Measure piston clearance after honing.

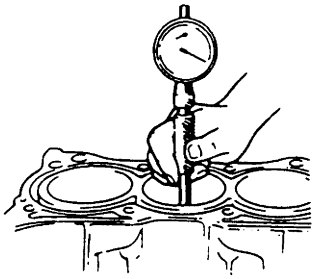

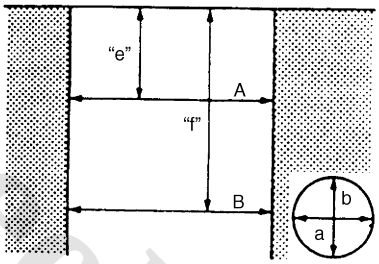


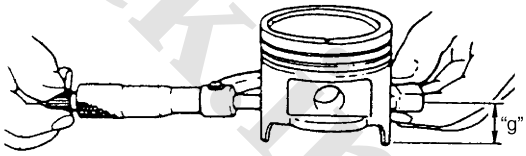


I5JB0A142059-01

| | |
|---|---|
| "e": 50 mm (1.96 in.) | "g": 26.5 mm (1.04 in.) |
| "f": 95 mm (3.74 in.) | |

**Check Valve**

Check check valve for clogging and ball for being stuck.

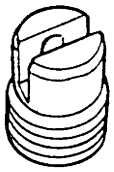

I2RH01140201-01

www.cargeek.ir

# Specifications

## Tightening Torque Specifications

S5JB0A1427001

| Fastening part | Tightening torque | | | Note |
|---|---|---|---|---|
| | N·m | kgf-m | lb-ft | |
| Camshaft housing bolts | 11 N·m (1.1 kgf-m, 8.0 lb-ft) for tightening of special tool | | | ☞ |
| Camshaft housing bolt | 11 | 1.1 | 8.0 | ☞ / ☞ / ☞ |
| Cylinder head cover nut | 11 | 1.1 | 8.0 | ☞ |
| Starting motor terminal nut | 11 | 1.1 | 8.0 | ☞ |
| Generator terminal nut | 7 | 0.7 | 5.0 | ☞ |
| Timing chain cover bolt and nut | 11 | 1.1 | 8.0 | ☞ |
| Idler pulley nut | 42 | 4.2 | 30.5 | ☞ |
| Generator belt tensioner bolt | 25 | 2.5 | 18.5 | ☞ |
| Crankshaft pulley bolt | 150 | 15.0 | 108.5 | ☞ |
| Camshaft timing sprocket bolt | 80 | 8.0 | 57.5 | ☞ |
| Timing chain tensioner adjuster No.2 bolt | 11 | 1.1 | 8.0 | ☞ |
| Timing chain tensioner adjuster No.2 nut | 45 | 4.5 | 33.0 | ☞ |
| Timing chain tensioner nut | 25 | 2.5 | 18.0 | ☞ |
| Timing chain tensioner adjuster No.1 bolt | 11 | 1.1 | 8.0 | ☞ |
| Timing chain guide No.1 bolt | 9 | 0.9 | 6.5 | ☞ |
| Cylinder head bolt (M10) | Tighten 52 N·m (5.2 kgf-m, 38.0 lb-ft), 82 N·m (8.2 kgf-m, 59.5 lb-ft), 0 N·m (0 kgf-m, 0 lb-ft), 52 N·m (5.2 kgf-m, 38.0 lb-ft) and 103 N·m (10.3 kgf-m, 74.5 lb-ft) by the specified procedure. | | | ☞ |
| Cylinder head bolt (M6) | 11 | 1.1 | 8.0 | ☞ |
| Connecting rod bolt | Tighten 15 N·m (1.5 kgf-m, 11.0 lb-ft), 45° and 45° by the specified procedure. | | | ☞ / ☞ |
| Crankcase bolt with 10 mm thread diameter ((1) – (10)) | Tighten 40 N·m (4.0 kgf-m, 29.0 lb-ft), 0 N·m (0 kgf-m, 0 lb-ft), 40 N·m (4.0 kgf-m, 29.0 lb-ft) and 58 N·m (5.8 kgf-m, 42.0 lb-ft) by the specified procedure. | | | ☞ |
| Crankcase bolt with 8 mm thread diameter ((11) – (22)) | Tighten 26 N·m (2.6 kgf-m, 19.0 lb-ft) by the specified procedure. | | | ☞ |
| CKP sensor bolt | 11 | 1.1 | 8.0 | ☞ |
| Flywheel bolt | 70 | 7.0 | 51.0 | ☞ |
| Drive plate bolt | 65 | 6.5 | 47.0 | ☞ |
| Engine front mounting bracket bolt | 55 | 5.5 | 40.0 | ☞ |

**NOTE**

**The specified tightening torque is also described in the following.**
**“Engine Mountings Components: For J20 Engine”**
**“Timing Chain Cover Components: For J20 Engine”**
**“2nd Timing Chain and Chain Tensioner Components: For J20 Engine”**
**“1st Timing Chain and Chain Tensioner Components: For J20 Engine”**
**“Camshafts, Tappet and Shim Components: For J20 Engine”**
**“Valves and Cylinder Head Components: For J20 Engine”**
**“Pistons, Piston Rings, Connecting Rods and Cylinders Components: For J20 Engine”**
**“Main Bearings, Crankshaft and Cylinder Block Components: For J20 Engine”**

**Reference:**
For the tightening torque of fastener not specified in this section, refer to “Fastener Information: in Section 0A”.

www.cargeek.ir

 www.CarGeek.ir

# Special Tools and Equipment

## Recommended Service Material

S5JB0A1428001

| Material | SUZUKI recommended product or Specification | | Note |
|---|---|---|---|
| Water tight sealant | SUZUKI Bond No.1207B | P/No.: 99000–31140 | ☞ |
| | SUZUKI Bond No.1207F | P/No.: 99000–31250 | ☞ / ☞ / ☞ |

**NOTE**

**Required service material is also described in the following.**
**“Timing Chain Cover Components: For J20 Engine”**
**“2nd Timing Chain and Chain Tensioner Components: For J20 Engine”**
**“1st Timing Chain and Chain Tensioner Components: For J20 Engine”**
**“Camshafts, Tappet and Shim Components: For J20 Engine”**
**“Valves and Cylinder Head Components: For J20 Engine”**
**“Pistons, Piston Rings, Connecting Rods and Cylinders Components: For J20 Engine”**
**“Main Bearings, Crankshaft and Cylinder Block Components: For J20 Engine”**

## Special Tool

S5JB0A1428002

| | |
|---|---|
| 09355–35754–600<br>Hose<br>☞ | 09367–04002<br>3-way joint<br>☞ 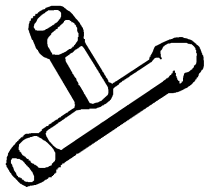 |
| 09911–97710<br>Oil seal guide<br>☞ 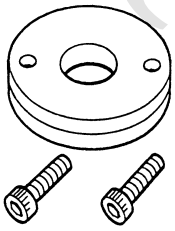 | 09911–97811<br>Oil seal installer<br>☞ 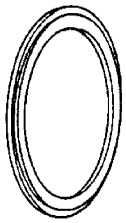 |
| 09913–75510<br>Bearing installer<br>☞ 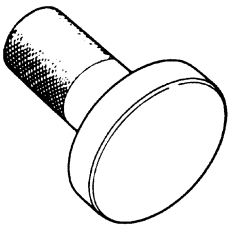 | 09915–64512<br>Compression gauge<br>☞ 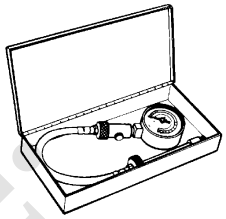 |
| 09915–64530<br>Compression gauge hose<br>☞ 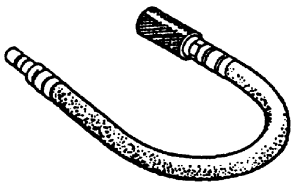 | 09915–67010<br>Compression gauge attachment (C)<br>☞ 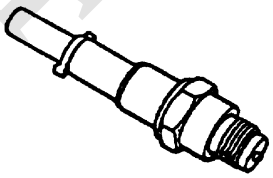 |
| 09915–67311<br>Vacuum gauge<br>☞ 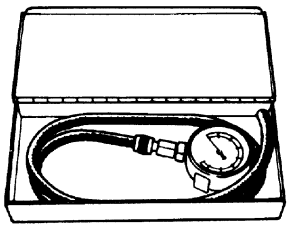 | 09916–14510<br>Valve lifter<br>☞ / ☞ 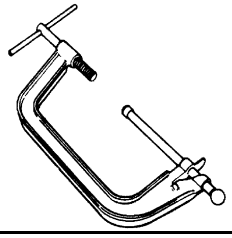 |

www.cargeek.ir

| | |
|---|---|
| 09916–16510<br>Valve lifter attachment<br>☞ / ☞ 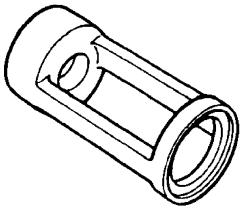 | 09916–34542<br>Reamer handle<br>☞ / ☞ 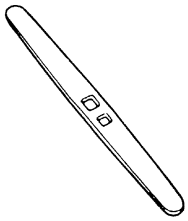 |
| 09916–37810<br>Valve guide reamer (6 mm)<br>☞ 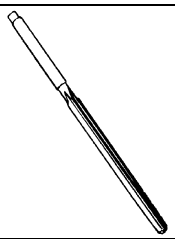 | 09916–38210<br>Valve guide reamer (11 mm)<br>☞ 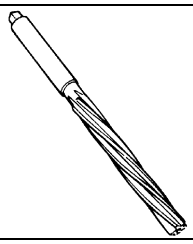 |
| 09916–46020<br>Valve guide remover<br>☞ | 09916–57340<br>Valve guide installer attachment<br>☞ 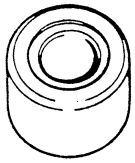 |
| 09916–57350<br>Valve guide installer handle (6 mm)<br>☞ / ☞ 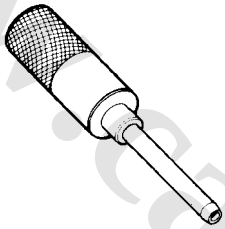 | 09916–66510<br>Tappet holder<br>☞ / ☞ 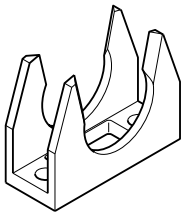 |
| 09916–77310<br>Piston ring compressor (50-125 mm)<br>☞ 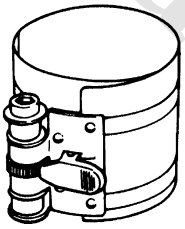 | 09916–84511<br>Forceps<br>☞ / ☞ 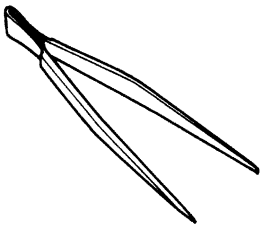 |
| 09917–68221<br>Camshaft pulley holder<br>☞ / ☞ 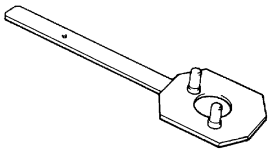 | 09917–98221<br>Valve guide stem attachment<br>☞ 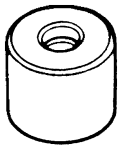 |
| 09918–08210<br>Vacuum gauge hose joint<br>☞ 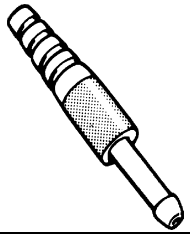 | 09919–28610<br>Protector sleeve<br>☞ / ☞ 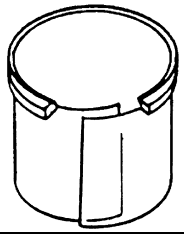 |
| 09924–17810<br>Flywheel holder (drive plate stopper)<br>☞ / ☞ 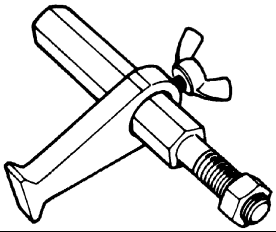 | 09926–58010<br>Bearing remover attachment<br>☞ 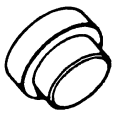 |

www.cargeek.ir

 www.CarGeek.ir

| | |
|---|---|
| 09944–36011<br>Steering wheel remover<br>☞ 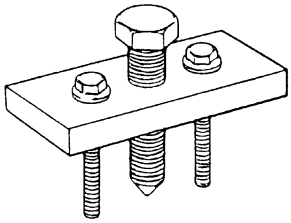 | |

www.cargeek.ir

www.cargeek.ir

www.CarGeek.ir


# Engine Lubrication System

## For M16A Engine with VVT

### General Description

#### Engine Lubrication Description

S5JB0A1511001

The oil pump is of a trochoid type, and mounted on the crankshaft. Oil is drawn up through the oil pump strainer and passed through the pump to the oil filter.
The filtered oil flows into two paths in cylinder block.
In one path, oil reaches the crankshaft journal bearings. Oil from the crankshaft journal bearings is supplied to the connecting rod bearings by means of intersecting passages drilled in the crankshaft, and then injected from the big end of connecting rod to lubricate piston, rings and cylinder wall.
In the other path oil goes up to the cylinder head and lubricates valves and camshafts, etc., after passing through the internal oilway of camshafts.
An oil relief valve is provided on the oil pump. This valve starts relieving oil pressure when the pressure exceeds specified pressure.

www.cargeek.ir

www.cargeek.ir

www.CarGeek.ir

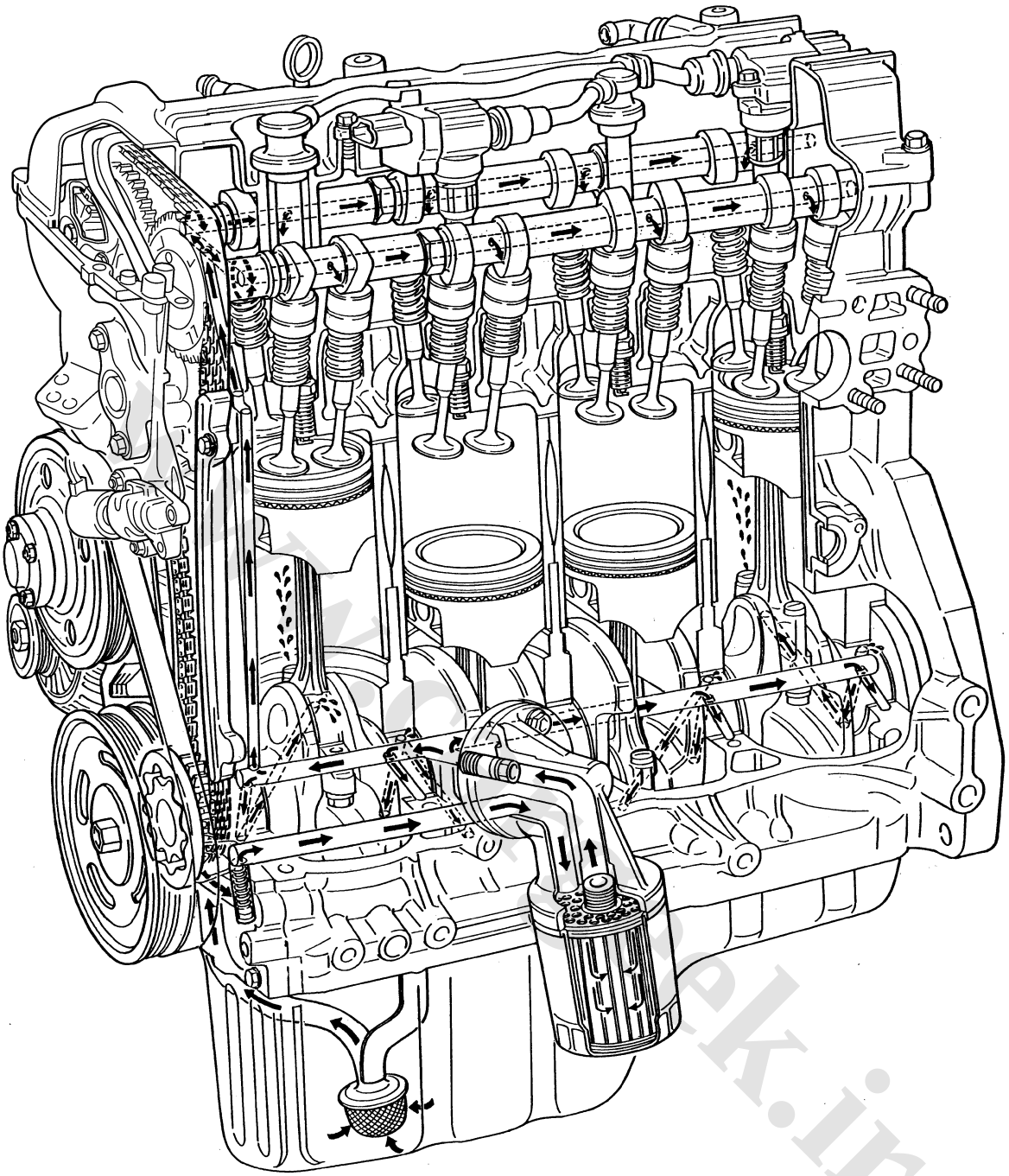

I3RH0B150001-01

www.cargeek.ir

www.CarGeek.ir


# Diagnostic Information and Procedures

## Oil Pressure Check

S5JB0A1514001

**NOTE**

**Prior to checking oil pressure, check the following.**

- **Oil level in oil pan**
  **If oil level is low, add oil up to Full level mark (hole) (1) on oil level gauge referring to "Engine Oil and Filter Change: in Section 0B".**

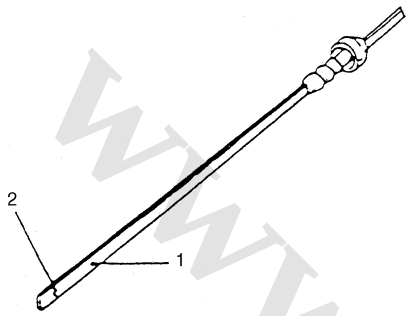


I2RH0B150002-01

| | |
|---|---|
| 2. | Low level mark (hole) |

- **Oil quality**
  **If oil is discolored or deteriorated, change it. For particular oil to be used, refer to "Engine Oil and Filter Change: in Section 0B".**
- **Oil leaks**
  **If leak is found, repair it.**

1) Disconnect oil pressure switch coupler (1).
2) Remove oil pressure switch (2) from cylinder block.

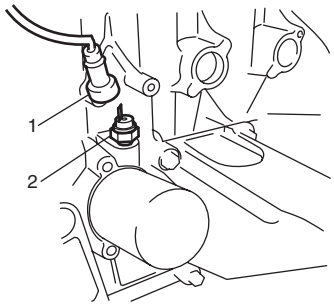


I5JB0A151001-01

3) Install special tools (oil pressure gauge) to vacated threaded hole of oil pressure switch.

**Special tool**
**(A): 09915–77310**
**(B): 09915–78211**

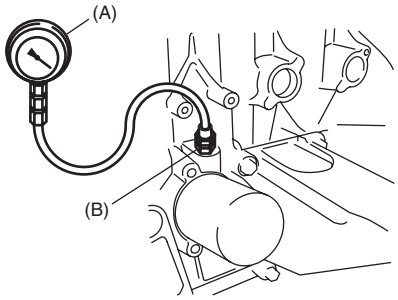


I5JB0A151002-01

4) Start engine and warm engine up to normal operating temperature.

**NOTE**

**Be sure to shift transaxle gear shift lever in "Neutral", set parking brake and block drive wheels.**

5) After warming up, raise engine speed to 4,000 min–[1]. and measure oil pressure.

**Oil pressure specification**
**More than 270 kPa (2.7 kg/cm$^2$, 39.8 psi) at 4,000 min–[1]. (rpm)**

6) After checking oil pressure, stop engine and remove oil pressure gauge and attachment.
7) Before reinstalling oil pressure switch (2), be sure to wrap its screw threads with sealing tape (1) and tighten switch to specified torque.

**NOTE**

**If sealing tape edge is bulged out from screw threads of switch, cut it off.**

**Tightening torque**
**Oil pressure switch (a): 13 N·m (1.3 kgf-m, 9.5 lb-ft)**

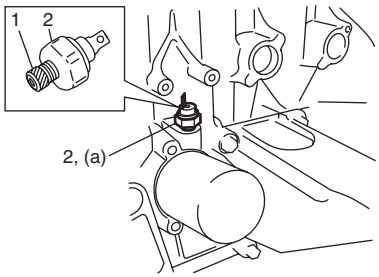


I5JB0A151004-01

www.cargeek.ir

www.CarGeek.ir

8) Start engine and check oil pressure switch for oil leakage. If oil leakage is found, repair it.
9) Connect oil pressure switch coupler (1).

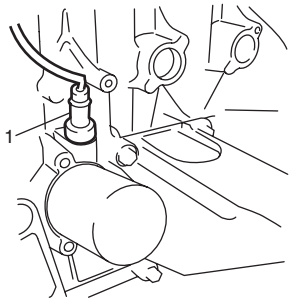


I5JB0A151003-01

# Repair Instructions

## Oil Pan and Oil Pump Strainer Components

S5JB0A1516001

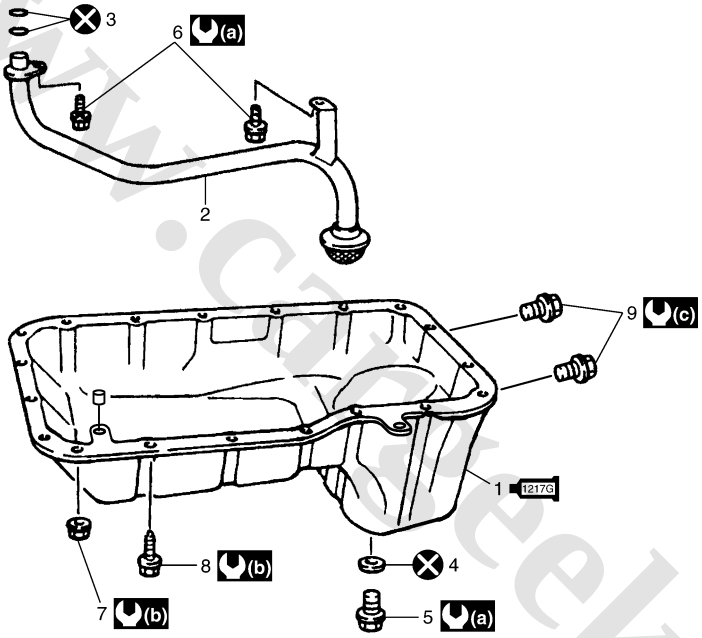


I5JB0A151005-01

| | | |
|---|---|---|
| 1217G 1. Oil pan<br>: Apply sealant 99000-31260 to mating surface. | 6. Strainer bolt | (b) : 11 N·m (1.1 kgf-m, 8.0 lb-ft) |
| 2. Strainer | 7. Oil pan nut | (c) : 85 N·m (8.5 kgf-m, 61.5 lb-ft) |
| 3. O-ring | 8. Oil pan bolt | ⊗ : Do not reuse. |
| 4. Gasket | 9. Transmission to engine bolt | |
| 5. Drain plug | (a) : 35 N·m (3.5 kgf-m, 25.5 lb-ft) | |

www.cargeek.ir

www.CarGeek.ir


## Oil Pan and Oil Pump Strainer Removal and Installation

S5JB0A1516002

### Removal

1) Remove oil level gauge.
2) Drain engine oil by removing drain plug.
3) Remove front suspension frame referring to “Front Suspension Frame, Stabilizer Bar and/or Bushings Removal and Installation: in Section 2B”.
4) Remove clutch housing lower plates (1).

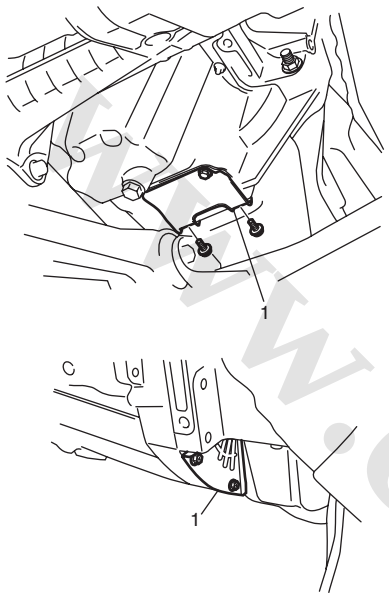


I5JB0A151006-01

5) Remove oil pan, and then oil pump strainer (1) from cylinder block.

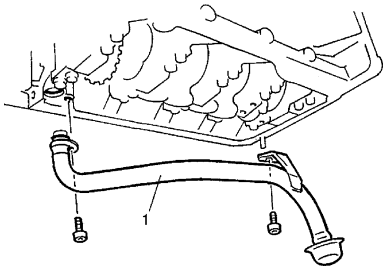


I5JB0A151007-01

### Installation

1) Install new O-rings (2) in the position as shown in the figure and install oil pump strainer (1).
   Tighten strainer bolt (3) to specified torque.

   **Tightening torque**
   **Oil pump strainer bolt (a): 11 N·m (1.1 kgf-m, 8.0 lb-ft)**

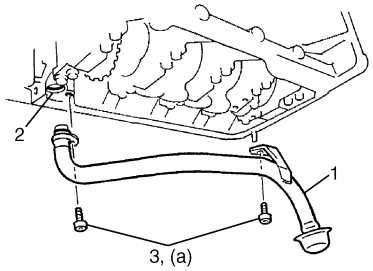


I5JB0A151008-01

2) Install dowel pin (1) to oil pan.

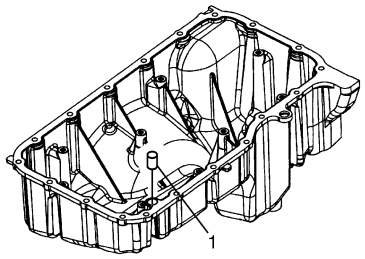


I5JB0A151009-01

3) Apply sealant continuously to oil pan mating surface as shown in the figure.

   **“A”: Sealant 99000–31260 (SUZUKI Bond No.1217G)**

   **<u>Sealant amount for oil pan</u>**
   **Width “a”: 3 mm (0.12 in.)**
   **Height “b”: 2 mm (0.08 in.)**

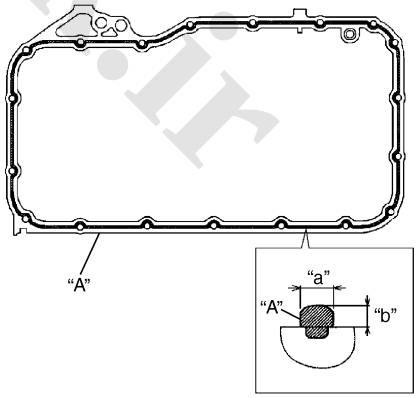


I4RS0A150006-01

www.cargeek.ir

www.CarGeek.ir

4) Install oil pan to cylinder block temporarily.
5) Insert knock pin (1) in hole (2) of oil pan in order to locate oil pan precisely.

**NOTE**

**Knock pin is available as a spare part (part number: 04211–13189).**

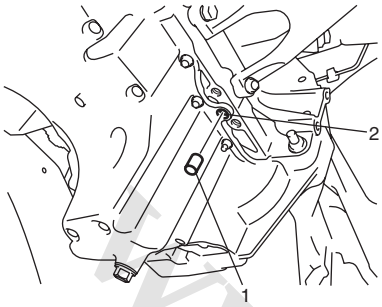

I5JB0A151010-01

6) After fitting oil pan to cylinder block, run in securing bolts and start tightening at the center: move wrench outward, tightening one bolt at a time. Tighten bolts and nuts to specified torque.

**Tightening torque**
**Oil pan bolt and nut (a): 11 N·m (1.1 kgf-m, 8.0 lb-ft)**

7) Install new gasket and drain plug to oil pan. Tighten drain plug to specified torque.

**Tightening torque**
**Oil pan drain plug (b): 35 N·m (3.5 kgf-m, 25.5 lb-ft)**

8) Tighten transmission to engine bolts to specified torque.

**Tightening torque**
**Transmission to engine bolt (c): 85 N·m (8.5 kgf-m, 61.5 lb-ft)**

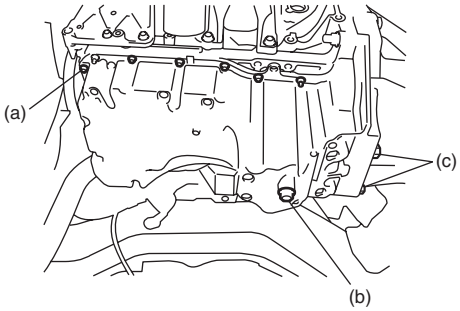

I5JB0A151011-01

9) Install clutch housing lower plate No.1 (1) and clutch housing lower plate No.2 (2).

**Tightening torque**
**Clutch housing lower plate No.1 bolt (a): 11 N·m (1.1 kgf-m, 8.0 lb-ft)**
**Clutch housing lower plate No.2 bolt (b): 11 N·m (1.1 kgf-m, 8.0 lb-ft)**

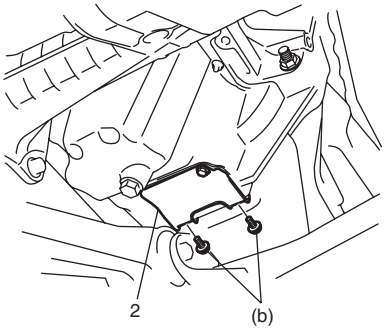


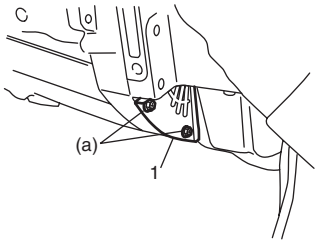

I5JB0A151012-03

10) Install front suspension frame referring to “Front Suspension Frame, Stabilizer Bar and/or Bushings Removal and Installation: in Section 2B”.
11) Install oil level gauge.
12) Refill engine with engine oil referring to “Engine Oil and Filter Change: in Section 0B”.
13) Verify that there is no engine oil leakage and exhaust gas leakage at each connection.

## Oil Pan and Oil Pump Strainer Cleaning

S5JB0A1516003

- Clean sealing surface between oil pan and cylinder block.
  Remove oil, old sealant, and dust from sealing surface.
- Clean oil pump strainer screen (1).

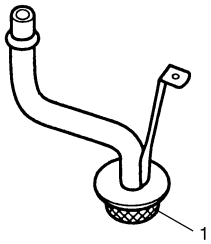

I2RH0B150016-01

www.cargeek.ir

www.CarGeek.ir


## Oil Pump Components

S5JB0A1516004

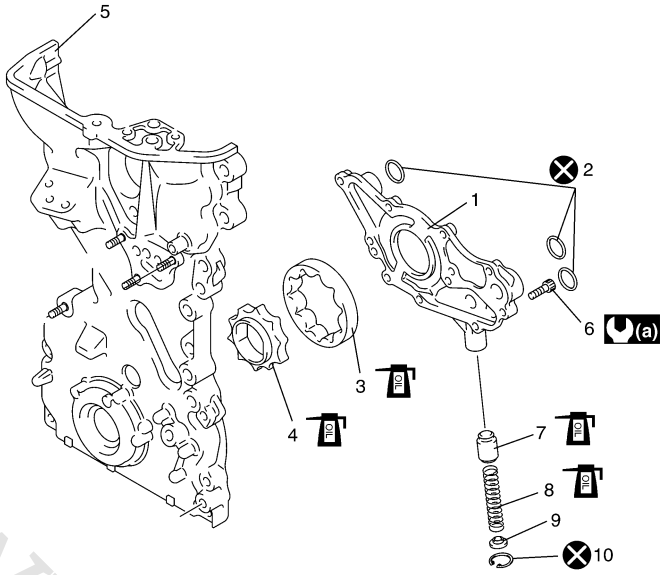


I4RS0A150010-01

| | | |
|---|---|---|
| 1. Rotor plate | 6. Rotor plate bolt | 10. Circlip |
| 2. O-ring | 7. Relief valve | (a) : 11 N·m (1.1 kgf-m, 8.0 lb-ft) |
| 3. Outer rotor | 8. Spring | ⊗ : Do not reuse. |
| 4. Inner rotor | 9. Retainer | : Apply thin coat of engine oil to sliding surface. |
| 5. Timing chain cover | 10. Circlip | |

## Oil Pump Removal and Installation

S5JB0A1516005

Oil pump is incorporated with timing chain cover.
For removal and installation, refer to “Timing Chain Cover Removal and Installation: For M16A Engine with VVT in Section 1D”.

## Oil Pump Disassembly and Reassembly

S5JB0A1516006

### Disassembly

1) Remove rotor plate (1) by removing its mounting bolts.

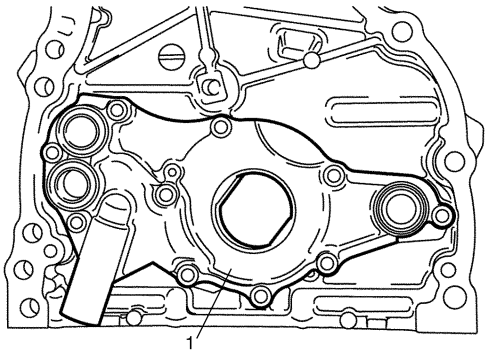


I2RH0B150018-01

2) Remove outer rotor (1) and inner rotor (2).

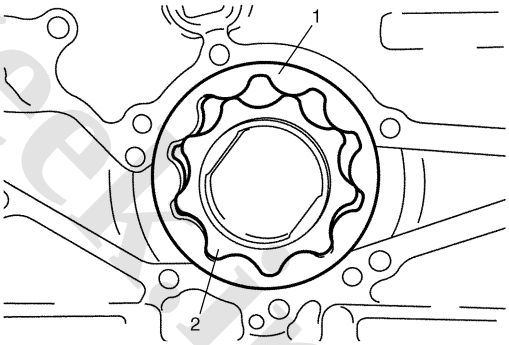


I2RH0B150019-01

3) Remove relief valve (1), spring (2) and retainer (3) by removing circlip (4).

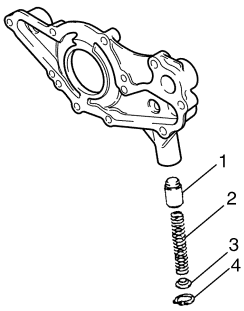


I2RH0B150020-01

www.cargeek.ir

www.CarGeek.ir

### Reassembly

1) Wash, clean and then dry all disassembled parts.
2) Apply thin coat of engine oil to inner and outer rotors, oil seal lip portion, inside surfaces of oil pump case and plate.
3) Install outer (1) and inner rotors (2) to oil pump case.

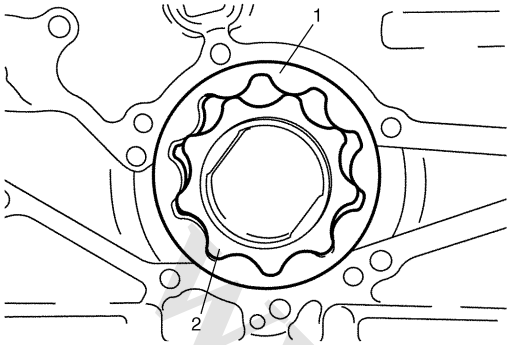


I2RH0B150019-01

4) Apply engine oil to relief valve (1) and spring (2), and install them with retainer (3) and new circlip (4) to rotor plate (5).

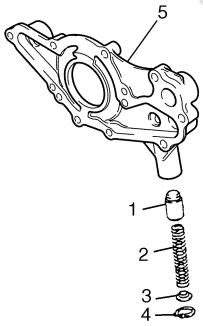


I3RM0A150005-01

5) Install rotor plate and tighten all bolts to specified torque. After installing plate, check to be sure that rotors turn smoothly by hand (0.3 N·m (0.03 kgf-m, 0.25 lb-ft) torque or below).

**Tightening torque**
**Oil pump rotor plate bolt (a): 11 N·m (1.1 kgf-m, 8.0 lb-ft)**

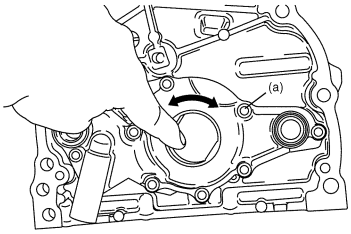


I2RH0B150022-01

## Oil Pump Inspection

S5JB0A1516007

### Oil Seal

Check oil seal lip for fault or other damage. Replace as necessary.

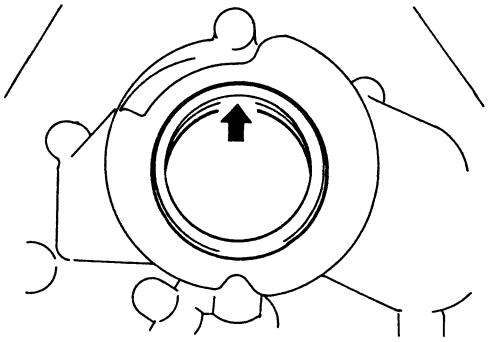

I2RH0B150023-01

### Oil Pump

- Check outer (1) and inner rotors (2), rotor plate, and oil pump case for excessive wear or damage.

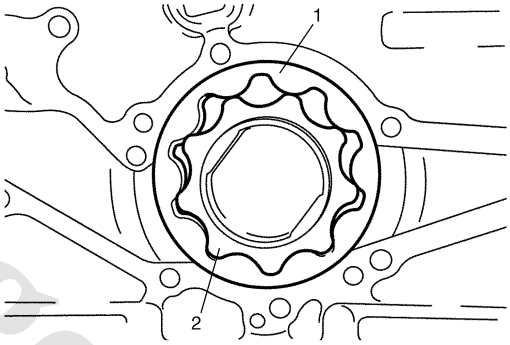


I2RH0B150019-01

- Check relief valve (1) for excessive wear or damage and operates smoothly.

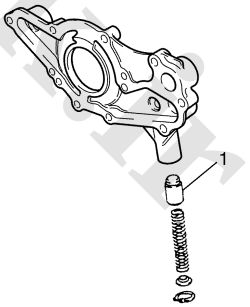


I2RH0B150025-01

www.cargeek.ir

www.CarGeek.ir


**Radial clearance**
Check radial clearance between outer rotor (1) and case (2) using thickness gauge (3).
If clearance exceeds its limit, replace outer rotor or case.

**Radial clearance between outer rotor and case for oil pump**
**Limit: 0.310 mm (0.0122 in.)**

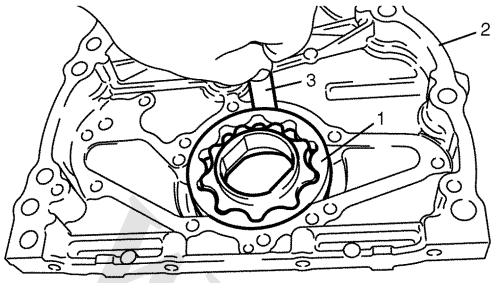

I2RH0B150026-01

**Side clearance**
Using straightedge (1) and thickness gauge (2), measure side clearance.
If side clearance exceeds its limit, replace oil pump assembly.

**Side clearance for oil pump inner rotor**
**Limit: 0.15 mm (0.0059 in.)**

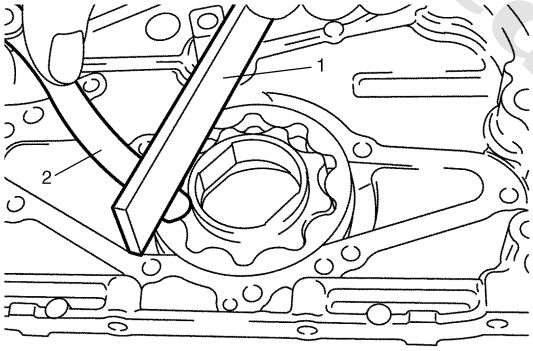

I2RH0B150027-01

**Relief valve spring free length and load**
Check relief valve spring free length and load as shown in the figure. If the measured valve spring length is lower than the specification, replace relief valve spring.

**Relief valve spring free length and load**

| | Standard | Limit |
|---|---|---|
| Free length | 52.4 mm (2.06 in.) | — |
| Load at spring length 38.5 mm (1.52 in.) | 77 N (7.7 kgf, 17.0 lb) | 69 N (6.9 kgf, 15.0 lb) |

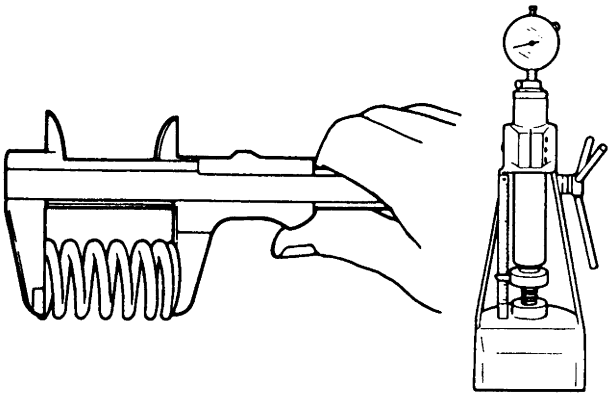
I2RH01150023-01

www.cargeek.ir

www.CarGeek.ir

# Specifications

## Tightening Torque Specifications

S5JB0A1517001

| Fastening part | Tightening torque | | | Note |
|---|---|---|---|---|
| | N·m | kgf-m | lb-ft | |
| Oil pressure switch | 13 | 1.3 | 9.5 | ☞ |
| Oil pump strainer bolt | 11 | 1.1 | 8.0 | ☞ |
| Oil pan bolt and nut | 11 | 1.1 | 8.0 | ☞ |
| Oil pan drain plug | 35 | 3.5 | 25.5 | ☞ |
| Transmission to engine bolt | 85 | 8.5 | 61.5 | ☞ |
| Clutch housing lower plate No.1 bolt | 11 | 1.1 | 8.0 | ☞ |
| Clutch housing lower plate No.2 bolt | 11 | 1.1 | 8.0 | ☞ |
| Oil pump rotor plate bolt | 11 | 1.1 | 8.0 | ☞ |

**NOTE**

**The specified tightening torque is also described in the following.**
**“Oil Pan and Oil Pump Strainer Components: For M16A Engine with VVT”**
**“Oil Pump Components: For M16A Engine with VVT”**

**Reference:**
For the tightening torque of fastener not specified in this section, refer to “Fastener Information:  in Section 0A”.

# Special Tools and Equipment

## Recommended Service Material

S5JB0A1518001

| Material | SUZUKI recommended product or Specification | | Note |
|---|---|---|---|
| Sealant | SUZUKI Bond No.1217G | P/No.: 99000–31260 | ☞ |

**NOTE**

**Required service material is also described in the following.**
**“Oil Pan and Oil Pump Strainer Components: For M16A Engine with VVT”**
**“Oil Pump Components: For M16A Engine with VVT”**

## Special Tool

S5JB0A1518002

| | |
|---|---|
| 09915–77310<br>Oil pressure gauge (0-10kg/cm2)<br>☞<br> 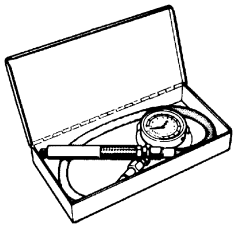 | 09915–78211<br>Oil pressure gauge attachment<br>☞<br> 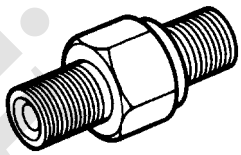 |

www.cargeek.ir

www.CarGeek.ir


# For J20 Engine

## General Description

### Engine Lubrication Description

S5JB0A1521001

The oil pump is trochoid type, and mounted under the crankshaft. Oil is drawn up through the oil pump strainer and passed through the pump to the oil filter.
The filtered oil flows into two paths in cylinder block.
In one path, oil reaches the crankshaft journal bearings. Oil from the crankshaft journal bearings is supplied to the connecting rod bearings by means of intersecting passages drilled in the crankshaft.
In the other path oil goes up to the cylinder head and lubricates valves and camshafts, etc., after passing through the internal oilway of camshafts.
An oil relief valve is provided on the oil pump. This valve starts relieving oil pressure when the pressure exceeds specified pressure.

www.cargeek.ir

www.cargeek.ir

www.CarGeek.ir

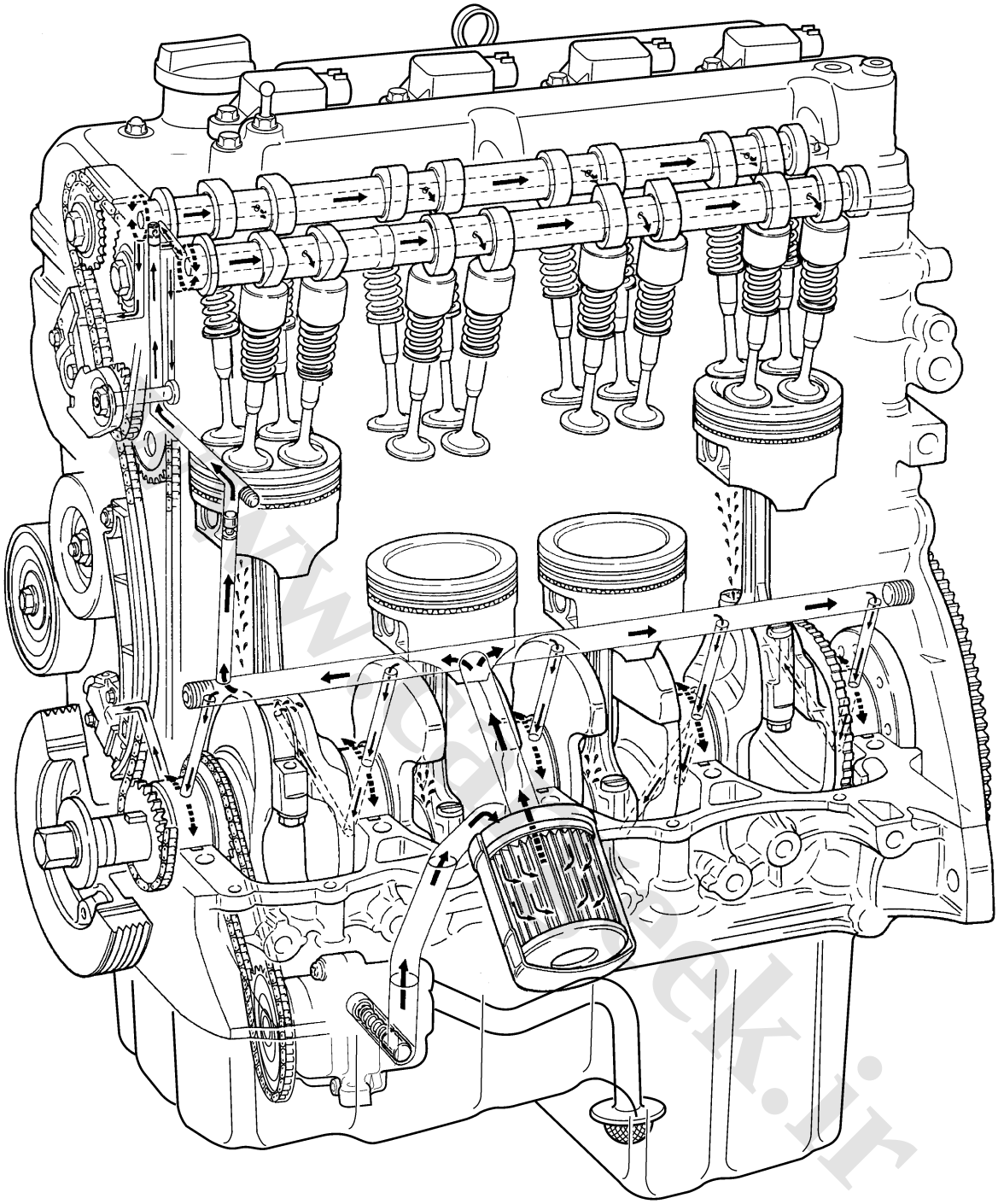

I5JB0A151013-01

www.cargeek.ir

www.CarGeek.ir


# Diagnostic Information and Procedures

## Oil Pressure Check

S5JB0A1524001

**⚠ WARNING**

**To avoid danger of being burned, do not touch exhaust manifold when exhaust system is hot.**
**When servicing, be sure to perform it after exhaust system has cooled down.**

**NOTE**

**Prior to checking oil pressure, check the following.**

- **Oil level in oil pan**
  **If oil level is low, add oil up to Full level hole on oil level gauge referring to "Engine Oil and Filter Change: in Section 0B".**
- **Oil quality**
  **If oil is discolored, or deteriorated, change it. For particular oil to be used, refer to "Engine Oil and Filter Change: in Section 0B".**
- **Oil leaks**
  **If leak is found, repair it.**

1) Disconnect oil pressure switch connector.
2) Remove oil pressure switch (1) from cylinder block.

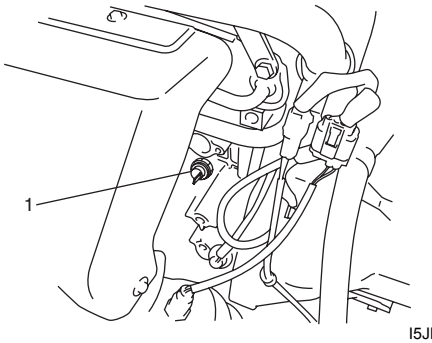


I5JB0A152001-01

3) Install special tool (Oil pressure gauge) to vacated threaded hole.

**Special tool**
**(A): 09915–77311**
**(B): 09915–78211**

**⚠ CAUTION**

**Be careful not to make special tool touch Exhaust manifold when installing because Exhaust manifold becomes very hot.**

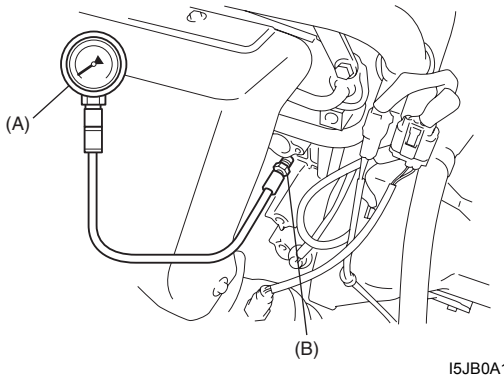


I5JB0A152002-01

4) Start engine and warm it up to normal operating temperature.

**NOTE**

**Be sure to place transmission gear shift lever in "Neutral" (shift selector lever to "P" range for A/T model), and set parking brake and block drive wheels.**

5) After warming up, raise engine speed to 4,000 rpm and measure oil pressure.

**Oil pressure specification**
**More than 390 kPa (3.9 kg/cm², 55.5 psi)**

6) After checking oil pressure, stop engine and remove oil pressure gauge.
7) Before reinstalling oil pressure switch (2), be sure to wrap its screw threads with sealing tape (1) and tighten switch to specified torque.

**Tightening torque**
**Oil pressure switch (a): 13 N·m (1.3 kgf-m, 9.5 lb-ft)**

**NOTE**

**If sealing tape edge is bulged out from screw threads of switch, cut it off.**

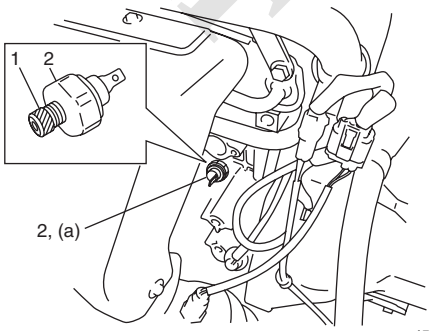


I5JB0A152003-01

8) Start engine and check oil pressure switch for oil leakage. If oil leakage is found, repair it.
9) Connect oil pressure switch coupler.

www.cargeek.ir

www.CarGeek.ir

# Repair Instructions

## Oil Pan and Oil Pump Strainer Components

S5JB0A1526001

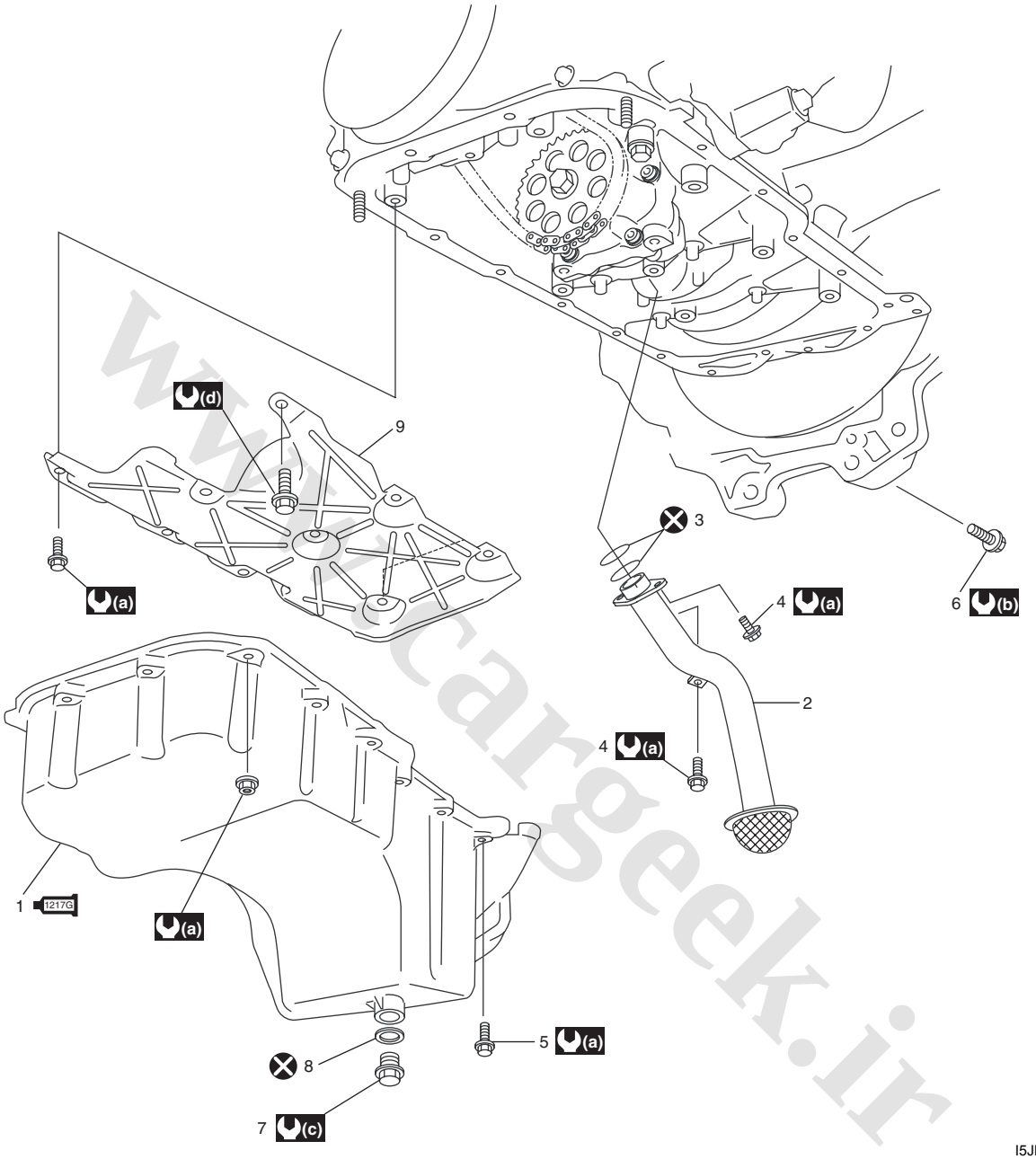


I5JB0A152004-02

| | |
|---|---|
| 1217G 1. Oil pan<br>: Apply sealant 99000-31260 to mating surface. | 8. Gasket |
| 2. Oil pump strainer | 9. Baffle plate |
| 3. O-ring | (a) : 11 N·m (1.1 kgf-m, 8.0 lb-ft) |
| 4. Oil pump strainer bolt | (b) : 85 N·m (8.5 kgf-m, 61.5 lb-ft) |
| 5. Oil pan bolt and nut | (c) : 35 N·m (3.5 kgf-m, 25.5 lb-ft) |
| 6. Transmission case No.1 bolt | (d) : 25 N·m (2.5 kgf-m, 18.0 lb-ft) |
| 7. Drain plug | ⊗ : Do not reuse. |

www.cargeek.ir

www.CarGeek.ir


## Oil Pan and Oil Pump Strainer Removal and Installation

S5JB0A1526002

### Removal

1) Remove oil level gauge.
2) Raise vehicle.
3) Remove engine under cover (1).
4) Drain engine oil by removing drain plug (2).

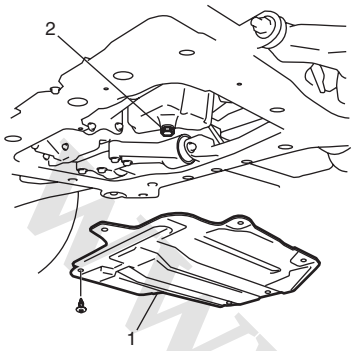


I5JB0A152005-01

5) Remove front suspension frame referring to “Front Suspension Frame, Stabilizer Bar and/or Bushings Removal and Installation: in Section 2B”.
6) Remove oil pan, oil pump strainer (1) and O-ring (2) from lower crank case.

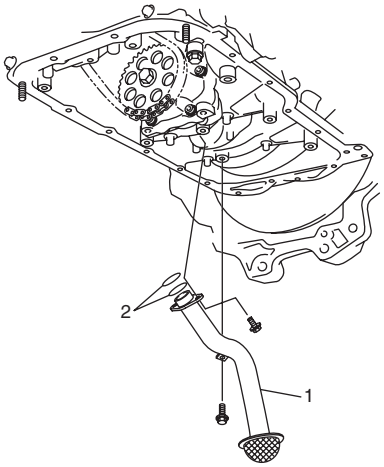


I5JB0A152006-01

### Installation

1) Apply sealant to oil pan (1) mating surface continuously as shown in figure.

**“A”: Water tight sealant 99000–31250 (SUZUKI Bond No.1207F)**

**<u>Sealant amount for oil pan</u>**
**Width “a”: 3 mm (0.12 in.)**
**Height “b”: 2 mm (0.08 in.)**

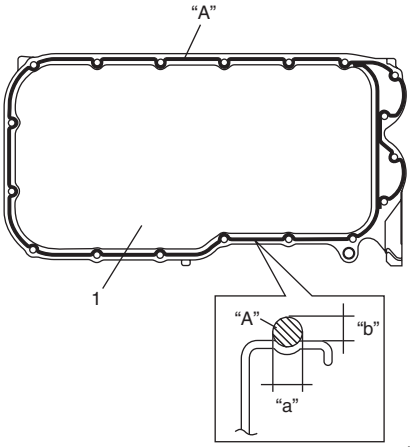


I5JB0A152007-01

2) Install new O-rings (2) to oil pump strainer (1) securely as shown in figure.
Tighten strainer bolts to specified torque.

**Tightening torque**
**Oil pump strainer bolt (a): 11 N·m (1.1 kgf-m, 8.0 lb-ft)**

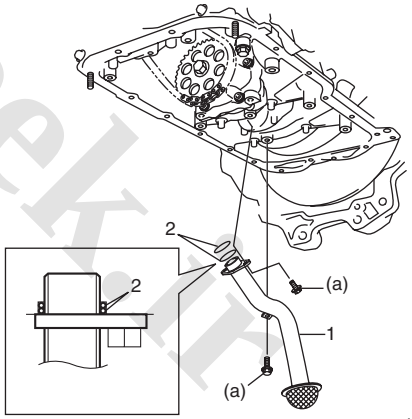


I5JB0A152008-01

3) After fitting oil pan (1) to cylinder block, run in securing bolts and start tightening at the center: move wrench outward, tightening one bolt at a time. Tighten bolts and nuts to specified torque.

**Tightening torque**
**Oil pan bolt and nut (a): 11 N·m (1.1 kgf-m, 8.0 lb-ft)**
**Transmission case No.1 bolt (b): 85 N·m (8.5 kgf-m, 61.5 lb-ft)**

www.cargeek.ir

www.CarGeek.ir

4) Install new gasket and drain plug (2) to oil pan after applying engine oil.
   Tighten drain plug to specified torque.

   **Tightening torque**
   **Oil drain plug (c): 35 N·m (3.5 kgf-m, 25.5 lb-ft)**

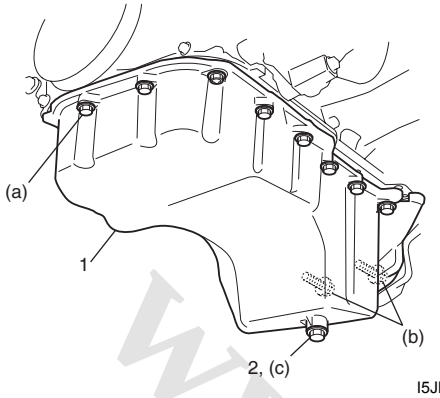

I5JB0A152009-01

5) Install front suspension frame referring to “Front Suspension Frame, Stabilizer Bar and/or Bushings Removal and Installation: in Section 2B”.
6) Install engine under cover.
7) Install oil level gauge.
8) Refill engine with engine oil referring to “Engine Oil and Filter Change: in Section 0B”.

## Oil Pan and Oil Pump Strainer Cleaning

S5JB0A1526003

- Clean mating surface of oil pan and cylinder block. Remove oil, old sealant and dust from mating surfaces and oil pan inside.
- Clean oil pump strainer screen.

## Oil Pump Components

S5JB0A1526004

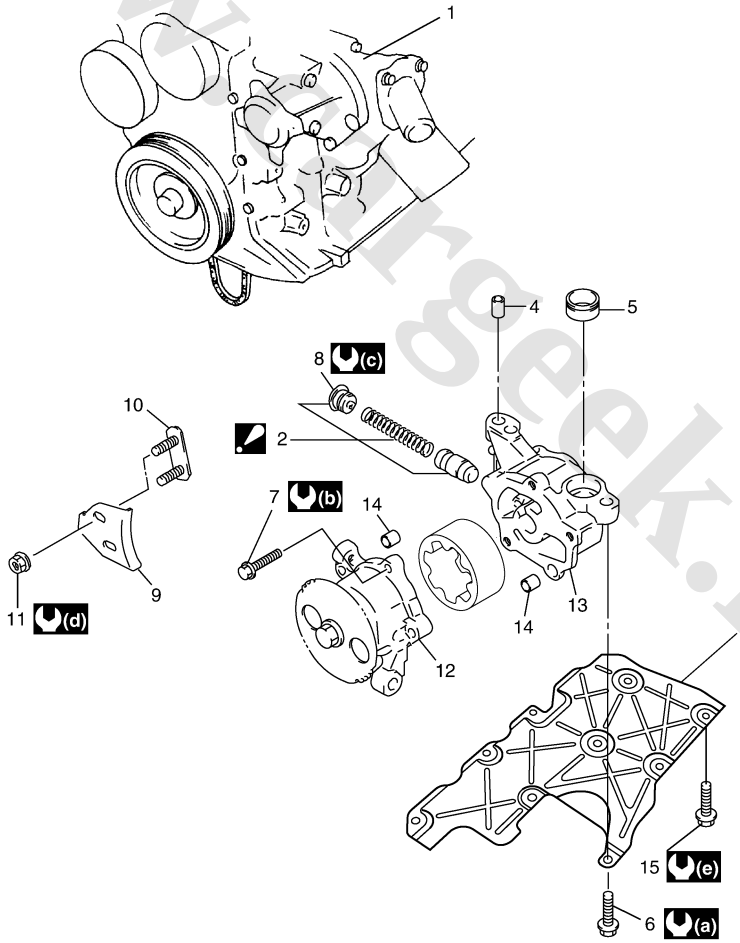

I5JB0A152010-02

| | | | |
|---|---|---|---|
| 1. Cylinder block | 6. Oil pump mounting bolt (M8 bolt) | 11. Oil pump chain guide nut | (a) : 25 N·m (2.5 kgf-m, 18.0 lb-ft) |
| 2. Oil pump relief valve set : Replace as a set. | 7. Oil pump case bolt | 12. Oil pump case No.1 | (b) : 12 N·m (1.2 kgf-m, 9.0 lb-ft) |
| 3. Baffle plate | 8. Oil pump relief valve retainer | 13. Oil pump case No.2 | (c) : 28 N·m (2.5 kgf-m, 20.5 lb-ft) |
| 4. Pin No.1 | 9. Oil pump chain guide | 14. Pin No.3 | (d) : 11 N·m (1.1 kgf-m, 8.0 lb-ft) |
| 5. Pin No.2 | 10. Oil pump chain guide plate | 15. Baffle plate bolt (M6 bolt) | (e) : 11 N·m (1.1 kgf-m, 8.0 lb-ft) |

www.cargeek.ir

www.CarGeek.ir


## Oil Pump Removal and Installation

S5JB0A1526005

**⚠ CAUTION**

**Don't remove sprocket and inner rotor from oil pump, otherwise damage of oil pump center shaft and abnormal operation of oil pump could result.**

### Removal

1) Disconnect negative cable at battery.
2) Drain engine oil referring to "Engine Oil and Filter Change: in Section 0B".
3) Remove oil pan and oil pump strainer.
   Refer to "Oil Pan and Oil Pump Strainer Removal and Installation: For J20 Engine".
4) Remove baffle plate from lower crank case (1).
5) Remove oil pump chain guide.
6) Remove oil pump (2) with sprocket from lower crank case (1).

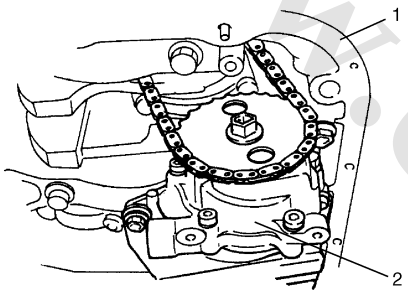


I2RH01150016-01

### Installation

1) Install oil pump (2) and baffle plate to lower crank case (1) and tighten bolts to specified torque.

**NOTE**

**When installing oil pump, be careful not to allow pins to fall off.**

**Tightening torque**
**Oil pump mounting bolt (M8 bolt) (a): 25 N·m ( 2.5 kgf-m, 18.0 lb-ft)**
**Baffle plate bolt (M6 bolt): 11 N·m (1.1 kgf-m, 8.0 lb-ft)**

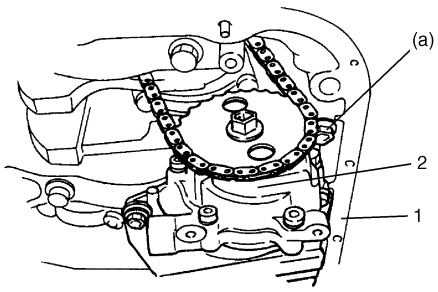


I2RH01150017-01

2) Install oil pump chain guide (1), and tighten bolts to specified torque.

**Tightening torque**
**Oil pump chain guide nut (a): 11 N·m (1.1 kgf-m, 8.0 lb-ft)**

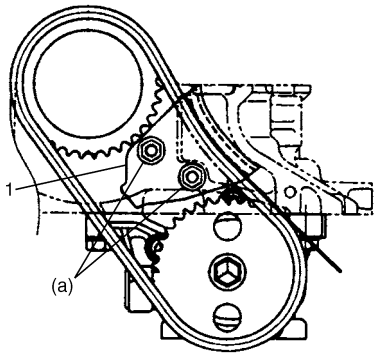


I5JB0A152011-01

3) Install oil pan and oil pump strainer.
   Refer to "Oil Pan and Oil Pump Strainer Removal and Installation: For J20 Engine"
4) Install front suspension frame referring to "Front Suspension Frame, Stabilizer Bar and/or Bushings Removal and Installation: in Section 2B".
5) Refill engine with engine oil referring to "Engine Oil and Filter Change: in Section 0B".
6) Connect negative cable at battery.
7) After completing installation, check oil pressure by running engine. Refer to "Oil Pressure Check: For J20 Engine".

## Oil Pump Disassembly and Assembly

S5JB0A1526006

**⚠ CAUTION**

**Don't remove sprocket and inner rotor from oil pump, otherwise damage of oil pump center shaft and abnormal operation of oil pump could result.**

### Disassembly

- Disassemble oil pump referring to "Oil Pump Components: For J20 Engine".

### Assembly

1) Wash, clean and then dry all disassembled parts.
2) Apply thin coat of engine oil to inner and outer rotors, and inside surfaces of oil pump case.
3) Install outer rotor to pump case No.1.
4) Install relief valve (3), relief spring (2) and retainer (1) to oil pump case No.2 (4).
   Tighten retainer to specified torque.

**Tightening torque**
**Oil pump relief valve retainer (a): 28 N·m (2.8 kgf-m, 20.5 lb-ft)**

www.cargeek.ir

www.CarGeek.ir

5) Install oil pump case pins (5) to oil pump case No.2.

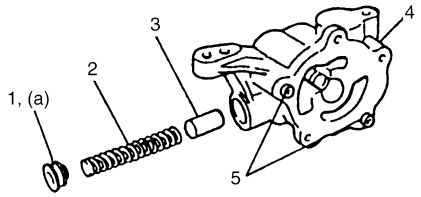


I2RH01150020-01

6) Assemble oil pump. After assembling oil pump, check to be sure that rotor turns smoothly by hand.

**Tightening torque**
**Oil pump case bolt (a): 12 N·m (1.2 kgf-m, 9.0 lb-ft)**

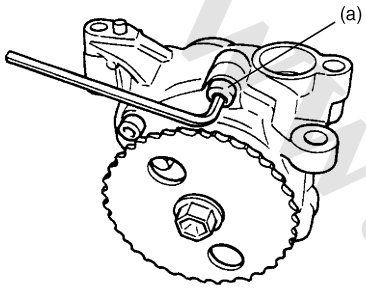


I2RH01150021-01

## Oil Pump Inspection

S5JB0A1526007

- Check outer rotor (3), inner rotor and oil pump cases (1), (2) for excessive wear or damage.
  If abnormal condition is found in above checks, replace oil pump assembly.
- Check relief valve (4) for excessive wear or damage.
  If abnormal condition is found in above checks, replace oil pump relief valve set.

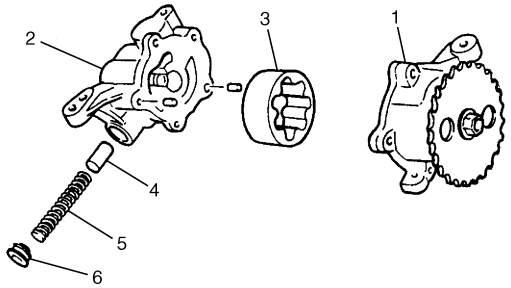


I2RH01150022-01

| | |
|---|---|
| 5. | Relief spring |
| 6. | Retainer |

- Measure free length and tension of oil relief spring.
  If the measured values of length or tension is less than the specification, replace oil pump relief valve set.

**Oil relief spring**

| Item | Standard |
|---|---|
| Spring free length | 63.5 mm (2.5 in.) |
| Spring preload | 85.0 N for 52.0 mm (8.5 kg for 52.0 mm, 19.0 lb/2.05 in.) |

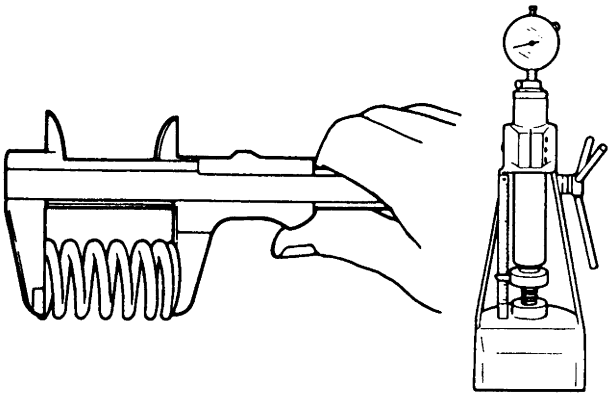

I2RH01150023-01

- Measure clearance of oil pump rotor and oil pump case.

**Radial Clearance**
Check radial clearance between outer rotor (2) and case No.1 (1), using thickness gauge (4).
If clearance exceeds its limit, replace oil pump assembly.

**Limit on radial clearance between outer rotor and case**
**0.20 mm (0.0079 in.)**

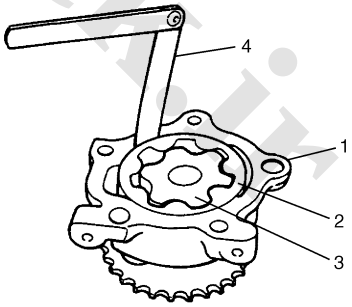


I2RH01150024-01

| | |
|---|---|
| 3. | Inner rotor |

www.cargeek.ir

www.CarGeek.ir


**Side Clearance**
Using straightedge (5) and thickness gauge (4), measure side clearance.
If side clearance exceeds its limit, replace oil pump assembly.

**Limit on side clearance**
**0.11 mm (0.0043 in.)**

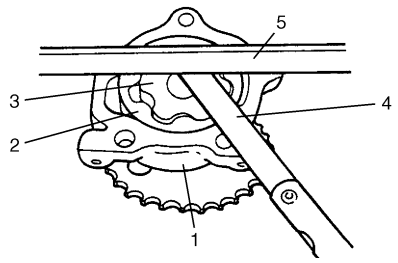

I2RH01150025-01

| | |
|---|---|
| 1. Oil pump case No.1 | 3. Inner rotor |
| 2. Outer rotor | |

# Specifications

## Tightening Torque Specifications

S5JB0A1527001

| Fastening part | Tightening torque | | | Note |
|---|---|---|---|---|
| | N·m | kgf-m | lb-ft | |
| Oil pressure switch | 13 | 1.3 | 9.5 | ☞ |
| Oil pump strainer bolt | 11 | 1.1 | 8.0 | ☞ |
| Oil pan bolt and nut | 11 | 1.1 | 8.0 | ☞ |
| Transmission case No.1 bolt | 85 | 8.5 | 61.5 | ☞ |
| Oil drain plug | 35 | 3.5 | 25.5 | ☞ |
| Oil pump mounting bolt (M8 bolt) | 25 | 2.5 | 18.0 | ☞ |
| Baffle plate bolt (M6 bolt) | 11 | 1.1 | 8.0 | ☞ |
| Oil pump chain guide nut | 11 | 1.1 | 8.0 | ☞ |
| Oil pump relief valve retainer | 28 | 2.8 | 20.5 | ☞ |
| Oil pump case bolt | 12 | 1.2 | 9.0 | ☞ |

**NOTE**

**The specified tightening torque is also described in the following.**
**“Oil Pan and Oil Pump Strainer Components: For J20 Engine”**
**“Oil Pump Components: For J20 Engine”**

**Reference:**
For the tightening torque of fastener not specified in this section, refer to “Fastener Information: in Section 0A”.

www.cargeek.ir

www.CarGeek.ir

# Special Tools and Equipment

## Recommended Service Material

S5JB0A1528001

| Material | SUZUKI recommended product or Specification | | Note |
|---|---|---|---|
| Water tight sealant | SUZUKI Bond No.1207F | P/No.: 99000–31250 | ☞ |

**NOTE**

**Required service material is also described in the following.**
**“Oil Pan and Oil Pump Strainer Components: For J20 Engine”**

## Special Tool

S5JB0A1528002

| | |
|---|---|
| 09915–77311<br>Oil pressure gauge<br>☞ 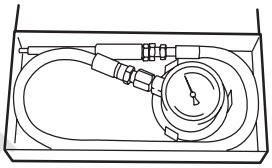 | 09915–78211<br>Oil pressure gauge attachment<br>☞ 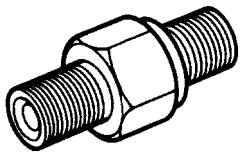 |

www.cargeek.ir

www.cargeek.ir

www.CarGeek.ir


# Engine Cooling System

## General Description

### Cooling System Description

S5JB0A1601001

The cooling system consists of the radiator cap, radiator, coolant reservoir, hoses, water pump, cooling fan and thermostat. The radiator is of tube-and-fin type.

### Coolant Description

S5JB0A1601002

**⚠ WARNING**

- **Do not remove radiator cap to check engine coolant level; check coolant visually at the see-through coolant reservoir. Coolant should be added only to reservoir as necessary.**
- **As long as there is pressure in the cooling system, the temperature can be considerably higher than the boiling temperature of the solution in the radiator without causing the solution to boil. Removal of the radiator cap while engine is hot and pressure is high will cause the solution to boil instantaneously and possibly with explosive force, spewing the solution over engine, fenders and person removing cap. If the solution contains flammable anti-freeze such as alcohol (not recommended for use at any time), there is also the possibility of causing a serious fire.**
- **Check to make sure that engine coolant temperature is cold before removing any part of cooling system.**
- **Also be sure to disconnect negative cable from battery terminal before removing any part.**

The coolant recovery system is standard. The coolant in the radiator expands with heat, and the coolant is overflowed to the reservoir.
When the system cools down, the coolant is drawn back into the radiator.
The cooling system has been filled with a quality coolant that is a 50/50 mixture of water and ethylene glycol antifreeze.

This 50/50 mixture coolant solution provides freezing protection to –36 °C (–33 °F).

- Maintain cooling system freeze protection at –36 °C (–33 °F) to ensure protection against corrosion and loss of coolant from boiling. This should be done even if freezing temperatures are not expected.
- Add ethylene glycol base coolant when coolant has to be added because of coolant loss or to provide added protection against freezing at temperature lower than –36 °C (–33 °F).

**NOTE**

- **Alcohol or methanol base coolant or plain water alone should not be used in cooling system at any time as damage to cooling system could occur.**
- **Coolant must be mixed with deminerated water or distilled water.**

**Anti-freeze proportioning table**

| | | For M16 engine model | For J20 engine model |
|---|---|---|---|
| Freezing temperature | °C | –36 | –36 |
| | °F | –33 | –33 |
| Anti-freeze / Anti-corrosion coolant concentration | % | 50 | 50 |
| Ratio of compound to cooling water | ltr. | 3.45/3.45 | 3.65/3.65 |
| | US pt. | 7.29/7.29 | 7.71/7.71 |
| | Imp pt. | 6.07/6.07 | 6.42/6.42 |

**Coolant capacity**

- **For M16 engine model**
  **Engine, radiator and heater: 6.1 liters (12.89/10.74 US/Imp pt.)**
  **Reservoir: 0.8 liters (1.69/1.40 US/Imp pt.)**
  **Total: 6.9 liters (14.58/12.14 US/Imp pt.)**
- **For J20 engine model**
  **Engine, radiator and heater: 6.6 liters (13.95/11.62 US/Imp pt.)**
  **Reservoir: 0.7 liters (1.48/1.23 US/Imp pt.)**
  **Total: 7.3 liters (15.42/12.85 US/Imp pt.)**

www.cargeek.ir

www.CarGeek.ir

# Schematic and Routing Diagram

## Coolant Circulation

S5JB0A1602001

While the engine is warmed up (thermostat closed), coolant circulates as follows.

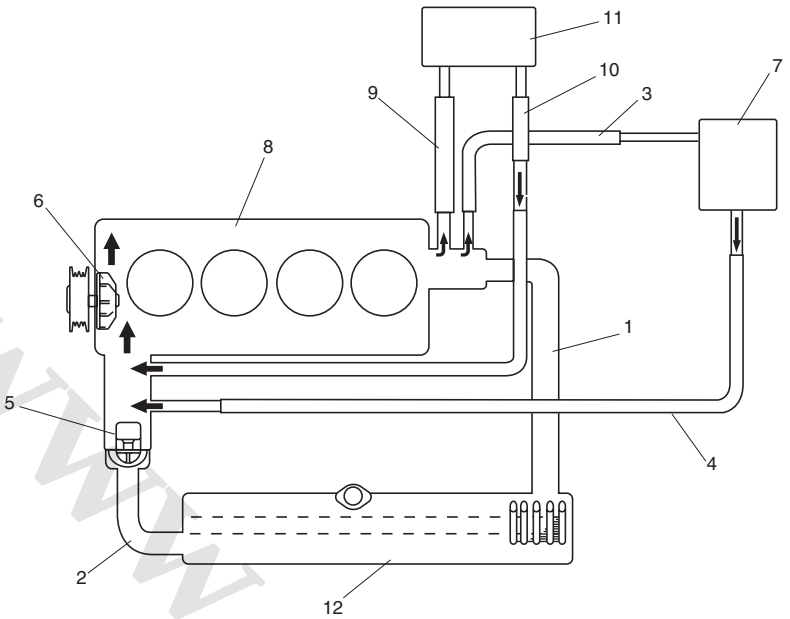


I5JB0A161001-01

| | | |
|---|---|---|
| 1. Radiator inlet hose | 5. Thermostat | 9. Heater core inlet hose |
| 2. Radiator outlet hose | 6. Water pump | 10. Heater core outlet hose |
| 3. Throttle body inlet hose | 7. Throttle body | 11. Heater core |
| 4. Throttle body outlet hose | 8. Engine | 12. Radiator |

When coolant is warmed up to normal temperature and the thermostat opens, coolant passes through the radiator core to be cooled as follows.

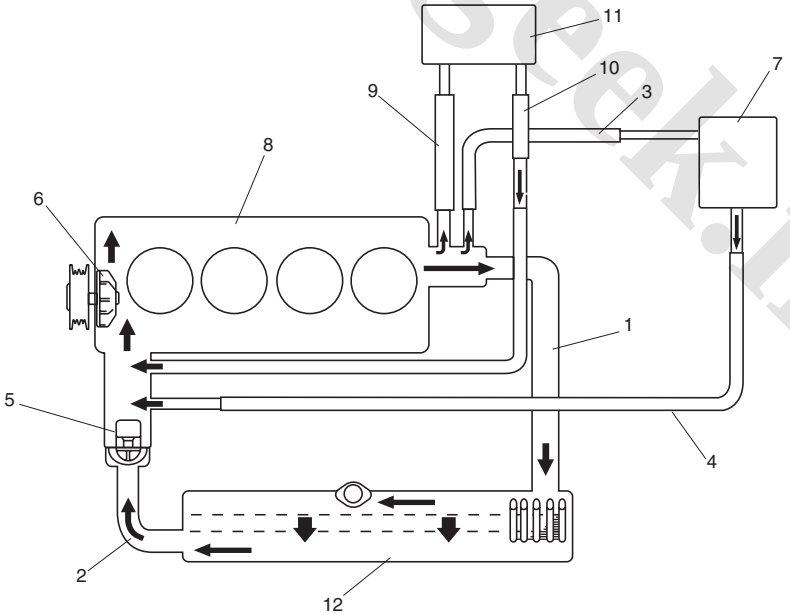


I5JB0A161002-01

| | | |
|---|---|---|
| 1. Radiator inlet hose | 5. Thermostat | 9. Heater core inlet hose |
| 2. Radiator outlet hose | 6. Water pump | 10. Heater core outlet hose |
| 3. Throttle body inlet hose | 7. Throttle body | 11. Heater core |
| 4. Throttle body outlet hose | 8. Engine | 12. Radiator |

www.cargeek.ir

www.CarGeek.ir


# Diagnostic Information and Procedures

## Engine Cooling Symptom Diagnosis

S5JB0A1604001

| Condition | Possible cause | Correction / Reference Item |
|---|---|---|
| ***Engine overheats (Radiator fan operates)*** | Loose or broken water pump belt | *Adjust or replace.* |
| | Not enough coolant | *Check coolant level and add as necessary.* |
| | Faulty thermostat | *Replace.* |
| | Faulty water pump | *Replace.* |
| | Dirty or bent radiator fins | *Clean or remedy.* |
| | Coolant leakage on cooling system | *Repair.* |
| | Clogged radiator | *Check and replace radiator as necessary.* |
| | Faulty radiator cap | *Replace.* |
| | Improper ignition timing | *Adjust.* |
| | Dragging brakes | *Adjust brake.* |
| | Slipping clutch | *Adjust or replace.* |
| | Poor charge battery | *Check and replace as necessary.* |
| | Poor generation generator | *Check and repair.* |
| | ECT sensor faulty | *Check and replace as necessary.* |
| | Radiator cooling fan relay No.2 and/or No.3 faulty | *Check and replace as necessary.* |
| | Radiator fan motor faulty | *Check and replace as necessary.* |
| | ECM faulty | *Check and replace as necessary.* |
| | Wiring or grounding faulty | *Repair as necessary.* |
| | Equipped with too much electric load part(s) | *Dismount.* |
| ***Engine overheats (Radiator fan does not operate)*** | Fuse blown | *Check 15 A fuse of relay/fuse box and check for short circuit to ground.* |
| | Radiator cooling fan relay No.1 faulty | *Check and replace as necessary.* |
| | ECT sensor faulty | *Check and replace as necessary.* |
| | Radiator cooling fan motor faulty | *Check and replace as necessary.* |
| | Wiring or grounding faulty | *Repair as necessary.* |
| | ECM faulty | *Check and replace as necessary.* |

www.cargeek.ir

www.CarGeek.ir

# Repair Instructions

## Cooling System Components

S5JB0A1606001

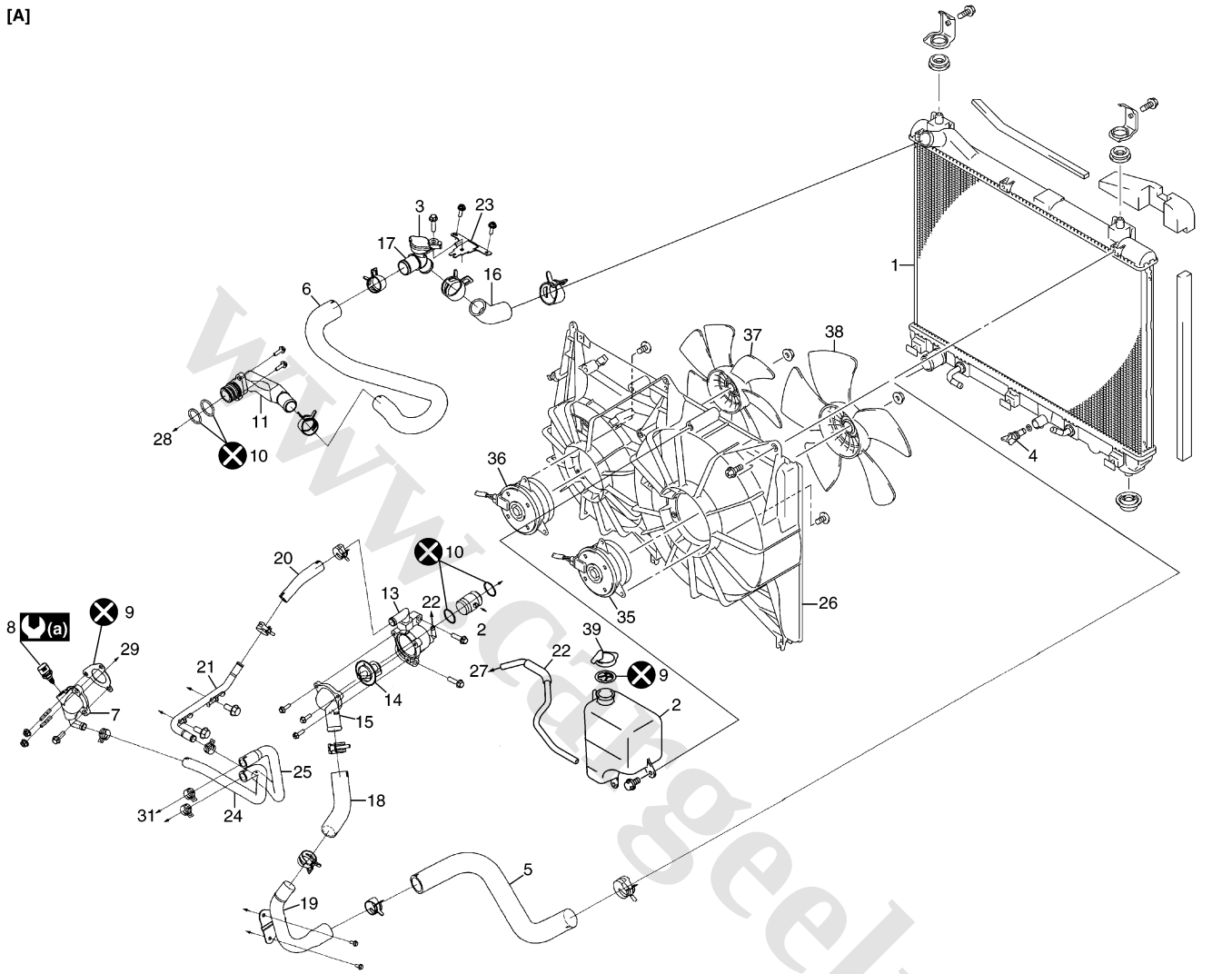


I5JB0A161003-03

www.cargeek.ir

[B]

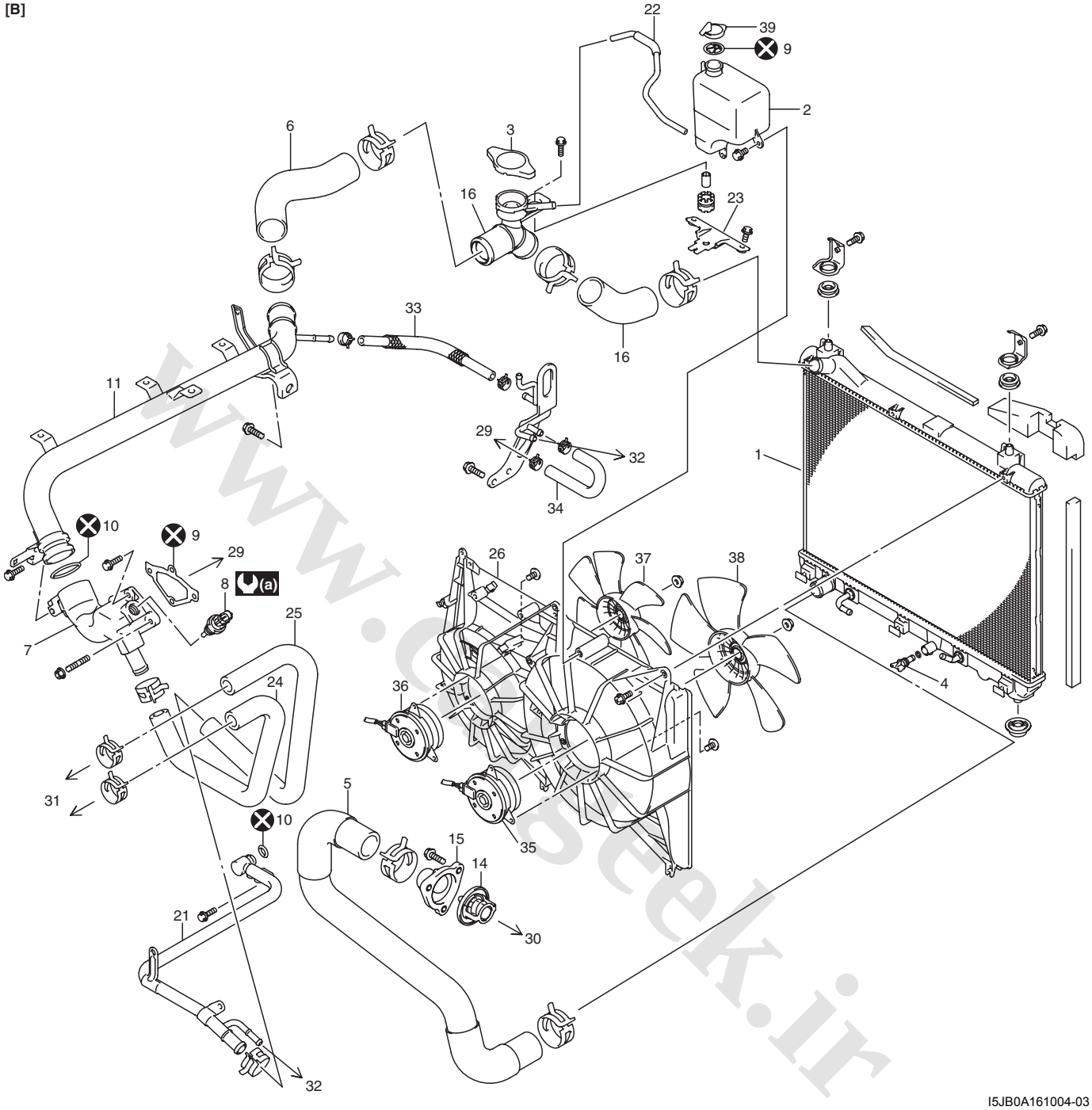


I5JB0A161004-03

| | | |
|---|---|---|
| [A]: M16 engine model | 14. Thermostat | 29. To cylinder head |
| [B]: J20 engine model | 15. Thermostat cap | 30. To water pump |
| 1. Radiator | 16. Radiator inlet No.2 hose | 31. To heater core |
| 2. Reservoir | 17. Water filler neck | 32. To throttle body |
| 3. Radiator cap | 18. Water inlet hose | 33. Water bypass No.2 hose |
| 4. Drain plug | 19. Radiator outlet pipe | 34. Water bypass No.1 hose |
| 5. Radiator outlet hose | 20. Heater outlet No.2 hose | 35. Main fan motor |
| 6. Radiator inlet No.1 hose | 21. Heater pipe | 36. Sub fan motor |
| 7. Water outlet cap | 22. Reservoir hose | 37. Sub fan |
| 8. ECT sensor | 23. Water filler neck bracket | 38. Main fan |
| 9. Gasket | 24. Heater inlet hose | 39. Reservoir cap |
| 10. O-ring | 25. Heater outlet No.1 hose | (a) : 13 N·m (1.3 kgf-m, 9.5 lb-ft) |
| 11. Water outlet pipe | 26. Fan shroud | ⊗ : Do not reuse. |
| 12. Thermostat case water outlet pipe | 27. To water filler neck | |
| 13. Thermostat case | 28. To timing chain cover | |

www.CarGeek.ir

## Coolant Level Check

S5JB0A1606002

**⚠ WARNING**

**To help avoid danger of being burned, do not remove radiator cap while engine and radiator are still hot. Scalding fluid and steam can be blown out under pressure if radiator cap is taken off too soon.**

To check level, lift hood and look at “see-through” coolant reservoir.
It is not necessary to remove radiator cap to check coolant level.
When engine is cool, check coolant level in reservoir (1).
A normal coolant level should be between “FULL” mark (2) and “LOW” mark (3) on reservoir (1).
If coolant level is below “LOW” mark (3), remove reservoir cap (4) and add proper coolant to reservoir to bring coolant level up to “FULL” mark (2).

**NOTE**

**If proper quality antifreeze is used, there is no need to add extra inhibitors or additives that claim to improve system. They may be harmful to proper operation of system, and are unnecessary expense.**

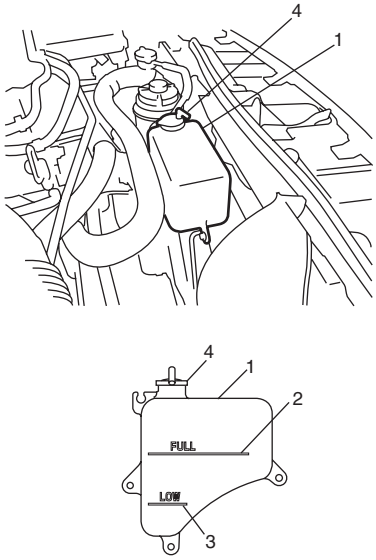


I5JB0A161005-01

## Engine Cooling System Inspection and Cleaning

S5JB0A1606003

**⚠ WARNING**

**To help avoid danger of being burned, do not remove radiator cap while engine and radiator are still hot. Scalding fluid and steam can be blown out under pressure if cap is taken off too soon.**

1) Check cooling system for leakage or damage.
2) Wash radiator cap and filler neck with clean water by removing radiator cap when engine is cold.
3) Check coolant for proper level and freeze protection.
4) Using a pressure tester (1), check system and radiator cap (2) for proper pressure holding capacity. If replacement of cap is required, use a proper cap for this vehicle.

**NOTE**

**After installing radiator cap to radiator, make sure that the ear of cap lines is parallel to radiator.**

**Cooling system and radiator cap holding pressure (for inspection)**
**110 kPa (1.1 kg/cm$^2$, 15.6 psi)**

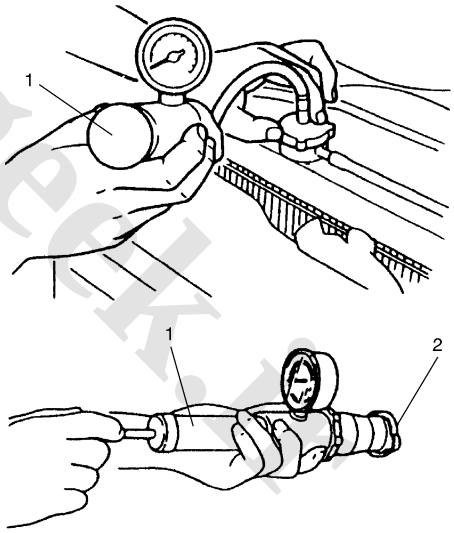


I5RH01160001-01

5) Tighten hose clamps and inspect all hoses. Replace hoses whenever cracked, swollen or otherwise deteriorated.
6) Clean frontal area of radiator core.

www.cargeek.ir

www.CarGeek.ir


## Cooling System Draining

S5JB0A1606019

1) Remove radiator cap.
2) Drain coolant from radiator drain plug (1).
3) After draining coolant, be sure to tighten drain plug (1) securely.

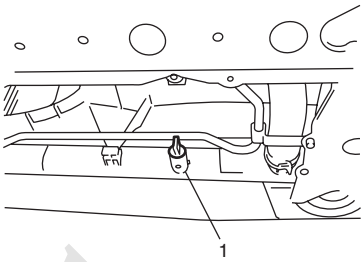


I5JB0A161006-01

## Cooling System Flush and Refill

S5JB0A1606004

**⚠ WARNING**

**To help avoid danger of being burned, do not remove radiator cap while engine and radiator are still hot. Scalding fluid and steam can be blown out under pressure if cap is taken off too soon.**

**NOTE**

**For detail of coolant specification, refer to "Coolant Description: ".**

1) Remove radiator cap as follows when engine is cool.
   a) Turn cap counterclockwise slowly until it reaches a "stop" (Do not press down while turning it).
   b) Wait until pressure is relieved (indicated by a hissing sound) then press down on cap and continue to turn it counterclockwise.
2) With radiator cap removed, run engine until upper radiator hose is hot (this shows that thermostat is open and coolant is flowing through system).
3) Stop engine and drain coolant from radiator drain plug (1).
4) Close radiator drain plug. Add water until system is filled and run engine until upper radiator hose is hot again.
5) Repeat Steps 3) and 4) several times until drained liquid is nearly colorless.
6) Close radiator drain plug (1) tightly.

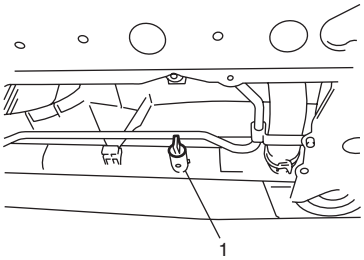


I5JB0A161006-01

7) Remove reservoir (1) and remove cap (2) from reservoir (1).
8) Pour out any fluid, scrub and clean inside of reservoir with soap and water.
   Flush it well with clean water and drain, Reinstall reservoir.
9) Fill reservoir with coolant up to "FULL" level mark (3).
10) Install reservoir cap (2) on reservoir.
11) Fill radiator with coolant up to bottom of radiator filler neck and install radiator cap, making sure that the ear of cap lines is parallel to radiator.
12) Run engine at idle speed.
13) Run engine until radiator fan motor is operated.
14) Stop engine and wait until engine comes cooled down to help avoid danger of being burned.
15) Add coolant to radiator up to bottom of radiator filler neck, and install radiator cap, making sure that the ear of cap lines is parallel to radiator.
16) Repeat Step 12) through 15).
17) Confirm that reservoir coolant level is "FULL" level mark (3). If coolant is insufficient, repeat Step 9) and 10).

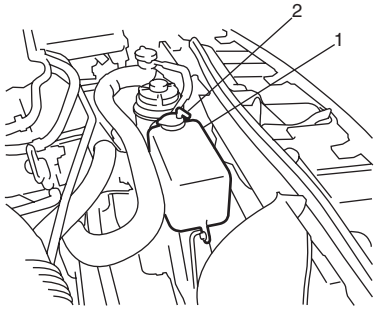


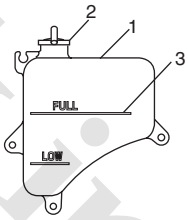


I5JB0A161007-01

www.cargeek.ir

www.CarGeek.ir

## Cooling Water Pipes or Hoses Removal and Installation

S5JB0A1606005

### Removal

1) Drain coolant referring to “Cooling System Draining: ”.
2) To remove these pipes or hoses, loosen clamp on each hose and pull hose end off.

### Installation

Install removed parts in reverse order of removal procedure, noting the following.

- Tighten each clamp securely.
- Refill cooling system referring to Step 7) to 17) of “Cooling System Flush and Refill: ”.

## Thermostat Removal and Installation (For M16 Engine Model)

S5JB0A1606006

### Removal

1) Drain coolant referring to “Cooling System Draining: ”.
2) Remove intake manifold referring to “Intake Manifold Removal and Installation: For M16A Engine with VVT in Section 1D”.
3) Disconnect water inlet hose (1) and heater outlet No.2 hose (2) from each pipe.
4) Remove thermostat case (3) with thermostat cap (4).
5) Remove thermostat cap (4) from thermostat case (3).
6) Remove thermostat from thermostat case (3).

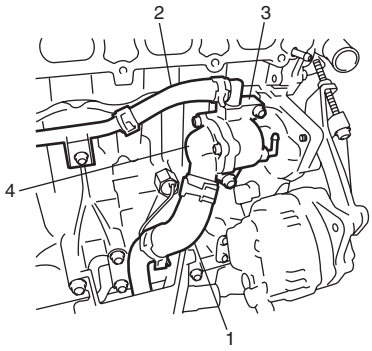


I5JB0A161008-02

### Installation

Reverse removal procedure for installation noting the following points.

- When positioning thermostat (1) on thermostat case (2), be sure to position it so that air bleed valve (3) comes at position as shown in the figure.

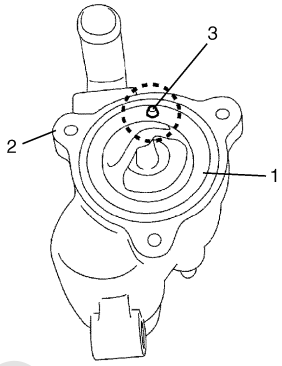


I2RH0B160006-01

- Use new O-rings when installing.
- Refill cooling system referring to Step 7) to 17) of “Cooling System Flush and Refill: ”.
- Verify that there is no coolant leakage at each connection.

www.cargeek.ir

www.CarGeek.ir


## Thermostat Removal and Installation (For J20 Engine Model)

S5JB0A1606022

### Removal

1) Drain coolant referring to “Cooling System Draining: ”.
2) Disconnect radiator outlet hose from thermostat cap (1).
3) Remove thermostat cap (1) from water pump (2).
4) Remove thermostat from water pump (2).

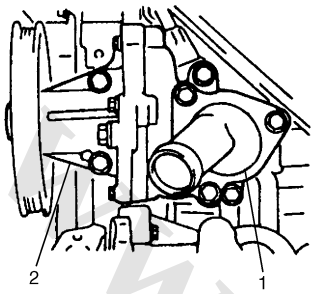


I5JB0A161009-01

### Installation

Reverse removal procedure for installation noting the following points.

- When positioning thermostat (1) on water pump case, be sure to position it so that air bleed valve (2) comes at match mark (3) and into the recession of water pump case.

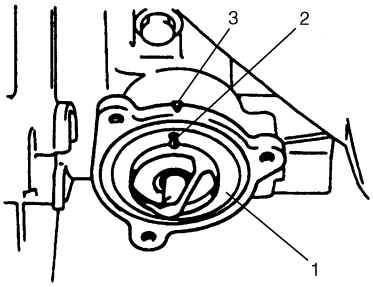


I2RH01160010-01

- Use new O-ring when installing.
- Refill cooling system referring to Step 7) to 17) of “Cooling System Flush and Refill: ”.
- Verify that there is no coolant leakage at each connection.

## Thermostat Inspection

S5JB0A1606007

- Make sure that air bleed valve (1) of thermostat is clean.
  Should this valve be clogged, engine would tend to overheat.
- Check to make sure that valve seat (2) is free from foreign matters which would prevent valve from seating tight.
- Check thermostat seal (3) for breakage, deterioration or any other damage.

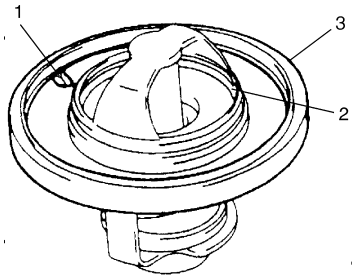


I3RM0A160008-01

- Check thermostatic movement of wax pellet as follows:
  a. Immerse thermostat (1) in water, and heat water gradually.
  b. Check that valve starts to open at specific temperature.

  **<u>Temperature at which valve begins to open</u>**
  **80 – 84 °C (176 – 183 °F)**

  **<u>Temperature at which valve become fully open</u>**
  **95 – 97 °C (203 °F)**

  **<u>Valve lift</u>**
  **More than 8 mm at 95 °C (203 °F)**

If valve starts to open at a temperature substantially below or above specific temperature, thermostat unit should be replaced with a new one. Such a unit, if reused, will bring about overcooling or overheating tendency.

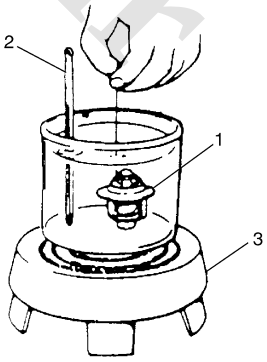


I2RH01160012-01

| | |
|---|---|
| 2. Thermometer | 3. Heater |

www.cargeek.ir

www.CarGeek.ir

## Radiator Cooling Fan Motor On-Vehicle Inspection

S5JB0A1606010

1) Check main and/or sub fan operation of radiator cooling fan as follows.
   a) Connect battery to main fan motor coupler (coupler color: black) or sub fan motor coupler (coupler color: gray) as shown in figure.
   b) Check that radiator cooling fan rotates smoothly. If any abnormality is found, replace fan motor.

   **Reference: Fan motor specified current at 12 V**
   **Main fan operation: 7.4 – 10.9 A**
   **Sub fan operation: 6.7 – 9.7 A**

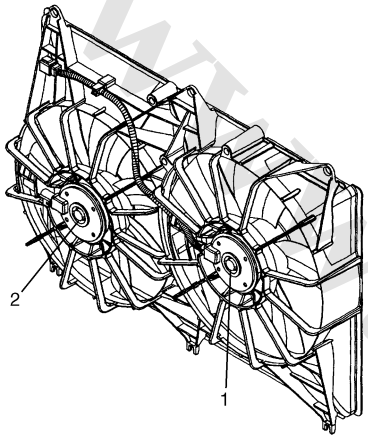


I5JB0A161012-02

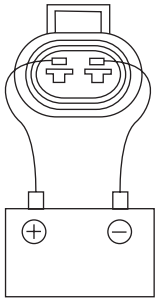

I5JB0A161011-01

| | |
|---|---|
| 1. | Main fan motor |
| 2. | Sub fan motor |

## Radiator Cooling Fan Relay Inspection

S5JB0A1606020

1) Disconnect negative (–) cable at battery.
2) Remove radiator cooling fan relay No.1 (1), No.3 (2) and/or No.2 (3) from relay box.
3) Check radiator cooling fan relay No.1 (1) and No.3 (2) as follows.
   a) Check that there is no continuity between terminals “C” and “D”. If there is continuity, replace relay.
   b) Connect battery positive (+) terminal to terminal “B” of relay.
   c) Connect battery negative (–) terminal to terminal “A” of relay.
   d) Check continuity between terminals “C” and “D”. If there is no continuity, replace relay.
4) Check radiator cooling fan relay No.2 (3) as follows.
   a) Check that there is no continuity between terminals “G” or “H” and “F”. If there is continuity, replace relay.
   b) Check continuity between terminals “I” and “H”. If there is no continuity, replace relay.
   c) Connect battery positive (+) terminal to terminal “F” of relay.
   d) Connect battery negative (–) terminal to terminal “E” of relay.
   e) Check continuity between terminals “G” and “H”. If there is no continuity, replace relay.

www.cargeek.ir
www.cargeek.ir

www.CarGeek.ir


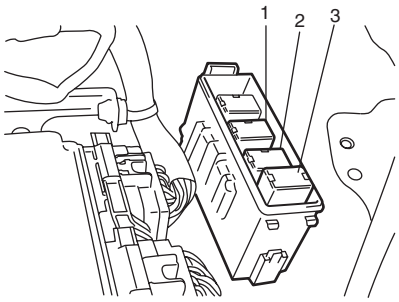


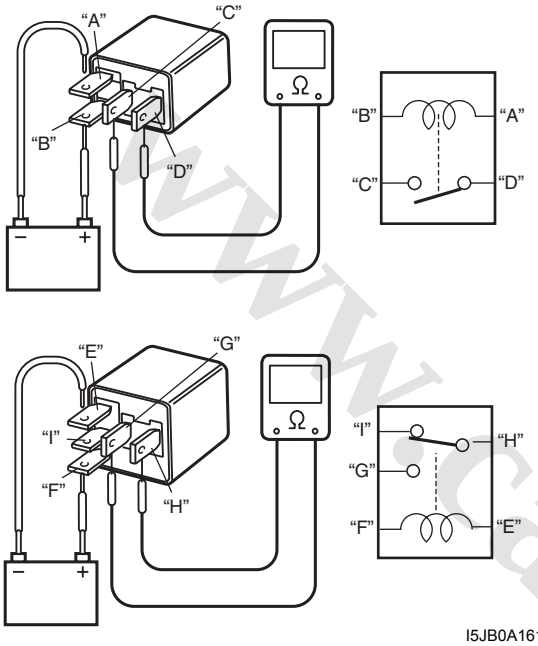


I5JB0A161017-01

## Radiator Cooling Fan Assembly Removal and Installation

S5JB0A1606021

### Removal

1) Disconnect negative (–) cable at battery.
2) Disconnect connectors (1) of cooling fan motors.

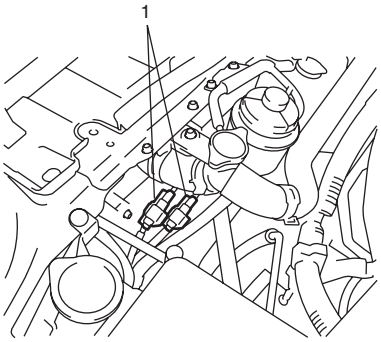


I5JB0A161014-01

3) With hose connected, detach P/S fluid reservoir with reservoir bracket.
4) Remove air cleaner case and air cleaner suction pipe (2).
5) Remove reservoir (1) from radiator.

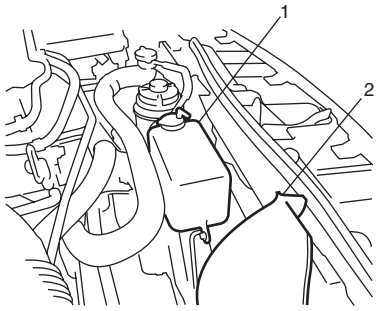


I5JB0A161015-01

6) Remove cooling fan assembly.

### Installation

Reverse removal procedure for installation noting the following.

- Refill cooling system referring to Step 7) to 17) of "Cooling System Flush and Refill: ".
- After installation, verify there is no coolant leakage at each connection.

## Radiator On-Vehicle Inspection and Cleaning

S5JB0A1606013

### Inspection

Check radiator for leakage or damage. Straighten bent fins, if any.

### Cleaning

Clean frontal area of radiator cores.

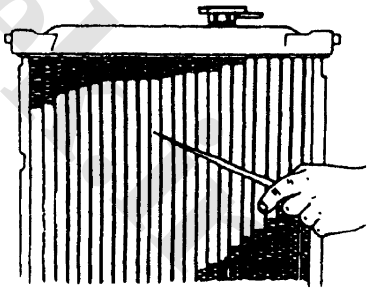

I2RH01160014-01

www.cargeek.ir

www.CarGeek.ir

## Radiator Removal and Installation

S5JB0A1606014

### Removal

1) Disconnect negative cable at battery.
2) For A/T, drain A/T fluid referring to “A/T Fluid Change: in Section 5A”.
3) Drain coolant.
4) Remove cooling fan assembly referring to “Radiator Cooling Fan Assembly Removal and Installation: ”.
5) For A/T, remove A/T fluid cooler inlet and outlet hoses.
6) Remove radiator outlet hose from radiator.
7) Remove condenser bolts from condenser brackets.
8) Remove radiator from vehicle.

### Installation

Reverse removal procedures, noting the following.

- Refill cooling system referring to Step 7) to 17) of “Cooling System Flush and Refill: ”.
- After installation, verify there is no coolant leakage each connection.
- Refill A/T fluid referring to “A/T Fluid Change: in Section 5A”.

## Water Pump Removal and Installation (For M16 Engine Model)

S5JB0A1606017

### Removal

1) Disconnect negative cable at battery.
2) Drain coolant.
3) Remove water pump and generator drive belt referring to “Water Pump and Generator Drive Belt Removal and Installation (For M16 Engine): in Section 1J”.
4) Remove water pump assembly (1).

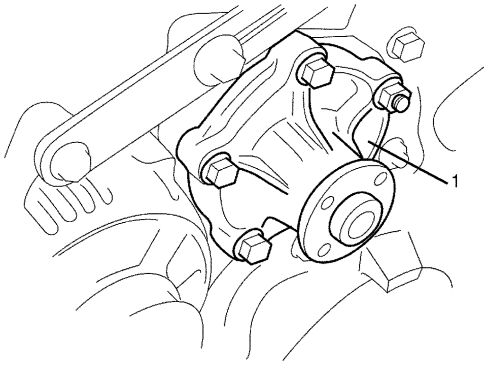


I2RH0B160016-01

### Installation

1) Apply sealant to mating surface of water pump (1) as shown in the figure.

**“A”: Water tight sealant 99000–31250 (SUZUKI Bond No.1207F)**

**<u>Sealant quantity (to mating surface of water pump)</u>**
**Width “a”: 3 mm (0.12 in.)**
**Height “b”: 2 mm (0.08 in.)**

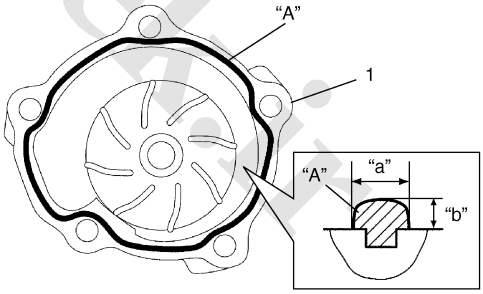


I3RM0A160016-01

www.cargeek.ir

www.CarGeek.ir


2) Install water pump assembly (1) to cylinder block and tighten bolts and nut to specified torque.

**Tightening torque**
**Water pump bolt and nut (a): 25 N·m (2.5 kgf-m, 18.0 lb-ft)**

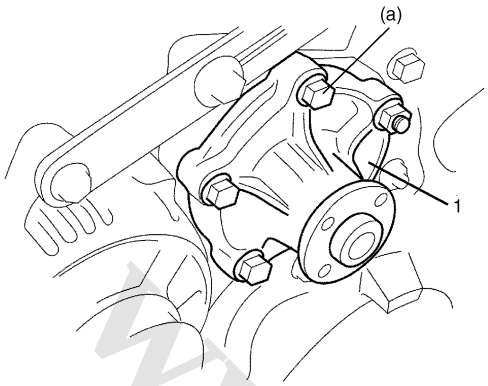


I2RH0B160018-01

3) Install water pump pulley.
4) Install water pump and generator drive belt referring to “Water Pump and Generator Drive Belt Removal and Installation (For M16 Engine): in Section 1J”.
5) Install P/S pump and A/C compressor drive belt (if equipped) referring to “P/S Pump and A/C Compressor (If Equipped) Drive Belt Removal and Installation for M16 Engine Model: in Section 6C”.
6) Refill cooling system referring to Step 7) to 17) of “Cooling System Flush and Refill: ”.
7) Connect negative cable at battery.
8) Check each part for leakage.

## Water Pump Removal and Installation (For J20 Engine Model)

S5JB0A1606023

### Removal

1) Disconnect negative cable at battery.
2) Drain coolant referring to “Cooling System Draining: ”.
3) Remove water pump and generator drive belt referring to “Water Pump and Generator Drive Belt Removal and Installation (For J20 Engine): in Section 1J”.
4) Remove thermostat referring to “Thermostat Removal and Installation (For J20 Engine Model): ”.
5) Disconnect heater pipe (2) from water pump (1).
6) Remove water pump (1) from cylinder block (3).

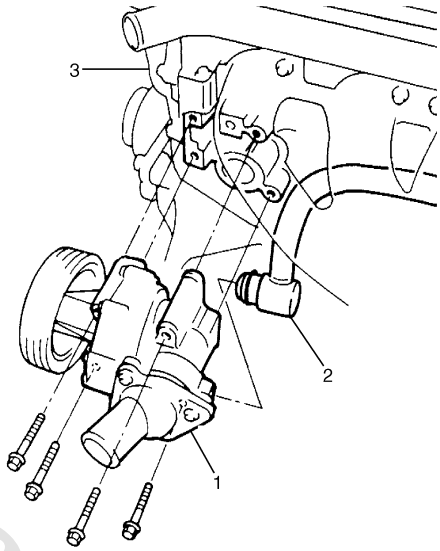


I5JB0A161016-01

### Installation

Reverse removal procedure for installation noting the following points.

- Use new O-ring when installing.
- Install water pump assembly to cylinder block and tighten bolts to specified torque.

  **Tightening torque**
  **Water pump bolt: 25 N·m (2.5 kgf-m, 18.0 lb-ft)**

- Refill cooling system referring to Step 7) to 17) of “Cooling System Flush and Refill: ”.
- Verify that there is no coolant leakage at each connection.

www.cargeek.ir

www.CarGeek.ir

### Water Pump Inspection

S5JB0A1606018

**⚠ CAUTION**

**Do not disassemble water pump.**
**If any repair is required on pump, replace it as assembly.**

Rotate water pump by hand to check for smooth operation. If pump does not rotate smoothly or makes abnormal noise, replace it.

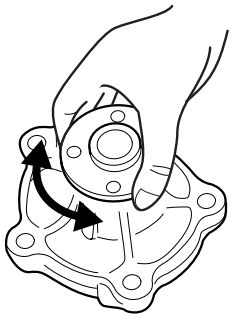

I2RH0B160019-01

## Specifications

### Tightening Torque Specifications

S5JB0A1607001

| Fastening part | Tightening torque | | | Note |
|---|---|---|---|---|
| | N·m | kgf-m | lb-ft | |
| Water pump bolt and nut | 25 | 2.5 | 18.0 | ☞ |
| Water pump bolt | 25 | 2.5 | 18.0 | ☞ |

**NOTE**

**The specified tightening torque is also described in the following.**
**“Cooling System Components: ”**

**Reference:**
For the tightening torque of fastener not specified in this section, refer to “Fastener Information:  in Section 0A”.

## Special Tools and Equipment

### Recommended Service Material

S5JB0A1608001

| Material | SUZUKI recommended product or Specification | | Note |
|---|---|---|---|
| Water tight sealant | SUZUKI Bond No.1207F | P/No.: 99000–31250 | ☞ |

www.cargeek.ir

www.CarGeek.ir


# Fuel System

## Precautions

### Precautions on Fuel System Service

S5JB0A1700001

**⚠ WARNING**

**Before attempting service of any type on fuel system, the following should be always observed in order to reduce the risk or fire and personal injury.**

- **Disconnect negative cable at battery.**
- **Do not smoke, and place no smoking signs near work area.**
- **Be sure to have $CO_2$ fire extinguisher handy.**
- **Be sure to perform work in a well-ventilated area and away from any open flames (such as gas hot heater).**
- **Wear safety glasses.**
- **To relieve fuel vapor pressure in fuel tank, remove fuel filler cap from fuel filler neck and then reinstall it.**
- **As fuel feed line is still under high fuel pressure even after stopping engine, loosening or disconnecting fuel feed line directly may cause dangerous spout of fuel. Before loosening or disconnecting fuel feed line, make sure to relieve fuel pressure referring to "Fuel Pressure Relief Procedure: ".**
- **A small amount of fuel may be released when the fuel line is disconnected. In order to reduce the risk of personal injury, cover a shop cloth to the fitting to be disconnected. Be sure to put that cloth in an approved container after disconnecting.**
- **Never run engine with fuel pump relay disconnected when engine and exhaust system are hot.**
- **Note that fuel hose connection varies with each type of pipe. Be sure to connect and clamp each hose correctly referring to "Fuel Hose Disconnecting and Reconnecting: ".**
  **After connecting, make sure that it has no twist or kink.**
- **When installing injector or fuel feed pipe, lubricate its O-ring with gasoline.**

## General Description

### Fuel System Description

S5JB0A1701001

**⚠ CAUTION**

**This engine requires the unleaded fuel only. The leaded and/or low lead fuel can result in engine damage and reduce the effectiveness of the emission control system.**

The main components of the fuel system are fuel tank, fuel pump assembly (with fuel filter and fuel level gauge), fuel pressure regulator, fuel feed line and fuel vapor line. For the details of fuel flow, refer to "Fuel Delivery System Diagram: ".

### Fuel Delivery System Description

S5JB0A1701002

The fuel delivery system consists of the fuel tank, fuel pump assembly (with built-in fuel filter), fuel pressure regulator, delivery pipe, injectors, fuel return line, fuel vapor line and fuel feed line.
The fuel in the fuel tank is pumped up by the fuel pump, sent into delivery pipe and injected by the injectors.
As the fuel pump assembly is equipped with built-in fuel filter, the fuel is filtered and its pressure is regulated after being sent to the feed pipe.
The excess fuel at fuel pressure regulation process is returned back into the fuel tank.
Also, fuel vapor generated in fuel tank is led through the fuel vapor line into the EVAP canister.
For system diagram, refer to "Fuel Delivery System Diagram: ".

www.cargeek.ir

www.CarGeek.ir

## Fuel Pump Description

S5JB0A1701003

The fuel pump (1) is an in-tank type electric pump. Incorporated in the pump assembly are;
a fuel filter (2) included and a fuel level gauge (3) attached.
Also, the jet pump (4) installed in the fuel pump sucks up the fuel from the sub fuel level sensor side to main fuel level sensor side through the fuel suction pipe / hose by using the negative pressure produced when the part of pressurised fuel with the fuel pump passes the venturi (5).

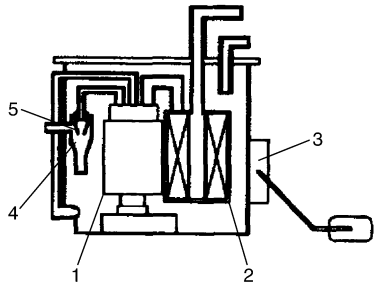


I5JB0A171001-03

# Schematic and Routing Diagram

## Fuel Delivery System Diagram

S5JB0A1702001

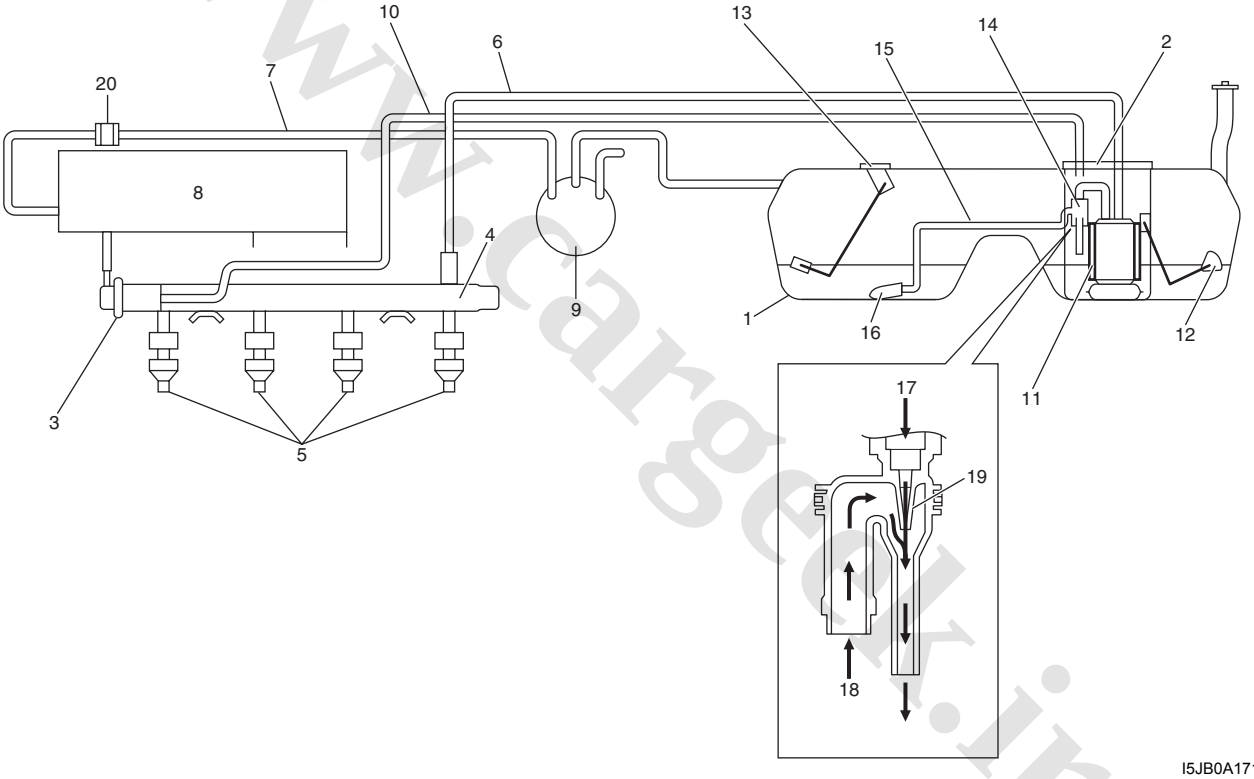


I5JB0A171002-03

| | | | |
|---|---|---|---|
| 1. Fuel tank | 6. Fuel feed line | 11. Fuel filter | 16. Fuel suction filter |
| 2. Fuel pump | 7. Fuel vapor line | 12. Main fuel level sensor | 17. Pressurised fuel from fuel pump |
| 3. Fuel pressure regulator | 8. Intake manifold | 13. Sub fuel level sensor | 18. Fuel feeded from fuel suction hose |
| 4. Delivery pipe | 9. EVAP canister | 14. Jet pump | 19. Venturi |
| 5. Fuel injector | 10. Fuel return line | 15. Fuel suction pipe / hose | 20. EVAP canister purge valve |

www.cargeek.ir

www.CarGeek.ir


# Diagnostic Information and Procedures

## Fuel Pressure Inspection

S5JB0A1704001

**⚠ WARNING**

**Before starting the following procedure, be sure to observe "Precautions on Fuel System Service: " in order to reduce the risk or fire and personal injury.**

1) Relieve fuel pressure in fuel feed line referring to "Fuel Pressure Relief Procedure: ".
2) Disconnect fuel feed hose from fuel delivery pipe.
3) Connect special tools and hose between fuel feed hose (1) and fuel delivery pipe as shown in the figure, and clamp hoses securely in order to ensure that no leaks occur during checking.

   **Special tool**
   **(A): 09912–58413**
   **(B): 09912–58490**

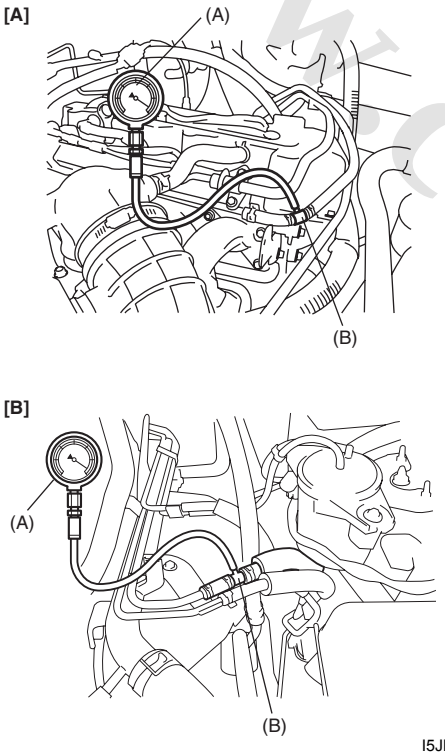


I5JB0A171003-01

| | |
|---|---|
| [A]. | For M16 engine model |
| [B]. | For J20 engine model |

4) Check that battery voltage is 11 V or more.
5) Measure fuel pressure at each condition.
   If measured pressure is out of specification, refer to "Fuel Pressure Check: in Section 1A" and check each possibly defective part. Replace if found defective.
   a) Turn ignition switch ON to operate fuel pump and after 2 seconds turn it OFF. Repeat this 3 or 4 times and then check fuel pressure.

      **Fuel pressure specification with fuel pump operating and engine stopped**
      **: 270 – 310 kPa (2.7 – 3.1 kg/cm², 38.4 – 44.0 psi)**

   b) Start engine and warm it up to normal operating temperature, and measure fuel pressure at idling.

      **Fuel pressure specification at specified idle speed**
      **: 270 – 310 kPa (2.7 – 3.1 kg/cm², 38.4 – 44.0 psi)**

   c) Stop engine, and measure fuel pressure at one minute after stopping.

      **Fuel pressure specification with 1 min. after engine (fuel pump) stop (Pressure reduces as time passes)**
      **For M16 engine model: Over 250 kPa (2.5 kg/cm², 35.6 psi)**
      **For J20 engine model: Over 200 kPa (2.0 kg/cm², 28.4 psi)**

www.cargeek.ir

www.CarGeek.ir

6) After checking fuel pressure, remove fuel pressure gauge.

**⚠ WARNING**

**As fuel feed line is still under high fuel pressure, make sure to release fuel pressure according to the following procedures.**

- **Place fuel container under joint.**
- **Cover joint with rag and loosen joint nut slowly in order to release fuel pressure gradually.**

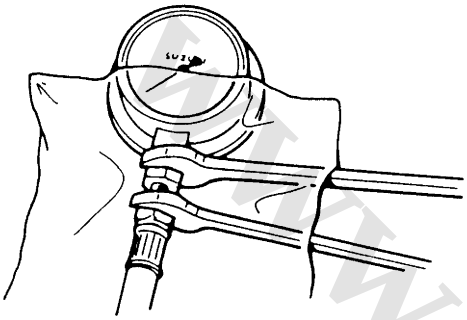

I2RH01170032-01

7) Remove special tools from fuel delivery pipe and fuel feed hose.
8) Connect fuel feed hose to fuel delivery pipe and clamp it securely.
9) With engine OFF and ignition switch ON, check for fuel leaks.

## Fuel Cut Operation Inspection

S5JB0A1704002

**NOTE**

**Before inspection, make sure that gear shift lever is in neutral position (shift select lever is "P" range for A/T vehicle), A/C is OFF and parking brake lever is pulled all the way up.**

1) Warm engine up to normal operating temperature.
2) While listening to sound of injector (2) by using sound scope (1) or such, increase engine speed to higher than 3,000 r/min.

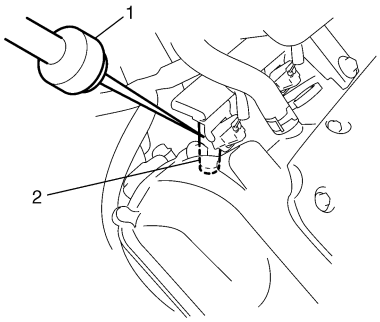


I2RH0B170004-01

3) Check to make sure that injector operation sound is stop when throttle valve is closed instantly and it is heard again when engine speed is reduced to approx. 2,000 r/min or less.

www.cargeek.ir

# Repair Instructions

## Fuel System Components

S5JB0A1706001

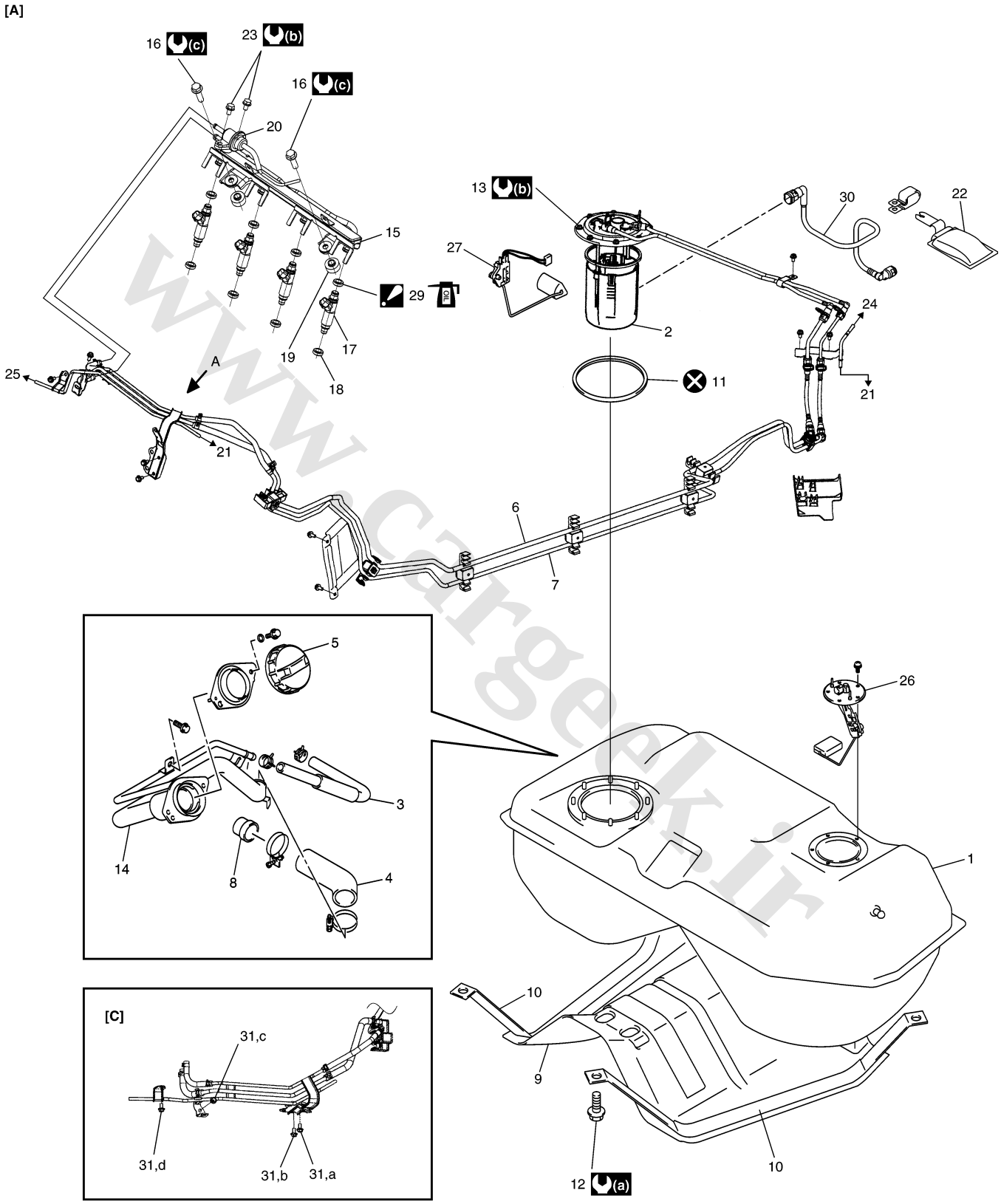


I5JB0A170001-03

www.CarGeek.ir

[B]

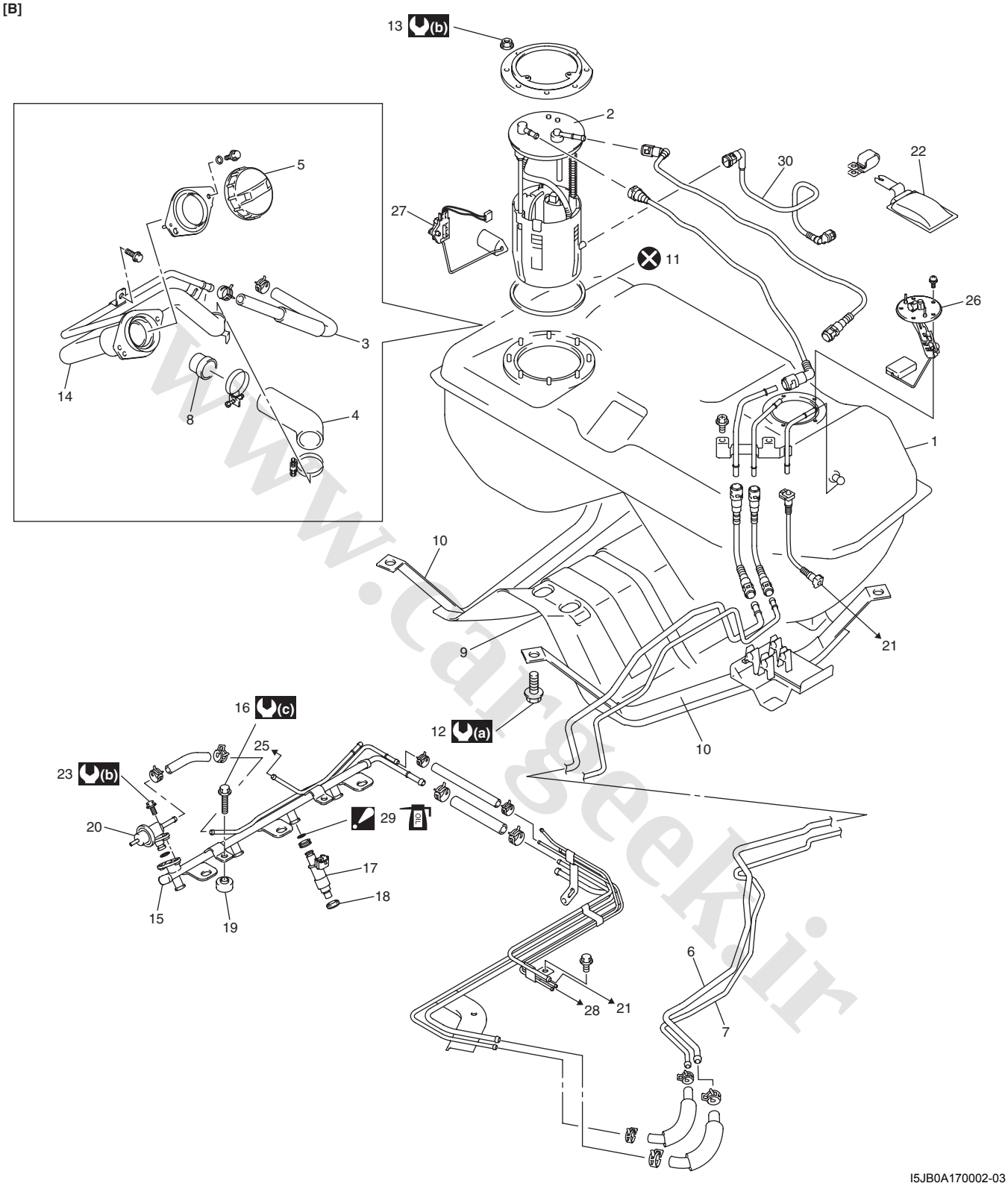


www.cargeek.ir

www.CarGeek.ir


| | | |
|---|---|---|
| [A]: For M16 engine model | 11. Fuel pump gasket | 24. To fuel tank |
| [B]: For J20 engine model | 12. Fuel tank bolt | 25. To EVAP canister purge valve |
| [C]: View A | 13. Fuel pump bolt | 26. Sub fuel level sensor |
| 1. Fuel tank | 14. Fuel filler neck | 27. Main fuel level sensor |
| 2. Fuel pump assembly | 15. Fuel delivery pipe | 28. To vacuum tank |
| 3. Breather hose | 16. Fuel delivery pipe bolt | 29. O-ring<br>: Apply O-ring oil 99000-25320 to O-ring. |
| 4. Fuel tank filler hose | 17. Fuel injector | 30. Fuel suction hose |
| 5. Fuel filler cap | 18. Injector cushion | 31. Fuel pipe bolt<br>: Tighten bolts as alphabetical order (a through d). |
| 6. Fuel feed line | 19. Fuel delivery pipe insulator | : Do not reuse. |
| 7. Fuel return line | 20. Fuel pressure regulator | (a) : 50 N·m (5.0 kgf-m, 36.5 lb-ft) |
| 8. Fuel tank inlet valve | 21. To canister | (b) : 11 N·m (1.1 kgf-m, 8.0 lb-ft) |
| 9. Fuel tank protector | 22. Fuel suction filter | (c) : 25 N·m (2.5 kgf-m, 18.0 lb-ft) |
| 10. Fuel tank belt | 23. Fuel pressure regulator bolt | |

www.cargeek.ir

www.cargeek.ir

www.CarGeek.ir

## Fuel Hose Disconnecting and Reconnecting

S5JB0A1706023

**⚠ WARNING**

**Before starting the following procedure, be sure to observe “Precautions on Fuel System Service: ” in order to reduce the risk or fire and personal injury.**

Be sure to connect and clamp each hose correctly as shown in figure.

### For Normal Clamp

### Fuel tank system

**NOTE**

**Be sure to install hose to spool of pipe surely.**

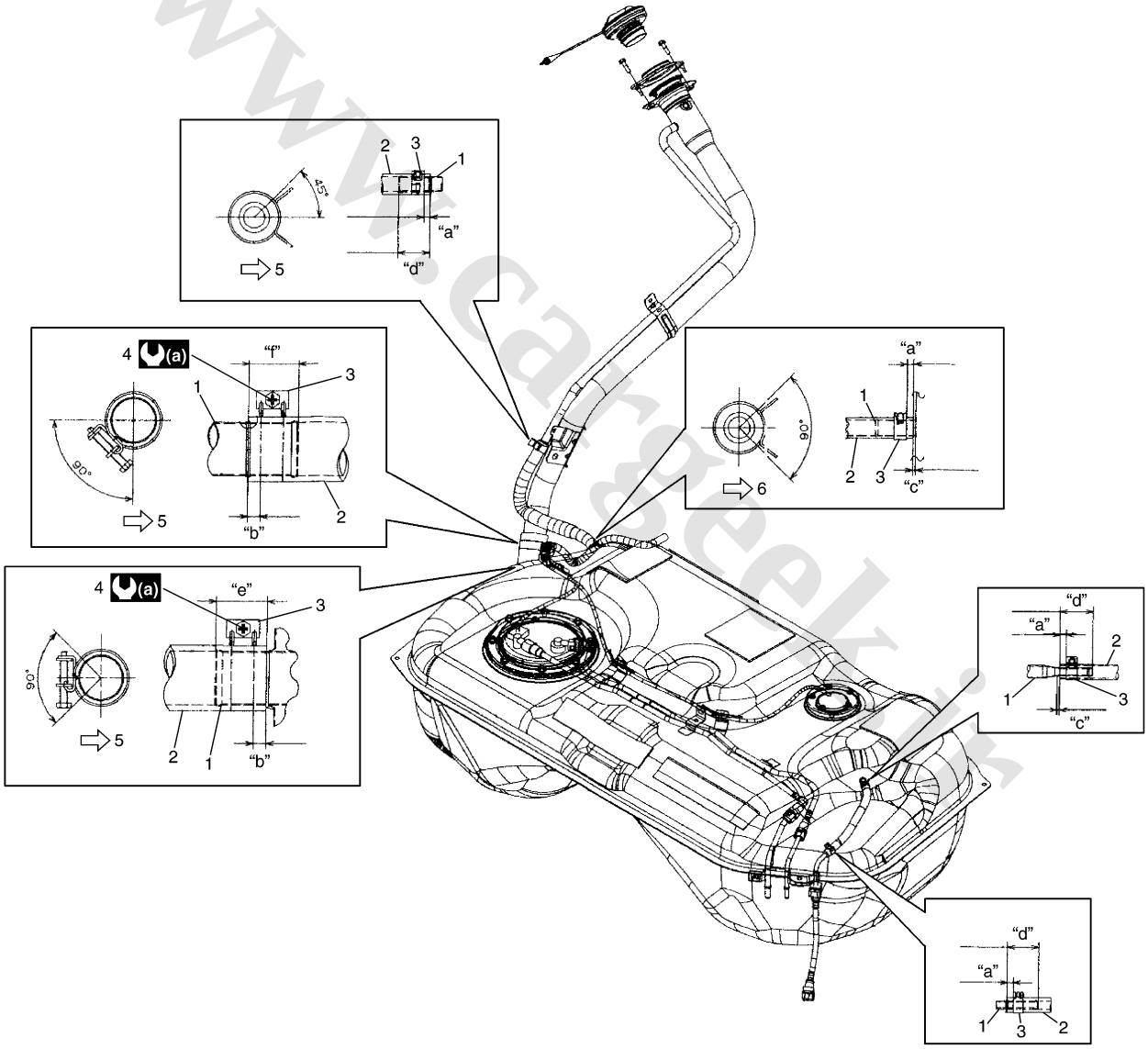


I5JB0A170003-01

| | | |
|---|---|---|
| 1. Pipe | 6. Vehicle backward (for M16 engine model)<br>Vehicle forward (for J20 engine model) | “e”: 33 mm (1.30 in.) |
| 2. Hose | “a”: 3 – 7 mm (0.12 – 0.28 in.) | “f”: 38 mm (1.50 in.) |
| 3. Clamp | “b”: 5 – 12 mm (0.20 – 0.48 in.) | (a) : 2 N·m (0.2 kgf-m, 1.5 lb-ft) |
| 4. Fuel filler hose clamp screw | “c”: 2 mm (0.08 in.) | |
| 5. Vehicle forward | “d”: 25 – 30 mm (0.98 – 1.18 in.) | |

www.cargeek.ir

www.CarGeek.ir


### The other than fuel tank system

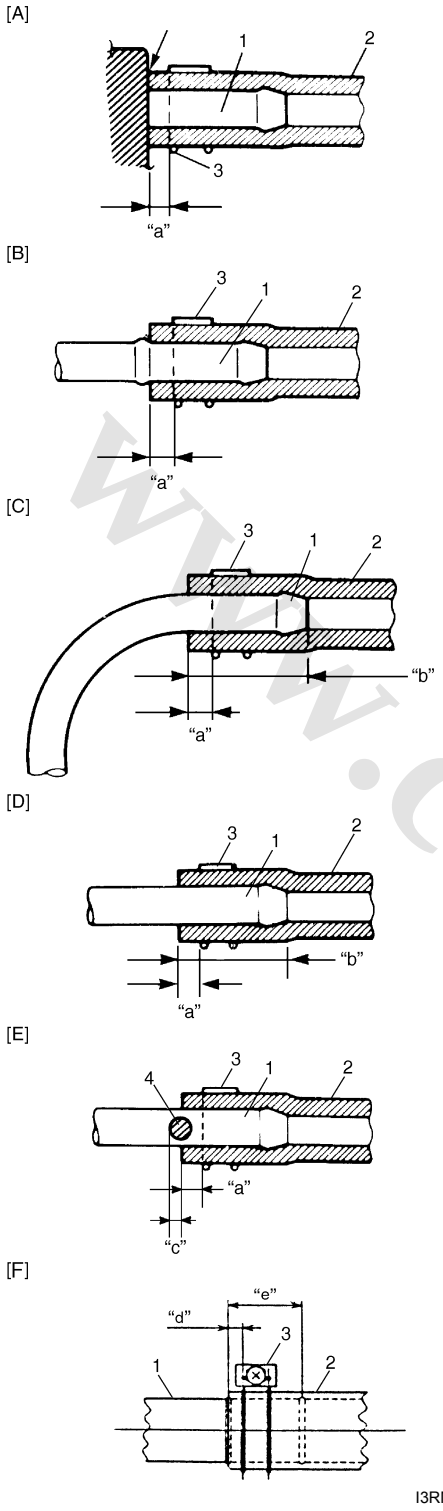


| | |
|---|---|
| [A]: | With short pipe, fit hose as far as it reaches pipe joint as shown. |
| [B]: | With the following type pipe, fit hose as far as its peripheral projection as shown. |
| [C]: | With bent pipe, fit hose as its bent part as shown or till depth "b". |
| [D]: | With straight pipe, fit hose till depth "b". |
| [E]: | With red marked pipe, fit hose end reaches red mark on pipe. |
| [F]: | For fuel tank filler hose, insert it to spool or welding-bead. |
| "a": | Clamp securely at a position 3 – 7 mm (0.12 – 0.27 in.) from hose end. |
| "b": | 20 – 30 mm (0.79 – 1.18 in.) |
| "c": | 0 – 5 mm (0 – 0.19 in.) |
| "d": | 5 – 12 mm (0.2 – 0.47 in.) |
| "e": | 40 mm (1.57 in.) |
| 4. | Red mark |

### For Quick Joint (other than Fuel Vapor Line)

#### Disconnecting

1) Remove mud, dust and/or foreign material between pipe (1) and quick joint (2) by blowing compressed air.
2) Unlock joint lock by inserting special tool between pipe and quick joint.

   **Special tool**
   **(A): 09919–47020**

3) Disconnect quick joint from pipe.

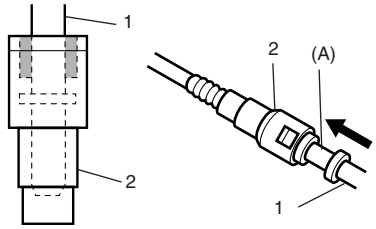


#### Reconnecting

Insert quick joint to fuel pipe until they lock securely (a click is heard), and confirm that quick joint is not disconnected by hand.

www.cargeek.ir

www.CarGeek.ir

### For Quick Joint (Fuel Vapor Line)

#### Disconnecting

1) Remove mud, dust and/or foreign material between pipe (1) and quick joint (fuel vapor line) (2) by blowing compressed air.
2) Release lock plate (3) completely in arrow direction, and then remove quick joint (fuel vapor line) (2) from fuel pipe (4).

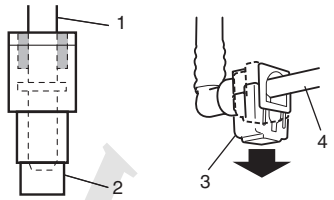

I5JB0A171004-01

#### Reconnecting

1) Connect quick joint (fuel vapor line) (1) to fuel pipe (2), and then push lock plate (3) completely in arrow direction.

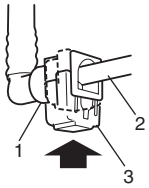

I5JB0A171005-01

2) Confirm that quick joint is not disconnected by hand.

## Fuel Pressure Relief Procedure

S5JB0A1706002

**⚠ CAUTION**

**This work must not be done when engine is hot. If done so, it may cause adverse effect to catalyst.**

**NOTE**

**If ECM detects DTC(s) after servicing, clear DTC(s) referring to "DTC Clearance: in Section 1A".**

1) Make sure that engine is cold.
2) Shift transaxle gear shift lever in "Neutral" (shift select lever in "P" range for A/T model), set parking brake and block drive wheels.
3) Remove fuse box No.2 cover.
4) Disconnect fuel pump relay (1) from fuse box No.2 (2).
5) Remove fuel filter cap in order to release fuel vapor pressure in fuel tank, and then reinstall it.
6) Start engine and run it until engine stops for lack of fuel. Repeat cranking engine 2 – 3 times for about 3 seconds each time in order to dissipate fuel pressure in lines. Fuel connections are now safe for servicing.
7) After servicing, connect fuel pump relay (1) to fuse box No.2 and install fuse box No.2 cover.

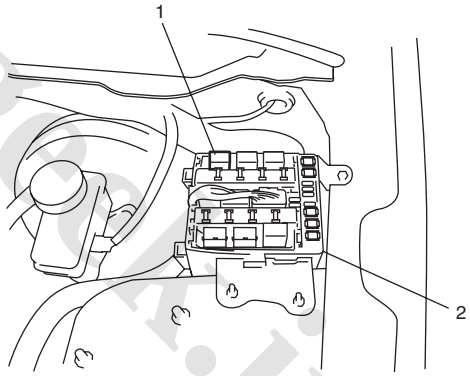

I5JB0A171006-01

## Fuel Leakage Check Procedure

S5JB0A1706003

After performing any service on fuel system, check to make sure that there are no fuel leakages as follows.

1) Turn ON ignition switch for 3 seconds (to operate fuel pump) and then turn it OFF.
   Repeat this (ON and OFF) 3 or 4 times and apply fuel pressure to fuel line until fuel pressure is felt by hand placed on fuel feed hose.
2) In this state, check to see that there are no fuel leakages from any part of fuel system.

www.cargeek.ir

www.CarGeek.ir


## Fuel Lines On-Vehicle Inspection

S5JB0A1706004

**⚠ CAUTION**

**Due to the fact that fuel feed line (1) is under high pressure, use special care when servicing it.**

Visually inspect fuel lines for evidence of fuel leakage, hose crack and deterioration or damage.
Make sure all clamps are secure.
Replace parts as needed.

## Fuel Pipe Removal and Installation

S5JB0A1706005

**⚠ WARNING**

**Before starting the following procedure, be sure to observe "Precautions on Fuel System Service: " in order to reduce the risk or fire and personal injury.**

### Removal

1) Relieve fuel pressure in fuel feed line according to "Fuel Pressure Relief Procedure: ".
2) Disconnect negative cable at battery.
3) Disconnect fuel pipe joint and fuel hose (3) from fuel pipe (2) at the front and rear of each fuel pipe referring to "Fuel Hose Disconnecting and Reconnecting: ".
4) Mark the location of clamps (1) on fuel pipes (2), so that the clamps can be reinstalled to where they were.
5) Remove pipes (2) with clamp (1) from vehicle.
6) Remove clamp (1) from pipes (2).

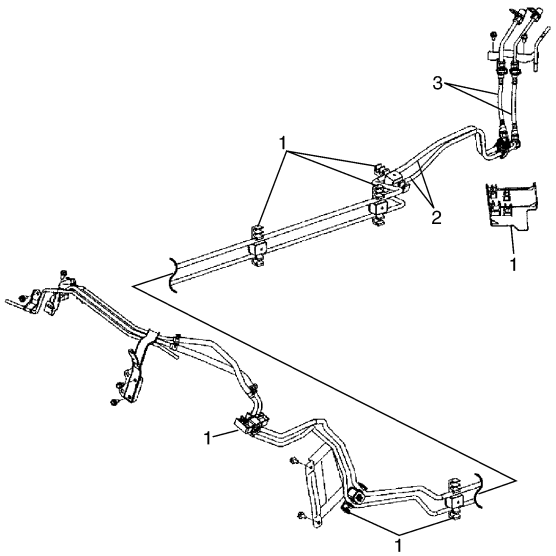


I5JB0A170006-03

### Installation

1) Install clamps to marked®® location on pipes. If clamp is deformed, its claw is bent or broken, replace it with new one.
2) Install pipes with pipe clamps to vehicle.

**NOTE**

**For M16 engine model, be sure to tighten fuel pipe bolt as specified tightening order described in "Fuel System Components: ".**

3) Connect fuel hoses and pipes to each pipe referring to "Fuel Hose Disconnecting and Reconnecting: ".
4) Connect negative cable at battery.
5) With engine OFF, turn ignition switch to ON position and check for fuel leaks.

## Fuel Injector On-Vehicle Inspection

S5JB0A1706006

1) Using sound scope (1) or such, check operating sound of injector (2) when engine is running or cranking.
   Cycle of operating sound should vary according to engine speed.
   If no sound or an unusual sound is heard, check injector circuit (wire or coupler) or injector.

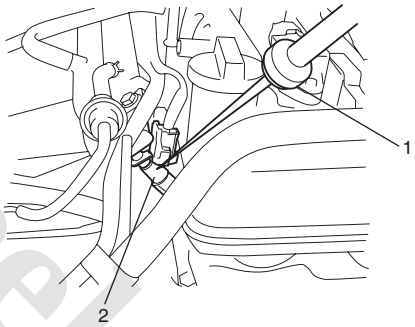


I5JB0A171007-01

2) Disconnect connector (1) from injector, connect ohmmeter between terminals of injector and check resistance.

**<u>Reference resistance of fuel injector</u>**
**12 Ω at 20 °C, 68 °F**

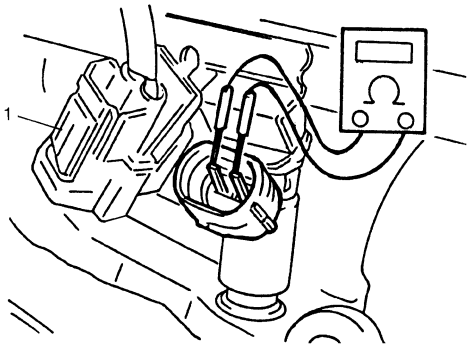


I2RH0B170008-01

3) Connect connector to injector securely.

www.cargeek.ir

www.CarGeek.ir

## Fuel Injector Removal and Installation

S5JB0A1706007

**⚠ WARNING**

**Before starting the following procedure, be sure to observe “Precautions on Fuel System Service: ” in order to reduce the risk or fire and personal injury.**

### Removal

1) Relieve fuel pressure according to “Fuel Pressure Relief Procedure: ”.
2) Disconnect negative cable at battery.
3) Disconnect fuel injector couplers.
4) Disconnect fuel feed hose from fuel delivery pipe (1).
5) Disconnect fuel return hose from pressure regulator.
6) Disconnect vacuum hose from pressure regulator.
7) Remove fuel delivery pipe bolts (2).
8) Remove fuel injector(s) (3).

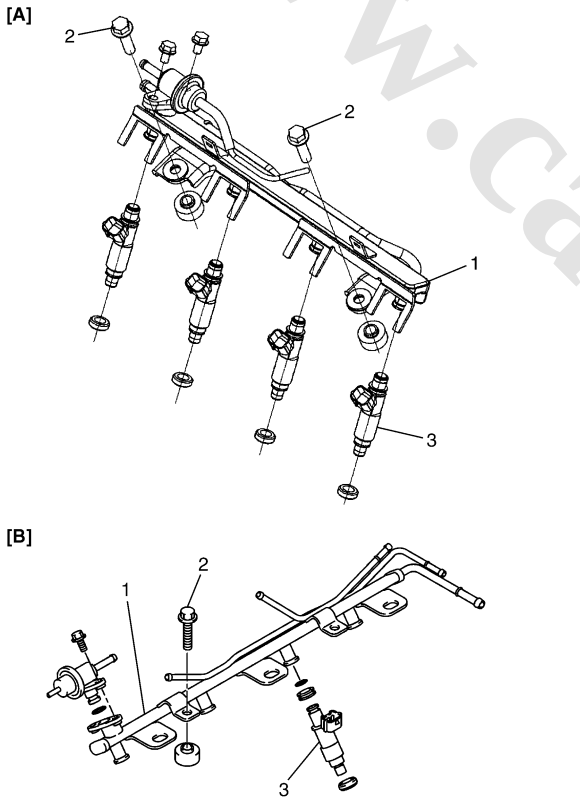


I5JB0A170007-02

| [A]: For M16 engine model | [B]: For J20 engine model |
|---|---|

### Installation

Reverse removal procedure for installation noting the following.

- Replace injector O-ring (1) with new one using care not to damage it.
- Check if cushion (2) is scored or damaged. If it is, replace with new one.
- Apply O-ring oil to O-rings (1), and then install injectors (3) into delivery pipe (4) and cylinder head. Make sure that injectors rotate smoothly (6). If not, probable cause is incorrect installation of O-ring. Replace O-ring with new one.

  **“A”: Oil 99000–25320 (SUZUKI DI O RING OIL(500CC))**

- Tighten delivery pipe bolts (5) to specified torque and make sure that injectors rotate smoothly.

  **Tightening torque**
  **Fuel delivery pipe bolt (a): 25 N·m (2.5 kgf-m, 18.0 lb-ft)**

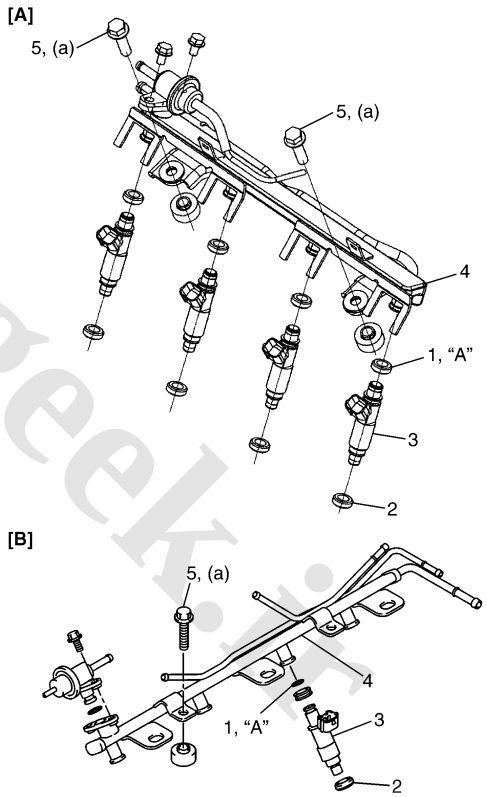


I5JB0A170008-02

www.cargeek.ir

www.CarGeek.ir


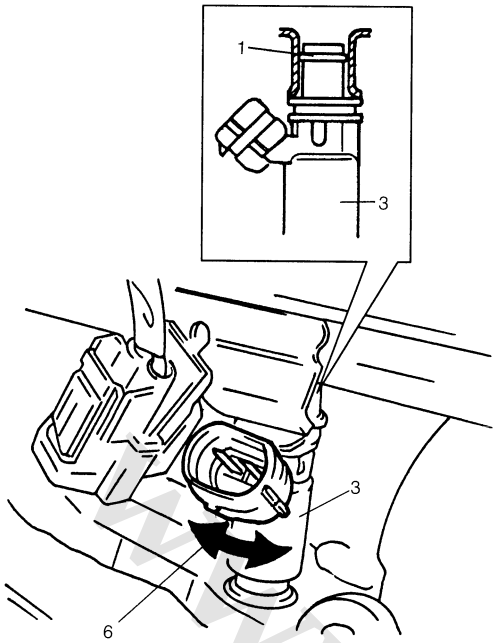


I5JB0A171008-02

| | |
|---|---|
| [A]: For M16 engine model | [B]: For J20 engine model |

- After installation, with engine OFF and ignition switch ON, check for fuel leaks around fuel line connection.

## Fuel Injector Inspection

S5JB0A1706008

**⚠ WARNING**

**Before starting the following procedure, be sure to observe "Precautions on Fuel System Service: " in order to reduce the risk or fire and personal injury.**

1) Install injector to special tool (injector checking tool).
2) Install pressure regulator to special tool (injector checking tool).

   **Special tool**
   **(A): 09912–58421**
   **(B): 09912–58442**

3) Connect special tools (hose and attachment) to fuel feed pipe (1) of vehicle.
4) Connect special tool (test lead) to injector.

   **Special tool**
   **(C): 09930–88530**

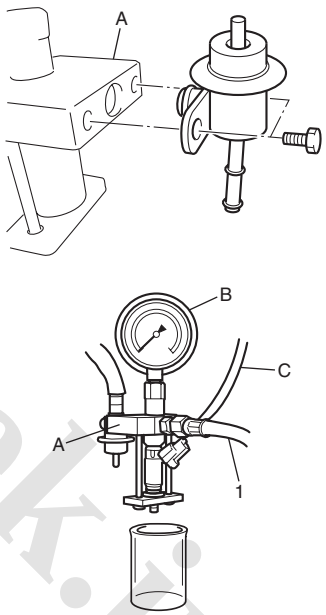


I5JB0A170004-02

www.cargeek.ir

www.CarGeek.ir

5) Install suitable vinyl tube onto injector nozzle to prevent fuel from splashing out when injecting.
6) Put graduated cylinder under injector.
7) Operate fuel pump and apply fuel pressure to injector as follows:
   a) When using scan tool:
      i) Connect scan tool to DLC with ignition switch OFF.
      ii) Turn ignition switch ON, clear DTC and select “MISC TEST” mode on scan tool.
      iii) Turn fuel pump ON by using scan tool.

      **Special tool**
      **(A): SUZUKI scan tool**

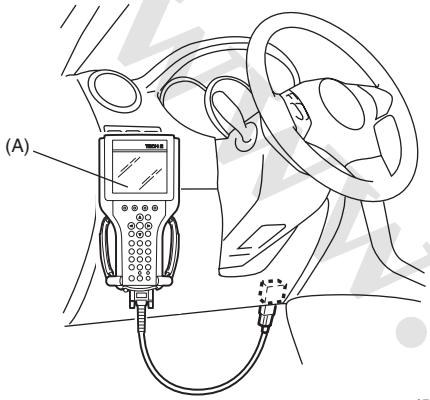

I5JB0A171009-01

   b) When not using scan tool:
      i) Remove fuel pump relay from connector.
      ii) Connect two terminals of relay connector using service wire (1) as shown in the figure.

**⚠ CAUTION**

**Check to make sure that connection is made between correct terminals. Wrong connection can cause damage to ECM, wire harness, etc.**

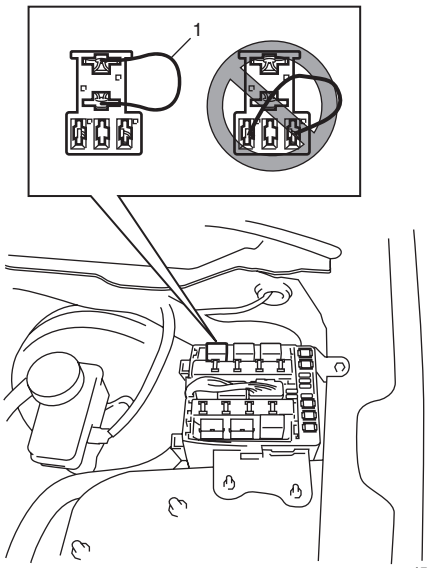

I5JB0A171010-01

      iii) Turn ignition switch ON.
8) Apply battery voltage to injector (1) for 15 seconds and measure injected fuel volume with graduated cylinder. Test each injector two or three times.

   **Reference injected fuel volume**
   **(For M16 engine model) Approx. 46 cc / 15 sec. (1.62/1.55 US/Imp oz / 15 sec.)**
   **(For J20 engine model) Approx. 65 cc / 15 sec. (2.20/2.29 US/Imp oz / 15 sec.)**

9) Check fuel leakage from injector nozzle. Do not operate injector for this check (but fuel pump should be at work). If fuel leaks (1) more than the following specifications, replace.

   **Fuel leakage**
   **Less than 1 drop/min.**

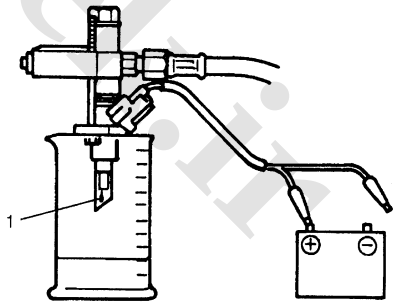

I2RH0B170013-01

www.cargeek.ir

www.CarGeek.ir


## Fuel Pressure Regulator Removal and Installation

S5JB0A1706024

**⚠ WARNING**

**Before starting the following procedure, be sure to observe "Precautions on Fuel System Service: "in order to reduce the risk or fire and personal injury.**

### Removal

1) Relieve fuel pressure according to "Fuel Pressure Regulator Inspection: "
2) Disconnect negative cable at battery.
3) Disconnect fuel return hose (1) and vacuum hose (2) from fuel pressure regulator.
4) Remove fuel pressure regulator (3) from delivery pipe.

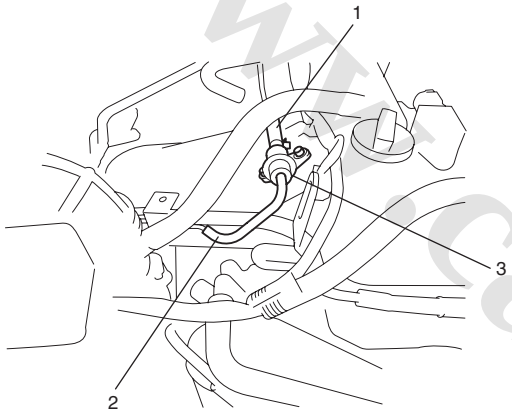


I5JB0A171011-02

### Installation

Reverse removal procedure for installation noting the following.

- Replace O-ring with new one using care not to damage it.
- Apply thin coat of fuel to O-ring and then install fuel pressure regulator (1) to delivery pipe.
- Tighten fuel pressure regulator bolts to specified torque.

  **Tightening torque**
  **Fuel pressure regulator bolt (a): 11 N·m (1.1 kgf-m, 8.0 lb-ft)**

- After installation, with engine OFF and ignition switch ON, check for fuel leaks around fuel line connection.

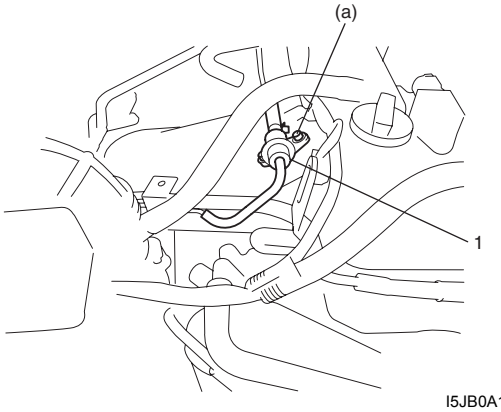


I5JB0A171012-01

## Fuel Pressure Regulator Inspection

S5JB0A1706025

Confirm fuel pressure of fuel line is decreased when fuel pressure regulator is applied negative pressure by special tool.

**Special tool**
**(A): 09917–47011**

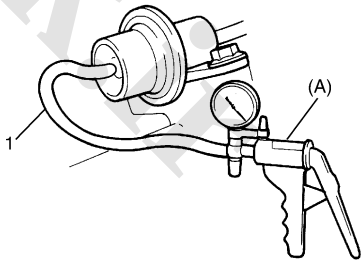


I5JB0A171013-01

www.cargeek.ir

www.CarGeek.ir

## Fuel Filler Cap Inspection

S5JB0A1706011

**⚠ WARNING**

**Before starting the following procedure, be sure to observe "Precautions on Fuel System Service: " in order to reduce the risk or fire and personal injury.**

Remove cap (1), and check gasket for even filler neck imprint, and deterioration or any damage. If gasket (2) is in malcondition, replace cap.

**NOTE**

**If cap requires replacement, only a cap with the same features should be used. Failure to use correct cap can result in fire and personal injury.**

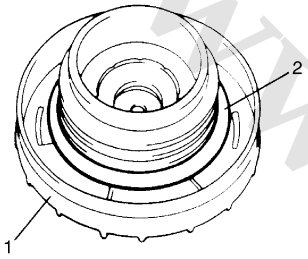


I2RH01170008-01

## Fuel Tank Inlet Valve Removal and Installation

S5JB0A1706015

**⚠ WARNING**

**Before starting the following procedure, be sure to observe "Precautions on Fuel System Service: " in order to reduce the risk or fire and personal injury.**

### Removal

1) Remove fuel filler cap.
2) Insert hose of a hand operated pump into fuel filler hose (1) and drain fuel in space "A" as shown in figure.

**⚠ CAUTION**

**Do not force pump hose into fuel tank, or pump hose may damage to fuel tank inlet valve (2).**

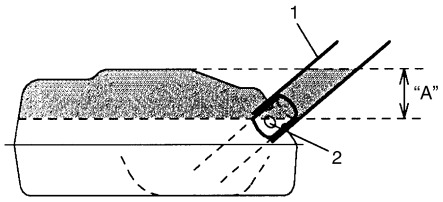


IYSQ01170010-01

3) Hoist vehicle, and remove clamp (2) and fuel filler hose (1) from fuel filler neck.

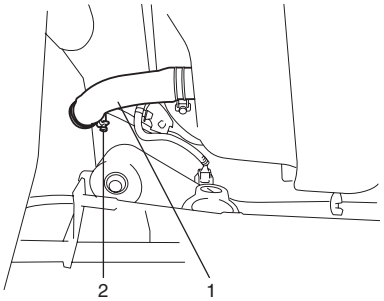


I5JB0A171014-01

4) Remove fuel tank inlet valve (1) using flat head rod (2) or the like.

**⚠ CAUTION**

**Be careful not to damage fuel tank inlet valve (1) with flat head rod (2) or the like.**

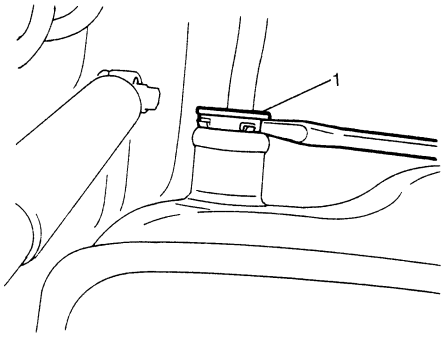


I2RH0B170017-01

### Installation

1) Install fuel tank inlet valve (1) to fuel tank.

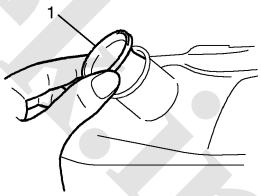


I2RH0B170018-01

2) Install fuel filler hose (1) to fuel tank and secure it with clamp (2).
For proper installation, refer to "Fuel Hose Disconnecting and Reconnecting: ".

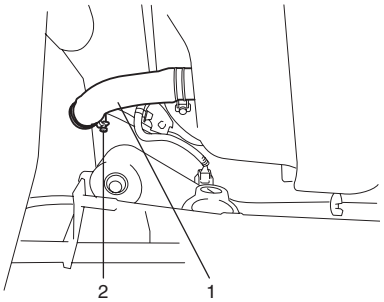


I5JB0A171014-01

3) Lower vehicle and install fuel filler cap.

www.cargeek.ir

www.CarGeek.ir


## Fuel Tank Inlet Valve Inspection

S5JB0A1706016

**⚠ WARNING**

**Before starting the following procedure, be sure to observe "Precautions on Fuel System Service: " in order to reduce the risk or fire and personal injury.**

Check fuel tank inlet valve for the following.
If any damage or malfunction is found, replace.

- Damage
- Smooth opening and closing

I5JB0A170009-01

## Fuel Tank Removal and Installation

S5JB0A1706012

**⚠ WARNING**

**Before starting the following procedure, be sure to observe "Precautions on Fuel System Service: " in order to reduce the risk or fire and personal injury.**

### Removal

1) Relieve fuel pressure in fuel feed line according to "Fuel Pressure Relief Procedure: ".
2) Disconnect negative cable at battery.
3) Hoist vehicle.
4) Remove exhaust center pipe.
5) Remove rear propeller shaft referring to "Propeller Shaft Removal and Installation: in Section 3D"
6) With cable connected, detach parking brake cable clamp from fuel tank cover referring to "Parking Brake Cable Location: in Section 4D"
7) Disconnect fuel filler hose and breather hose from filler neck referring to "Fuel Tank Inlet Valve Removal and Installation: ".
8) For J20 engine, disconnect fuel pump connector (1).

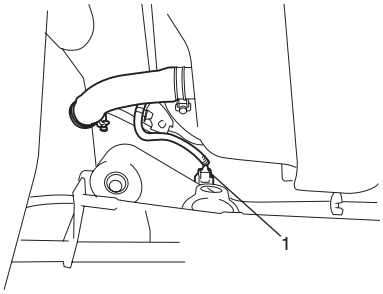


I5JB0A171015-01

9) Due to absence of fuel tank drain plug, drain fuel tank by pumping fuel out through fuel tank filler. Use hand operated pump device to drain fuel tank.

**⚠ CAUTION**

- **Do not force pump hose into fuel tank, or pump hose may damage fuel tank inlet valve.**
- **Never store fuel in an open container due to possibility of fire or explosion.**

10) Disconnect fuel pipe joint and fuel hoses (1) from fuel pipes (2) referring to "Fuel Hose Disconnecting and Reconnecting: ".

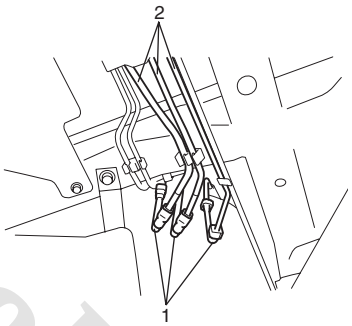


I5JB0A171016-01

11) Remove fuel tank cover (1).

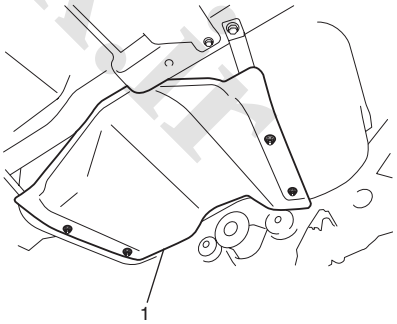


I5JB0A171017-01

www.cargeek.ir

www.CarGeek.ir

12) Support fuel tank (1) with jack (2) and remove its mounting bolts.

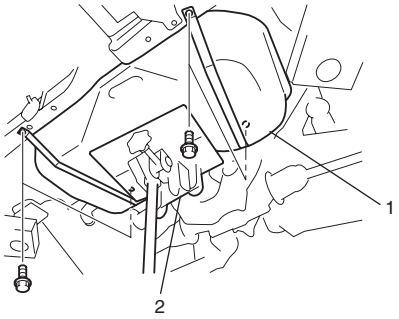


I5JB0A171018-01

13) For M16 engine, lower fuel tank a little as to disconnect connectors (1) of fuel pump (2) and sub fuel level gauge (3), then remove fuel tank.

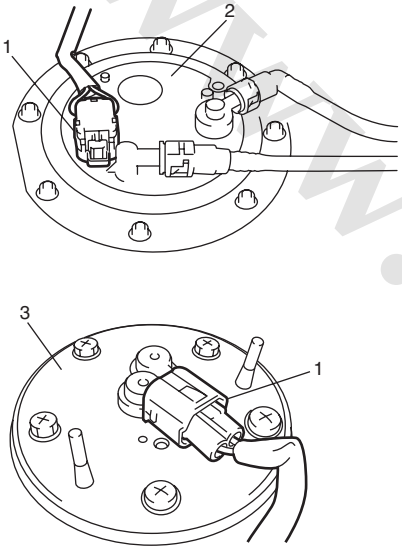


I5JB0A171019-01

**Installation**

**⚠ CAUTION**

- **When connecting joint, clean outside surfaces of pipe where joint is to be inserted, push joint into pipe till joint lock clicks and check to ensure that pipes are connected securely, or fuel leak may occur.**
- **Never let the fuel hoses touch the ABS sensor harness (if equipped).**

1) If parts have been removed from fuel tank, install them before installing fuel tank to vehicle.
2) Raise fuel tank (1) with jack, and connect connectors of fuel pump and sub fuel level gauge and clamp wire harness.
3) Install fuel tank to vehicle.

**Tightening torque**
**Fuel tank bolt (a): 50 N·m (5.0 kgf-m, 36.5 lb-ft)**

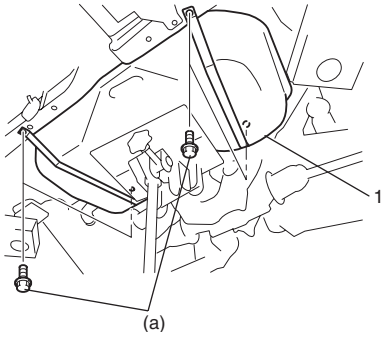


I5JB0A171020-01

4) Connect fuel filler hose (1) and breather hose to filler neck as shown in figure, and clamp them securely.

**Tightening torque**
**Fuel filler hose clamp (a): 2 N·m (0.2 kgf-m, 1.5 lb-ft)**

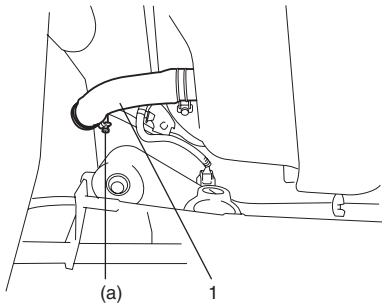


I5JB0A171021-01

5) Connect fuel feed hoses (1) to each pipe as shown in figure, and clamp them securely referring to “Fuel Hose Disconnecting and Reconnecting: ”.

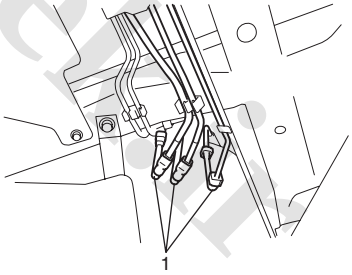


I5JB0A171022-01

6) Install fuel tank cover (1).

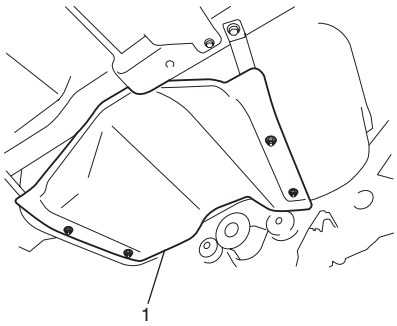


I5JB0A171017-01

www.cargeek.ir

www.CarGeek.ir


7) Install parking brake cable clamp to fuel tank cover referring to “Parking Brake Cable Location: in Section 4D”
8) Install rear propeller shaft referring to “Propeller Shaft Removal and Installation: in Section 3D”
9) Install exhaust center pipe referring to “Exhaust System Components: in Section 1K”.
10) Connect negative cable at battery.
11) With engine OFF, turn ignition switch to ON position and check for fuel leaks.

## Fuel Tank Inspection

S5JB0A1706013

After removing fuel tank, check hoses and pipes connected to fuel tank for leaks, loose connections, deterioration or damage. Also check fuel pump assembly gaskets for leaks, visually inspect fuel tank for leaks and damage.
Replace any damaged or malconditioned parts.

## Fuel Tank Purging Procedure

S5JB0A1706014

**⚠ WARNING**

- **Before starting the following procedure, be sure to observe “Precautions on Fuel System Service: ” in order to reduce the risk or fire and personal injury.**
- **This purging procedure will not remove all fuel vapor.**
  **Do not attempt any repair on tank using heat of flame as an explosion resulting in personal injury could occur.**

**⚠ CAUTION**

**Never remain water in fuel tank after washing, or fuel tank inside will get corrosion.**

The following procedure are used for purging fuel tank.

1) After removing fuel tank, remove all hoses, pipes, sub fuel level gauge and fuel pump assembly from fuel tank.
2) Drain all remaining fuel from tank.
3) Place fuel tank to flushing area.
4) Fill tank with warm water or tap water, and agitate vigorously and drain. Repeat this washing until inside of tank is clean. Replace tank if its inside is rusty.
5) Completely flush out remaining water after washing.

## Fuel Pump On-Vehicle Inspection

S5JB0A1706017

**⚠ WARNING**

**Before starting the following procedure, be sure to observe “Precautions on Fuel System Service: ” in order to reduce the risk or fire and personal injury.**

1) Remove filler cap and turn ON ignition switch (2). Then fuel pump operating sound should be heard from fuel filler (1) for about 2 seconds and stop. Be sure to reinstall fuel filler cap after checking.
   If the check result is not satisfactory, go to “Fuel Pump and Its Circuit Check: in Section 1A”.

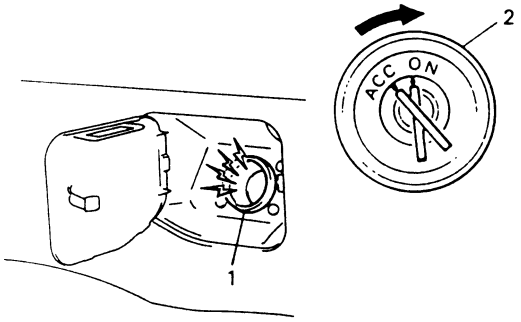


IVSY01170013-01

2) Turn OFF ignition switch and leave over 10 minutes as it is.
3) Fuel pressure should be felt at fuel feed hose (1) for about 2 seconds after ignition switch ON.
   If fuel pressure is not felt, go to “Fuel Pressure Check: in Section 1A”.

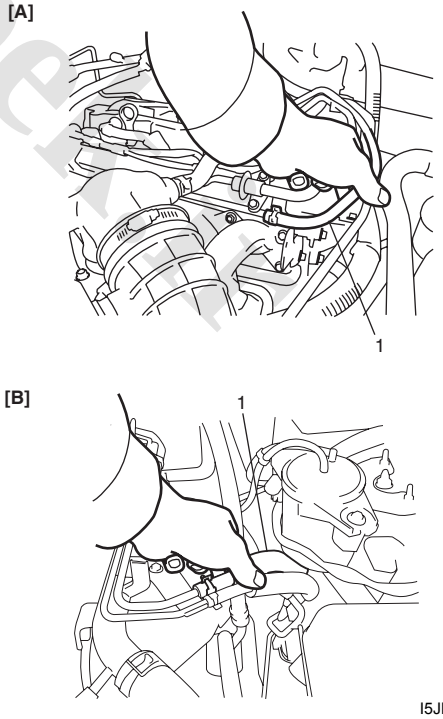


I5JB0A171023-01

| | |
|---|---|
| [A]. | For M16 engine model |
| [B]. | For J20 engine model |

www.cargeek.ir

www.CarGeek.ir

## Fuel Pump Assembly Removal and Installation

S5JB0A1706019

**⚠ WARNING**

**Before starting the following procedure, be sure to observe “Precautions on Fuel System Service: ” in order to reduce the risk or fire and personal injury.**

### Removal

1) Remove fuel tank from vehicle Refer to “Fuel Tank Removal and Installation: ”.
2) Disconnect fuel feed pipe (1) and fuel return pipe (3) from fuel pump assembly (2) referring to “Fuel Hose Disconnecting and Reconnecting: ”.

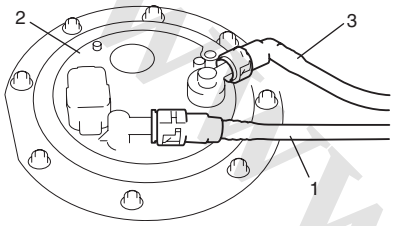


I5JB0A171024-01

3) Disconnect fuel suction hose (2) referring to “Fuel Hose Disconnecting and Reconnecting: ”.
4) Remove fuel pump assembly (1) from fuel tank.

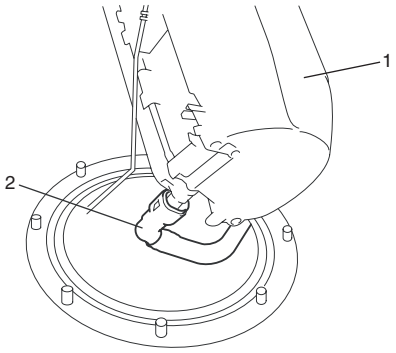


I5JB0A170005-01

### Installation

**⚠ CAUTION**

**When connecting joint, clean outside surface of pipe where joint is to be inserted, push joint into pipe till joint lock clicks and check to ensure that pipes are connected securely, or fuel leak may occur.**

1) Clean mating surfaces of fuel pump assembly (1) and fuel tank.
2) Put plate (2) on fuel pump assembly (1) by matching the protrusion of fuel pump assembly (3) to plate hole (4) as shown.

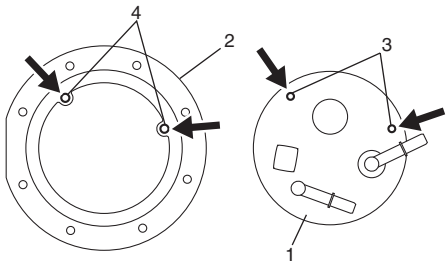


I5JB0A171025-01

3) Install new gasket (2) and fuel pump assembly (1) with plate (3) to fuel tank (4).

**Tightening torque**
**Fuel pump assembly bolt (a): 11 N·m (1.1 kgf-m, 8.0 lb-ft)**

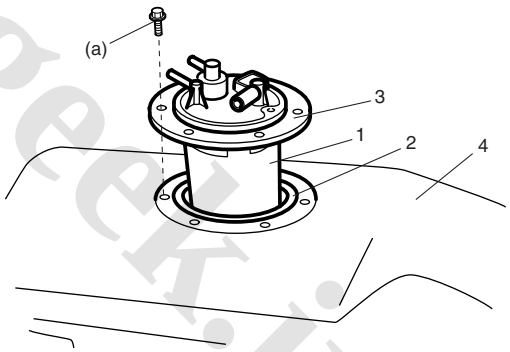


I3RM0A170023-01

4) Connect fuel feed pipe (1) (pipe joint) and fuel return pipe (3) (pipe joint) to fuel pump assembly (2).

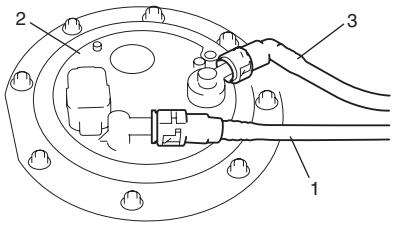


I5JB0A171024-01

5) Install fuel tank to vehicle. Refer to “Fuel Tank Removal and Installation: ”.

www.cargeek.ir

www.CarGeek.ir


## Main Fuel Level Sensor Removal and Installation

S5JB0A1706022

⚠ **CAUTION**

- **Do not touch resister plate (1) and deform arm (2). It may cause main fuel level sensor to fail.**
- **Be very careful not to cause damage to fuel tube installed section (sealed section in bore). If it be damaged, replace it with new one, or fuel will leak from the part.**

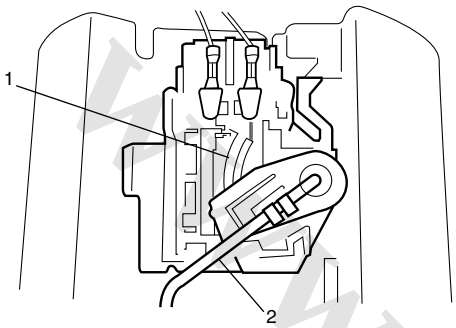


I4RS0A170016-01

### Removal

1) Remove fuel pump assembly from fuel tank referring to “Fuel Pump Assembly Removal and Installation: ”.
2) Disconnect main fuel level sensor connector (3).
3) With pressing snap-fit part (2), remove main fuel level sensor (1) by sliding it in the arrow direction as shown in figure.

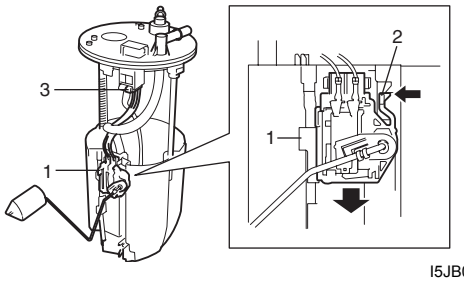


I5JB0A171026-01

### Installation

Reverse removal procedure for installation.

## Fuel Pump Inspection

S5JB0A1706021

- Check fuel pump assembly for damage.
- Check fuel suction filter for evidence of dirt and contamination.
  If present, replace or clean and check for presence of dirt in fuel tank.
- For electrical circuit, refer to “Fuel Pressure Check: in Section 1A”.
- For inspection of main fuel level sensor (1), refer to “Fuel Level Sensor Inspection: in Section 9C”.

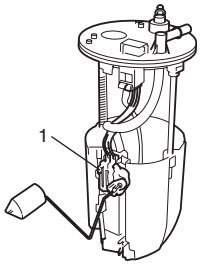


I5JB0A171027-01

## Sub Fuel Level Sensor Removal and Installation

S5JB0A1706026

⚠ **CAUTION**

- **Do not touch resister plate (1) and deform arm (2). It may cause sub fuel level sensor to fail.**

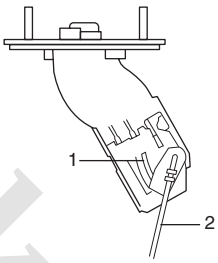


I5JB0A171028-01

www.cargeek.ir

www.CarGeek.ir

**Removal**

1) Remove fuel tank from vehicle Referring to “Fuel Tank Removal and Installation: ”
2) Disconnect sub fuel level sensor connector (1).
3) Remove sub fuel level sensor (2).

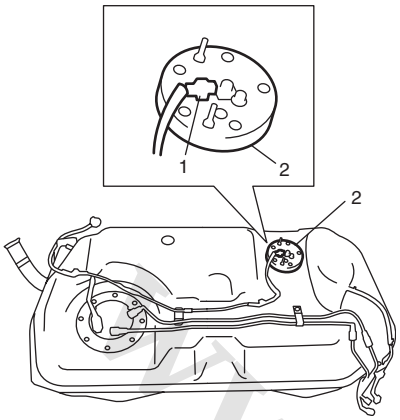


I5JB0A171029-01

**Installation**

Reverse removal procedure for installation noting the following.

- Replace O-ring with new one using care not to damage it.
- Apply thin coat of fuel to O-ring, and then install sub fuel level sensor.

## Sub Fuel Level Sensor Inspection

S5JB0A1706027

- Check sub fuel level sensor for damage.
- For inspection of sub fuel sensor (1), refer to “Fuel Level Sensor Inspection: in Section 9C”

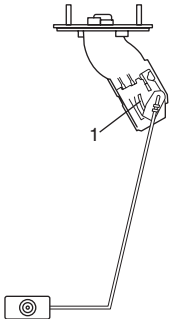


I5JB0A171030-01

# Specifications

## Tightening Torque Specifications

S5JB0A1707001

| Fastening part | Tightening torque | | | Note |
|---|---|---|---|---|
| | N·m | kgf-m | lb-ft | |
| Fuel delivery pipe bolt | 25 | 2.5 | 18.0 | ☞ |
| Fuel pressure regulator bolt | 11 | 1.1 | 8.0 | ☞ |
| Fuel tank bolt | 50 | 5.0 | 36.5 | ☞ |
| Fuel filler hose clamp | 2 | 0.2 | 1.5 | ☞ |
| Fuel pump assembly bolt | 11 | 1.1 | 8.0 | ☞ |

**NOTE**

**The specified tightening torque is also described in the following.**
**“Fuel System Components: ”**
**“Fuel Hose Disconnecting and Reconnecting: ”**

**Reference:**

For the tightening torque of fastener not specified in this section, refer to “Fastener Information: in Section 0A”.

www.cargeek.ir

www.CarGeek.ir


# Special Tools and Equipment

## Recommended Service Material

S5JB0A1708001

| Material | SUZUKI recommended product or Specification | | Note |
|---|---|---|---|
| Oil | SUZUKI DI O RING OIL(500CC) | P/No.: 99000–25320 | ☞ |

**NOTE**

**Required service material is also described in the following.**
**“Fuel System Components: ”**

## Special Tool

S5JB0A1708002

| | |
|---|---|
| 09912–58413<br>Fuel pressure gauge set<br>☞<br> 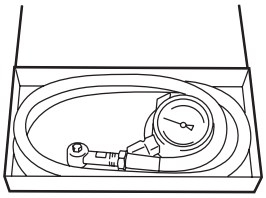 | 09912–58421<br>Checking tool set<br>This kit includes the following items. 1. Tool body and washer, 2. Body plug, 3. Body attachment-1, 4. Holder, 5. Return hose and clamp, 6. Body attachment-2 and washer, 7. Hose attachment-1, 8. Hose attachment-2 ☞<br> 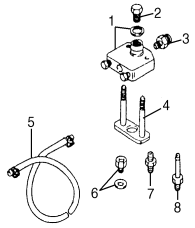 |
| 09912–58442<br>Fuel pressure gauge<br>This tool is included in fuel pressure gauge set (09912-58413). ☞<br> | 09912–58490<br>3-way joint & hose<br>☞<br> 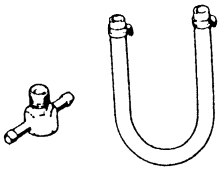 |
| 09917–47011<br>Vacuum pump gauge<br>☞<br> 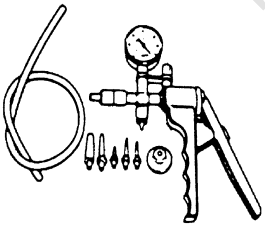 | 09919–47020<br>Quick joint remover<br>☞<br> 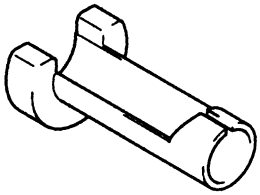 |
| 09930–88530<br>Injector test lead<br>☞<br> 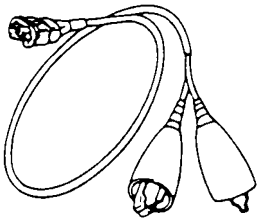 | SUZUKI scan tool<br>—<br>This kit includes following items. 1. Tech 2, 2. PCMCIA card, 3. DLC cable, 4. SAE 16/19 adapter, 5. Cigarette cable, 6. DLC loopback adapter, 7. Battery power cable, 8. RS232 cable, 9. RS232 adapter, 10. RS232 loop back connector, 11. Storage case, 12. Power supply ☞<br> 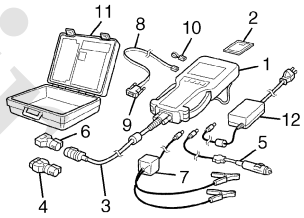 |

www.cargeek.ir

www.CarGeek.ir

# Ignition System

## General Description

### Ignition System Construction

S5JB0A1801001

The ignition system is an electronic (distributor less) ignition system. Especially a direct ignition system is adopted for J20 engine. They consists of the parts as described below.

- **ECM**
  It detects the engine and vehicle conditions through the signals from the sensors, determines the most suitable ignition timing and time for electricity to flow to the primary coil and sends a signal to the ignitor (power unit) in the ignition coil assembly.
- **Ignition coil assembly (including an ignitor and an ignition coil)**
  The ignition coil assembly has a built-in ignitor which turns ON and OFF the current flow to the primary coil according to the signal from ECM. When the current flow to the primary coil is turned OFF, a high voltage is induced in the secondary coil.
- **High-tension cords (for M16 engine) and spark plugs**
- **CMP sensor (Camshaft position sensor) and CKP sensor (Crankshaft position sensor)**
  Using signals from these sensors, ECM identifies the specific cylinder whose piston is in the compression stroke, detects the crank angle and adjusts initial ignition timing automatically.
- **TP sensor, ECT sensor, MAP sensor, MAF sensor, IAT sensor, knock sensor, wheel speed sensor (VSS) and other sensors / switches**

For M16 engine, this ignition system does not have a distributor, it has two ignition coil assemblies (one is for No.1 and No.4 spark plugs and the other is for No.2 and No.3 spark plugs). When an ignition signal is sent from ECM to the ignitor in the ignition coil assembly for No.1 and No.4 spark plugs, a high voltage is induced in the secondary coil and that passes through the high-tension cords and causes No.1 and No.4 spark plugs to spark simultaneously. Likewise, when an ignition signal is sent to the ignitor in the other ignition coil assembly, No.2 and No.3 spark plugs spark simultaneously.
For J20 engine, although ignition system does not have a distributor and high-tension cords but each cylinder has an ignition coil assembly (ignitor and ignition coil) and the secondary voltage which occurred in the ignition coil is sent to the spark plug directly. Also, the signal (s) are sent from the CMP sensor to ECM so as to control each ignition coil independently through the ignitor (in ignition coil assembly).

www.cargeek.ir
www.cargeek.ir

www.CarGeek.ir


# Schematic and Routing Diagram

## Ignition System Wiring Circuit Diagram

S5JB0A1802001

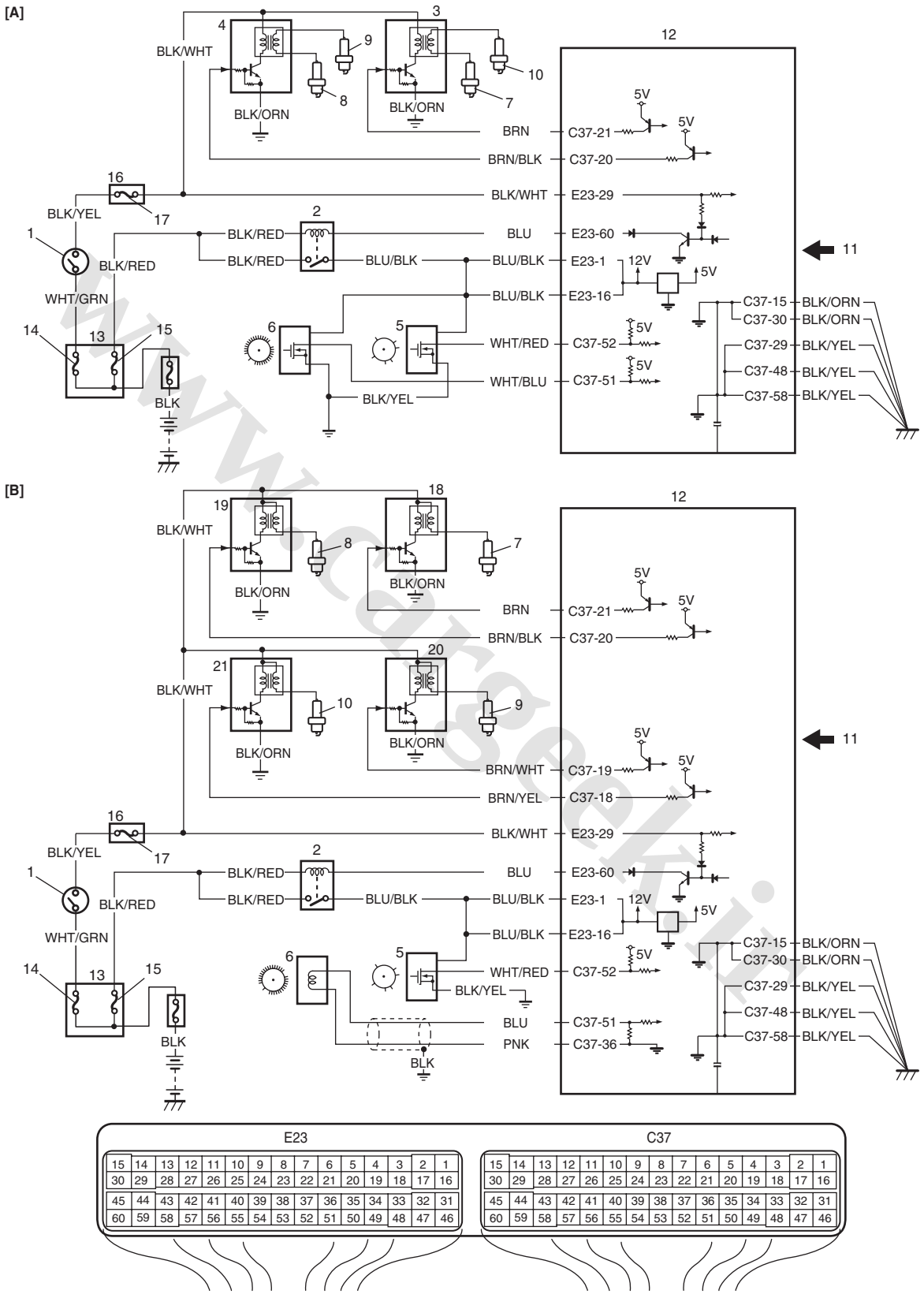


I5JB0A180001-02

| | | |
|---|---|---|
| [A]: For M16 engine | 7. No.1 spark plug | 15. “FI” fuse |
| [B]: For J20 engine | 8. No.2 spark plug | 16. Junction block |
| 1. Ignition switch | 9. No.3 spark plug | 17. “IG COIL” fuse |

www.cargeek.ir

www.CarGeek.ir

| | | |
|---|---|---|
| 2. Main relay | 10. No.4 spark plug | 18. Ignition coil assembly for No.1 |
| 3. Ignition coil assembly for No.1 and No.4 spark plugs | 11. Sensed information (MAP sensor, ECT sensor, MAF and IAT sensor, TP sensor, Knock sensor, wheel speed signal (ABS), Electric load signal, Engine start signal, Torque reduction signal (TCM)) | 19. Ignition coil assembly for No.2 |
| 4. Ignition coil assembly for No.2 and No.3 spark plugs | 12. ECM | 20. Ignition coil assembly for No.3 |
| 5. CMP sensor | 13. Fuse box No.2 | 21. Ignition coil assembly for No.4 |
| 6. CKP sensor | 14. “IGN” fuse | |

# Component Location

## Ignition System Components Location

S5JB0A1803001

**NOTE**

**The figure shows left-hand steering vehicle. For right-hand steering vehicle, parts with (*) are installed at the opposite side.**

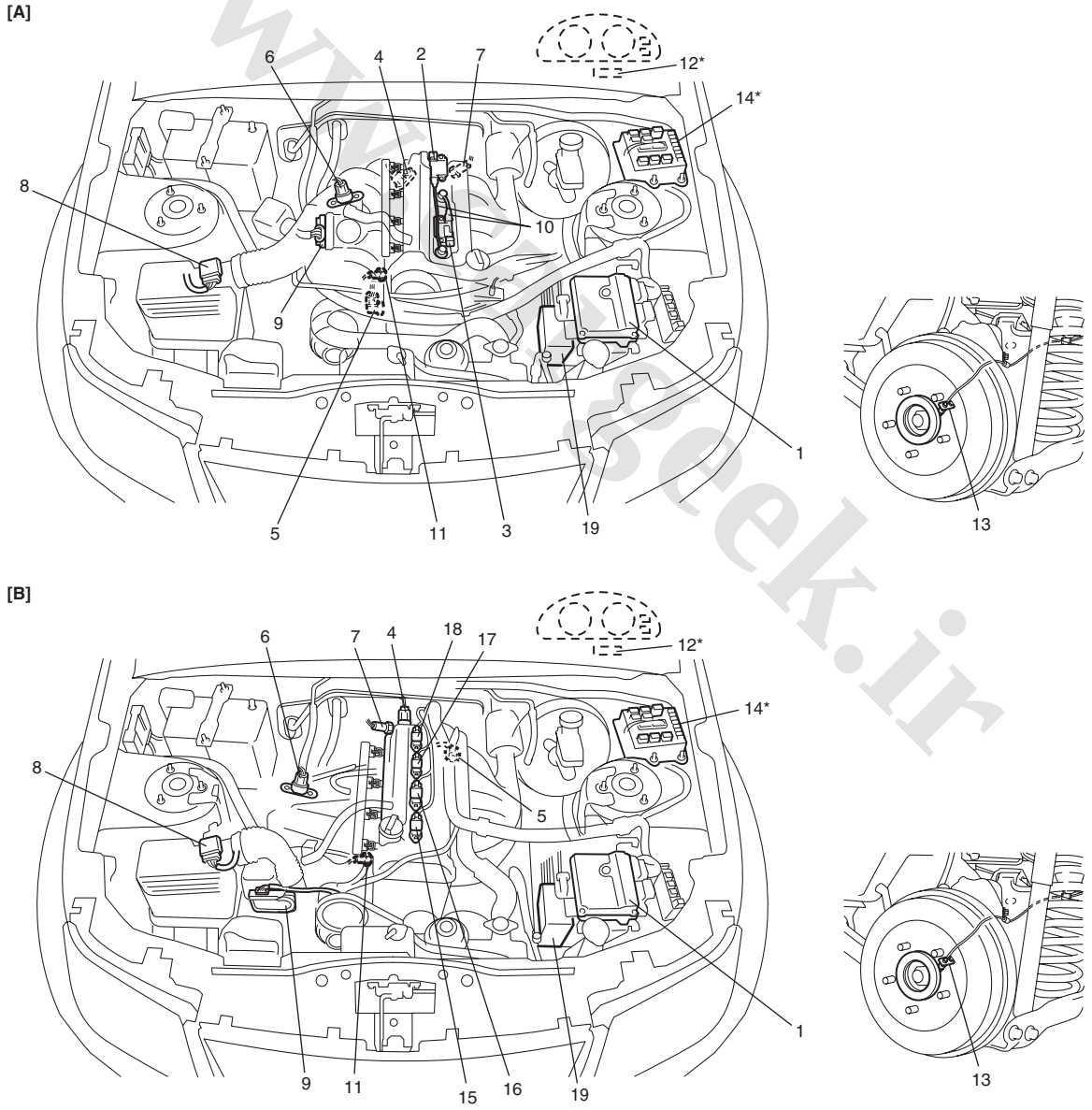


I5JB0A180002-03

www.cargeek.ir

www.CarGeek.ir


| | | |
|---|---|---|
| [A]: For M16 engine | 7. ECT sensor | 15. Ignition coil assembly for No.1 (for J20 engine) |
| [B]: For J20 engine | 8. MAF and IAT sensor | 16. Ignition coil assembly for No.2 (for J20 engine) |
| 1. ECM | 9. Electric throttle body assembly | 17. Ignition coil assembly for No.3 (for J20 engine) |
| 2. Ignition coil assembly for No.1 and No.4 spark plugs (for M16 engine) | 10. High-tension cords (for M16 engine) | 18. Ignition coil assembly for No.4 (for J20 engine) |
| 3. Ignition coil assembly for No.2 and No.3 spark plugs (for M16 engine) | 11. Knock sensor | 19. ABS control module |
| 4. CMP sensor | 12. Data link connector | |
| 5. CKP sensor | 13. Rear wheel speed sensor (RH, LH) (VSS) | |
| 6. MAP sensor | 14. Fuse box No.2 | |

# Diagnostic Information and Procedures

## Ignition System Symptom Diagnosis

S5JB0A1804001

| Condition | Possible cause | Correction / Reference Item |
|---|---|---|
| ***Engine cranks, but will not start or hard to start (No spark)*** | Blown fuse for ignition coil | *Replace.* |
| | Loose connection or disconnection of high-tension cord(s) (for M16 engine) or lead wire | *Connect securely.* |
| | Faulty high-tension cord(s) (for M16 engine) | *Replace.* |
| | Faulty spark plug(s) | *Replace.* |
| | Faulty ignition coil | *Replace ignition coil assembly.* |
| | Faulty CKP sensor or CKP sensor plate | *Clean, tighten or replace.* |
| | Faulty CMP sensor or sensor rotor tooth of camshaft | *Clean, tighten or replace.* |
| | Faulty ECM | *Replace.* |
| ***Poor fuel economy or engine performance*** | Incorrect ignition timing | *Check related sensors and CKP sensor plate.* |
| | Faulty spark plug(s) or high-tension cord(s) (for M16 engine) | *Adjust, clean or replace.* |
| | Faulty ignition coil assembly | *Replace.* |
| | Faulty CKP sensor or CKP sensor plate | *Clean, tighten or replace.* |
| | Faulty CMP sensor or sensor rotor tooth of camshaft | *Clean, tighten or replace.* |
| | Faulty knock sensor | *Replace.* |
| | Faulty ECM | *Replace.* |

## Reference Waveform of Ignition System

S5JB0A1804002

Refer to “Reference waveform No.12 to 16” and “Reference waveform No.20 and 21” under “Inspection of ECM and Its Circuits: in Section 1A” for waveform of Ignition trigger signal.

## Ignition System Check

S5JB0A1804003

| Step | Action | Yes | No |
|---|---|---|---|
| 1 | *Was “Engine and Emission Control System Check” performed?* | Go to Step 2. | Go to “Engine and Emission Control System Check: in Section 1A”. |
| 2 | **Ignition spark test**<br>1) Check all spark plugs for condition and type referring to “Spark Plug Inspection: ”.<br>2) If OK, perform ignition spark test referring to “Ignition Spark Test: ”.<br>*Is spark emitted from all spark plugs?* | Go to Step 12. | Go to Step 3. |

www.cargeek.ir

www.CarGeek.ir

| Step | Action | Yes | No |
|---|---|---|---|
| 3 | **DTC check**<br>1) Perform DTC check referring to “DTC Check: in Section 1A”.<br>*Is DTC stored in ECM?* | Go to applicable DTC diag. flow. | Go to Step 4. |
| 4 | **Electrical connection check**<br>1) Check ignition coil assemblies and high-tension cords (for M16 engine) for electrical connection.<br>*Are they connected securely?* | Go to Step 5 for M16 engine or go to Step 6 for J20 engine. | Connect securely. |
| 5 | **High-tension cords check (for M16 engine)**<br>1) Check high-tension cord for resistance referring to “High-Tension Cord Inspection (For M16 Engine): ”.<br>*Is check result satisfactory?* | Go to Step 6. | Replace high-tension cord(s). |
| 6 | **Ignition coil assembly power supply and ground circuit check**<br>1) Check ignition coil assembly power supply and ground circuits for open and short.<br>*Are circuits in good condition?* | Go to Step 7. | Repair or replace. |
| 7 | **Ignition coil assembly check**<br>1) Check ignition coil for resistance referring to “Ignition Coil Assembly (Including ignitor) Inspection: ”.<br>*Is check result satisfactory?* | Go to Step 8. | Replace ignition coil assembly. |
| 8 | **CKP sensor check**<br>1) Check CKP sensor referring to “Crankshaft Position (CKP) Sensor Inspection: in Section 1C”.<br>*Is check result satisfactory?* | Go to Step 9. | Tighten CKP sensor bolt, replace CKP sensor or CKP sensor plate. |
| 9 | **CMP sensor check**<br>1) Check CMP sensor referring to “Camshaft Position (CMP) Sensor Inspection: in Section 1C”.<br>*Is check result satisfactory?* | Go to Step 10. | Tighten CMP sensor bolt, replace CMP sensor or intake camshaft. |
| 10 | **Ignition trigger signal circuit check**<br>1) Check ignition trigger signal wire for open, short and poor connection.<br>*Is circuit in good condition?* | Go to Step 11. | Repair or replace. |
| 11 | **A known-good ignition coil assembly substitution**<br>1) Substitute a known-good ignition coil assembly and then repeat Step 2.<br>*Is check result of Step 2 satisfactory?* | Go to Step 12. | Substitute a known-good ECM and then repeat Step 2. |
| 12 | **Ignition timing check**<br>1) Check initial ignition timing and ignition timing advance referring to “Ignition Timing Inspection: ”.<br>*Is check result satisfactory?* | System is in good condition. | Go to Step 13. |

www.cargeek.ir

www.CarGeek.ir


| Step | Action | Yes | No |
|---|---|---|---|
| 13 | **Knock sensor check**<br>1) Confirm that knock sensor circuit is in good condition referring to “DTC P0327 / P0328: Knock Sensor Circuit Low / High: in Section 1A”.<br>2) Check oscilloscope waveform of knock sensor signal referring to “Reference waveform No.26” and “Reference waveform No.27” under “Inspection of ECM and Its Circuits: in Section 1A”.<br>*Is check result satisfactory?* | Check CMP sensor, CMP sensor rotor tooth of camshaft, CKP sensor, CKP sensor plate and/or input signals related to this system. | Substitute a known-good knock sensor and recheck. |

## Ignition Spark Test

S5JB0A1804004

1) Remove engine cover.
2) Disconnect all injector couplers from injectors.

**⚠ WARNING**

**Without disconnection of injector couplers, combustible gas may come out from spark plug holes during this test and may get ignited in engine room.**

3) Remove spark plug and check it for condition and type referring to “Spark Plug Inspection: ”.
4) If OK, connect ignition coil coupler to ignition coil assembly and connect spark plug to ignition coil assembly or high-tension cord. Ground spark plug.
5) Crank engine and check if each spark plug sparks.

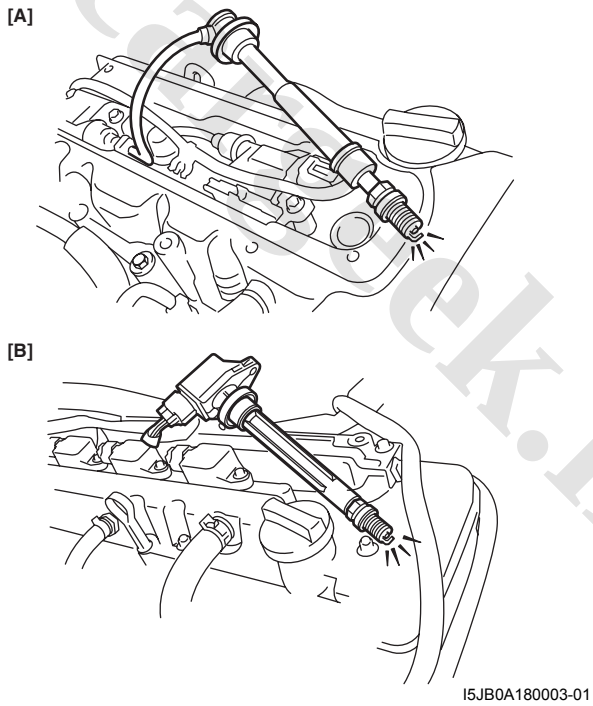


I5JB0A180003-01

| | |
|---|---|
| [A]: | M16 engine model |
| [B]: | J20 engine model |

6) If no spark is emitted, inspect the related parts as described in “Ignition System Symptom Diagnosis: ”.

www.cargeek.ir

www.CarGeek.ir

# Repair Instructions

## High-Tension Cord Removal and Installation (For M16 Engine)

S5JB0A1806001

### Removal

1) Remove engine cover.
2) Disconnect No.1 cylinder (2) and No.3 cylinder (3) high-tension cords from ignition coil assemblies (1) while gripping each cap.

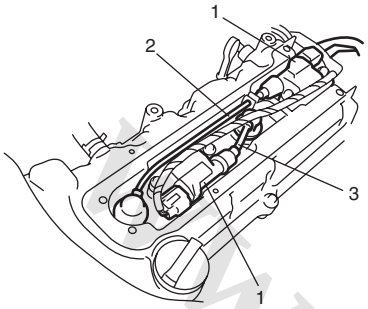


I5JB0A180004-01

3) Pull out high-tension cords from spark plugs while gripping each cap.

**⚠ CAUTION**

- **Removal of high-tension cords together with clamps will be recommended so as not to damage their inside wire (resistive conductor).**
- **For the same reason, pull out each connection by gripping cap portion.**

### Installation

1) Install No.1 cylinder (2) and No.3 cylinder (3) high-tension cords to spark plugs and ignition coil assemblies (1) while gripping each cap.

**⚠ CAUTION**

- **Never attempt to use metal conductor high-tension cords as replacing parts.**
- **Insert each cap portion fully when installing high-tension cords.**

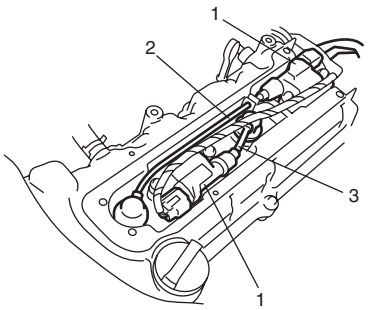


I5JB0A180004-01

## High-Tension Cord Inspection (For M16 Engine)

S5JB0A1806002

Measure resistance of high-tension cord (1) by using ohmmeter.
If resistance exceeds specification, replace high-tension cord(s).

**<u>High-tension cord resistance</u>**
**No.1 cylinder high-tension cord resistance: 1.4 – 4.0 kΩ**
**No.3 cylinder high-tension cord resistance: 0.6 – 2.0 kΩ**

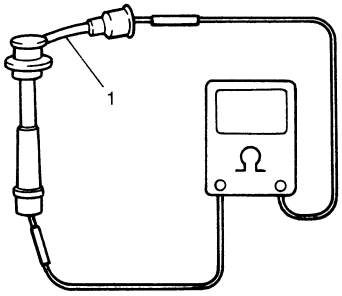


I2RH0B180005-01

## Spark Plug Removal and Installation

S5JB0A1806003

### Removal

1) Remove engine cover.
2) Pull out high-tension cords by gripping their caps (for M16 engine) and then remove ignition coil assemblies referring to “Ignition Coil Assembly (Including ignitor) Removal and Installation: ”.
3) Remove spark plugs.

### Installation

1) Install spark plugs and tighten them to specified torque.

   **Tightening torque**
   **Spark plug: 25 N·m (2.5 kgf-m, 18.0 lb-ft)**

2) Install ignition coil assemblies referring to “Ignition Coil Assembly (Including ignitor) Removal and Installation: ”.
3) Install high-tension cords securely by gripping their caps. (for M16 engine)
4) Install engine cover.

www.cargeek.ir

www.CarGeek.ir


## Spark Plug Inspection

S5JB0A1806004

**⚠ CAUTION**

- **When servicing the iridium / platinum spark plugs (slender center electrode type plugs), do not touch the center electrode to avoid damage to it. The electrode is not strong enough against mechanical force as it is slender and its material is not mechanically tough.**
- **Do not clean or adjust gap for the iridium / platinum spark plugs.**

Inspect spark plug for:

- Electrode wear
- Carbon deposits
- Insulator damage

If any abnormality is found for nickel spark plugs, adjust air gap, clean with spark plug cleaner or replace them with specified new plugs.
For iridium / platinum spark plugs, replace them with new plugs.

**Spark plug air gap**
**"a": 1.0 – 1.1 mm (0.040 – 0.043 in.)**

**Spark plug type**
**NGK: BKR6E-11 (Nickel) for M16 and J20 engine models / IFR6J11 (Iridium) for M16 engine / IFR5J11 (Iridium) for J20 engine**
**DENSO: K20PR-U11 (Nickel) for M16 and J20 engine models**

**NOTE**

**NGK IFR6J11 and IFR5J11 is highly recommended for better engine starting performance under –25 °C (–13 °F).**

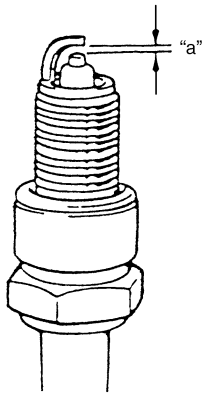


IYSQ01181012-01

## Ignition Coil Assembly (Including ignitor) Removal and Installation

S5JB0A1806005

### Removal

1) Disconnect negative cable at battery.
2) Remove engine cover.
3) Disconnect ignition coil coupler.
4) Disconnect high-tension cord (3) from ignition coil assembly (2). (for M16 engine)
5) Remove ignition coil bolts (1) and then pull out ignition coil assembly.

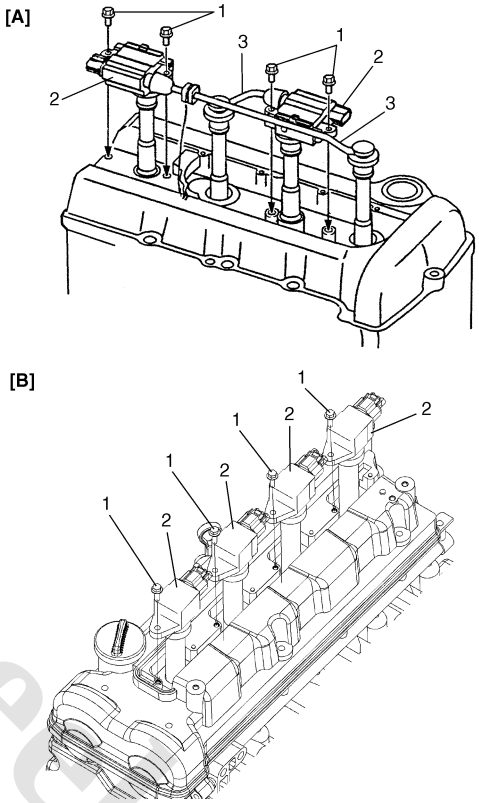


I5JB0A180005-01

| | |
|---|---|
| [A]: | For M16 engine |
| [B]: | For J20 engine |

www.cargeek.ir

www.CarGeek.ir

### Installation

1) Install ignition coil assembly (2).
2) Tighten ignition coil bolts (1) to specified torque, and then connect ignition coil coupler.

   **Tightening torque**
   **Ignition coil bolt for M16 engine (a): 10 N·m (1.0 kgf-m, 7.5 lb-ft)**
   **Ignition coil bolt for J20 engine (b): 6.5 N·m ( 0.65 kgf-m, 5.0 lb-ft)**

3) Install high-tension cord (3) to ignition coil assembly while gripping its cap. (for M16 engine)

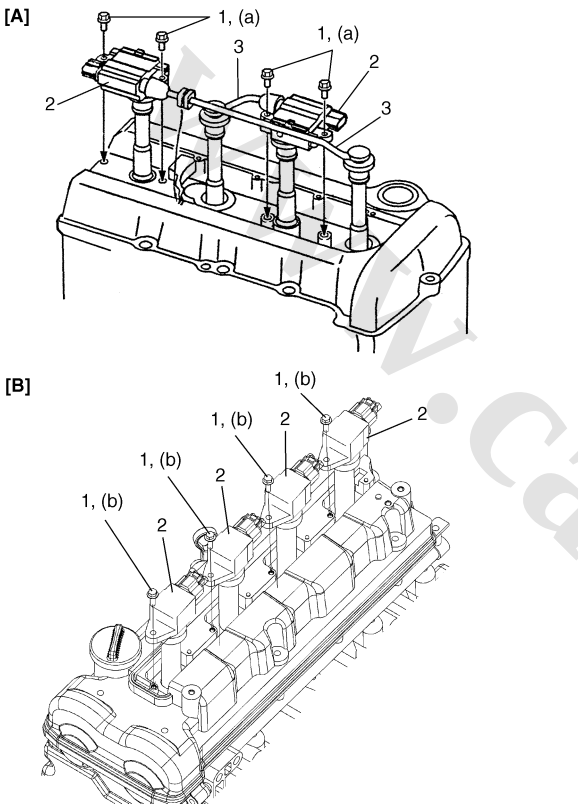


I5JB0A180006-01

| | |
|---|---|
| [A]: | For M16 engine |
| [B]: | For J20 engine |

4) Install engine cover.
5) Connect negative cable to battery.

## Ignition Coil Assembly (Including ignitor) Inspection

S5JB0A1806006

**For M16 Engine**
Measure secondary coil for resistance.
If resistance is out of specification, replace ignition coil assembly.

**Secondary coil resistance**
**7.6 – 10.2 kΩ at 20 °C, 68 °F**

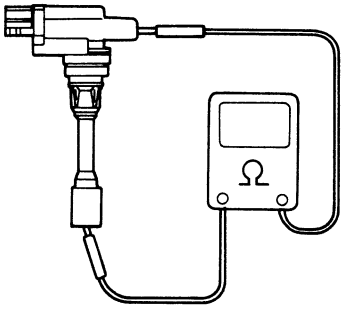


I2RH0B180007-01

**For J20 Engine**
Check ignition coil assembly for the following:

- Damage
- Deterioration
- Terminal for corrosion

If any abnormality is found, replace ignition coil assembly.

## Ignition Timing Inspection

S5JB0A1806007

**NOTE**

- **Ignition timing is not adjustable. If ignition timing is out of specification, check system related parts.**
- **Before starting engine, place transmission gear shift lever in “Neutral” (shift selector lever to “P” range for A/T model), and set parking brake.**

www.cargeek.ir

www.CarGeek.ir


1) Connect scan tool to DLC (1) with ignition switch OFF.

**Special tool**
**(A): SUZUKI scan tool**

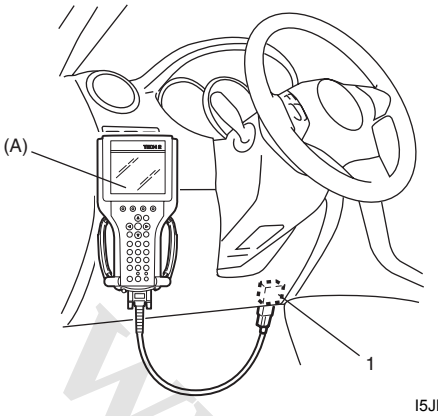

I5JB0A180007-01

2) Start engine and warm it up to normal operating temperature.
3) Make sure that all of electrical loads except ignition are switched off.
4) Check to be sure that idle speed is within specification referring to “Idle Speed and IAC Throttle Valve Opening Inspection: in Section 1A”.
5) Fix ignition timing by using “Fixed Spark” of “Misc Test” mode on scan tool.
6) Set timing light (1) to high-tension cord (for M16 engine) or ignition coil harness (for J20 engine) for No.1 cylinder and check that ignition timing is within specification.

**Initial ignition timing (fixed with SUZUKI scan tool)**
**5° – 15° BTDC (at specified idle speed) (for J20 engine)**
**7° – 17° BTDC (at specified idle speed) (for M16 engine)**

**Ignition order**
**1 – 3 – 4 – 2**

**Special tool**
**(A): 09930–76420**

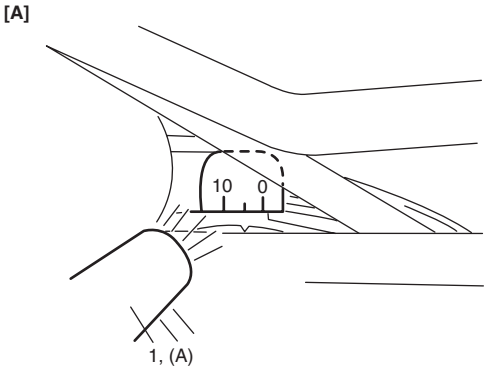


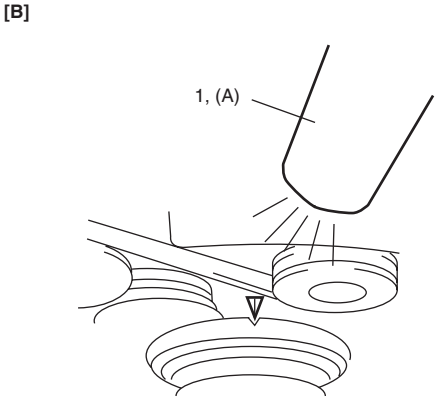

I5JB0A180008-01

| | |
|---|---|
| [A]: | For M16 engine |
| [B]: | For J20 engine |

7) If ignition timing is out of specification, check the followings.
   - CKP sensor
   - CKP sensor plate
   - TP sensor
   - CMP sensor
   - CMP sensor rotor tooth of camshaft
   - Wheel speed sensor (VSS)
   - Knock sensor
   - Timing chain cover installation
8) After checking initial ignition timing, release ignition timing fixation by using scan tool.
9) With engine idling (throttle opening at closed position and vehicle stopped), check that ignition timing is about 7° – 17° BTDC for M16 engine or 5° – 15° BTDC for J20 engine. (Constant variation within a few degrees from 7° – 17° BTDC for M16 engine or 5° – 15° BTDC for J20 engine indicates no abnormality but proves operation of electronic timing control system.) Also, check that increasing engine speed advances ignition timing.
   If the check results are not satisfactory, check CKP sensor and ECM.

www.cargeek.ir

www.CarGeek.ir

# Specifications

## Tightening Torque Specifications

S5JB0A1807001

| Fastening part | Tightening torque | | | Note |
|---|---|---|---|---|
| | N·m | kgf-m | lb-ft | |
| Spark plug | 25 | 2.5 | 18.0 | ☞ |
| Ignition coil bolt for M16 engine | 10 | 1.0 | 7.5 | ☞ |
| Ignition coil bolt for J20 engine | 6.5 | 0.65 | 5.0 | ☞ |

**Reference:**
For the tightening torque of fastener not specified in this section, refer to “Fastener Information:  in Section 0A”.

# Special Tools and Equipment

## Special Tool

S5JB0A1808001

| | | | |
|---|---|---|---|
| 09930–76420<br>Timing-light (dry cell type)<br>☞ | 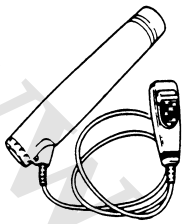 | SUZUKI scan tool<br>—<br>This kit includes following items. 1. Tech 2, 2. PCMCIA card, 3. DLC cable, 4. SAE 16/19 adapter, 5. Cigarette cable, 6. DLC loopback adapter, 7. Battery power cable, 8. RS232 cable, 9. RS232 adapter, 10. RS232 loop back connector, 11. Storage case, 12. Power supply ☞ | 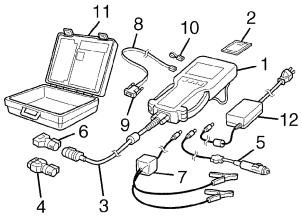 |

www.cargeek.ir

www.CarGeek.ir


# Starting System

## Precautions

### Cranking System Note

S5JB0A1900001

**NOTE**

**Starting motor varies depending on specifications, etc.**
**Therefore, be sure to check model and specification of the vehicle being serviced before replacing parts.**

## General Description

### Cranking Circuit Introduction

S5JB0A1901001

The cranking circuit consists of the battery, starting motor, ignition switch, and related electrical wiring. These components are connected electrically.

### Starting Motor Circuit Description

S5JB0A1901002

- The magnetic switch coils are magnetized when the ignition switch is closed.
- The resulting plunger and pinion drive lever movement causes the pinion to engage the engine flywheel gear and the magnetic switch main contacts to close, and cranking takes place.
- When the engine starts, the pinion over-running clutch protects the armature from excessive speed until the switch is opened, at which time the return spring causes the pinion to disengage.

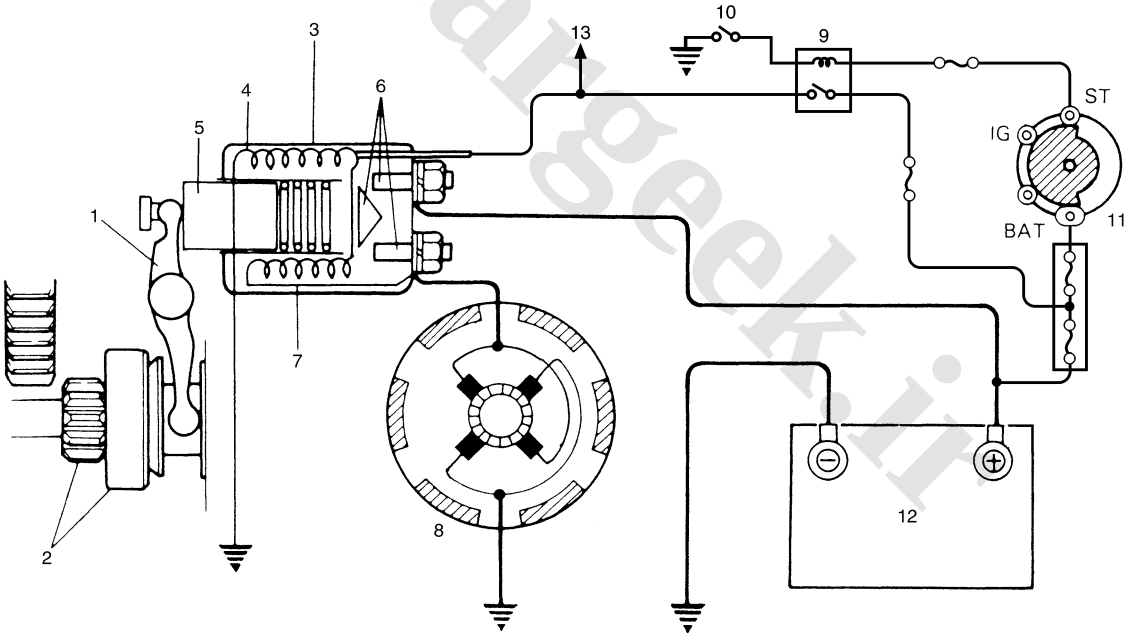


I5JB0A190004-01

| | | |
|---|---|---|
| 1. Pinion drive lever | 6. Magnetic switch contacts | 11. Ignition & Starter switch |
| 2. Pinion & Over-running clutch | 7. Pull-in coil | 12. Battery |
| 3. Magnetic switch | 8. Starting motor | 13. To ECM |
| 4. Hold-in coil | 9. Starting motor control relay | |
| 5. Plunger | 10. A/T: Transmission range switch (shift lever switch) | |

www.cargeek.ir

www.CarGeek.ir

# Diagnostic Information and Procedures

## Cranking System Symptom Diagnosis

S5JB0A1904001

Possible symptoms due to starting system trouble would be as follows:

- Starting motor does not run (or runs slowly)
- Starting motor runs but fails to crank engine
- Abnormal noise is heard

Proper diagnosis must be made to determine exactly where the cause of each trouble lies in battery, wiring harness, (including starting motor switch), starting motor or engine.
Do not remove motor just because starting motor does not run. Check the following items and narrow down scope of possible causes.

1) Condition of trouble
2) Tightness of battery terminals (including ground cable connection on engine side) and starting motor terminals
3) Discharge of battery
4) Mounting of starting motor

| Condition | Possible cause | Correction / Reference Item |
|---|---|---|
| ***Motor not running – No operating sound of magnetic switch*** | Transmission range sensor is not in P or N, or not adjusted (A/T) | *Shift in P or N, or adjust sensor.* |
| | Malfunction of clutch pedal position switch (M/T) | *Adjust or replace.* |
| | Battery run down | *Recharge battery.* |
| | Battery voltage too low due to battery deterioration | *Replace battery.* |
| | Poor contact in battery terminal connection | *Retighten or replace.* |
| | Loose grounding cable connection | *Retighten.* |
| | Fuse set loose or blown off | *Tighten or replace.* |
| | Poor contacting action of ignition switch and magnetic switch | *Replace.* |
| | Lead wire coupler loose in place | *Retighten.* |
| | Open-circuit between ignition switch and magnetic switch | *Repair.* |
| | Open-circuit in pull-in coil | *Replace magnetic switch.* |
| | Brushes are seating poorly or worn down | *Repair or replace.* |
| | Poor sliding or plunger and/or pinion | *Repair.* |
| | Faulty starting motor control relay | *“Main Relay, Fuel Pump Relay, Starting Motor Control Relay and Throttle Actuator Control Relay Inspection: in Section 1C”.* |
| | Faulty ECM and its circuit | *“Inspection of ECM and its Circuits: in Section 1A”.* |
| ***Motor not running – Operating sound of magnetic switch heard*** | Battery run down | *Recharge battery.* |
| | Battery voltage too low due to battery deterioration | *Replace battery.* |
| | Loose battery cable connections | *Retighten.* |
| | Burnt main contact point, or poor contacting action of magnetic switch | *Replace magnetic switch.* |
| | Brushes are seating poorly or worn down | *Repair or replace.* |
| | Weakened brush spring | *Replace.* |
| | Burnt commutator | *Replace armature.* |
| | Layer short-circuit of armature | *Replace.* |
| | Crankshaft rotation obstructed | *Repair.* |

www.cargeek.ir

www.CarGeek.ir


| Condition | Possible cause | Correction / Reference Item |
|---|---|---|
| ***Starting motor running, but too slow (small torque) – Battery and wiring are satisfactory*** | Insufficient contact of magnetic switch main contacts | *Replace magnetic switch.* |
| | Layer short-circuit of armature | *Replace.* |
| | Disconnected, burnt or worn commutator | *Repair commutator or replace armature.* |
| | Worn brushes | *Replace brush.* |
| | Weakened brush springs | *Replace spring.* |
| | Burnt or abnormally worn end bush | *Replace bush.* |
| ***Starting motor running, but not cranking engine*** | Worn pinion tip | *Replace over-running clutch.* |
| | Poor sliding of over-running clutch | *Repair.* |
| | Over-running clutch slipping | *Replace over-running clutch.* |
| | Worn teeth of ring gear | *Replace flywheel (M/T) or drive plate (A/T).* |
| ***Noise*** | Abnormally worn bush | *Replace bush.* |
| | Worn pinion or worn teeth of ring gear | *Replace over-running clutch, flywheel (M/T) or drive plate (A/T).* |
| | Poor sliding of pinion (failure in return movement) | *Repair or replace.* |
| | Worn internal or planetary gear teeth | *Replace.* |
| | Lack of oil in each part | *Lubricate.* |
| ***Starting motor does not stop running*** | Fused contact points of magnetic switch | *Replacemagnetic switch.* |
| | Short-circuit between turns of magnetic switch coil (layer short-circuit) | *Replace magnetic switch.* |
| | Failure of returning action in ignition switch | *Replace.* |

## Starting Motor Performance Test

S5JB0A1904002

**⚠ CAUTION**

**Each test must be performed within 3 – 5 seconds to avoid coil from burning.**

### Pull-In Test

1) Connect battery to magnetic switch as shown.
2) Check that plunger and pinion move outward. If plunger and pinion don't move, replace magnetic switch.

**NOTE**

**Before testing, disconnect lead wire from terminal "M".**

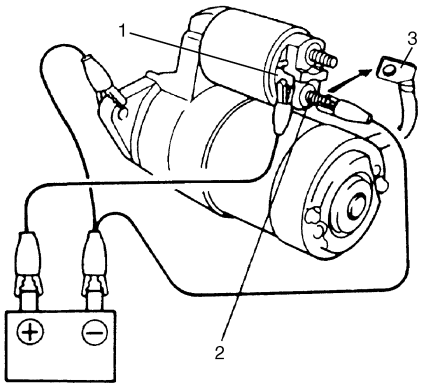


IYSQ01190003-01

| | | |
|---|---|---|
| 1. Terminal "S" | 2. Terminal "M" | 3. Lead wire (switch to motor) |

www.cargeek.ir

www.CarGeek.ir

**Hold-In Test**

1) While connected as above with plunger out, disconnect negative lead (2) from terminal “M” (1).
2) Check that plunger and pinion remain out. If plunger and pinion return inward, replace magnetic switch.

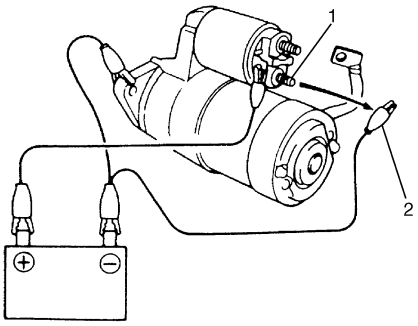


IYSQ01190004-01

**Plunger and Pinion Return Test**

1) Disconnect negative lead (1) from switch body (2).
2) Check that plunger and pinion return inward. If plunger and pinion don’t return, replace the magnetic switch.

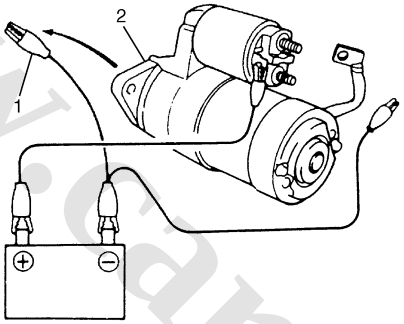


IYSQ01190005-01

**No-Load Performance Test**

1) Connect battery and ammeter to starter as shown.
2) Check that starter rotates smoothly and steadily with pinion moving out. Check that ammeter indicates specified current.

**Specified current (no-load performance test)**
**90 A MAX. at 11 V**

**NOTE**

**Use wires as thick as possible and tighten each terminal fully.**

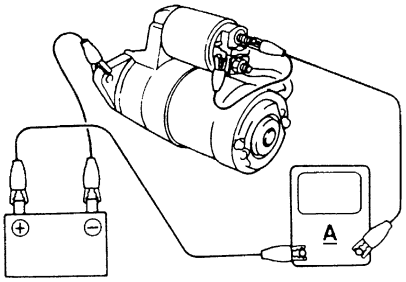


IYSQ01190006-01

www.cargeek.ir

www.CarGeek.ir


# Repair Instructions

## Starting Motor Dismounting and Remounting

S5JB0A1906001

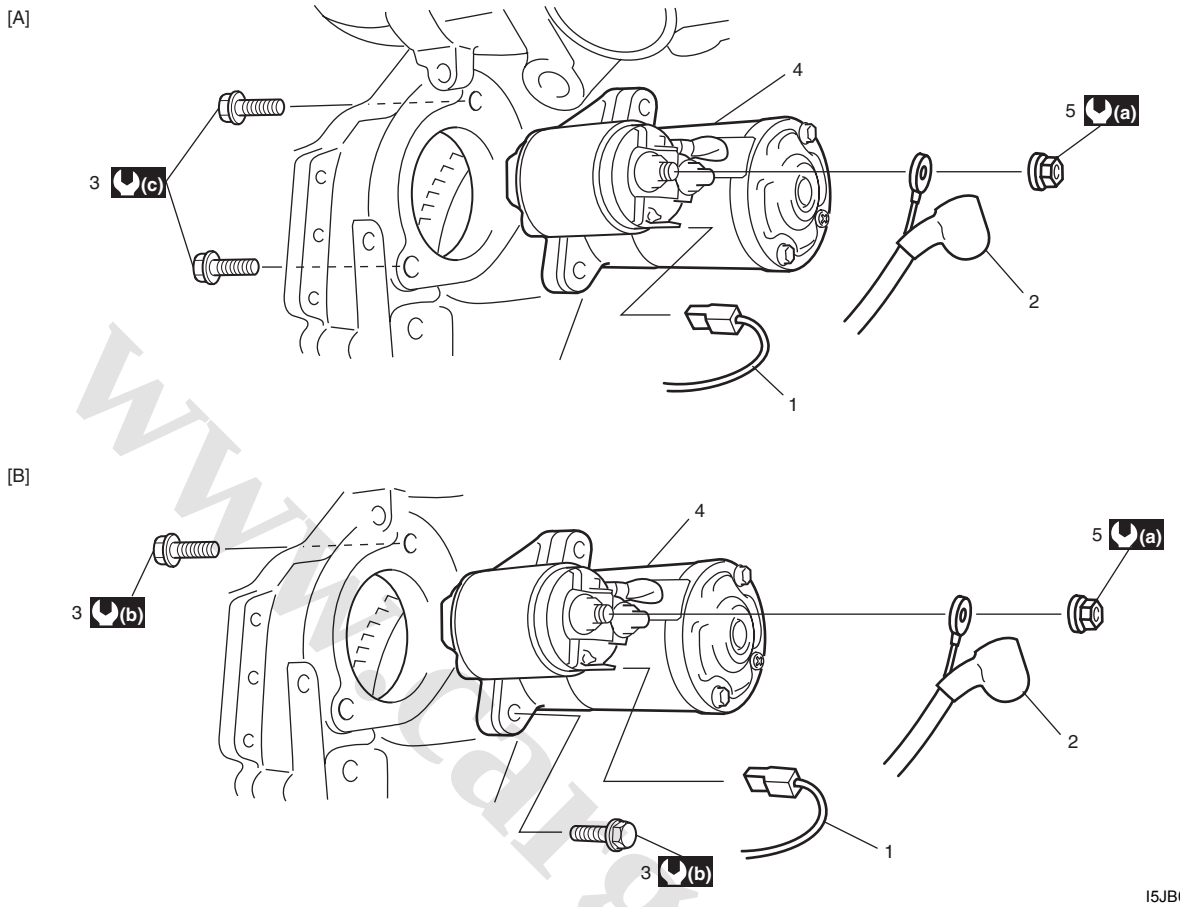


I5JB0A190001-02

| | | |
|---|---|---|
| [A]: For M16 Engine | (a) : 11 N·m (1.1 kgf-m, 8.0 lb-ft) | (c) : 55 N·m (5.5 kgf-m, 40.0 lb-ft) |
| [B]: For J20 Engine | (b) : 25 N·m (2.5 kgf-m, 18.5 lb-ft) | |

### Dismounting

1) Disconnect negative (–) battery lead at battery.
2) Hoist vehicle
3) Disconnect magnetic switch lead wire (1) and battery cable (2) from starting motor terminals.
4) Remove starting motor mount bolts (3).
5) Remove starting motor (4).

### Remounting

Reverse the dismounting procedure noting the following.

- Tighten battery cable nut (5) to specified torque.

**Tightening torque**
**Starting motor battery cable nut (a): 11 N·m (1.1 kgf-m, 8.0 lb-ft)**

www.cargeek.ir

www.CarGeek.ir

## Starting Motor Components

S5JB0A1906005

The starting motor consists of parts shown in below and has permanent magnets mounted in starting motor yoke (frame).
The magnetic switch assembly and parts in the starting motor are enclosed in the housings so that they will be protected against possible dirt and water splash.

**NOTE**

**Spare parts have been lubricated.**

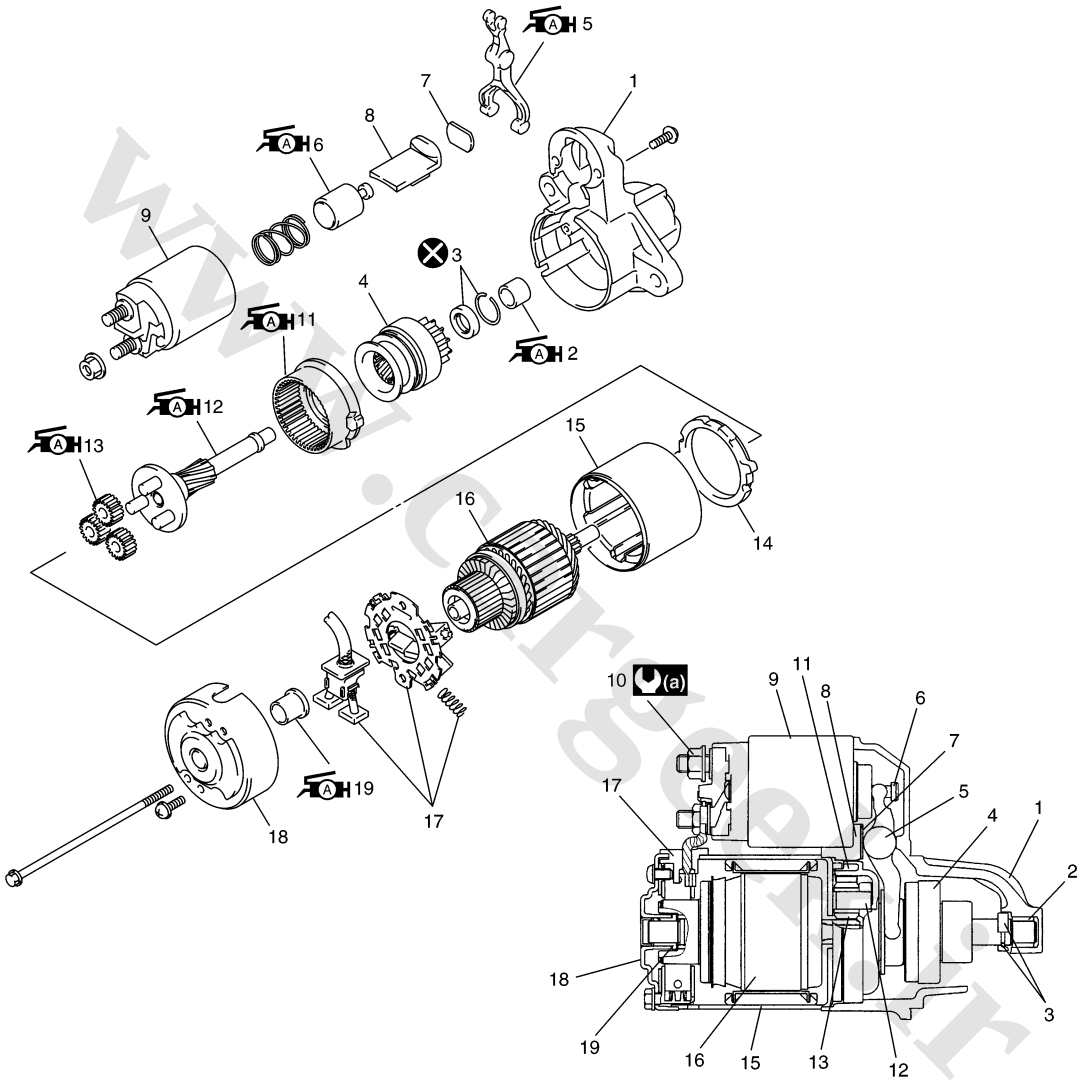


I5JB0A190002-01

| | | | |
|---|---|---|---|
| 1. Front housing | 7. Plate | 13. Planetary gear | 19. Rear bush |
| 2. Bush | 8. Seal rubber | 14. Packing | (a) : 11 N·m (1.1 kgf-m, 8.0 lb-ft) |
| 3. Pinion stop ring | 9. Magnetic switch | 15. Yoke | : Do not reuse. |
| 4. Over-running clutch | 10. Starting motor battery cable nut | 16. Armature | : Apply grease 99000-25010 to sliding surface of each part. |
| 5. Lever | 11. Internal gear | 17. Brush assembly | |
| 6. Plunger | 12. Planetary carrier shaft | 18. Rear bracket | |

www.cargeek.ir

www.CarGeek.ir


## Starting Motor Inspection

S5JB0A1906004

### Plunger

Inspect plunger for wear. Replace if necessary.

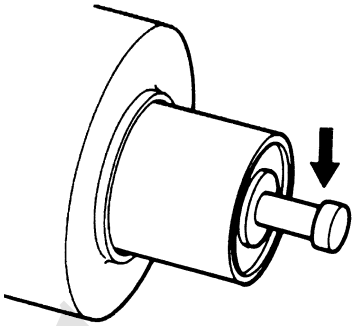

IYSQ01190027-01

### Magnetic Switch

Push in plunger and release it. The plunger should return quickly to its original position. Replace if necessary.

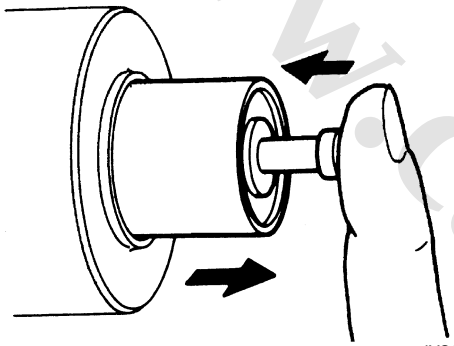

IYSQ01190028-01

### Pull-In coil open circuit test

Check for continuity across magnetic switch “S” terminal and “M” terminal. If no continuity exists, coil is open and should be replaced.

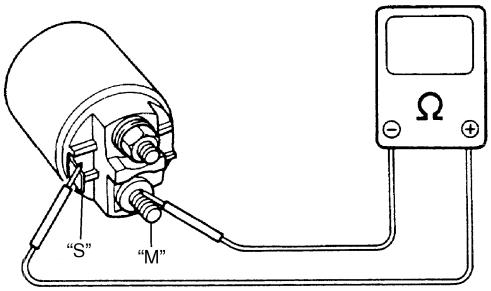


IYSQ01190029-01

### Hold-In coil open circuit test

Check for continuity across magnetic switch “S” terminal and coil case. If no continuity exists, coil is open and should be replaced.

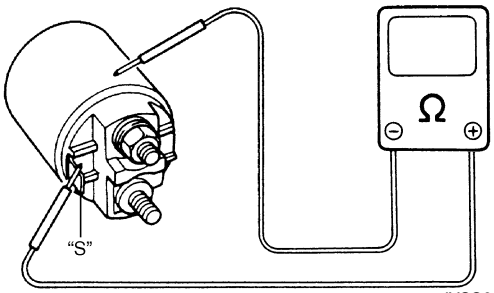


IYSQ01190030-01

### Rear Bracket Bush

Inspect bush for wear or damage. Replace if necessary.

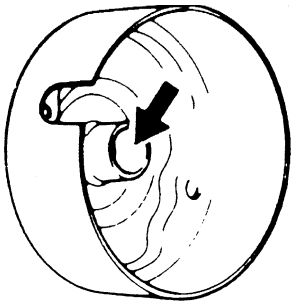

IYSQ01190031-01

### Brush

- Check brushes for wear.
  Measure length of brushes and if below the limit, replace the brush.

  **<u>Brush length</u>**
  **Standard: 12.3 mm (0.48 in.)**
  **Limit: 5.5 mm (0.22 in.)**

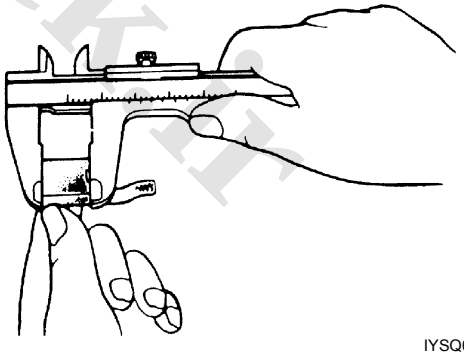

IYSQ01190032-01

- Install brushes to each brush holder and check for smooth movement.

### Brush Spring

Inspect brush springs for wear, damage or other abnormal conditions. Replace if necessary.

**<u>Brush spring tension</u>**
**Standard: 1.8 kg (3.97 lb)**
**Limit: 0.3 kg (0.67 lb)**

www.cargeek.ir

www.CarGeek.ir

### Brush Holder

- Check movement of brush in brush holder. If brush movement within brush holder is sluggish, check brush holder for distortion and sliding faces for contamination. Clean or correct as necessary.
- Check for continuity across insulated brush (positive side) and grounded brush (negative side). If continuity exists, brush holder is grounded due to defective insulation and should be replaced.

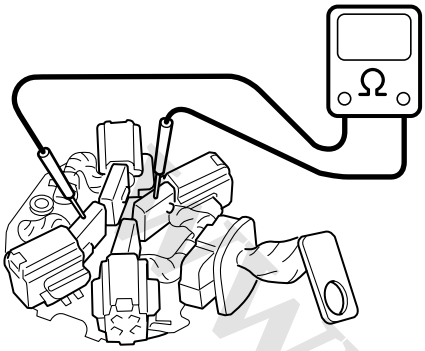


I4RS0A190004-01

### Armature

- Inspect commutator for dirt or burn. Correct with sandpaper or lathe, if necessary.

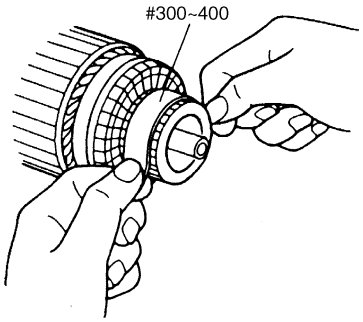


IYSQ01190034-01

- Check commutator for uneven wear with armature (1) supported on V-blocks (2). If deflection of dial gauge (4) pointer exceeds limit, repair or replace.

**NOTE**

**The following specification presupposes that armature is free from bend. Bent armature must be replaced.**

**Commutator out of round**
**Standard: 0.05 mm (0.002 in.) or less**
**Limit: 0.4 mm (0.016 in.)**

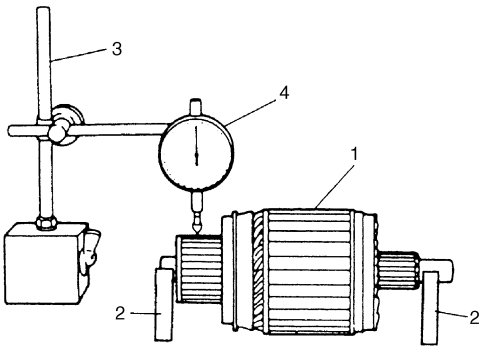


IYSQ01190035-01

| | |
|---|---|
| 3. Magnetic stand | |

- Inspect commutator for wear. If diameter is below limit, replace armature.

**Commutator outside diameter**
**Standard: 29.4 mm (1.16 in.)**
**Limit: 28.8 mm (1.13 in.)**

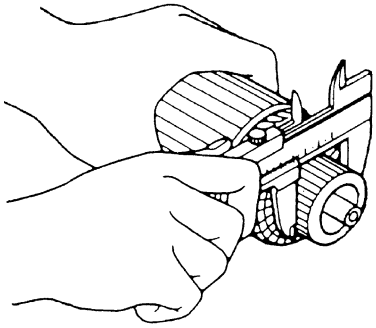

IYSQ01190036-01

- Inspect commutator for insulator depth. Correct or replace if below limit.

**Commutator insulator depth "a"**
**Standard: 0.4 – 0.6 mm (0.016 – 0.024 in.)**
**Limit: 0.2 mm (0.008 in.)**

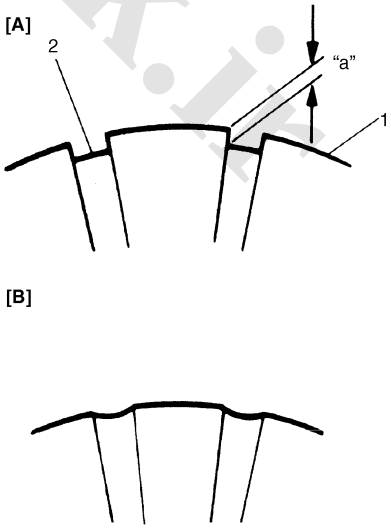


I5JB0A190003-01

| | |
|---|---|
| [A]: Correct | 1. Commutator segment |
| [B]: Incorrect | 2. Insulator |

www.cargeek.ir

www.CarGeek.ir


**Ground test**

Check the commutator and armature core. If there is continuity, armature is grounded and must be replaced.

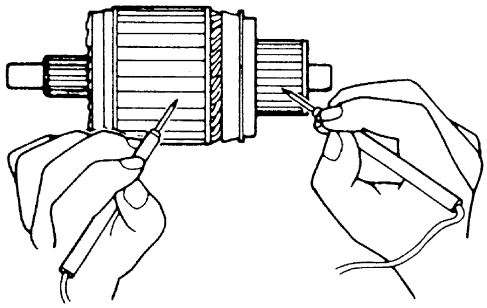

IYSQ01190038-01

**Open circuit test**

Check for continuity between segments. If there is no continuity at any test point, there is an open circuit and the armature must be replaced.

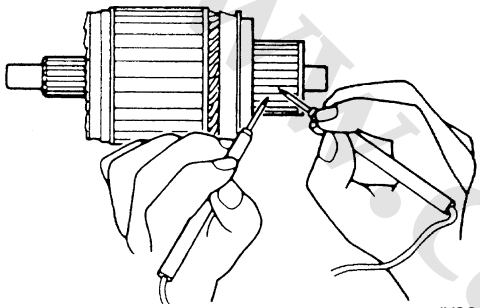

IYSQ01190039-01

**Gears**

Inspect internal gear and the planetary gears for wear, damage or other abnormal conditions. Replace if necessary.

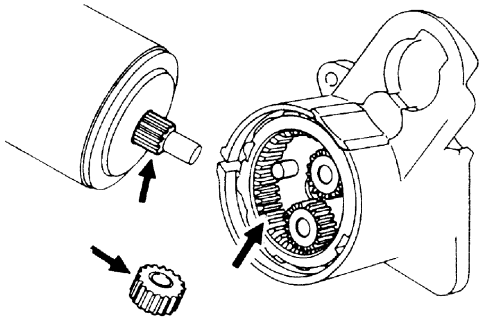

IYSQ01190040-01

**Pinion and Over-Running Clutch**

- Inspect pinion for wear, damage or other abnormal conditions. Check that clutch locks up when turned in direction of drive and rotates smoothly in reverse direction. Replace if necessary.

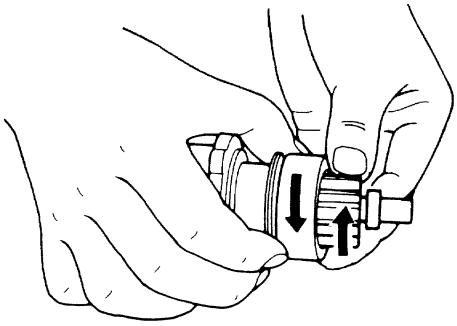

IYSQ01190041-01

- Inspect spline teeth for wear or damage. Replace if necessary. Inspect pinion for smooth movement.

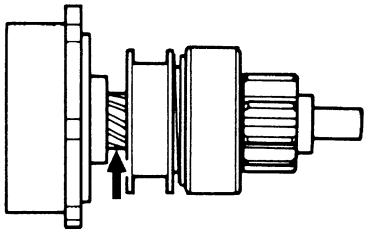

IYSQ01190042-01

**Front Housing Bush**

Inspect bush for wear or damage. Replace if necessary.

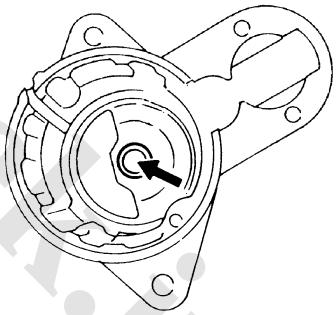

IYSQ01190043-01

www.cargeek.ir

www.CarGeek.ir

# Specifications

## Starting Motor Specifications

S5JB0A1907001

### 1.2 kW Type [1.4 kW Type]

| | | | | |
|---|---|---|---|---|
| Voltage | | | 12 volts | |
| Output | | | 1.2 kW [1.4 kW] | |
| Rating | | | 30 seconds | |
| Direction of rotation | | | Clockwise as viewed from pinion side | |
| Brush length | | | Standard: 12.3 mm (0.48 in.) | Limit: 5.5 mm (0.22 in.) |
| Number of pinion teeth | | | 8 | |
| Performance | | Condition | Guarantee | |
| Around at 20 °C (68 °F) | No load characteristic | 11.0 V | 90 A maximum<br>2370 r/min minimum [2000 r/min minimum] | |
| | Load characteristic | 7.5 V<br>300 A | 10.65 N·m (1.065 kgf-m, 7.70 lb-ft) minimum<br>[11.0 N·m (1.1 kgf-m, 7.95 lb-ft) minimum]<br>840 r/min minimum | |
| | Locked characteristic | 4.0 V<br>[3.0 V] | 780 A maximum<br>[860 A maximum]<br>20 N·m (2.0 kgf-m, 14.5 lb-ft) minimum | |
| | Magnetic switch operating voltage | | 8 volts maximum | |

## Tightening Torque Specifications

S5JB0A1907002

| Fastening part | Tightening torque | | | Note |
|---|---|---|---|---|
| | N·m | kgf-m | lb-ft | |
| Starting motor battery cable nut | 11 | 1.1 | 8.0 | ☞ |

**NOTE**

**The specified tightening torque is also described in the following.**
**“Starting Motor Dismounting and Remounting: ”**
**“Starting Motor Components: ”**

**Reference:**
For the tightening torque of fastener not specified in this section, refer to “Fastener Information:  in Section 0A”.

# Special Tools and Equipment

## Recommended Service Material

S5JB0A1908001

**NOTE**

**Required service material is also described in the following.**
**“Starting Motor Components: ”**

www.cargeek.ir

www.CarGeek.ir


# Charging System

## General Description

### Battery Description

S5JB0A1A01001

The battery has three major functions in the electrical system.

- It is a source of electrical energy for cranking the engine.
- It acts as a voltage stabilizer for the electrical system.
- It can, for a limited time, provide energy when the electrical load exceeds the output of the generator.

**Carrier and Hold-Down**

The battery carrier should be in good condition so that it will support the battery securely and keep it level.
Before installing the battery, the battery carrier and hold-down clamp should be clean and free from corrosion and make certain there are no parts in carrier.
To prevent the battery from shaking in its carrier, the hold-down bolts should be tight enough but not over-tightened.

**Electrolyte Freezing**

The freezing point of electrolyte depends on its specific gravity. Since freezing may ruin a battery, it should be protected against freezing by keeping it in a fully charged condition. If a battery is frozen accidentally, it should not be charged until it is warmed.

**Sulfation**

If the battery is allowed to stand for a long period in discharged condition, the lead sulfate becomes converted into a hard, crystalline substance, which will not easily turn back to the active material again during the subsequent recharging. “Sulfation” means the result as well as the process of that reaction.
Such a battery can be revived by very slow charging and may be restored to usable condition but its capacity is lower than before.

**Built-in Indicator (if equipped)**

The battery has a built-in temperature compensated indicator (1) in the top of the battery. This indicator is to be used with the following diagnostic procedure.
When checking the indicator, make sure that the battery has a clean top. A light may be needed in some poorly-lit areas.
Three types of indication available under normal operation are as follows.

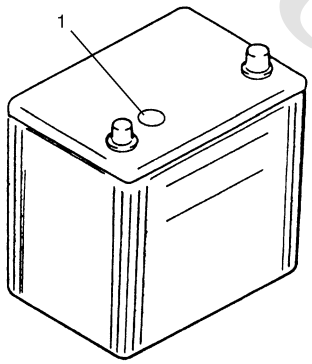


IYSQ011A0001-01

www.cargeek.ir

www.CarGeek.ir

- **Green Dot:**
  Battery is sufficiently charged for testing.
- **Dark:**
  Battery must be charged before testing.
  If there is a cranking complaint, battery should be tested as described in “Battery Inspection: ”.
  Charging and electrical systems should also be checked at this time.
- **Clear or Light Yellow:**
  This means that fluid level is below the bottom of hydrometer. Its possible cause is excessive or prolonged charging, a broken case, excessive tipping or normal battery deterioration.
  When the battery is found in such condition, it is possible that high charging voltage is caused by the faulty charging system and therefore, charging and electrical systems need to be checked. If there is a trouble in cranking and its cause lies in the battery, it should be replaced.

| Diagnosis | OK | Charging necessary | Low Level Electrolyte Replace Battery |
|---|---|---|---|
| Indicator | IYSQ011A0002-01<br>Green dot | IYSQ011A0065-01<br>Dark | IYSQ011A0066-01<br>Clear |
| Gravity Ball | IYSQ011A0067-01 | IYSQ011A0068-01 | IYSQ011A0069-01 |

## Generator Description

S5JB0A1A01002

The basic charging system is the IC integral regulator charging system. The internal components are connected electrically as shown below.

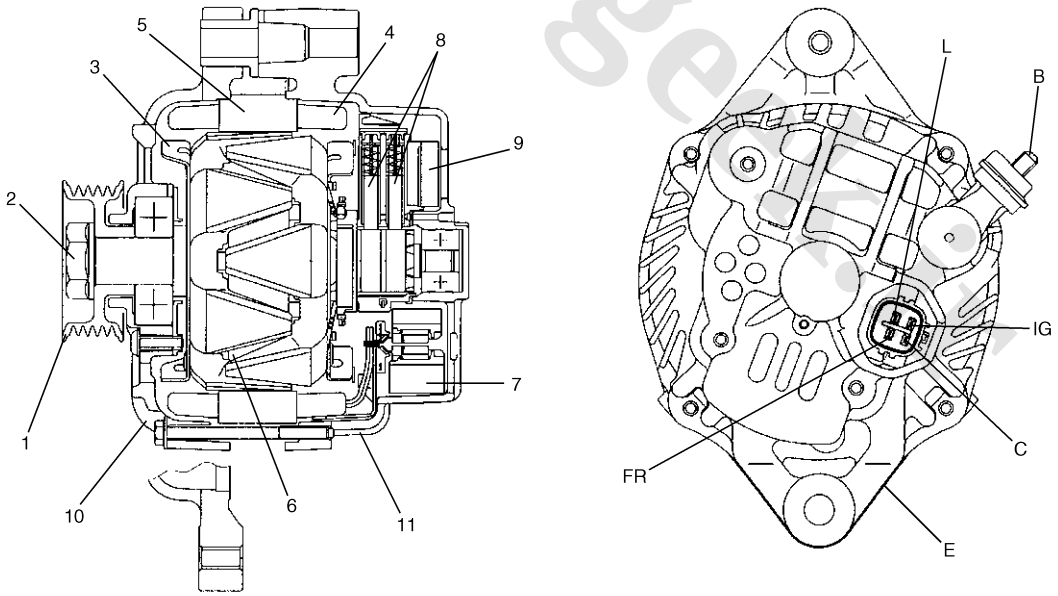


I5JB0A1A0004-01

| | | | |
|---|---|---|---|
| 1. Pulley | 6. Field coil | 11. Rear housing | IG: Ignition terminal |
| 2. Pulley nut | 7. Rectifier | B: Generator output (Battery terminal) | L: Lamp terminal |
| 3. Rotor fan | 8. Brush | C: Generator cut | |
| 4. Stator coil | 9. Regulator | E: Ground | |
| 5. Stator core | 10. Front housing | FR: Field duty monitor | |

www.cargeek.ir

www.CarGeek.ir


**Charging System Circuit**

The generator features a solid state regulator that is mounted inside the generator. All regulator components are enclosed into a solid mold, and this unit along with the brush holder assembly is attached to the rear housing. The regulator voltage is being controlled by ECM under some conditions while driving. Refer to “Generator Control System Description: in Section 1A”.

The generator rotor bearings contain enough grease to eliminate the need for periodic lubrication.

Two brushes carry current through the two slip rings to the field coil mounted on the rotor, and under normal conditions will provide long period of attention-free service.

The stator windings are assembled inside a laminated core that forms part of the generator frame.

A rectifier bridge connected to the stator windings contains diodes, and electrically changes the stator AC. voltages to a D.C. voltage which appears at the generator output terminal.

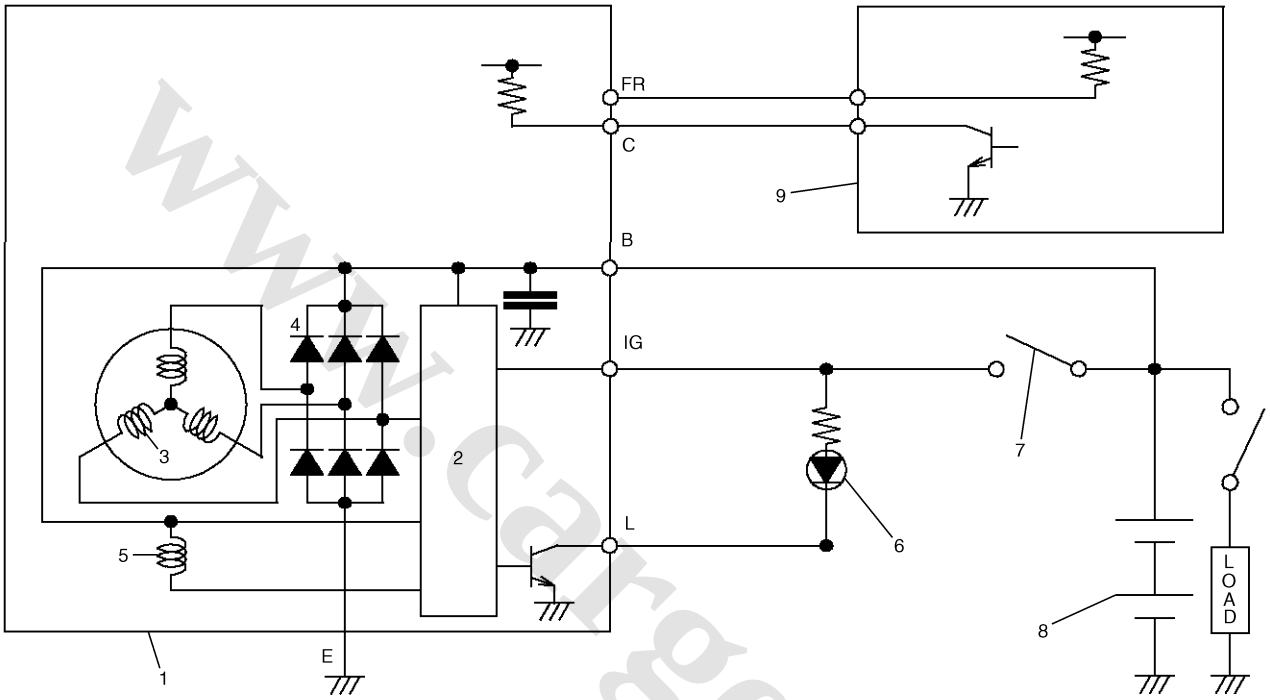


I5JB0A1A0005-01

| | | |
|---|---|---|
| 1. Generator with regulator assembly | 4. Diode | 7. Main switch |
| 2. I.C. regulator | 5. Field coil (rotor coil) | 8. Battery |
| 3. Stator coil | 6. Charge indicator light | 9. ECM |

# Diagnostic Information and Procedures

## Battery Inspection

S5JB0A1A04004

**Common Causes of Failure**

A battery is not designed to last indefinitely; however, with proper care, it will provide many years of service. If the battery performs satisfactorily during test but fails to operate properly for no apparent reason, the following are some factors that may point to the cause of trouble:

- Accessories left on overnight or for an extended period without the generator operating.
- Slow average driving speeds for short periods.
- Electrical load exceeding generator output particularly with addition of aftermarket equipment.
- Defects in charging system such as high resistance, slipping drive belt, loose generator output terminal, faulty generator or voltage regulator. Refer to “Generator Symptom Diagnosis: ”.
- Battery abuse, including failure to keep battery cable terminals clean and tight or loose battery hold down.
- Mechanical problems in electrical system such as shorted or pinched wires.

**Visual inspection**

Check for obvious damage, such as cracked or broken case or cover, that could permit loss of electrolyte.

If obvious damage is noted, replace battery. Determine cause of damage and correct as needed.

www.cargeek.ir

www.CarGeek.ir

## Generator Symptom Diagnosis

S5JB0A1A04001

A charging circuit wiring diagram for generator connection is shown in “Generator Description: ”. To avoid damage, always follow these precautions:

**⚠ CAUTION**

- **Do not mistake polarities of “IG” terminal and “L” terminal.**
- **Do not create a short circuit between “IG” and “L” terminals. Always connect these terminals through a lamp.**
- **Do not connect any load between “L” and “E” terminals.**
- **When connecting charger or booster battery to vehicle battery, refer to “Jump Starting in Case of Emergency: ”.**

Trouble in charging system will show up as one or more of the following conditions:

1) Faulty charge indicator light operation.
2) An undercharged battery as evidenced by slow cranking or indicator clear with dark on light yellow dot.
3) An overcharged battery as evidenced by excessive spewing of electrolyte from vents.

| Condition | Possible cause | Correction / Reference Item |
|---|---|---|
| ***Noisy generator*** | Loose drive belt | *Adjust or replace drive belt.* |
| | Loose drive belt pulley | *Check generator.* |
| | Loose mounting bolts | *Check mounting condition.* |
| | Worn or dirty bearings | *Check generator.* |
| | Defective diode or stator | *Check generator.* |
| ***Charge indicator light does not light with ignition ON and engine off*** | Fuse blown | *Check fuse.* |
| | Indicator lamp (LED) faulty | *Check BCM, combination meter and/or CAN communication line.* |
| | Wiring connection loose | *Tighten loose connection.* |
| | IC regulator faulty | *Check generator.* |
| | Poor contact between brush and slip ring | *Repair or replace.* |
| ***Charge indicator light does not go out with engine running*** | Drive belt loose or worn | *Adjust or replace drive belt.* |
| | IC regulator or generator faulty | *Check charging system.* |
| ***Battery requires frequent recharging*** | Wiring faulty | *Repair wiring.* |

## Generator Test (Undercharged Battery Check)

S5JB0A1A04002

This condition, as evidenced by slow cranking or indicator clear with dark or light yellow dot can be caused by one or more of the following conditions even though indicator lamp may be operating normal.
The following procedure also applies to cars with voltmeter and ammeter.

1) Make sure that undercharged condition has not been caused by accessories left on for extended period of time.
2) Check drive belt for proper tension.
3) If battery defect is suspected, refer to “Battery Description: ”.
4) Inspect wiring for defects. Check all connections for tightness and cleanliness, battery cable connections at battery, starting motor, ignition ground cable and no “C” terminal circuit at ground.
5) Connect switch (6), load (5), battery (4), voltmeter (3) and ammeter (2) to generator (1) as shown in figure.

**Voltmeter:** Set between generator “B” terminal and ground.
**Ammeter:** Set between generator “B” terminal and battery (+) terminal.

**NOTE**

**Use fully charged battery.**

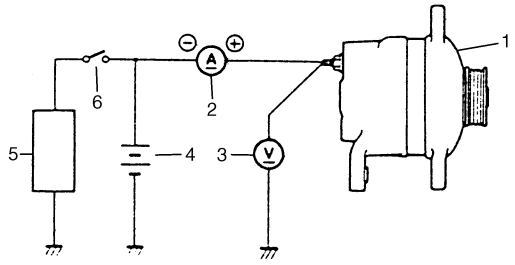


IYSQ011A0007-01

6) Measure current and voltage.

www.cargeek.ir

www.CarGeek.ir


### No-Load Check

1) Run engine from idling up to 2000 rpm and read meters.

**NOTE**

**Turn off switches of all accessories (wiper, heater etc.).**

**Specification for undercharged battery (No-load check)**
**Current: 10 A**
**Voltage: 14.2 – 14.8 V (at 20 °C, 68 °F)**

**NOTE**

**Consideration should be taken that voltage will differ somewhat with regulator case temperature as shown in figure.**

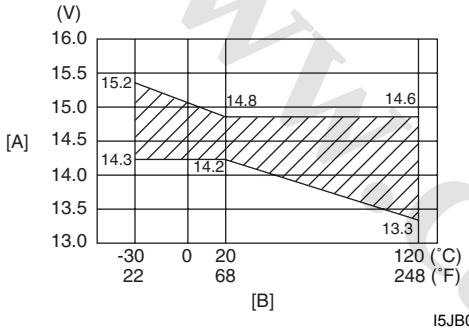


I5JB0A1A0006-02

| | |
|---|---|
| [A]: | Regulated voltage (V) |
| [B]: | Heat sink temperature (°C) |

2) Using service wire, ground “C” terminal (1) of generator.

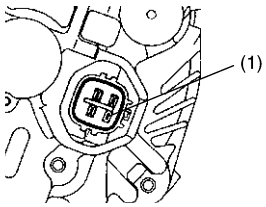


I5JB0A1A0011-01

3) Measure voltage between “B” terminal of generator and body ground.

**Voltage: 12.5 – 13.1 V (at 20 °C, 68 °F)**

- **If voltage is higher than standard value**
  If voltage is higher than standard value, check ground of brushes.
  If brushes are not grounded, replace IC regulator.
  If voltage is lower than standard value, proceed to the following check.

### Load Check

1) Run engine at 2000 rpm and turn on head light and heater motor.
2) Measure current and if it is less than 30 A repair or replace generator.

## Generator Test (Overcharged Battery Check)

S5JB0A1A04003

1) To determine battery condition, refer to “Battery Description: ”.
2) If obvious overcharge condition exists as evidenced by excessive spewing of electrolyte, measure generator “B” terminal voltage at engine 2000 rpm.

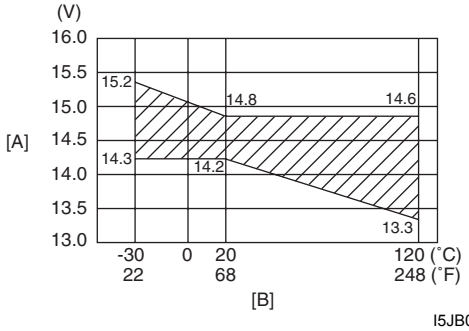


I5JB0A1A0006-02

| | |
|---|---|
| [A]: | Regulated voltage (V) |
| [B]: | Heat sink temperature (°C) |

3) If measured voltage is higher than upper limit value, proceed to disassemble generator.
4) Check ground of brushes. If brushes are not grounded, replace IC regulator. Then check field coil for grounds and shorts, referring to “Generator Inspection: ”.

www.cargeek.ir

www.CarGeek.ir

# Repair Instructions

## Jump Starting in Case of Emergency

S5JB0A1A06004

### With Auxiliary (Booster) Battery

**⚠ CAUTION**

**If vehicle is manual transmission model and has a catalytic converter, do not push or tow it to start. Damage to its emission system and/or to other parts may result.**

Both booster and discharged battery should be treated carefully when using jumper cables. Follow the procedure outlined as follows, being careful not to cause sparks.

**⚠ WARNING**

- **Departure from these conditions or procedure described as follows could result in:**
  - **a. Serious personal injury (particularly to eyes) or property damage from such causes as battery explosion, battery acid, or electrical burns.**
  - **b. Damage to electronic components of either vehicle.**
- **Never expose battery to open flame or electric spark. Batteries generate gas which is flammable and explosive.**
- **Remove rings, watches, and other jewelry. Wear approved eye protection.**
- **Do not allow battery fluid to contact eyes, skin, fabrics, or painted surface as fluid is a corrosive acid. Flush any contacted area with water immediately and thoroughly.**
- **Be careful so that metal tools or jumper cables do not contact positive battery terminal (or metal in contact with it) and any other metal on vehicle, because a short circuit could occur.**
- **Batteries should always be kept out of reach of children.**

1) Set parking brake and place automatic transmission in PARK (NEUTRAL on manual transmission).
2) Turn OFF ignition switch, turn OFF lights and all other electrical loads.
3) Check built-in indicator (if equipped). If it is clear or light yellow, replace the battery.
4) Attach end of one jumper cable to positive terminal of booster battery and the other end of the same cable to positive terminal of discharged battery. (Use 12-volt battery only to jump start engine).
5) Attach one end of the remaining negative cable to negative terminal of booster battery, and the other end to a solid engine ground (such as exhaust manifold) at least 45 cm (18 in.) away from battery of vehicle being started.

**⚠ WARNING**

**Do not connect negative cable directly to negative terminal of dead battery.**

6) Start engine of vehicle with booster battery and turn off electrical accessories. Then start engine of the vehicle with discharged battery.
7) Disconnect jumper cable in the exact reverse order.

### With Charging Equipment

**⚠ CAUTION**

**When jump starting engine with charging equipment, be sure equipment used is 12-volt and negative ground. Do not use 24-volt charging equipment. Using such equipment can cause serious damage to electrical system or electronic parts.**

www.cargeek.ir

www.CarGeek.ir


## Battery Dismounting and Remounting

S5JB0A1A06005

**⚠ WARNING**

**When handling battery, following safety precautions should be followed:**

- **Hydrogen gas is produced by battery. A flame or spark near battery may cause the gas to ignite.**
- **Battery fluid is highly acidic. Avoid spilling on clothing or other fabric. Any spilled electrolyte should be flushed with large quantity of water and cleaned immediately.**

### Dismounting

1) Disconnect negative cable.
2) Disconnect positive cable.
3) Remove retainer.
4) Remove battery.

### Handling

When handling battery, the following safety precautions should be followed:

- Hydrogen gas is produced by battery. A flame or spark near battery may cause the gas to ignite.
- Battery fluid is highly acidic. Avoid spilling on clothing or other fabric. Any spilled electrolyte should be flushed with large quantity of water and cleaned immediately.

### Remounting

1) Reverse removal procedure.
2) Tighten battery cables securely.

**NOTE**

**Check to be sure that ground cable has enough clearance to hood panel by terminal.**

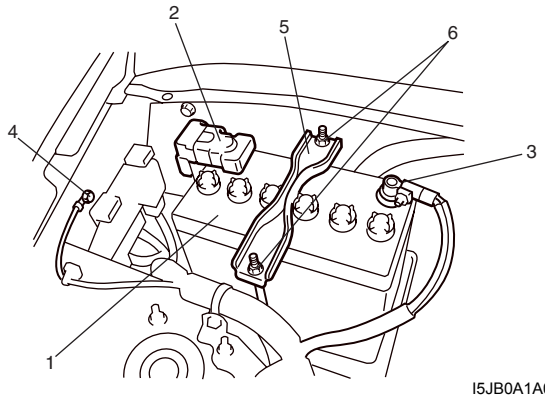


I5JB0A1A0007-01

| | |
|---|---|
| 1. Battery | 4. Body ground bolt |
| 2. Positive cable | 5. Retainer |
| 3. Negative cable | 6. Nut |

## Water Pump and Generator Drive Belt Removal and Installation (For M16 Engine)

S5JB0A1A06011

### Removal

1) Disconnect negative cable at battery.
2) If vehicle equipped with A/C, remove compressor drive belt before removing water pump belt (1). Refer to “P/S Pump and A/C Compressor (If Equipped) Drive Belt Removal and Installation for M16 Engine Model: in Section 6C”.
3) Loosen drive belt adjusting bolt (2) and generator pivot bolt (3).

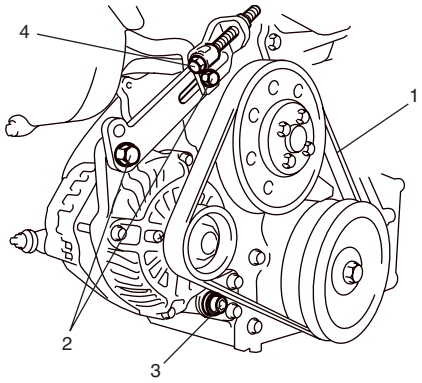


I5JB0A1A0001-01

4) Loosen water pump and generator drive belt adjuster bolt (4) to displace generator and then remove water pump belt.

### Installation

1) Install belt (1) to water pump pulley (2), crankshaft pulley (3) and generator pulley (4).
2) Adjust belt tension by referring to “Water Pump and Generator Drive Belt Tension Inspection and Adjustment (For M16 Engine): ”.
3) If vehicle equipped with A/C, install compressor drive belt referring to “P/S Pump and A/C Compressor (If Equipped) Drive Belt Removal and Installation for M16 Engine Model: in Section 6C”.

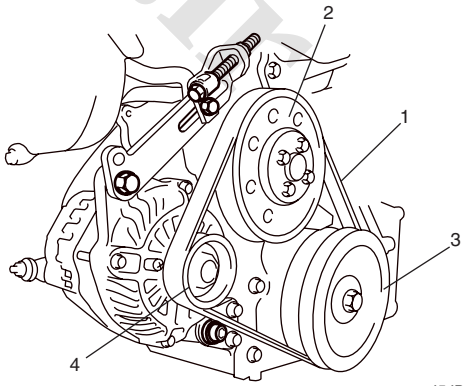


I5JB0A1A0002-01

4) Connect negative cable at battery.

www.cargeek.ir

www.CarGeek.ir

## Water Pump and Generator Drive Belt Tension Inspection and Adjustment (For M16 Engine)

S5JB0A1A06012

**⚠ WARNING**

- **Disconnect negative cable at battery before checking and adjusting belt tension.**
- **To help avoid danger of being burned, do not remove radiator cap while engine and radiator are still hot. Scalding fluid and steam can be blown out under pressure if cap is taken off too soon.**

1) Inspect belt for cracks, cuts, deformation, wear and cleanliness. If it is necessary to replace belt, refer to “Water Pump and Generator Drive Belt Removal and Installation (For M16 Engine): ”.
2) Check belt for tension. Belt is in proper tension when it deflects the following specification under thumb pressure (about 10 kg or 22 lb.).

**Water pump / generator drive belt tension**
**“a”: 7.0 – 8.5 mm (0.28 – 0.33 in.) as deflection / 10 kg (22 lbs)**

**NOTE**

**When replacing belt with a new one, adjust belt tension to 5.5 – 6.5 mm (0.22 – 0.26 in.).**

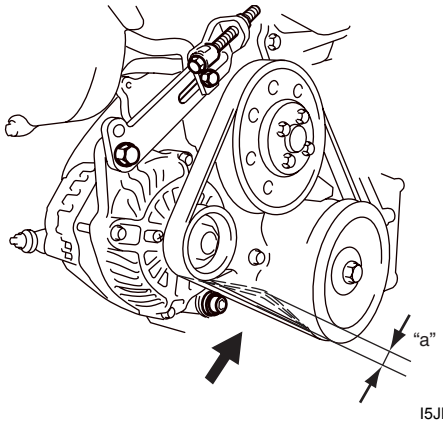


I5JB0A1A0008-01

3) If belt is too tight or too loose, adjust it to proper tension by displacing generator position.
4) To adjust belt tension, loosen generator adjusting bolt (3) and displace generator position by loosening on tightening adjuster bolt.
5) Tighten generator adjusting bolt (1) and pivot bolts (2) as specified torque.

**Tightening torque**
**Generator adjusting bolt (a): 25 N·m (2.5 kgf-m, 18.5 lb-ft)**
**Generator pivot bolt (b): 52.5 N·m (5.25 kgf-m, 38.0 lb-ft)**

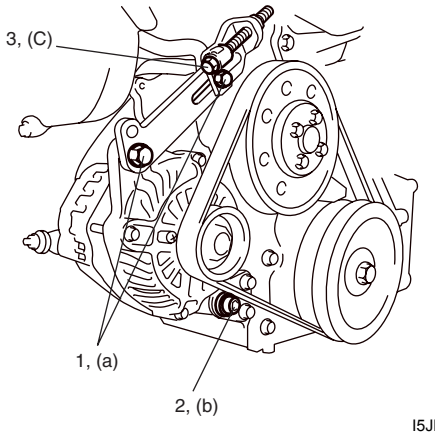


I5JB0A1A0009-01

6) Check belt for tension after turn crankshaft two rotations clockwise.
7) Tightening generator adjuster bolt (3) as specified torque.

**Tightening torque**
**Generator adjuster bolt (c): 7.0 N·m (0.7 kgf-m, 5.0 lb-ft)**

8) Connect negative cable at battery.

www.cargeek.ir

www.CarGeek.ir


## Water Pump and Generator Drive Belt On-Vehicle Inspection (For J20 Engine)

S5JB0A1A06013

**[Type A]**

1) Disconnect negative cable at battery.
2) Inspect belt for cracks, cuts, deformation, wear and cleanliness. If any of above conditions are found, replace belt, referring to “Water Pump and Generator Drive Belt Removal and Installation (For J20 Engine): ”.
3) Make sure that tension indicator “A” is within the range “a”.
   If indicator “A” comes into the NG range “c” passing “b”, replace generator belt with a new one.

**NOTE**

**Use mirror when checking belt tension.**

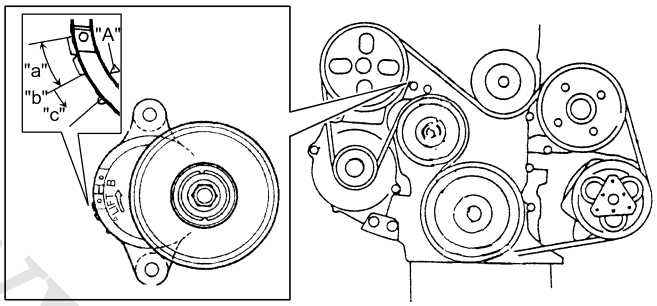


I1SQ01020003-01

**[Type B]**

- Inspect belt for cracks, cuts, deformation, wear and cleanliness. If any of these conditions are found, replace belt, referring to “Water Pump and Generator Drive Belt Removal and Installation (For J20 Engine): ”.
- Check to make sure that tension indicators are as follows in the figure by using mirror.
  a. If the tension indicator “B” is found to the left of the indicator “A”, replace the generator belt.
  b. If new generator belt has been installed, indicator “A” should be within “a” of the figure.
     If it isn’t, it means that belt is not installed properly.
     Reinstall it properly.

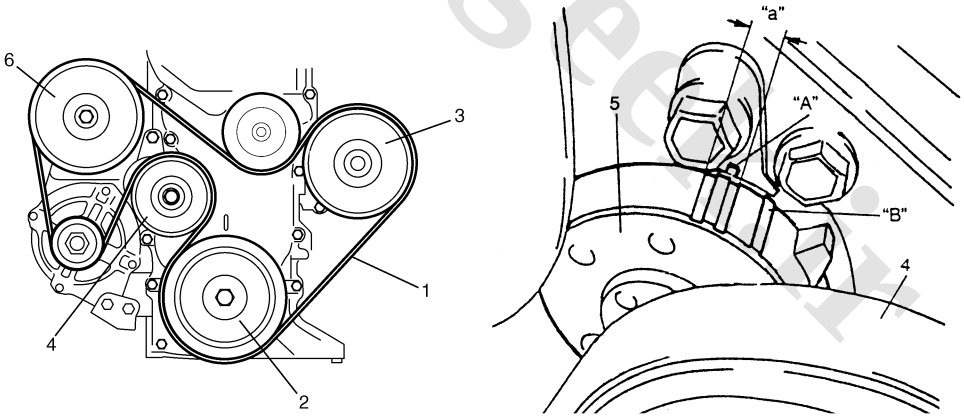


I5JB0A1A0010-01

| | | |
|---|---|---|
| 1. Water pump and generator drive belt | 3. Water pump pulley | 5. Tensioner |
| 2. Crankshaft pulley | 4. Tension pulley | 6. Power steering pump pulley |

www.cargeek.ir

www.CarGeek.ir

## Water Pump and Generator Drive Belt Removal and Installation (For J20 Engine)

S5JB0A1A06014

### Removal

**⚠ WARNING**

**Disconnect negative (–) cable at battery before removing and installing generator belt.**

1) Loosen tensioner by turning the tensioner pulley (2) clockwise.
2) While holding the tensioner and belt loose, remove generator belt (1).

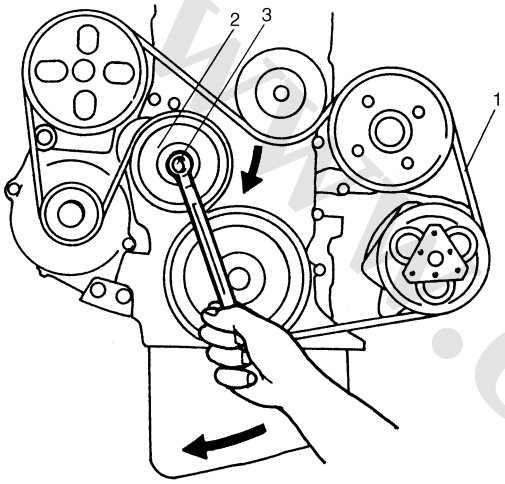


I3TR011A4001-01

3. Tensioner pulley bolt

### Installation

1) Loosen tensioner by turning the tensioner pulley (2) clockwise.
2) While holding the tensioner, install generator belt (1).

**NOTE**

- **Make sure that the belt fits each pulley's groove properly.**
- **After installing generator belt, make sure that tension indicator is within standard range referring to "Water Pump and Generator Drive Belt On-Vehicle Inspection (For J20 Engine): ".**

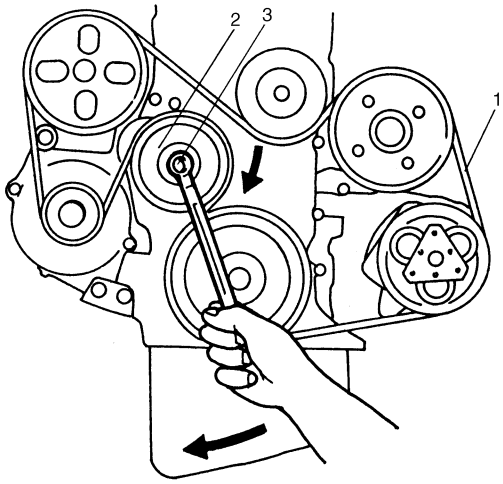


I3TR011A4001-01

3. Tensioner pulley bolt

www.cargeek.ir

www.CarGeek.ir


## Generator Dismounting and Remounting

S5JB0A1A06006

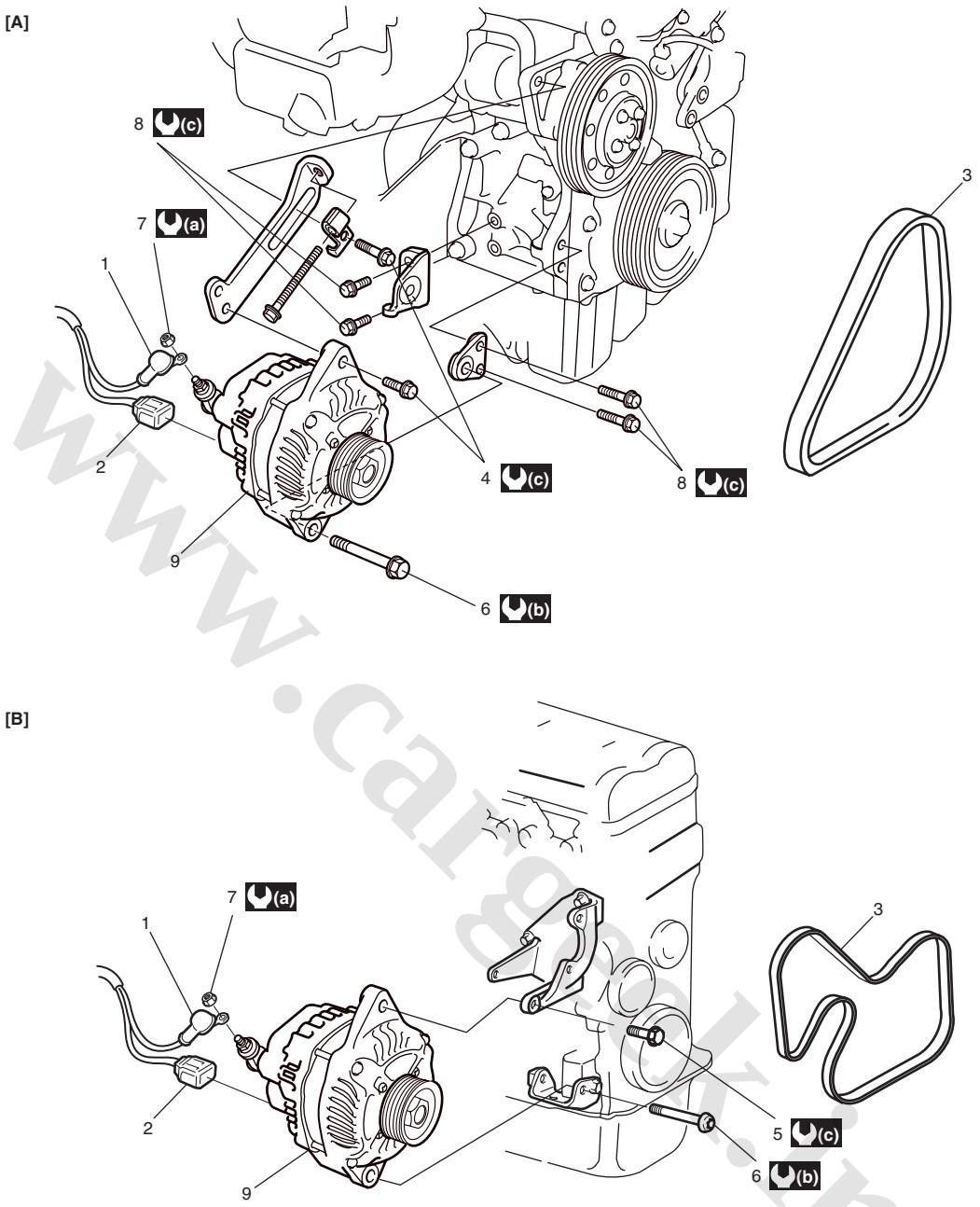


I5JB0A1A0003-02

| | | |
|---|---|---|
| [A]: For M16 Engine | 4. Generator adjusting bolt (For M16 Engine) | 9. Generator |
| [B]: For J20 Engine | 5. Generator mounting bolt (For J20 Engine) | (a) : 7.0 N·m (0.7 kgf-m, 5.0 lb-ft) |
| 1. “B” terminal wire | 6. Generator pivot bolt | (b) : 52.5 N·m (5.25 kgf-m, 38.0 lb-ft) |
| 2. coupler | 7. “B” terminal nut | (c) : 25 N·m (2.5 kgf-m, 18.5 lb-ft) |
| 3. Water pump and generator drive belt | 8. Generator blacket bolt | |

www.cargeek.ir

www.CarGeek.ir

### Dismounting

1) Disconnect negative (–) cable at battery.
2) Disconnect MAF sensor coupler (For J20 Engine).
3) Remove air cleaner case and air cleaner outlet hose (For J20 Engine).
4) Disconnect generator lead wire (“B” terminal wire) and coupler from generator.
5) Remove generator belt. Refer to “Water Pump and Generator Drive Belt Removal and Installation (For M16 Engine): ” or “Water Pump and Generator Drive Belt Removal and Installation (For J20 Engine): ”.
6) Remove generator drive belt adjusting bolt (For M16 Engine) and generator mounting bolt (For J20 Engine) and generator pivot bolt.
7) Remove generator.

### Remounting

1) Mount generator on the generator bracket.
2) Tighten generator mounting bolts and generator pivot bolt as specified torque (For J20 Engine).
3) Install generator belt. Refer to “Water Pump and Generator Drive Belt Removal and Installation (For M16 Engine): ” or “Water Pump and Generator Drive Belt Removal and Installation (For J20 Engine): ”.
4) Connect “B” terminal wire and coupler to generator.
5) Install air cleaner case and air cleaner outlet hose (For J20 Engine).
6) Connect MAF sensor coupler (For J20 Engine).
7) Connect negative (–) cable at battery.

## Generator Components

S5JB0A1A06007

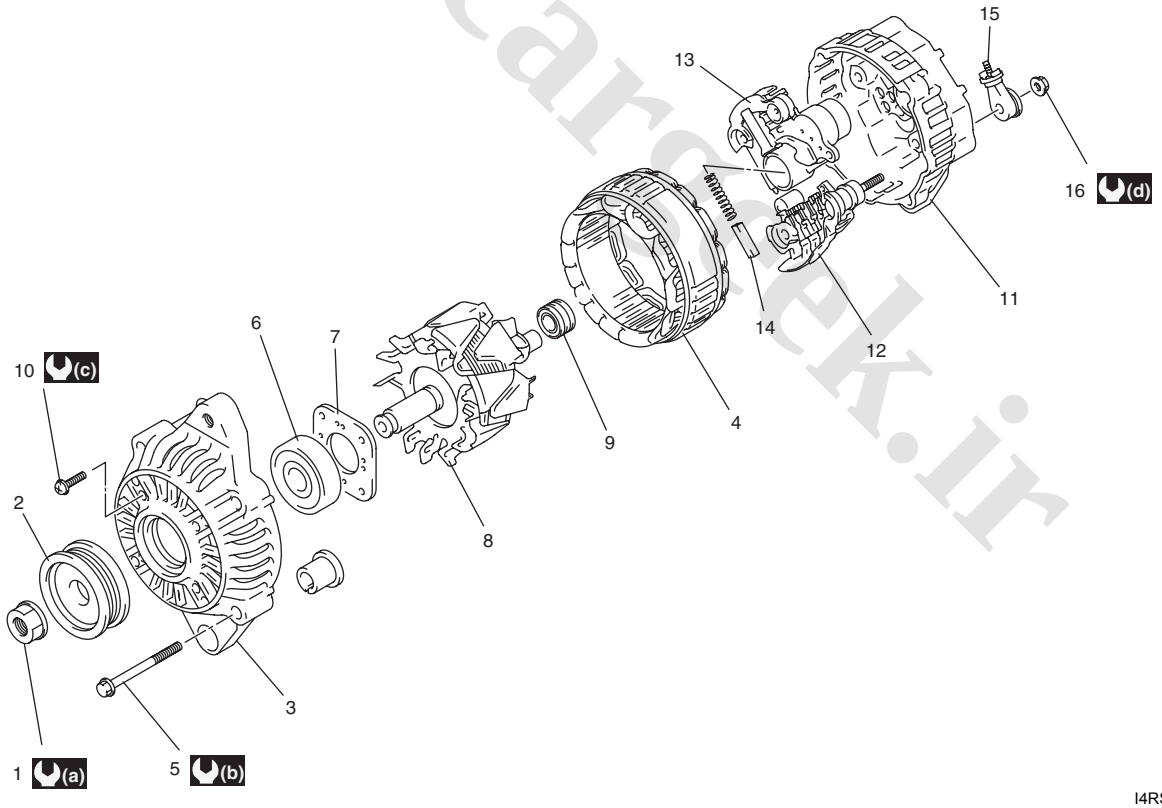


I4RS0B1A0007-01

| | | | |
|---|---|---|---|
| 1. Pulley nut | 6. Drive end bearing | 11. Rear housing | 16. “B” terminal nut |
| 2. Pulley | 7. Bearing retainer | 12. Rectifier | (a) : 118 N·m (11.8 kgf-m, 85.5 lb-ft) |
| 3. Front housing | 8. Rotor | 13. Regulator | (b) : 4.5 N·m (0.45 kgf-m, 3.5 lb-ft) |
| 4. Stator | 9. Rear end bearing | 14. Brush | (c) : 3.5 N·m (0.35 kgf-m, 2.5 lb-ft) |
| 5. Frame bolt | 10. Retainer screw | 15. “B” terminal | (d) : 8.0 N·m (0.8 kgf-m, 6.0 lb-ft) |

www.cargeek.ir

www.CarGeek.ir


## Generator Inspection

S5JB0A1A06009

### Rotor

- Using ohmmeter, connect positive terminal to “FR” terminal and connect negative terminal to “B” terminal of generator, check that continuity between “B” terminal and “FR” terminal. If there is no continuity, replace rotor or regulator.

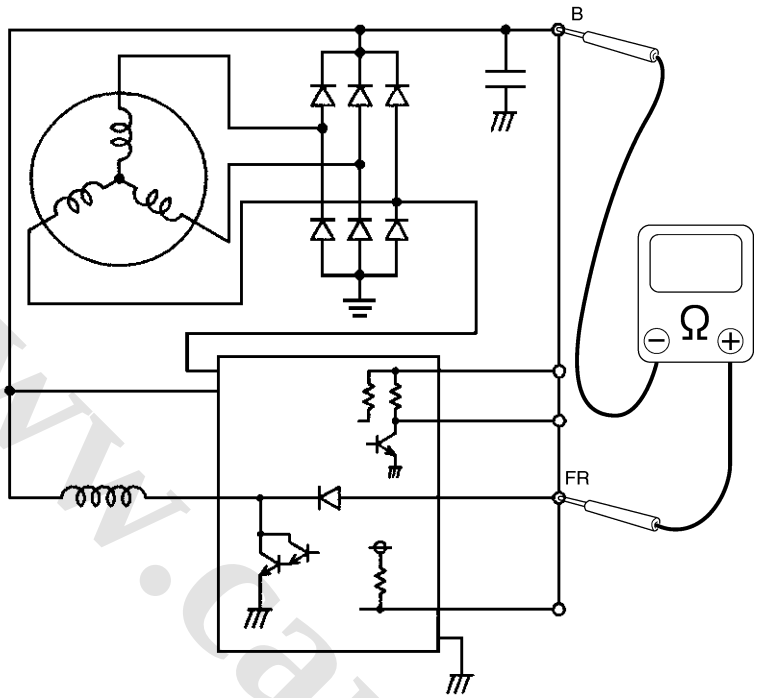


I5JB0A1A0012-01

- Using ohmmeter, check for continuity between slip rings of rotor. If there is no continuity, replace rotor (1).

  **Resistance between slip rings of rotor**
  **1.7 – 2.0 Ω**

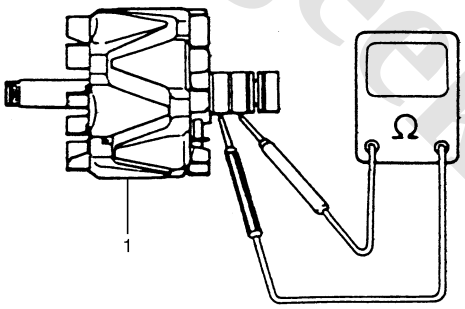


IYSQ011A0035-01

- Using ohmmeter, check that there is no continuity between slip ring and rotor core. If there is continuity, replace rotor (1).

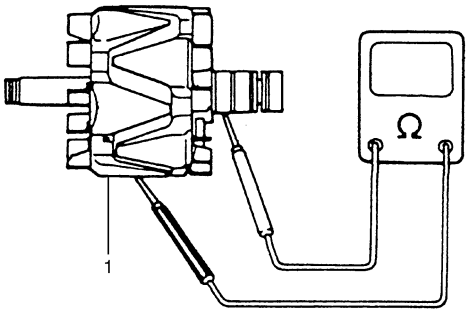


IYSQ011A0036-01

- Check slip rings for roughness or scoring. If rough or scored, replace rotor.

www.cargeek.ir

www.CarGeek.ir

**Stator**

- Using ohmmeter, check all leads for continuity. If there is no continuity, replace stator (1).

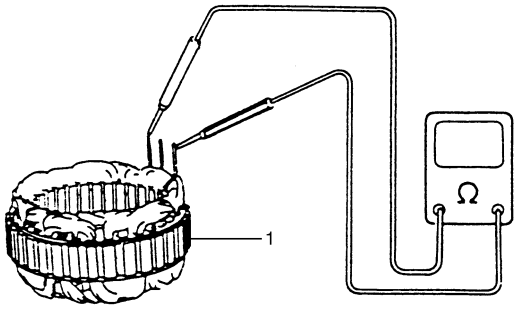


IYSQ011A0037-01

- Using ohmmeter, check that there is no continuity between coil leads (2) and stator core (1). If there is continuity, replace stator.

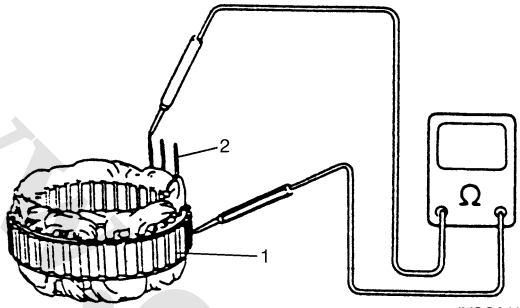


IYSQ011A0038-01

**Brush and brush holder**

Check each brush for wear by measuring its length. If brush is found worn down to service limit, replace brush.

**Brush length "a"**
**Standard: 16 mm (0.63 in.)**
**Limit: 5 mm (0.20 in.)**

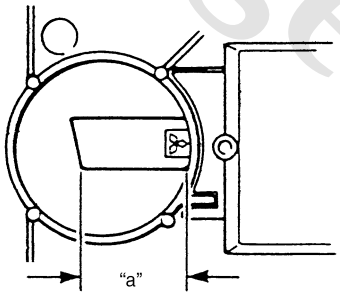


IYSQ011A0039-01

www.cargeek.ir

www.CarGeek.ir


**Rectifier**

1) Using ohmmeter, check continuity between each of upper and lower rectifier bodies and each diode lead (2). Check both directions by reversing probes of ohmmeter and there should be only one-way continuity in each case. If check result is not satisfactory, replace rectifier (1).
2) In the same manner as described in above Step 1), check that there is only one-way continuity between both leads of diode trio.

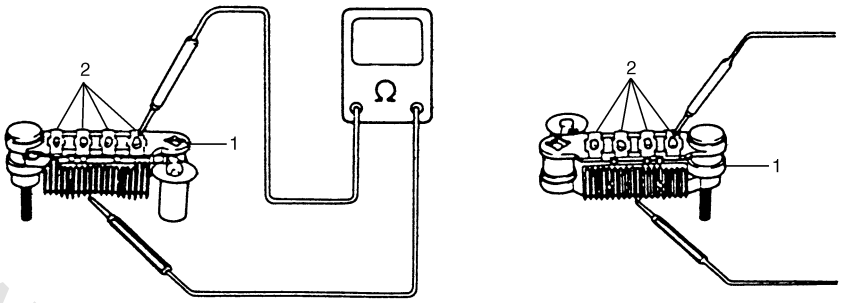


IYSQ011A0040-01

**Condenser**

Check condenser capacity.

**Condenser capacity**

**0.5 μF**

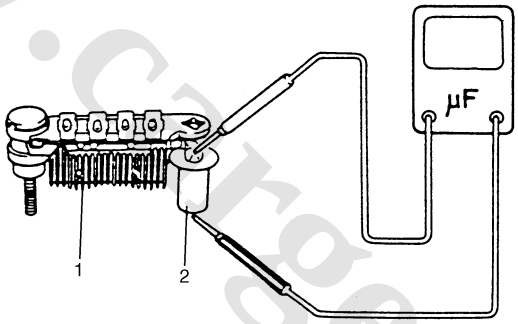


IYSQ011A0041-01

| | |
|---|---|
| 1. | Rectifier |
| 2. | Condenser |

www.cargeek.ir

www.CarGeek.ir

# Specifications

## Charging System Specifications

S5JB0A1A07001

### Battery

**NOTE**

**The battery used in each vehicle is one of the following two types, depending on specification.**

| Battery type | 55B24R (S) | 55D23L |
|---|---|---|
| Rated Capacity AH/5HR, 12 Volts | 36 | 48 |
| Electrolyte L (US/Imp. pt) | 3.1 (6.55/5.46) | 3.9 (8.24/6.86) |
| Electrolyte S.G. | 1.28 when fully charged at 20 °C (68 °F) | |

### Generator

**NOTE**

**The generator used in each vehicle is one of the following three types, depending on specification.**

| Type | 80 A type |
|---|---|
| Rated voltage | 12 V |
| Nominal output | 80 A |
| Permissible max. speed | 18000 r/min (rpm) |
| No-load speed | 1200 r/min (rpm) |
| Setting voltage | 14.2 to 14.8 V |
| Permissible ambient temperature | –30 to 100 °C (–22 to 212 °F) |
| Polarity | Negative ground |
| Rotation | Clockwise viewed from pulley side |

## Tightening Torque Specifications

S5JB0A1A07002

| Fastening part | Tightening torque | | | Note |
|---|---|---|---|---|
| | N·m | kgf-m | lb-ft | |
| Generator adjusting bolt | 25 | 2.5 | 18.5 | ☞ |
| Generator pivot bolt | 52.5 | 5.25 | 38.0 | ☞ |
| Generator adjuster bolt | 7.0 | 0.7 | 5.0 | ☞ |

**NOTE**

**The specified tightening torque is also described in the following.**
**“Generator Dismounting and Remounting: ”**
**“Generator Components: ”**

**Reference:**
For the tightening torque of fastener not specified in this section, refer to “Fastener Information:  in Section 0A”.

www.cargeek.ir

www.CarGeek.ir


# Exhaust System

## General Description

### Exhaust System Description

S5JB0A1B01001

The exhaust system consists of an exhaust manifold, three-way catalytic converter (TWC) in catalyst case, exhaust pipes, a muffler and seals, gasket and etc.
The three-way catalytic converter is an emission control device added to the exhaust system to lower the levels of Hydrocarbon (HC), Carbon Monoxide (CO), and Oxides of Nitrogen (NOx) pollutants in the exhaust gas.

## Diagnostic Information and Procedures

### Exhaust System Check

S5JB0A1B04001

**⚠ WARNING**

**To avoid the danger of being burned, do not touch the exhaust system when the system is hot. Any service on the exhaust system should be performed when the system is cool.**

At every interval of periodic maintenance service, and when vehicle is raised for other service, check exhaust system as follows:

- Check rubber mountings for damage, deterioration, and out of position.

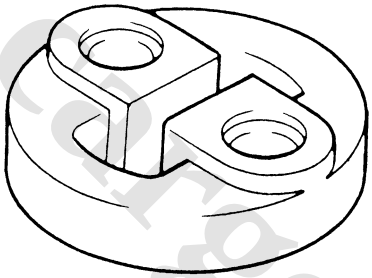

IYSY011B0003-01

- Check exhaust system for leakage, loose connection, dent and damage.
- If bolts or nuts are loosened, tighten them to specified torque referring to “Exhaust System Components: ”.
- Check nearby body areas damaged, missing, or mispositioned part, open seam, hole connection or any other defect which could permit exhaust fumes to seep into vehicle.
- Make sure that exhaust system components have enough clearance from underbody to avoid overheating and possible damage to passenger compartment carpet.
- Any defect should be fixed at once.

## Repair Instructions

### Exhaust System Components

S5JB0A1B06001

**⚠ WARNING**

**To avoid the danger of being burned, do not touch the exhaust system when the system is hot. Any service on the exhaust system should be performed when the system is cool.**

www.cargeek.ir

www.CarGeek.ir

## For M16 Engine Model

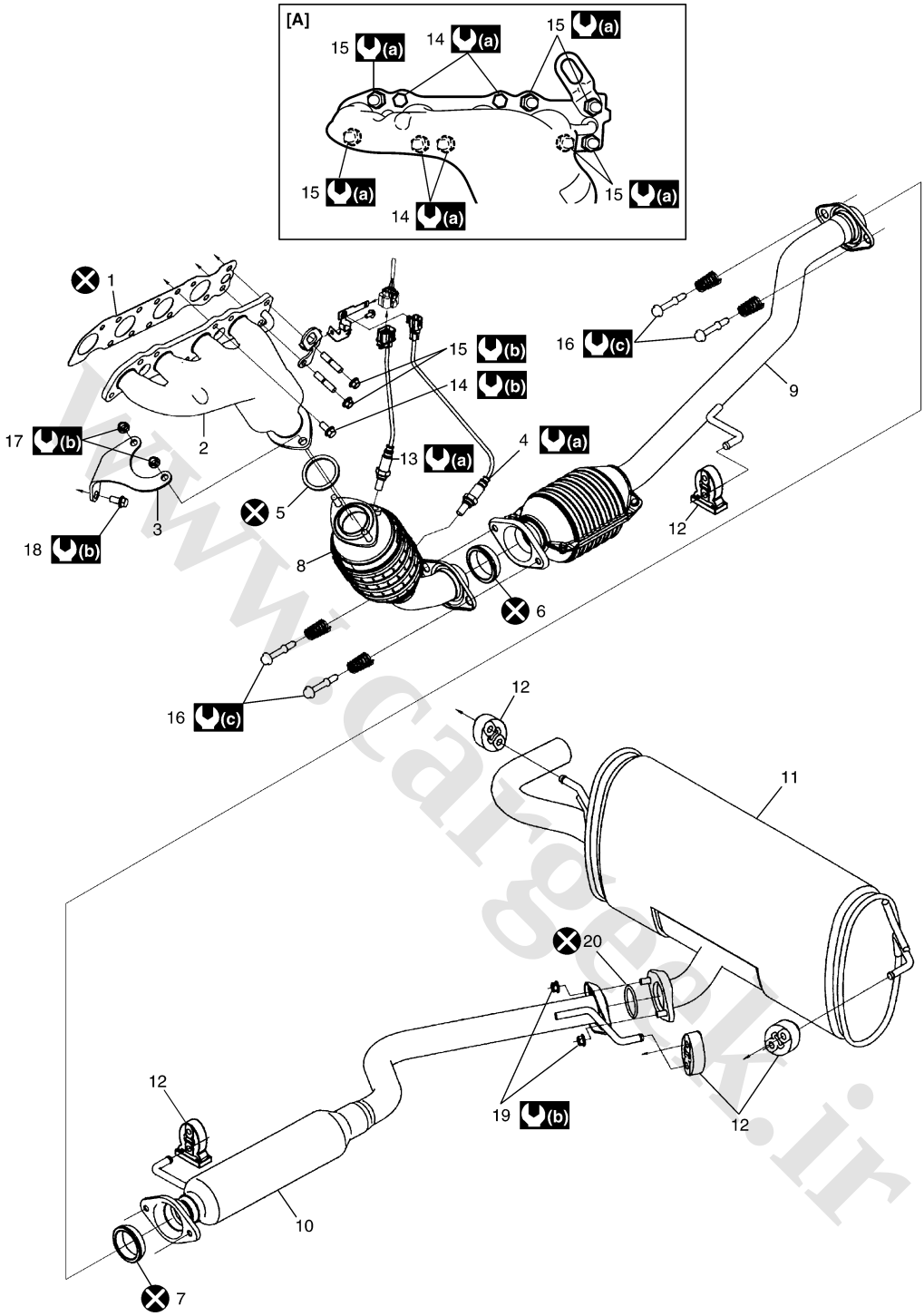


I5JB0A1B1002-03

| | | |
|---|---|---|
| [A]: Installing location of exhaust manifold bold and nut. | 9. Exhaust pipe No.2 | 18. Exhaust pipe No.1 bracket bolt |
| 1. Exhaust manifold gasket | 10. Exhaust center pipe | 19. Exhaust center pipe nut |
| 2. Exhaust manifold | 11. Muffler | 20. Exhaust center pipe gasket |
| 3. Exhaust pipe No.1 bracket | 12. Mounting | (a) : 45 N·m (4.5 kgf-m, 32.5 lb-ft) |
| 4. HO2S | 13. A/F sensor | (b) : 50 N·m (5.0 kgf-m, 36.5 lb-ft) |
| 5. Exhaust pipe No.1 gasket | 14. Exhaust manifold bolt | (c) : 43 N·m (4.3 kgf-m, 31.0 lb-ft) |
| 6. No.1 seal ring | 15. Exhaust manifold nut | ⊗ : Do not reuse. |
| 7. No.2 seal ring | 16. Exhaust pipe bolt | |
| 8. Exhaust pipe No.1 | 17. Exhaust pipe No.1 bracket nut | |

www.cargeek.ir

## For J20 Engine Model

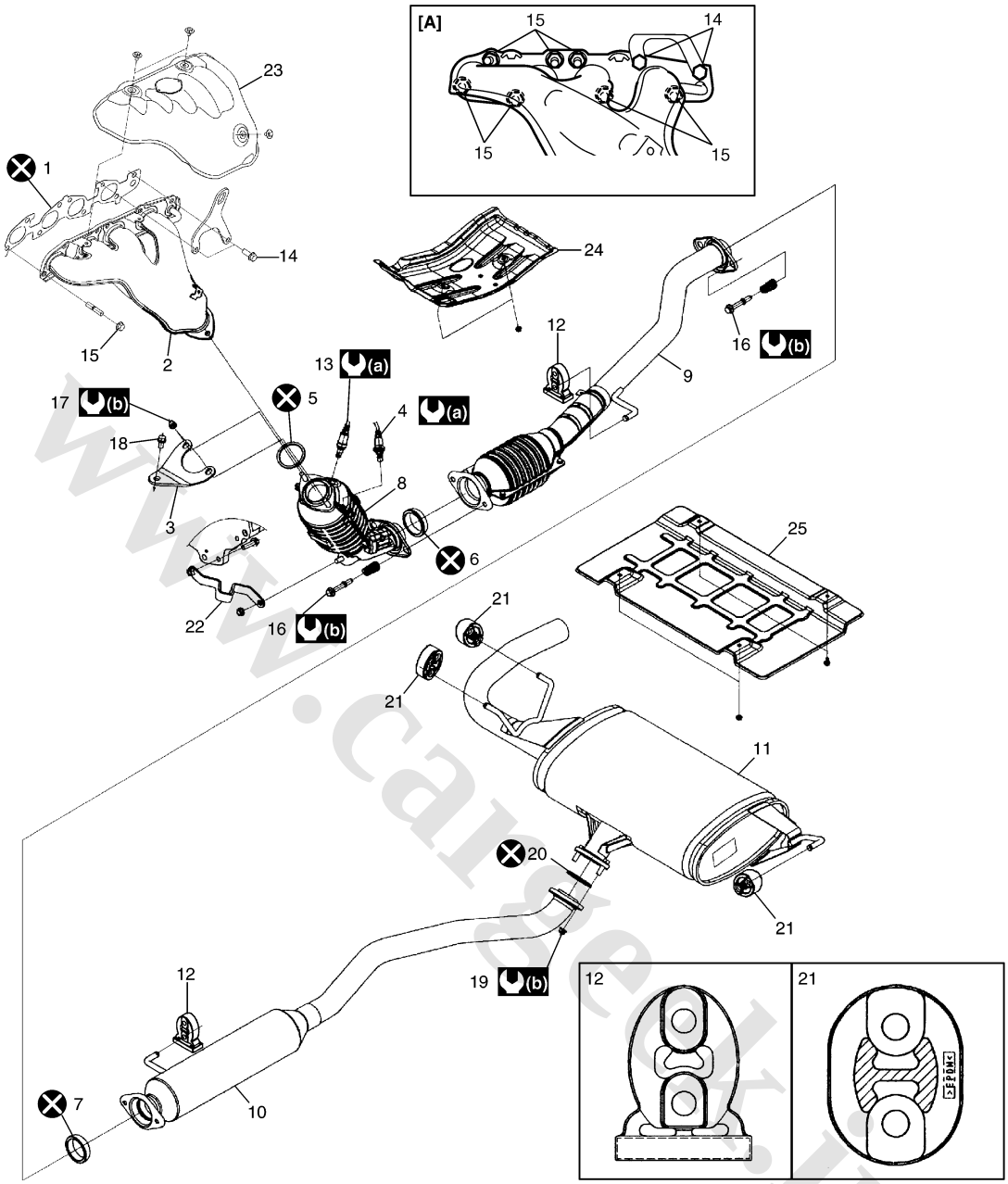


I5JB0A1B1003-05

| | | |
|---|---|---|
| [A]: Installing location of exhaust manifold bold and nut. | 10. Exhaust center pipe | 20. Exhaust center pipe gasket |
| 1. Exhaust manifold gasket | 11. Muffler | 21. Muffler mounting |
| 2. Exhaust manifold | 12. Mounting | 22. Exhaust pipe No.2 bracket |
| 3. Exhaust pipe No.1 bracket | 13. A/F sensor | 23. Exhaust manifold cover |
| 4. HO2S | 14. Exhaust manifold bolt | 24. Heat protector panel |
| 5. Exhaust pipe No.1 gasket | 15. Exhaust manifold nut | 25. Heat protector rear panel |
| 6. No.1 seal ring | 16. Exhaust pipe bolt | (a) : 45 N·m (4.5 kgf-m, 32.5 lb-ft) |
| 7. No.2 seal ring | 17. Exhaust pipe No.1 bracket nut | (b) : 50 N·m (5.0 kgf-m, 36.5 lb-ft) |
| 8. Exhaust pipe No.1 | 18. Exhaust pipe No.1 bracket bolt | ⊗ : Do not reuse. |
| 9. Exhaust pipe No.2 | 19. Exhaust center pipe nut | |

www.cargeek.ir

www.CarGeek.ir

## Exhaust Manifold Removal and Installation (For M16 Engine Model)

S5JB0A1B06003

### Removal

**⚠ WARNING**

**To avoid danger of being burned, do not service exhaust system while it is still hot. Service should be performed after system cools down.**

1) Disconnect negative cable at battery.
2) Remove exhaust pipe No.1 bracket.
3) Remove exhaust manifold (1) and its gasket from cylinder head.

I5JB0A1B1004-01

### Installation

1) Install new gasket to cylinder head and exhaust pipe No.1. Then install exhaust manifold.
   Tighten manifold bolts (1) and nuts (2) to specified torque.

   **Tightening torque**
   **Exhaust manifold bolt and nut (a): 50 N·m (5.0 kgf-m, 36.5 lb-ft)**

   **NOTE**

   **Be sure to install exhaust manifold bolts and nuts to proper location referring to "Exhaust System Components: ".**

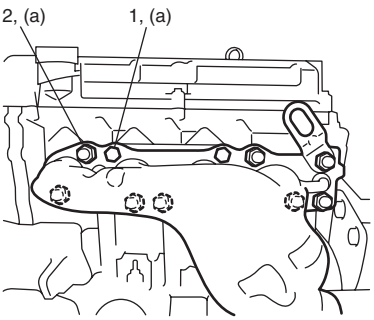


I5JB0A1B1001-01

2) Install exhaust pipe No.1 bracket (1).

   **Tightening torque**
   **Exhaust pipe No.1 bracket bolt and nut (a): 50 N·m (5.0 kgf-m, 36.5 lb-ft)**

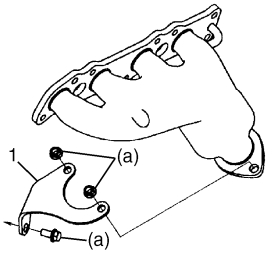


I5JB0A1B1009-01

3) Connect negative cable at battery.
4) Check exhaust system for exhaust gas leakage.

## Exhaust Manifold Removal and Installation (For J20 Engine Model)

S5JB0A1B06005

### Removal

**⚠ WARNING**

**To avoid danger of being burned, do not service exhaust system while it is still hot. Service should be performed after system cools down.**

1) Relieve fuel pressure in fuel feed line according to "Fuel Pressure Relief Procedure: in Section 1G".
2) Disconnect negative cable at battery.
3) Drain coolant referring to "Cooling System Draining: in Section 1F".
4) Disconnect fuel hoses (2) from fuel pipes (1).
5) Disconnect water outlet pipe (3) from radiator inlet hose.
6) Remove exhaust manifold cover (4).

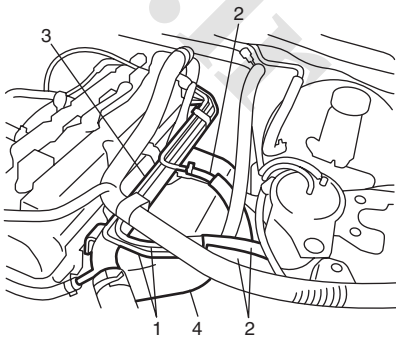


I5JB0A1B1005-01

www.cargeek.ir

www.CarGeek.ir


7) Remove exhaust pipe No.1 bracket (1).
8) Remove exhaust manifold (2) and its gasket (3) from cylinder head.

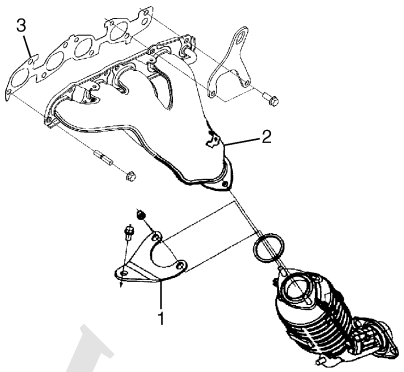

I5JB0A1B1006-01

**Installation**

1) Install new gasket (1) to cylinder head and exhaust pipe No.1. Then install exhaust manifold (2).
Tighten manifold bolts (4) and nuts (5) to specified torque.

**Tightening torque**
**Exhaust manifold bolt and nut (b): 50 N·m (5.0 kgf-m, 36.5 lb-ft)**

**NOTE**

**Be sure to install exhaust manifold bolts and nuts to proper location referring to "Exhaust System Components: ".**

2) Install exhaust pipe No.1 bracket (3) to exhaust manifold.
Tighten nuts to specified torque.

**Tightening torque**
**Exhaust No.1 pipe nut (a): 50 N·m (5.0 kgf-m, 36.5 lb-ft)**

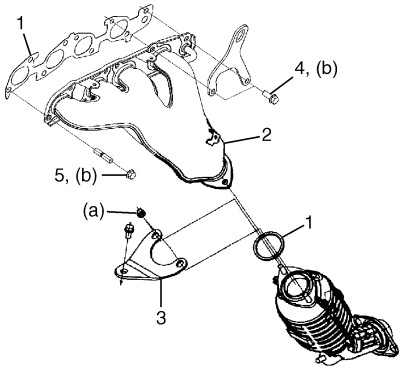

I5JB0A1B1007-04

3) Install exhaust manifold cover (1).
4) Connect water outlet pipe (2) from radiator inlet hose.
5) Connect fuel pipe (3) from fuel hoses.

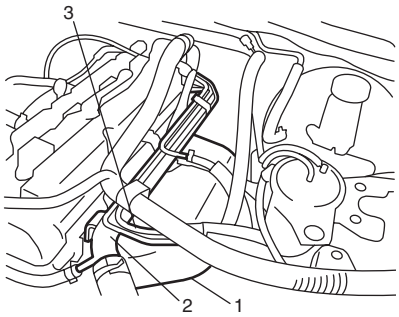

I5JB0A1B1008-01

6) Refill cooling system referring to "Cooling System Flush and Refill: in Section 1F".
7) Connect negative cable at battery.
8) Verify that there is no fuel leakage, coolant leakage and exhaust gas leakage at each connection.

## Exhaust Pipe and Muffler Removal and Installation

S5JB0A1B06004

For replacement of exhaust pipe, be sure to hoist vehicle and observe WARNING under "Exhaust System Components: " and the following.

**⚠ WARNING**

**To avoid danger of being burned, do not service exhaust system while it is still hot. Service should be performed after system cools down.**

**⚠ CAUTION**

**Exhaust manifold have three way catalytic converter in it, it should not be exposed to any impulse.**
**Be careful not to drop it or hit it against something.**

- Tighten bolts and nuts to specified torque when reassembling. Refer to "Exhaust System Components: ".
- After installation, start engine and check each joint of exhaust system for leakage.

www.cargeek.ir

www.CarGeek.ir

# Specifications

## Tightening Torque Specifications

S5JB0A1B07001

| Fastening part | Tightening torque | | | Note |
|---|---|---|---|---|
| | N·m | kgf-m | lb-ft | |
| Exhaust manifold bolt and nut | 50 | 5.0 | 36.5 | ☞ / ☞ |
| Exhaust pipe No.1 bracket bolt and nut | 50 | 5.0 | 36.5 | ☞ |
| Exhaust No.1 pipe nut | 50 | 5.0 | 36.5 | ☞ |

**NOTE**

**The specified tightening torque is also described in the following.**
**“Exhaust System Components: ”**

**Reference:**
For the tightening torque of fastener not specified in this section, refer to “Fastener Information:  in Section 0A”.

www.cargeek.ir

www.cargeek.ir

www.CarGeek.ir


# Section 2

# Suspension

## CONTENTS


**Precautions ..... 2-1**
**Precautions ..... 2-1**
Precautions on Suspension ..... 2-1

**Suspension General Diagnosis ..... 2A-1**
**Diagnostic Information and Procedures ..... 2A-1**
Suspension, Wheels and Tires Symptom Diagnosis ..... 2A-1
**Specifications ..... 2A-3**
Wheel Alignment Specifications ..... 2A-3

**Front Suspension ..... 2B-1**
**General Description ..... 2B-1**
Front Suspension Construction ..... 2B-1
Front Wheel Alignment Construction ..... 2B-2
**Repair Instructions ..... 2B-2**
Front Wheel Alignment Inspection and Adjustment ..... 2B-2
Front Strut Assembly Components ..... 2B-4
Front Strut Assembly Removal and Installation ..... 2B-5
Front Strut Assembly Disassembly and Assembly ..... 2B-7
Front Strut Assembly Check ..... 2B-8
Front Wheel Hub Assembly and Steering Knuckle Components ..... 2B-9
Front Wheel Hub Assembly Removal and Installation ..... 2B-9
Steering Knuckle Removal and Installation ..... 2B-11
Front Wheel Hub, Disc, Nut and Bearing Check ..... 2B-12
Suspension Control Arm Removal and Installation ..... 2B-13
Suspension Control Arm / Bushing Disassembly and Assembly ..... 2B-15
Suspension Control Arm / Steering Knuckle Check ..... 2B-16
Suspension Control Arm Bushing Check ..... 2B-16
Suspension Control Arm Joint Check ..... 2B-16
Front Suspension Frame, Stabilizer Bar and/or Bushings Components ..... 2B-17
Front Suspension Frame, Stabilizer Bar and/or Bushings Removal and Installation ..... 2B-18
Front Suspension Frame Check ..... 2B-22
Front Stabilizer Bar, Bushing and/or Joint Check ..... 2B-22
Front Suspension Fasteners Check ..... 2B-23
**Specifications ..... 2B-23**
Tightening Torque Specifications ..... 2B-23
**Special Tools and Equipment ..... 2B-24**
Recommended Service Material ..... 2B-24
Special Tool ..... 2B-24

**Rear Suspension ..... 2C-1**
**General Description ..... 2C-1**
Rear Suspension Construction ..... 2C-1
Rear Wheel Alignment Construction ..... 2C-2
**Repair Instructions ..... 2C-2**
Rear Wheel Alignment Inspection and Adjustment ..... 2C-2
Rear Shock Absorber and Rear Coil Spring Components ..... 2C-4
Rear Shock Absorber Removal and Installation ..... 2C-5
Shock Absorber Check ..... 2C-6
Rear Coil Spring and Bump Stopper Removal and Installation ..... 2C-6
Rear Coil Spring Check ..... 2C-8
Rod and Arm Components ..... 2C-9
Control Rod Removal and Installation ..... 2C-10
Control Rod / Bushing Disassembly and Assembly ..... 2C-12
Control Rod Check ..... 2C-12
Trailing Rod Removal and Installation ..... 2C-13
Trailing Rod / Bushing Disassembly and Assembly ..... 2C-14
Trailing Rod Check ..... 2C-15
Lower Arm Removal and Installation ..... 2C-15
Lower Arm / Bushing Disassembly and Assembly ..... 2C-16
Lower Arm Check ..... 2C-17
Upper Arm Removal and Installation ..... 2C-17
Upper Arm / Bushing Disassembly and Assembly ..... 2C-19
Upper Arm Check ..... 2C-19
Rear Suspension Frame Components ..... 2C-20
Rear Suspension Frame Removal and Installation ..... 2C-21
Rear Suspension frame / Bushing Disassembly and Assembly ..... 2C-23
Rear Suspension Frame, Bushing and Pad Check ..... 2C-24
Rear Wheel Hub Assembly and Rear Suspension Knuckle Components ..... 2C-24
Rear Wheel Hub Assembly Removal and Installation ..... 2C-25




www.cargeek.ir

www.CarGeek.ir

Rear Wheel Hub Assembly, Wheel Bearing and Wheel Stud Inspection ....2C-27
Rear Wheel Disc, Nut and Bearing Check ....2C-27
Rear Suspension knuckle Removal and Installation ....2C-28
Rear Suspension Knuckle Check ....2C-31
Rear Suspension Fasteners Check ....2C-31
**Specifications ....2C-32**
Tightening Torque Specifications ....2C-32
**Special Tools and Equipment ....2C-33**
Recommended Service Material ....2C-33
Special Tool ....2C-33

**Wheels and Tires .... 2D-1**
**General Description ....2D-1**
Tires Description ....2D-1
Wheels Description ....2D-2
Irregular and/or Premature Wear Description ....2D-2
Wear Indicators Description ....2D-3
Radial Tire Waddle Description ....2D-3
Radial Tire Lead / Pull Description ....2D-4
Balancing Wheels Description ....2D-4
**Repair Instructions ....2D-5**
General Balance Procedures ....2D-5
Tire Rotation ....2D-5
Wheel Removal and Installation ....2D-6
Tire Mounting and Dismounting ....2D-6
Tire Repair ....2D-6
**Specifications ....2D-7**
Wheels and Tires Specifications ....2D-7
Tightening Torque Specifications ....2D-7

www.cargeek.ir

www.cargeek.ir

www.CarGeek.ir


# Precautions

## Precautions

### Precautions on Suspension

S5JB0A2000001

**Suspension Caution**
Refer to “Suspension Caution: in Section 00”.

**Wheels and Tires Caution**
Refer to “Wheels and Tires Caution: in Section 00”.

**General Precautions**
Refer to “General Precautions: in Section 00”.

**Vehicle Lifting Points**
Refer to “Vehicle Lifting Points: in Section 0A”.

**Fastener Caution**
Refer to “Fastener Caution: in Section 00”.

**Fastener Information**
Refer to “Fastener Information: in Section 0A”.

**Brake Caution**
Refer to “Brakes Caution and Note: in Section 00”.

www.cargeek.ir
www.cargeek.ir

 www.CarGeek.ir

# Suspension General Diagnosis

## Diagnostic Information and Procedures

### Suspension, Wheels and Tires Symptom Diagnosis

S5JB0A2104001

| Condition | Possible cause | Correction / Reference Item |
|---|---|---|
| ***Vehicle pulls (Leads)*** | Mismatched or uneven tires | *Replace tires.* |
| | Tires not adequately inflated | *Adjust tire pressure.* |
| | Broken or sagging coil springs | *Replace coil springs.* |
| | Radial tire lateral force | *Replace tire.* |
| | Disturbed wheel alignment | *Check and adjust wheel alignment.* |
| | Brake dragging in one road wheel | *Repair brake.* |
| | Loose, bent or broken front or rear suspension parts | *Tighten or replace related suspension parts.* |
| ***Abnormal or excessive tire wear*** | Sagging or broken coil spring | *Replace coil spring.* |
| | Tire out of balance | *Adjust balance or replace tire.* |
| | Disturbed wheel alignment | *Check and adjust wheel alignment.* |
| | Faulty strut (shock absorber) | *Replace strut (shock absorber).* |
| | Hard driving | *Replace tires.* |
| | Overloaded vehicle | *Replace tires.* |
| | Not rotated tires | *Replace or rotate tires.* |
| | Worn or loose wheel bearing | *Replace wheel bearing.* |
| | Wobbly wheel or tire | *Replace wheel or tire.* |
| | Tires not adequately inflated | *Adjust tire pressure.* |
| ***Wheel tramp*** | Blister or bump on tire | *Replace tire.* |
| | Improper strut (shock absorber) action | *Replace strut (shock absorber).* |
| ***Shimmy, shake or vibration*** | Tire or wheel out of balance | *Balance wheel or replace tire and/or wheel.* |
| | Loosen wheel bearings | *Replace wheel bearings.* |
| | Worn tie-rod ends | *Replace tie-rod ends.* |
| | Worn lower ball joints | *Replace front suspension control arm.* |
| | Excessive wheel runout | *Repair or replace wheel and/or tire.* |
| | Blister or bump on tire | *Replace tire.* |
| | Excessively loaded radial runout of tire / wheel assembly | *Replace tire or wheel.* |
| | Disturbed wheel alignment | *Check and adjust wheel alignment.* |
| | Loose or worn steering linkage | *Tighten or replace steering linkage.* |
| | Loose steering gear case bolts | *Tighten steering gear case bolts.* |
| ***Abnormal noise, front end*** | Worn, sticky or loose tie-rod ends, lower ball joints, tie-rod inside ball joints or drive shaft joints | *Replace tie-rod end, suspension arm, tie-rod or drive shaft joint.* |
| | Damaged struts or mountings | *Repair or replace struts or mountings.* |
| | Worn suspension arm bushings | *Replace suspension arm bushings.* |
| | Loose stabilizer bar | *Tighten bolts or nuts and/or replace bushes.* |
| | Loose wheel bolts | *Tighten wheel bolts.* |
| | Loose suspension bolts or nuts | *Tighten suspension bolts or nuts.* |
| | Broken or damaged wheel bearings | *Replace wheel bearings.* |
| | Broken suspension springs | *Replace suspension springs.* |
| | Poorly lubricated or worn strut bearings | *Replace strut bearing.* |
| | Malfunction of Power Steering System | *Check and correct malfunction.* |
| ***Low or uneven trim height*** | Broken or sagging coil springs | *Replace coil springs.* |
| ***NOTE*** | Over loaded | *Check loading.* |
| | Incorrect coil springs | *Replace coil spring.* |
| ***See NOTE *1.*** | Tires not adequately inflated | *Adjust tire pressure.* |
| ***Ride too soft*** | Faulty strut (shock absorber) | *Replace strut (shock absorber).* |
| ***Suspension bottoms*** | Overloaded | *Check loading.* |
| | Faulty strut (shock absorber) | *Replace strut (shock absorber).* |
| | Incorrect, broken or sagging coil springs | *Replace coil spring.* |

www.cargeek.ir

www.CarGeek.ir


| Condition | Possible cause | Correction / Reference Item |
|---|---|---|
| ***Body leans or sways in corners*** | Loose stabilizer bar | *Tighten stabilizer bar bolts or nuts, or replace bushes.* |
| | Faulty strut (shock absorber) or mounting | *Replace strut (shock absorber) or tighten mounting.* |
| | Broken or sagging coil springs | *Replace coil springs.* |
| | Overloaded | *Check loading.* |
| ***Cupped tires*** | Front struts defective | *Replace struts.* |
| | Worn wheel bearings | *Replace wheel bearings.* |
| | Excessive tire or wheel run-out | *Replace tire and/or wheel.* |
| | Worn ball joints | *Replace front suspension control arm.* |
| | Tire out of balance | *Adjust tire balance.* |

**NOTE**

***1: Right-to-left trim height ("H") difference should be within 15 mm (0.6 in.) with curb weight. (same with rear side.)**

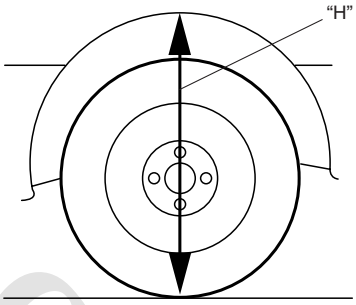


I2RH01210001-01

www.cargeek.ir

 www.CarGeek.ir

# Specifications

## Wheel Alignment Specifications

S5JB0A2107001

**Wheel alignment specifications**

| Item | | Front | Rear |
|---|---|---|---|
| Front and rear toe (“b” – “a”) (total) | | IN 0 ± 2.0 mm (0 ± 0.0787 in.) | IN 6.0 ± 2.0 mm (0.2362 ± 0.0787 in.) |
| Front camber (Non adjustable, for reference only) Rear camber “C” | | 0° 00’ ± 1° | –1° 15’ ± 15’ |
| Caster (Non adjustable, for reference only) | 3door model | 2° 40’ | — |
| | 5door model | 2° 30’ | — |
| Side Slip Limit mm/m (in./3.3 ft) | | IN 1.5 to out 1.5 (IN 0.0591 to out 0.0591) | IN 5.5 to IN 9.5 (IN 0.2166 to IN 0.3740) |
| Steering angle (Turning angle) | Inside | 37.0° ± 3° | — |
| | Outside | 32.0° ± 3° | — |

**NOTE**

**Toe value in the specifications table was measured by using a toe-in gauge.**

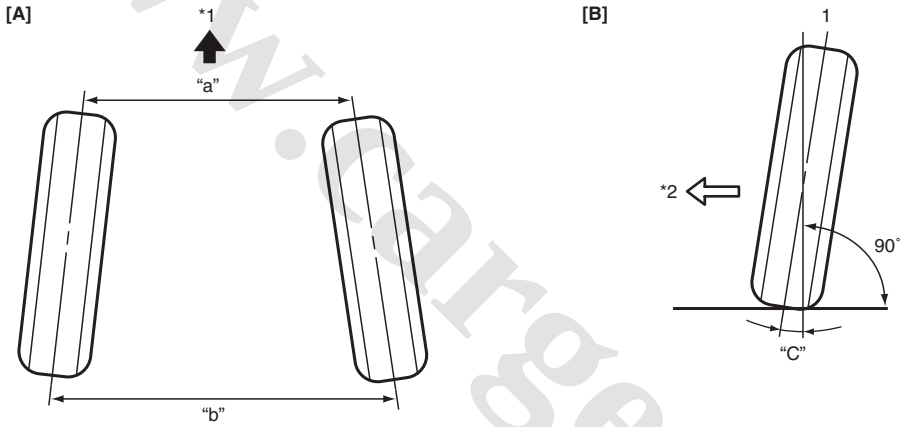


I5JB0A210001-01

| | | |
|---|---|---|
| [A]: Toe-in (Top view) | 1. Center line of wheel | *2. Body center |
| [B]: Camber (Front view) | *1. Forward | |

www.cargeek.ir

www.CarGeek.ir


# Front Suspension

## General Description

### Front Suspension Construction

S5JB0A2201001

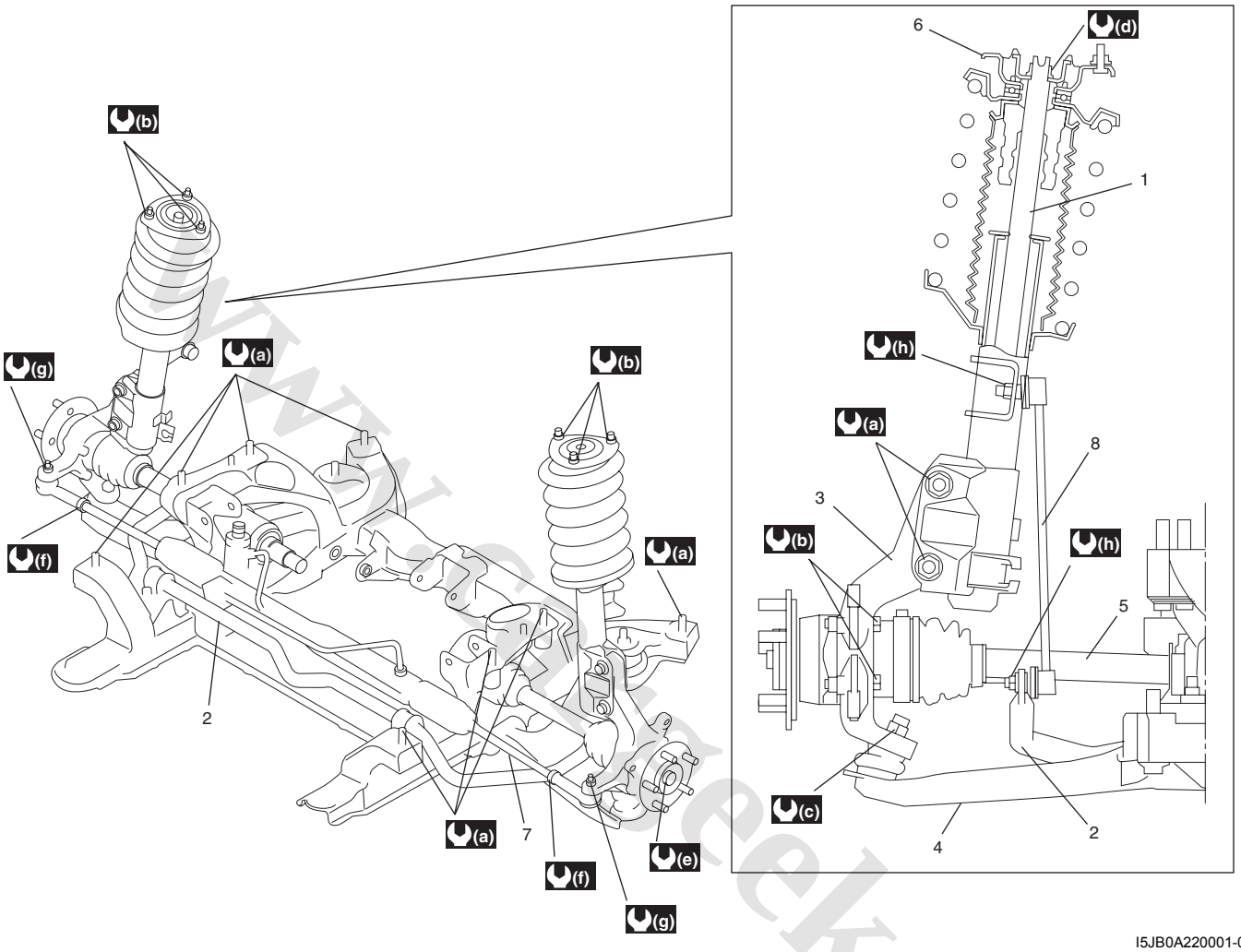


I5JB0A220001-02

| | | |
|---|---|---|
| 1. Front strut assembly | 7. Tie-rod | (e) : 200 N·m (20.0 kgf-m, 145.0 lb-ft) |
| 2. Stabilizer bar | 8. Stabilizer bar joint | (f) : 65 N·m (6.5 kgf-m, 47.0 lb-ft) |
| 3. Steering knuckle | (a) : 135 N·m (13.5 kgf-m, 98.0 lb-ft) | (g) : 43 N·m (4.3 kgf-m, 31.0 lb-ft) |
| 4. Suspension control arm | (b) : 50 N·m (5.0 kgf-m, 36.5 lb-ft) | (h) : 60 N·m (6.0 kgf-m, 43.5 lb-ft) |
| 5. Front drive shaft | (c) : 55 N·m (5.5 kgf-m, 40.0 lb-ft) | |
| 6. Vehicle body | (d) : 90 N·m (9.0 kgf-m, 65.0 lb-ft) | |

www.cargeek.ir

www.CarGeek.ir

## Front Wheel Alignment Construction

S5JB0A2201002

Among factors for front wheel alignment, only toe setting can be adjusted. Camber and caster are not adjustable. Therefore, should camber or caster be out of specification due to the damage caused by hazardous road conditions or collision, whether the damage is in body or in suspension should be determined and damaged body should be repaired or damaged suspension should be replaced.

### Preliminary Checks Prior to Adjustment Front Wheel Alignment

Steering and vibration complaints are not always the result of improper wheel alignment. An additional item to be checked is the possibility of tire lead due to worn or improperly manufactured tires. “Lead” is the vehicle deviation from a straight path on a level road without hand pressure on the steering wheel. Refer to “Radial Tire Lead / Pull Description:  in Section 2D” in order to determine if the vehicle has a tire lead problem. Before making any adjustment affecting wheel alignment, the following checks and inspections should be made to ensure correctness of alignment readings and alignment adjustments:

- Check all tires for proper inflation pressures and approximately the same tread wear.
- Check for loose of ball joints. Check tie-rod ends; if excessive looseness is noted, it must be corrected before adjusting.
- Check for run-out of wheels and tires.
- Check vehicle trim heights; if it is out of limit and a correction is needed, it must be done before adjusting toe.
- Check for loose of suspension control arms.
- Check for loose or missing stabilizer bar attachments.
- Consideration must be given to excess loads, such as tool boxes. If this excess load is normally carried in vehicle, it should remain in vehicle during alignment checks.
- Consider condition of equipment being used to check alignment and follow manufacturer’s instructions.
- Regardless of equipment used to check alignment, vehicle must be placed on a level surface.

**NOTE**

**To prevent possible incorrect reading of toe, camber or caster, vehicle front and rear end must be moved up and down a few times before inspection.**

# Repair Instructions

## Front Wheel Alignment Inspection and Adjustment

S5JB0A2206001

### Toe Inspection and Adjustment

Preparation for toe inspection and adjustment.

- Place vehicle in unloaded state on level surface.
- Set steering wheel in straight state.
- Check that inflation pressure of each tire is adjusted properly and wheel is free from deflection.
- Check that each suspension part is free from bend, dent, wear or damage in any other form.
- Check that ground clearance at the right and left is just about the same.

### Inspection

Measure toe with toe-in gauge (1).
Toe should be within following specifications.
If toe is out of the specification, adjust toe properly.

**Toe**
**IN 0 ± 2.0 mm (0 ± 0.0787 in.)**

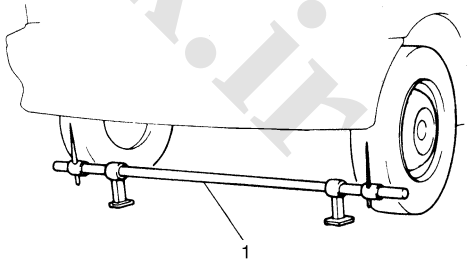


I2RH01220062-01

www.cargeek.ir

www.CarGeek.ir


### Adjustment

1) Loosen right and left tie-rod end lock nuts (1) first.
2) Rotate right and left tie-rods (2) by the same amount to align toe to specification. In this adjustment, the lengths “A” of both right and left tie-rod should be equal.

**NOTE**

**Before rotating tie-rods (2), apply grease between tie-rods and rack boots so that boots won’t be twisted.**

3) After adjustment, tighten lock nuts (1) to specified torque.

**Tightening torque**
**Tie-rod end lock nut (a): 65 N·m (6.5 kgf-m, 47.0 lb-ft)**

**NOTE**

**Make sure that rack boots are not twisted.**

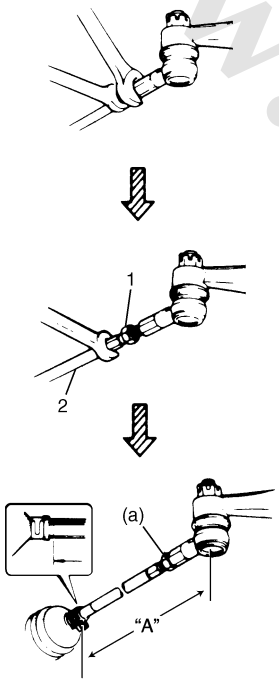


I5JB0A220002-01

### Steering Angle Check and Adjustment

When tie-rod or tie-rod end was replaced, check toe and then also steering angle with turning radius gauge (1). If steering angle is not correct, check whether right and left tie-rods length “A” are equal.

**NOTE**

**If tie-rod lengths were changed to adjust steering angle, reinspect toe-in.**

**Steering angle**
**Inside: 37.0° ± 3°**
**Outside: 32.0° ± 3°**

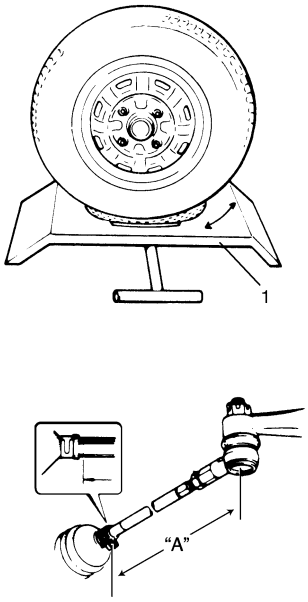


I5JB0A220003-01

### Reference Information

**Side slip**
When checked with side slip tester, side slip should satisfy following specification.

**Side slip**
**IN 1.5 to OUT 1.5 (IN 0.0591 to OUT 0.0591)**

If side slip exceeds the limit, toe or front wheel alignment may not be correct.

www.cargeek.ir

www.CarGeek.ir

## Front Strut Assembly Components

S5JB0A2206002

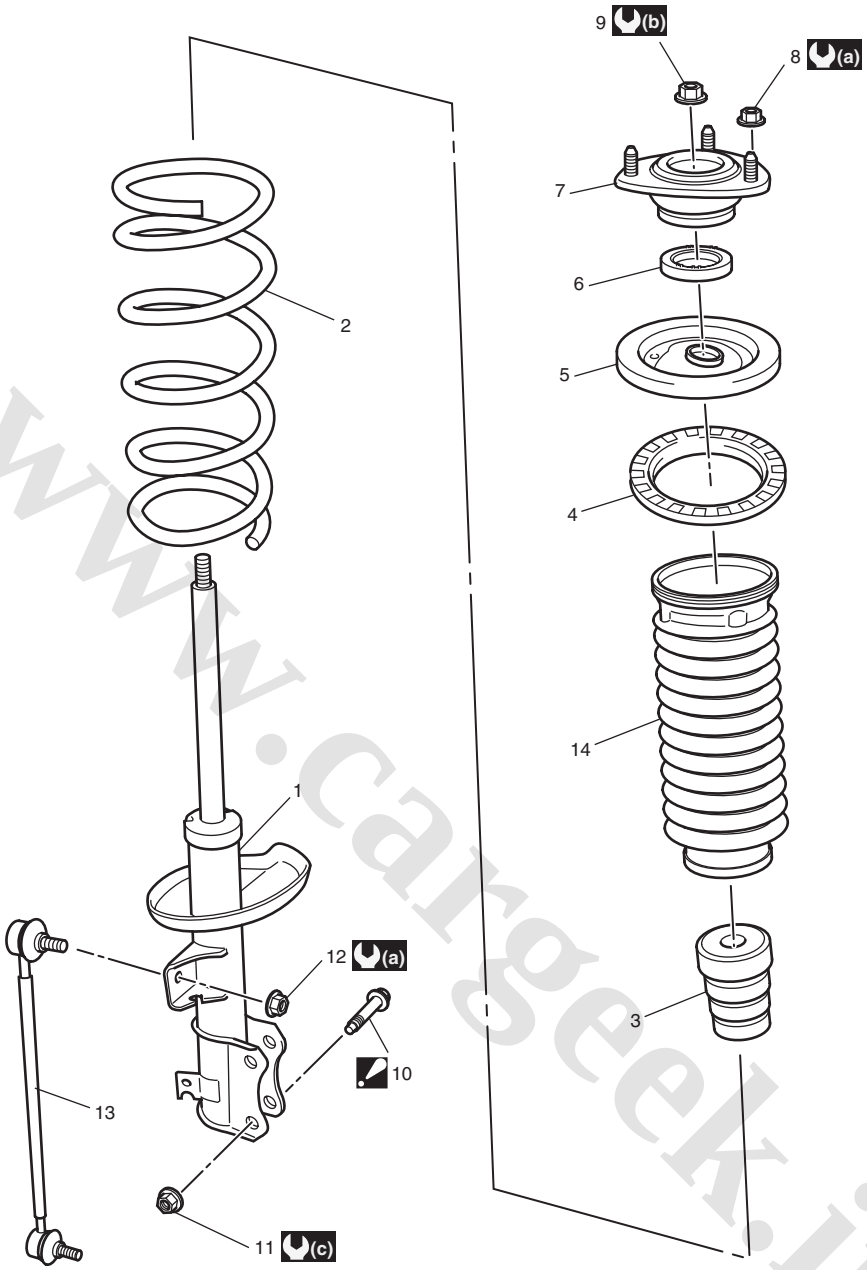


I5JB0A220004-01

| | | |
|---|---|---|
| 1. Strut assembly | 7. Strut support | 13. Stabilizer joint |
| 2. Coil spring | 8. Strut support nut | 14. Strut dust cover |
| 3. Bump stopper | 9. Strut nut | (a) : 50 N·m (5.0 kgf-m, 36.5 lb-ft) |
| 4. Coil spring seat | 10. Strut bracket bolt<br>: Insert from vehicle front side.<br>: If reuse bolt, apply engine oil to thread, bearing and trunk surface. | (b) : 90 N·m (9.0 kgf-m, 65.0 lb-ft) |
| 5. Coil spring upper seat | 11. Strut bracket nut<br>: If reuse nut, apply engine oil to thread and bearing. | (c) : 135 N·m (13.5 kgf-m, 98.0 lb-ft) |
| 6. Strut bearing | 12. Stabilizer joint nut | (d) : 60 N·m (6.0 kgf-m, 43.5 lb-ft) |

www.cargeek.ir

www.CarGeek.ir


## Front Strut Assembly Removal and Installation

S5JB0A2206003

### Removal

**NOTE**

**When servicing component parts of strut assembly, remove strut rod cap and then loosen strut nut a little before removing strut assembly. This will make service work easier. Note that the nut must not be removed at this point.**

1) Hoist vehicle, allowing front suspension to hang free.
2) Remove wheel and disconnect stabilizer joint (1) from strut bracket.
   When loosening joint nut, hold stud with hexagon wrench.

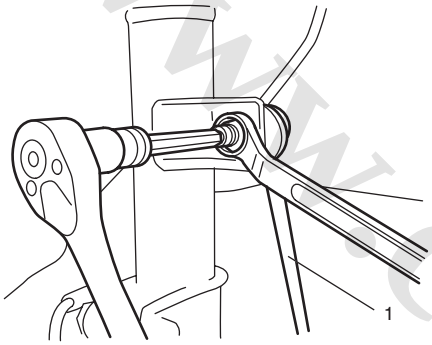


I5JB0A220005-02

3) Remove brake hose mounting bolt (1) and remove brake hose (2) from bracket.
4) Disconnect front height sensor (if equipped) from suspension control arm for left side referring to “Height Sensor Removal and Installation (If Equipped): in Section 9B”.
5) Remove front wheel speed sensor harness clamp bolt (3) (if equipped) and then detach front speed sensor harness (5) from strut bracket as shown in figure.
6) Remove strut bracket bolts and nuts (4).

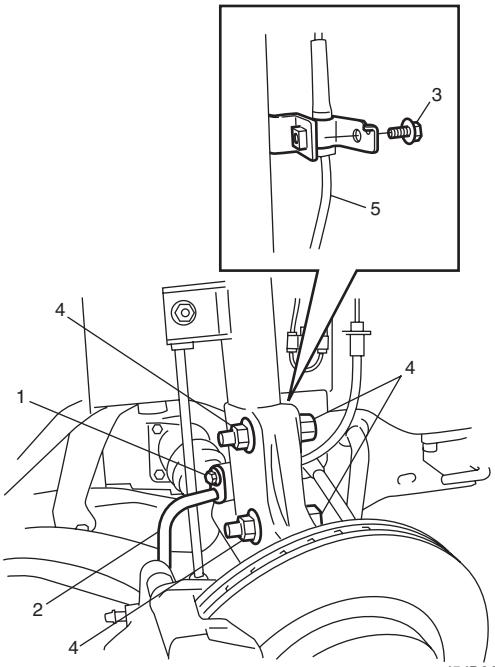


I5JB0A220006-01

7) Remove strut support nuts (1).

**NOTE**

**Hold strut by hand so that it will not fall off.**

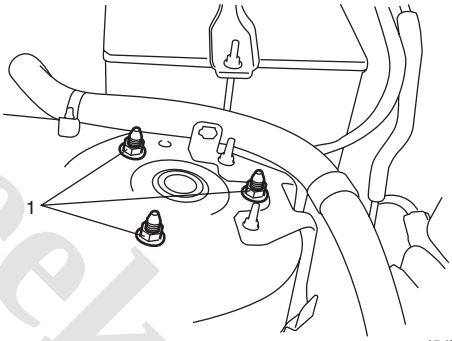


I5JB0A220007-01

8) Remove strut assembly.

www.cargeek.ir

www.CarGeek.ir

**Installation**

Install strut assembly by reversing removal procedure, noting the following instructions.

- Insert bolts in such direction as shown in figure.
- Tighten all fasteners to specified torque.

  **Tightening torque**
  **Strut bracket nut (a): 135 N·m (13.5 kgf-m, 98.0 lb-ft)**
  **Brake hose mounting bolt (c): 25 N·m (2.5 kgf-m, 18.0 lb-ft)**
  **Stabilizer joint nut (d): 60 N·m (6.0 kgf-m, 43.5 lb-ft)**
  **Front wheel speed sensor harness clamp bolt (e): 10 N·m (1.0 kgf-m, 7.5 lb-ft)**

- Lower hoist and vehicle in unloaded condition, tighten strut support nuts (b) to specified torque.

  **Tightening torque**
  **Strut support nut (b): 50 N·m (5.0 kgf-m, 36.5 lb-ft)**

**⚠ CAUTION**

**If reuse strut bracket bolt and nut, apply engine oil to thread, bearing and trunk surface.**

**NOTE**

- **Don't twist brake hose and ABS wheel speed sensor harness (if equipped) when installing them.**
- **Insert strut bracket bolt from vehicle forward.**

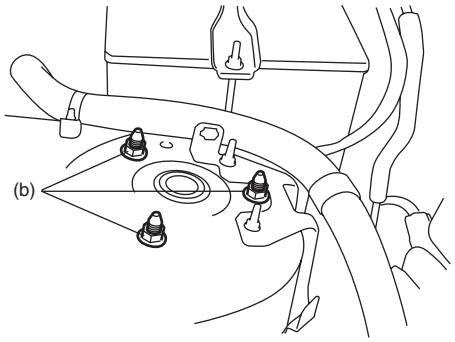


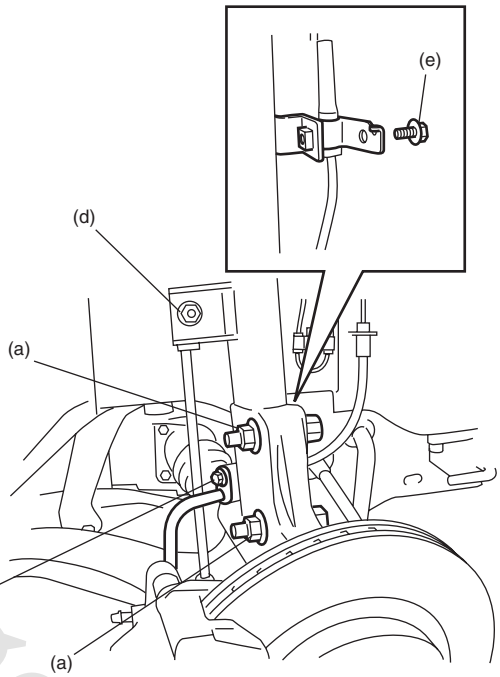


I5JB0A220008-01

- Tighten wheel nuts to specified torque.

  **Tightening torque**
  **Wheel nut: 100 N·m (10.0 kgf-m, 72.5 lb-ft)**

- After installation, confirm front wheel alignment and adjust headlight auto leveling system referring to "Initialization of Auto Leveling Headlight System: in Section 9B".

www.cargeek.ir

www.CarGeek.ir


## Front Strut Assembly Disassembly and Assembly

S5JB0A2206004

### Disassembly

1) Attach special tool (A) to coil spring as shown. Turn special tool bolts alternately until coil spring tension is released. Rotate the strut around its axis to confirm that the coil spring is released or not.

**Special tool**
**(A): 09943–25010**

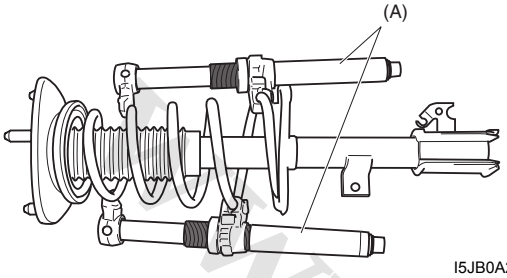


I5JB0A220059-01

**⚠ WARNING**

**Use a regular coil spring compressor and follow the operation procedure described in the Instruction Manual.**

2) While keeping coil spring compressed, remove strut nut with special tools as shown.

**Special tool**
**(A): 09900–00411**
**(B): 09900–00414**
**(C): 09941–56510**

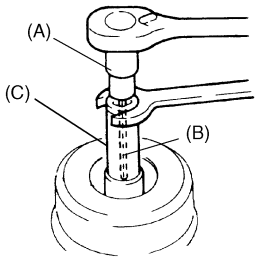


I5JB0A220060-01

3) Disassemble strut assembly.

### Assembly

For assembly, reverse disassembly procedure, noting the following instructions.

1) Compress coil spring with special tool (A) until total length becomes about 310 mm (12.2 in.) as shown.

**Length**
**“a”: 310 mm (12.2 in.)**

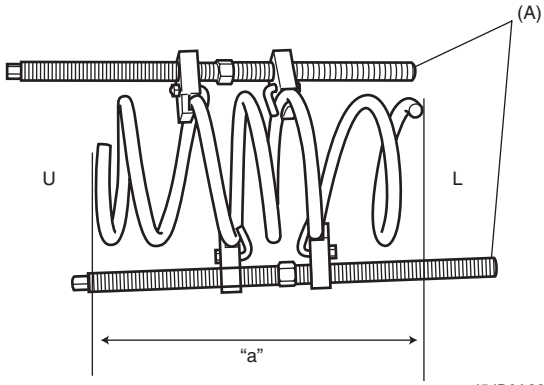


I5JB0A220010-01

| | |
|---|---|
| U: | Upper side (small dia.) |
| L: | Lower side (large dia.) |

2) Install bump stopper onto strut rod. For installing direction, refer to the figure in “Front Strut Assembly Components: ”.
3) Install compressed coil spring to strut, and place coil spring end (2) onto spring lower seat (1) as shown.

**NOTE**

**End of coil spring must not interfere with step of spring lower seat.**

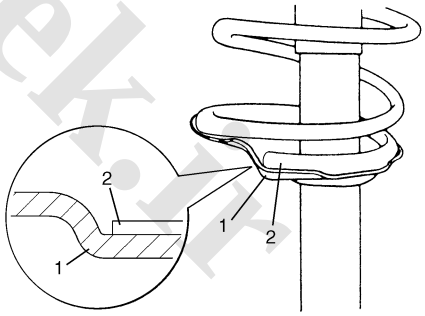


I4RS0A220011-01

www.cargeek.ir

www.CarGeek.ir

4) Pull strut rod as far up as possible and use care not to allow it to retract into strut.
5) Attach coil spring seat to coil spring upper seat and then install strut dust cover firmly.
6) Install coil spring upper seat with strut dust cover on coil spring and then spring upper seat (1) aligning "OUT" mark (3) on spring upper seat and center of strut bracket (2).

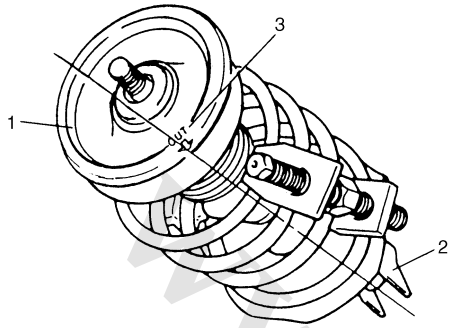

I2RH01220019-01

7) Install bearing (3), strut support (2) and strut nut (1) in this sequence.
Tighten strut nut (1) holding stud with special tools.

**Special tool**
**(A): 09900–00411**
**(B): 09900–00414**
**(C): 09941–56510**

**Tightening torque**
**Strut nut (a): 90 N·m (9.0 kgf-m, 65.0 lb-ft)**

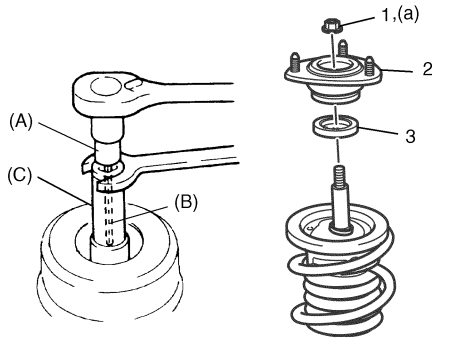

I5JB0A220011-03

## Front Strut Assembly Check

S5JB0A2206005

- Inspect strut for oil leakage, damage or deformation. If defect is found, replace strut as an assembly unit, because it can not be disassembled.

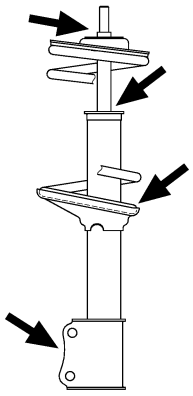
I4RS0A220014-01

- Inspect strut function referring to the following procedures:
  1) Check and adjust tire pressures as specified.
  2) Bounce vehicle body up and down 3 or 4 times continuously by pushing front end of the vehicle side body to check strut.
     Also, note how many times vehicle body rebounds to stop after force application.
  3) Repeat the same procedure to the other strut to confirm that the both side struts equally respond.

If conditions of struts are in doubt, compare them with known-good vehicle or strut.

- Inspect bearing for wear, abnormal noise or gripping. If defective, replace.
- Inspect coil spring seat for cracks or deformation. If defective, replace.
- Inspect bump stopper for deterioration. If defective, replace.
- Inspect rebound stopper and strut mount for wear, cracks or deformation. If defective, replace.

www.cargeek.ir

www.CarGeek.ir


## Front Wheel Hub Assembly and Steering Knuckle Components

S5JB0A2206006

**⚠ CAUTION**

**Never disassemble front wheel hub assembly. Disassembly will spoil its original function. If faulty condition is found, replace it with new one.**

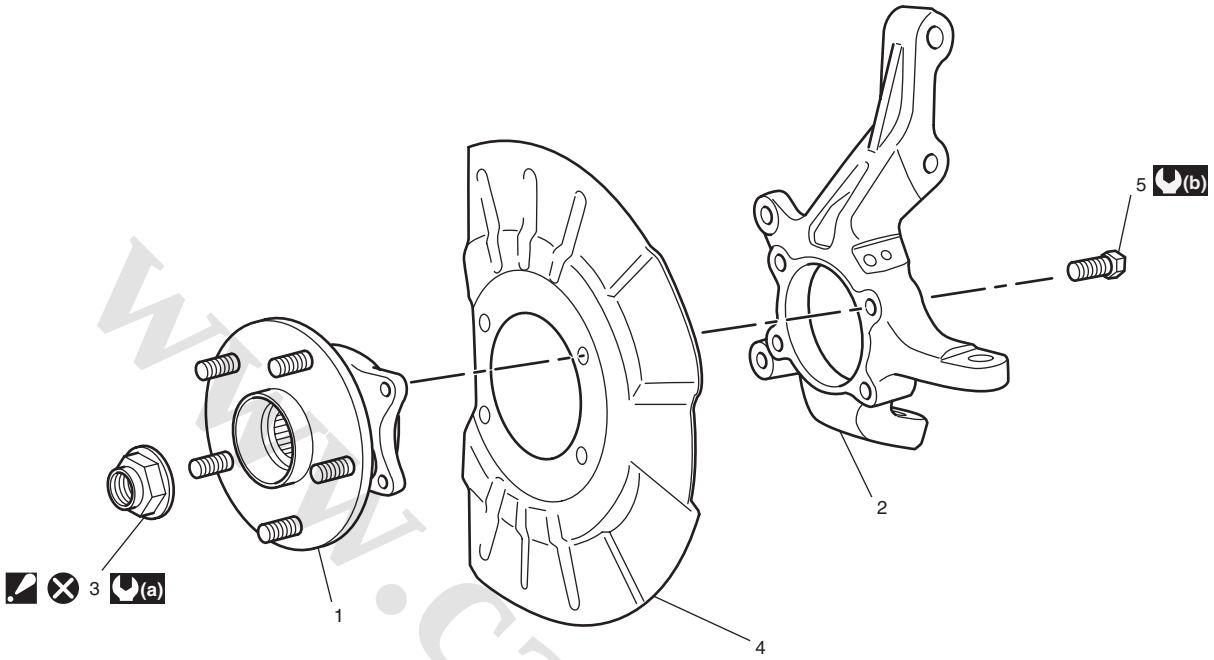


I5JB0A220012-01

| | | |
|---|---|---|
| 1. Front wheel hub assembly | 4. Dust cover | (b) : 50 N·m (5.0 kgf-m, 36.0 lb-ft) |
| 2. Steering knuckle | 5. Wheel hub housing bolt | ⊗ : Do not reuse. |
| 3. Drive shaft nut<br>: Calk, after tightening. | (a) : 200 N·m (20.0 kgf-m, 145.0 lb-ft) | |

## Front Wheel Hub Assembly Removal and Installation

S5JB0A2206007

**⚠ CAUTION**

**Never disassemble front wheel hub assembly. Disassembly will spoil its original function. If faulty condition is found, replace it with new one.**

### Removal

1) Hoist vehicle and remove wheel.
2) Uncaulk drive shaft nut (1).
3) Depress foot brake pedal and hold it. Remove drive haft nut (1).

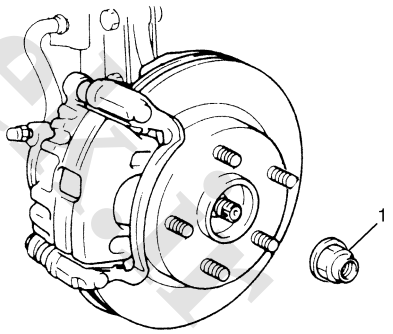


I5JB0A220013-01

4) Remove caliper (1) with carrier.

**NOTE**

**Hang removed caliper with a wire hook or the like (3) so as to prevent brake hose (4) from bending, twisting or tension.Do not depress brake pedal during pads removal.**
**Do not operate brake pedal with pads removed.**

www.cargeek.ir

www.CarGeek.ir

5) Pull brake disc (2) off by using two 8 mm bolts.

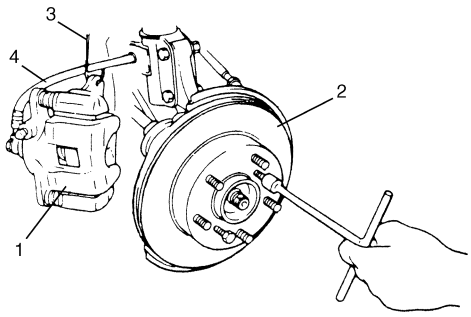

I5JB0A220014-01

6) Remove wheel hub housing bolts (3), and then remove wheel hub assembly (1) and dust cover (2).

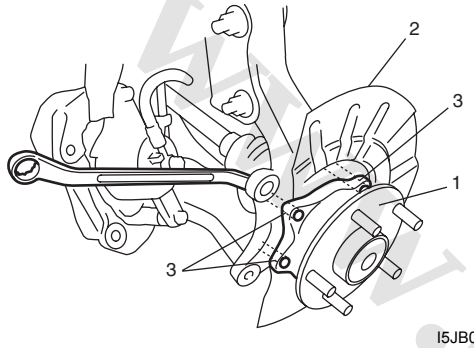

I5JB0A220015-01

7) Remove hub bolts (1) with copper hammer or hydraulic press.

**⚠ CAUTION**

**Never remove bolt unless replacement is necessary.**
**Be sure to use a new bolt for replacement.**

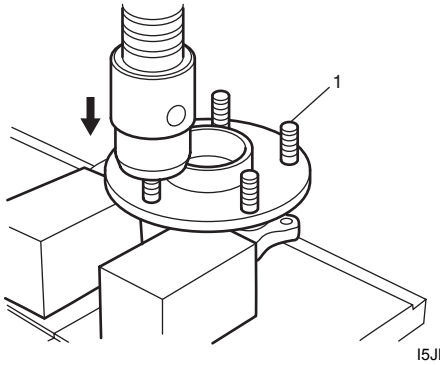

I5JB0A220016-01

**Installation**

1) Insert new hub bolt (1) in hub hole. Rotate hub bolt slowly to assure that serrations are aligned with those made by original bolt.

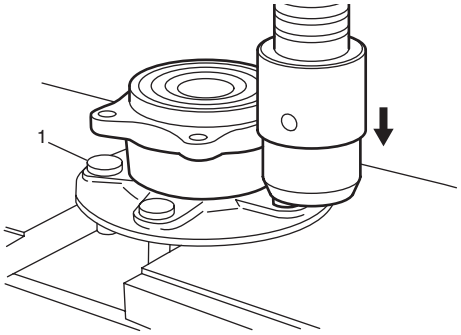

I5JB0A220017-01

2) Apply grease to end face of inner ring (2) before front wheel nub (1) installation.

**⚠ CAUTION**

**Do not apply the grease to the encoder section to avoid the encoder malfunction.**

**"A": Grease 99000–25010 (SUZUKI Super Grease A)**

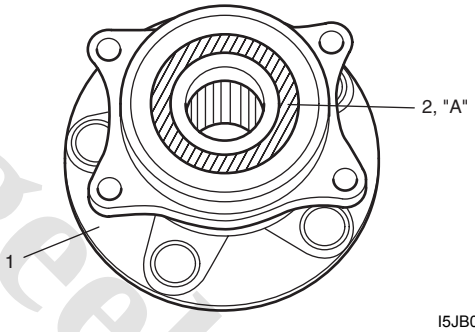

I5JB0A220018-01

3) Install wheel hub (1) and dust cover (2) to steering knuckle.

4) Tighten wheel hub housing bolts (3) to specified torque

**Tightening torque**
**Wheel hub housing bolt (a): 50 N·m (5.0 kgf-m, 36.5 lb-ft)**

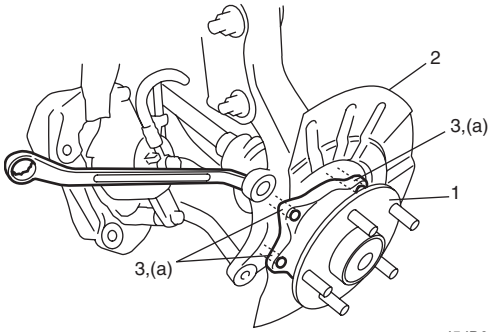

I5JB0A220019-01

www.cargeek.ir

www.CarGeek.ir


5) Install brake disk and brake caliper.
6) Tighten caliper carrier bolt to specified torque.

**Tightening torque**
**Caliper carrier bolt: 85 N·m (8.5 kgf-m, 61.5 lb-ft)**

7) Depress foot brake pedal and hold it there. Tighten new drive shaft nut (1) to specified torque.

**Tightening torque**
**Drive shaft nut (a): 200 N·m (20.0 kgf-m, 145.0 lb-ft)**

**⚠ CAUTION**

**Never reuse drive shaft nut (1).**

8) Caulk drive shaft nut (1) as shown.

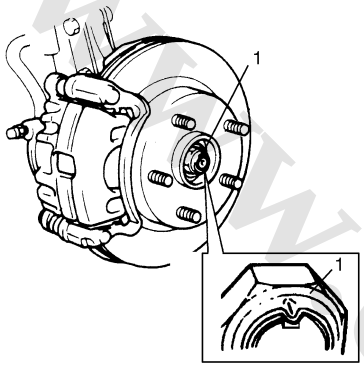

I5JB0A220021-01

9) Tightening wheel nuts to specified torque.

**Tightening torque**
**Wheel nut: 100 N·m (10.0 kgf-m, 72.5 lb-ft)**

## Steering Knuckle Removal and Installation

S5JB0A2206019

### Removal

1) Hoist vehicle and remove wheel.
2) Remove Front wheel hub assembly referring to “Front Wheel Hub Assembly Removal and Installation: ”.
3) Disconnect tie-rod end (1) from steering knuckle (2) with puller (3).

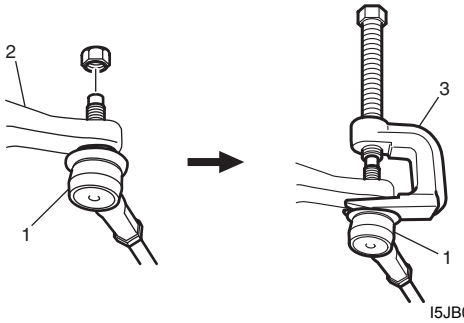

I5JB0A220020-01

4) Disconnect front height sensor (if equipped) from suspension control arm for left side referring to “Height Sensor Removal and Installation (If Equipped): in Section 9B”.
5) Remove front wheel speed sensor (1) from knuckle (if ABS equipped).
6) Loosen ball joint nut (2).

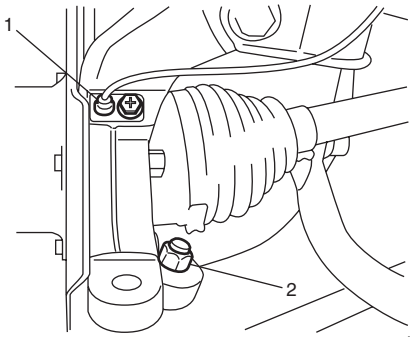

I5JB0A220022-01

7) Remove strut bracket bolts (2) and nuts (1).

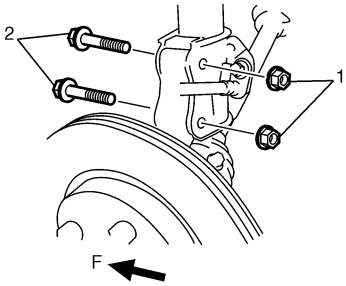

I5JB0A220023-01

F: Forward

8) Disconnect ball joint from steering knuckle (2) with puller and then remove steering knuckle (2).

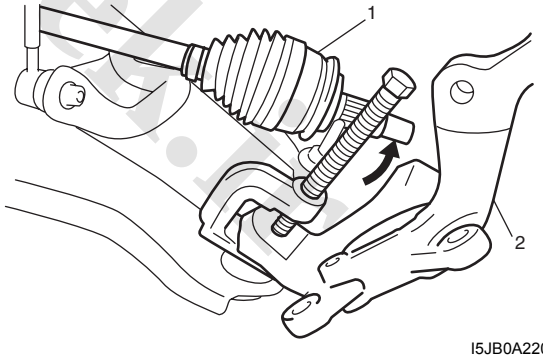

I5JB0A220024-01

www.cargeek.ir

www.CarGeek.ir

**Installation**

For installation, reverse removal procedure, noting the following instructions.

1) Connect steering knuckle to suspension arm.
2) Install strut bracket bolts (2) and nuts (1).
3) Tighten strut bracket nuts (1) to specified torque.

**Tightening torque**
**Strut bracket nut (a): 135 N·m (13.5 kgf-m, 98.0 lb-ft)**

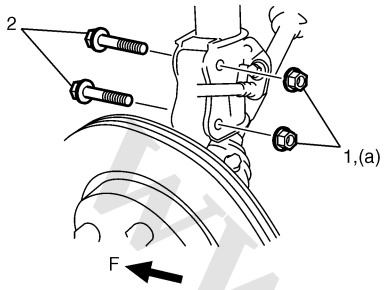


I5JB0A220025-01

F: Forward

4) Tighten new suspension arm ball joint nut (1) to specified torque.

**⚠ CAUTION**

**Never reuse the removed suspension arm ball joint nut.**

**Tightening torque**
**Suspension arm ball joint nut (a): 55 N·m (5.5 kgf-m, 40.0 lb-ft)**

5) Install ABS wheel speed sensor (2) (if ABS equipped) and tighten front wheel speed sensor bolt (3).

**Tightening torque**
**Front wheel speed sensor bolt (b): 10 N·m (1.0 kgf-m, 7.5 lb-ft)**

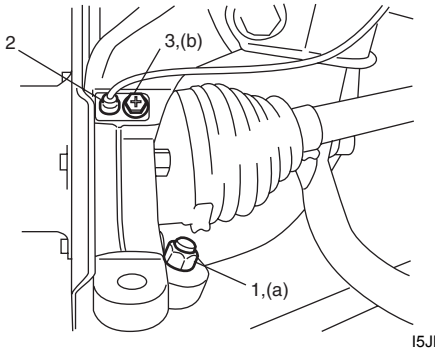


I5JB0A220026-01

6) Connect front height sensor (if equipped) to suspension control arm for left side referring to “Height Sensor Removal and Installation (If Equipped): in Section 9B”.
7) Connect tie-rod end (1) to steering knuckle (2), tighten new nut (3) to specified torque.

**Tightening torque**
**Tie-rod end nut (a): 45 N·m (4.5 kgf-m, 32.5 lb-ft)**

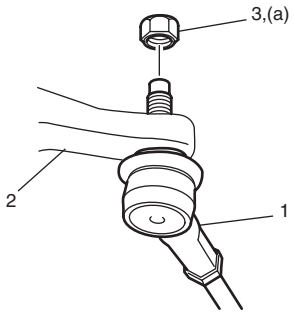


I5JB0A220028-01

8) Install front wheel hub assembly and dust cover to steering knuckle referring to “Front Wheel Hub Assembly Removal and Installation: ”.
9) Check front wheel alignment adjust it as necessary. For check and adjustment procedures, refer to “Front Wheel Alignment Inspection and Adjustment: ”.
10) Adjust headlight auto leveling system, refer to “Initialization of Auto Leveling Headlight System: in Section 9B”.

## Front Wheel Hub, Disc, Nut and Bearing Check

S5JB0A2206008

- Inspect each wheel disc for dents, distortion and cracks.
  A disc in badly damaged condition must be replaced.
- Check rust of installation face inside of wheel disc. As rust affects adversely, remove it thoroughly.
- Check tightness of wheel nuts and, if necessary, retighten them to specified torque.

**Tightening torque**
**Wheel nut (a): 100 N·m (10.0 kgf-m, 72.5 lb-ft)**

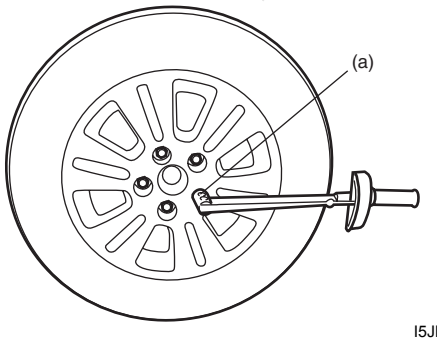


I5JB0A220029-01

www.cargeek.ir

www.CarGeek.ir


- Check wear of wheel bearing. When measuring thrust play, apply a dial gauge to wheel hub as shown in figure.

  **Thrust play limit**
  **0.1 mm (0.004 in.)**

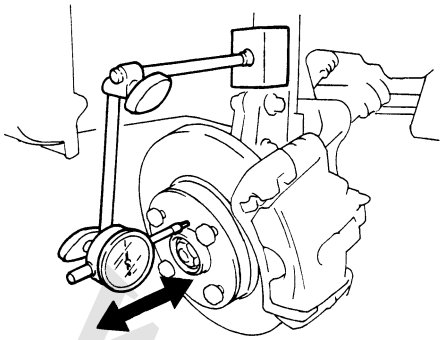

I3RM0A220034-01

- Check wheel bearing noise and smooth wheel rotation by rotating wheel in figure.
  If defective, replace bearing.

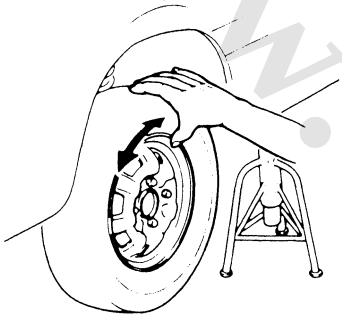

I2RH01220011-01

## Suspension Control Arm Removal and Installation

S5JB0A2206009

### Removal

1) Hoist vehicle and remove wheel.
2) Detach front height sensor (if equipped) from suspension control arm for left side referring to “Height Sensor Removal and Installation (If Equipped): in Section 9B”.
3) Uncaulk drive shaft nut (1).
4) Depress foot brake pedal and hold it. Remove drive shaft nut (1).

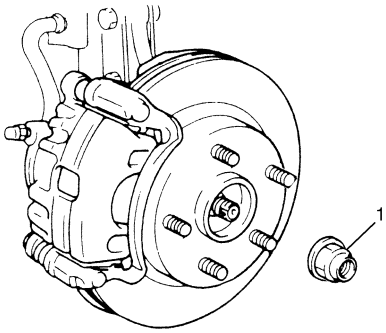


I5JB0A220013-01

5) Disconnect tie-rod end (1) from steering knuckle (2) with puller (3).

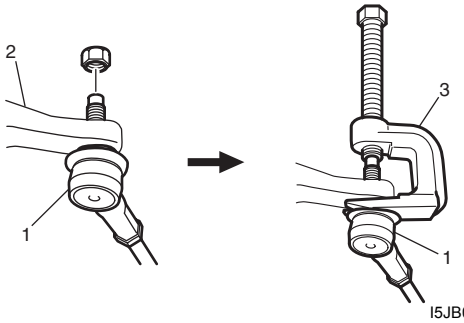


I5JB0A220020-01

6) Loosen ball joint nut (1).

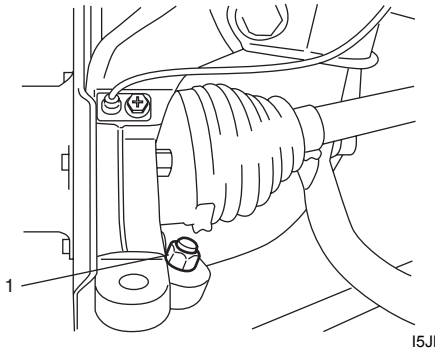


I5JB0A220030-01

7) Remove suspension control arm bolts (1).

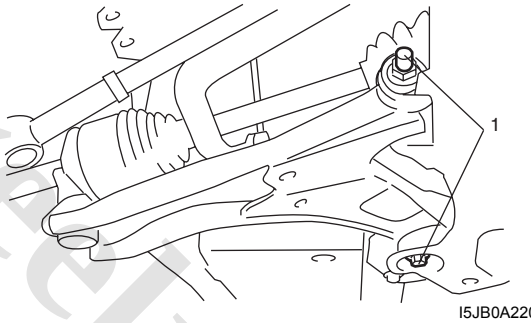


I5JB0A220031-01

8) Disconnect ball joint from steering knuckle (2) with puller and then remove suspension control arm (2).

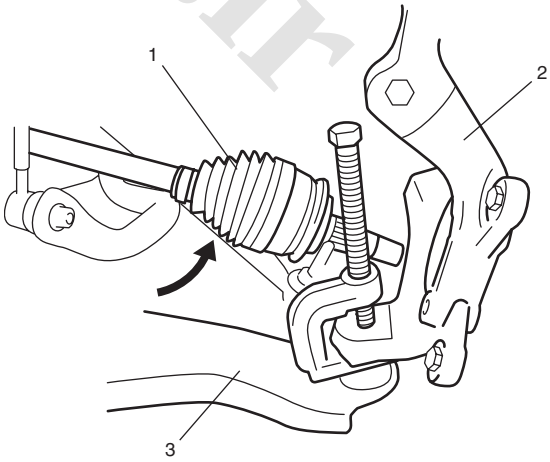


I5JB0A220032-01

www.cargeek.ir

www.CarGeek.ir

### Installation

1) Install suspension control arm bolts (1) and tighten suspension control arm nuts (2) temporarily by hand.

**⚠ CAUTION**

**If reuse suspension control arm nut, apply engine oil to thread and bearing.**

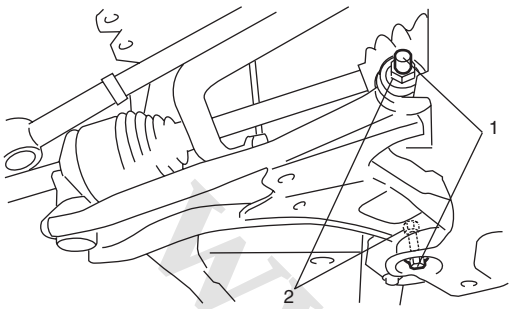

I5JB0A220033-01

2) Connect suspension control arm (1) to steering knuckle and then tighten new suspension control arm ball joint nut (2) to specified torque.

**⚠ CAUTION**

**Never reuse the removed suspension control arm ball joint nut.**

**Tightening torque**
**Suspension control arm ball joint nut (a): 55 N·m (5.5 kgf-m, 40.0 lb-ft)**

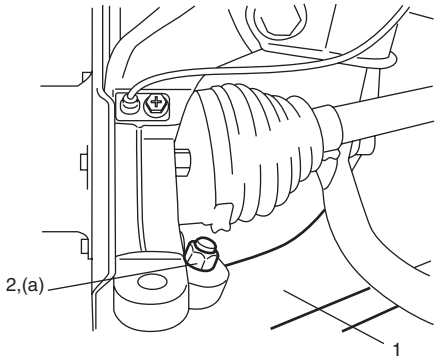

I5JB0A220034-02

3) Connect tie-rod end (1) to steering knuckle (2) and then tighten new nut (3) to specified torque.

**⚠ CAUTION**

**Never reuse the removed tie-rod end nut.**

**Tightening torque**
**Tie-rod end nut (a): 45 N·m (4.5 kgf-m, 32.5 lb-ft)**

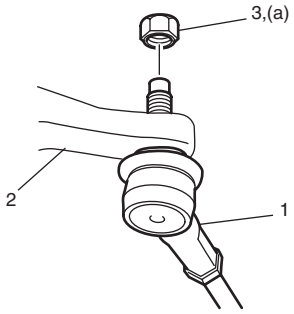

I5JB0A220028-01

4) Depress foot brake pedal and hold it there. Tighten new drive shaft nut (1) to specified torque.

**Tightening torque**
**Drive shaft nut (a): 200 N·m (20.0 kgf-m, 145.0 lb-ft)**

**⚠ CAUTION**

**Never reuse drive shaft nut (1).**

5) Caulk drive shaft nut (1) as shown.

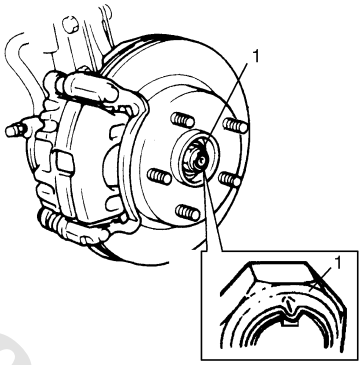

I5JB0A220021-01

6) Connect front height sensor (if equipped) to suspension control arm for left side referring to “Height Sensor Removal and Installation (If Equipped): in Section 9B”.
7) Install wheel and lower vehicle.
8) Tighten wheel nuts to specified torque.

**Tightening torque**
**Wheel nut: 100 N·m (10.0 kgf-m, 72.5 lb-ft)**

9) Tighten suspension control arm nuts to specified torque with vehicle weight on suspension.

**⚠ CAUTION**

**It is the most desirable to have vehicle off hoist and in non-loaded condition when tightening them.**

**Tightening torque**
**Suspension control arm nut: 45 N·m (4.5 kgf-m, 32.5 lb-ft)**

www.cargeek.ir

www.CarGeek.ir


## Suspension Control Arm / Bushing Disassembly and Assembly

S5JB0A2206010

### Disassembly

1) Remove rubber stopper (1).
2) Cut rubber (2) of flange of suspension control arm front bushing.
3) Using grinder (3), grind off flange (4) of front bushing.

**⚠ CAUTION**

**Be careful not to damage suspension control arm (5) when grinding flange (4) of front bushing with grinder.**

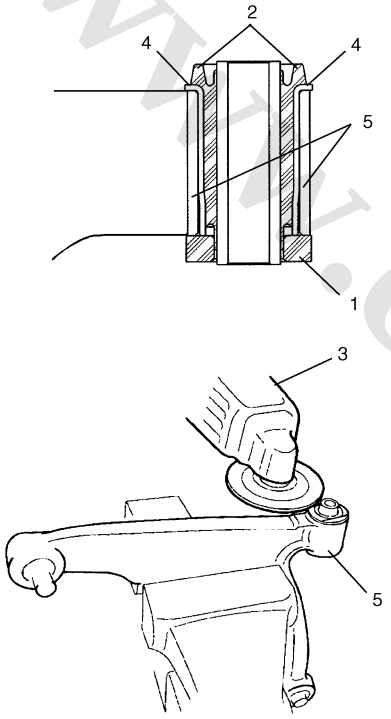


I5JB0A220027-02

4) Push out bushing by using hydraulic press (2) and special tools.

**Special tool**
**(A): 09945–55410**
**(B): 09913–75821**

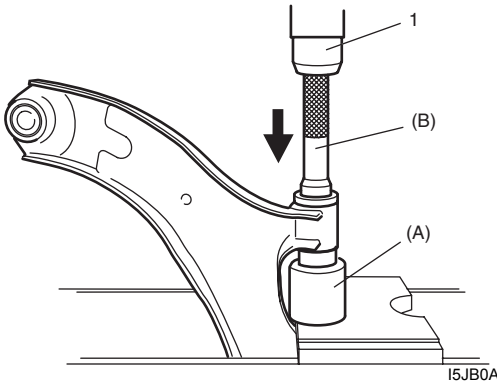


I5JB0A220035-01

### Assembly

**⚠ CAUTION**

**Apply grease (included in the repair kit) to ball joint and inside of ball stud boot when the ball stud boot is replaced.**

1) Front bushing
Press-fit front bushing (1) by using special tools and press (2).

**Special tool**
**(A): 09945–55410**
**(B): 09913–75821**

**⚠ CAUTION**

**Be sure to use new bushing.**

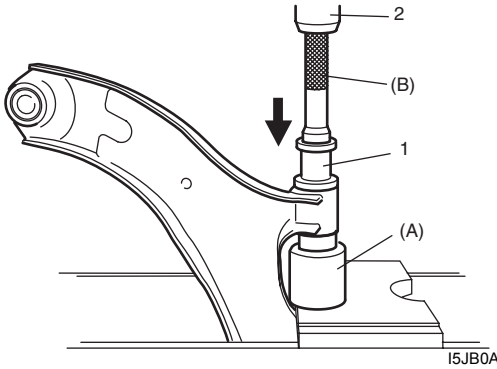


I5JB0A220036-01

2) Install rubber stopper (1).

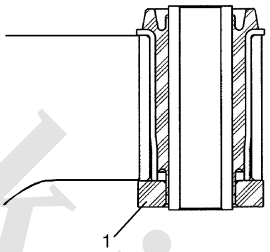


I5JB0A220037-01

www.cargeek.ir

www.CarGeek.ir

## Suspension Control Arm / Steering Knuckle Check

S5JB0A2206011

Inspect for cracks, deformation or damage.
If defective, replace.

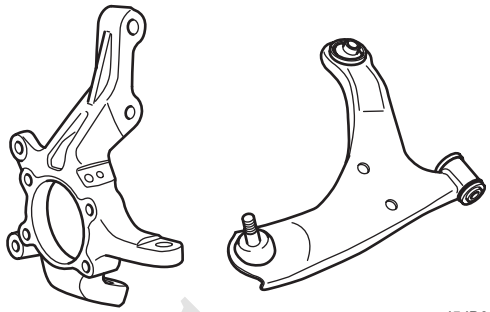

I5JB0A220038-01

## Suspension Control Arm Bushing Check

S5JB0A2206012

Inspect for damage, wear or deterioration.
If defective, replace.

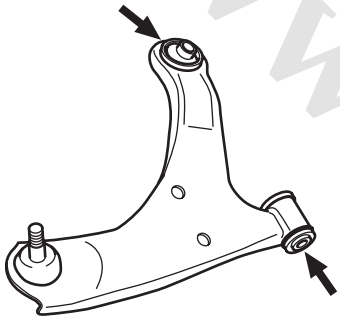

I5JB0A220039-01

## Suspension Control Arm Joint Check

S5JB0A2206013

- Check smooth rotation of ball stud.
- Check damages of ball stud.
- Check damages of dust cover.

**NOTE**

**Suspension control arm and arm joint cannot be separated.**

If there is any damage to either parts, control arm assembly must be replaced as a complete unit.

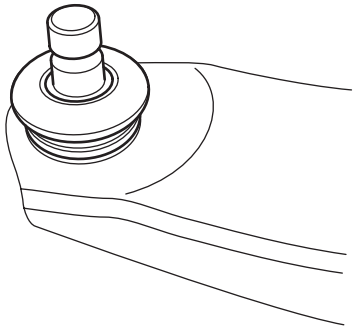

I4RS0B220023-01

www.cargeek.ir

www.cargeek.ir

www.CarGeek.ir


## Front Suspension Frame, Stabilizer Bar and/or Bushings Components

S5JB0A2206014

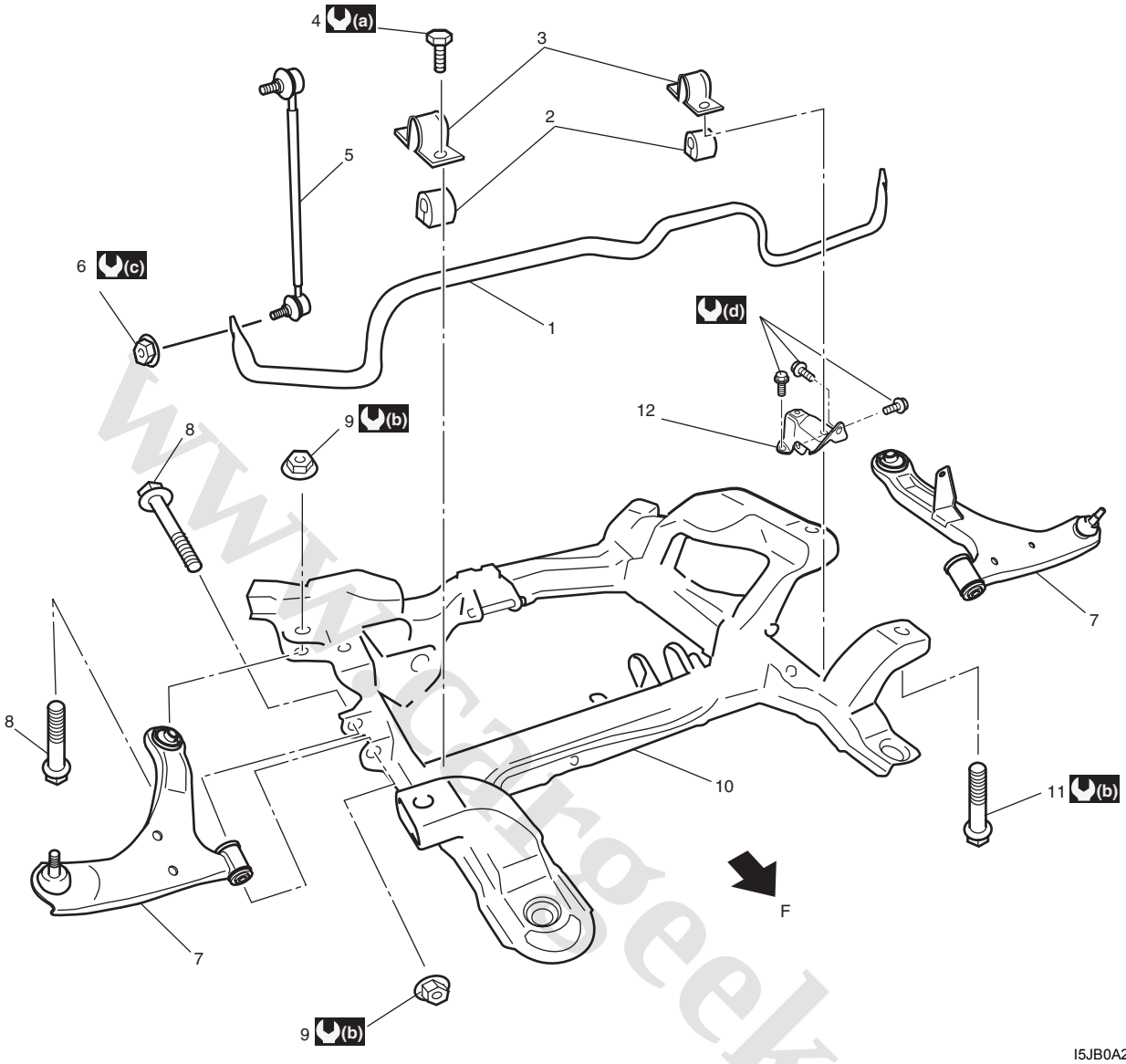


I5JB0A220040-02

| | | |
|---|---|---|
| F: Forward | 6. Stabilizer joint nut | 12. Stabilizer mount |
| 1. Stabilizer bar | 7. Suspension control arm | (a) : 50 N·m (5.0 kgf-m, 36.5 lb-ft) |
| 2. Stabilizer bushing | 8. Control arm mounting bolt | (b) : 135 N·m (13.5 kgf-m, 98.0 lb-ft) |
| 3. Stabilizer mounting bracket | 9. Control arm nut | (c) : 60 N·m (6.0 kgf-m, 43.5lb-ft) |
| 4. Stabilizer bar mounting bracket bolt | 10. Suspension frame | (d) : 55 N·m (5.5 kgf-m, 40.0 lb-ft) |
| 5. Stabilizer joint | 11. Suspension frame mounting bolt<br>: If reuse bolt, apply engine oil to thread, bearing and trunk surface. | |

www.cargeek.ir

www.CarGeek.ir

## Front Suspension Frame, Stabilizer Bar and/or Bushings Removal and Installation

S5JB0A2206015

### Removal

1) Hoist vehicle and remove wheels (right & left).
2) Remove engine under cover.
3) Remove suspension control arm referring to “Suspension Control Arm Removal and Installation: ”.
4) Remove right side and left side front drive shaft assembly referring to “Front Drive Shaft Assembly Removal and Installation: Front in Section 3A”.
5) Remove stabilizer joints (1). When loosening joint nut, hold stud with hexagon wrench.

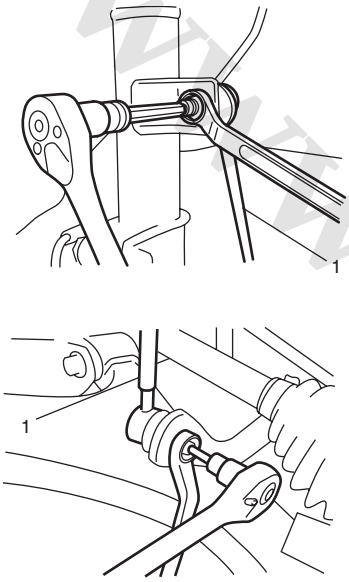


I5JB0A220041-01

6) Disconnect front fender lining clip (1) (if equipped with head light auto leveling system).

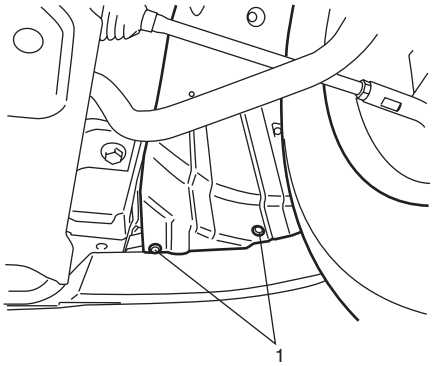


I5JB0A220042-01

7) Disconnect front height sensor connector (1) (if equipped with head light auto leveling system) and then detach clip (2).

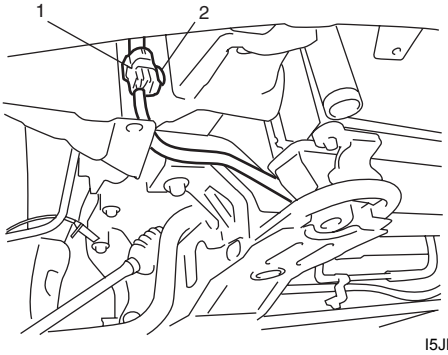


I5JB0A220043-01

8) Disconnect steering lower shaft from pinion shaft referring to “P/S Gear Case Assembly Removal and Installation: in Section 6C”.
9) Detach low pressure return hose (2) from low pressure return pipe (3) and then disconnect pipe bracket (1).

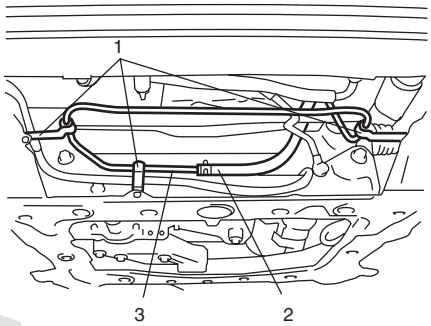


I5JB0A220044-01

10) Remove gear box union bolt (1).

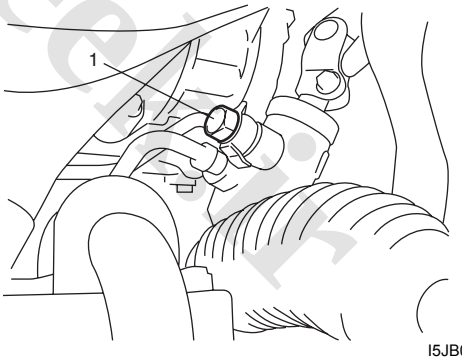


I5JB0A220045-01

www.cargeek.ir

www.CarGeek.ir


11) Remove front propeller shaft referring to “Propeller Shaft Removal and Installation: in Section 3D”.
12) Fix radiator (2) to body with rope (1) to avoid the radiator (2) fall off when front suspension frame lowered.

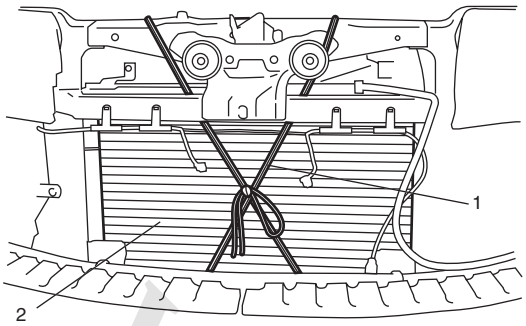

I5JB0A220046-01

13) Support engine assemble as follows.
    - For using engine supporting device
      Using engine supporting device, support engine according to “Engine Supporting Points: in Section 0A”.

**⚠ CAUTION**

**Be sure to support engine by using engine front hunger only. Failure to follow this instruction could result in damage to engine front and rear hungers.**

    - For using chain hoist
    a) Remove hood referring to “Hood Removal and Installation: in Section 9J”.
    b) Support engine assemble by using chain hoist.
14) Support suspension frame at the specified positions (1) indicated in figure.

**⚠ WARNING**

**When removing suspension frame, be sure to apply some supporting equipment under it at well-balanced position as shown in the figure section so as to prevent from its drop.**

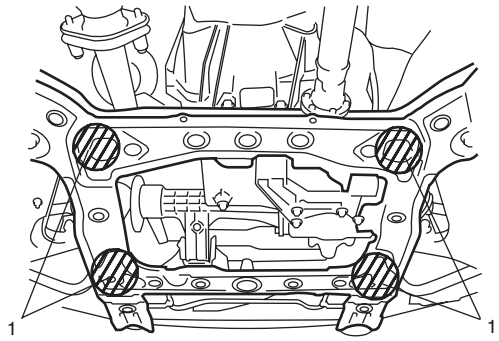

I5JB0A220047-01

15) Remove engine front body side mounting nuts (1).
16) Remove suspension frame mounting bolts (2), and then lower suspension frame (3) with stabilizer bar, P/S gear box assembly and front differential assembly.

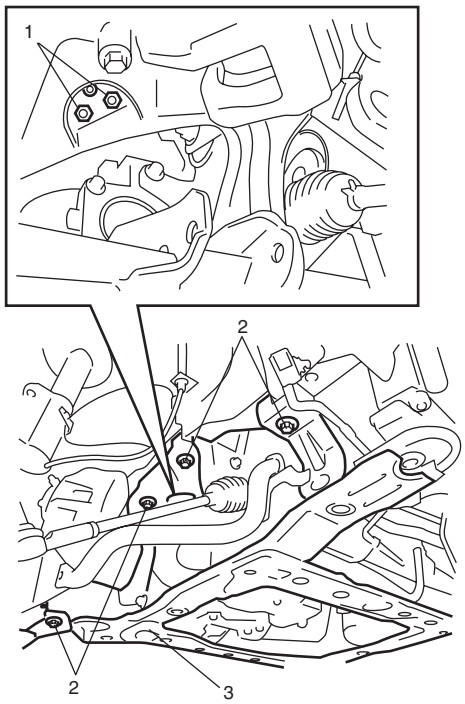

I5JB0A220048-01

17) Remove P/S gear box assembly (1) and front differential assembly (2) referring to “P/S Gear Case Assembly Removal and Installation: in Section 6C” and “Front Differential Dismounting and Remounting: Front in Section 3B”.

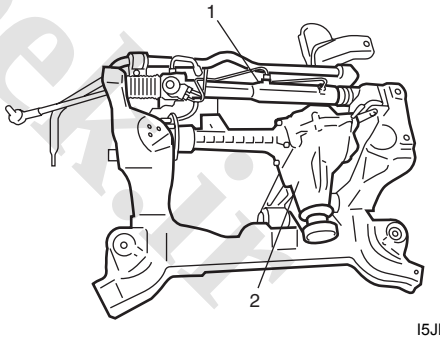

I5JB0A220049-01

www.cargeek.ir

www.CarGeek.ir

18) Remove stabilizer bar (1) and bushing (2) from suspension frame (3).

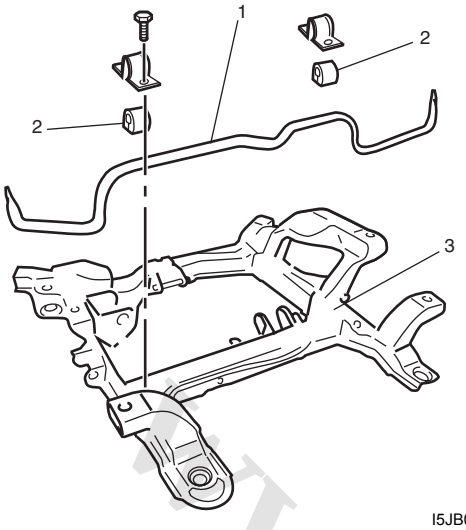

I5JB0A220050-01

### Installation

1) When installing stabilizer, loosely assemble all components while insuring that stabilizer is centered, side-to-side.
2) Install stabilizer bar (1), stabilizer bushing (2) and stabilizer mounting bracket (3) to suspension frame.

**NOTE**

**Install the stabilizer bar whose mark (5) is to front.**

3) Tighten stabilizer bar mounting bracket bolts (4) to specified torque.

**Tightening torque**
**Stabilizer bar mounting bracket bolt (a): 50 N·m ( 5.0 kgf-m, 36.5 lb-ft)**

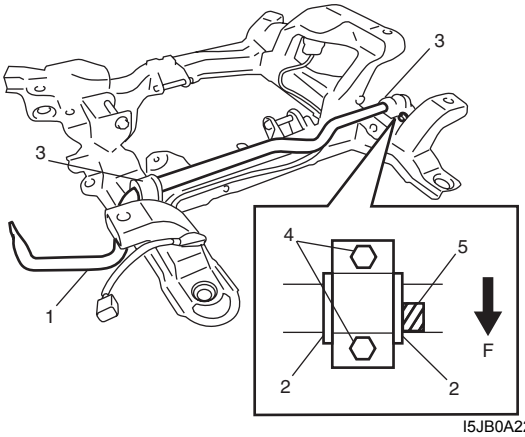

I5JB0A220051-01

F: Forward

4) Install P/S gear box assembly (1) and front differential assembly (2) referring to “P/S Gear Case Assembly Removal and Installation: in Section 6C” and “Front Differential Dismounting and Remounting: Front in Section 3B”.

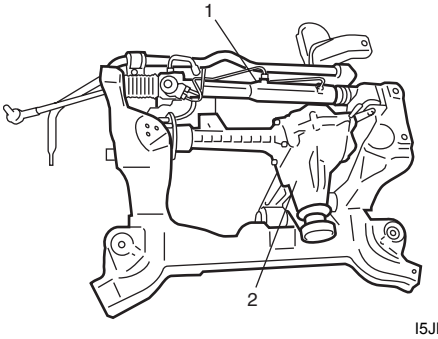

I5JB0A220049-01

5) Install suspension frame.

**⚠ WARNING**

**When installing suspension frame, be sure to apply some supporting equipment under it at well-balanced position as shown in the figure section so as to prevent from its drop.**

**⚠ CAUTION**

**Lug (2) in suspension frame (1) must be mated to the corresponding hole in body. And also engine front body side mounting bolts (3) and engine mount lug (4) must be mated to the corresponding holes in suspension frame.**

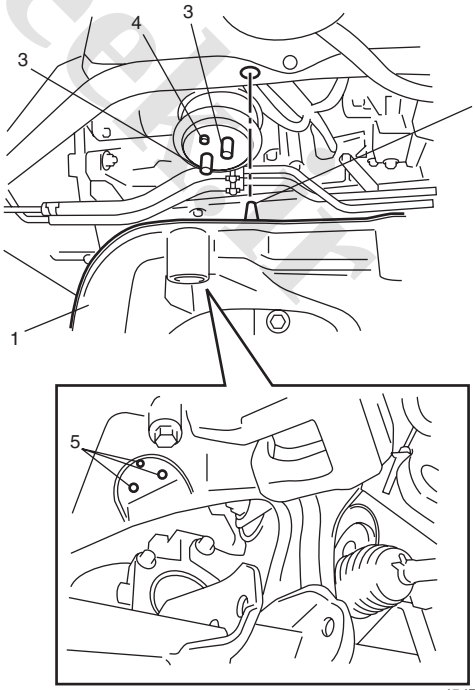

I5JB0A220052-02

www.cargeek.ir

www.CarGeek.ir


6) Tighten suspension frame mounting bolts (1) and engine front body side mounting nuts (2) to specified torque.

**⚠ CAUTION**

**If reuse suspension frame mounting bolt, apply engine oil to thread, bearing and trunk surface.**

**Tightening torque**
**Suspension frame mounting bolt (a): 135 N·m ( 13.5 kgf-m, 98.0 lb-ft)**
**Engine front body side mounting nut (b): 55 N·m (5.5 kgf-m, 40.0 lb-ft)**

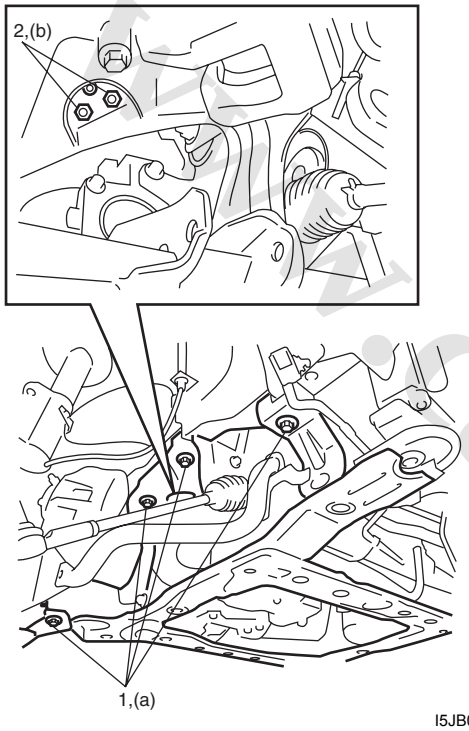

I5JB0A220053-01

7) Remove chain hoist from engine and the rope (1) from the radiator (2).

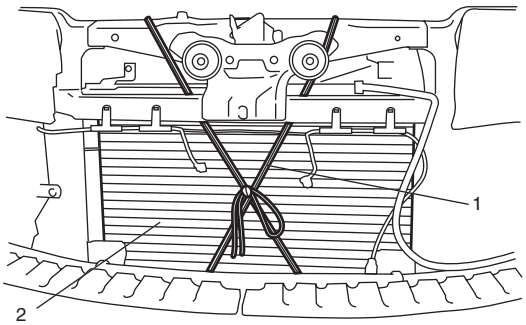

I5JB0A220046-01

8) Install hood referring to “Hood Removal and Installation: in Section 9J”.
9) Install front propeller shaft referring to “Propeller Shaft Removal and Installation: in Section 3D”.
10) Tighten pipe bracket (1) bolts to specified torque and then insert low pressure return hose (2) to low pressure return pipe (3).

**Tightening torque**
**Pipe bracket bolt: 11 N·m (1.1 kgf-m, 8.0 lb-ft)**

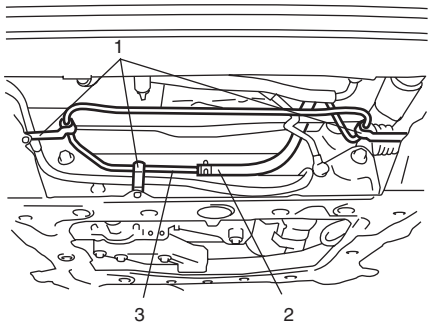

I5JB0A220044-01

11) Tighten union gear box bolt (1) to specified torque.

**Tightening torque**
**Union gear box bolt (a): 35 N·m (3.5 kgf-m, 25.5 lb-ft)**

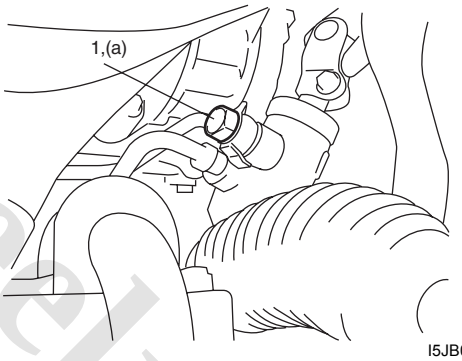

I5JB0A220054-01

12) Connect steering lower shaft from pinion shaft Steering referring to “P/S Gear Case Assembly Removal and Installation: in Section 6C”.
13) Connect front height sensor connector (1) (if equipped with head light auto leveling system) and then detach clip (2).

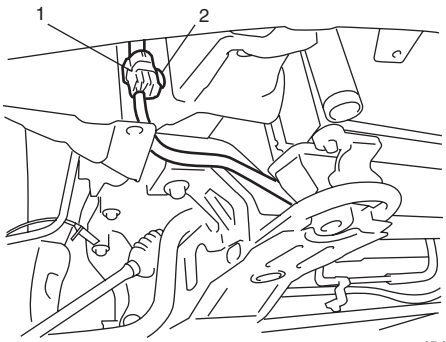

I5JB0A220043-01

www.cargeek.ir

www.CarGeek.ir

14) Connect front fender lining clip (1) (if equipped with head light auto leveling system).

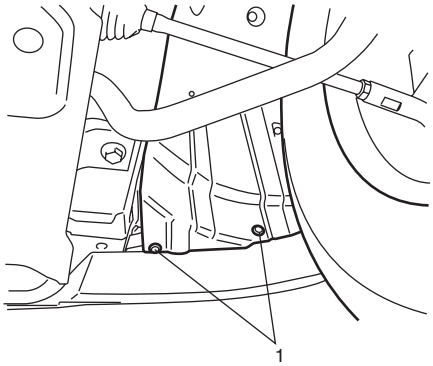


I5JB0A220042-01

15) Install stabilizer joints (1), and tighten nuts to specified torque. When tightening, hold stud with hexagon wrench.

**Tightening torque**
**Stabilizer joint nut (a): 60 N·m (6.0 kgf-m, 43.5 lb-ft)**

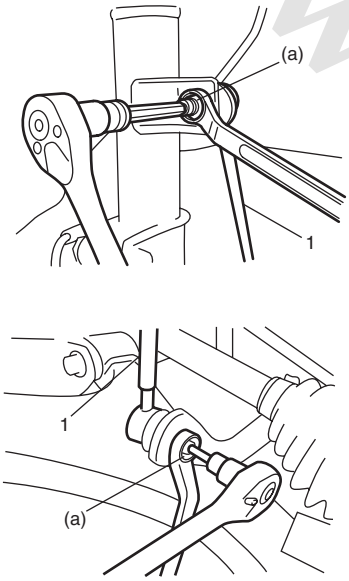


I5JB0A220055-01

16) Install right side and left side front drive shaft assembly referring to “Front Drive Shaft Assembly Removal and Installation: Front in Section 3A”.
17) Install suspension control arm referring to “Suspension Control Arm Removal and Installation: ”.
18) Install engine under cover.
19) Install wheels (right & left) and lower hoist.
20) After installation, be sure to fill specified power steering fluid and bleed air referring to “P/S System Air Bleeding Procedure: in Section 6C”.
21) Adjust headlight auto leveling system, refer to “Initialization of Auto Leveling Headlight System: in Section 9B”.

## Front Suspension Frame Check

S5JB0A2206016

Inspect for cracks, deformation or damage.
If defective, replace.

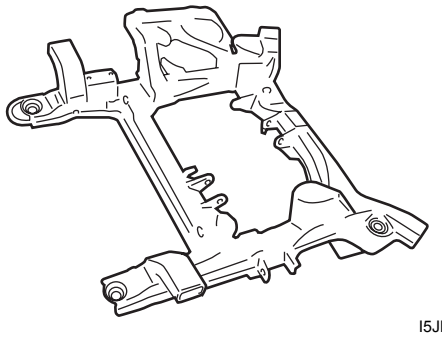

I5JB0A220056-01

## Front Stabilizer Bar, Bushing and/or Joint Check

S5JB0A2206017

**Stabilizer Bar**
Inspect for damage or deformation.
If defective, replace.

I5JB0A220057-01

**Stabilizer Bushing**
Inspect for damage, wear or deterioration.
If defective, replace.

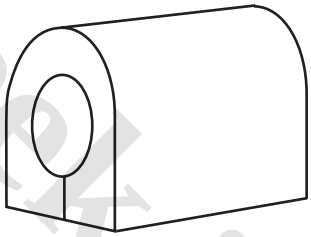

I5JB0A220058-01

www.cargeek.ir

www.CarGeek.ir


**Stabilizer Joint**

1) Check for smooth rotation.
2) Check damages of ball stud.
3) Check damages of dust cover.

**NOTE**

**Stabilizer joint (1) cannot be disassembled.**

If there is any damage to either parts, stabilizer joint assembly must be replaced as a complete unit.

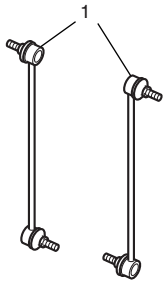

I4RH01220007-01

### Front Suspension Fasteners Check

S5JB0A2206018

Check each bolt and nut fastening suspension parts for tightness. Tighten loose one, if any, to specified torque, referring to “Front Suspension Construction: ”.

## Specifications

### Tightening Torque Specifications

S5JB0A2207001

| Fastening part | Tightening torque | | | Note |
|---|---|---|---|---|
| | N·m | kgf-m | lb-ft | |
| Tie-rod end lock nut | 65 | 6.5 | 47.0 | ☞ |
| Strut bracket nut | 135 | 13.5 | 98.0 | ☞ / ☞ |
| Brake hose mounting bolt | 25 | 2.5 | 18.0 | ☞ |
| Stabilizer joint nut | 60 | 6.0 | 43.5 | ☞ / ☞ |
| Front wheel speed sensor harness clamp bolt | 10 | 1.0 | 7.5 | ☞ |
| Strut support nut | 50 | 5.0 | 36.5 | ☞ |
| Wheel nut | 100 | 10.0 | 72.5 | ☞ / ☞ / ☞ / ☞ |
| Strut nut | 90 | 9.0 | 65.0 | ☞ |
| Wheel hub housing bolt | 50 | 5.0 | 36.5 | ☞ |
| Caliper carrier bolt | 85 | 8.5 | 61.5 | ☞ |
| Drive shaft nut | 200 | 20.0 | 145.0 | ☞ / ☞ |
| Suspension arm ball joint nut | 55 | 5.5 | 40.0 | ☞ |
| Front wheel speed sensor bolt | 10 | 1.0 | 7.5 | ☞ |
| Tie-rod end nut | 45 | 4.5 | 32.5 | ☞ / ☞ |
| Suspension control arm ball joint nut | 55 | 5.5 | 40.0 | ☞ |
| Suspension control arm nut | 45 | 4.5 | 32.5 | ☞ |
| Stabilizer bar mounting bracket bolt | 50 | 5.0 | 36.5 | ☞ |
| Suspension frame mounting bolt | 135 | 13.5 | 98.0 | ☞ |
| Engine front body side mounting nut | 55 | 5.5 | 40.0 | ☞ |
| Pipe bracket bolt | 11 | 1.1 | 8.0 | ☞ |
| Union gear box bolt | 35 | 3.5 | 25.5 | ☞ |

**NOTE**

**The specified tightening torque is also described in the following.**
**“Front Suspension Construction: ”**
**“Front Strut Assembly Components: ”**
**“Front Wheel Hub Assembly and Steering Knuckle Components: ”**
**“Front Suspension Frame, Stabilizer Bar and/or Bushings Components: ”**

**Reference:**
For the tightening torque of fastener not specified in this section, refer to “Fastener Information: in Section 0A”.

www.cargeek.ir

www.CarGeek.ir

# Special Tools and Equipment

## Recommended Service Material

S5JB0A2208001

| Material | SUZUKI recommended product or Specification | | Note |
|---|---|---|---|
| Grease | SUZUKI Super Grease A | P/No.: 99000–25010 | ☞ |

## Special Tool

S5JB0A2208002

| | |
|---|---|
| 09900–00411<br>Hexagon bit socket<br>☞ / ☞<br> | 09900–00414<br>Hexagon bit (6 mm)<br>☞ / ☞<br> 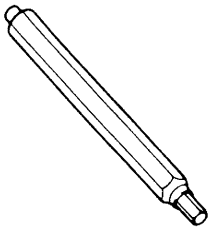 |
| 09913–75821<br>Bearing installer attachment<br>☞ / ☞<br> 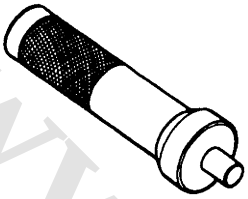 | 09941–56510<br>Socket wrench (19 mm)<br>☞ / ☞<br> 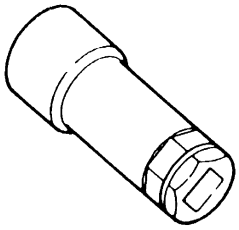 |
| 09943–25010<br>Spring compressor<br>☞<br> 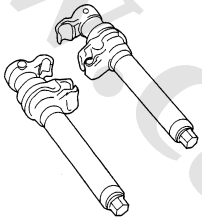 | 09945–55410<br>Bushing installer<br>☞ / ☞<br> 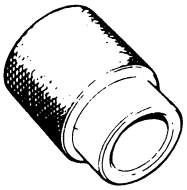 |

www.cargeek.ir

www.cargeek.ir

www.CarGeek.ir


# Rear Suspension

## General Description

### Rear Suspension Construction

S5JB0A2301001

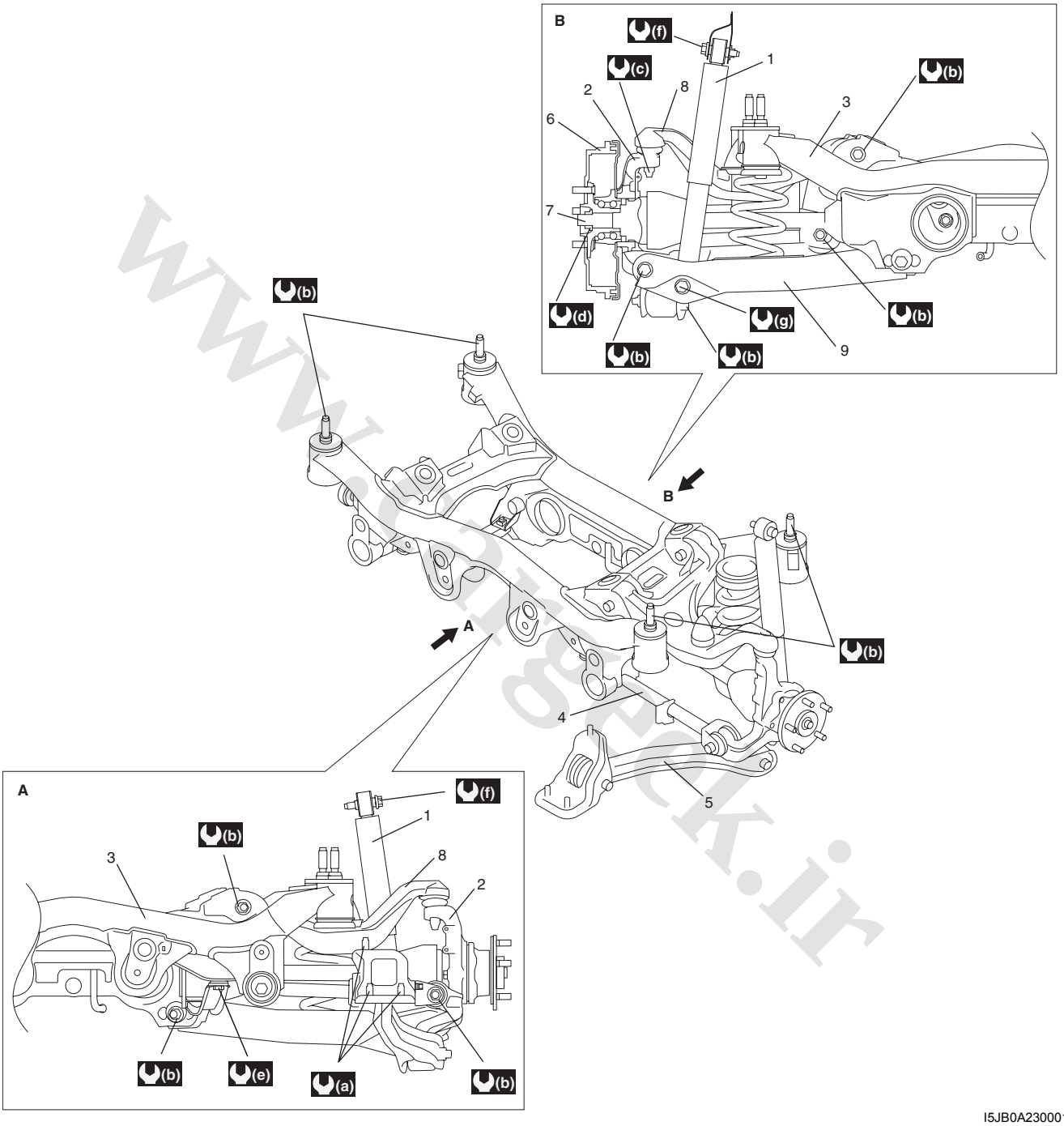


I5JB0A230001-03

| | | | |
|---|---|---|---|
| [A]: View A | 4. Control rod | 9. Lower Arm | (e) : 50 N·m (5.0 kgf-m, 36.5 lb-ft) |
| [B]: View B | 5. Trailing rod | (a) : 105 N·m (10.5 kgf-m, 76.0 lb-ft) | (f) : 60 N·m (6.0 kgf-m, 43.5 lb-ft) |
| 1. Rear shock absorber | 6. Rear brake drum | (b) : 135 N·m (13.5 kgf-m, 98.0 lb-ft) | (g) : 90 N·m (9.0 kgf-m, 65.0 lb-ft) |
| 2. Rear suspension knuckle | 7. Rear drive shaft | (c) : 55 N·m (5.5 kgf-m, 40.0 lb-ft) | |
| 3. Rear suspension frame | 8. Upper Arm | (d) : 200 N·m (20.0 kgf-m, 145.0 lb-ft) | |

www.cargeek.ir

www.CarGeek.ir

## Rear Wheel Alignment Construction

S5JB0A2301002

Among factors for rear wheel alignment, only toe and camber setting can be adjusted. Caster can't be adjusted. Therefore, should caster be out of specification due to the damage caused by hazardous road conditions or collision, whether the damage is in body or in suspension should be determined and damaged body should be repaired or damaged suspension should be replaced.

# Repair Instructions

## Rear Wheel Alignment Inspection and Adjustment

S5JB0A2306001

Among factors for rear wheel alignment, only toe and camber setting can be adjusted.
Caster can't be adjusted. Therefore, should caster be out of specification due to the damage caused by hazardous road conditions or collision, whether the damage is in body or in suspension should be determined and damaged body should be repaired or damaged suspension should be replaced.

### Toe and Camber Inspection and Adjustment

Preparation for toe and camber inspection and adjustment.

- Place vehicle in non-loaded state on level floor.
- Set steering wheel in straight state.
- Check that inflation pressure of each tire is adjusted properly and disc wheel is free from deflection.
- Check that each suspension part is free from bend, dent, wear or damage in any other form.
- Check that ground clearance at the right and left is just about the same.

**NOTE**

**To prevent possible incorrect reading of toe, camber or caster, vehicle front and rear end must be moved up and down and forward and rearward a few times before inspection.**

### Inspection

#### Toe Inspection

Measure toe with toe-in gauge (1).
Toe should be within following specifications.

**Toe**
**IN 6.0 ± 2.0 mm (0.2362 ± 0.0787 in.)**

If toe is out of the specification, adjust toe properly.

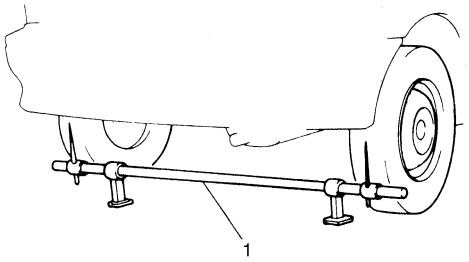


I2RH01230057-01

#### Camber Inspection

Measure camber with camber tester.
Camber should be within following specifications.

**Camber**
**–1° 15' ± 15'**

If camber is out of the specification, adjust camber properly.

www.cargeek.ir

www.CarGeek.ir


## Adjustment

### Control rod adjustment

1) Loosen right and left control rod mount nuts (1).

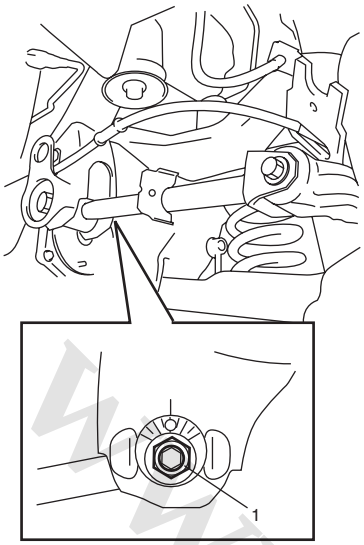


I5JB0A230002-01

2) Adjust toe and camber to satisfy the specification by turning right and left control rod inner bolts (cam bolts) (1) with the same amount.

**NOTE**

**When bolt is turned a-direction, camber becomes "+" and toe becomes "IN". When bolt is turned b-direction, camber becomes "–" and toe becomes "OUT".**

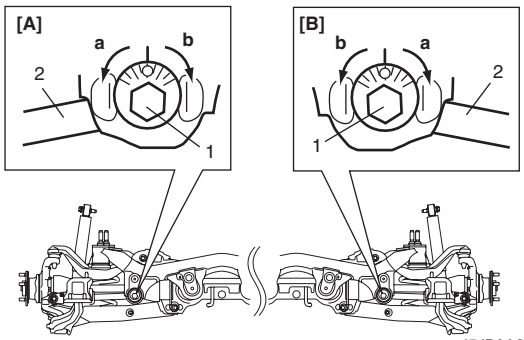


I5JB0A230003-01

| | |
|---|---|
| [A]: Right side | 2. Control rod |
| [B]: Left side | |

3) After adjustment, tighten right and left nuts to specified torque while holding cam bolt with another wrench to prevent it from turning.

**Tightening torque**
**Control rod mount nut: 135 N·m (13.5 kgf-m, 98.0 lb-ft)**

### Lower arm adjustment

1) Loosen right and left lower arm mount nuts (1).

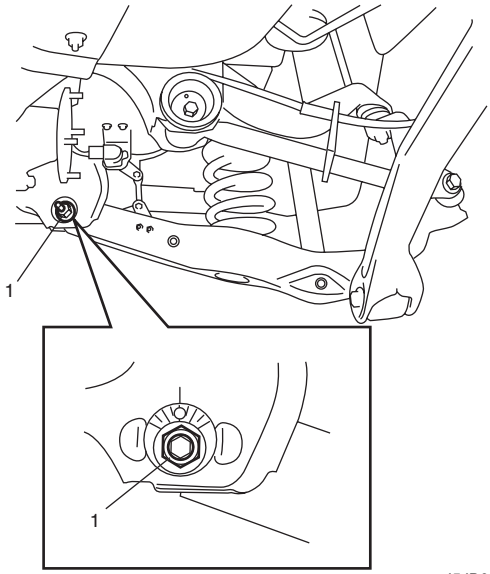


I5JB0A230004-01

2) Adjust toe and camber to satisfy the specification by turning right and left lower arm inner bolts (cam bolts) (1) with same amount.

**NOTE**

**When bolt is turned a-direction, camber becomes "+" and toe becomes "OUT". When bolt is turned b-direction, camber becomes "–" and toe becomes "IN".**

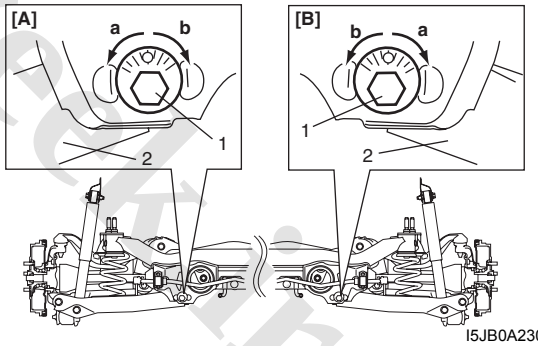


I5JB0A230005-01

| | |
|---|---|
| [A]: Left side | 2. Lower arm |
| [B]: Right side | |

3) After adjustment, tighten right and left nuts to specified torque while holding cam bolt with another wrench to prevent it from turning.

**Tightening torque**
**Lower arm mount nut: 135 N·m (13.5 kgf-m, 98.0 lb-ft)**

www.cargeek.ir

www.CarGeek.ir

## Reference Information

### Side slip limit

When checked with side slip tester, side slip should satisfy following specification.

**Side slip limit**

**IN 5.5 – IN 9.5 mm/m (IN 0.2166 – IN 0.3740 in/3.3 ft)**

If side slip exceeds the limit, toe or wheel alignment may not be correct.

## Rear Shock Absorber and Rear Coil Spring Components

S5JB0A2306005

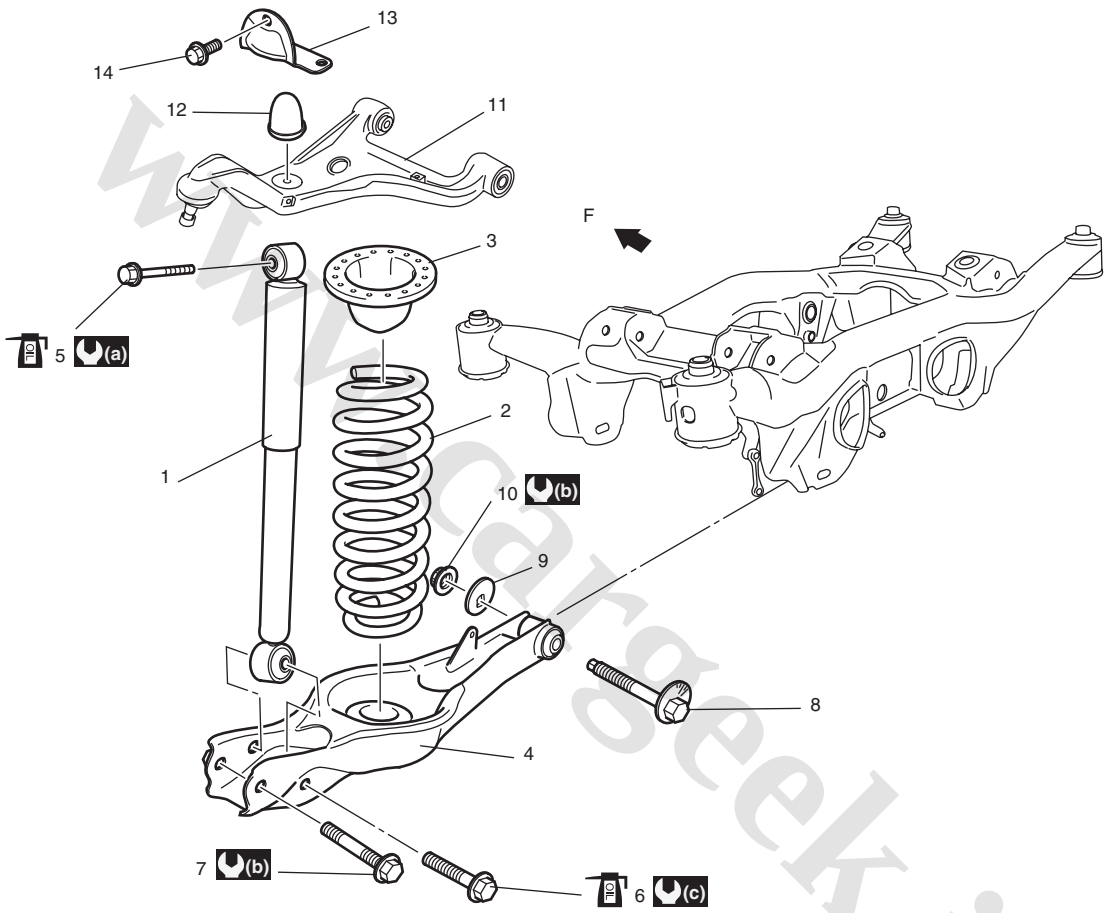


I5JB0A230006-04

| | | |
|---|---|---|
| 1. Rear shock absorber | 7. Lower arm outer bolt | 13. Bump stopper upper seat |
| 2. Rear coil spring | 8. Lower arm inner bolt | 14. Bump stopper upper seat bolt |
| 3. Coil spring rubber seat | 9. Lower arm washer | F: Forward |
| 4. Lower arm | 10. Lower arm mount nut | (a) : 60 N·m (6.0 kgf-m, 43.5 lb-ft) |
| 5. Shock absorber upper bolt<br>: If reuse bolt, apply engine oil to thread, bearing and trunk surface. | 11. Upper arm | (b) : 135 N·m (13.5 kgf-m, 98.0 lb-ft) |
| 6. Shock absorber lower bolt<br>: If reuse bolt, apply engine oil to thread, bearing and trunk surface. | 12. Bump stopper | (c) : 90 N·m (9.0 kgf-m, 65.0 lb-ft) |

www.cargeek.ir

www.CarGeek.ir


## Rear Shock Absorber Removal and Installation

S5JB0A2306006

### Removal

1) Hoist vehicle, allowing rear suspension to hang free.
2) Remove wheel.
3) Support lower arm (1) with jack (2) and remove shock absorber bolts (3).

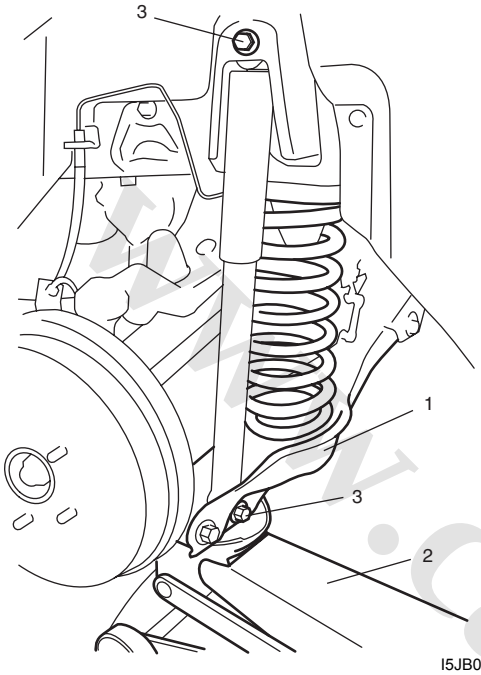


I5JB0A230007-01

4) Compress the shock absorber enough to remove it from body.

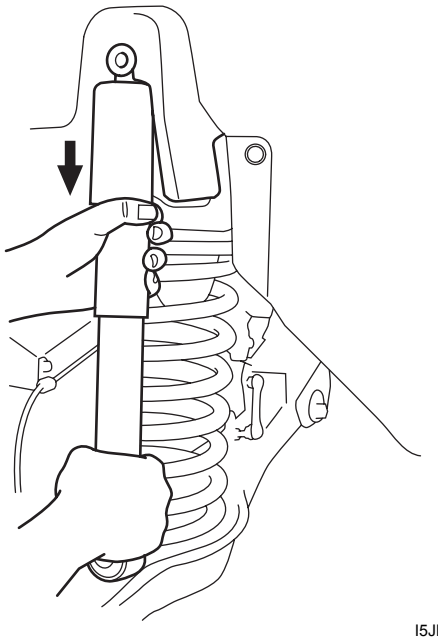

I5JB0A230008-01

### Installation

Install shock absorber by reversing removal procedure, noting the following instructions.

- Tighten all fasteners to specified torque.

**Tightening torque**
**Shock absorber upper bolt (a): 60 N·m (6.0 kgf-m, 43.5 lb-ft)**
**Shock absorber lower bolt (b): 90 N·m (9.0 kgf-m, 65.0 lb-ft)**
**Wheel nut: 100 N·m (10.0 kgf-m, 72.5 lb-ft)**

**⚠ CAUTION**

- **If reuse shock absorber bolts, apply engine oil to thread, bearing and trunk surface.**
- **Shock absorber bolts must be tightened in non-loaded condition.**

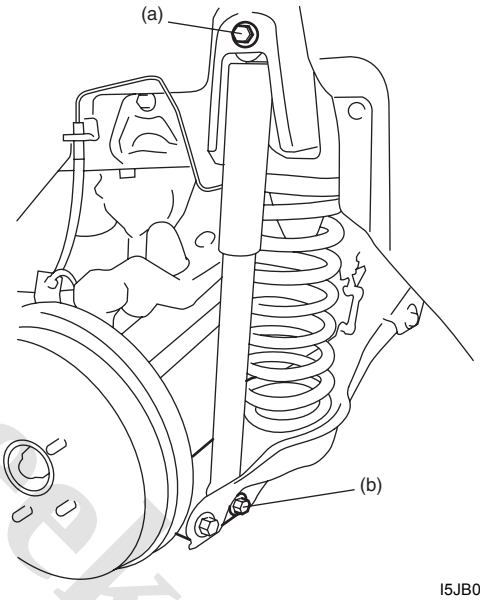


I5JB0A230081-01

www.cargeek.ir

www.CarGeek.ir

## Shock Absorber Check

S5JB0A2306026

- Inspect for deformation or damage.
- Inspect bushings for wear or damage.
- Inspect for evidence of oil leakage.

Replace any defective part.

**⚠ WARNING**

**When handling rear shock absorber (1) in which high-pressure gas is sealed, make sure to observe the following precautions.**

- **Don't disassemble it.**
- **Don't put it into the fire.**
- **Don't store it where it gets hot.**
- **Before disposing it, be sure to drill a hole in it where shown by an arrow in the figure and let gas and oil out. Lay it down sideways for this work.**
- **The gas itself is harmless but it may issue out of the hole together with chips generated by the drill. Therefore, be sure to wear goggle.**

**Drill hole diameter**
**"a": Approx. 3 mm (0.12 in.)**

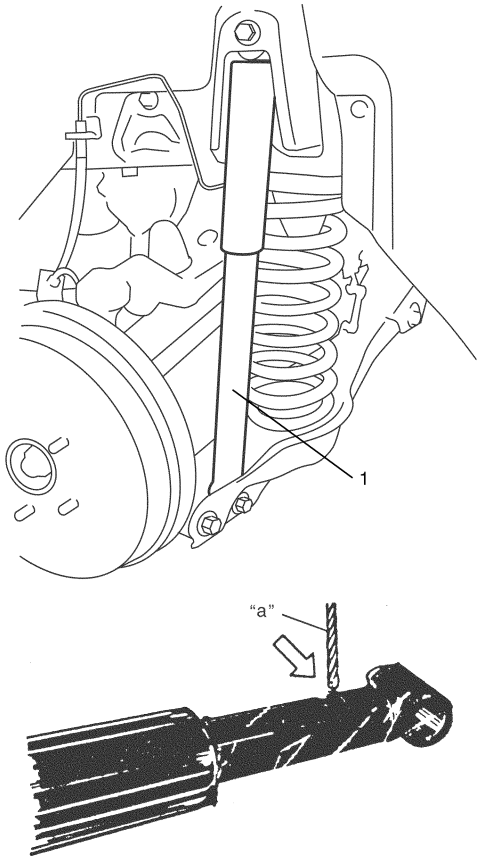


I5JB0A230011-01

## Rear Coil Spring and Bump Stopper Removal and Installation

S5JB0A2306027

### Removal

1) Hoist vehicle, allowing rear suspension to hang free.
2) Remove rear wheels.
3) Disconnect rear height sensor link (if equipped) from lower arm for left side referring to "Height Sensor Removal and Installation (If Equipped): in Section 9B".
4) Remove rear shock absorber referring to "Rear Shock Absorber Removal and Installation: ".
5) Put match marks (1) on lower arm washer (2) and on suspension frame (3) to install the bolts correctly in position.
6) Loosen lower arm mount nut (4).

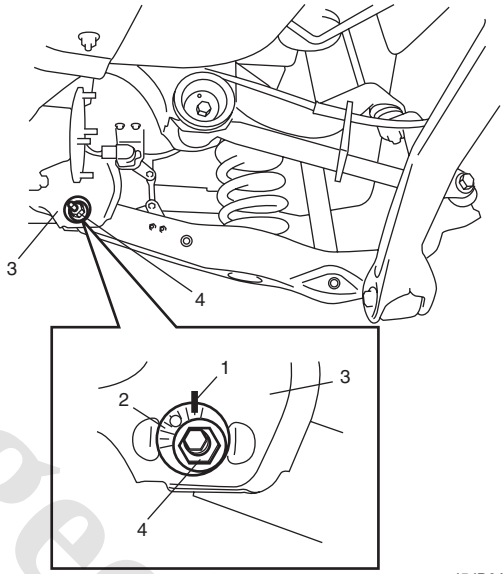


I5JB0A230010-01

7) Remove lower arm outer bolt (1).
8) Lower jack and then remove rear coil spring (2) and coil spring rubber seat (3).

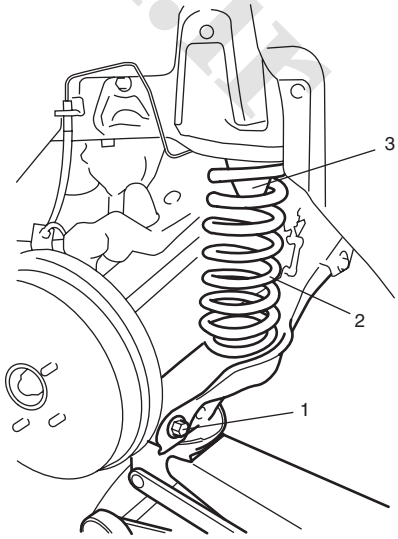


I5JB0A230012-01

www.cargeek.ir

www.CarGeek.ir


9) Remove bump stopper (1) from suspension upper arm (2) by using special tool (A).

**Special tool**
**(A): 09941–66010**

10) Remove bump stopper upper seat bolts (4), and bump stopper upper seat (3) from body.

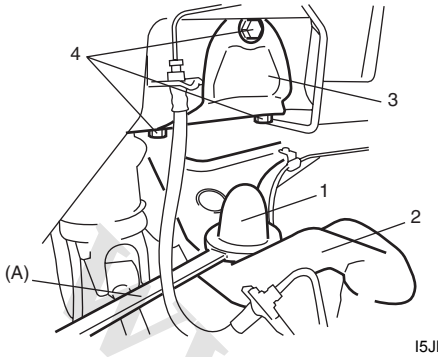


I5JB0A230013-01

**Installation**

1) Install bump stopper upper seat (1) to body and tighten bolts (2).
2) Tighten bump stopper (3) to specified torque by using special tool (A).

**Special tool**
**(A): 09941–66010**

**Tightening torque**
**Bump stopper (a): 50 N·m (5.0 kgf-m, 36.5 lb-ft)**

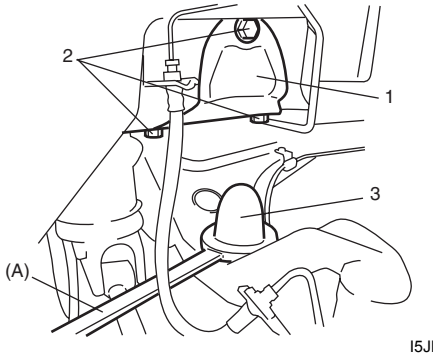


I5JB0A230014-01

3) Installing coil spring on lower arm and place coil spring end (1) onto lower arm (2) as shown.

**⚠ CAUTION**

- **Flat end coil spring is upward.**
- **Upper end of coil spring has to be firmly mated to coil spring rubber seat.**
- **Lower end of coil spring has to be match to marking (3) in figure.**
- **End of coil spring must not interfere with step of spring lower seat.**

4) Support lower arm (2) with jack (4).
5) Hoist jack and then install lower arm outer bolt (5) and tighten bolt temporarily by hand.

**⚠ CAUTION**

**If reuse lower arm outer bolt, apply engine oil to thread, bearing and trunk surface.**

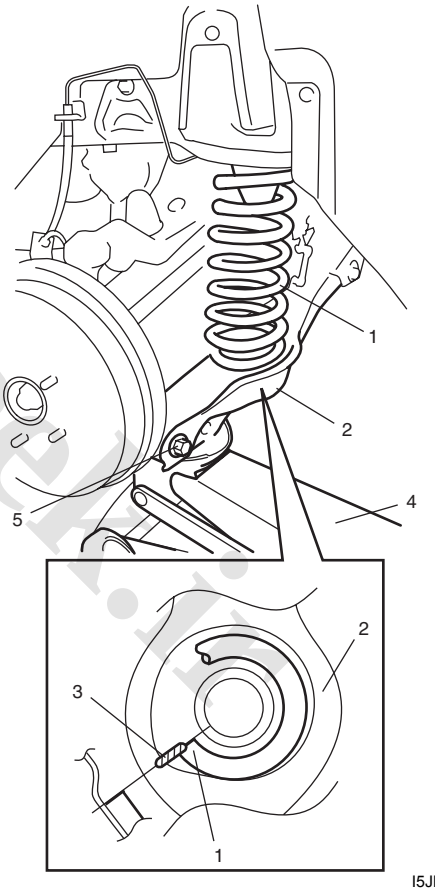


I5JB0A230015-01

www.cargeek.ir

www.CarGeek.ir

6) With marks (1) on lower arm washer (2) and rear suspension frame (3) marked before remove aligned to each other, tighten lower arm mount nut (4) temporarily by hand.

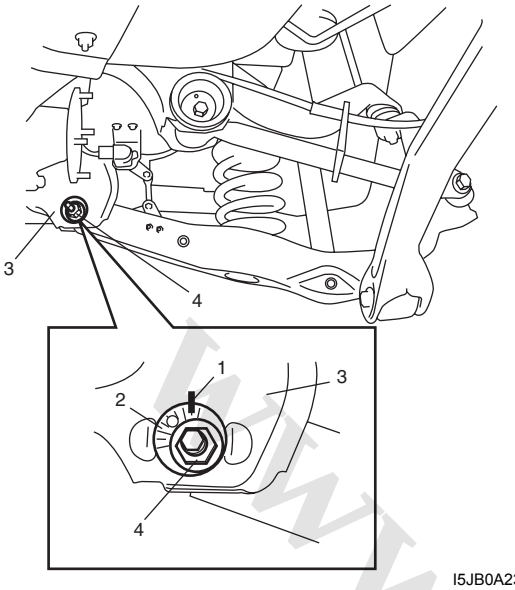

I5JB0A230010-01

7) Install rear shock absorber referring to “Rear Shock Absorber Removal and Installation: ”.
8) Connect rear height sensor link (if equipped) to lower arm for left side referring to “Height Sensor Removal and Installation (If Equipped): in Section 9B”.
9) Install wheel with nuts and lower vehicle.
10) Tighten wheel nuts to specified torque.

**Tightening torque**
**Wheel nut: 100 N·m (10.0 kgf-m, 72.5 lb-ft)**

11) Tighten lower arm outer bolt and lower arm mount nut, shock absorber bolts to specified torque with vehicle weight on suspension.

**⚠ CAUTION**

- **It is the most desirable to have vehicle off hoist and in non-loaded condition when tightening them.**
- **Tighten Lower arm washer with match marks aligned.**

**Tightening torque**
**Lower arm outer bolt: 135 N·m (13.5 kgf-m, 98.0 lb-ft)**
**Lower arm mount nut: 135 N·m (13.5 kgf-m, 98.0 lb-ft)**
**Shock absorber upper bolt: 60 N·m (6.0 kgf-m, 43.5 lb-ft)**
**Shock absorber lower bolt: 90 N·m (9.0 kgf-m, 65.0 lb-ft)**

12) Check rear toe and camber adjust it as necessary. For check and adjustment procedures, refer to “Rear Wheel Alignment Inspection and Adjustment: ”.
13) Adjust headlight auto leveling system, refer to “Initialization of Auto Leveling Headlight System: in Section 9B”.

## Rear Coil Spring Check

S5JB0A2306028

- Inspect for cracks, deformation or damage. If any, replace defective part.

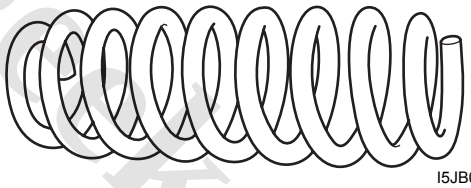
I5JB0A230016-01

www.cargeek.ir

www.CarGeek.ir


## Rod and Arm Components

S5JB0A2306009

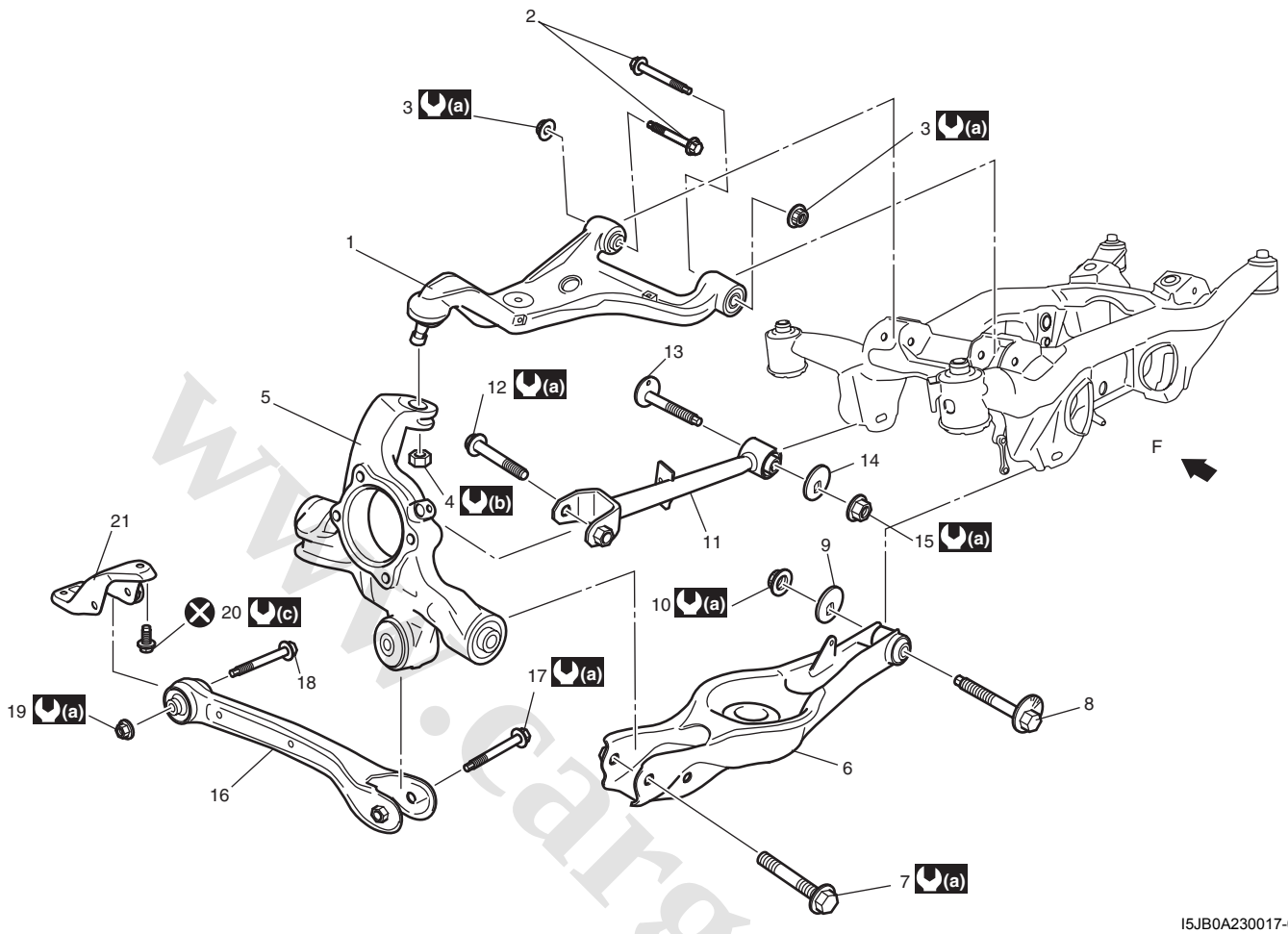


I5JB0A230017-02

| | | | |
|---|---|---|---|
| 1. Upper arm | 8. Lower arm inner bolt | 15. Control rod mount nut | F: Forward |
| 2. Upper arm bolt | 9. Lower arm washer | 16. Trailing rod | (a) : 135 N·m (13.5 kgf-m, 98.0 lb-ft) |
| 3. Upper arm mount nut | 10. Lower arm mount nut | 17. Trailing rod rear bolt | (b) : 55 N·m (5.5 kgf-m, 40.0 lb-ft) |
| 4. Upper arm joint nut | 11. Control rod | 18. Trailing rod front bolt | (c) : 105 N·m (10.5 kgf-m, 76.0 lb-ft) |
| 5. Rear suspension knuckle | 12. Control rod outer bolt | 19. Trailing rod mount nut | ⊗ : Do not reuse. |
| 6. Lower arm | 13. Control rod inner bolt | 20. Trailing rod mount bracket bolt | |
| 7. Lower arm outer bolt | 14. Control rod washer | 21. Trailing rod mount bracket | |

www.cargeek.ir

www.CarGeek.ir

## Control Rod Removal and Installation

S5JB0A2306010

### Removal

1) Hoist vehicle and remove rear wheels.
2) Support lower arm (1) with jack (2).

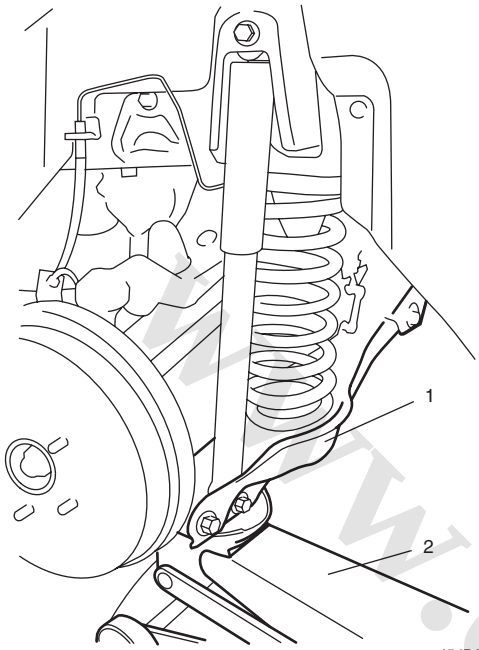


I5JB0A230018-01

3) Remove parking cable hanger bolt (1).

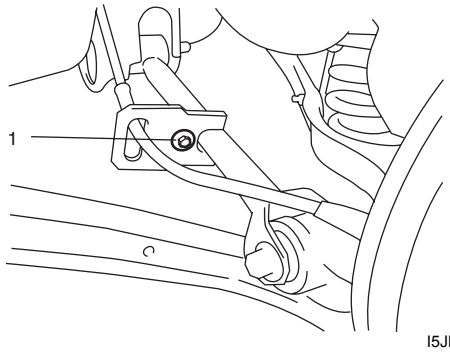


I5JB0A230019-01

4) Put match marks (1) on control rod washer (2) and on suspension frame (3) to install the bolts correctly in position.
5) Remove control rod inner bolt (4) and control rod outer bolt (5) and then control rod (6).

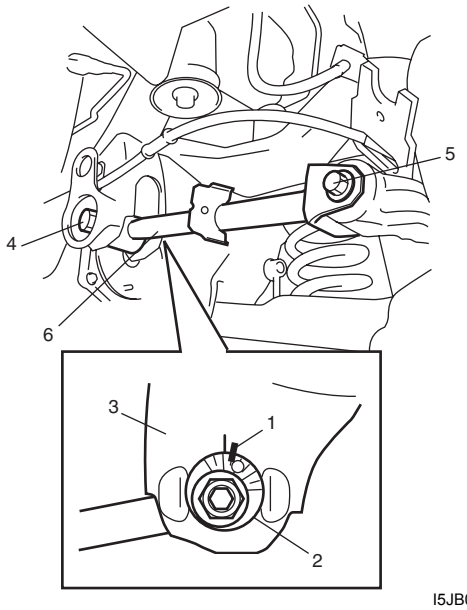


I5JB0A230020-01

### Installation

1) Install control rod (1).
   a) Install control rod (1) to rear suspension frame.
   b) Insert control rod inner bolt (2) from the vehicle frontward.
   c) Install control rod washer (3) with its graduated part facing up.
   d) Insert control rod outer bolt (4).

**⚠ CAUTION**

**If reuse control rod outer bolt, apply engine oil to thread, bearing and trunk surface.**

www.cargeek.ir

www.CarGeek.ir


e) The marks (5) on control rod washer (3) and rear suspension frame marked before its removal must be aligned and, tighten bolt and nut temporarily by hand.

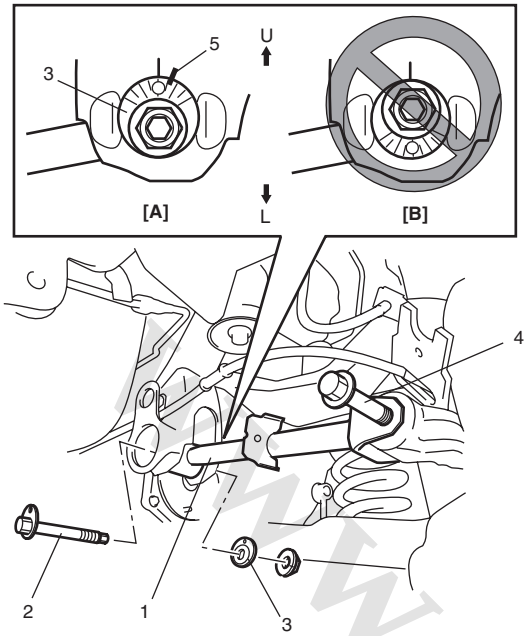

I5JB0A230021-01

| | |
|---|---|
| [A]: Correct | U: Upper side |
| [B]: Wrong | L: Lower side |

2) Tighten parking cable hanger bolt (1) to specified torque.

**Tightening torque**
**Parking cable hanger bolt (a): 10 N·m (1.0 kgf-m, 7.5 lb-ft)**

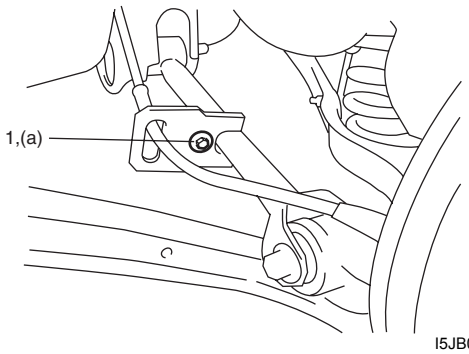

I5JB0A230022-01

3) Lower jack and remove floor jack (2) from lower arm (1).

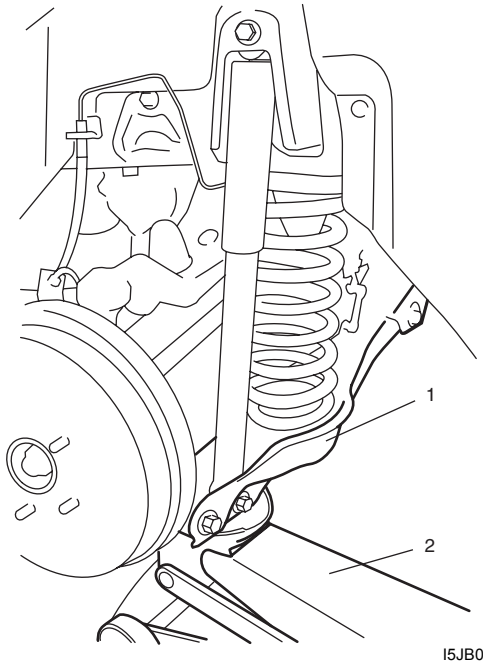

I5JB0A230018-01

4) Install rear wheels and lower hoist.
5) Tighten wheel nuts to specified torque.

**Tightening torque**
**Wheel nut: 100 N·m (10.0 kgf-m, 72.5 lb-ft)**

6) Tighten control rod mount nut and control rod outer bolt to specified torque with vehicle weight on suspension.

**⚠ CAUTION**

- **It is the most desirable to have vehicle off hoist and in non-loaded condition when tightening them.**
- **Tighten control rod washer with match marks aligned.**

**Tightening torque**
**Control rod mount nut: 135 N·m (13.5 kgf-m, 98.0 lb-ft)**
**Control rod outer bolt: 135 N·m (13.5 kgf-m, 98.0 lb-ft)**

7) Check rear toe and camber adjust it as necessary. For check and adjustment procedures, refer to “Rear Wheel Alignment Inspection and Adjustment: ”.

www.cargeek.ir

www.CarGeek.ir

## Control Rod / Bushing Disassembly and Assembly

S5JB0A2306029

### Disassembly

1) Push out control rod bushing by using hydraulic press (1) and special tool.

**Special tool**
**(A): 09913–84510**

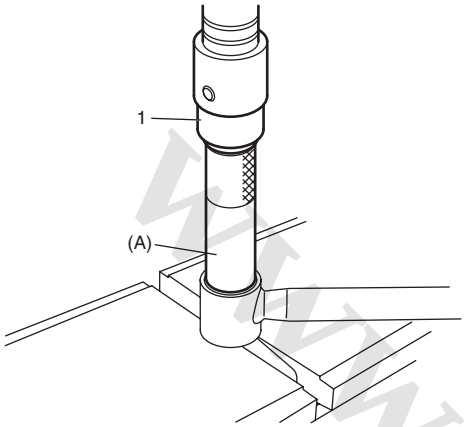


I5JB0A230023-02

### Assembly

1) Press-fit control rod bushing (1) by using press (2) and special tool.

**⚠ CAUTION**

**Be sure to use new bushing.**

**Special tool**
**(A): 09913–85210**

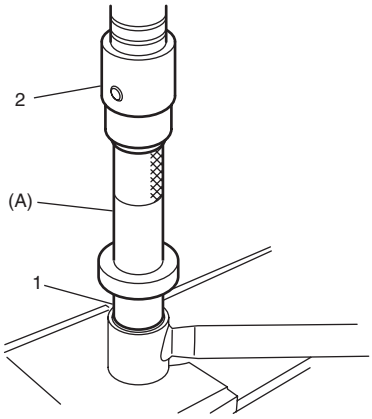


I5JB0A230082-01

2) Press-fit bushing so that dimensions “A” and “B” in figure become equal.

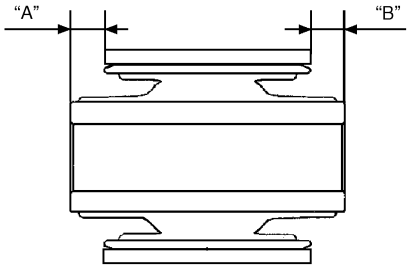


I5JB0A230024-01

## Control Rod Check

S5JB0A2306011

- Inspect for cracks, deformation or damage.
- Inspect bushing for wear and breakage.

If any faulty condition is found, replace.

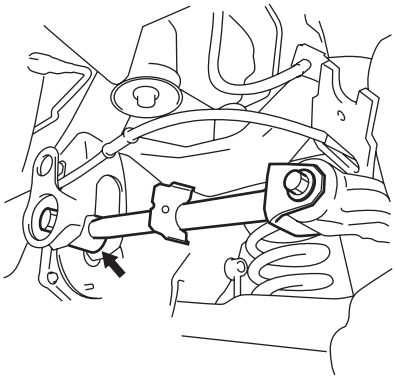

I5JB0A230025-01

www.cargeek.ir

www.CarGeek.ir


## Trailing Rod Removal and Installation

S5JB0A2306012

### Removal

1) Hoist vehicle and remove rear wheels.
2) Support lower arm (1) with jack (2).

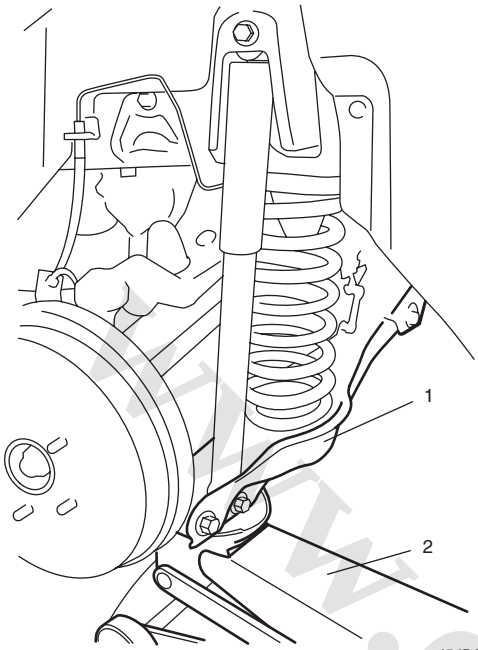


I5JB0A230018-01

3) Remove air suction pipe bolts (1) for 5door model only.

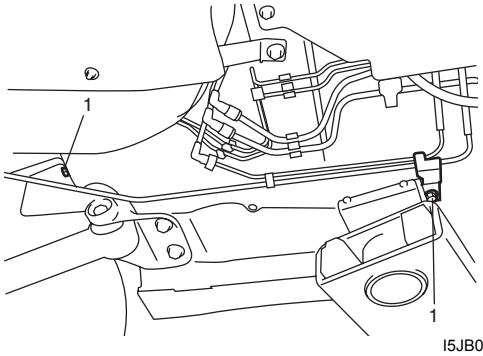


I5JB0A230026-01

4) Remove trailing rod front bolt (1) and trailing rod rear bolt (2) and then trailing rod (3).

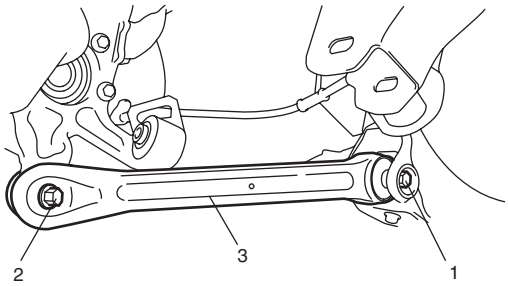


I5JB0A230027-01

5) Remove trailing rod mount bracket bolt (1) and then trailing rod mount bracket (2).

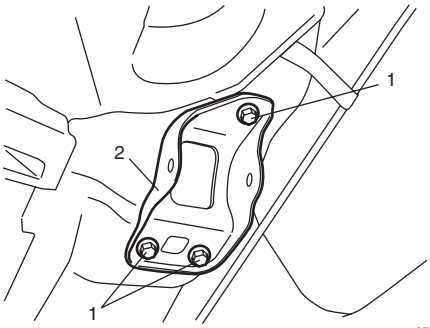


I5JB0A230028-02

### Installation

1) Install trailing rod mount bracket and then tighten trailing rod mount bracket bolt to specified torque.

**⚠ CAUTION**

- **Tighten the bolts in order of bolt (1), (2) and (3).**
- **Do not reuse removed trailing rod mount bracket bolt.**

**Tightening torque**
**Trailing rod mount bolt (a): 105 N·m (10.5 kgf-m, 76.0 lb-ft)**

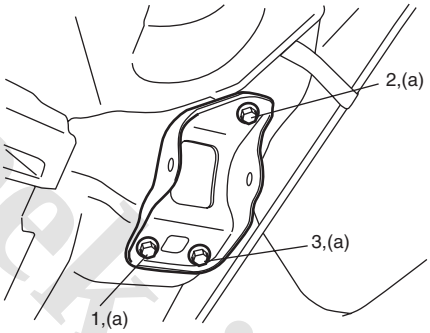


I5JB0A230029-02

www.cargeek.ir

www.CarGeek.ir

2) Install trailing rod (4).
   a) Install trailing rod and insert trailing rod front bolt (1) from the body inside.
   b) Insert trailing rod rear bolt (2).
   c) Tighten trailing rod rear bolt (2) and trailing rod mount nut (3) temporarily by hand.

**⚠ CAUTION**

**If reuse trailing rod mount nut and rear bolt, apply engine oil to thread, bearing and trunk surface.**

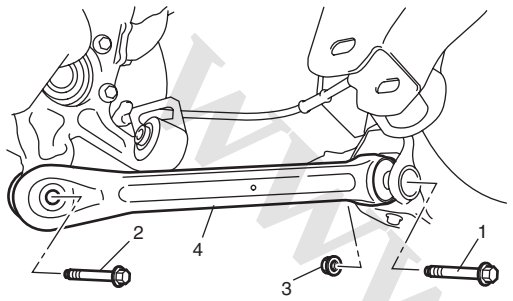

I5JB0A230030-01

3) Tighten air suction pipe bolts (1) to specified torque for 5door model only.

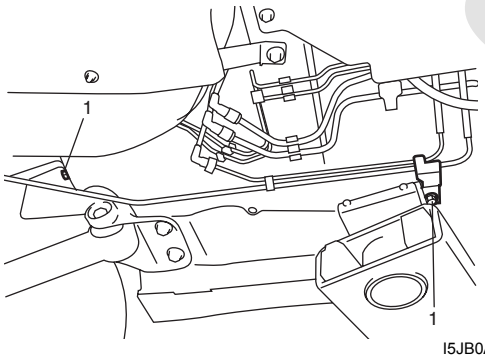

I5JB0A230026-01

4) Remove floor jack from lower arm.
5) Install rear wheels and lower hoist.
6) Tighten wheel nuts to specified torque.

**Tightening torque**
**Wheel nut: 100 N·m (10.0 kgf-m, 72.5 lb-ft)**

7) Tighten trailing rod mount nut and trailing rod rear bolt to specified torque with vehicle weight on suspension.

**⚠ CAUTION**

**It is the most desirable to have vehicle off hoist and in non-loaded condition when tightening them.**

**Tightening torque**
**Trailing rod mount nut: 135 N·m (13.5 kgf-m, 98.0 lb-ft)**
**Trailing rod rear bolt: 135 N·m (13.5 kgf-m, 98.0 lb-ft)**

8) Check rear toe and camber adjust it as necessary. For check and adjustment procedures, refer to “Rear Wheel Alignment Inspection and Adjustment: ”.

## Trailing Rod / Bushing Disassembly and Assembly

S5JB0A2306030

### Disassembly

1) Push out trailing rod bushing by using hydraulic press (1) and special tool.

**⚠ CAUTION**

**Remove bushing following the direction shown in figure since diameter “b” is bigger than diameter “a”.**

**Special tool**
**(A): 09945–56510**

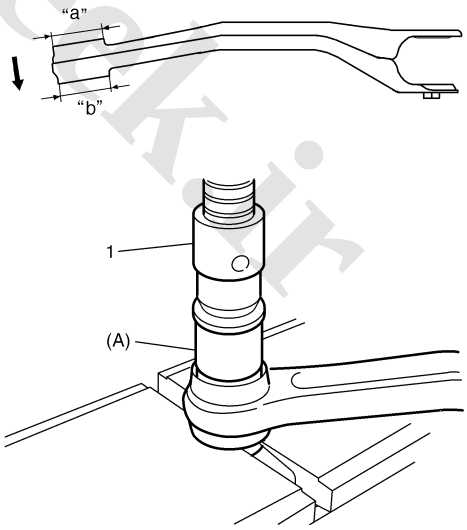

I5JB0A230031-03

www.cargeek.ir

www.CarGeek.ir


### Assembly

1) Press-fit trailing rod bushing (2) by using press (1) and special tool.

**⚠ CAUTION**

- **Be sure to use new bushing.**
- **Install bushing following the direction shown in figure since diameter “b” is bigger than diameter “a”.**

**Special tool**
**(A): 09945–56510**

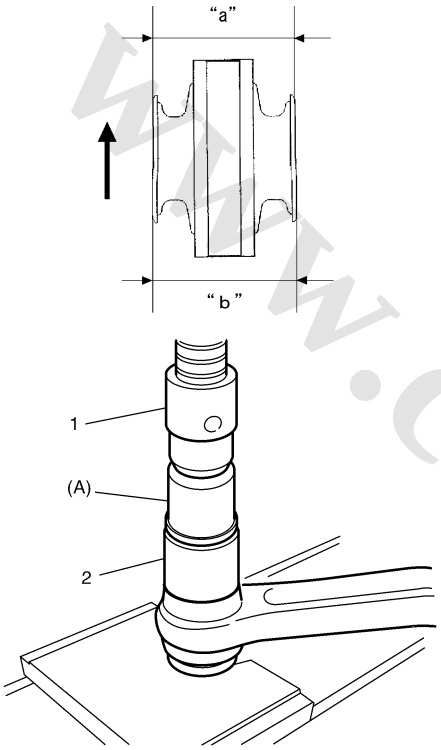


I5JB0A230079-02

2) Press-fit bushing (1) so that dimensions “A” and “B” in figure become equal.

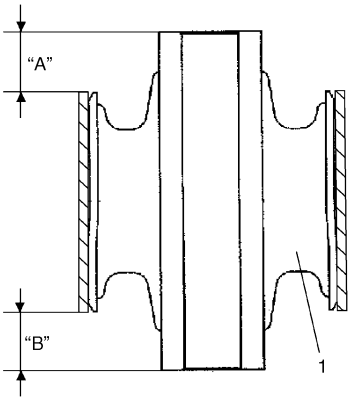


I5JB0A230032-02

### Trailing Rod Check

S5JB0A2306013

- Inspect for cracks, deformation or damage.
- Inspect bushing for wear and breakage.

If any faulty condition is found, replace.

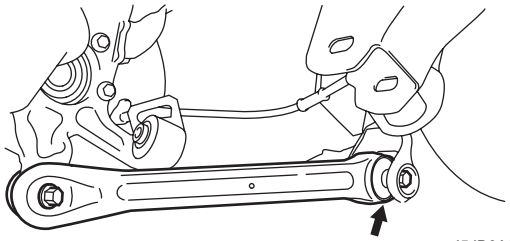

I5JB0A230033-01

### Lower Arm Removal and Installation

S5JB0A2306031

1) Hoist vehicle and remove rear wheels.
2) Put match marks (1) on lower arm washer (2) and on suspension frame (3) to install the bolts correctly in position.
3) Loosen lower arm mount nut (4).

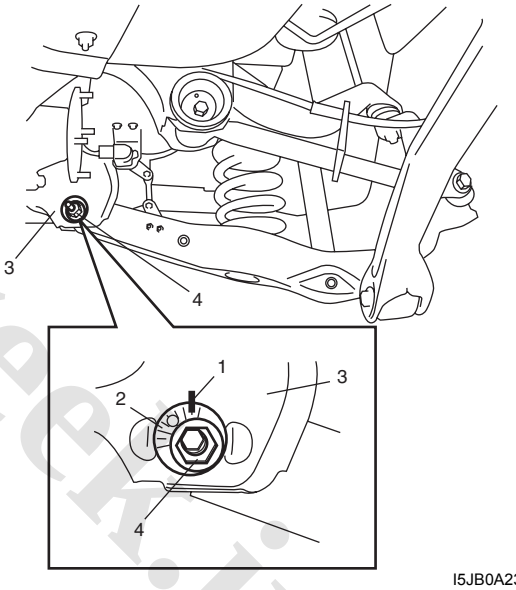


I5JB0A230010-01

4) Remove rear coil spring referring to “Rear Coil Spring and Bump Stopper Removal and Installation: ”.
5) Remove suspension rod mount bolt (1) and then lower arm (2).

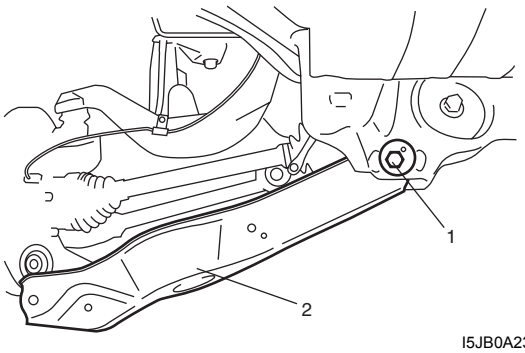


I5JB0A230034-01

www.cargeek.ir

www.CarGeek.ir

### Installation

1) Install lower arm.
   a) Install lower arm (1) to rear suspension frame.
   b) Insert suspension lower arm inner bolt (2) from the vehicle rearward.
   c) Install lower arm washer (3) with its graduated part facing up.
   d) The marks (4) on lower arm washer (3) and rear suspension frame marked before its removal must be aligned and, tighten bolt and nut temporarily by hand.

**⚠ CAUTION**

**If reuse lower arm mount nut, apply engine oil to thread and bearing.**

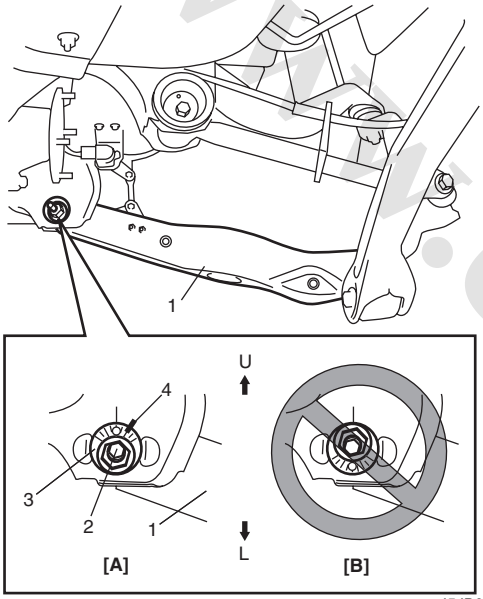

I5JB0A230035-01

| | |
|---|---|
| [A]: Correct | U: Upper side |
| [B]: Wrong | L: Lower side |

2) Install rear coil spring referring to “Rear Coil Spring and Bump Stopper Removal and Installation: ”.
3) Install wheel with nuts and lower vehicle.
4) Tighten wheel nuts to specified torque.

   **Tightening torque**
   **Wheel nut: 100 N·m (10.0 kgf-m, 72.5 lb-ft)**

5) Tighten lower arm outer bolt and lower arm mount nut, shock absorber bolts to specified torque with vehicle weight on suspension.

**⚠ CAUTION**

- **It is the most desirable to have vehicle off hoist and in non-loaded condition when tightening them.**
- **Tighten lower arm washer with match marks aligned.**

**Tightening torque**
**Lower arm outer bolt: 135 N·m (13.5 kgf-m, 98.0 lb-ft)**
**Lower arm mount nut: 135 N·m (13.5 kgf-m, 98.0 lb-ft)**
**Shock absorber upper bolt: 60 N·m (6.0 kgf-m, 43.5 lb-ft)**
**Shock absorber lower bolt: 90 N·m (9.0 kgf-m, 65.0 lb-ft)**

6) Check rear toe and camber adjust it as necessary. For check and adjustment procedures, refer to “Rear Wheel Alignment Inspection and Adjustment: ”.
7) Adjust headlight auto leveling system, refer to “Initialization of Auto Leveling Headlight System: in Section 9B”.

## Lower Arm / Bushing Disassembly and Assembly

S5JB0A2306032

### Disassembly

1) Push out suspension lateral link bushing by using hydraulic press (1) and special tool.

   **Special tool**
   **(A): 09913–84510**

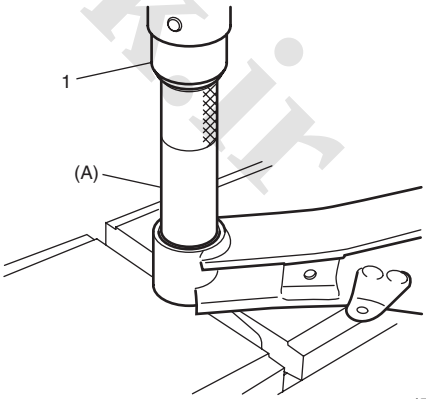

I5JB0A230036-02

www.cargeek.ir

www.CarGeek.ir


### Assembly

1) Press-fit suspension lateral link bushing (2) by using press (1) and special tool.

**⚠ CAUTION**

**Be sure to use new bushing.**

**Special tool**
**(A): 09913–85210**

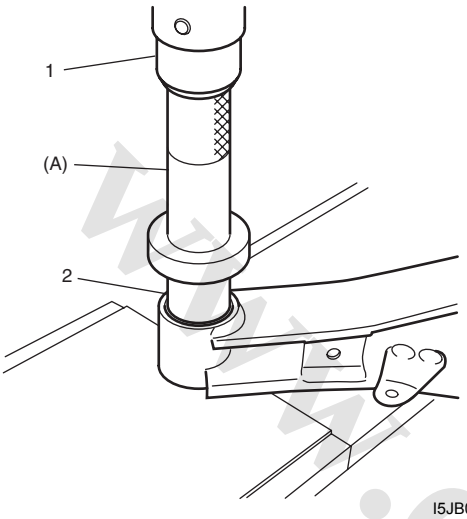


I5JB0A230083-01

2) Press-fit bushing (1) so that dimension “A” and “B” in figure become equal.

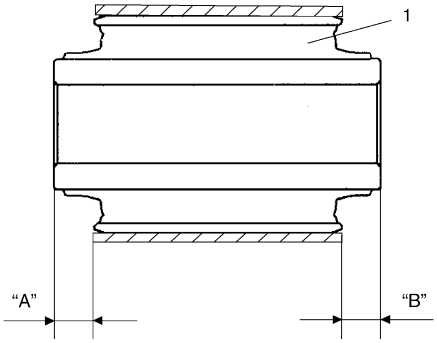


I5JB0A230037-02

## Lower Arm Check

S5JB0A2306033

- Inspect for cracks, deformation or damage.
- Inspect bushing for wear and breakage.

If any faulty condition is found, replace.

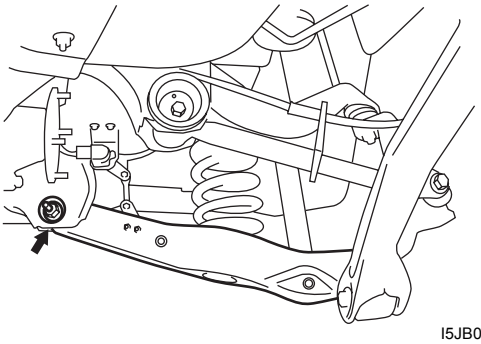

I5JB0A230038-01

## Upper Arm Removal and Installation

S5JB0A2306034

### Removal

1) Hoist vehicle and remove rear wheels.
2) Remove control rod refer to “Control Rod Removal and Installation: ”.
3) Remove trailing rod refer to “Trailing Rod Removal and Installation: ”.
4) Remove lower arm refer to “Lower Arm Removal and Installation: ”.
5) Remove rear suspension knuckle refer to “Rear Suspension knuckle Removal and Installation: ”.
6) Remove wheel sensor bolts (1) from upper arm (2).

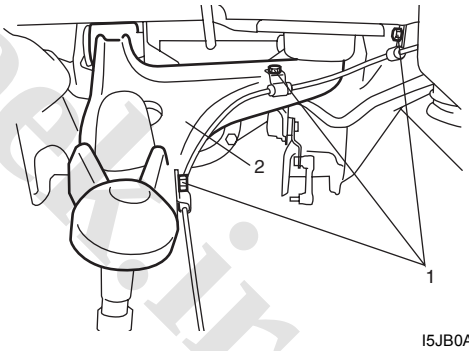


I5JB0A230039-01

7) Remove upper arm bolts (1) and then upper arm (2).

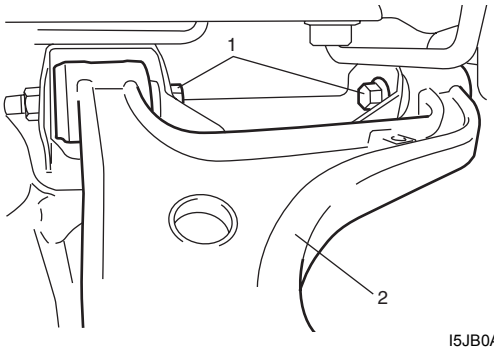


I5JB0A230040-01

www.cargeek.ir

www.CarGeek.ir

**Installation**

1) Install upper arm.
   a) Install upper arm (2) to rear suspension frame.
   b) Insert upper arm bolt (1) from the upper arm inside.
   c) Tighten upper arm mount nuts (3) temporarily by hand.

**⚠ CAUTION**

**If reuse upper arm mount nut, apply engine oil to thread and bearing.**

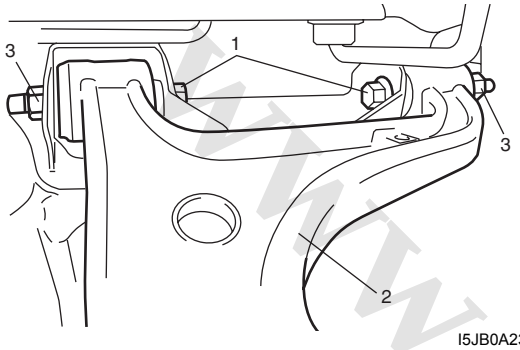

I5JB0A230041-01

2) Tighten wheel sensor bolts (1) to specified torque.

   **Tightening torque**
   **Wheel sensor bolt (a): 11 N·m (1.1 kgf-m, 8.0 lb-ft)**

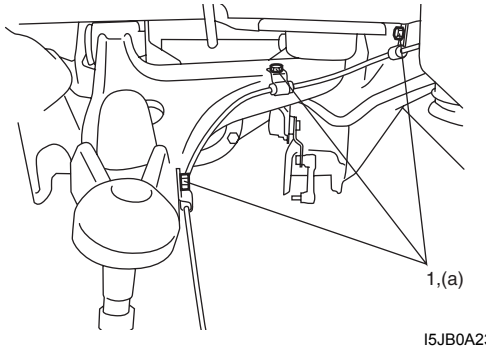

I5JB0A230042-01

3) Install rear suspension knuckle refer to “Rear Suspension knuckle Removal and Installation: ”.
4) Install trailing rod refer to “Trailing Rod Removal and Installation: ”.
5) Install control rod refer to “Control Rod Removal and Installation: ”.
6) Install lower arm refer to “Lower Arm Removal and Installation: ”.
7) Install rear wheels and lower hoist.
8) Tighten wheel nuts to specified torque.

   **Tightening torque**
   **Wheel nut: 100 N·m (10.0 kgf-m, 72.5 lb-ft)**

9) Tighten each bolts and nuts to specified torque with vehicle weight on suspension.

**⚠ CAUTION**

- **It is the most desirable to have vehicle off hoist and in non-loaded condition when tightening them.**
- **Tighten lower arm washer and control rod washer with match marks aligned.**

**Tightening torque**
**Upper arm mount nut: 135 N·m (13.5 kgf-m, 98.0 lb-ft)**
**Shock absorber upper bolt: 60 N·m (6.0 kgf-m, 43.5 lb-ft)**
**Shock absorber lower bolt: 90 N·m (9.0 kgf-m, 65.0 lb-ft)**
**Lower arm outer bolt: 135 N·m (13.5 kgf-m, 98.0 lb-ft)**
**Lower arm mount nut: 135 N·m (13.5 kgf-m, 98.0 lb-ft)**
**Control rod outer bolt: 135 N·m (13.5 kgf-m, 98.0 lb-ft)**
**Control rod mount nut: 135 N·m (13.5 kgf-m, 98.0 lb-ft)**
**Trailing rod rear bolt: 135 N·m (13.5 kgf-m, 98.0 lb-ft)**
**Trailing rod mount nut: 135 N·m (13.5 kgf-m, 98.0 lb-ft)**

10) Check rear toe and camber adjust it as necessary. For check and adjustment procedures, refer to “Rear Wheel Alignment Inspection and Adjustment: ”.
11) Adjust headlight auto leveling system, refer to “Initialization of Auto Leveling Headlight System: in Section 9B”.

www.cargeek.ir

www.CarGeek.ir


## Upper Arm / Bushing Disassembly and Assembly

S5JB0A2306035

### Disassembly

1) Cut rubber (1) of flange of upper arm bushing.
2) Using grinder (2), grind off flange (3) of upper arm bushing.

**⚠ CAUTION**

**Be careful not to damage upper arm (4) when grinding flange (3) of upper arm bushing with grinder.**

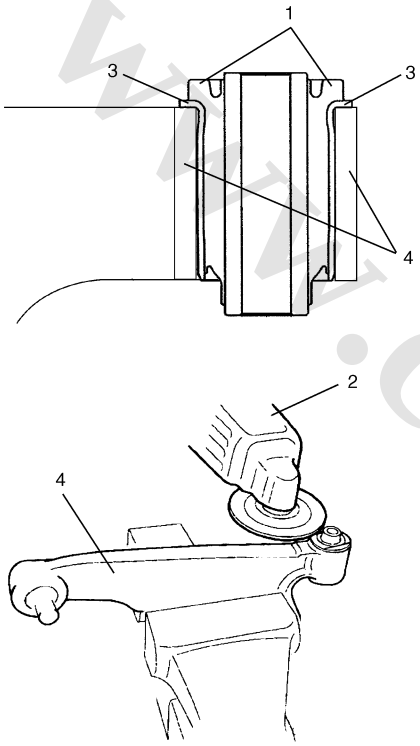


I5JB0A230043-01

3) Push out upper arm bushing by using hydraulic press (1) and special tool.

**Special tool**
**(A): 09913–68711**

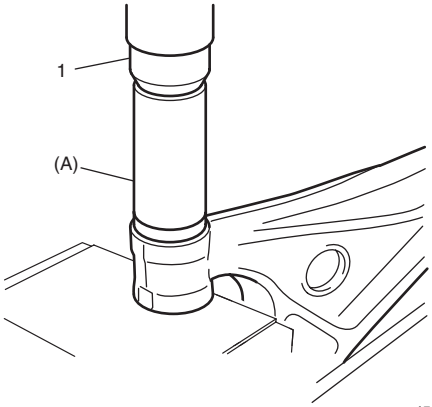


I5JB0A230044-02

### Assembly

**⚠ CAUTION**

**Apply grease (included in the repair kit) to ball joint and inside of ball stud boot when the ball stud boot is replaced.**

1) Press-fit upper arm bushing (2) by using press (1) and special tool.

**⚠ CAUTION**

**Be sure to use new bushing.**

**Special tool**
**(A): 09913–75510**

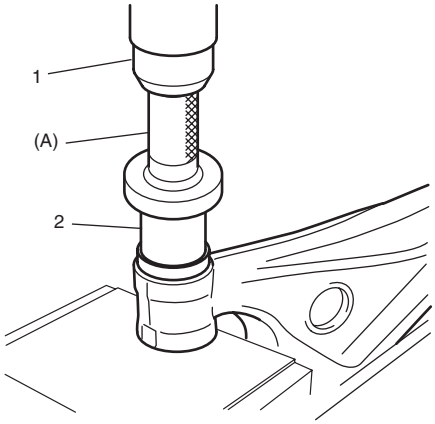


I5JB0A230084-01

## Upper Arm Check

S5JB0A2306036

- Inspect for cracks, deformation or damage.
- Inspect bushing for wear and breakage.

If any faulty condition is found, replace.

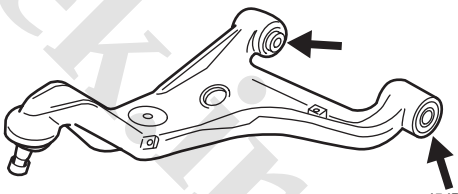

I5JB0A230045-01

www.cargeek.ir

www.CarGeek.ir

## Rear Suspension Frame Components

S5JB0A2306014

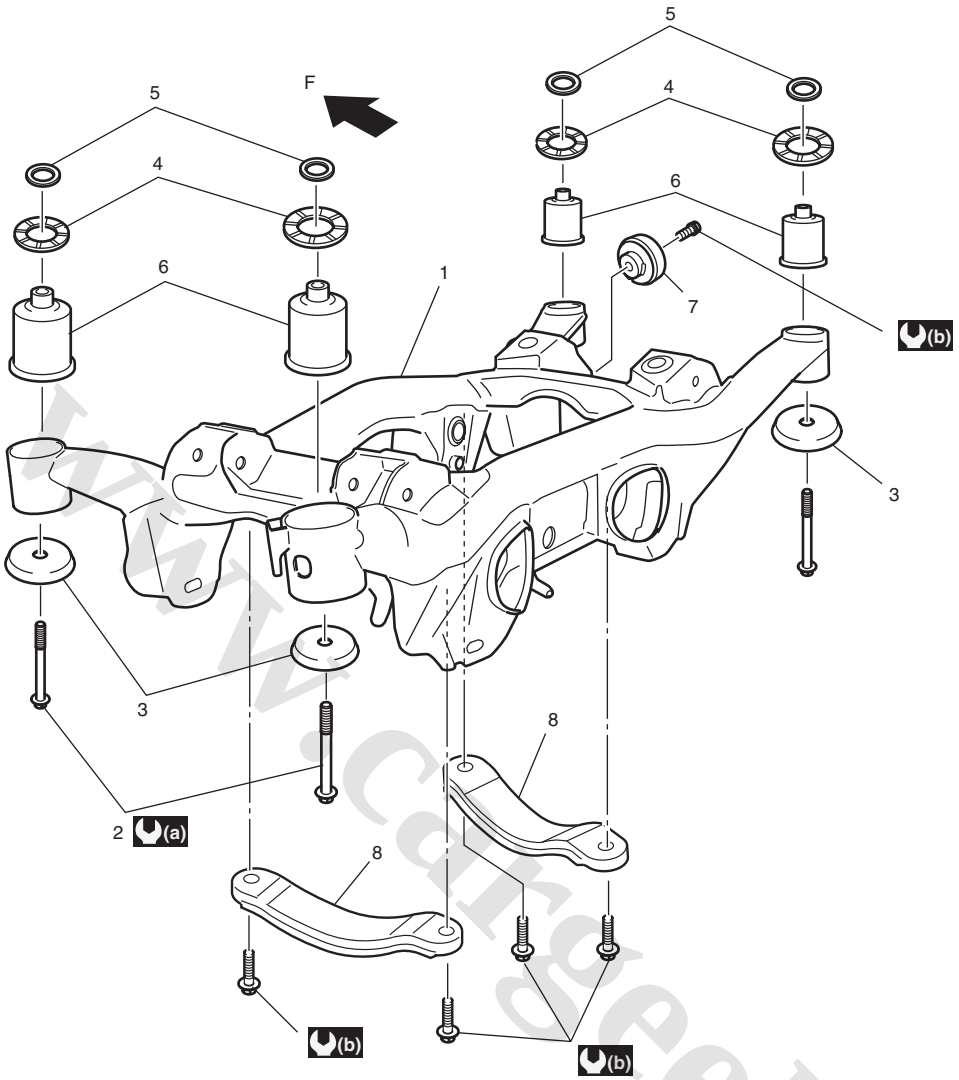


I5JB0A230046-03

| | | |
|---|---|---|
| F: Forward | 4. Rear suspension frame mount stopper | 8. Stiffener |
| 1. Rear suspension frame | 5. Upper mount stopper washer | (a) : 135 N·m (13.5 kgf-m, 98.0 lb-ft) |
| 2. Rear suspension frame mount bolt | 6. Rear suspension frame busing | (b) : 50 N·m (5.0 kgf-m, 36.5 lb-ft) |
| 3. Rear suspension frame mount washer | 7. Dynamic damper | |

www.cargeek.ir

www.CarGeek.ir


## Rear Suspension Frame Removal and Installation

S5JB0A2306015

### Removal

1) Hoist vehicle and remove rear wheels.
2) Remove muffler and exhaust center pipe referring to “Exhaust System Components: in Section 1K”.
3) To facilitate reinstallation, put match marks (1) on rear propeller shaft flange and differential flange. Disconnect rear propeller shaft form differential.

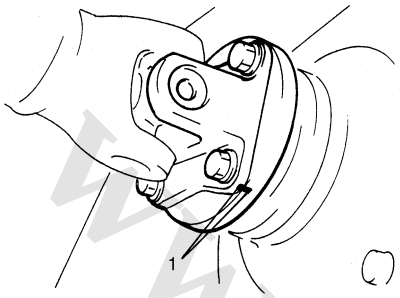


I3RH01232006-01

4) Remove rear wheel hub assembly referring to “Rear Wheel Hub Assembly Removal and Installation: ”.
5) Remove control rod referring to “Control Rod Removal and Installation: ”.
6) Remove trailing rod referring to “Trailing Rod Removal and Installation: ”.
7) Remove lower arm referring to “Lower Arm Removal and Installation: ”.
8) Remove rear drive shaft referring to “Rear Drive Shaft Assembly Removal and Installation: Rear in Section 3A”.
9) Remove rear suspension knuckle referring to “Rear Suspension knuckle Removal and Installation: ”.
10) Remove upper arm referring to “Upper Arm Removal and Installation: ”.
11) Remove parking cable clamp bolt (1) and parking cable clamp (2).

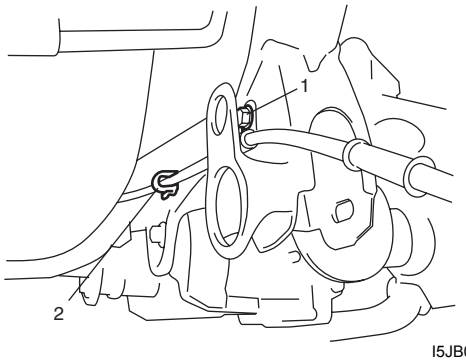


I5JB0A230047-01

12) Remove wheel sensor bolt (1) and ABS wheel sensor harness clamp (2) (if equipped).
13) Disconnect rear height sensor connector (3) and rear height sensor harness clamp (4) (if equipped) for left side.

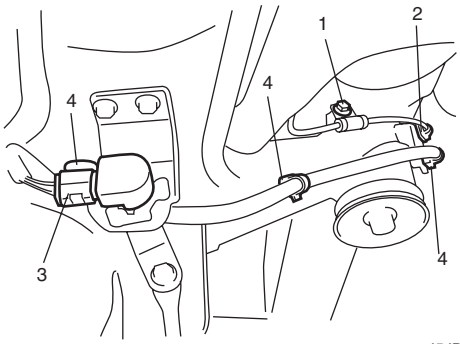


I5JB0A230048-01

14) Support rear suspension frame with rear differential by using mission jack (1).

**⚠ WARNING**

**When removing rear suspension frame, be sure to apply some supporting equipment (such as mission jack) under it at well-balanced position in the center section so as to prevent from its drop.**

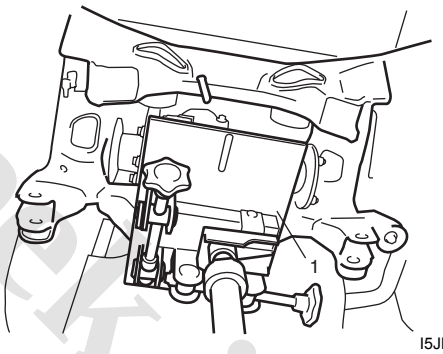


I5JB0A230049-01

15) Remove rear suspension frame mount bolts (1) and washer (2) and then lower mission jack and remove rear suspension frame (3) with rear differential and rear suspension frame stopper (4).

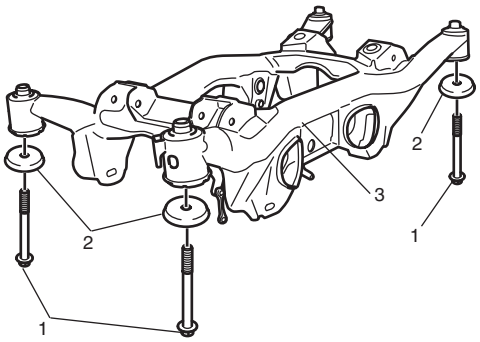


I5JB0A230050-03

16) Dismounting rear differential from rear suspension frame referring to “Rear Differential Unit Components: Rear in Section 3B”.

www.cargeek.ir

www.CarGeek.ir

**Installation**

1) Remounting rear differential to rear suspension fame referring to “Rear Differential Unit Components: Rear in Section 3B”.
2) Support rear suspension frame with rear differential by using mission jack, and jack up it.

**⚠ WARNING**

**When mounting rear suspension frame, be sure to apply some supporting equipment (such as mission jack) under it at well-balanced position in the center section so as to prevent from its drop.**

3) Install rear suspension frame (3) to vehicle body and tighten rear suspension frame mount bolts (1) with washer (2) to specified torque.

**⚠ CAUTION**

**If reuse suspension frame mount bolt, apply engine oil to thread, bearing and trunk surface.**

**Tightening torque**
**Rear suspension frame mount bolt (a): 135 N·m (13.5 kgf-m, 98.0 lb-ft)**

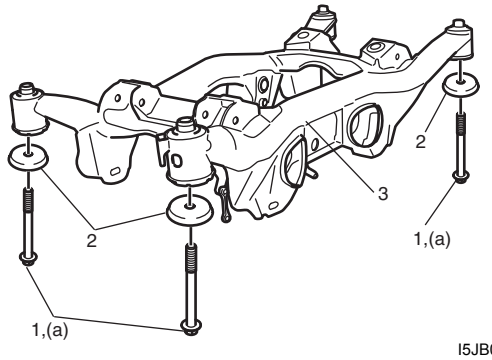

I5JB0A230051-02

4) Connect rear height sensor connector (3) and rear height sensor harness clamp (4) (if equipped) for left side.
5) Tighten wheel sensor bolt (1) to specified torque and then connect ABS wheel sensor harness clamp (2) (if equipped).

**Tightening torque**
**Wheel sensor bolt (a): 11 N·m (1.1 kgf-m, 8.0 lb-ft)**

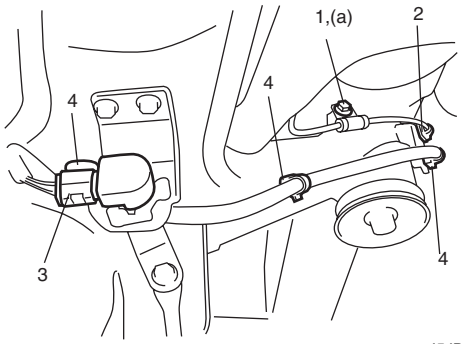

I5JB0A230052-01

6) Tighten parking cable clamp bolt (1) to specified torque and then connect parking cable clamp (2).

**Tightening torque**
**Parking cable clamp bolt (a): 25 N·m (2.5 kgf-m, 18.0 lb-ft)**

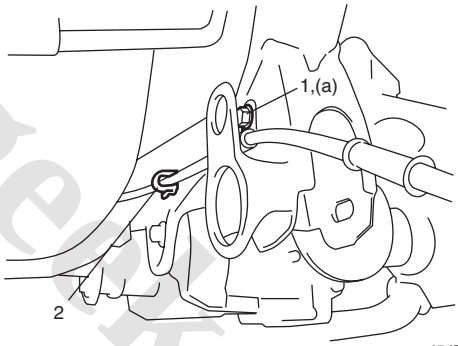

I5JB0A230053-01

7) Install upper arm referring to “Upper Arm Removal and Installation: ”.
8) Install rear suspension knuckle referring to “Rear Suspension knuckle Removal and Installation: ”.
9) Install rear drive shaft referring to “Rear Drive Shaft Assembly Removal and Installation: Rear in Section 3A”.
10) Install lower arm referring to “Lower Arm Removal and Installation: ”.
11) Install trailing rod referring to “Trailing Rod Removal and Installation: ”.

www.cargeek.ir

www.CarGeek.ir


12) Install control rod referring to “Control Rod Removal and Installation: ”“Control Rod Removal and Installation: ”.
13) Install rear wheel hub assembly referring to “Rear Wheel Hub Assembly Removal and Installation: ”.
14) Connect rear propeller shaft to differential aligning match marks on flanges. Tighten bolts and nuts to specified torque. Refer to “Propeller Shaft Removal and Installation: in Section 3D”.
15) Install exhaust muffler and exhaust center pipe referring to “Exhaust System Components: in Section 1K”.
16) Fill reservoir with brake fluid and bleed brake system. Refer to “Air Bleeding of Brake System: in Section 4A”.
17) Upon completion of all jobs, depress brake pedal with about 30 kg (66 lbs) load three to five times so as to obtain proper drum-to-shoe clearance. Adjust parking brake cable. Refer to “Parking Brake Check and Adjustment: in Section 4D”.
18) Install rear wheels.
19) Check to ensure that brake drum is free from dragging and proper braking is obtained.
20) Lower hoist and tighten rear wheel bolts to specified torque.

    **Tightening torque**
    **Wheel nut: 100 N·m (10.0 kgf-m, 72.5 lb-ft)**

21) Bounce vehicle up and down to stabilize suspension.
22) Tighten each bolts and nuts to specified torque with vehicle weight on suspension.

    **NOTE**

    **It is the most desirable to have vehicle off hoist and in non-loaded condition when tightening them.**

23) Perform brake test (foot brake and parking brake).
24) Check each installed part for fluid leakage.
25) Check rear toe and camber and adjust it if necessary. For check and adjustment procedures, refer to “Rear Wheel Alignment Inspection and Adjustment: ”.
26) Adjust headlight auto leveling system, referring to “Initialization of Auto Leveling Headlight System: in Section 9B”.

## Rear Suspension frame / Bushing Disassembly and Assembly

S5JB0A2306037

### Disassembly

1) Cut rubber (1) of flange of rear suspension frame bushing.
2) Using grinder (2), grind off flange (3) of upper arm bushing.

    ⚠ **CAUTION**

    **Be careful not to damage rear suspension frame bushing (4) when grinding flange (3) of upper arm bushing with grinder.**

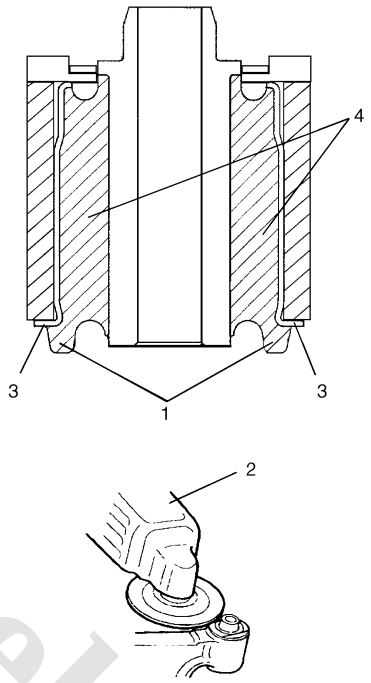


I5JB0A230054-02

3) Push out rear suspension frame bushing by using hydraulic press (1) and special tool.

    **Special tool**
    **(A): 09913–75520**

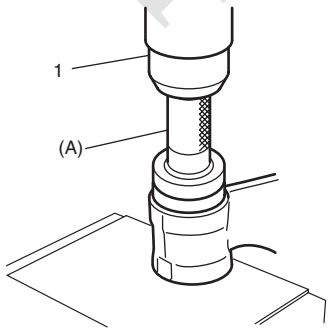


I5JB0A230055-02

www.cargeek.ir

www.CarGeek.ir

### Assembly

1) Press-fit rear suspension frame bushing (2) by using press (1) and special tool.

**⚠ CAUTION**

**Be sure to use new bushing.**

**Special tool**
**(A): 09913–75510**

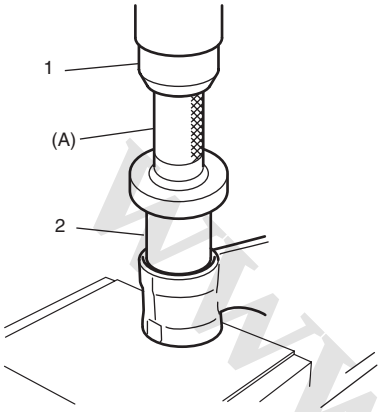


I5JB0A230085-01

2) Install rear suspension frame stopper (3) to rear suspension frame bushing (1) and press-fit upper mount stopper washer (2) by using press with bearing installer.

**⚠ CAUTION**

**Be sure to use new upper mount stopper washer and rear suspension frame stopper.**

**NOTE**

**Use bearing installer in dimensions of outer diameter 43.0 to 49.0 mm (1.69 to 1.92 in.), inner diameter 41.0 mm (1.61 in.) or more and length 21.0 mm (0.82 in.) or more.**

**Clearance "a" between washer and bushing**
**"a": 1.5 mm (0.059 in.)**

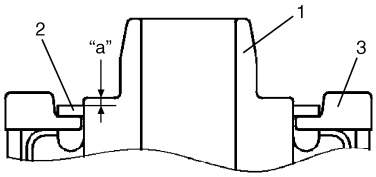


I5JB0A230080-01

### Rear Suspension Frame, Bushing and Pad Check

S5JB0A2306017

Inspect for cracks, deformation or damage. If any faulty condition is found, replace.

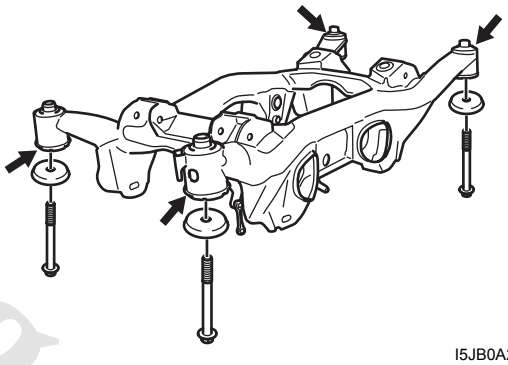

I5JB0A230056-02

### Rear Wheel Hub Assembly and Rear Suspension Knuckle Components

S5JB0A2306038

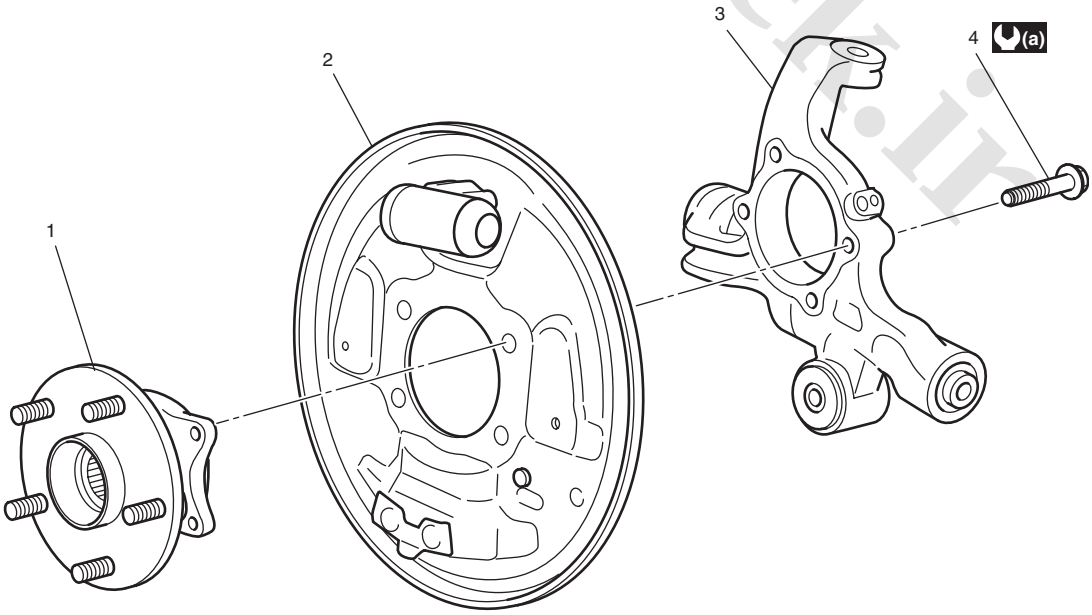


I5JB0A230057-01

| | | |
|---|---|---|
| 1. Rear wheel hub assemble | 3. Rear suspension knuckle | (a) : 50 N·m (5.0 kgf-m, 36.5 lb-ft) |
| 2. Back plate | 4. Rear wheel hub housing bolt | |

www.cargeek.ir

www.CarGeek.ir


## Rear Wheel Hub Assembly Removal and Installation

S5JB0A2306039

### Removal

1) Hoist vehicle and remove rear wheels.
2) Uncaulk rear axle nut (1).
3) Pull up parking brake lever fully and remove rear axle nut (1).

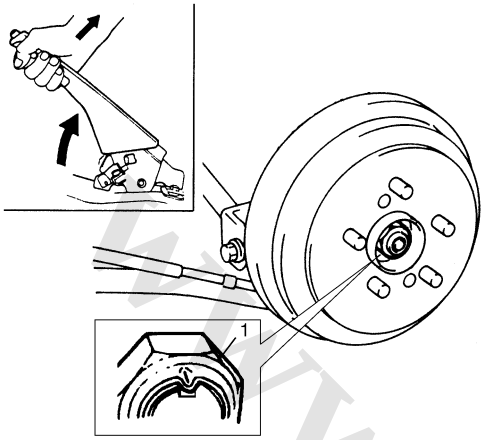


I5JB0A230058-01

4) Remove rear break shoe referring to “Rear Brake Shoe Removal and Installation: in Section 4C”.
5) Disconnect brake pipe (1) from wheel cylinder (2) and put wheel cylinder bleeder plug cap (3) onto pipe to prevent fluid from spilling.

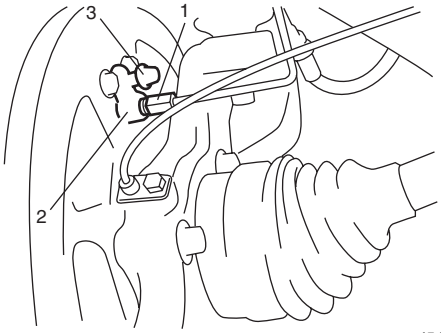


I5JB0A230059-01

6) Loosen parking cable cap nut (1).

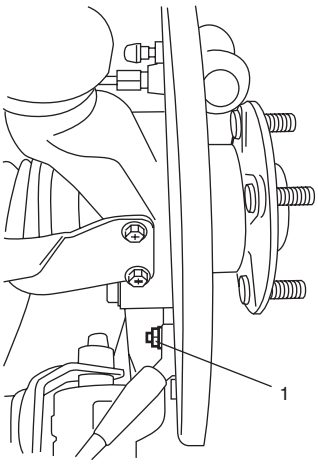


I5JB0A230060-01

7) Removal rear wheel hub housing bolts (1) and then remove rear wheel hub assembly and back plate.

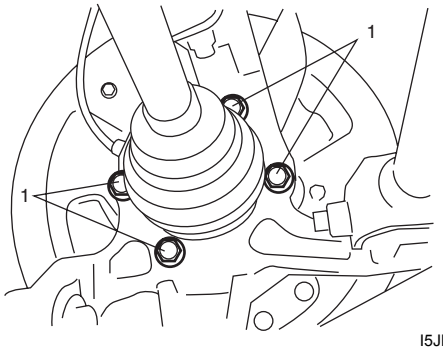


I5JB0A230061-01

8) Refer to Step 7) of “Front Wheel Hub Assembly Removal and Installation: in Section 2B” to remove hub bolts since the rear wheel hub assembly is the same as the front wheel hub assembly.

### Installation

1) Refer to Step 1) of “Front Wheel Hub Assembly Removal and Installation: in Section 2B” to install hub bolts since the rear wheel hub assembly is the same as the front wheel hub assembly.
2) Apply grease to end face of inner ring (2) before rear wheel hub (1) installation.

**⚠ CAUTION**

**Do not apply the grease to the encoder section to avoid the encoder malfunction.**

**“A”: Grease 99000–25010 (SUZUKI Super Grease A)**

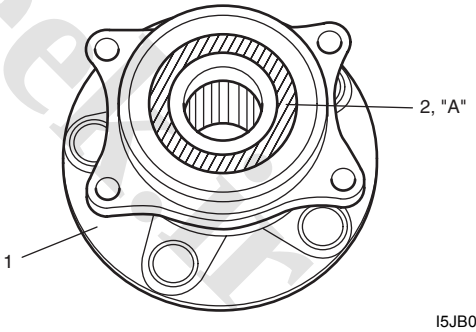


I5JB0A220018-01

www.cargeek.ir

www.CarGeek.ir

3) Install rear wheel assembly and back plate to rear suspension knuckle and tighten rear wheel hub housing bolts (1) to specified torque.

**Tightening torque**
**Rear wheel hub housing bolt (a): 50 N·m (5.0 kgf-m, 36.5 lb-ft)**

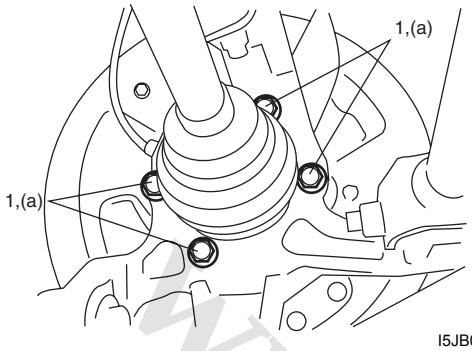

I5JB0A230062-01

4) Tighten parking cable cap nut (1) to specified torque.

**Tightening torque**
**Parking cable cap nut (a): 11 N·m (1.1 kgf-m, 8.0 lb-ft)**

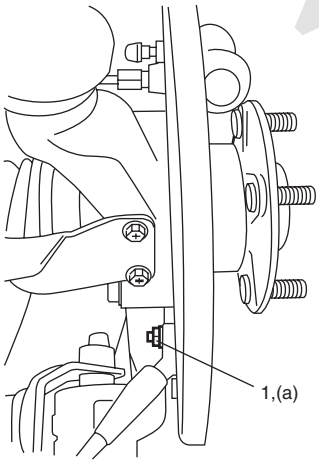

I5JB0A230063-01

5) Connect brake pipe (1) to wheel cylinder (2) and tighten brake pipe flare nut (1) to specified torque and install bleeder plug cap (3) taken off pipe back to bleeder plug.

**Tightening torque**
**Brake pipe flare nut (a): 16 N·m (1.6 kgf-m, 11.5 lb-ft)**

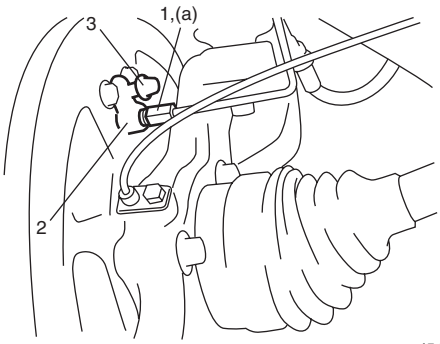

I5JB0A230064-01

6) Install rear break shoe referring to “Rear Brake Shoe Removal and Installation: in Section 4C”.

7) Pull up parking brake lever fully and tighten new rear axle nut (1) to specified torque.

**Tightening torque**
**Rear axle nut (a): 200 N·m (20.0 kgf-m, 145.0 lb-ft)**

8) Caulk rear axle nut (1).

**⚠ CAUTION**

**Be careful while calking nut so that no crack will occur in calked part of nut. Cracked nut must be replaced with new one.**

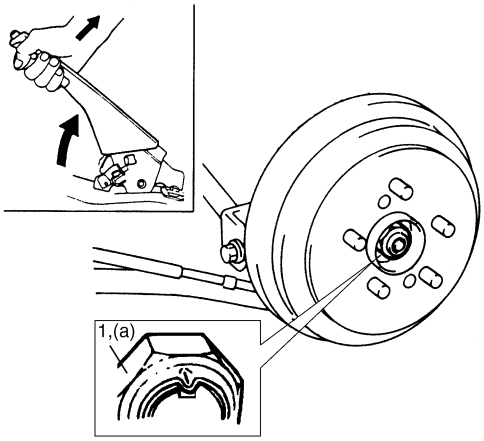

I5JB0A230065-01

9) Fill reservoir with brake fluid and bleed brake system. Refer to “Air Bleeding of Brake System: in Section 4A”.

10) Upon completion of all jobs, depress brake pedal with about 30 kg (66 lbs) load three to five times so as to obtain proper drum-to-shoe clearance. Adjust parking brake cable. Refer to “Parking Brake Check and Adjustment: in Section 4D”.

11) Install rear wheels.

12) Check to ensure that brake drum is free from dragging and proper braking is obtained.

13) Lower hoist and tighten rear wheel bolts to specified torque.

**Tightening torque**
**Wheel nut: 100 N·m (10.0 kgf-m, 72.5 lb-ft)**

14) Perform brake test (foot brake and parking brake).

15) Check each installed part for fluid leakage.

www.cargeek.ir

www.CarGeek.ir


## Rear Wheel Hub Assembly, Wheel Bearing and Wheel Stud Inspection

S5JB0A2306020

- Wheel bearing and wheel hub form a solid unit.
- When wheel bearing is found defective and its replacement is necessary, replace hub assembly.

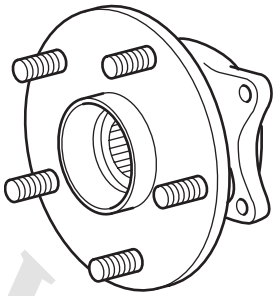

I5JB0A230066-01

## Rear Wheel Disc, Nut and Bearing Check

S5JB0A2306021

- Inspect each wheel disc for dents, distortion and cracks.
  A disc in badly damaged condition must be replaced.
- Check wheel nuts for tightness and, as necessary, retighten to specification.

  **Tightening torque**
  **Wheel nut (a): 100 N·m (10.0 kgf-m, 72.5 lb-ft)**

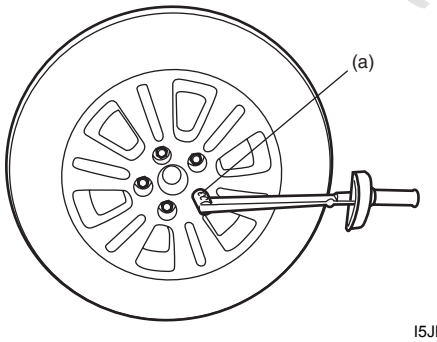


I5JB0A220029-01

- Check wheel bearings for wear. When measuring thrust play, apply a dial gauge to spindle cap center. If thrust play exceeds limit, replace bearing.

  **Thrust play limit**
  **"a": 0.1 mm (0.004 in.)**

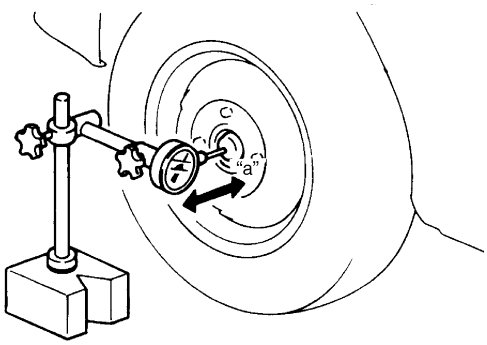


I2RH01230011-01

- By rotating wheel actually, check wheel bearing for noise and smooth rotation. If it is defective, replace bearing.

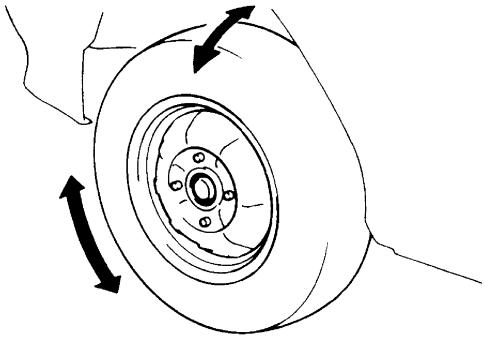

I2RH01230012-01

www.cargeek.ir

www.CarGeek.ir

## Rear Suspension knuckle Removal and Installation

S5JB0A2306040

### Removal

1) Hoist vehicle and remove rear wheels.
2) Remove rear wheel hub assembly referring to “Rear Wheel Hub Assembly Removal and Installation: ”.
3) Remove ABS wheel sensor (1) (if equipped).

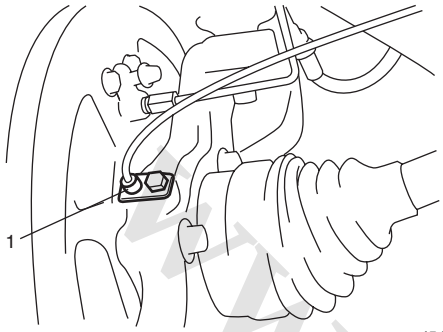


I5JB0A230067-01

4) Loosen rear brake hose bracket bolt (1).

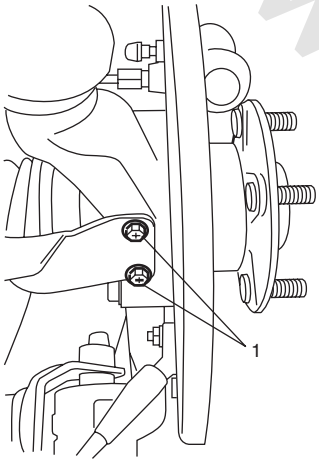


I5JB0A230068-01

5) Support lower arm (1) with jack (2).

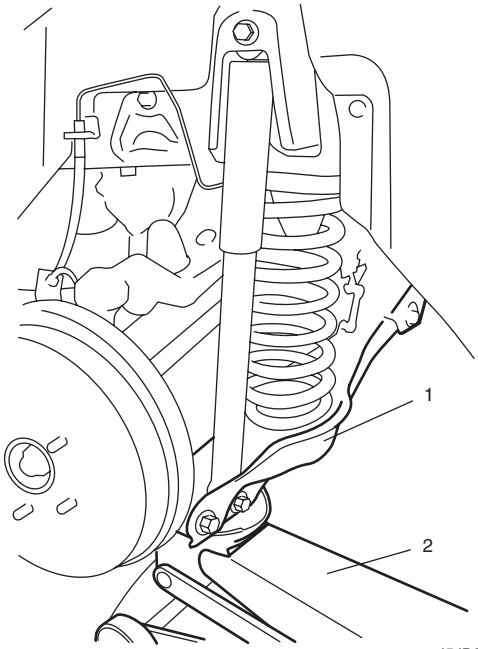


I5JB0A230018-01

6) Loosen control rod outer bolt (1).

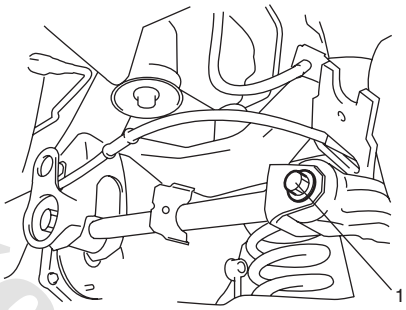


I5JB0A230069-01

7) Loosen trailing rod rear bolt (1).

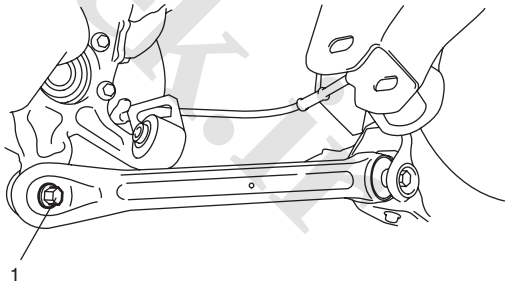


I5JB0A230070-01

www.cargeek.ir

www.CarGeek.ir


8) Loosen lower arm outer bolt (1).

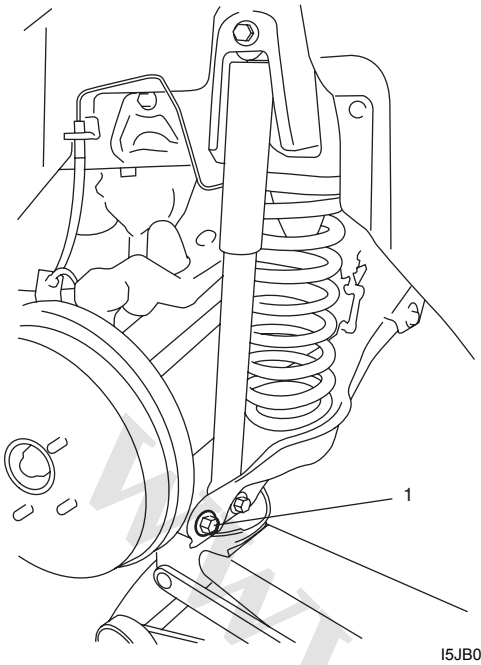


I5JB0A230071-01

9) Disconnect upper arm joint from rear suspension knuckle (1) with puller (2) and remove rear suspension knuckle.

**NOTE**

**Do not remove upper arm joint nut (3) to avoid the rear suspension knuckle fall off.**

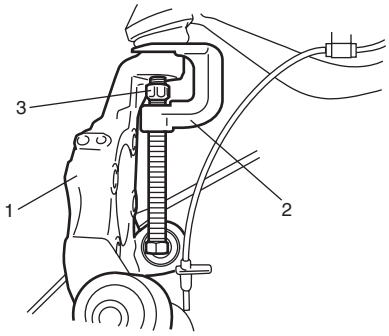


I5JB0A230072-01

**Installation**

1) Connect upper arm joint (2) to rear suspension knuckle (1).
2) Tighten new upper arm joint nut (3) to specified torque.

**⚠ CAUTION**

**Do not reuse removed upper arm joint nut.**

**Tightening torque**
**Upper arm joint nut (a): 55 N·m (5.5 kgf-m, 40.0 lb-ft)**

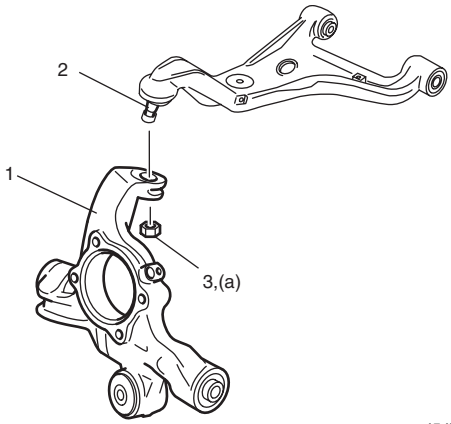


I5JB0A230073-01

3) Install lower arm to rear suspension knuckle and then tighten lower arm outer bolt (1) temporarily by hand.

**⚠ CAUTION**

**If reuse lower arm outer bolt, apply engine oil to thread, bearing and trunk surface.**

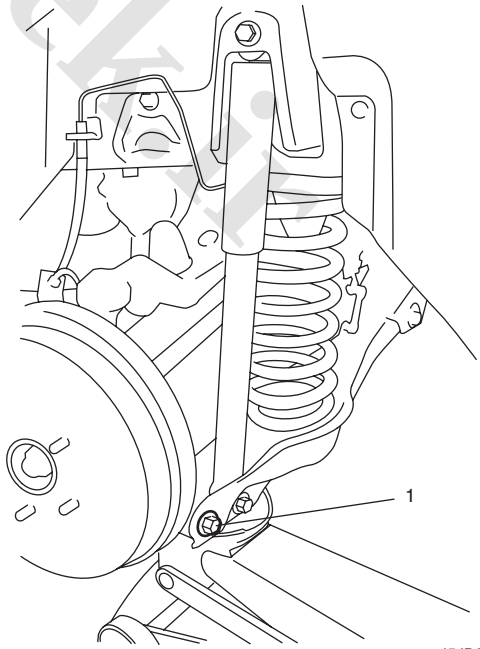


I5JB0A230071-01

www.cargeek.ir

www.CarGeek.ir

4) Install trailing rod to rear suspension knuckle and then tighten trailing rod rear bolt (1) temporarily by hand.

**⚠ CAUTION**

**If reuse trailing rod rear bolt, apply engine oil to thread, bearing and trunk surface.**

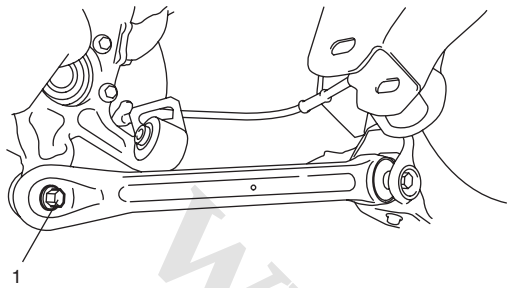


I5JB0A230070-01

5) Install control rod to rear suspension knuckle tighten control rod outer bolt (1) temporarily by hand.

**⚠ CAUTION**

**If reuse control rod outer bolt, apply engine oil to thread, bearing and trunk surface.**

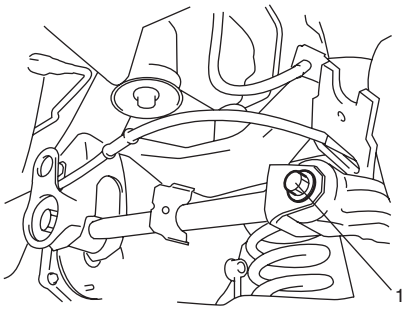


I5JB0A230069-01

6) Remove floor jack from lower arm.

7) Install rear brake hose bracket (1) and then tighten rear brake hose bracket bolt (2) to specified torque.

**Tightening torque**
**Rear brake hose bracket bolt (a): 11 N·m (1.1 kgf-m, 8.0 lb-ft)**

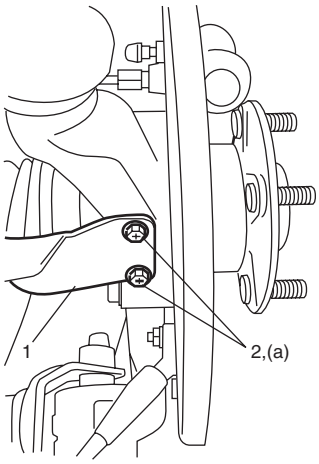


I5JB0A230074-01

8) Install ABS wheel sensor (1) (if equipped) and then tighten wheel sensor bolt (2) to specified torque.

**Tightening torque**
**Wheel sensor bolt (a): 11 N·m (1.1 kgf-m, 8.0 lb-ft)**

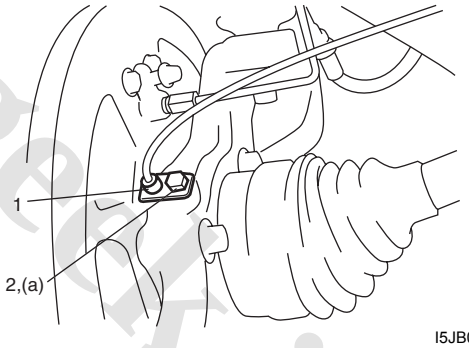


I5JB0A230075-01

9) Install rear wheel hub assembly referring to “Rear Wheel Hub Assembly Removal and Installation: ”.

10) Fill reservoir with brake fluid and bleed brake system. Refer to “Air Bleeding of Brake System: in Section 4A”.

www.cargeek.ir

www.CarGeek.ir


11) Upon completion of all jobs, depress brake pedal with about 30 kg (66 lbs) load three to five times so as to obtain proper drum-to-shoe clearance. Adjust parking brake cable. Refer to “Parking Brake Check and Adjustment: in Section 4D”.
12) Install rear wheels.
13) Check to ensure that brake drum is free from dragging and proper braking is obtained.
14) Lower hoist and tighten rear wheel bolts to specified torque.

    **Tightening torque**
    **Wheel nut: 100 N·m (10.0 kgf-m, 72.5 lb-ft)**

15) Bounce vehicle up and down to stabilize suspension.
16) Tighten each bolts to specified torque with vehicle weight on suspension.

    **NOTE**

    **It is the most desirable to have vehicle off hoist and in non-loaded condition when tightening them.**

    **Tightening torque**
    **Lower arm outer bolt: 135 N·m (13.5 kgf-m, 98.0 lb-ft)**
    **Trailing rod rear bolt: 135 N·m (13.5 kgf-m, 98.0 lb-ft)**
    **Control rod outer bolt: 135 N·m (13.5 kgf-m, 98.0 lb-ft)**

17) Perform brake test (foot brake and parking brake).
18) Check each installed part for fluid leakage.
19) Check rear toe and camber adjust it as necessary. For check and adjustment procedures, refer to “Rear Wheel Alignment Inspection and Adjustment: ”.

## Rear Suspension Knuckle Check

S5JB0A2306024

- Inspect for cracks, deformation or damage.
- Inspect bushing for damage, wear or breakage. If any faulty condition is found, replace rear suspension knuckle assembly.

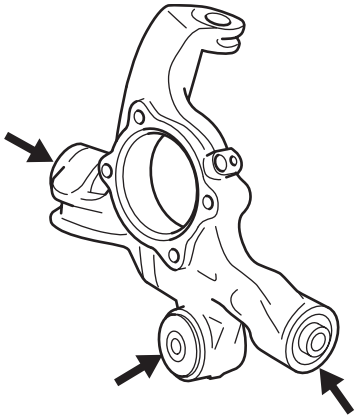

I5JB0A230078-01

## Rear Suspension Fasteners Check

S5JB0A2306025

Check each bolt and nut fastening suspension parts for tightness. Tighten loose one, if any, to specified torque referring to the figure in “Rear Suspension Construction: ”.

www.cargeek.ir

www.CarGeek.ir

# Specifications

## Tightening Torque Specifications

S5JB0A2307001

| Fastening part | Tightening torque | | | Note |
|---|---|---|---|---|
| | N·m | kgf-m | lb-ft | |
| Control rod mount nut | 135 | 13.5 | 98.0 | ☞ / ☞ / ☞ |
| Lower arm mount nut | 135 | 13.5 | 98.0 | ☞ / ☞ / ☞ / ☞ |
| Shock absorber upper bolt | 60 | 6.0 | 43.5 | ☞ / ☞ / ☞ / ☞ |
| Shock absorber lower bolt | 90 | 9.0 | 65.0 | ☞ / ☞ / ☞ / ☞ |
| Wheel nut | 100 | 10.0 | 72.5 | ☞ / ☞ / ☞ / ☞ / ☞ / ☞ / ☞ / ☞ / ☞ |
| Bump stopper | 50 | 5.0 | 36.5 | ☞ |
| Lower arm outer bolt | 135 | 13.5 | 98.0 | ☞ / ☞ / ☞ / ☞ |
| Parking cable hanger bolt | 10 | 1.0 | 7.5 | ☞ |
| Control rod outer bolt | 135 | 13.5 | 98.0 | ☞ / ☞ / ☞ |
| Trailing rod mount bolt | 105 | 10.5 | 76.0 | ☞ |
| Trailing rod mount nut | 135 | 13.5 | 98.0 | ☞ / ☞ |
| Trailing rod rear bolt | 135 | 13.5 | 98.0 | ☞ / ☞ / ☞ |
| Wheel sensor bolt | 11 | 1.1 | 8.0 | ☞ / ☞ / ☞ |
| Upper arm mount nut | 135 | 13.5 | 98.0 | ☞ |
| Rear suspension frame mount bolt | 135 | 13.5 | 98.0 | ☞ |
| Parking cable clamp bolt | 25 | 2.5 | 18.0 | ☞ |
| Rear wheel hub housing bolt | 50 | 5.0 | 36.5 | ☞ |
| Parking cable cap nut | 11 | 1.1 | 8.0 | ☞ |
| Brake pipe flare nut | 16 | 1.6 | 11.5 | ☞ |
| Rear axle nut | 200 | 20.0 | 145.0 | ☞ |
| Upper arm joint nut | 55 | 5.5 | 40.0 | ☞ |
| Rear brake hose bracket bolt | 11 | 1.1 | 8.0 | ☞ |

**NOTE**

**The specified tightening torque is also described in the following.**
**“Rear Suspension Construction: ”**
**“Rear Shock Absorber and Rear Coil Spring Components: ”**
**“Rod and Arm Components: ”**
**“Rear Suspension Frame Components: ”**
**“Rear Wheel Hub Assembly and Rear Suspension Knuckle Components: ”**

**Reference:**
For the tightening torque of fastener not specified in this section, refer to “Fastener Information: in Section 0A”.

www.cargeek.ir

www.CarGeek.ir


# Special Tools and Equipment

## Recommended Service Material

S5JB0A2308001

| Material | SUZUKI recommended product or Specification | | Note |
|---|---|---|---|
| Grease | SUZUKI Super Grease A | P/No.: 99000–25010 | ☞ |

**NOTE**

**Required service material is also described in the following.**
**“Rear Shock Absorber and Rear Coil Spring Components: ”**

## Special Tool

S5JB0A2308002

| | |
|---|---|
| 09913–68711<br>Pinion bearing attachment<br>☞ 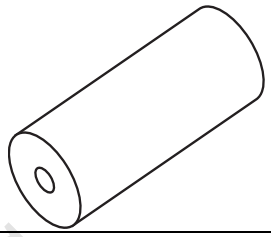 | 09913–75510<br>Bearing installer<br>☞ / ☞ 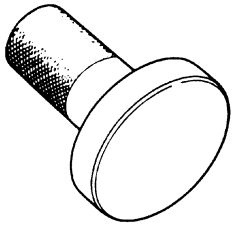 |
| 09913–75520<br>Bearing installer<br>☞ 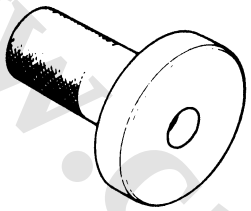 | 09913–84510<br>Bearing installer<br>☞ / ☞ 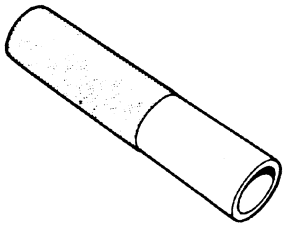 |
| 09913–85210<br>Bearing installer<br>☞ / ☞ 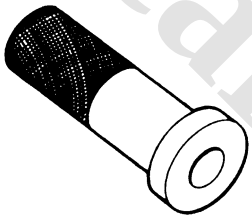 | 09941–66010<br>Bump stopper rubber wrench<br>☞ / ☞ 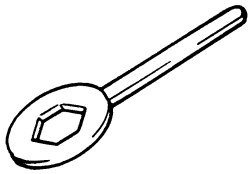 |
| 09945–56510<br>Trailing rod bush remover<br>☞ / ☞ 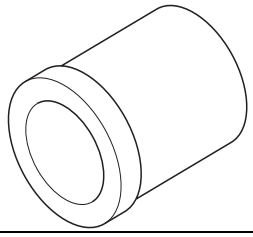 | |

www.cargeek.ir

www.CarGeek.ir

# Wheels and Tires

## General Description

### Tires Description

S5JB0A2401001

The tire is of tubeless type. The tire is designed to operate satisfactorily with loads up to the full rated load capacity when inflated to the recommended inflation pressures.
Correct tire pressures and driving habits have an important influence on tire life. Heavy cornering, excessively rapid acceleration, and unnecessary sharp braking increase tire wear.

### Tire Placard

The “Tire Placard” is located on the left or right door lock pillar and should be referred to tire information.
The placard lists the maximum load, tire size and cold tire pressure where applicable.

**NOTE**

**Whether rim size and/or maximum load are listed or not depends on regulations of each country.**

### Inflation of Tires

The pressure recommended for any model is carefully calculated to give a satisfactory ride, stability, steering, tread wear, tire life and resistance to bruises.
Tire pressure, with tires cold, (after vehicle has set for 3 hours or more, or driven less than one mile) should be checked monthly or before any extended trip. Set to the specifications on the “Tire Placard” located on the left or right door lock pillar.
It is normal for tire pressure to increase when the tires become hot during driving.
Do not bleed or reduce tire pressure after driving. Bleeding reduces the “Cold Inflation Pressure”.

**Higher than recommended pressure can cause:**

- Hard ride
- Tire bruising or carcass damage
- Rapid tread wear at center of tire

**Unequal pressure on same axle can cause:**

- Uneven braking
- Steering lead
- Reduced handling
- Swerve on acceleration

**Lower than recommended pressure can cause:**

- Tire squeal on turns
- Hard Steering
- Rapid and uneven wear on the edges of the tread
- Tire rim bruises and rupture
- Tire cord breakage
- High tire temperature
- Reduced handling
- High fuel consumption

**Matched Tires and Wheels (Steel Type)**

Tires and wheels are match mounted at the assembly plant.
This means that the radially stiffest part of the tire, or “high spot”, is matched to the smallest radius or “low spot” of the wheel.
This is done to provide the smoothest possible ride.
The “high spot” of the tire is originally marked by paint dot (1) on the outboard sidewall. This paint dot will eventually wash off the tire.
The “low spot” of the wheel is originally marked by paint dot (2) on the wheel rim-flange. Properly assembled, the wheel rims’ paint dot should be aligned with the tires’ paint dot as shown in figure.

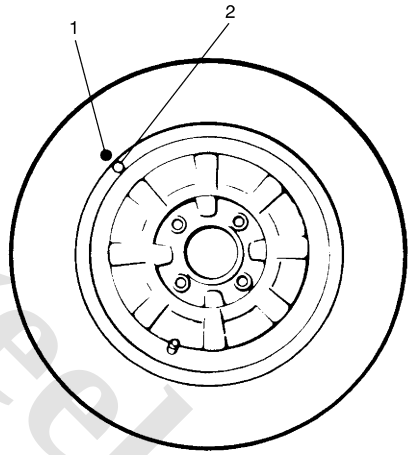


I2RH01240001-01

Whenever a tire is dismounted from its wheel, it should be remounted so that the tire and wheel are matched. If the tire’s paint dot cannot be located, a line should be scribed on the tire and wheel before dismounting to assure that it is remounted in the same position.

**Replacement Tires**

When replacement is necessary, the original equipment type tire should be used. Refer to the “Tire Placard”.
Replacement tires should be of the same size, load range and construction as those originally on the vehicle.
Use of any other size or type tire may affect ride, handling, speedometer / odometer calibration, vehicle ground clearance and tire or snow chain clearance to the body and chassis.
It is recommended that new tires be installed in pairs on the same axle. If necessary to replace only one tire, it should be paired with the tire having the most tread, to equalize braking traction.

www.cargeek.ir

www.CarGeek.ir


**⚠ WARNING**

**Do not mix different types of tires on the same vehicle such as radial, bias and bias-belted tires except in emergencies, because handling may be seriously affected and may result in loss of control.**

The metric term for tire inflation pressure is the kilo pascal (kPa). Tire pressures is usually printed in both kPa and kgf/cm$^2$ on the “Tire Placard”.
Metric tire gauges are available from tool suppliers.
The chart, shown the table, converts commonly used inflation pressures from kPa to kgf/cm$^2$ and psi.

| | kPa | kgf/cm$^2$ | psi | bar |
|---|---|---|---|---|
| Conversion: | 160 | 1.6 | 23 | 1.6 |
| 1 psi = | 180 | 1.8 | 26 | 1.8 |
| 6.895 kPa | 200 | 2.0 | 29 | 2.0 |
| 1 kgf/cm$^2$ = | 220 | 2.2 | 32 | 2.2 |
| 98.066 kPa | 240 | 2.4 | 35 | 2.4 |
| 1bar = | 260 | 2.6 | 38 | 2.6 |
| 100 kpa | 280 | 2.8 | 41 | 2.8 |
| | 300 | 3.0 | 44 | 3.0 |

## Wheels Description

S5JB0A2401002

### Wheel Maintenance

Wheel repairs that use welding, heating, or peening are not approved. All damaged wheels should be replaced.

### Replacement Wheels

Wheels must be replaced if they are bent, dented, have excessive lateral or radial runout, air leak through welds, have elongated bolt holes, if lug nuts won’t stay tight, or if they are heavily rusted. Wheels with greater runout than shown in the following may cause objectional vibrations.
Replacement wheels must be equivalent to the original equipment wheels in load capacity, diameter, rim with offset and mounting configuration. A wheel of improper size or type may affect wheel and bearing life, brake cooling, speedometer / odometer calibration, vehicle ground clearance and tire clearance to body and chassis.

### How to Measure Wheel Runout

To measure the wheel runout, it is necessary to use an accurate dial indicator. The tire may be on or off the wheel. The wheel should be installed to the wheel balancer of the like for proper measurement.
Take measurements of both lateral runout “a” and radial runout “b” at both inside and outside of the rim flange.
With the dial indicator set in place securely, turn the wheel one full revolution slowly and record every reading of the indicator.
When the measured runout exceeds the specification and correction by the balancer adjustment is impossible, replace the wheel. If the reading is affected by welding, paint or scratch, it should be ignored.

**Wheel Runout**

| | Lateral runout limit | Radial runout limit |
|---|---|---|
| **Steel wheel** | **1.20 mm (0.047 in.)** | **0.70 mm (0.027 in.)** |
| **Aluminum wheel** | **0.30 mm (0.011 in.)** | **0.30 mm (0.011 in.)** |

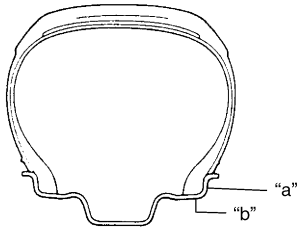


I4RS0A240001-01

### Metric Lug Nuts and Wheel Studs

All models use metric lug nuts and wheel studs.

**Metric lug nuts and wheel studs size**
**M12 x 1.25**

If a broken stud is found, see “Front Wheel Hub, Disc, Nut and Bearing Check: in Section 2B”, “Rear Wheel Disc, Nut and Bearing Check: in Section 2C”, “Front Wheel Hub Assembly Removal and Installation: in Section 2B” and/or “Rear Wheel Hub Assembly Removal and Installation: in Section 2C”, for Note and Replacement procedure.

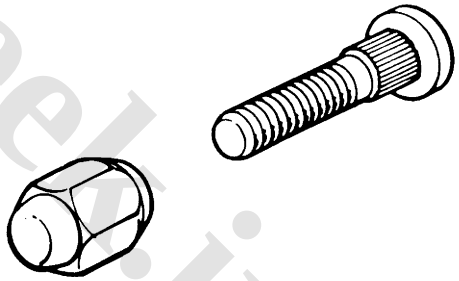

I2RH01240003-01

## Irregular and/or Premature Wear Description

S5JB0A2401003

Irregular and premature wear has many causes. Some of them are as follows: incorrect inflation pressures, lack of tire rotation, driving habits, improper alignment.
If the following conditions are noted, rotation is necessary:

- Front tire wear is different from rear.
- Uneven wear exists across the tread of any tire.
- Both side of front tire wears are not even.
- Both side of rear tire wears are not even.
- There is cupping, flat spotting, etc.

A wheel alignment check is necessary if following conditions are noted:

- Both side of front tire wears are not even.

www.cargeek.ir

www.CarGeek.ir

- Wear is uneven across the tread of any front tire.
- Front tire treads have scuffed appearance with “feather” edges on one side of tread ribs or blocks.

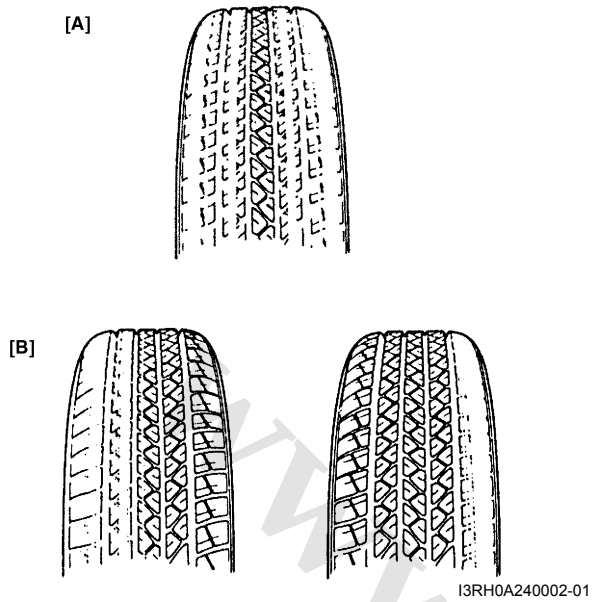


I3RH0A240002-01

| | |
|---|---|
| [A]: | Hard Cornering, under inflation or lack of tire rotation |
| [B]: | Incorrect wheel alignment, tire construction not uniform or wheel heavy acceleration |

## Wear Indicators Description

S5JB0A2401004

Original equipment tires have built-in tread wear indicators (1) to show when they need replacement. These indicators (1) will appear as 12 mm (0.47 in) wide bands when the tire tread depth becomes 1.6 mm (0.063 in).
When the indicators (1) appear in 3 or more grooves at 6 locations, tire replacement is recommended.

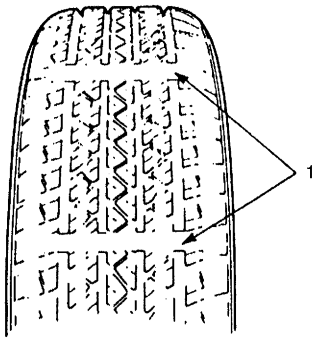


I2RH01240005-01

## Radial Tire Waddle Description

S5JB0A2401005

Waddle is side to side movement at the front and/or rear of the vehicle. It is caused by the steel belt not being straight within the tire. It is most noticeable at a low speed, 8 to 48 kph (5 to 30 mph).
It is possible to locate the faulty tire by road testing the vehicle. If it is on the rear, the rear end of the vehicle shakes from side to side or “waddles”. To the driver in the seat, it feels as though someone is pushing on the side of vehicle.
If the faulty tire is on the front, waddling is more visual. The front sheet metal appears to be moving back and forth and the driver feels as though he is at the pivot point in vehicle.
Waddle can be quickly diagnosed by using Tire Problem Detector (TPD) and following the equipment manufacture’s recommendations.
If TPD is not available, an alternative method of substituting known-good tire / wheel assemblies can be used as follows, although it takes a longer time.

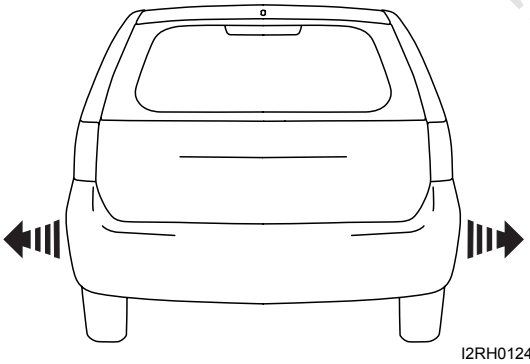

I2RH01240006-01

1) Ride vehicle to determine whether the front or rear waddles.
2) Install tires and wheels that are known to be good (on similar vehicle) in place of those on waddling end of vehicle. If waddling end cannot be identified, substitute rear ones.
3) Road test again. If improvement is noted, reinstall originals one at a time till waddle causal tire is found. If no improvement is noted, install known-good tires in place of all four. Then reinstall originals in the same manner.

www.cargeek.ir

**Equipment manufacture's recommendations**

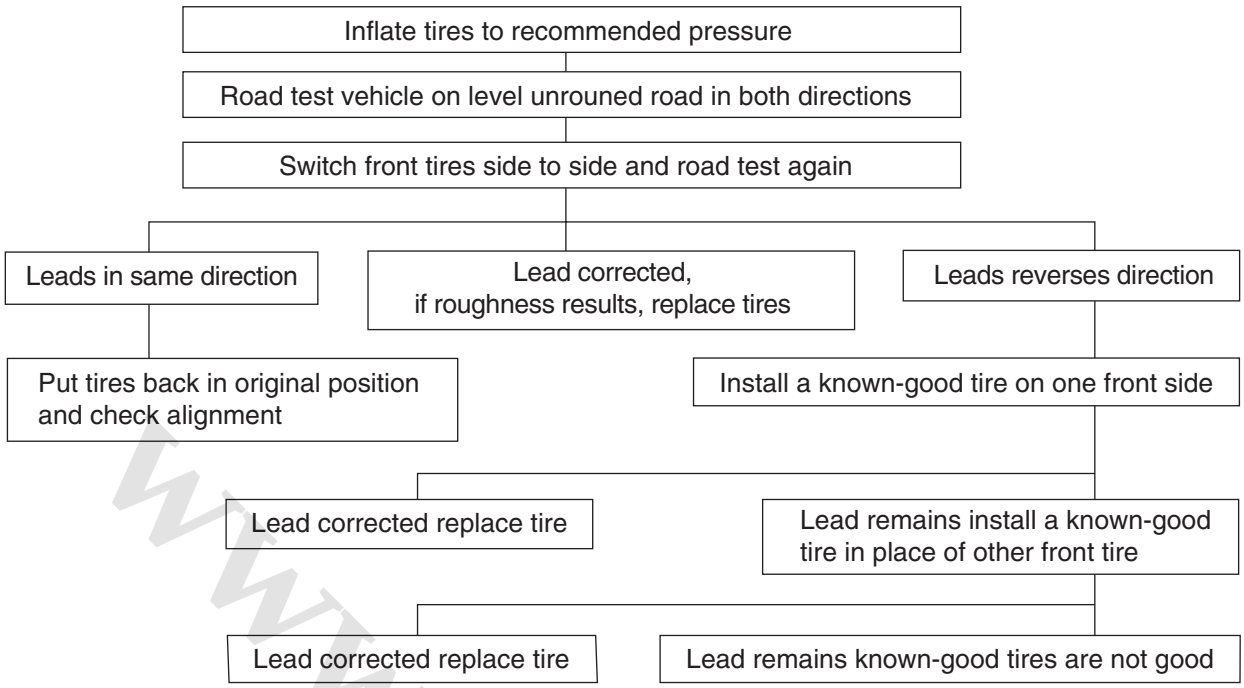


I2RH01240007-01

## Radial Tire Lead / Pull Description

S5JB0A2401006

"Lead / Pull" is the deviation of the vehicle from a straight path on a level road even with no pressure on the steering wheel.
Lead is usually caused by the following conditions.

- Improper tire and wheel alignment.
- Uneven brake assemblies.
- Tire construction.

The way in which a tire is built can produce lead in a vehicle. An example of this is placement of the belt. Off center belts on radial tires can cause the tire to develop a side force while rolling straight down the road. If one side of the tire has a little larger diameter than the other, the tire will tend to roll to one side. This will develop a side force which can produce vehicle lead.
The procedure in the figure (Lead Diagnosis) should be used to make sure that wheel alignment is not mistaken for tire lead.

- Part of the lead diagnosis procedure is different from the proper tire rotation pattern currently in the owner and service manuals. If a medium to high mileage tire is moved to the other side of the vehicle, be sure to check that ride roughness has not developed
- Rear tires will not cause lead.

## Balancing Wheels Description

S5JB0A2401007

There are two types of wheel and tire balance: static and dynamic. Static balance, as shown in figure, is the equal distribution of weight around the wheel. Wheels that are statically unbalanced cause a bouncing action called tramp. This condition will eventually cause uneven tire wear.

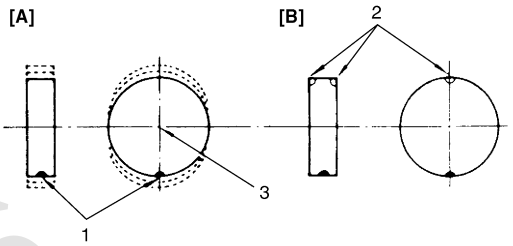


I2RH01240008-01

| | |
|---|---|
| 1. Heavy spot wheel tramp | [A]: Before correction |
| 2. Balance weights addition point | [B]: Corrective weights |
| 3. C/L of spindle | |

Dynamic balance, as shown in figure, is the equal distribution of weight on each side of the wheel centerline so that when the tire spins there is no tendency for the assembly to move from side to side. Wheels that are dynamically unbalanced may cause shimmy.

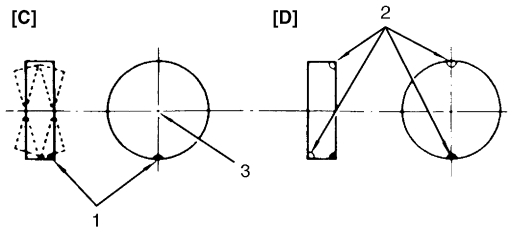


I2RH01240009-01

| | |
|---|---|
| 1. Heavy spot wheel shimmy | [C]: Before correction |
| 2. Balance weights addition point | [D]: Corrective weights |
| 3. C/L of spindle | |

www.CarGeek.ir

# Repair Instructions

## General Balance Procedures

S5JB0A2406001

Deposits of mud, etc. must be cleaned from inside of rim.

**⚠ WARNING**

**Stones should be removed from the tread in order to avoid operator injury during spin balancing and to obtain good balance.**

Each tire should be inspected for any damage, then balanced according to equipment manufacturer's recommendation.

### Off-Vehicle Balancing

Most electronic off-vehicle balancers are more accurate than the on-vehicle spin balancers. They are easy to use and give a dynamic (two plane) balance. Although they do not correct for drum or disc unbalance as does on-vehicle spin balancing, this is overcome by their accuracy, usually to within 1/8 ounce.

### On-Vehicle Balancing

On-vehicle balancing methods vary with equipment and tool manufacturers. Be sure to follow each manufacturer's instructions during balancing operation.

**⚠ WARNING**

**Wheel spin should be limited to 35 mph (55 km/h) as indicated on speedometer.**
**This limit is necessary because speedometer only indicates one-half of actual wheel speed when one drive wheel is spinning and the other drive wheel is stopped.**
**Unless care is taken in limiting drive wheel spin, spinning wheel can reach excessive speeds. This can result in possible tire disintegration or differential failure, which could cause serious personal injury or extensive vehicle damage.**

**⚠ CAUTION**

**For vehicle equipped with ABS, using on-vehicle balancing method with ignition switch ON may set malfunction diagnostic trouble code (DTC) of ABS even when system is in good condition.**
**Never turn ignition switch ON while spinning wheel.**

## Tire Rotation

S5JB0A2406002

To equalize wear, rotate tires according to figure. Radial tires should be rotated periodically. Set tire pressure.

**NOTE**

**Due to their design, radial tires tend to wear faster in the shoulder area, particularly in front positions. This makes regular rotation especially necessary.**

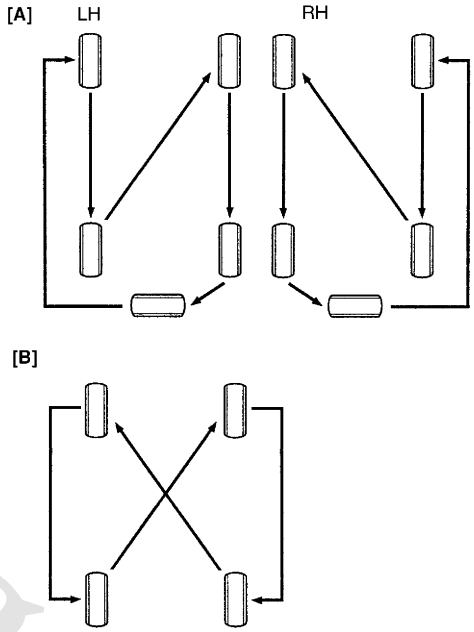


I3RH0A240001-01

| | |
|---|---|
| [A]: | 5-tire rotation<br>**NOTE**<br>**Applicable to vehicles equipped with 5 tires including spare tire all of which are identical in size** |
| [B]: | 4-tire rotation |
| LH: | Left-hand drive |
| RH: | Right-hand drive |

www.cargeek.ir

www.CarGeek.ir


## Wheel Removal and Installation

S5JB0A2406003

### Removal

1) Loosen wheel nuts by approximately 180 ° (half a rotation).
2) Hoist vehicle.
3) Remove wheel.

**⚠ CAUTION**

**Never use heat to loosen tight wheel because application of heat to wheel can shorten life of wheel and damage wheel bearings.**

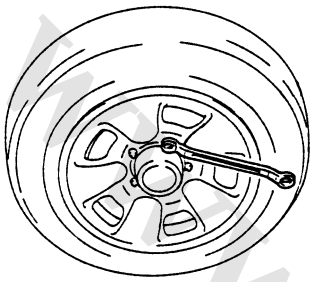

IYSQ01240007-01

### Installation

For installation, reverse removal procedure, noting the following.

- Wheel nuts must be tightened in sequence and to proper torque to avoid bending wheel or brake drum or brake disc as shown in the figure.

**NOTE**

**Before installing wheels, remove any build-up of corrosion on wheel mounting surface and brake disc mounting surface by scraping and wire brushing. Installing wheels without good metal-to-metal contact at mounting surfaces can cause wheel nuts to loosen, which can later allow a wheel to come off while vehicle is moving.**

**Tightening torque**
**Wheel nut (a): 100 N·m (10.0 kgf-m, 72.5 lb-ft)**

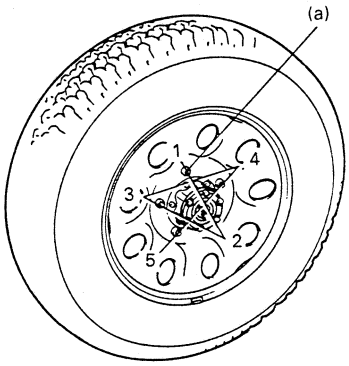


IYSQ01240008-01

## Tire Mounting and Dismounting

S5JB0A2406004

Use a tire changing machine to mount or dismount tires. Follow equipment manufacturer's instructions. Do not use hand tools or tire irons alone to change tires as they may damage tire beads or wheel rim.
Rim bead seats should be cleaned with a wire brush or coarse steel wool to remove lubricants, old rubber and light rust. Before mounting or dismounting a tire, bead area should be well lubricated with approved tire lubricant.
After mounting, inflate to specified pressure shown on tire placard so that beads are completely seated.

**⚠ WARNING**

**Do not stand over tire when inflating. Bead may break when bead snaps over rim's safety hump and cause serious personal injury.**
**Do not exceed specified pressure when inflating. If specified pressure will not seat beads, deflate, re-lubricate and reinflate.**
**Over inflation may cause bead to break and cause serious personal injury.**

Install valve core and inflate to proper pressure.

## Tire Repair

S5JB0A2406005

There are many different materials and techniques on the market to repair tires. As not all of these work on all types of tires, tire manufacturers have published detailed instructions on how and when to repair tires. These instructions can be obtained from each tire manufacturer.

www.cargeek.ir

www.CarGeek.ir

# Specifications

## Wheels and Tires Specifications

S5JB0A2407001

**Tire size (Standard)**
**225/70R16 102S or 225/65R17 101S**

**Wheel size (Standard)**
**16 x 6 1/2 J (for 225/70R16) or 17 x 6 1/2 J (for 225/65R17)**

**Tightening torque**
**Wheel nut: 100 N·m (10.0 kgf-m, 72.5 lb-ft)**

**NOTE**

- **Tire inflation pressure should be checked when tires are cool.**
- **Specified tire inflation pressure should be found on tire placard or in owner's manual which came with the vehicle.**

## Tightening Torque Specifications

S5JB0A2407002

| Fastening part | Tightening torque | | | Note |
|---|---|---|---|---|
| | N·m | kgf-m | lb-ft | |
| Wheel nut | 100 | 10.0 | 72.5 | ☞ / ☞ |

**Reference:**
For the tightening torque of fastener not specified in this section, refer to "Fastener Information: in Section 0A".

www.cargeek.ir

www.CarGeek.ir


# Section 3

# Driveline / Axle

## CONTENTS


**Precautions ..... 3-1**
**Precautions ..... 3-1**
Precautions for Driveline / Axle ..... 3-1

**Drive Shaft / Axle ..... 3A-1**
***Front ..... 3A-1***
**General Description ..... 3A-1**
Front Drive Shaft Construction ..... 3A-1
**Diagnostic Information and Procedures ..... 3A-1**
Front Drive Shaft Symptom Diagnosis ..... 3A-1
**Repair Instructions ..... 3A-2**
Front Drive Shaft Boot and Joint Check ..... 3A-2
Front Drive Shaft Components ..... 3A-2
Front Drive Shaft Assembly Removal and Installation ..... 3A-3
Front Drive Shaft Disassembly and Assembly ..... 3A-3
**Specifications ..... 3A-6**
Tightening Torque Specifications ..... 3A-6
**Special Tools and Equipment ..... 3A-6**
Recommended Service Material ..... 3A-6
Special Tool ..... 3A-6
***Rear ..... 3A-7***
**General Description ..... 3A-7**
Rear Drive Shaft Construction ..... 3A-7
**Repair Instructions ..... 3A-7**
Rear Drive Shaft Components ..... 3A-7
Rear Drive Shaft Assembly Removal and Installation ..... 3A-8
Rear Drive Shaft Disassembly and Assembly ..... 3A-8
**Specifications ..... 3A-9**
Tightening Torque Specifications ..... 3A-9
**Special Tools and Equipment ..... 3A-9**
Recommended Service Material ..... 3A-9
Special Tool ..... 3A-9

**Differential ..... 3B-1**
***Front ..... 3B-1***
**General Description ..... 3B-1**
Front Differential Construction ..... 3B-1
**Diagnostic Information and Procedures ..... 3B-1**
Front Differential Symptom Diagnosis ..... 3B-1
**Repair Instructions ..... 3B-2**
Front Differential Oil Change ..... 3B-2
Front Differential Unit Components ..... 3B-3
Front Differential Dismounting and Remounting ..... 3B-3
Front Differential Components ..... 3B-4
Front Differential Assembly Disassembly and Reassembly ..... 3B-5
Front Differential Inspection ..... 3B-17
**Specifications ..... 3B-18**
Tightening Torque Specifications ..... 3B-18
**Special Tools and Equipment ..... 3B-18**
Recommended Service Material ..... 3B-18
Special Tool ..... 3B-18
***Rear ..... 3B-21***
**General Description ..... 3B-21**
Rear Differential Construction ..... 3B-21
**Diagnostic Information and Procedures ..... 3B-21**
Rear Differential Symptom Diagnosis ..... 3B-21
**Repair Instructions ..... 3B-21**
Rear Differential Oil Change ..... 3B-21
Rear Differential Unit Components ..... 3B-21
Rear Differential Dismounting and Remounting ..... 3B-22
Rear Differential Components ..... 3B-23
Rear Differential Assembly Disassembly and Reassembly ..... 3B-24
Rear Differential Inspection ..... 3B-36
**Specifications ..... 3B-36**
Tightening Torque Specifications ..... 3B-36
**Special Tools and Equipment ..... 3B-37**
Recommended Service Material ..... 3B-37
Special Tool ..... 3B-37

**Transfer ..... 3C-1**
***Motor-Shift Type (Transfer with Shift Actuator) ..... 3C-1***
**Precautions ..... 3C-1**
Transfer Warning ..... 3C-1
Precautions in Diagnosing Trouble ..... 3C-1
**General Description ..... 3C-1**
Transfer Description ..... 3C-1
Transfer Shift Control System Components ..... 3C-2
4WD Control System Description ..... 3C-3
Function of 4WD Control System Component ..... 3C-5
4WD Control System Operation ..... 3C-5
4WD Control System Wiring Circuit Diagram ..... 3C-11
Terminal Arrangement of 4WD Control Module ..... 3C-12


3

www.cargeek.ir

www.CarGeek.ir

Input / Output Signal Table of 4WD Control Module ....3C-12
On-Board Diagnostic System Description....3C-12
CAN Communication System Description....3C-13
**Diagnostic Information and Procedures....3C-14**
4WD Control System Check ....3C-14
Transfer Position Indicator Operation Check ....3C-17
4WD Control System Operation Inspection ....3C-17
Visual Inspection ....3C-18
DTC Check....3C-19
DTC Clearance ....3C-20
DTC Table....3C-20
Fail-Safe Table....3C-21
Scan Tool Data ....3C-22
Scan Tool Data Definitions....3C-22
4WD Control Symptom Diagnosis....3C-23
Transfer Position Indicator Does Not Come ON at Ignition Switch ON but Engine Stops....3C-24
Transfer Position Indicator Remains ON Steady at Ignition Switch ON ....3C-26
DTC C1213: Transfer Switch Circuit Open ....3C-27
DTC C1214: Transfer Switch Circuit Short ....3C-28
DTC C1223 / C1235: Transfer Shift Actuator Motor Position Switch 1 Circuit Open / Transfer Shift Actuator Motor Position Switch 2 Circuit Open ....3C-30
DTC C1224 / C1236: Transfer Shift Actuator Motor Position Switch 1 Circuit Short / Transfer Shift Actuator Motor Position Switch 2 Circuit Short....3C-32
DTC C1227: 4L/N Switch Circuit Open....3C-34
DTC C1228: 4L/N Switch Circuit Short ....3C-35
DTC C1230: Transfer Actuator Circuit Malfunction....3C-37
DTC C1237: Center Differential Lock Switch Circuit Open ....3C-38
DTC C1238: Center Differential Lock Switch Circuit Short ....3C-40
DTC C1240: 4WD Control Module Power Supply Circuit Malfunction ....3C-41
DTC C1243: Internal Circuit Malfunction of 4WD Control Module....3C-42
DTC C1246: Clutch Pedal Position (CPP) Switch Circuit Short....3C-43
DTC U1073: Control Module Communication Buss Off ....3C-44
DTC U1100: Lost Communication with ECM....3C-46
DTC U1101: Lost Communication with TCM ....3C-48
DTC U1121: Lost Communication with ABS Hydraulic Unit / Control Module ....3C-50
Inspection of 4WD Control Module and Its Circuits ....3C-51
**Repair Instructions ....3C-54**
Transfer Oil Level Check....3C-54
Transfer Oil Change....3C-54
Transfer Oil Seal Removal and Installation....3C-55
Transfer Switch Removal and Installation....3C-55
Transfer Switch Inspection....3C-56
4WD Control Module Removal and Installation....3C-56
Transfer Assembly Dismounting and Remounting....3C-57
Transfer Assembly Components....3C-58
Transfer Assembly Disassembly and Reassembly ....3C-59
Transfer Assembly Inspection....3C-67
Input Gear Assembly, Counter Gear Assembly, Front Output Shaft Assembly and Rear Output Shaft Assembly Components....3C-69
Input Gear Assembly Disassembly and Reassembly ....3C-70
Counter Gear Assembly Disassembly and Reassembly ....3C-71
Front Output Shaft Assembly Disassembly and Reassembly ....3C-71
Rear Output Shaft Assembly Disassembly and Reassembly ....3C-72
**Specifications....3C-73**
Tightening Torque Specifications....3C-73
**Special Tools and Equipment ....3C-73**
Recommended Service Material ....3C-73
Special Tool ....3C-74
***Non-Shift Type (Transfer without Shift Actuator) ....3C-75***
**Precautions....3C-75**
Transfer Warning ....3C-75
**General Description ....3C-75**
Transfer Construction....3C-75
**Diagnostic Information and Procedures....3C-76**
Transfer Symptom Diagnosis....3C-76
**Repair Instructions ....3C-77**
Transfer Oil Change....3C-77
Transfer Oil Level Check....3C-77
Transfer Oil Seal Removal and Installation....3C-77
Transfer Assembly Dismounting and Remounting....3C-77
Transfer Assembly Components....3C-78
Transfer Assembly Disassembly and Reassembly ....3C-80
Input Gear Assembly Disassembly and Reassembly ....3C-86
Front Output Shaft Assembly Disassembly and Reassembly ....3C-86
Rear Output Shaft Assembly Disassembly and Reassembly ....3C-86
**Specifications....3C-87**
Tightening Torque Specifications....3C-87
**Special Tools and Equipment ....3C-87**
Recommended Service Material ....3C-87
Special Tool ....3C-87

**Propeller Shafts .... 3D-1**
**Precautions....3D-1**
Propeller Shaft Caution ....3D-1
**General Description ....3D-1**
Propeller Shaft Construction ....3D-1
**Diagnostic Information and Procedures....3D-2**
Propeller Shaft Symptom Diagnosis ....3D-2

www.cargeek.ir

www.CarGeek.ir


**Repair Instructions .....3D-2**
Propeller Shaft Joint Check .....3D-2
Propeller Shaft Removal and Installation.....3D-2
Propeller Shaft Disassembly and Assembly .....3D-3
Propeller Shaft Inspection.....3D-5
**Specifications.....3D-5**
Tightening Torque Specifications.....3D-5
**Special Tools and Equipment.....3D-6**
Recommended Service Material.....3D-6
Special Tool .....3D-6

www.cargeek.ir

www.cargeek.ir

www.CarGeek.ir

# Precautions

## Precautions

### Precautions for Driveline / Axle

S5JB0A3000001

**Differential Gear Oil Note**
Refer to “Differential Gear Oil Note:  in Section 00”.

**Fastener Caution**
Refer to “Fastener Caution:  in Section 00”.

**Precautions for Transfer**
Refer to “Precautions in Diagnosing Trouble: Motor-Shift Type (Transfer with Shift Actuator) in Section 3C”.

www.cargeek.ir

www.cargeek.ir

www.CarGeek.ir


# Drive Shaft / Axle

## Front

### General Description

#### Front Drive Shaft Construction

S5JB0A3111001

A constant velocity tripod joint is used on the differential side of both the right and left drive shaft assemblies. And, a constant velocity ball joint is used on the wheel side of both the right and left drive shaft assemblies. The drive shaft can slide through the tripod joint in the extension / contraction direction.

### Diagnostic Information and Procedures

#### Front Drive Shaft Symptom Diagnosis

S5JB0A3114001

| Condition | Possible cause | Correction / Reference Item |
|---|---|---|
| ***Abnormal noise: When starting*** | Loose wheel nut(s) | *Tighten wheel nut(s) referring to "Wheel Removal and Installation: in Section 2D".* |
| | Loose drive shaft flange bolt(s) | *Tighten drive shaft flange bolt(s) referring to "Front Drive Shaft Assembly Removal and Installation: Front".* |
| | Broken or damaged wheel bearing | *Replace referring to "Front Wheel Hub, Disc, Nut and Bearing Check: in Section 2B".* |
| ***Abnormal noise: When making turns*** | Grease leakage from boot | *Replace boot and apply grease referring to "Front Drive Shaft Disassembly and Assembly: Front".* |
| | Worn or broken drive shaft joint | *Replace drive shaft joint referring to "Front Drive Shaft Disassembly and Assembly: Front".* |
| ***Abnormal noise: When running*** | Broken drive shaft joint | *Replace drive shaft joint referring to "Front Drive Shaft Disassembly and Assembly: Front".* |
| | Poorly lubricated or worn joint | *Lubricate or replace joint referring to "Front Drive Shaft Disassembly and Assembly: Front".* |
| | Loose drive shaft flange bolt(s) | *Tighten drive shaft flange bolt(s) referring to "Front Drive Shaft Assembly Removal and Installation: Front".* |
| ***Vibration*** | Worn drive shaft joint | *Replace drive shaft joint referring to "Front Drive Shaft Disassembly and Assembly: Front".* |
| | Deformed drive shaft | *Replace referring to "Front Drive Shaft Disassembly and Assembly: Front".* |

www.cargeek.ir

www.CarGeek.ir

# Repair Instructions

## Front Drive Shaft Boot and Joint Check

S5JB0A3116001

- Check boot for tear. If even a small tear is found, replace with new one.

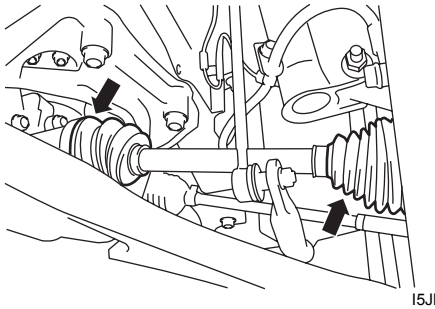

I5JB0A311001-01

- Check drive shaft joint for wear, breakage, and any other damage. Replace if any abnormality is found.

## Front Drive Shaft Components

S5JB0A3116002

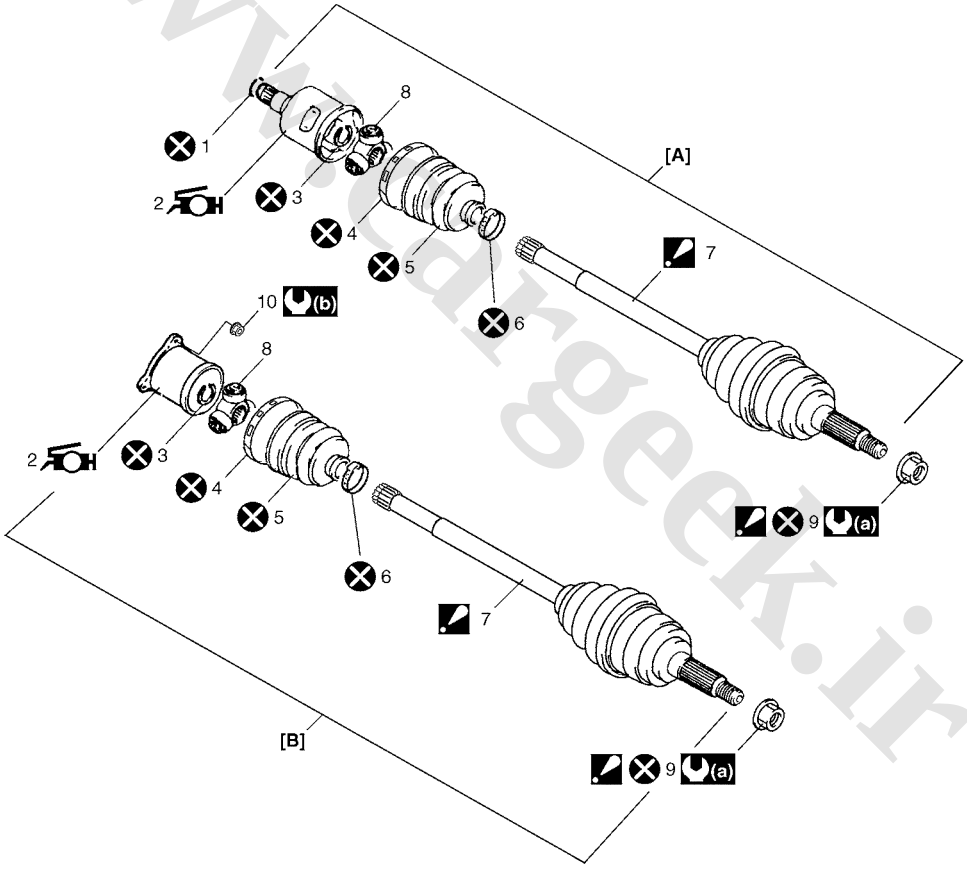


I5JB0A311002-03

| | | |
|---|---|---|
| [A]: Right side drive shaft assembly | 4. Boot band (Large) | 9. Drive shaft nut<br>: After tightening nut, caulk nut securely. |
| [B]: Left side drive shaft assembly | 5. Boot (Differential side) | 10. Front drive shaft flange nut |
| 1. Circlip | 6. Boot band (Small) | (a) : 200 N·m (20.0 kgf-m, 145.0 lb-ft) |
| 2. Differential side joint (Constant velocity tripod joint)<br>: Apply yellow grease included in spare part to joint. | 7. Wheel side joint assembly (Constant velocity ball joint)<br>: Never disassemble. | (b) : 80 N·m (8.0 kgf-m, 58.0 lb-ft) |
| 3. Snap ring | 8. Tripod joint spider | : Do not reuse. |

www.cargeek.ir

www.CarGeek.ir


## Front Drive Shaft Assembly Removal and Installation

S5JB0A3116003

### Removal

1) Undo caulking (1) and remove drive shaft nut (2).

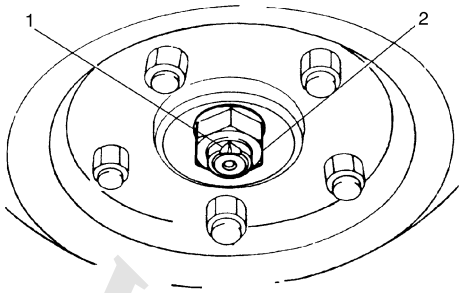


I5JB0A311003-01

2) Hoist vehicle and remove wheel.
3) Drain front differential oil.
4) Disconnect tie-rod end from steering knuckle referring to “Steering Knuckle Removal and Installation: in Section 2B”.
5) Remove stabilizer joint from stabilizer bar.
6) Remove brake hose mounting bolt.
7) Remove suspension control arm referring to “Suspension Control Arm Removal and Installation: in Section 2B”.
8) Remove front drive shaft flange nuts (1).

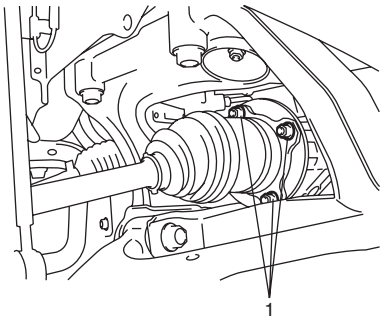


I5JB0A311004-01

9) Remove drive shaft assembly from front differential.

**⚠ CAUTION**

**To prevent breakage of boots (wheel side and differential side), do not contact them with other parts when removing drive shaft assembly.**

### Installation

**⚠ CAUTION**

- **Be careful not to damage oil seals and boots when installing drive shaft.**
- **Do not hit joint boot with hammer. Inserting joint only by hands is allowed.**
- **Make sure that differential side joint is inserted fully and its snap ring is seated as it was.**

Install drive shaft assembly by reversing removal procedure and noting the following points.

- Tighten each bolts and nuts to the specified torque referring to “Front Drive Shaft Components: Front” and “Front Suspension Construction: in Section 2B”.

## Front Drive Shaft Disassembly and Assembly

S5JB0A3116004

### Disassembly

**⚠ CAUTION**

- **Disassembly of wheel side joint assembly is not allowed. If any noise or damage exists in it, replace it as assembly.**
- **Do not disassemble tripod joint spider. If any malcondition is found in it, replace it as differential side joint assembly.**

1) Draw hooks (2) of boot big band together and remove differential side boot big band (1).

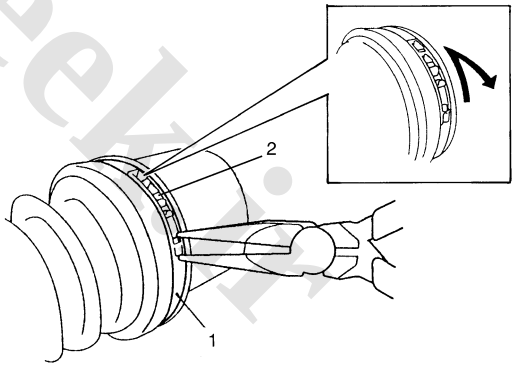


I5JB0A311005-01

www.cargeek.ir

www.CarGeek.ir

2) Wipe off grease from shaft and take off snap ring (1) using snap ring plier (2).

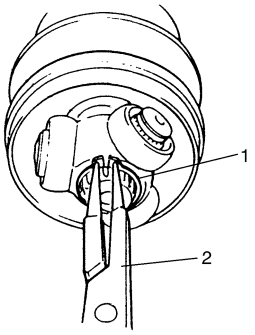


I5JB0A311008-01

3) Remove tripod joint spider (1) using 3 arms puller (2).

**⚠ CAUTION**

**To prevent any problem caused by washing solution, do not wash tripod joint except its housing. Degreasing of tripod joint with cloth is allowed.**

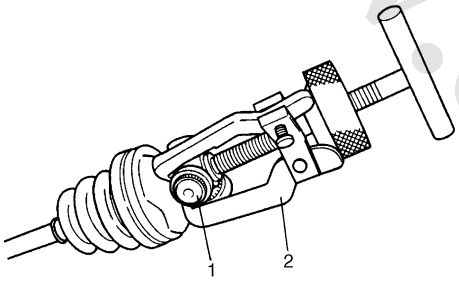


I3RH0A311004-01

4) Remove differential side boot small band, and then pull out differential side boot from shaft.

**Assembly**

Judging from abnormality noted before disassembly and what is found through visual check of component parts after disassembly, prepare replacing parts and proceed to reassembly.

Make sure that tripod joint housing is washed thoroughly and air dried.

Replace boot with new one.

**⚠ CAUTION**

- **Do not wash boots in degreaser such as gasoline or kerosene. etc. Washing in degreaser causes deterioration of boot.**
- **To ensure full performance of joint as designed, apply grease of specified volume and color to joint.**

1) Wash disassembled parts (except boots). After washing, dry parts completely by blowing air.
2) Clean boots with cloth.
3) Set new differential side small band and new differential side boot (1) on shaft temporarily, and then apply grease to tripod joint (2). Use specified grease in tube included in spare parts.
4) Install tripod joint spider (3) on shaft using special tool with hammer, directing its chamfered spline toward wheel side, and then fasten it with new snap ring (4) using snap ring plier (5).

**Special tool**
**(A): 09913–80113**

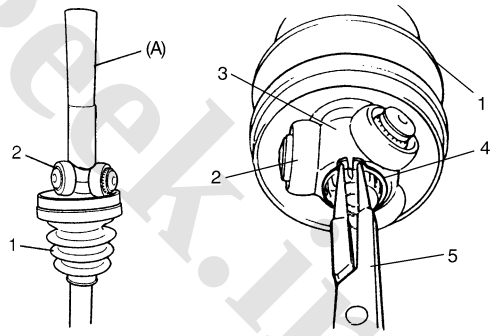


I5JB0A311009-01

www.cargeek.ir

www.CarGeek.ir


5) Apply grease (including in spare parts) to inside of tripod joint housing (1), joint it with tripod joint.

**Grease color**
**“A”: Yellow**

**Amount**
**“A”: 127 – 137 g (4.5 – 4.8 oz) (right side)**
**“A”: 170 – 180 g (6.0 – 6.3 oz) (left side)**

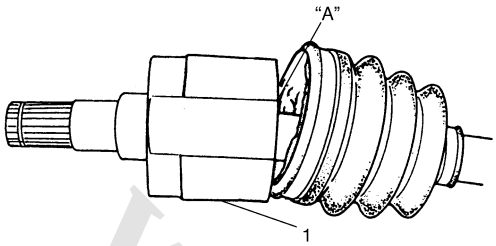

I4RS0B310003-01

6) Fit boot to grooves of shaft and housing.
7) Insert screw driver into boot and allow air to enter boot so that air pressure in boot becomes the same as atmospheric pressure.

**⚠ CAUTION**

- **Bend each boot band against forward rotation.**
- **Do not squeeze or distort boot when fastening it with bands. Distorted boot caused by squeezing air may reduce its durability.**

8) Place differential side boot new big band (3) and new small band (4) onto boot putting band outer end (1) against forward rotation (2) as shown in figure.

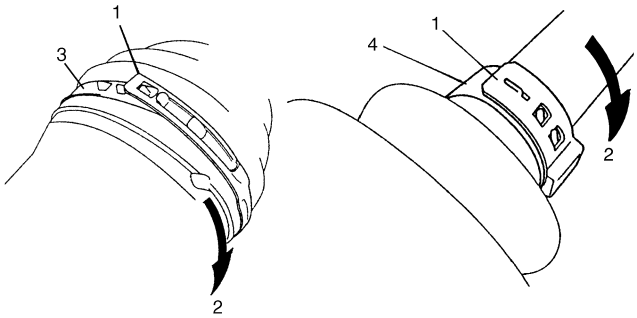

I5JB0A311006-01

9) Fasten differential side boot big band.
- For differential side boot big band
  Fasten band (1) by drawing hooks (2) with special tool and engage hooks (3) in slot and window (4).

  **Special tool**
  **(A): 09943–57010**

- For differential side boot small band
  Fasten band (5) securely using special tool.

**NOTE**

**Fasten boot small band securely until complete contact “a” is obtained.**

**Special tool**
**(A): 09943–57010**

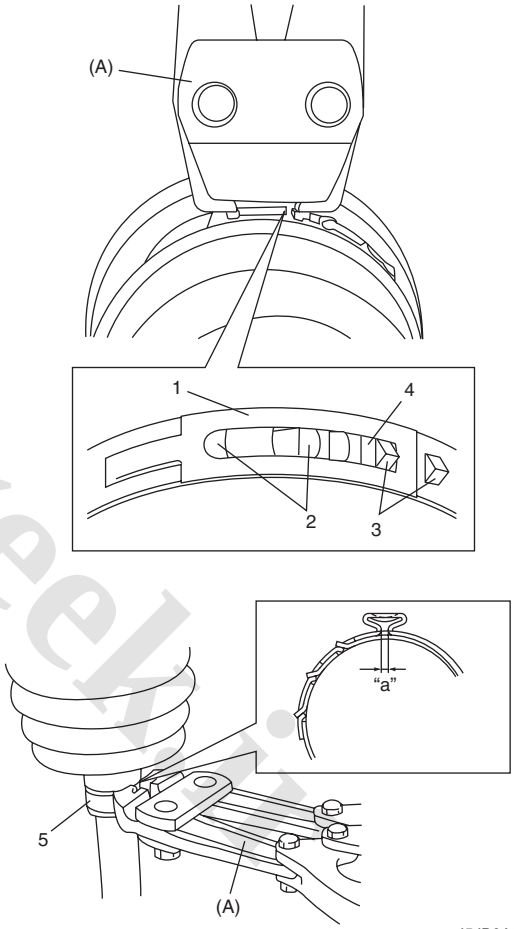

I5JB0A311007-02

www.cargeek.ir

www.CarGeek.ir

# Specifications

## Tightening Torque Specifications

S5JB0A3117001

**NOTE**

**The specified tightening torque is also described in the following.**
**“Front Drive Shaft Components: Front”**

**Reference:**
For the tightening torque of fastener not specified in this section, refer to “Fastener Information:  in Section 0A”.

# Special Tools and Equipment

## Recommended Service Material

S5JB0A3118001

**NOTE**

**Required service material is also described in the following.**
**“Front Drive Shaft Components: Front”**

## Special Tool

S5JB0A3118002

| | |
|---|---|
| 09913–80113<br>Bearing installer<br>☞ | 09943–57010<br>Band compressor<br>☞ / ☞ 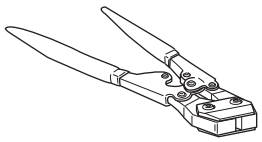 |

www.cargeek.ir

www.cargeek.ir

www.CarGeek.ir


# Rear

## General Description

### Rear Drive Shaft Construction

S5JB0A3121002

Refer to “Front Drive Shaft Construction: Front”.

## Repair Instructions

### Rear Drive Shaft Components

S5JB0A3126007

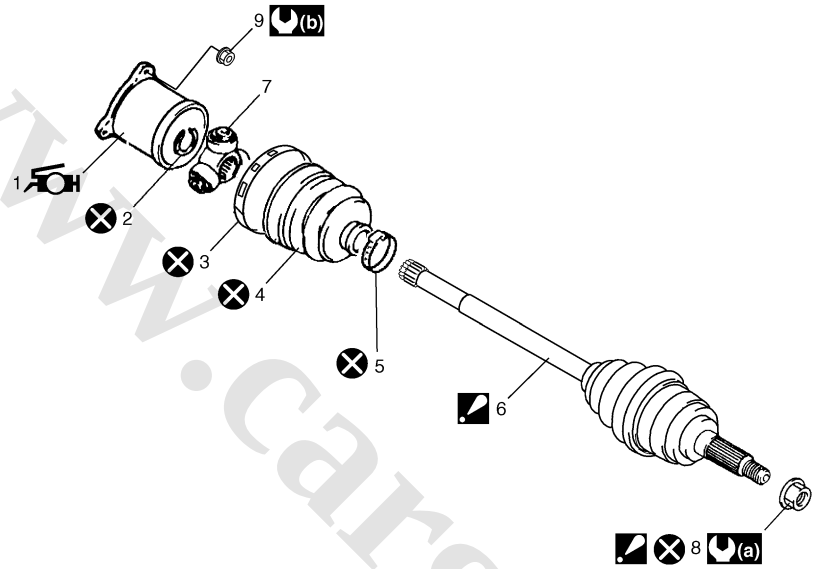


I5JB0A312001-02

| | | |
|---|---|---|
| 1. Differential side joint (Constant velocity tripod joint) : Apply yellow grease included in spare part to joint. | 5. Boot band (Small) | 9. Rear drive shaft flange nut |
| 2. Snap ring | 6. Wheel side joint (Constant velocity ball joint) : Never disassemble. | (a) : 200 N·m (20.0 kgf-m, 145.0 lb-ft) |
| 3. Boot band (Large) | 7. Tripod joint spider | (b) : 80 N·m (8.0 kgf-m, 58.0 lb-ft) |
| 4. Boot (Differential side) | 8. Drive shaft nut : After tightening nut, caulk nut securely. | : Do not reuse. |

www.cargeek.ir

www.CarGeek.ir

## Rear Drive Shaft Assembly Removal and Installation

S5JB0A3126008

### Removal

1) Undo caulking (1) of drive shaft nut (2) and then remove drive shaft nut.

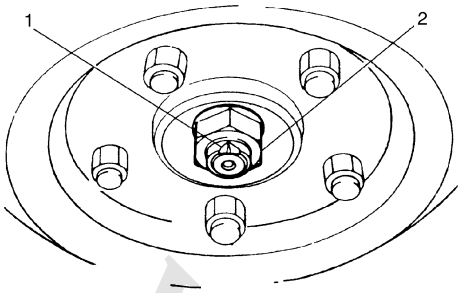


I5JB0A311003-01

2) Hoist vehicle and remove wheel.
3) Give match mark rear drive shaft flange (3) and rear drive shaft (4) as shown in figure, and then remove rear drive shaft flange nuts (1), and then remove rear drive shaft.

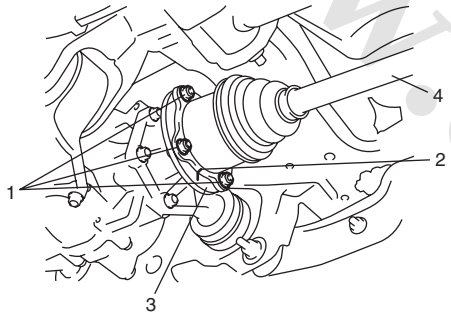


I5JB0A312002-02

| |
|---|
| 2. Match mark |

### Installation

Install drive shaft assembly by reversing removal procedure and noting the following points.

- Install rear drive shaft (1) aligning match marks (2).

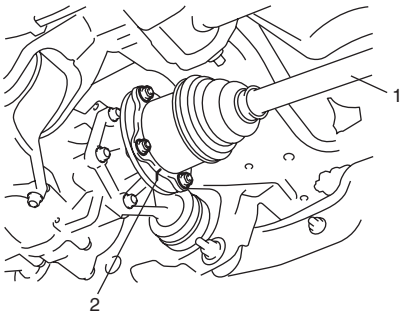


I5JB0A312003-01

**⚠ CAUTION**

- **Protect oil seals and boots from any damage, preventing them form unnecessary contact while installing drive shaft.**
- **Do not hit joint boot with hammer. Inserting joint only by hands is allowed.**
- **Make sure that differential side joint is inserted fully and its snap ring is seated as it was.**

- Tighten each nuts to specified torque referring to “Rear Drive Shaft Components: Rear”.

## Rear Drive Shaft Disassembly and Assembly

S5JB0A3126009

### Disassembly

Refer to “Front Drive Shaft Disassembly and Assembly: Front”.

### Assembly

Assemble rear drive shaft assembly referring to “Front Drive Shaft Disassembly and Assembly: Front” and noting the following points which are different from that of the front drive shaft assembly.

- Apply grease to differential side joint.

  **Grease color**
  **: Yellow**

  **Amount**
  **: 197 – 207 g (6.9 – 7.3 oz)**

- Install tripod joint spider (1) on shaft by using special tool with hammer, directing its chamfered spline toward wheel side, and then fasten it with new snap ring (2) using snap ring plier (3).

  **Special tool**
  **(A): 09913–84510**

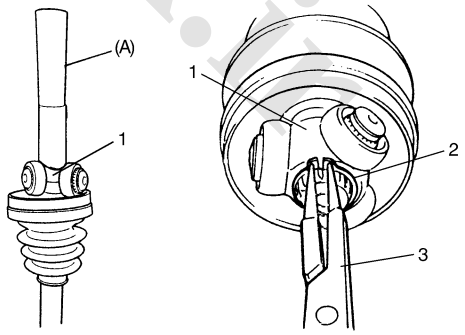


I5JB0A312004-03

www.cargeek.ir

www.CarGeek.ir


# Specifications

## Tightening Torque Specifications

S5JB0A3127001

**NOTE**

**The specified tightening torque is also described in the following.**
**“Rear Drive Shaft Components: Rear”**

**Reference:**
For the tightening torque of fastener not specified in this section, refer to “Fastener Information: in Section 0A”.

# Special Tools and Equipment

## Recommended Service Material

S5JB0A3128001

**NOTE**

**Required service material is also described in the following.**
**“Rear Drive Shaft Components: Rear”**

## Special Tool

S5JB0A3128002

| | |
|---|---|
| 09913–84510<br>Bearing installer<br>☞ 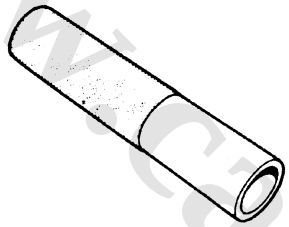 | |

www.cargeek.ir
www.cargeek.ir

www.CarGeek.ir

# Differential

## Front

### General Description

#### Front Differential Construction

S5JB0A3211001

The differential assembly uses a hypoid bevel pinion and gear.
The differential assembly is decisive in that the drive power is concentrated there. Therefore, use of genuine parts and specified torque is compulsory. Further, because of sliding tooth meshing with high pressure between bevel pinion and gear, it is mandatory to lubricate them by hypoid gear oil.

### Diagnostic Information and Procedures

#### Front Differential Symptom Diagnosis

S5JB0A3214001

| Condition | Possible cause | Correction / Reference Item |
|---|---|---|
| ***Gear noise*** | Deteriorated or water mixed lubricant | *Repair and replenish referring to “Front Differential Oil Change: Front”.* |
| | Inadequate or insufficient lubricant | *Repair and replenish referring to “Front Differential Oil Change: Front”.* |
| | Maladjusted backlash between drive bevel pinion and gear | *Adjust as prescribed referring to “Front Differential Assembly Disassembly and Reassembly: Front”.* |
| | Improper tooth contact in the mesh between drive bevel pinion and gear | *Adjust or replace referring to “Front Differential Assembly Disassembly and Reassembly: Front”.* |
| | Loose drive bevel gear securing bolts | *Replace or retighten referring to “Front Differential Assembly Disassembly and Reassembly: Front”.* |
| | Damaged differential gear(s) or differential pinion(s) | *Replace referring to “Front Differential Inspection: Front”.* |
| ***Bearing noise*** | (Constant noise) Deteriorated or water mixed lubricant | *Repair and replenish referring to “Front Differential Oil Change: Front”.* |
| | (Constant noise) Inadequate or insufficient lubricant | *Repair and replenish referring to “Front Differential Oil Change: Front”.* |
| | (Noise while coasting) Damaged bearing(s) of drive bevel pinion | *Replace referring to “Front Differential Inspection: Front”.* |
| | (Noise while turning) Damaged differential side bearing(s) or axle bearing(s) | *Replace referring to “Front Differential Inspection: Front”.* |
| ***Oil leakage*** | Clogged breather plug | *Clean.* |
| | Worn or damaged oil seal | *Replace.* |
| | Excessive oil | *Adjust oil level referring to “Front Differential Oil Change: Front”.* |
| | Loose differential carrier bolts | *Replace or retighten.* |

www.cargeek.ir

www.CarGeek.ir


# Repair Instructions

## Front Differential Oil Change

S5JB0A3216012

1) Before changing or inspecting oil, be sure to stop engine and lift vehicle horizontally.
2) With vehicle lifted up, check leakage.
   If leakage exists, correct it.

**NOTE**

**Whenever vehicle is hoisted for any other service work than oil change, also be sure to check for oil leakage.**

3) Remove oil filler plug (2).
4) Remove drain plug (1), and drain old oil.
5) Apply sealant to thread of drain plug (1), and tighten it to specified torque.

   **"A": Sealant 99000–31260 (SUZUKI Bond No.1217G)**

   **Tightening torque**
   **Differential oil drain plug (a): 23 N·m (2.3 kgf-m, 17.0 lb-ft)**

6) Pour new specified oil until oil level reaches bottom of oil filler plug hole (3) as shown in figure.

**NOTE**

- **Hypoid gear oil must be used for differential.**
- **It is highly recommended to use API GL-5 80W-90 gear oil.**

**Differential oil specification**
**: API GL-5 (For SAE classification, refer to viscosity chart [A] in figure.)**

**Differential oil capacity (Reference)**
**: 0.9 – 1.1 liters (1.9/1.6 – 2.3/1.9 US/Imp. pt.)**

7) Apply sealant to thread of level / filler plug, and then tighten it to specified torque.

   **"A": Sealant 99000–31260 (SUZUKI Bond No.1217G)**

   **Tightening torque**
   **Differential oil level / filler plug (b): 23 N·m (2.3 kgf-m, 17.0 lb-ft)**

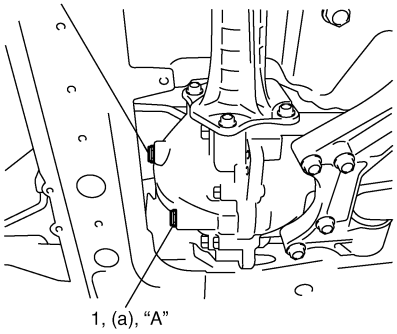


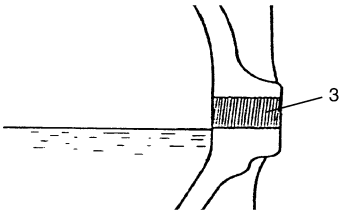


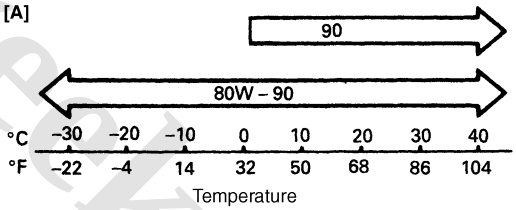


I5JB0A321004-02

www.cargeek.ir

www.CarGeek.ir

## Front Differential Unit Components

S5JB0A3216007

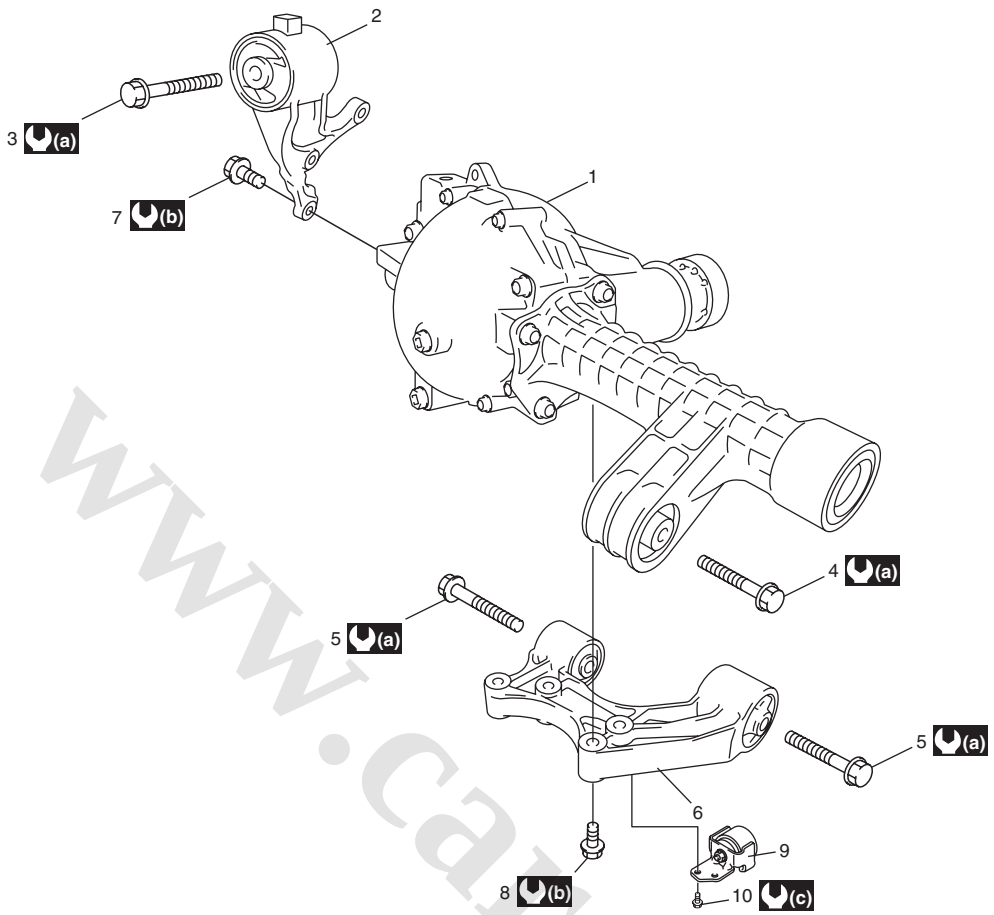


I5JB0A321001-05

| | |
|---|---|
| 1. Front differential | 8. Rear mounting bracket bolt |
| 2. Right mounting bracket | 9. Damper |
| 3. Right mounting bolt | 10. Damper bolt |
| 4. Differential mounting bolt | (a) : 85 N·m (8.5 kgf-m, 61.5 lb-ft) |
| 5. Rear mounting bolt | (b) : 50 N·m (5.0 kgf-m, 36.5 lb-ft) |
| 6. Rear mounting bracket | (c) : 23 N·m (2.3 kgf-m, 17.0 lb-ft) |
| 7. Right mounting bracket bolt | |

## Front Differential Dismounting and Remounting

S5JB0A3216008

### Dismounting

1) Lift up vehicle and drain front differential oil.
2) Remove front drive shafts referring to “Front Drive Shaft Assembly Removal and Installation: Front in Section 3A”.
3) Remove front suspension frame with front differential referring to “Front Suspension Frame, Stabilizer Bar and/or Bushings Removal and Installation: in Section 2B”.
4) Remove mounting bolts (1), and then take off front differential from front suspension frame (2).

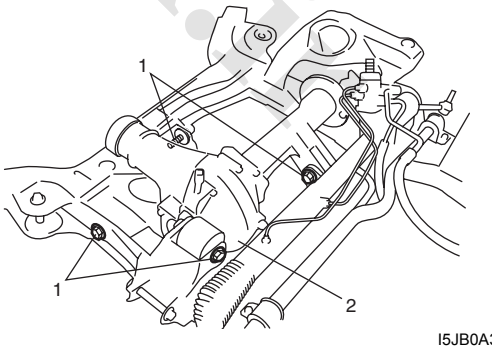


I5JB0A321002-01

www.cargeek.ir

www.CarGeek.ir


### Remounting

Reverse dismounting procedure for remounting noting the following.

- Tighten each bolts and nuts referring to “Front Differential Unit Components: Front”, “Front Drive Shaft Components: Front in Section 3A” and “Front Suspension Frame, Stabilizer Bar and/or Bushings Components: in Section 2B”.
- Fill front differential oil referring to “Front Differential Oil Change: Front”.

## Front Differential Components

S5JB0A3216001

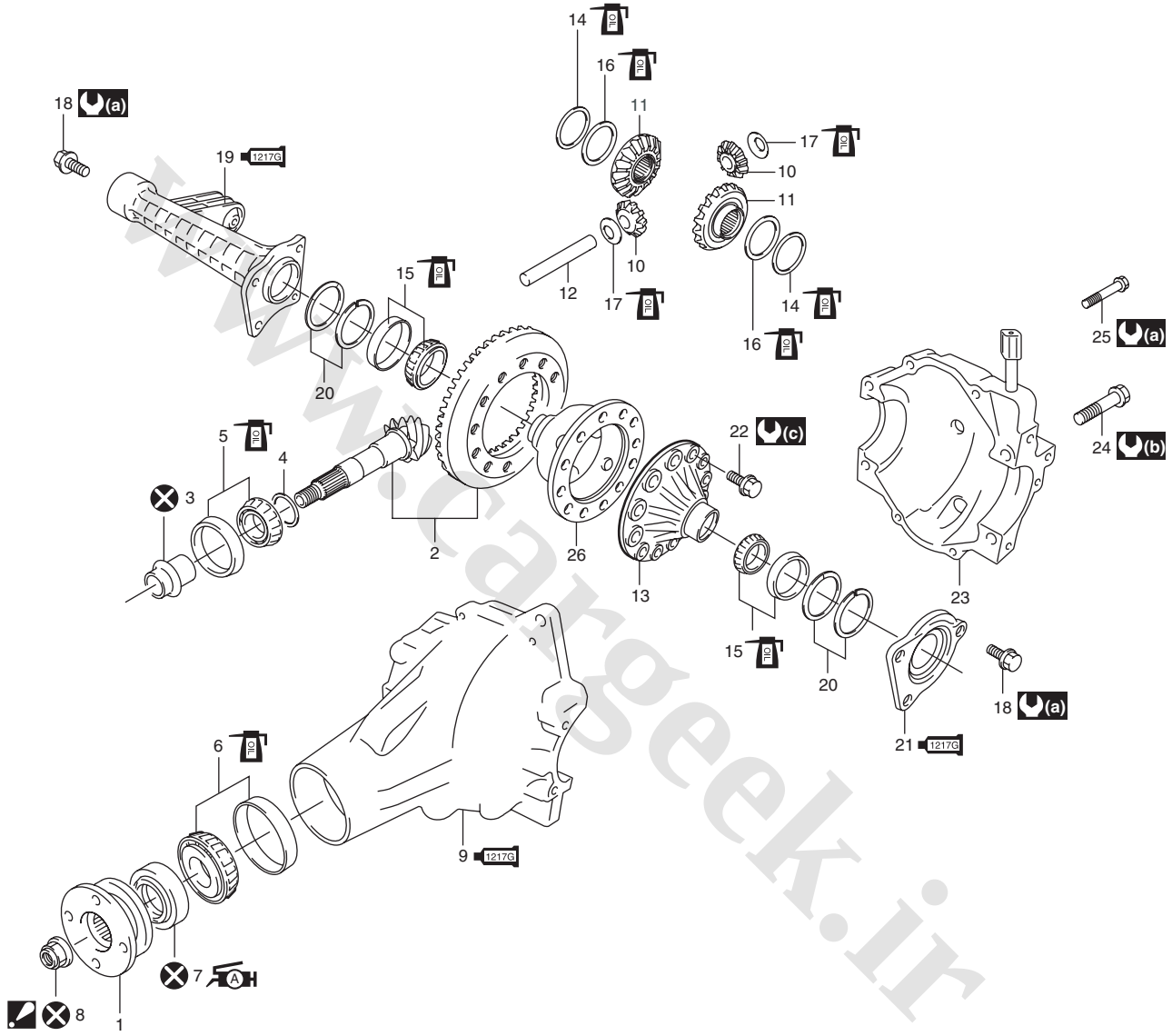


I5JB0A321003-08

| | |
|---|---|
| 1. Universal joint flange | 17. Pinion washer |
| 2. Hypoid gear set | 18. Retainer bolt |
| 3. Bevel pinion spacer | 1217G 19. Differential side right retainer<br>: Apply sealant 99000-31260 to mating surface of right retainer, carrier and rear cover. |
| 4. Shim | 20. Shim |
| 5. Rear bearing | 1217G 21. Front drive shaft retainer<br>: Apply sealant 99000-31260 to mating surface of drive shaft retainer, carrier and rear cover. |
| 6. Front bearing | 1322 22. Bevel gear bolt<br>: Apply thread lock cement 99000-32110 to thread part of bolt. |
| A 7. Oil seal<br>: Apply grease 99000-25010 to oil seal lip. | 23. Rear cover |
| 8. Flange nut<br>: After tightening nut so as rotation torque of bevel pinion shaft to be in specified value, caulk nut securely. | 24. Rear cover bolt No.1 bolt |

www.cargeek.ir

www.CarGeek.ir

| | |
|---|---|
| 1217G 9. Differential carrier<br>: Apply sealant 99000-31260 to mating surface of carrier and rear cover. | 25. Rear cover bolt No.2 bolt |
| 10. Differential pinion | 26. Differential right case |
| 11. Differential gear | (a) : 50 N·m (5.0 kgf-m, 36.5 lb-ft) |
| 12. Pinion shaft | (b) : 85 N·m (8.5 kgf-m, 61.5 lb-ft) |
| 13. Differential left case | (c) : 40 N·m (4.0 kgf-m, 29.5 lb-ft) + 50° |
| 14. Thrust washer | : Do not reuse. |
| 15. Differential side bearing | : Apply differential oil. |
| 16. Spring washer | |

## Front Differential Assembly Disassembly and Reassembly

S5JB0A3216010

### Disassembly

1) Remove front differential right mounting (1) and rear mounting (2).

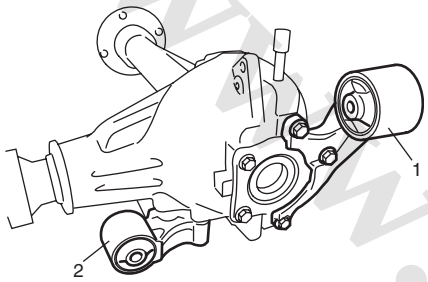


I5JB0A321005-01

2) Drive out front drive shaft (1) from front shaft retainer (2) using plastic hammer (3).

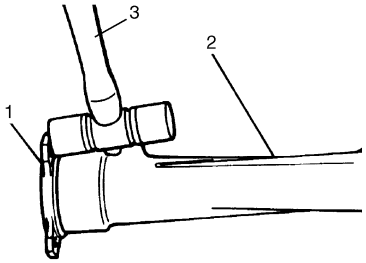


I5JB0A321006-01

3) Remove differential side right retainer and front drive shaft retainer, and then remove rear cover (1).

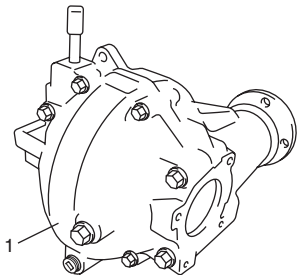


I5JB0A321007-01

4) Disassembly front drive shaft retainer as follows, if necessary.

a) Remove oil seal (1) from front drive shaft retainer using special tool.

**Special tool**
**(A): 09913–50121**

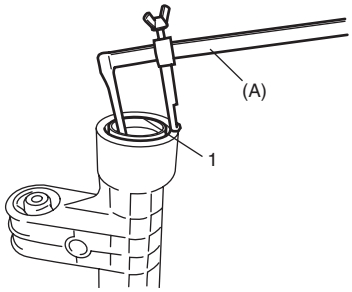


I5JB0A321008-01

b) Remove snap ring (1) using snap ring plier.

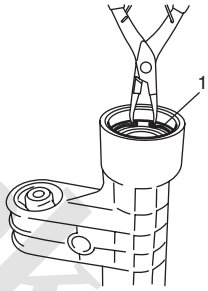


I5JB0A321009-01

c) Drive out front drive shaft bearing using special tools.

**Special tool**
**(A): 09930–30104**
**(B): 09941–64511**

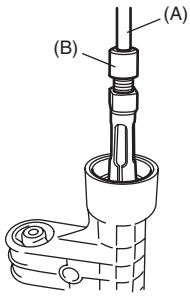


I5JB0A321010-01

www.cargeek.ir

www.CarGeek.ir


5) Support differential side right retainer (1) with soft jawed vise and remove oil seal (2) from differential side right retainer using special tool, if necessary.

**Special tool**
**(A): 09913–50121**

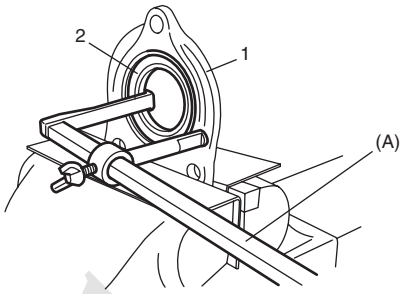

I5JB0A321011-01

6) Take out differential assembly (1), outer race and shim all at once.

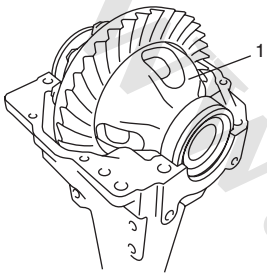

I5JB0A321012-02

7) Pull out differential side bearing (1) using special tools.

**Special tool**
**(A): 09913–65135**
**(B): 09925–86010**

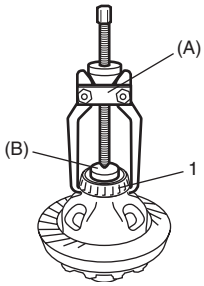

I5JB0A321013-02

8) Remove drive bevel gear (hypoid gear), differential gears, differential pinions and pinion shaft as follows.
   a) With aluminum plates (2) placed on vise first, grip differential case with it and remove drive bevel gear (hypoid gear) (3) by removing its bolts (1).

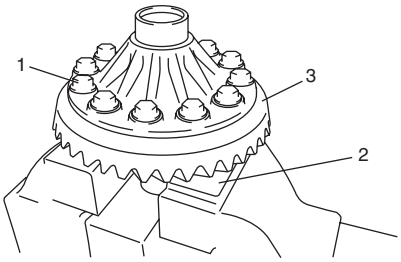

I5JB0A321014-02

   b) Remove pinion shaft (1), differential gears, washers, differential pinions, spring washers and thrust washers.

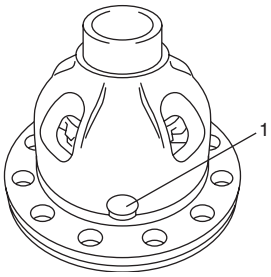

I5JB0A321015-02

9) Remove drive bevel pinion (hypoid gear) assembly as follows.
   a) Hold joint flange with special tool and then remove flange nut by using power wrench (4 – 10 magnification) (2).

**Special tool**
**(A): 09922–66021**

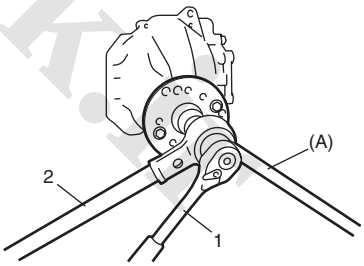

I5JB0A321016-02

| |
|---|
| 1. Socket wrench |

www.cargeek.ir

www.CarGeek.ir

b) Make mating marks (1) on drive bevel pinion and companion flange.

**⚠ CAUTION**

**Do not make mating mark on the coupling surface of the flange.**

c) Remove flange (2) from drive bevel pinion. Use special tool if it is hard to remove.

**Special tool**
**(A): 09913–65135**
**(B): 09925–88210**

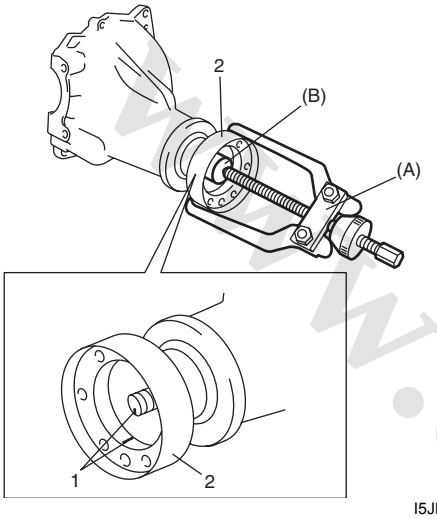


I5JB0A321017-02

d) Remove drive bevel pinion (1) with rear bearing, shim and spacer from carrier.
If it is hard to remove, screw an used nut (2) into drive bevel pinion and hammer (3) on that nut with a plastic hammer but never directly on drive bevel pinion.

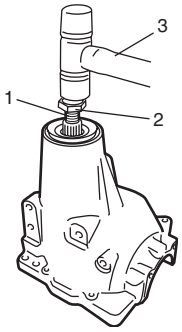


I5JB0A321018-01

e) Remove drive bevel pinion rear bearing (2) by using bearing puller (3) and hydraulic press.

**⚠ CAUTION**

**To avoid rear bearing from being damaged, support it at flat side of bearing puller.**

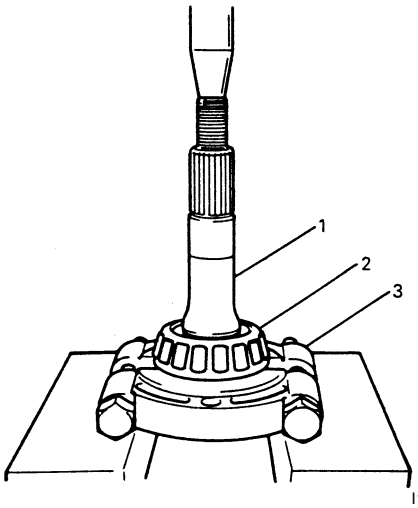


I1JA01322006-01

| |
|---|
| 1. Drive bevel pinion |

10) Remove oil seal (1) using special tool.

**Special tool**
**(A): 09913–50121**

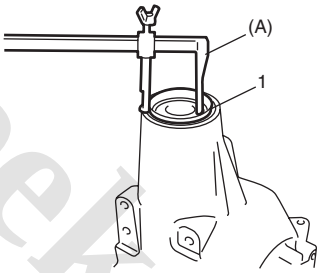


I5JB0A321019-01

11) Using a hammer and brass bar (1), drive out front bearing outer race (2).

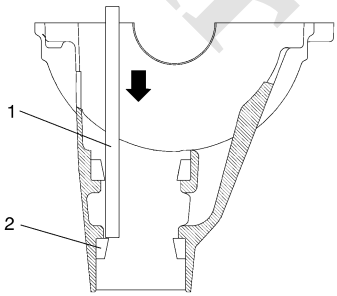


I5JB0A321020-01

www.cargeek.ir

www.CarGeek.ir


12) Drive out rear bearing outer race (1) in the same manner as Step 11).

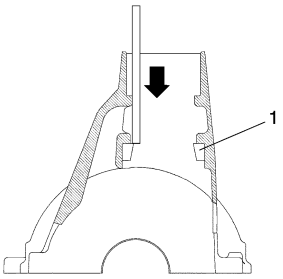


I5JB0A321021-01

**Reassembly**

Judging from faulty conditions noted before disassembly and what is found through visual check of bearing and gear tooth etc. after disassembly, prepare replacing parts and proceed to reassembly according to procedures as described.

**⚠ CAUTION**

- **Drive bevel gear and pinion must be replaced as a set when either replacement becomes necessary.**
- **When replacing taper roller bearing, replace as inner race and outer race assembly.**

1) For press-fitting drive bevel pinion bearing outer races, use special tools and press as shown in the figure.

**Special tool**
**(A): 09924–74510**
**(B): 09925–14520**
**(C): 09913–75510**

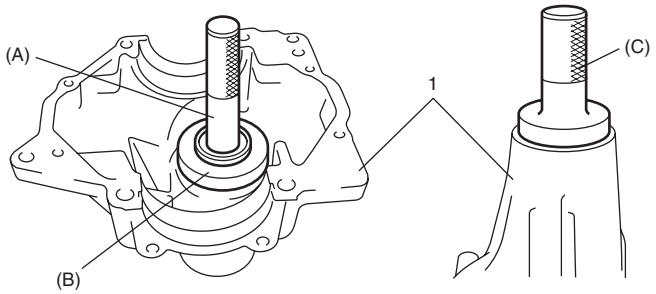


I5JB0A321022-01

| | |
|---|---|
| 1. | Differential carrier |

2) After applying differential oil to differential gear (4), pinions (5), pinion shaft (6), pinion washer, thrust washer (2) and spring washer (1), install them in differential right case (3).
For correct installing direction of thrust washer (2) and spring washer (1), refer to the figure.

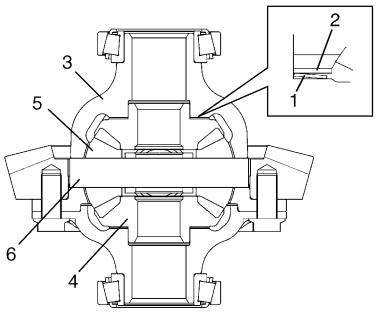


I5JB0A321023-05

3) Check differential pinion gear (1) for smooth rotation.

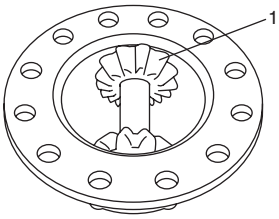


I5JB0A321024-04

4) Put drive bevel gear (3) on differential case (1) and fasten them with bolts (2) by tightening them to specified torque. Use thread lock cement for bolts (2).

**⚠ CAUTION**

**Use of any other bolts than that specified is prohibited.**

**"A": Thread lock cement 99000–32110 (Thread Lock Cement Super 1322)**

**Tightening torque**
**Bevel gear bolt (a): Tighten 40 N·m (4.0 kgf-m, 29.5 lb-ft) + 50°**

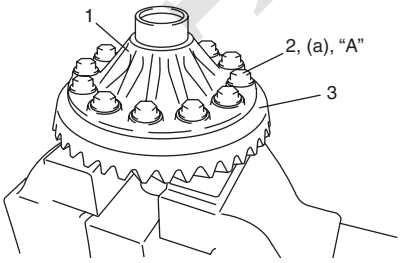


I5JB0A321025-01

www.cargeek.ir

www.CarGeek.ir

5) Install special tool to differential case assembly (2) and check that preload is within specification. If preload exceeds specified value, check if foreign matter is caught or gear is damaged.

**Special tool**
**(B): 09928–06510**

**Side gear preload**
**Max. 2.5 N·m (0.25 kgf-m, 1.8 lb-ft)**

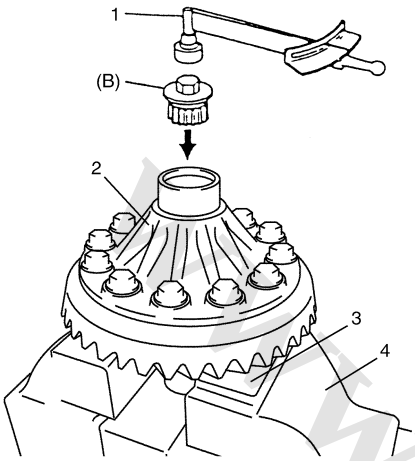

I5JB0A321026-01

| | |
|---|---|
| 1. | Torque wrench |
| 3. | Aluminum plate |
| 4. | Vise |

6) Press-fit left side bearing (1) with special tool and hydraulic press.

**Special tool**
**(A): 09913–75821**
**(B): 09924–84510–004**

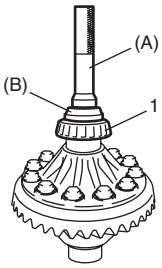

I5JB0A321027-01

7) Press-fit right side bearing (1) with special tools and hydraulic press.

**NOTE**

**Be sure to use bearing holder for the purpose of protecting lower bearing.**

**Special tool**
**(A): 09913–75821**
**(B): 09924–84510–004**
**(C): 09924–84510–005**

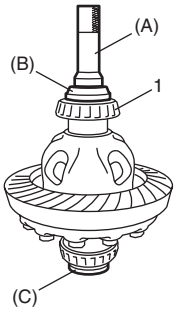

I5JB0A321028-02

www.cargeek.ir

8) To engage drive bevel pinion and gear correctly, it is pre-required to install drive bevel pinion to differential carrier properly by using adjusting shim as described on the followings. Shown below is relative positions of drive bevel pinion, differential carrier and mounting dummy.

**Special tool**
**(A): 09900–20607**
**(B): 09926–78320**
**(C): 09922–75222**
**(D): 09951–16070**
**(E): 09951–46010**
**(F): 09926–78311–002**
**(G): 09922–76520**

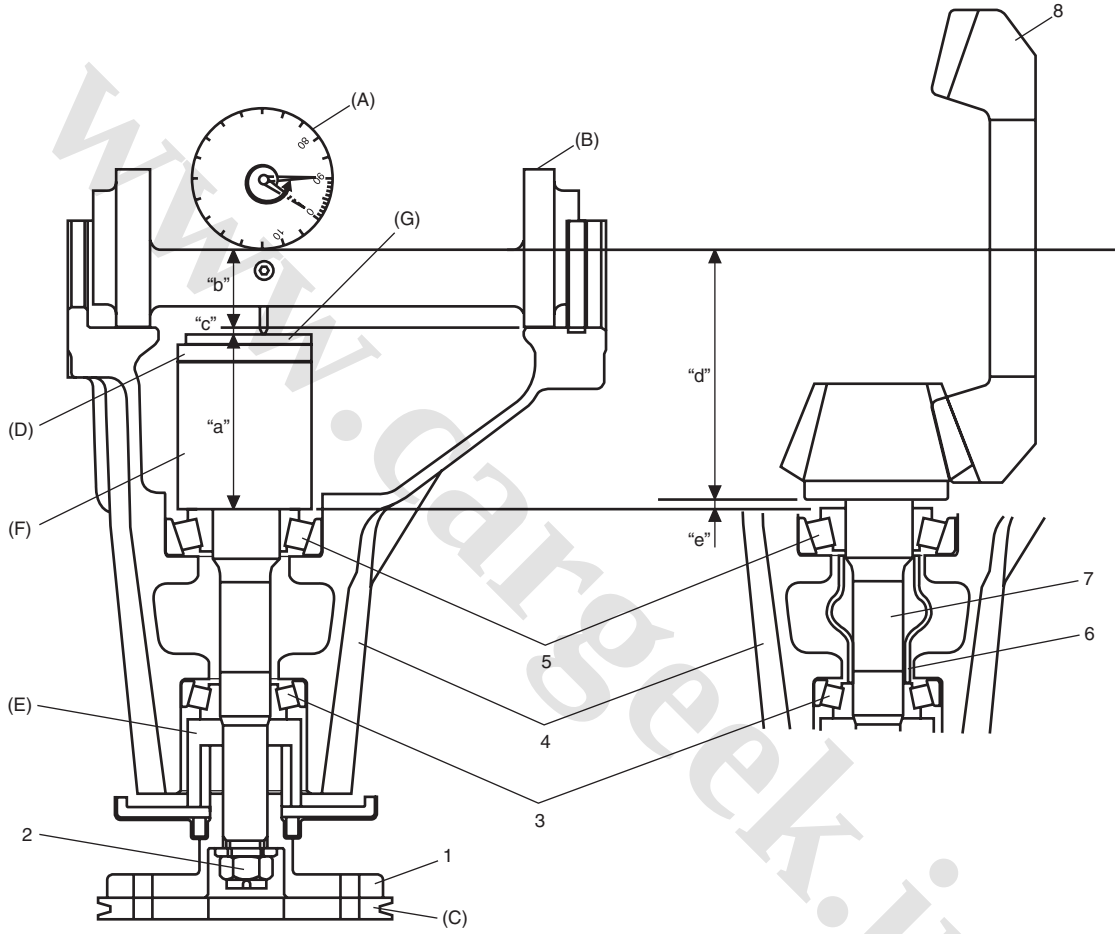


I5JB0A321029-02

| | |
|---|---|
| 1. Universal Joint flange | 8. Drive bevel gear |
| 2. Nut | "a": Pinion dummy height + Attachment height |
| 3. Front bearing | "b": Axle dummy radius |
| 4. Differential carrier | "a" + "b": Mounting dummy size 103.0 mm/4.0551 in. |
| 5. Rear bearing | "c": Measured dimension |
| 6. Spacer | "d": Drive bevel pinion mounting distance 102.0 mm/4.0157 in. |
| 7. Drive bevel pinion | "e": Shim size for mounting distance adjustment (= "c" + 1) |

www.cargeek.ir

www.CarGeek.ir

9) Install special tools with bearings (3) and flange (2) to differential carrier (1).

**NOTE**

**This installation requires no spacer or oil seal.**

**Special tool**
**(E): 09951–46010**
**(F): 09926–78311–002**

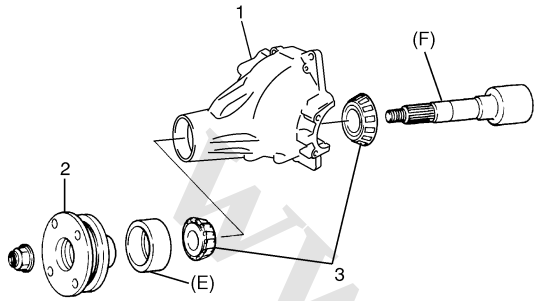

I5JB0A321030-01

10) Tighten flange nut (1) so that specified bearing preload is obtained.

**NOTE**

- **Before taking measurement with spring balance (2) or torque wrench (3), check for rotation by hand and apply small amount of differential oil to bearings.**
- **On measuring preload, rotate the drive bevel pinion about 1 rotation per 2 seconds.**

**Special tool**
**(C): 09922–75222**
**(F): 09926–78311–002**

**Pinion bearing preload**
**0.9 – 1.7 N·m (9.0 – 17.0 kg-cm, 7.8 – 14.7 lb-in.)**

**Spring measure reading with special tool**
**20 – 40 N (2.0 – 4.0 kg, 4.4 – 8.8 lb)**

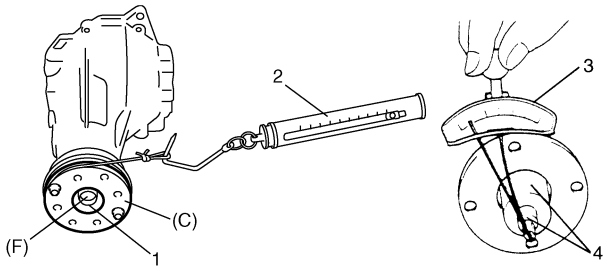

I5JB0A321031-01

4. Socket with adapter

11) Set dial gauge to mounting dummy and make 0 (zero) adjustment on surface plate (1).

**NOTE**

- **When setting dial gauge to mounting dummy, tighten screw (2) lightly. Be careful not to overtighten it, which will cause damage to dial gauge.**
- **With dial gauge set, turn dummy back and force by hand a couple of times and attain accurate 0 (zero) adjustment.**
- **It is desirable that short pointer indicates beyond 2 mm when long one is at 0 (zero).**

**Special tool**
**(A): 09900–20607**
**(B): 09926–78320**

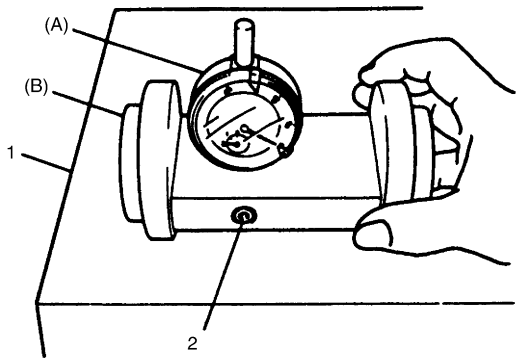

IYSQ01322033-01

12) Place zero-adjusted mounting dummy and dial gauge set on pinion mounting dummy and take measurement between zero position and extended dial gauge measuring tip.

**NOTE**

- **Repeat turning back and force of dummy and measure distance as far as top surface of pinion dummy accurately.**
- **When dial gauge measuring tip extends from 0 (zero) position, pointer turns counterclockwise.**
- **Measured value may exceed 1 mm. Therefore, it is also necessary to know reading of short pointer.**

www.cargeek.ir

**Special tool**
**(A): 09900–20607**
**(B): 09926–78311**
**(D): 09951–16070**
**(F): 09926–78311–002**
**: 09922–76520**

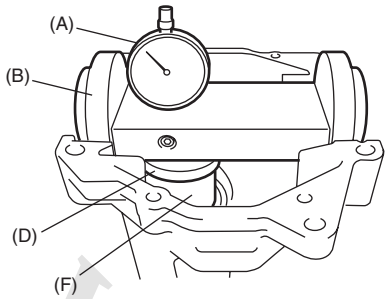

I5JB0A321032-01

13) Obtain adjusting shim thickness by the following equation.
"1 mm (0.039 in.)" is "a" + "b" (Mounting dummy size) – "d" (Drive bevel pinion mounting distance)

| | | | | |
|---|---|---|---|---|
| Necessary shim thickness "e" | = | 1 mm (0.039 in.) | + | Dial gauge measured value "c" |

14) Select adjusting shim(s) (2) closest to calculated value from among the following available sizes and put it in place and then press-fit rear bearing (1).

**Special tool**
**(G): 09913–85210**
**(H): 09940–53111**

**Available shim thickness**
**1.00, 1.03, 1.06, 1.09, 1.12, 1.15, 1.18, 1.21,1.24, 1.27, 1.30 and 0.3 mm**
**(0.039, 0.040, 0.042, 0.043, 0.044, 0.045, 0.046, 0.047 0.048, 0.049, 0.050 and 0.012 in.)**

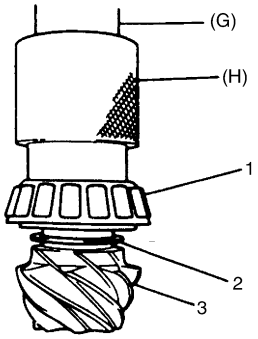

I5JB0A321033-01

| |
|---|
| 3. Drive bevel pinion |

15) With new pinion spacer (3) inserted as shown in the figure, install front bearing (5) to differential carrier (4).

**NOTE**

- **Make sure to use new spacer for reinstallation.**
- **Apply differential oil to bearings.**

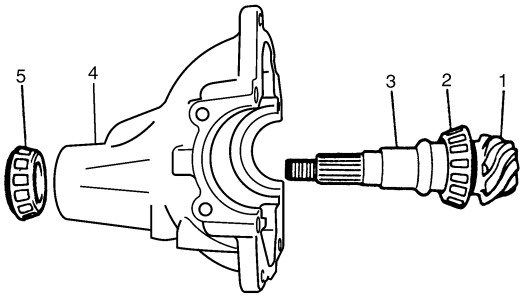

I5JB0A321034-01

| | |
|---|---|
| 1. | Drive bevel pinion |
| 2. | Rear bearing |

16) Using special tool and plastic hammer, drive oil seal (2) into differential carrier (1) as shown in figure. Then apply grease "A" to oil seal lip.

**"A": Grease 99000–25010 (SUZUKI Super Grease A)**

**Special tool**
**(A): 09951–18210**

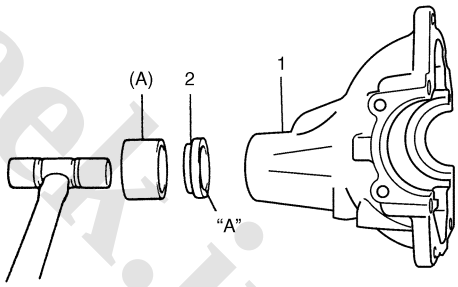

I5JB0A321035-01

www.cargeek.ir

www.CarGeek.ir

17) While tightening flange nut gradually with special tool and power wrench (4 – 10 magnification) (1), set preload of pinion to specification.

**NOTE**

- **Before taking measurement with spring balance (3) or torque wrench (4), check for smooth rotation by hand.**
- **On measuring preload, rotate the drive bevel pinion about 1 rotation per 2 seconds.**
- **Be sure to tighten gradually and carefully till specified starting torque is obtained. Turning back overtightened flange nuts should be avoided.**

**Pinion bearing preload**
**0.9 – 1.7 N·m (9.0 – 17.0 kg-cm, 7.8 – 14.7 lb-in.)**

**Spring measure reading with special tool**
**20 – 40 N (2.0 – 4.0 kg, 4.4 – 8.8 lb)**

**Special tool**
**(A): 09922–75222**
**(B): 09922–66021**

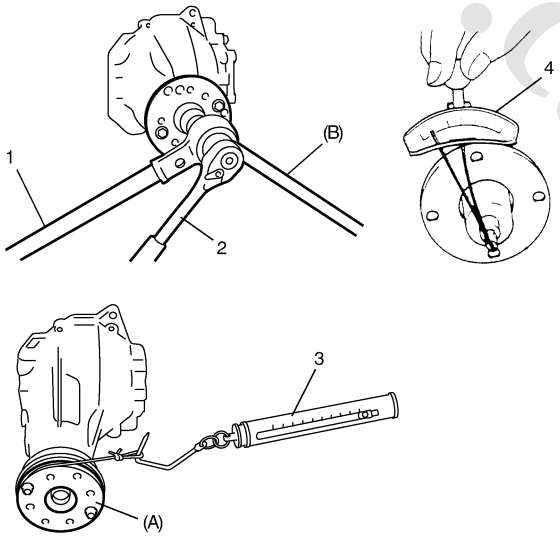


I5JB0A321036-02

| |
|---|
| 2. Socket wrench |

18) Select differential side bearing shim as follows.

a) Measure dimension “a” and “b” using vernier caliper.

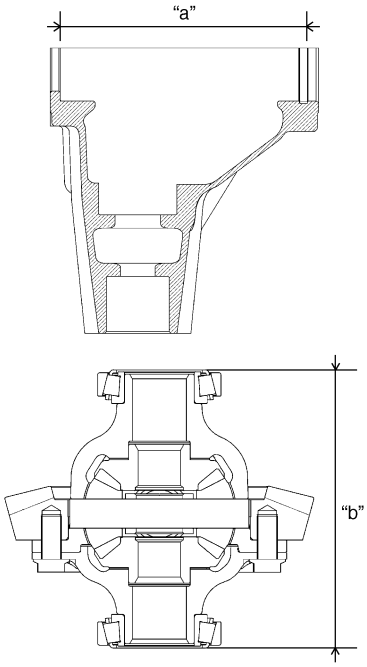


I5JB0A321037-04

b) Calculate dimension “a” – “b”, and select shims from among following available size so that total of thickness of right side and left side shims may reach the calculated value.

**NOTE**

**Select shims so that thickness of right side shims and left side shims become almost even.**

**Available shim thickness**
**Right side: 1.75, 1.85, 1.95, 2.00, 2.05, 2.15 and 2.25 mm (0.069, 0.073, 0.077, 0.079, 0.081, 0.085 and 0.089 in.)**
**Left side: 2.75, 2.85, 2.95, 3.00, 3.05, 3.15 and 3.25 mm (0.108, 0.112, 0.116, 0.118, 0.120, 0.124 and 0.128 in.)**

www.cargeek.ir

www.CarGeek.ir


19) To measure bevel gear backlash, set dial gauge (1) at right angle to bevel gear tooth, fix drive bevel pinion and read dial gauge while moving bevel gear.

**Special tool**
**(A): 09900–20607**
**(B): 09900–20701**

**NOTE**

- **Be sure to apply measuring tip of dial gauge at right angles to convex side of tooth.**
- **Measure at least 4 points on drive bevel gear periphery.**

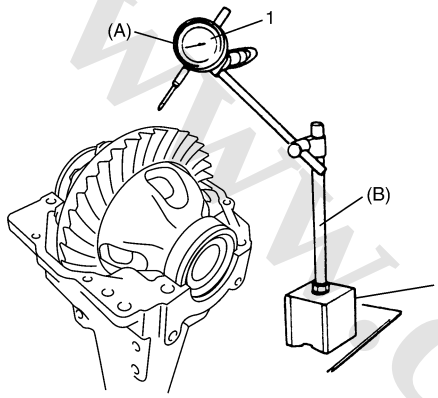

I5JB0A321038-03

20) Place bearing outer races on their respective bearings. Used left and right outer races are not interchangeable.

21) Install case assembly (1) in carrier (2).

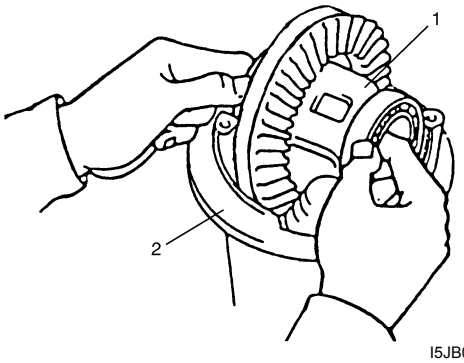

I5JB0A321039-01

22) As final step, check gear tooth contact as follows.
   a) After cleaning 10 drive bevel gear teeth, paint them with gear marking compound evenly by using brush (1) or sponge etc.
   b) Turn gear to bring its painted part in mesh with drive bevel pinion and turn it back and forth by hand to repeat their contact.
   c) Bring painted part up and check contact pattern, referring to the following table. If contact pattern is not normal, readjust or replace as necessary according to instruction in the table.

**NOTE**

**Be careful not to turn drive bevel gear more than one full revolution, for it will hinder accurate check.**

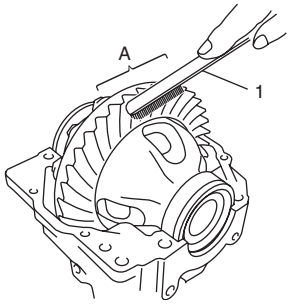

I5JB0A321040-02

| | |
|---|---|
| A: | Paint gear marking compound evenly |

www.cargeek.ir

www.CarGeek.ir

| Tooth Contact Pattern | Diagnosis and Remedy |
|---|---|
| 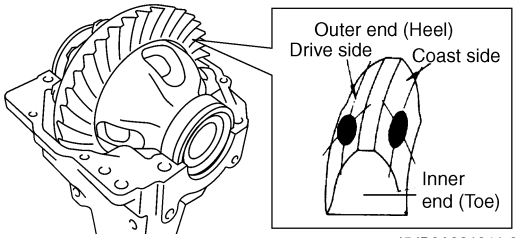 I5JB0A321041-05 | Normal |
| IYSQ01321072-01 | High Contact<br>Pinion is positioned too far from the center of drive bevel gear (1).<br>• Increase thickness of pinion (2) height adjusting shim and position pinion closer to gear center.<br>• Adjust drive bevel gear backlash to specification.<br> 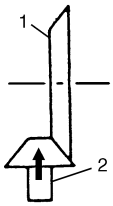 IYSQ01321073-01 |
| IYSQ01321074-01 | Low Contact<br>Pinion is positioned too close to the center of drive bevel gear (1).<br>• Decrease thickness of pinion (2) height adjusting shim and position pinion farther from gear center.<br>• Adjust drive bevel gear backlash to specification.<br> 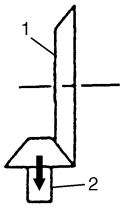 IYSQ01321076-01 |
| 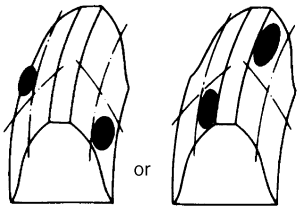 IYSQ01321077-01 | If adjustment is impossible, replace differential carrier. |
| 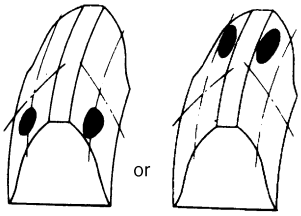 IYSQ01321078-01 | • Check seating of bevel gear or differential case. (Check bevel gear for runout.)<br>• If adjustment is impossible, replace drive bevel gear and pinion set or differential carrier. |
| 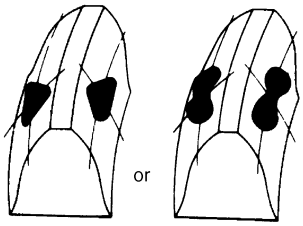 IYSQ01321079-01 | Replace drive bevel gear and pinion set or differential case. |

www.cargeek.ir

www.CarGeek.ir


23) Upon completion of gear tooth contact check in Step 22), caulk flange nut (2) with caulking tool (1) and hammer.

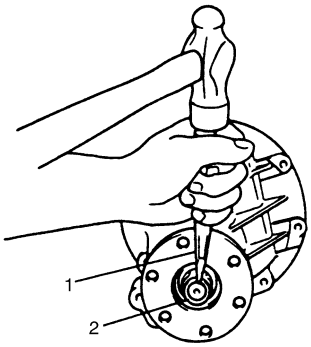


I1JA01322021-01

24) Install rear cover (1) to differential carrier (2).

**Tightening torque**
**Rear cover bolt No.1 (a): 50 N·m (5.0 kgf-m, 36.5 lb-ft)**
**Rear cover bolt No.2 (b): 85 N·m (8.5 kgf-m, 61.5 lb-ft)**

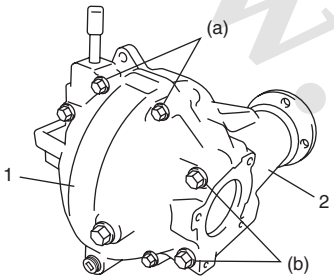


I5JB0A321042-01

25) Assembly front drive shaft retainer as follows.
   a) Install front drive shaft bearing (1) using special tool, and then install snap ring.

**Special tool**
**(A): 09913–75520**

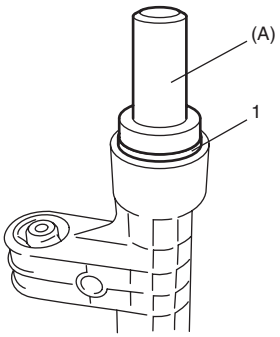


I5JB0A321043-01

   b) Apply grease to oil seal lip, and then install oil seal (1) using special tools as shown in figure.

**Distance between retainer surface and oil seal**
**"a": 4.7 – 5.2 mm (0.185 – 0.205 in.)**

**"A": Grease 99000–25010 (SUZUKI Super Grease A)**

**Special tool**
**(A): 09924–74510**
**(B): 09951–16090**

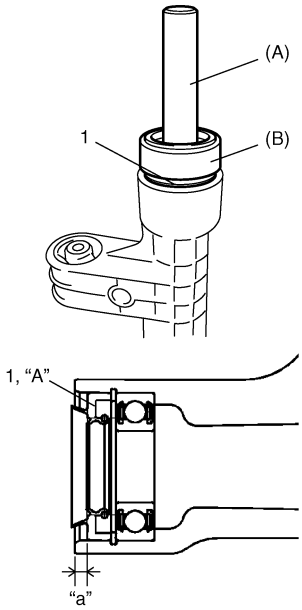


I5JB0A321044-01

26) Apply grease to oil seal lip, and then install oil seal into differential side right retainer (1) as shown in figure.

**Distance between retainer surface and oil seal**
**"a": 0.65 – 1.65 mm (0.026 – 0.065 in.)**

**"A": Grease 99000–25010 (SUZUKI Super Grease A)**

**Special tool**
**(A): 09913–75520**

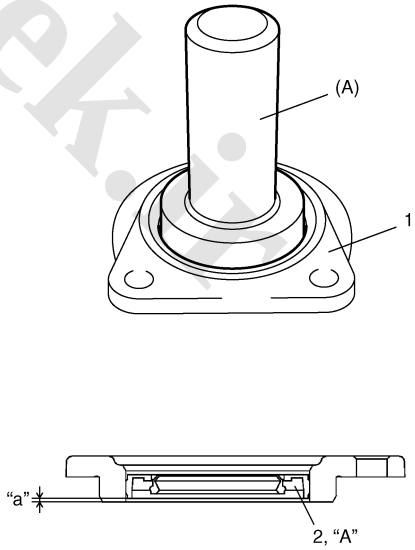


I5JB0A321045-01

www.cargeek.ir

www.CarGeek.ir

27) Clean mating surface of right retainer, carrier (1) and rear cover (2), apply sealant to carrier and rear cover as shown in figure by such amount that its section is 1.5 mm (0.059 in.) in diameter, mate right retainer with carrier and rear cover, and then tighten bolts to specified torque.

**"A": Sealant 99000–31260 (SUZUKI Bond No.1217G)**

**Tightening torque**
**Retainer bolt: 50 N·m (5.0 kgf-m, 36.5 lb-ft)**

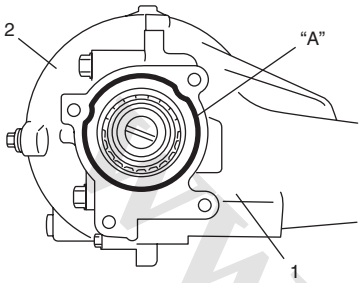

I5JB0A321048-01

28) Clean mating surface of front drive shaft retainer, carrier (1) and rear cover (2), apply sealant to carrier and rear cover as shown in figure by such amount that its section is 1.5 mm (0.059 in.) in diameter, mate front drive shaft retainer with carrier and rear cover, and then tighten bolts to specified torque.

**"A": Sealant 99000–31260 (SUZUKI Bond No.1217G)**

**Tightening torque**
**Retainer bolt: 50 N·m (5.0 kgf-m, 36.5 lb-ft)**

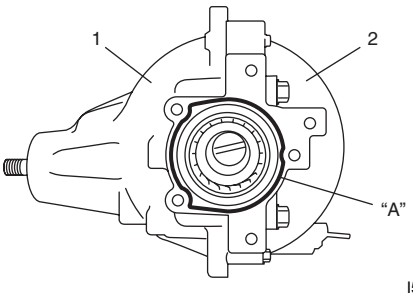

I5JB0A322014-01

29) Install front drive shaft using plastic hammer.

30) Install front differential rear mounting (1).

**Tightening torque**
**Rear mounting bracket bolt (a): 50 N·m (5.0 kgf-m, 36.5 lb-ft)**

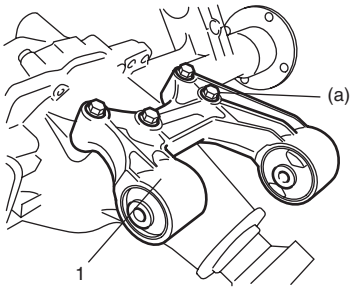

I5JB0A321046-01

31) Install front differential right mounting (1).

**Tightening torque**
**Right mounting bracket bolt (b): 50 N·m (5.0 kgf-m, 36.5 lb-ft)**

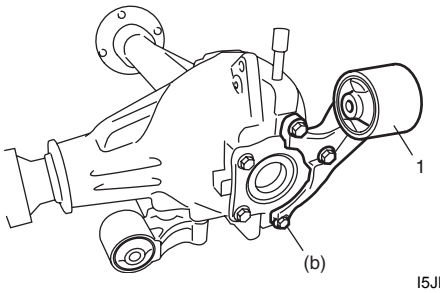

I5JB0A321047-02

## Front Differential Inspection

S5JB0A3216011

- Check companion flange for wear or damage.
- Check bearings for wear or discoloration.
- Check differential carrier for cracks.
- Check drive bevel pinion and drive bevel gear for wear or cracks.
- Check differential gears, pinions and pinion shafts for wear or damage.
- Check differential gear spline for wear or damage.

www.cargeek.ir

www.CarGeek.ir


# Specifications

## Tightening Torque Specifications

S5JB0A3217001

| Fastening part | Tightening torque | | | Note |
|---|---|---|---|---|
| | N·m | kgf-m | lb-ft | |
| Differential oil drain plug | 23 | 2.3 | 17.0 | ☞ |
| Differential oil level / filler plug | 23 | 2.3 | 17.0 | ☞ |
| Bevel gear bolt | Tighten 40 N·m (4.0 kgf-m, 29.5 lb-ft) + 50° | | | ☞ |
| Rear cover bolt No.1 | 50 | 5.0 | 36.5 | ☞ |
| Rear cover bolt No.2 | 85 | 8.5 | 61.5 | ☞ |
| Retainer bolt | 50 | 5.0 | 36.5 | ☞ / ☞ |
| Rear mounting bracket bolt | 50 | 5.0 | 36.5 | ☞ |
| Right mounting bracket bolt | 50 | 5.0 | 36.5 | ☞ |

**NOTE**

**The specified tightening torque is also described in the following.**
**“Front Differential Unit Components: Front”**
**“Front Differential Components: Front”**

**Reference:**
For the tightening torque of fastener not specified in this section, refer to “Fastener Information: in Section 0A”.

# Special Tools and Equipment

## Recommended Service Material

S5JB0A3218001

| Material | SUZUKI recommended product or Specification | | Note |
|---|---|---|---|
| Grease | SUZUKI Super Grease A | P/No.: 99000–25010 | ☞ / ☞ / ☞ |
| Sealant | SUZUKI Bond No.1217G | P/No.: 99000–31260 | ☞ / ☞ / ☞ / ☞ |
| Thread lock cement | Thread Lock Cement Super 1322 | P/No.: 99000–32110 | ☞ |

**NOTE**

**Required service material is also described in the following.**
**“Front Differential Components: Front”**

## Special Tool

S5JB0A3218002

| | |
|---|---|
| 09900–20607<br>Dial gauge<br>☞ / ☞ / ☞ / ☞<br> 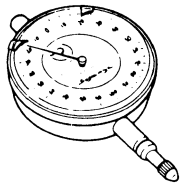 | 09900–20701<br>Magnetic stand<br>☞<br> 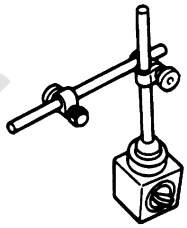 |
| 09913–50121<br>Oil seal remover<br>☞ / ☞ / ☞<br> 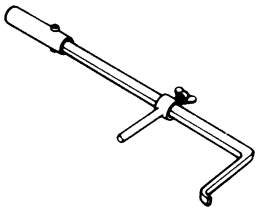 | 09913–65135<br>Bearing puller<br>☞ / ☞<br> 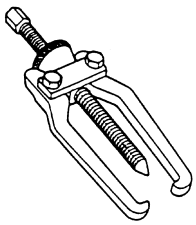 |

www.cargeek.ir

www.CarGeek.ir

| | |
|---|---|
| 09913–75510<br>Bearing installer<br>☞ 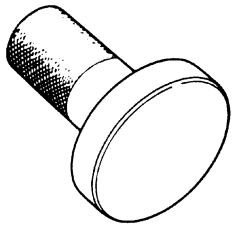 | 09913–75520<br>Bearing installer<br>☞ / ☞ 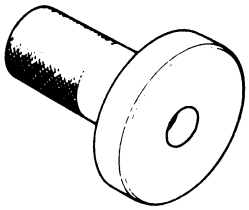 |
| 09913–75821<br>Bearing installer attachment<br>☞ / ☞ 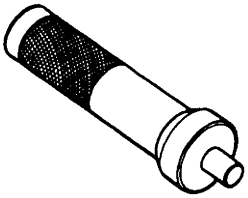 | 09913–85210<br>Bearing installer<br>☞ 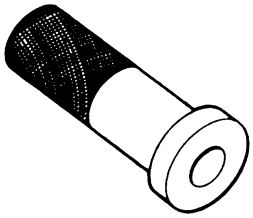 |
| 09922–66021<br>Flange holder<br>☞ / ☞ 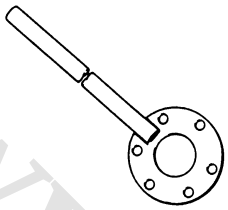 | 09922–75222<br>Differential gear preload adjuster<br>☞ / ☞ / ☞ 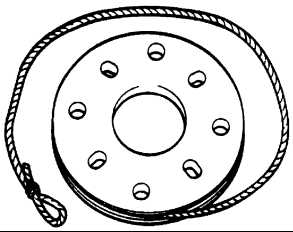 |
| 09922–76520<br>Bevel pinion gauge block<br>☞ / ☞ 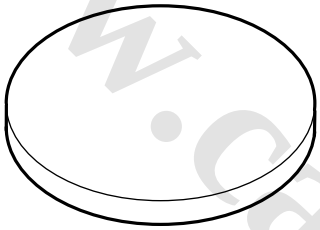 | 09924–74510<br>Bearing and oil seal handle<br>☞ / ☞ 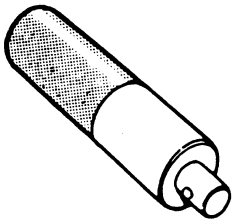 |
| 09924–84510–004<br>Bearing installer attachment<br>☞ / ☞ 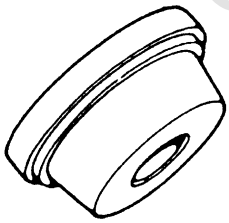 | 09924–84510–005<br>Bearing installer attachment (D)<br>☞ 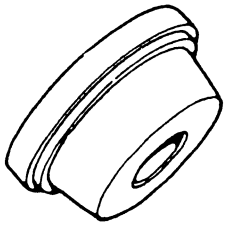 |
| 09925–14520<br>Bearing and oil seal installer (80 x 50 mm)<br>☞ | 09925–86010<br>Bearing puller attachment<br>☞ 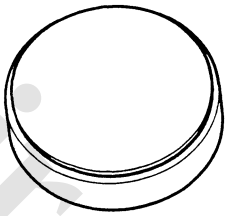 |
| 09925–88210<br>Bearing puller attachment<br>☞ 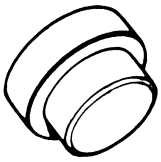 | 09926–78311–002<br>Pinion mounting dummy<br>☞ / ☞ / ☞ / ☞ 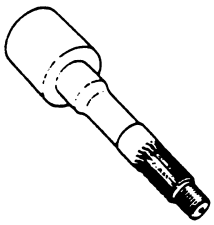 |
| 09926–78311<br>Differential bevel pinion dummy<br>☞ 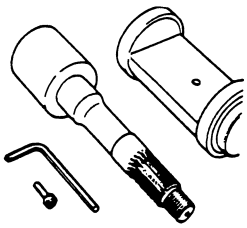 | 09926–78320<br>Mounting dummy<br>☞ / ☞ 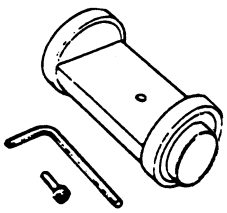 |

www.cargeek.ir

www.CarGeek.ir


| | |
|---|---|
| 09928–06510<br>Differential torque checking tool<br>☞ | 09930–30104<br>Sliding shaft<br>☞ 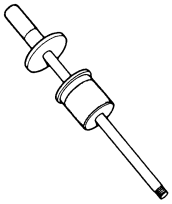 |
| 09940–53111<br>Differential side bearing installer<br>☞ 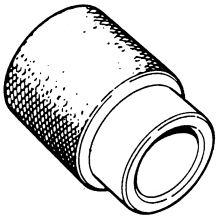 | 09941–64511<br>Bearing and oil seal remover (30 mm Min.)<br>☞ 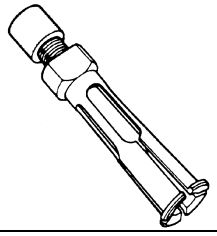 |
| 09951–16070<br>Shim adjuster attachment<br>☞ / ☞ 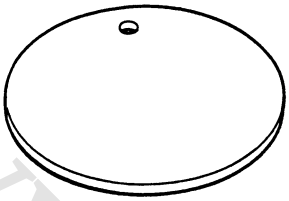 | 09951–16090<br>Oil seal installer<br>☞ 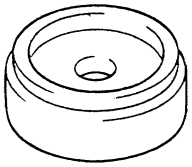 |
| 09951–18210<br>Oil seal remover & installer No. 2<br>☞ 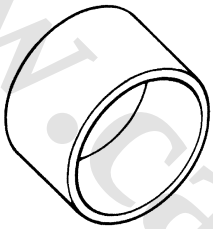 | 09951–46010<br>Drive shaft oil seal installer<br>☞ / ☞ 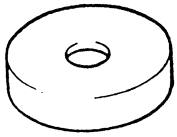 |

www.cargeek.ir

www.CarGeek.ir

# Rear

## General Description

### Rear Differential Construction

S5JB0A3221001

Refer to “Front Differential Construction: Front”.

## Diagnostic Information and Procedures

### Rear Differential Symptom Diagnosis

S5JB0A3224001

Refer to “Front Differential Symptom Diagnosis: Front”.

## Repair Instructions

### Rear Differential Oil Change

S5JB0A3226010

Refer to “Front Differential Oil Change: Front”.
The point which is different from the front differential is described.

**Differential oil capacity (Reference)**
**: 0.8 – 0.9 liters (1.7/1.4 – 1.9/1.6 US/Imp. pt.)**

### Rear Differential Unit Components

S5JB0A3226011

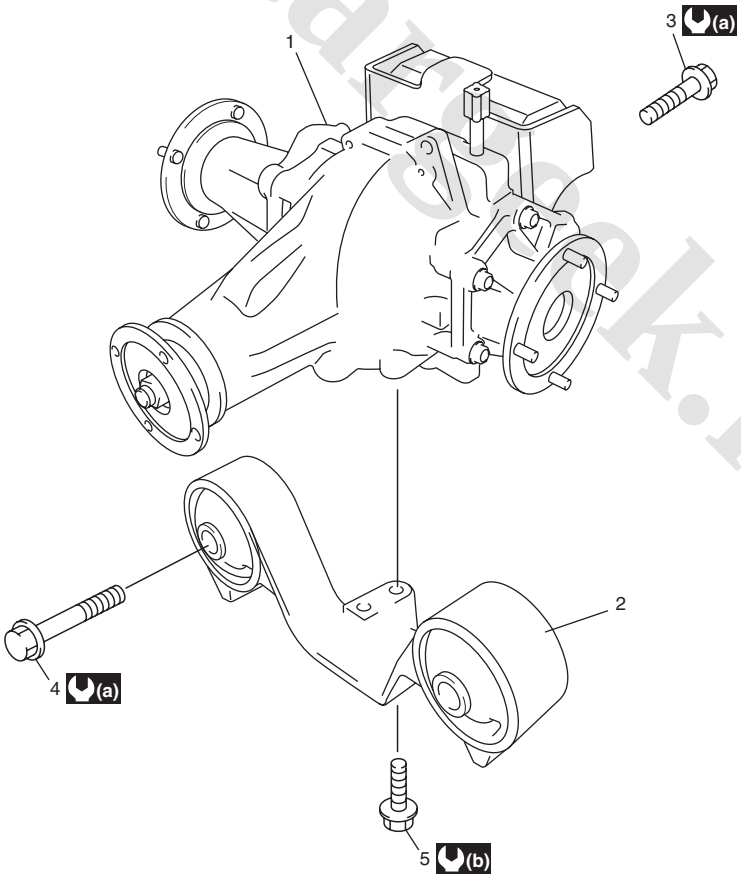


I5JB0A322002-03

| | |
|---|---|
| 1. Rear differential | 4. Front mounting bracket bolt |
| 2. Front mounting bracket | (a) : 120 N·m (12.0 kgf-m, 87.0 lb-ft) |
| 3. Rear mounting bolt | (b) : 50 N·m (5.0 kgf-m, 36.5 lb-ft) |

www.cargeek.ir

www.CarGeek.ir


## Rear Differential Dismounting and Remounting

S5JB0A3226012

### Dismounting

1) Lift up vehicle and drain oil from rear differential.
2) Remove rear propeller shaft referring to “Propeller Shaft Removal and Installation: in Section 3D”.
3) Remove exhaust center pipe referring to “Exhaust System Components: in Section 1K”.
4) Remove rear drive shafts referring to “Rear Drive Shaft Assembly Removal and Installation: Rear in Section 3A”.
5) Dismount rear differential as follows.
   - For M16 engine model
     a. Remove fuel tank cover (1).

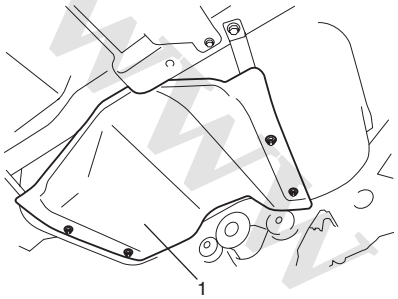


I5JB0A322006-01

     b. Support rear differential with transmission jack.
     c. Loosen rear differential mounting front bolts (1) and rear bolts (2).
     Do not remove them in this step.

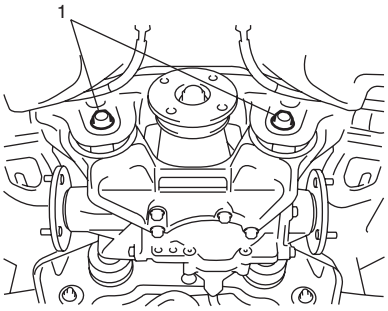


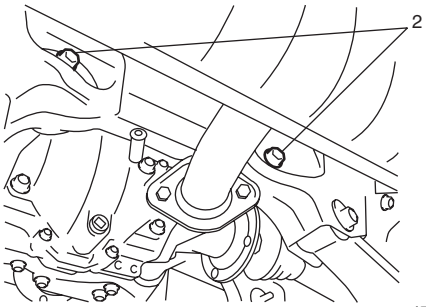


I5JB0A322003-01

     d. Remove rear suspension frame mount front bolts (1).

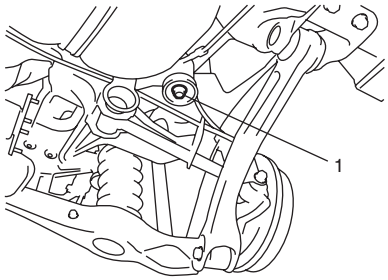


I5JB0A322004-01

**⚠ WARNING**

**Do not loosen rear suspension frame rear bolts more than 8 turns. Otherwise, rear suspension frame may fall and cause personal injury.**

     e. Loosen rear suspension frame mount rear bolts gradually within 8 turns until rear differential mounting front bolts can be removed.

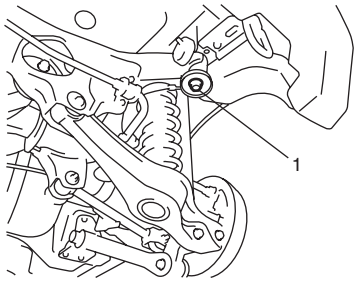


I5JB0A322005-01

     f. Remove rear differential mounting front and rear mounting bolts, and then lower rear differential.
     g. Tighten temporarily rear suspension frame mount front and rear bolts.
   - For J20 engine model
     a. Support rear differential with transmission jack.
     b. Remove front and rear mounting bolts, and then lower rear differential.

www.cargeek.ir

www.CarGeek.ir

### Remounting

Reverse dismounting procedure for remounting noting the following.

- Tighten rear differential mounting front and rear bolts to specified torque.

  **Tightening torque**
  **Rear differential front mounting bolt: 120 N·m ( 12.0 kgf-m, 87.0 lb-ft)**
  **Rear differential rear mounting bolt: 120 N·m ( 12.0 kgf-m, 87.0 lb-ft)**

- Tighten rear suspension frame front and rear bolts to specified torque referring to “Rear Suspension Construction: in Section 2C”.
- Fill rear differential oil referring to “Rear Differential Oil Change: Rear”.

## Rear Differential Components

S5JB0A3226001

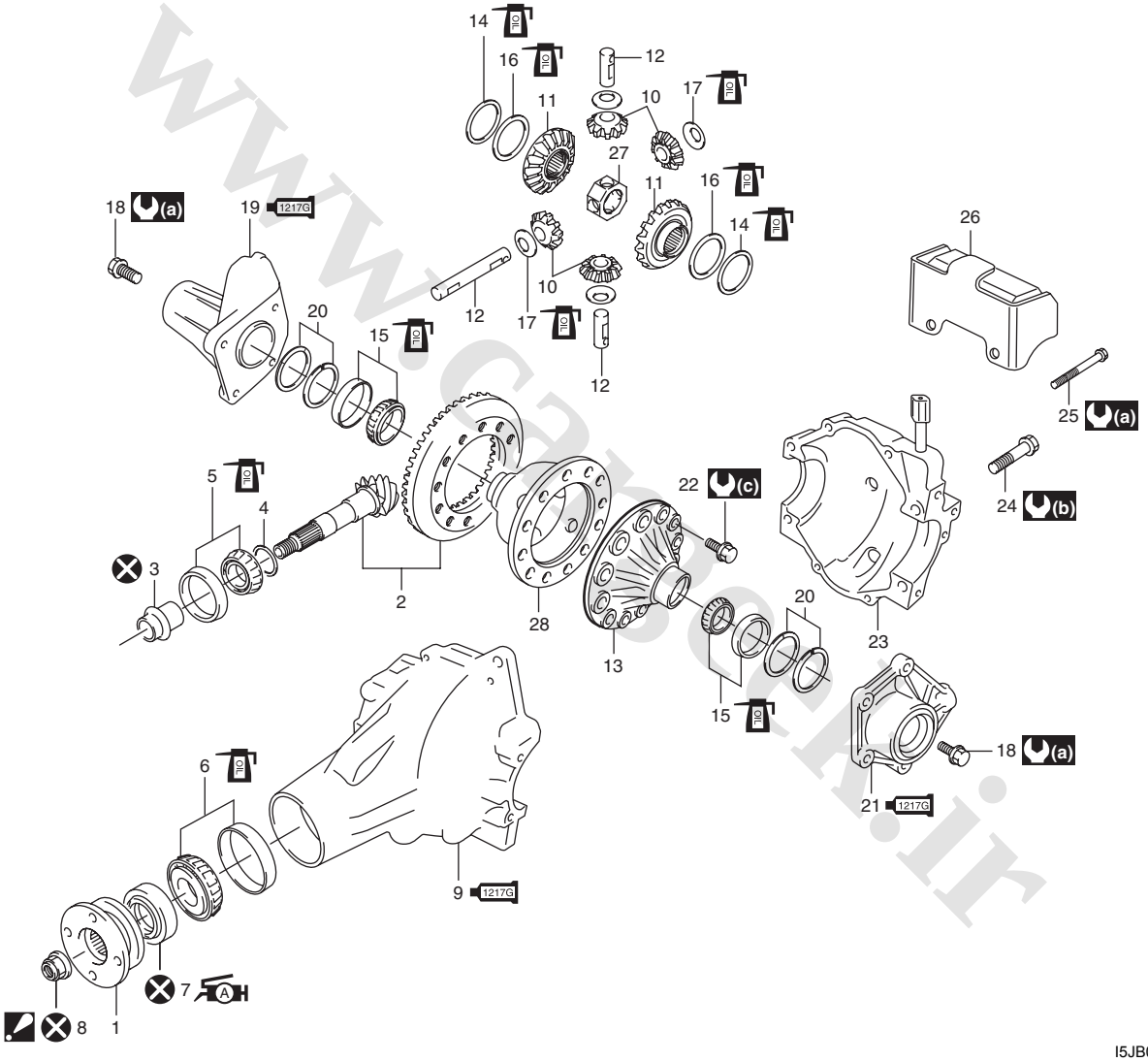


I5JB0A322001-09

| | |
|---|---|
| 1. Universal joint flange | 18. Retainer bolt |
| 2. Hypoid gear set | 1217G 19. Rear drive right retainer<br>: Apply sealant 99000-31260 to mating surface of right retainer, carrier and rear cover. |
| 3. Bevel pinion spacer | 20. Shim |
| 4. Shim | 1217G 21. Rear drive left retainer<br>: Apply sealant 99000-31260 to mating surface of left retainer, carrier and rear cover. |
| 5. Rear bearing | 1322 22. Bevel gear bolt<br>: Apply thread lock cement 99000-32110 to thread part of bolt. |
| 6. Front bearing | 23. Rear cover |
| A 7. Oil seal<br>: Apply grease 99000-25010 to oil seal lip. | 24. Rear cover bolt No.1 bolt |

www.cargeek.ir

www.CarGeek.ir


| | |
|---|---|
| 8. Flange nut<br>: After tightening nut so as rotation torque of bevel pinion shaft to be in specified value, caulk nut securely. | 25. Rear cover bolt No.2 bolt |
| 9. Differential carrier | 26. Dynamic damper (if equipped) |
| 10. Differential pinion | 27. Pinion joint |
| 11. Differential gear | 28. Differential right case |
| 12. Pinion shaft | (a) : 50 N·m (5.0 kgf-m, 36.5 lb-ft) |
| 13. Differential left case | (b) : 85 N·m (8.5 kgf-m, 61.5 lb-ft) |
| 14. Thrust washer | (c) : 40 N·m (4.0 kgf-m, 29.5 lb-ft) + 50° |
| 15. Differential side bearing | : Do not reuse. |
| 16. Spring washer | : Apply differential oil. |
| 17. Pinion washer | |

## Rear Differential Assembly Disassembly and Reassembly

S5JB0A3226013

### Disassembly

1) Drive out rear drive right and left shaft using special tools.

**Special tool**
**(A): 09942–15511**
**(B): 09943–17912**

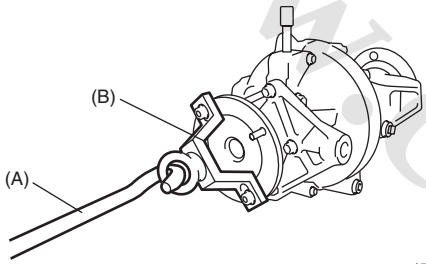


I5JB0A322007-01

2) Remove rear drive right and left retainers.
3) Tapping rear cover flanges with plastic hammer, remove rear cover (1) and dynamic damper (if equipped).

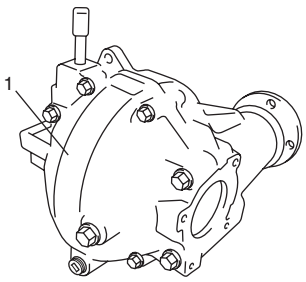


I5JB0A322008-01

4) Disassembly rear drive right retainer as follows, if necessary.
   a) Remove oil seal (1) using special tool.

**Special tool**
**(A): 09913–50121**

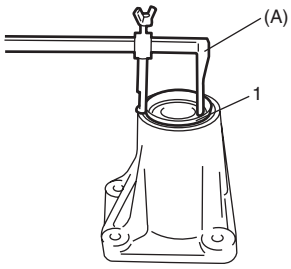


I5JB0A322009-01

   b) Remove snap ring.

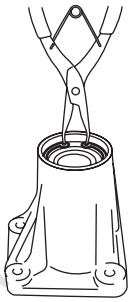

I5JB0A322010-01

   c) Drive out rear drive shaft bearing using special tools.

**Special tool**
**(A): 09930–30104**
**(B): 09941–64511**

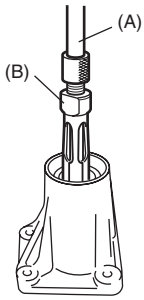


I5JB0A322011-01

www.cargeek.ir

www.CarGeek.ir

5) Disassembly rear drive left retainer in the same manner at Step 4), if necessary.
6) Take out differential assembly (1), outer race and shim all at once.

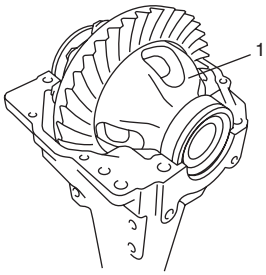


I5JB0A321012-02

7) Pull out differential side bearing (1) using special tools.

**Special tool**
**(A): 09913–65135**
**(B): 09925–86010**

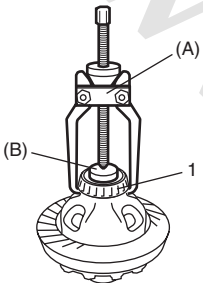


I5JB0A321013-02

8) Remove drive bevel gear (hypoid gear), differential gears, differential pinions and pinion shaft as follows.
   a) With aluminum plates (2) placed on vise first, grip differential case with it and remove drive bevel gear (hypoid gear) (3) by removing its bolts (1).

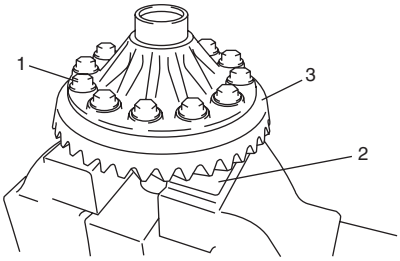


I5JB0A321014-02

   b) Remove pinion shafts (1), differential gears, washers, differential pinions, spring washers, thrust washers and pinion joint.

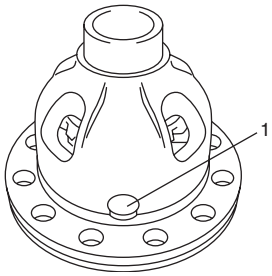


I5JB0A321015-02

9) Remove drive bevel pinion (hypoid gear) assembly as follows.
   a) Hold joint flange with special tool and then remove flange nut by using power wrench (4 – 10 magnification) (2).

**Special tool**
**(A): 09922–66021**

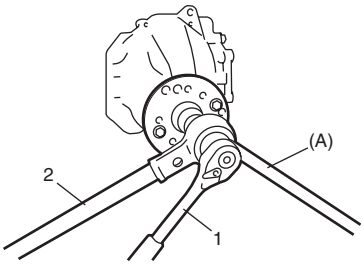


I5JB0A321016-02

| |
|---|
| 1. Socket wrench |

   b) Make mating marks (1) on drive bevel pinion and companion flange.

**⚠ CAUTION**

**Do not make mating mark on the coupling surface of the flange.**

   c) Remove flange (2) from drive bevel pinion. Use special tool if it is hard to remove.

**Special tool**
**(A): 09913–65135**
**(B): 09925–88210**

www.cargeek.ir

www.CarGeek.ir


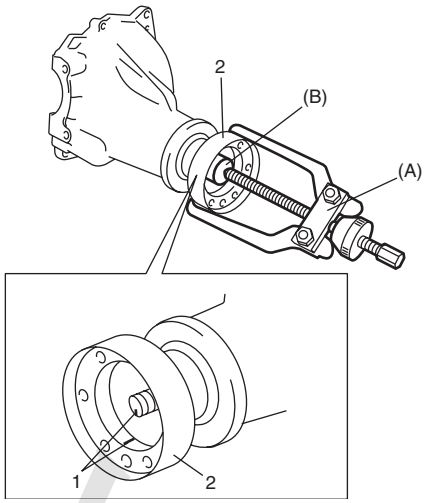


I5JB0A321017-02

d) Remove drive bevel pinion (1) with rear bearing, shim and spacer from carrier.
If it is hard to remove, screw an used nut (2) into drive bevel pinion and hammer (3) on that nut with a plastic hammer but never directly on drive bevel pinion.

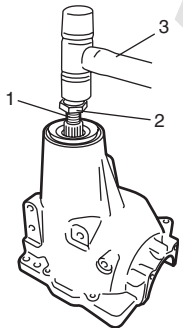


I5JB0A321018-01

e) Remove drive bevel pinion rear bearing (2) by using bearing puller (3) and hydraulic press.

**⚠ CAUTION**

**To avoid rear bearing from being damaged, support it at flat side of bearing puller.**

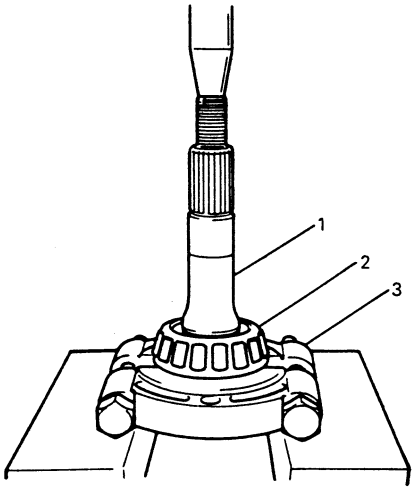


I1JA01322006-01

| |
|---|
| 1. Drive bevel pinion |

10) Remove oil seal (1) using special tool.

**Special tool**
**(A): 09913–50121**

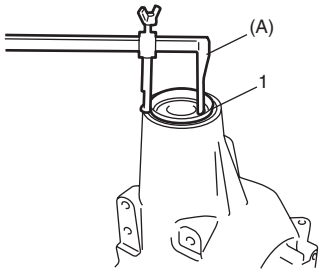


I5JB0A321019-01

11) Using a hammer and brass bar (1), drive out front bearing outer race (2).

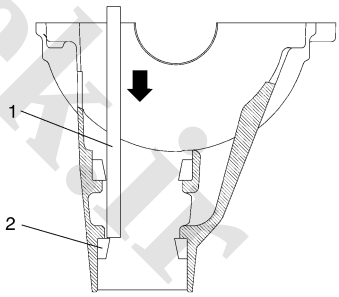


I5JB0A321020-01

12) Drive out rear bearing outer race (1) in the same manner as Step 11).

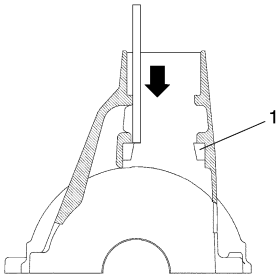


I5JB0A321021-01

www.cargeek.ir

www.CarGeek.ir

**Reassembly**

Judging from faulty conditions noted before disassembly and what is found through visual check of bearing and gear tooth etc. after disassembly, prepare replacing parts and proceed to reassembly according to procedures as described.

**⚠ CAUTION**

- **Drive bevel gear and pinion must be replaced as a set when either replacement becomes necessary.**
- **When replacing taper roller bearing, replace as inner race and outer race assembly.**

1) For press-fitting drive bevel pinion bearing outer races, use special tools and press as shown in the figure.

**Special tool**
**(A): 09924–74510**
**(B): 09925–14520**
**(C): 09913–75510**

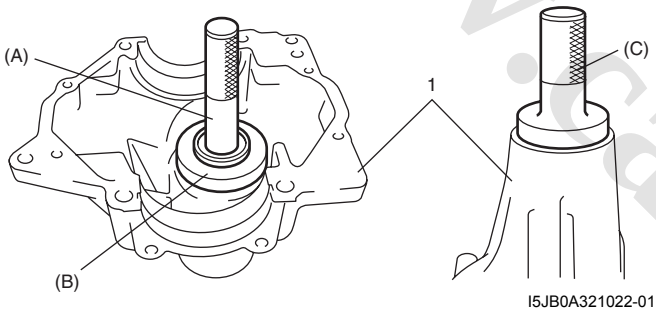

I5JB0A321022-01

| | |
|---|---|
| 1. | Differential carrier |

2) After applying differential oil to differential gear (4), pinions (5), pinion shafts (6), pinion washer, thrust washer (2) and spring washer (1), install them in differential right case (3).
For correct installing direction of thrust washer (2) and spring washer (1), refer to the figure.

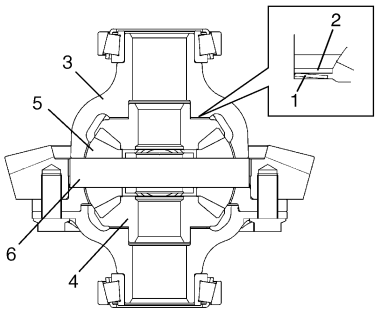

I5JB0A321023-05

3) Check differential pinion gear (1) for smooth rotation.

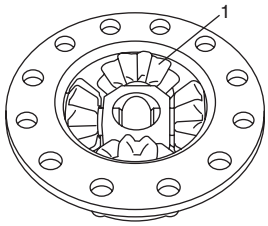

I5JB0A322015-01

4) Put drive bevel gear (3) on differential case (1) and fasten them with bolts (2) by tightening them to specified torque. Use thread lock cement for bolts (2).

**⚠ CAUTION**

**Use of any other bolts than that specified is prohibited.**

**"A": Thread lock cement 99000–32110 (Thread Lock Cement Super 1322)**

**Tightening torque**
**Bevel gear bolt (a): Tighten 40 N·m (4.0 kgf-m, 29.5 lb-ft) + 50°**

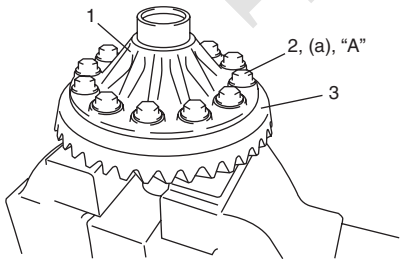

I5JB0A321025-01

www.cargeek.ir

www.CarGeek.ir


5) Install special tool to differential case assembly (2) and check differential gear for preload. If preload exceeds specified value, check if foreign matter is caught or gear is damaged.

**Special tool**
**(B): 09928–06510**

**Differential gear preload**
**Max. 2.5 N·m (0.25 kgf-m, 1.8 lb-ft)**

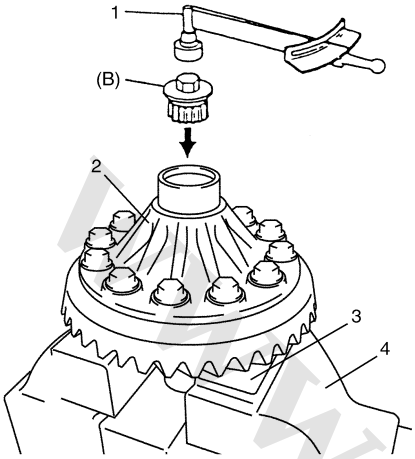

I5JB0A321026-01

| | |
|---|---|
| 1. | Torque wrench |
| 3. | Aluminum plate |
| 4. | Vise |

6) Press-fit left side bearing (1) with special tool and hydraulic press.

**Special tool**
**(A): 09913–75821**
**(B): 09924–84510–004**

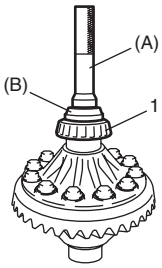

I5JB0A321027-01

7) Press-fit right side bearing (1) with special tools and hydraulic press.

**NOTE**

**Be sure to use bearing holder for the purpose of protecting lower bearing.**

**Special tool**
**(A): 09913–75821**
**(B): 09924–84510–004**
**(C): 09924–84510–005**

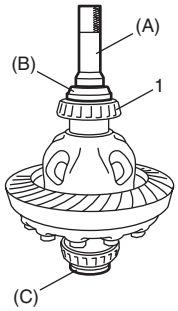

I5JB0A321028-02

www.cargeek.ir

www.CarGeek.ir

8) To engage drive bevel pinion and gear correctly, it is pre-required to install drive bevel pinion to differential carrier properly by using adjusting shim as described on the followings. Shown below is relative positions of drive bevel pinion, differential carrier and mounting dummy.

**Special tool**
**(A): 09900–20607**
**(B): 09926–78320**
**(C): 09922–75222**
**(D): 09951–16070**
**(E): 09951–46010**
**(F): 09926–78311–002**
**(G): 09922–76520**

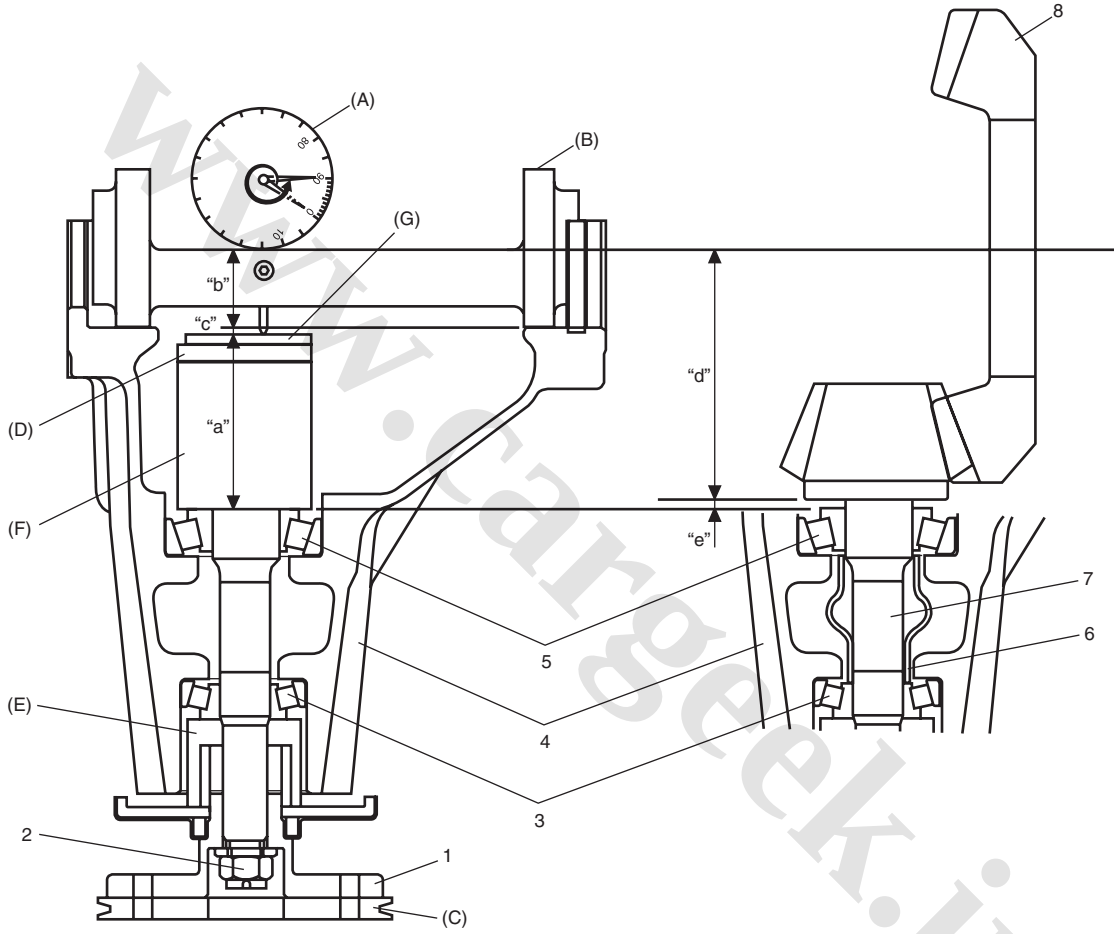


I5JB0A321029-02

| | |
|---|---|
| 1. Universal Joint flange | 8. Drive bevel gear |
| 2. Nut | "a": Pinion dummy height + Attachment height |
| 3. Front bearing | "b": Axle dummy radius |
| 4. Differential carrier | "a" + "b": Mounting dummy size 103.0 mm/4.0551 in. |
| 5. Rear bearing | "c": Measured dimension |
| 6. Spacer | "d": Drive bevel pinion mounting distance 102.0 mm/4.0157 in. |
| 7. Drive bevel pinion | "e": Shim size for mounting distance adjustment (= "c" + 1) |

www.cargeek.ir

www.CarGeek.ir


9) Install special tools with bearings (3) and flange (2) to differential carrier (1).

**NOTE**

**This installation requires no spacer or oil seal.**

**Special tool**
**(E): 09951–46010**
**(F): 09926–78311–002**

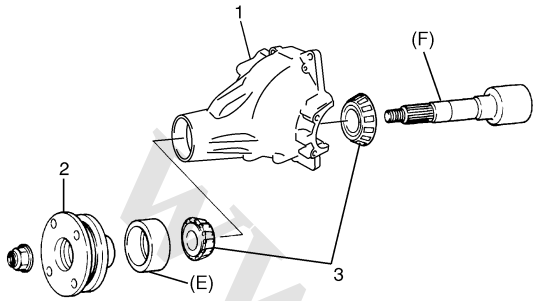

I5JB0A321030-01

10) Tighten flange nut (1) so that specified bearing preload is obtained.

**NOTE**

- **Before taking measurement with spring balance (2) or torque wrench (3), check for rotation by hand and apply small amount of differential oil to bearings.**
- **On measuring preload, rotate the drive bevel pinion about 1 rotation per 2 seconds.**

**Special tool**
**(C): 09922–75222**
**(F): 09926–78311–002**

**Pinion bearing preload**
**0.9 – 1.7 N·m (9.0 – 17.0 kg-cm, 7.8 – 14.7 lb-in.)**

**Spring measure reading with special tool**
**20 – 40 N (2.0 – 4.0 kg, 4.4 – 8.8 lb)**

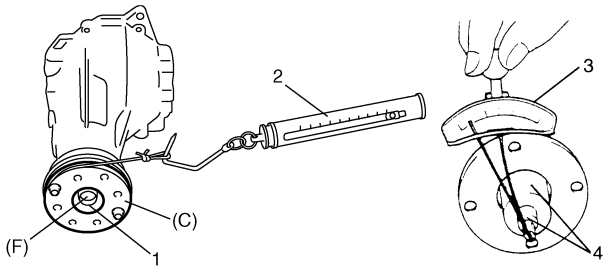

I5JB0A321031-01

| | |
|---|---|
| 4. | Socket with adapter |

11) Set dial gauge to mounting dummy and make 0 (zero) adjustment on surface plate (1).

**NOTE**

- **When setting dial gauge to mounting dummy, tighten screw (2) lightly. Be careful not to overtighten it, which will cause damage to dial gauge.**
- **With dial gauge set, turn dummy back and force by hand a couple of times and attain accurate 0 (zero) adjustment.**
- **It is desirable that short pointer indicates beyond 2 mm when long one is at 0 (zero).**

**Special tool**
**(A): 09900–20607**
**(B): 09926–78320**

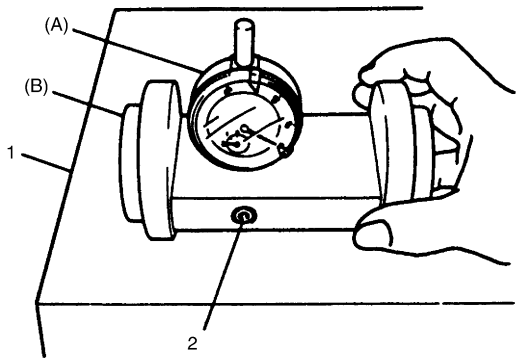

IYSQ01322033-01

12) Place zero-adjusted mounting dummy and dial gauge set on pinion mounting dummy and take measurement between zero position and extended dial gauge measuring tip.

**NOTE**

- **Repeat turning back and force of dummy and measure distance as far as top surface of pinion dummy accurately.**
- **When dial gauge measuring tip extends from 0 (zero) position, pointer turns counterclockwise.**
- **Measured value may exceed 1 mm. Therefore, it is also necessary to know reading of short pointer.**

www.cargeek.ir

www.CarGeek.ir

**Special tool**
**(A): 09900–20607**
**(B): 09926–78311**
**(D): 09951–16070**
**(F): 09926–78311–002**
**: 09922–76520**

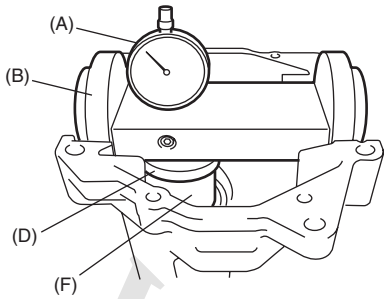

I5JB0A321032-01

13) Obtain adjusting shim thickness by the following equation.
"1 mm (0.039 in.)" is "a" + "b" (Mounting dummy size) – "d" (Drive bevel pinion mounting distance)

| | | | | | | |
|---|---|---|---|---|---|---|
| Necessary shim thickness "e" | = | Mounting dummy size 103.0mm / 4.0551 in. "a" + "b" | + | Measured dimension "c" | – | Drive bevel pinion mounting distance 102 mm / 4.0157 in. |

14) Select adjusting shim(s) (2) closest to calculated value from among the following available sizes and put it in place and then press-fit rear bearing (1).

**Special tool**
**(G): 09913–85210**
**(H): 09940–53111**

**Available shim thickness**
**1.00, 1.03, 1.06, 1.09, 1.12, 1.15, 1.18, 1.21,1.24, 1.27, 1.30 and 0.3 mm**
**(0.039, 0.040, 0.042, 0.043, 0.044, 0.045, 0.046, 0.047 0.048, 0.049, 0.050 and 0.012 in.)**

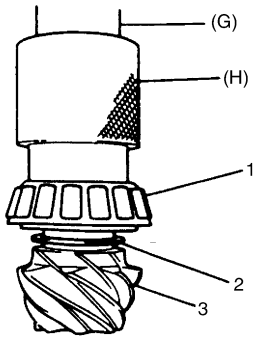

I5JB0A321033-01

| | |
|---|---|
| 3. | Drive bevel pinion |

15) With new pinion spacer (3) inserted as shown in the figure, install front bearing (5) to differential carrier (4).

**NOTE**

- **Make sure to use new spacer for reinstallation.**
- **Apply differential oil to bearings.**

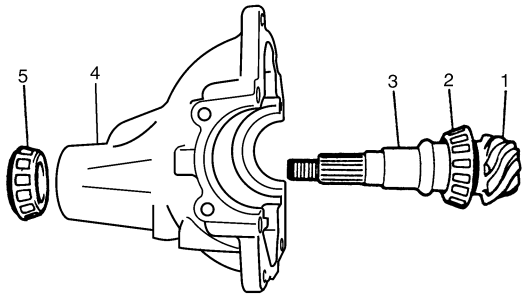

I5JB0A321034-01

| | |
|---|---|
| 1. | Drive bevel pinion |
| 2. | Rear bearing |

16) Using special tool and plastic hammer, drive oil seal (2) into differential carrier (1) as shown in figure. Then apply grease "A" to oil seal lip.

**"A": Grease 99000–25010 (SUZUKI Super Grease A)**

**Special tool**
**(A): 09951–18210**

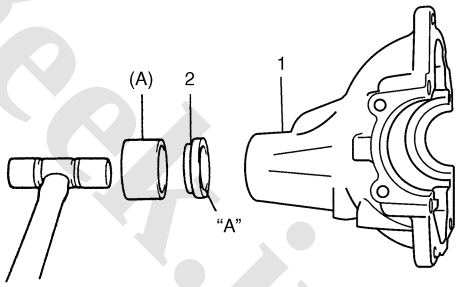

I5JB0A321035-01

www.cargeek.ir

www.CarGeek.ir


17) While tightening flange nut gradually with special tool and power wrench (4 – 10 magnification) (1), set preload of pinion to specification.

**NOTE**

- **Before taking measurement with spring balance (3) or torque wrench (4), check for smooth rotation by hand.**
- **On measuring preload, rotate the drive bevel pinion about 1 rotation per 2 seconds.**
- **Be sure to tighten gradually and carefully till specified starting torque is obtained. Turning back overtightened flange nuts should be avoided.**

**Pinion bearing preload**
**0.9 – 1.7 N·m (9.0 – 17.0 kg-cm, 7.8 – 14.7 lb-in.)**

**Spring measure reading with special tool**
**20 – 40 N (2.0 – 4.0 kg, 4.4 – 8.8 lb)**

**Special tool**
**(A): 09922–75222**
**(B): 09922–66021**

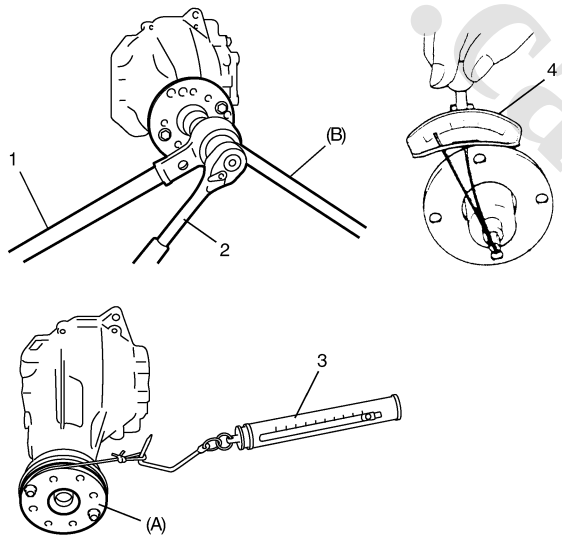


I5JB0A321036-02

| | |
|---|---|
| 2. | Socket wrench |

18) Select differential side bearing shim as follows.

a) Measure dimension “a” and “b” using vernier caliper.

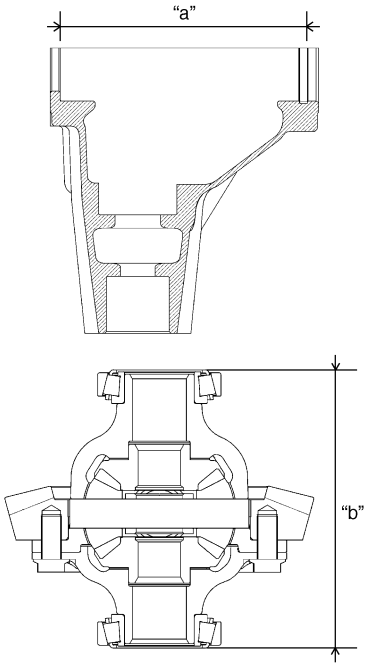


I5JB0A321037-04

b) Calculate dimension “a” – “b”, and select shims from among following available size so that total of thickness of right side and left side shims may reach the calculated value.

**NOTE**

**Select shims so that thickness of right side shims and left side shims become almost even.**

**Available shim thickness**
**Right side: 1.75, 1.85, 1.95, 2.00, 2.05, 2.15 and 2.25 mm (0.069, 0.073, 0.077, 0.079, 0.081, 0.085 and 0.089 in.)**
**Left side: 2.75, 2.85, 2.95, 3.00, 3.05, 3.15 and 3.25 mm (0.108, 0.112, 0.116, 0.118, 0.120, 0.124 and 0.128 in.)**

www.cargeek.ir

www.CarGeek.ir

19) To measure bevel gear backlash, set dial gauge (1) at right angle to bevel gear tooth, fix drive bevel pinion and read dial gauge while moving bevel gear.

**Special tool**
**(A): 09900–20607**
**(B): 09900–20701**

**NOTE**

- **Be sure to apply measuring tip of dial gauge at right angles to convex side of tooth.**
- **Measure at least 4 points on drive bevel gear periphery.**

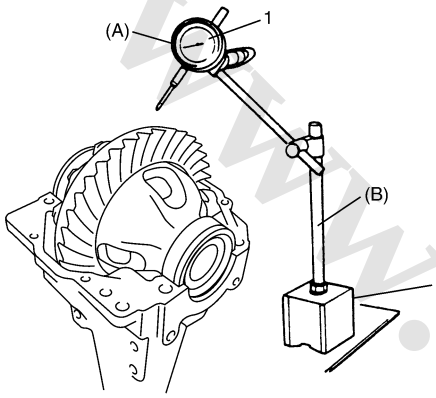

I5JB0A321038-03

20) Place bearing outer races on their respective bearings. Used left and right outer races are not interchangeable.

21) Install case assembly (1) in carrier (2).

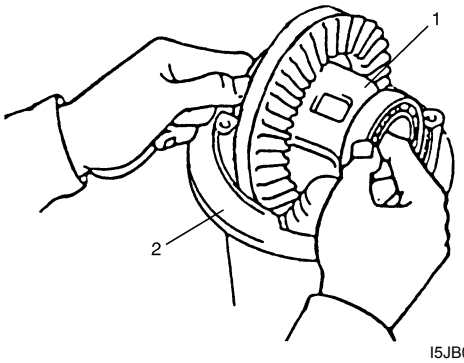

I5JB0A321039-01

22) As final step, check gear tooth contact as follows.
   a) After cleaning 10 drive bevel gear teeth, paint them with gear marking compound evenly by using brush (1) or sponge etc.
   b) Turn gear to bring its painted part in mesh with drive bevel pinion and turn it back and forth by hand to repeat their contact.
   c) Bring painted part up and check contact pattern, referring to the following table. If contact pattern is not normal, readjust or replace as necessary according to instruction in the table.

**NOTE**

**Be careful not to turn drive bevel gear more than one full revolution, for it will hinder accurate check.**

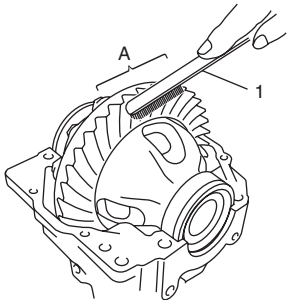

I5JB0A321040-02

| | |
|---|---|
| A: | Paint gear marking compound evenly |

www.cargeek.ir

www.CarGeek.ir


| Tooth Contact Pattern | Diagnosis and Remedy |
|---|---|
| 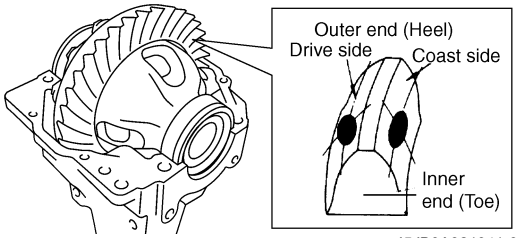 <br>I5JB0A321041-05 | Normal |
| <br>IYSQ01321072-01 | High Contact<br>Pinion is positioned too far from the center of drive bevel gear (1).<br>• Increase thickness of pinion (2) height adjusting shim and position pinion closer to gear center.<br>• Adjust drive bevel gear backlash to specification.<br> 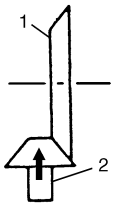 <br>IYSQ01321073-01 |
| <br>IYSQ01321074-01 | Low Contact<br>Pinion is positioned too close to the center of drive bevel gear (1).<br>• Decrease thickness of pinion (2) height adjusting shim and position pinion farther from gear center.<br>• Adjust drive bevel gear backlash to specification.<br> 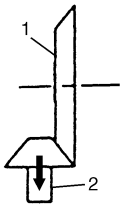 <br>IYSQ01321076-01 |
| 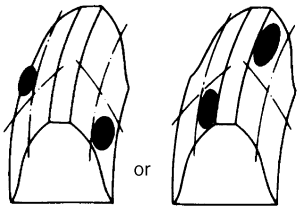 <br>IYSQ01321077-01 | If adjustment is impossible, replace differential carrier. |
| 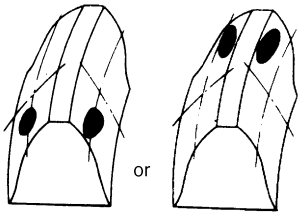 <br>IYSQ01321078-01 | • Check seating of bevel gear or differential case. (Check bevel gear for runout.)<br>• If adjustment is impossible, replace drive bevel gear and pinion set or differential carrier. |
| 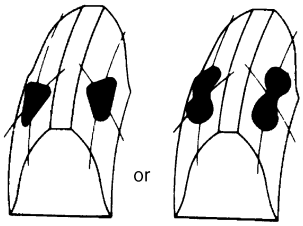 <br>IYSQ01321079-01 | Replace drive bevel gear and pinion set or differential case. |

www.cargeek.ir

www.CarGeek.ir

23) Upon completion of gear tooth contact check in Step 22), caulk flange nut (2) with caulking tool (1) and hammer.

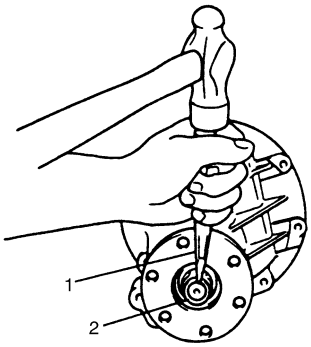


I1JA01322021-01

24) Install rear cover (1) to differential carrier (2).

**Tightening torque**
**Rear cover bolt No.1 (a): 50 N·m (5.0 kgf-m, 36.5 lb-ft)**
**Rear cover bolt No.2 (b): 85 N·m (8.5 kgf-m, 61.5 lb-ft)**

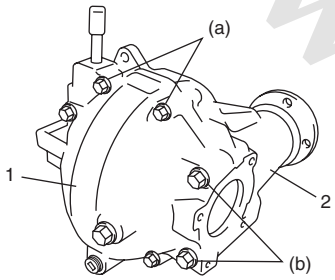


I5JB0A321042-01

25) Assembly rear drive right retainer as follows.

a) Install rear drive shaft bearing (1) using special tool and press (2).

**Special tool**
**(A): 09913–75520**

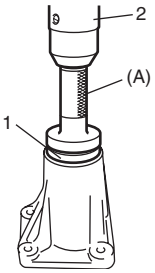


I5JB0A322012-01

b) Install snap ring.

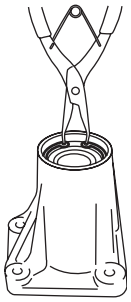

I5JB0A322010-01

c) Install oil seal using special tools as shown in figure.

**<u>Distance between retainer surface and oil seal</u>**
**"a": 2.5 – 3.0 mm (0.10 – 0.12 in.)**

**Special tool**
**(A): 09924–74510**
**(B): 09951–16090**

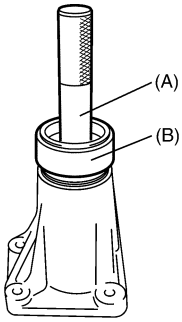


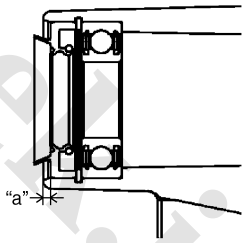


I5JB0A322013-02

www.cargeek.ir

www.CarGeek.ir


26) Assembly rear drive left retainer in the same manner at Step 25) in this assembly procedure.
27) Clean mating surface of right retainer, carrier (1) and rear cover (2), apply sealant to carrier and rear cover as shown in figure by such amount that its section is 1.5 mm (0.059 in.) in diameter, mate right retainer with carrier and rear cover, and then tighten bolts to specified torque.

**"A": Sealant 99000–31260 (SUZUKI Bond No.1217G)**

**Tightening torque**
**Retainer bolt: 50 N·m (5.0 kgf-m, 36.5 lb-ft)**

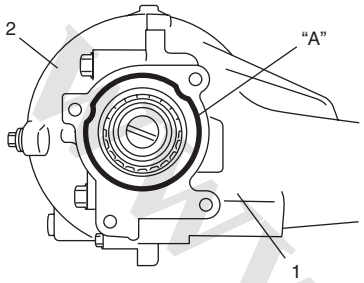

I5JB0A321048-01

28) Clean mating surface of left retainer, carrier (1) and rear cover (2), apply sealant to carrier and rear cover as shown in figure by such amount that its section is 1.5 mm (0.059 in.) in diameter, mate left retainer with carrier and rear cover, and then tighten bolts to specified torque.

**"A": Sealant 99000–31260 (SUZUKI Bond No.1217G)**

**Tightening torque**
**Retainer bolt: 50 N·m (5.0 kgf-m, 36.5 lb-ft)**

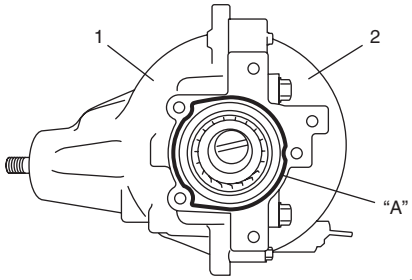

I5JB0A322014-01

29) Install rear drive right and left shaft using plastic hammer.

### Rear Differential Inspection

S5JB0A3226014

Refer to "Front Differential Inspection: Front".

## Specifications

### Tightening Torque Specifications

S5JB0A3227001

| Fastening part | Tightening torque | | | Note |
|---|---|---|---|---|
| | N·m | kgf-m | lb-ft | |
| Rear differential front mounting bolt | 120 | 12.0 | 87.0 | ☞ |
| Rear differential rear mounting bolt | 120 | 12.0 | 87.0 | ☞ |
| Bevel gear bolt | Tighten 40 N·m (4.0 kgf-m, 29.5 lb-ft) + 50° | | | ☞ |
| Rear cover bolt No.1 | 50 | 5.0 | 36.5 | ☞ |
| Rear cover bolt No.2 | 85 | 8.5 | 61.5 | ☞ |
| Retainer bolt | 50 | 5.0 | 36.5 | ☞ / ☞ |

**NOTE**

**The specified tightening torque is also described in the following.**
**"Rear Differential Unit Components: Rear"**
**"Rear Differential Components: Rear"**

**Reference:**
For the tightening torque of fastener not specified in this section, refer to "Fastener Information: in Section 0A".

www.cargeek.ir

www.CarGeek.ir

# Special Tools and Equipment

## Recommended Service Material

S5JB0A3228001

| Material | SUZUKI recommended product or Specification | | Note |
|---|---|---|---|
| Grease | SUZUKI Super Grease A | P/No.: 99000–25010 | ☞ |
| Sealant | SUZUKI Bond No.1217G | P/No.: 99000–31260 | ☞ / ☞ |
| Thread lock cement | Thread Lock Cement Super 1322 | P/No.: 99000–32110 | ☞ |

**NOTE**

**Required service material is also described in the following.**
**“Rear Differential Components: Rear”**

## Special Tool

S5JB0A3228002

| | |
|---|---|
| 09900–20607<br>Dial gauge<br>☞ / ☞ / ☞ / ☞<br> 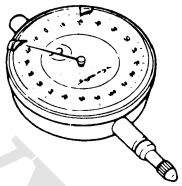 | 09900–20701<br>Magnetic stand<br>☞<br> 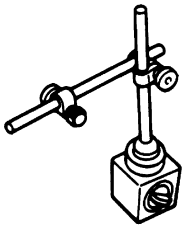 |
| 09913–50121<br>Oil seal remover<br>☞ / ☞<br> 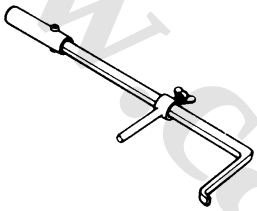 | 09913–65135<br>Bearing puller<br>☞ / ☞<br> 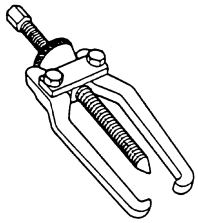 |
| 09913–75510<br>Bearing installer<br>☞<br> 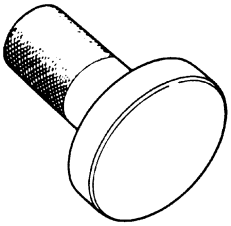 | 09913–75520<br>Bearing installer<br>☞<br> 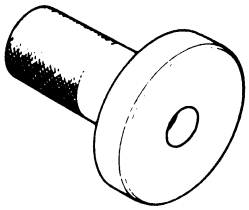 |
| 09913–75821<br>Bearing installer attachment<br>☞ / ☞<br> 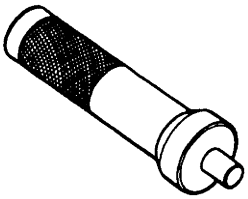 | 09913–85210<br>Bearing installer<br>☞<br> 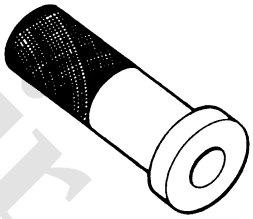 |
| 09922–66021<br>Flange holder<br>☞ / ☞<br> 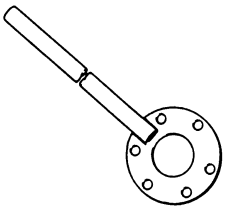 | 09922–75222<br>Differential gear preload adjuster<br>☞ / ☞ / ☞<br> 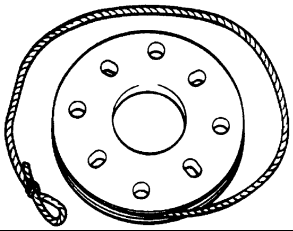 |
| 09922–76520<br>Bevel pinion gauge block<br>☞ / ☞<br> 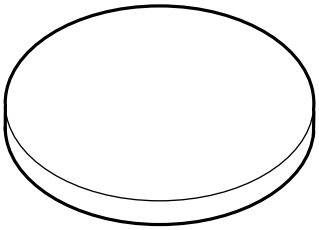 | 09924–74510<br>Bearing and oil seal handle<br>☞ / ☞<br> 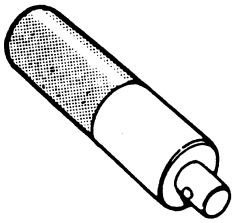 |

www.cargeek.ir

www.CarGeek.ir


| | |
|---|---|
| 09924–84510–004<br>Bearing installer attachment<br>☞ / ☞ | 09924–84510–005<br>Bearing installer attachment (D)<br>☞ |
| 09925–14520<br>Bearing and oil seal installer (80 x 50 mm)<br>☞ | 09925–86010<br>Bearing puller attachment<br>☞ |
| 09925–88210<br>Bearing puller attachment<br>☞ | 09926–78311–002<br>Pinion mounting dummy<br>☞ / ☞ / ☞ / ☞ |
| 09926–78311<br>Differential bevel pinion dummy<br>☞ | 09926–78320<br>Mounting dummy<br>☞ / ☞ |
| 09928–06510<br>Differential torque checking tool<br>☞ | 09930–30104<br>Sliding shaft<br>☞ |
| 09940–53111<br>Differential side bearing installer<br>☞ | 09941–64511<br>Bearing and oil seal remover (30 mm Min.)<br>☞ |
| 09942–15511<br>Sliding hammer<br>☞ | 09943–17912<br>Wheel hub remover<br>☞ |
| 09951–16070<br>Shim adjuster attachment<br>☞ / ☞ | 09951–16090<br>Oil seal installer<br>☞ |

www.cargeek.ir

www.CarGeek.ir

| | |
|---|---|
| 09951–18210<br>Oil seal remover & installer<br>No. 2<br>☞ 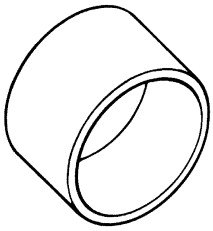 | 09951–46010<br>Drive shaft oil seal installer<br>☞ / ☞ 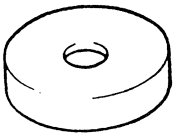 |

www.cargeek.ir

www.cargeek.ir

www.CarGeek.ir


# Transfer

## Motor-Shift Type (Transfer with Shift Actuator)

### Precautions

#### Transfer Warning

S5JB0A3310002

**⚠ WARNING**

**This transfer has a center differential.**
**When testing with 2-wheel chassis dynamometer or speedometer tester (which tester roller is driven by vehicle wheels), be sure to make the vehicle as rear wheel drive or as front wheel drive temporarily as follows.**
**Otherwise, front wheels drive rear wheels or vise-versa and personal injury may result.**

1) Remove front propeller shaft or rear propeller shaft referring to “Propeller Shaft Removal and Installation: in Section 3D”.
2) Install special tool (cap) to flange yoke cover hole (front or rear) of transfer (1) and fix it to transfer or hook with string to prevent oil leakage from transfer.

   **Special tool**
   **(A): 09928–36510**

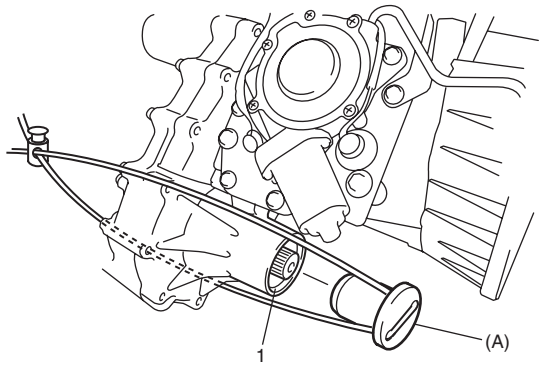


I5JB0A331107-03

3) Pour specified oil into transfer up to lever plug hole if front propeller shaft is removed.
4) Shift transfer to 4H-lock position as follows.
   - M16 engine model:
     Remove lever bolt (1) on transfer, push down lever to 4H-lock position (2) and fix lever with bolt.

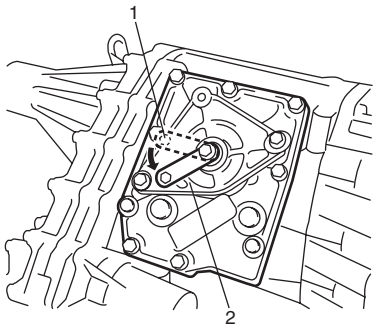


I5JB0A331108-01

   - J20 engine model:
     Shift transfer to 4H-lock position by turning transfer switch.

#### Precautions in Diagnosing Trouble

S5JB0A3310001

- Do not disconnect the following parts before confirming diagnostic information (DTC, etc.) stored in 4WD control module memory. These actions will erase memorized information in 4WD control module memory.
  - Disconnection of coupler from 4WD control module
  - Disconnection of battery cable from battery
  - Disconnection of ground wire harness of 4WD control module
  - Disconnect main fuse from fuse box
- Diagnostic information stored in 4WD control module memory can be cleared as well as checked by using SUZUKI scan tool. Before using scan tool, read its Operator’s (Instruction) Manual carefully to have good understanding as to what functions are available and how to use it.
- Be sure to read “Precautions for Electrical Circuit Service:” before inspection and observe what is written there.

### General Description

#### Transfer Description

S5JB0A3311010

The aluminum transfer case directly connected to the back of the transmission contains input gear, counter gear, rear output shaft, front output shaft, center differential, drive chain and their accompanying gears, hubs, sleeves, fork, etc. The center differential is installed in the transfer. With the torque induction type LSD used in the center differential, the effect of LSD works when a rotation difference between front and rear wheels is occurring.

www.cargeek.ir

www.CarGeek.ir

The transfer has such a selective mechanism as to enable the shift actuator to make selection of high speed (direct connection with transmission output: main shaft), low speed (speed reduction by input gear, counter gear and low gear) or neutral by way of the reduction shift sleeve located between the input gear and low gear, and selection of center differential lock or not by way of the differential lock clutch sleeve located at the center of the rear output shaft. The case has an oil pump to provide proper lubrication.

## Transfer Shift Control System Components

S5JB0A3311001

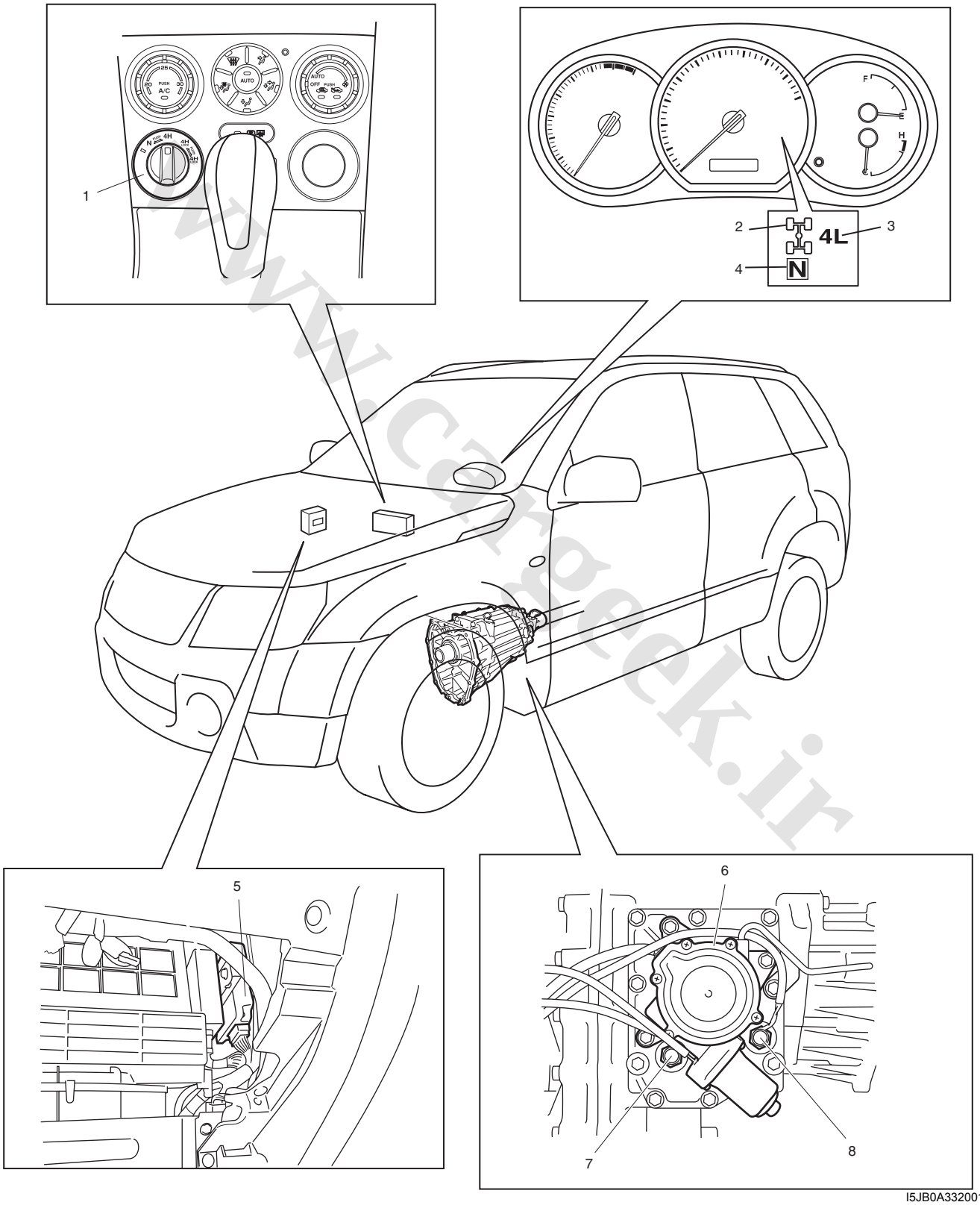


I5JB0A332001-01

www.cargeek.ir

www.CarGeek.ir


| | | |
|---|---|---|
| 1. Transfer switch | 4. N indicator | 7. Center differential lock switch |
| 2. Differential lock indicator | 5. 4WD control module | 8. 4L/N switch |
| 3. 4L indicator | 6. Transfer actuator | |

## 4WD Control System Description

S5JB0A3311002

### Transfer Shift Control

The 4WD control module controls the transfer shift actuator based on the signal from the transfer switch so that the transfer is shifted to the selected position (4H, 4H-lock, N or 4L-lock). (Shifting to the N position requires that the switch to “□” position (1) keep it there for about 10 seconds then turn it to “N” position.)
The transfer actuator consists of the actuator motor and the actuator motor position switch. The 4WD control module detects the position of the actuator motor using the position switch and controls the actuator motor running / stopping operation.
Also, the 4L/N switch and center differential lock switch that detect the each position of the High / Low shift fork and the differential lock shift fork are installed the transfer assembly. The 4WD control module detects the transfer actual shift position (4H, 4H-lock, N or 4L-lock) by the signals from the 4L/N switch and center differential lock switch as follows.

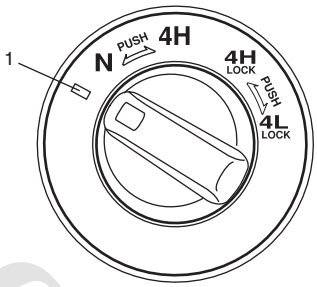


I5JB0A332002-01

### Relationship of transfer shift position and switches

| Switch | Transfer shift position | | | |
|---|---|---|---|---|
| | 4H | 4H-lock | N | 4L-lock |
| 4L/N switch | OFF | OFF | ON | ON |
| Center differential lock switch | ON | OFF | ON | OFF |

When the transfer shift actuator motor position detected by motor position switch and transfer actual shift position detected by the above-mentioned switches match, the 4WD control module judges that the transfer shifting is complete.

### Retry Control

When 4WD control module cannot judge the shifting to the target position, it commands to retry the shifting up to 3 times. If retry shifting is not possible, previous shift position is restored and notify failure of the shifting with the indicator and buzzer.

### Indicator And Buzzer Operation

The 4WD control module output operation signal of the differential lock indicator, 4L indicator, N indicator and the buzzer to BCM. Indicators and buzzer as follows in order to inform what state the transfer control system is.

www.cargeek.ir

www.CarGeek.ir

| Operation | | | Condition |
|---|---|---|---|
| Indicator | | Buzzer | |
| Differential lock indicator | OFF | — | • Ignition switch is OFF.<br>• Transfer is at 4H/N position. |
| | ON | — | • Within 2 seconds after ignition switch is turn ON (checking indicator operation).<br>• Transfer is at 4H-lock/4L-lock position. |
| | Flashes at 0.25 seconds for 3 times, at intervals of 20 seconds. | Sounds at 1 second at intervals of 20 seconds. | • The transfer shift position is different for transfer switch. |
| | Flashes at intervals of 0.25 seconds continuously | — | • 4WD control module detects DTC of 4WD control system. |
| | Flashes at intervals of 0.5 seconds continuously | — | • Transfer is shifting from 4H to 4H-lock.<br>• Transfer is shifting from 4H-lock to 4H.<br>• Transfer could not complete shifting to 4H-lock. |
| 4L indicator | OFF | — | • Ignition switch is OFF.<br>• Transfer is at 4H-lock/N position. |
| | ON | — | • Within 2 seconds after ignition switch is turn ON (checking indicator operation).<br>• Transfer is at 4L-lock position. |
| | Flashes at 0.25 seconds for 3 times, at intervals of 20 seconds. | Sounds at 1 second at intervals of 20 seconds. | • The transfer shift position is different for transfer switch. |
| | Flashes at intervals of 0.25 seconds continuously | — | • 4WD control module detects DTC of 4WD control system. |
| | Flashes at intervals of 0.5 seconds continuously | — | • Transfer is shifting from 4H-lock to 4L-lock.<br>• Transfer is shifting from 4L-lock to 4H-lock.<br>• Transfer could not complete shifting to 4L-lock. |
| N indicator | OFF | — | • Ignition switch is OFF.<br>• Transfer is at 4H/4H-lock/4L-lock position. |
| | ON | — | • Within 2 seconds after ignition switch is turn ON (checking indicator operation).<br>• Transfer is at N position. |
| | Flashes at 0.25 seconds for 3 times, at intervals of 20 seconds. | Sounds at 1 second at intervals of 20 seconds. | • The transfer shift position is different for transfer switch. |
| | Flashes at intervals of 0.2 seconds continuously | — | • 4WD control module detects DTC of 4WD control system. |
| | Flashes at 0.5 seconds continuously | — | • Transfer could not complete shifting to N. |
| — | — | Sounds at 0.2 seconds for 2 times, at intervals of 3 seconds. | • Transfer is at N position. |

www.cargeek.ir

www.CarGeek.ir


## Function of 4WD Control System Component

S5JB0A3311003

| Part Name | Function |
|---|---|
| 4L/N switch | Detects transfer shift position combining center differential lock switch. |
| Center differential lock switch | Detects transfer shift position combining 4L/N switch. |
| Transfer switch | Shifts transfer shift position. |
| N indicator | Indicates transfer is at N position or not. |
| 4L indicator | Indicates transfer is at 4L-lock position or not. |
| Differential lock indicator | Indicates transfer is at 4H-lock, 4L-lock or not. |
| Transmission range sensor (N position) (for A/T model) | Detects A/T is at N range or not. |
| CPP switch | Detects clutch pedal is depressed or not. |
| Buzzer incorporated into BCM | • Indicates transfer is at “N” position.<br>• Warns of prohibited shift operation. |
| 4WD control module | • Controls transfer shifting.<br>• Diagnoses 4WD control system components.<br>• Output operation signal of indicators and buzzer to BCM. |
| Transfer shift actuator | • Consists of transfer shift actuator motor and transfer shift actuator motor position switch.<br>• Shifts transfer shift position operating High / Low shift fork and differential lock shift fork via cams.<br>• Detects transfer shift actuator motor position. |
| Diagnosis connector | Indicates DTC on indicators when grounding its diagnosis terminal. |

## 4WD Control System Operation

S5JB0A3311005

Instead of the transfer shift lever assembly, the transfer position (4H, 4H-lock, N and 4L-lock) is shifted automatically by operating the transfer switch.
The 4WD control module operates the transfer shift actuator according to the transfer switch operation.

### 4H (4WD High) Position

The driving force from the transmission is transmitted to the transfer input gear. As the center LSD case and transfer input gear are engaged via the reduction shift sleeve at this time, the driving force transmitted from the transfer input gear to the rear output shaft rotates them at the same speed.
Also, driving force from the center LSD is transmitted to the front drive shaft through front drive sprocket. Then, the front drive sprocket rotates the front output shaft via the drive chain.

www.cargeek.ir

www.CarGeek.ir

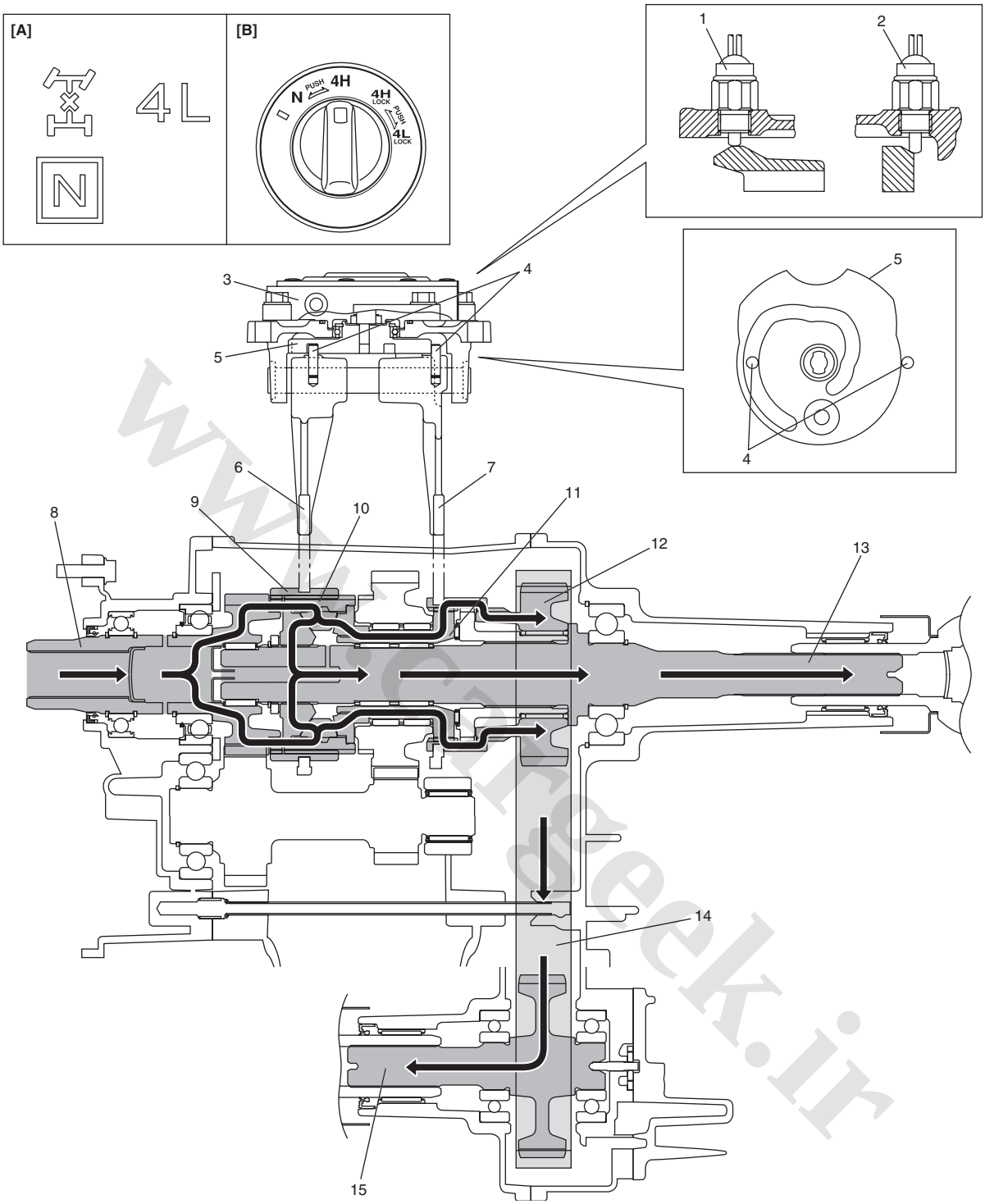


I5JB0A332003-02

| | | |
|---|---|---|
| [A]: Transfer position indicator | 5. Shift cam | 11. Front drive shaft |
| [B]: Transfer switch | 6. High / Low shift fork | 12. Front drive sprocket |
| 1. 4L/N switch | 7. Differential lock shift fork | 13. Rear output shaft |
| 2. Center differential lock switch | 8. Input gear | 14. Drive chain |
| 3. Transfer actuator | 9. Reduction shift sleeve | 15. Front output shaft |
| 4. Shift fork pin | 10. Center LSD case | |

**4H-lock (4WD High Center Differential Lock) Position**

When 4H-lock position is selected from 4H position by turning the transfer switch, the transfer shift control actuator motor runs and shift cam rotates in the arrow direction “A”. The shift cam shifts the differential lock shift fork in the arrow direction “B”, and the differential lock clutch sleeve also moves in the arrow direction “B”.

www.cargeek.ir

www.CarGeek.ir


The driving force from the transmission is transmitted from the transfer input gear to the rear output shaft, as in the case of 4H position. Also, as the front drive shaft and front drive sprocket bush are engaged via differential lock clutch sleeve, the driving force from the input gear is locked and transmitted to the rear output shaft.

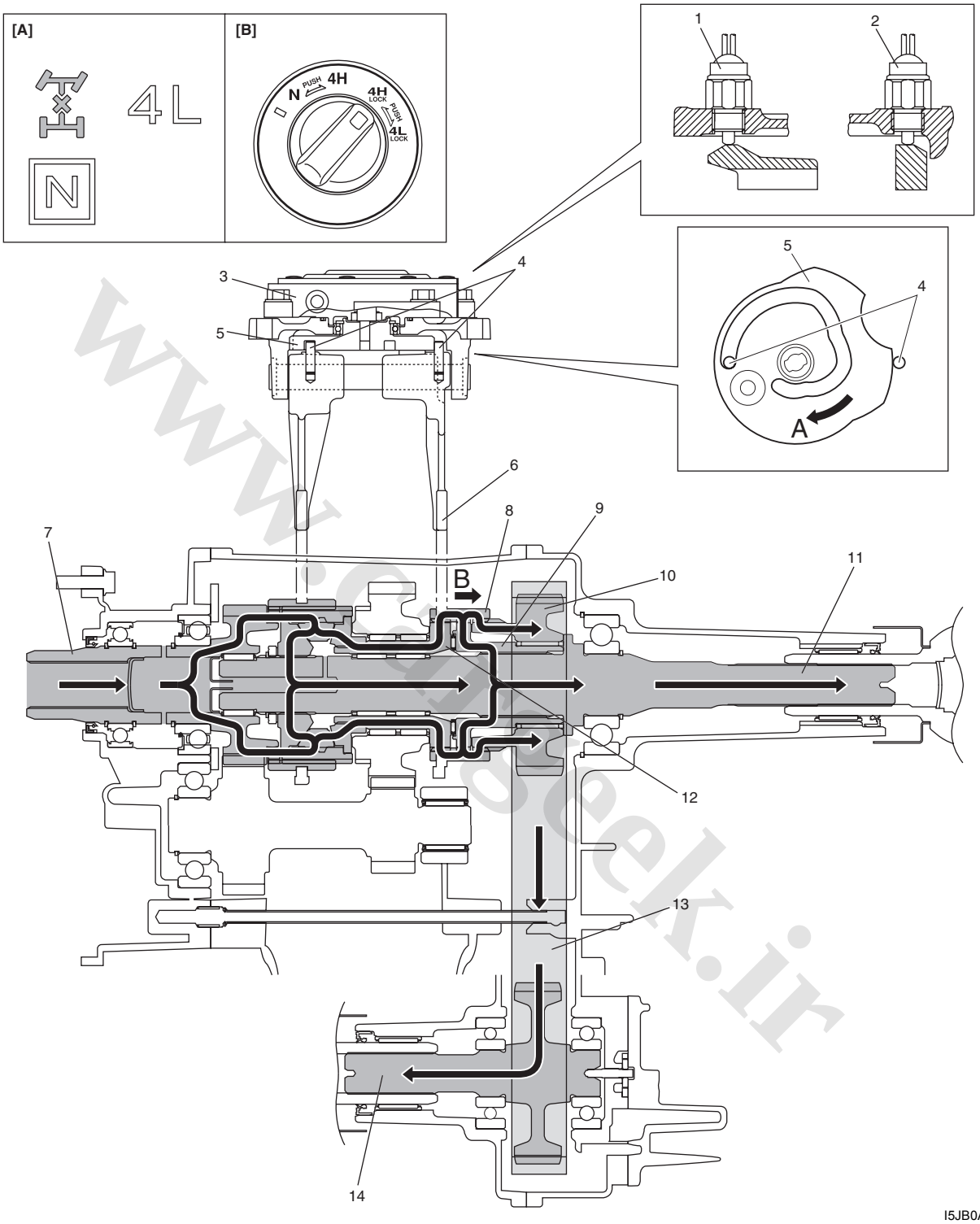


I5JB0A332004-03

| | | |
|---|---|---|
| [A]: Transfer position indicator | 5. Shift cam | 11. Rear output shaft |
| [B]: Transfer switch | 6. Differential lock shift fork | 12. Front drive shaft |
| 1. 4L/N switch | 7. Input gear | 13. Drive chain |
| 2. Center differential lock switch | 8. Differential lock clutch sleeve | 14. Front output shaft |
| 3. Transfer actuator | 9. Front drive sprocket bush | |
| 4. Shift fork pin | 10. Front drive sprocket | |

www.cargeek.ir

www.CarGeek.ir

**N (Neutral) Position**

When N position is selected from 4H position by turning the transfer switch, the transfer shift control actuator motor runs and shift cam rotates in the arrow direction “A”. The shift cam shifts the High / Low shift fork in the arrow direction “B”, and the reduction shift sleeve moves in the arrow direction “B”. Also, the shift cam shifts the differential lock shift fork in the arrow direction “C”, and the differential lock clutch sleeve also moves in the arrow direction “C”.
The driving force from the transmission is transmitted to the transfer input gear. However, as the reduction shift sleeve is not engaged with the transfer input gear and low gear, the driving force is not transmitted to the rear output shaft and front output shaft.

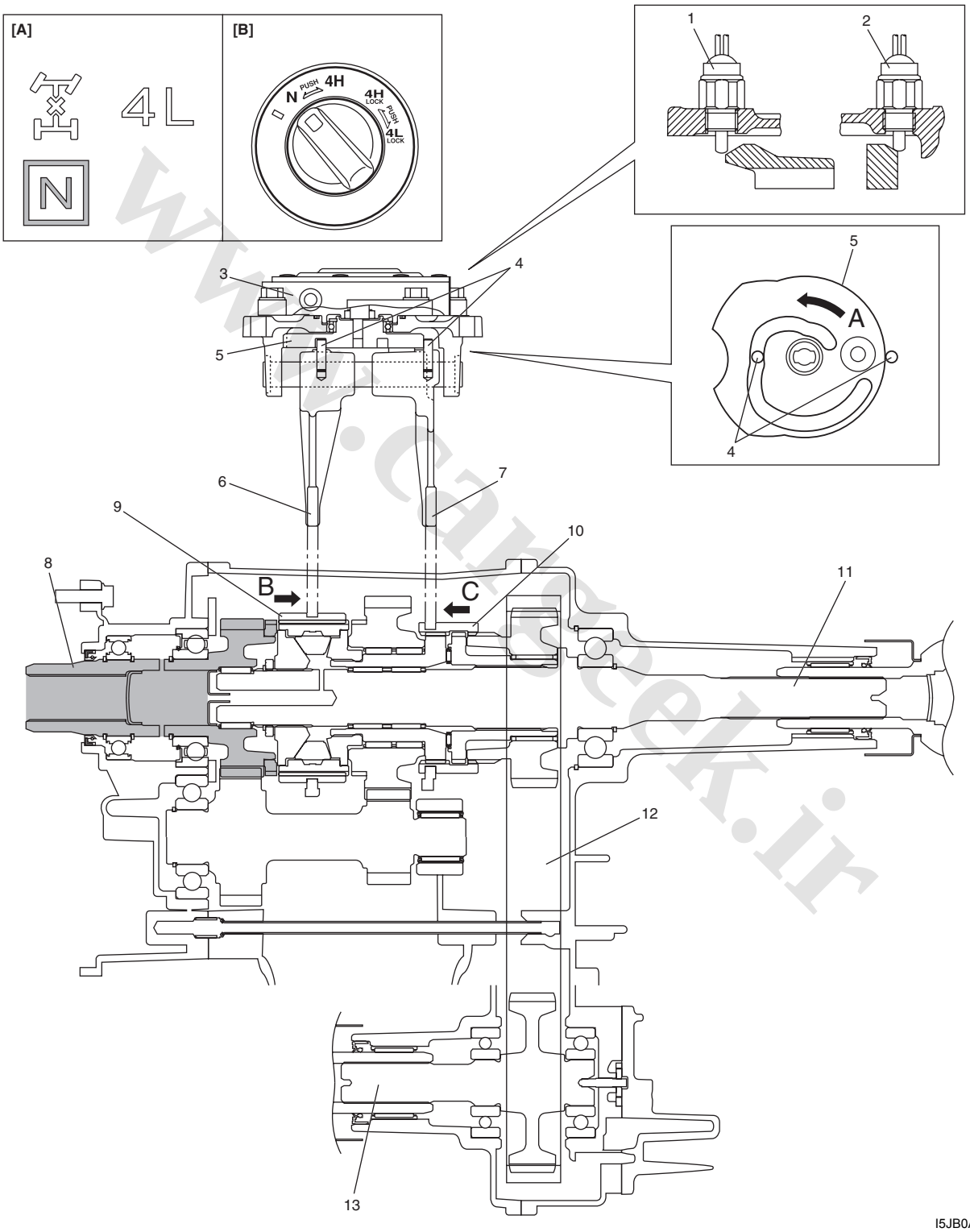


I5JB0A332005-01

www.cargeek.ir

www.CarGeek.ir


| | | |
|---|---|---|
| [A]: Transfer position indicator | 4. Shift fork pin | 9. Reduction shift sleeve |
| [B]: Transfer switch | 5. Shift cam | 10. Differential lock clutch sleeve |
| 1. 4L/N switch | 6. High / Low shift fork | 11. Rear output shaft |
| 2. Center differential lock switch | 7. Differential lock shift fork | 12. Drive chain |
| 3. Transfer actuator | 8. Input gear | 13. Front output shaft |

**4L-lock (4WD Low Center Differential Lock) Position**

When 4L-lock position is selected from 4H-lock position by turning the transfer switch, the transfer shift control actuator motor runs and shift cam rotates in the arrow direction “A”. The shift cam shifts the High/Low shift fork in the arrow direction “B”, and the reduction shift sleeve moves in the arrow direction “B”. Also, the shift cam shifts the differential lock shift fork in the arrow direction “C”, and the differential lock clutch sleeve also moves in the arrow direction “C”.

The driving force from the transmission is transmitted from the transfer low gear, through the transfer input gear and transfer counter gear with the speed reduced. At this time, as the center LSD case and transfer low gear are engaged via reduction shift sleeve, the driving force is transmitted to the rear output shaft.

The driving force of the rear output shaft makes the front output shaft rotate via the differential lock clutch sleeve as in the case of 4H-lock position.

www.cargeek.ir

www.cargeek.ir

www.CarGeek.ir

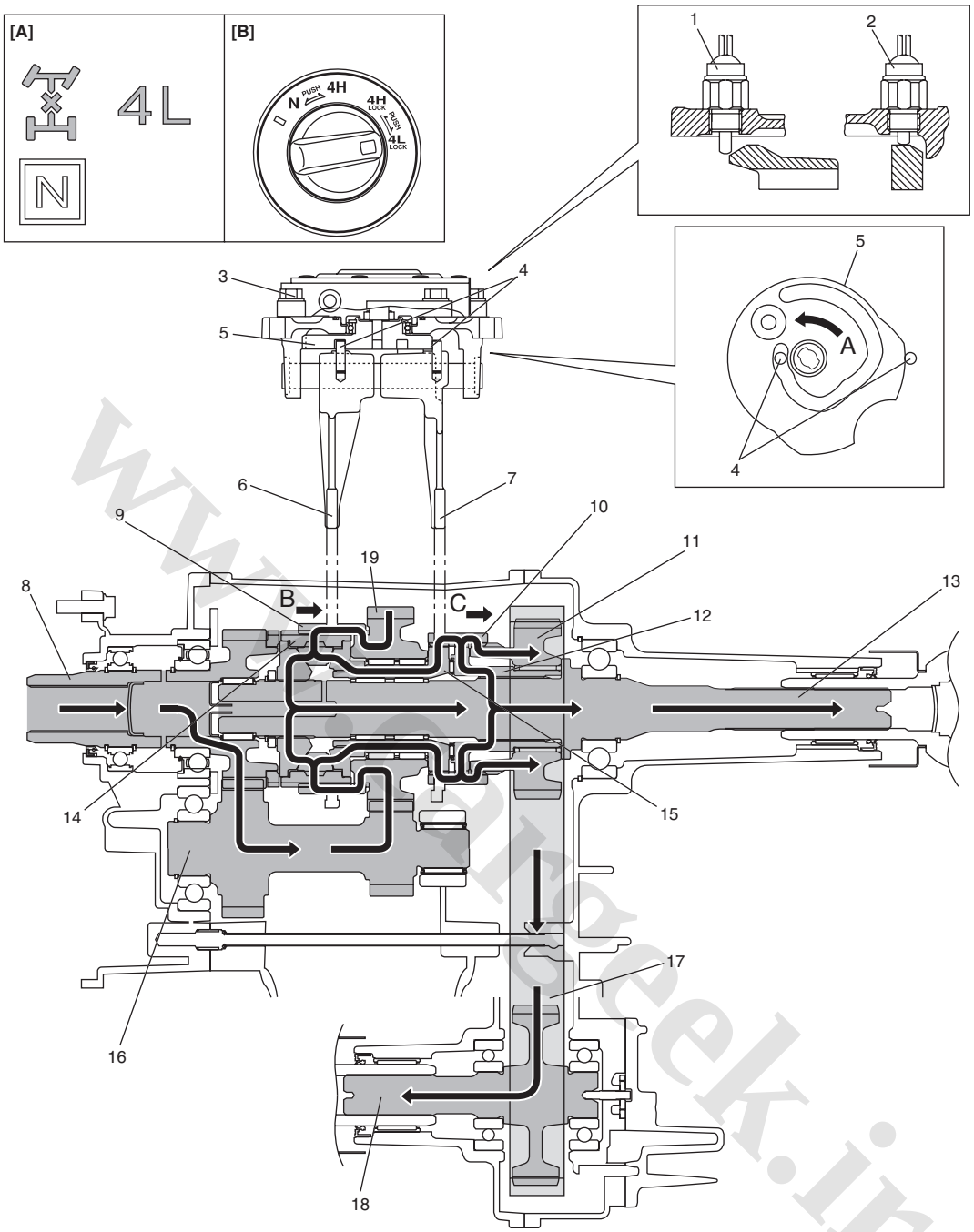


I5JB0A332006-02

| | | |
|---|---|---|
| [A]: Transfer position indicator | 6. High / Low shift fork | 13. Rear output shaft |
| [B]: Transfer switch | 7. Differential lock shift fork | 14. Center LSD case |
| 1. 4L/N switch | 8. Input gear | 15. Front drive shaft |
| 2. Center differential lock switch | 9. Reduction shift sleeve | 16. Counter gear |
| 3. Transfer actuator | 10. Differential lock clutch sleeve | 17. Drive chain |
| 4. Shift fork pin | 11. Front drive sprocket | 18. Front output shaft |
| 5. Shift cam | 12. Front drive sprocket bush | 19. Low gear |

www.cargeek.ir

www.CarGeek.ir


## 4WD Control System Wiring Circuit Diagram

S5JB0A3311006

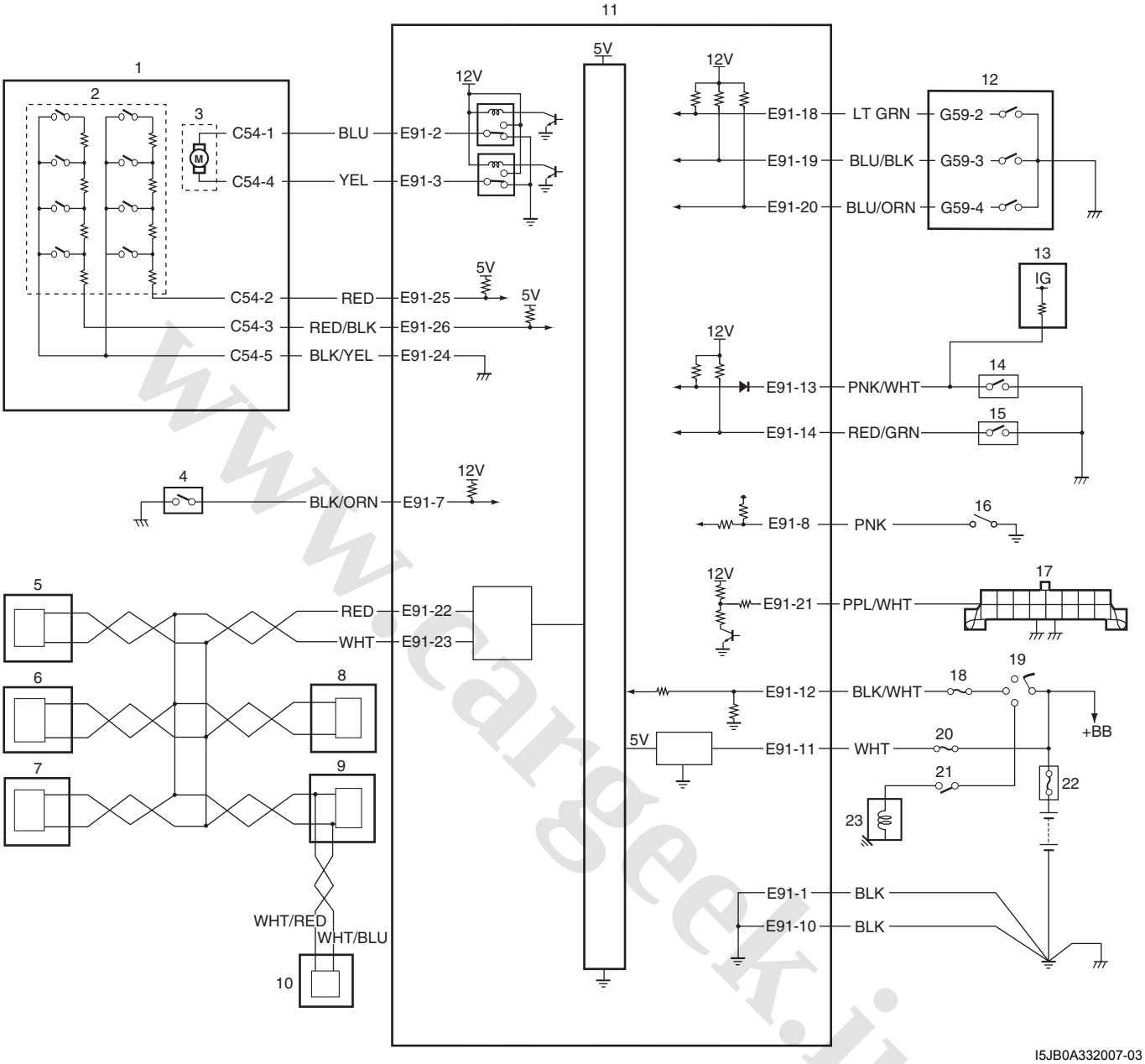


I5JB0A332007-03

| | | |
|---|---|---|
| 1. Transfer actuator | 9. ABS hydraulic unit/control module | 17. DLC |
| 2. Transfer actuator position switch | 10. ECM | 18. “IG COIL” fuse |
| 3. Transfer actuator motor | 11. 4WD control module | 19. Ignition switch |
| 4. CPP switch (for M/T model) | 12. Transfer switch | 20. “4WD” fuse |
| 5. BCM | 13. TCM (for A/T model) | 21. Shift switch (for A/T model) or CPP switch (for M/T model) |
| 6. TCM (for A/T model) | 14. 4L/N switch | 22. Main fuse box |
| 7. Combination meter | 15. Center differential lock switch | 23. Starting motor |
| 8. Keyless start control module (if equipped) | 16. Diagnosis connector (if equipped) | |

www.cargeek.ir

www.CarGeek.ir

## Terminal Arrangement of 4WD Control Module

S5JB0A3311007

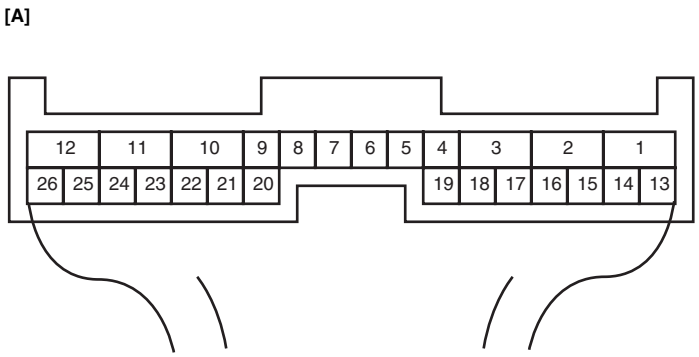


I4JA01332038-01

[A]: Connector “E91” viewed from harness side

| Terminal | Circuit | Terminal | Circuit |
|---|---|---|---|
| E91-1 | Ground | E91-18 | Transfer switch 1 |
| E91-2 | Transfer actuator motor 1 | E91-19 | Transfer switch 2 |
| E91-3 | Transfer actuator motor 2 | E91-20 | Transfer switch 3 |
| E91-7 | CPP switch | E91-21 | Data link connector (DLC) |
| E91-8 | Diagnosis connector | E91-22 | CAN communication line (High) |
| E91-10 | Ground | E91-23 | CAN communication line (Low) |
| E91-11 | Power source for internal memory | E91-24 | Transfer actuator position switch (ground) |
| E91-12 | Ignition switch | E91-25 | Transfer actuator position switch 1 (power) |
| E91-13 | 4L/N switch | E91-26 | Transfer actuator position switch 2 (power) |
| E91-14 | Center differential lock switch | | |

## Input / Output Signal Table of 4WD Control Module

S5JB0A3311008

4WD control module outputs the following signals to actuators, indicators, warning buzzer, according to the transfer switch operation.

| | | Output signal (to each component parts) | | | | |
|---|---|---|---|---|---|---|
| | | Transfer shift actuator | Differential lock indicator | 4L indicator | N indicator | Warning buzzer |
| Input signal | Transfer switch | ○ | ○ | ○ | ○ | ○ |
| | CPP switch | ○ | | ○ | ○ | ○ |
| | TCM | ○ | | ○ | ○ | ○ |
| | ABS hydraulic unit / control module | ○ | ○ | ○ | ○ | ○ |
| | 4L/N switch | | | ○ | ○ | ○ |
| | Center differential lock switch | | ○ | ○ | | |

## On-Board Diagnostic System Description

S5JB0A3311009

For 4WD control system, 4WD control module has the following functions.

- When ignition switch is turned ON with engine at stop, differential lock indicator (1), 4L indicator (2) and N indicator (3) turn on at the same time for 2 seconds in order to check operation of these indicators.
- When 4WD control module detects any malfunction in the following area, differential lock indicator (1), 4L indicator (2) and N indicator (3) flash continuously and 4WD control module comes into fail-safe mode. For details of fail safe mode, refer to “Fail-Safe Table: Motor-Shift Type (Transfer with Shift Actuator)”.
  - Transfer switch
  - Transfer shift actuator motor
  - Transfer shift actuator motor position switch
  - 4L/N switch
  - Center differential lock switch

www.cargeek.ir

www.CarGeek.ir


- DTC can be checked by either one of the following ways.
  - DTC can be checked by using SUZUKI scan tool (4) connected to DLC (5).
  - If equipped with diagnosis connector, DTC can be displayed on digital display odometer by shorting diagnosis connector (6).
- When 4WD control module detects any malfunction, 4WD control module will shift automatically transfer to either N or former position which is in before shifting process began.

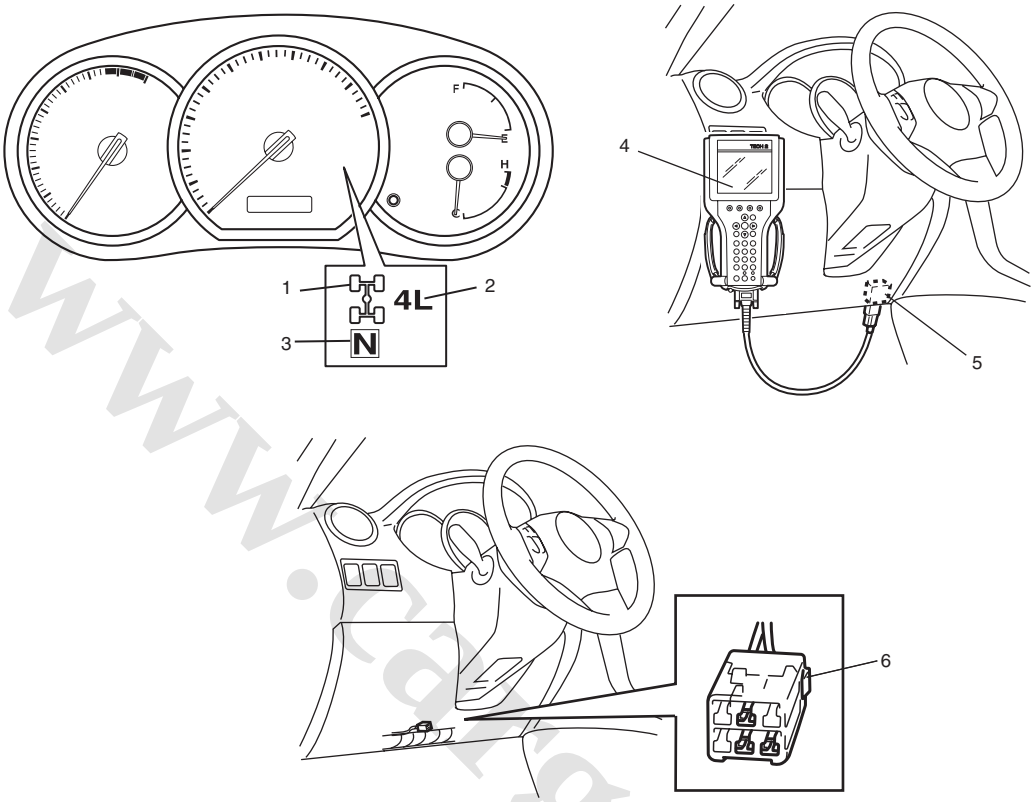


I5JB0A332008-01

**DLC (Data Link Connector)**
Refer to “Data Link Connector (DLC)” under “On-Board Diagnostic System Description: in Section 1A”.

## CAN Communication System Description

S5JB0A3311011

Refer to “CAN Communication System Description: in Section 1A”.

### 4WD Control Module Transmission Data

| | | | | BCM | Combination Meter |
|---|---|---|---|---|---|
| 4WD control module | Transmit | DATA | Buzzer on reques | ○ | |
| | | | Lock indication status | | ○ |
| | | | Low indication status | | ○ |
| | | | Neutral Indication Status | | ○ |
| | | | 4WD diagnostic trouble codes | | ○ |

I5JB0A332010-01

www.cargeek.ir

www.CarGeek.ir

### 4WD Control Module Reception Data

| | | | | ECM | TCM | ABS hydraulic unit / control module |
|---|---|---|---|---|---|---|
| 4WD control module | Receive | DATA | Engine speed | ○ | | |
| | | | Vehicle speed | ○ | | |
| | | | Brake pedal switch active | ○ | | |
| | | | Transmission gear selector position | | ○ | |
| | | | Wheel speed pulse (front right) | | | ○ |
| | | | Wheel speed pulse (front left) | | | ○ |
| | | | Wheel speed pulse (rear right) | | | ○ |
| | | | Wheel speed pulse (rear left) | | | ○ |
| | | | Antilock brake system active | | | ○ |

I5JB0A332009-01

## Diagnostic Information and Procedures

### 4WD Control System Check

S5JB0A3314001

Refer to the following items for the details of each step.

| Step | Action | Yes | No |
|---|---|---|---|
| 1 | ☞ **Customer complaint analysis**<br>1) Perform customer complaint analysis.<br>*Was customer complaint analysis performed?* | Go to Step 2. | Perform customer complaint analysis. |
| 2 | ☞ **DTC / freeze frame data check, record and clearance**<br>1) Check for DTC.<br>*Is there any DTC(s)?* | Print DTC or write them down and clear them by referring to “DTC Clearance: Motor-Shift Type (Transfer with Shift Actuator)”. Go to Step 3. | Go to Step 4. |
| 3 | ☞ **Visual inspection**<br>1) Perform visual inspection.<br>*Is there any faulty condition?* | Repair or replace malfunction part. Go to Step 11. | Go to Step 5. |
| 4 | ☞ **Visual inspection**<br>1) Perform visual inspection.<br>*Is there any faulty condition?* | Repair or replace malfunction part. Go to Step 11. | Go to Step 8. |
| 5 | ☞ **Trouble symptom confirmation**<br>1) Shift transfer to “4H”, “4H-lock”, “4L-lock” and “N” positions referring to “4WD Control System Operation Inspection: Motor-Shift Type (Transfer with Shift Actuator)”.<br>2) Confirm trouble symptom.<br>*Is trouble symptom identified?* | Go to Step 6. | Go to Step 7. |
| 6 | ☞ **Rechecking and record of DTC / freeze frame data**<br>1) Recheck for DTC referring to “DTC Check: Motor-Shift Type (Transfer with Shift Actuator)”.<br>*Is there any DTC(s)?* | Go to Step 9. | Go to Step 8. |

www.cargeek.ir

www.CarGeek.ir


| Step | Action | Yes | No |
|---|---|---|---|
| 7 | ☞ **Rechecking and record of DTC / freeze frame data**<br>1) Recheck for DTC referring to “DTC Check: Motor-Shift Type (Transfer with Shift Actuator)”.<br>*Is there any DTC(s)?* | Go to Step 9. | Go to Step 10. |
| 8 | ☞ **4WD control symptom diagnosis**<br>1) Check and repair according to “4WD Control Symptom Diagnosis: Motor-Shift Type (Transfer with Shift Actuator)”.<br>*Are check and repair complete?* | Go to Step 11. | Check and repair malfunction part(s). Go to Step 11. |
| 9 | ☞ **Troubleshooting for DTC**<br>1) Check and repair according to applicable DTC flow.<br>*Are check and repair complete?* | Go to Step 11. | Check and repair malfunction part(s). Go to Step 11. |
| 10 | ☞ **Check for intermittent problems**<br>1) Check for intermittent problems.<br>*Is there any faulty condition?* | Repair or replace malfunction part(s). Go to Step 11. | Go to Step 11. |
| 11 | ☞ **Final confirmation test**<br>1) Clear DTC if any.<br>2) Perform final confirmation test.<br>*Is there any problem symptom, DTC or abnormal condition?* | Go to Step 6. | End. |

**Detail of 4WD Control System Check**

**Step 1: Customer complaint analysis**
Record details of the problem (failure, complaint) and how it occurred as described by the customer.
For this purpose, use of such a questionnaire form as shown in the following will facilitate collecting information to the point required for proper analysis and diagnosis.

www.cargeek.ir
www.cargeek.ir

www.CarGeek.ir

**Customer questionnaire (Example)**

| Customer's name: | Model: | VIN: | |
|---|---|---|---|
| Date of issue: | Date of Reg: | Date of problem: | Mileage: |

| | |
|---|---|
| Problem Symptoms | • Transfer position indicator abnormal: fails to turn on / fails to turn off / flashes<br>• Abnormal noise while vehicle running: from transfer, from actuator, other _____<br>• No shifted to "4H" position<br>• No shifted to "4H-lock" position<br>• No shifted to "4L-lock" position<br>• No shifted to "N" position |
| Frequency of Occurrence | • Continuous / Intermittent ( times a day, a month) / other _____ |
| Conditions for Occurrence of Ploblem | • When starting: at initial start only / at every start / other _____<br>• Vehicle speed: while accelerating / while decelerating / at stop / while turning / while running at constant speed / other _____<br>• Road surface condition: Paved road / rough road / snow-covered road / other _____ |
| Environmental Condition | • Wheather: fine / cloudy / rain / snow / other<br>• Temperature: °F ( °C ) |
| Diagnostic Trouble Code | • First check: Normal code / malfunction code ( )<br>• Second check after test drive: Normal code / malfunction code ( ) |

I5JB0A332011-02

**NOTE**

**The form is a standard sample. It should be modified according to conditions characteristic of each market.**

**Step 2. DTC / freeze frame data check, record and clearance**

First, referring to "DTC Check: Motor-Shift Type (Transfer with Shift Actuator)", check DTC and pending DTC. If DTC exists, print or write down DTC and freeze frame data and then clear malfunction DTC(s) by referring to "DTC Clearance: Motor-Shift Type (Transfer with Shift Actuator)". Malfunction DTC indicates malfunction in the system but it is not possible to know from it whether the malfunction is occurring now or it occurred in the past and normal condition has been restored. In order to know that, check symptom in question according to Step 5 and then recheck DTC according to Step 6.

Diagnosing a trouble based on the DTC in this step only or failure to clear the DTC in this step may result in an faulty diagnosis, trouble diagnosis of a normal circuit or difficulty in troubleshooting which is otherwise unnecessary.

**Step 3 and 4. Visual inspection**

As a preliminary step, be sure to perform visual check of the items that support proper function of the 4WD control system referring to "Visual Inspection: Motor-Shift Type (Transfer with Shift Actuator)".

www.cargeek.ir

www.CarGeek.ir


**Step 5. Trouble symptom confirmation**
Check trouble symptoms based on information obtained in “Step 1: Customer complaint analysis: Motor-Shift Type (Transfer with Shift Actuator)” and “Step 2. DTC / freeze frame data check, record and clearance: Motor-Shift Type (Transfer with Shift Actuator)”.
Also, reconfirm DTC according to “DTC Confirmation Procedure” described in each DTC flow.

**Step 6 and 7. Rechecking and record of DTC and freeze frame data**
Refer to “DTC Check: Motor-Shift Type (Transfer with Shift Actuator)” for checking procedure.

**Step 8. 4WD control symptom diagnosis**
Check the parts of the system suspected as a possible cause referring to “4WD Control Symptom Diagnosis: Motor-Shift Type (Transfer with Shift Actuator)”.

**Step 9. Troubleshooting for DTC**
Based on the DTC indicated in Step 6 / 7 and referring to “applicable DTC flow”, locate the cause of the trouble, namely in a sensor, switch, wire harness, connector, actuator, 4WD control module or other part and repair or replace faulty parts.

**Step 10. Check for intermittent problem**
Check parts where an intermittent trouble is easy to occur (e.g. wire harness, connector, etc.), referring to “Intermittent and Poor Connection Inspection: in Section 00” and related circuit of DTC recorded in Step 2.

**Step 11. Final confirmation test**
Confirm that the problem symptom has gone and the vehicle is free from any abnormal conditions. If what has been repaired is related to the malfunction DTC, clear the DTC once and check to ensure that no malfunction DTC is indicated.

## Transfer Position Indicator Operation Check

S5JB0A3314003

1) Turn ignition switch to OFF position.
2) Check that transfer position indicators turn on for about 2 seconds and then turns off.
   If any faulty condition is found, proceed to “Transfer Position Indicator Does Not Come ON at Ignition Switch ON but Engine Stops: Motor-Shift Type (Transfer with Shift Actuator)” or “Transfer Position Indicator Remains ON Steady at Ignition Switch ON: Motor-Shift Type (Transfer with Shift Actuator)”.

## 4WD Control System Operation Inspection

S5JB0A3314038

**NOTE**

- **If it is difficult to shift between “4H” and “4H-lock” while vehicle is moving, stop vehicle and operate Transfer switch.**
- **When ABS operates while shifting from “4H” to “4H-lock” (“4H-lock” to “4H”), it becomes to disagreement of transfer switch and transfer position. End of the ABS operation, and then transfer shifting from “4H” to “4H-lock” (“4H-lock” to “4H”).**
- **Transfer position indicator blinks during shifting process.**
- **Transfer position indicator blinks and warning buzzer sounds during “N” position at intervals of 3 seconds.**
- **When shifting to “N” or “4L-lock” does not shifts, try the following procedure.**
  - **For M/T model, shift transmission to N (Neutral) position, turn ignition switch to ON position, depress clutch pedal and brake pedal while engine is running, and then try shifting again.**
  - **For A/T model, turn ignition switch to ON position, move vehicles lowly back or forth a few feet, depress brake pedal, and then try shifting again.**

1) Inspect shift operation from 4H to 4H-lock as follows.
   a) Start engine.
   b) Position front wheels straight ahead.
   c) Confirm that vehicle is under following conditions.
      - Transfer shift position is 4H.
      - Vehicle speed is less than 100 km/h (60 mph).
   d) Turn transfer switch to “4H-lock” position.
   e) Check that differential lock indicator blinks, and then comes ON steady.
2) Inspect shift operation from 4H-lock to 4L-lock as follows.
   a) Stop vehicle completely with engine running.
   b) Position front wheels straight ahead.
   c) Confirm that vehicle is under following conditions.
      - Transfer shift position is 4H-lock.
      - Transmission shift lever is at “N” position. (for A/T model)
      - Clutch pedal is depressed fully. (for M/T model)
      - Brake pedal is depressed.
   d) Push and turn transfer switch to “4L-lock” position.

www.cargeek.ir

www.CarGeek.ir

e) Check that 4L indicator blink, and then differential lock indicator and 4L indicator comes ON steady.

3) Inspect shift operation from 4L-lock to 4H-lock as follows.
   a) Stop vehicle completely with engine running.
   b) Position front wheels straight ahead.
   c) Confirm that vehicle is under following conditions.
      - Transfer shift position is 4L-lock.
      - Transmission shift lever is at “N” position. (for A/T model)
      - Clutch pedal is depressed fully. (for M/T model)
      - Brake pedal is depressed.
   d) Push and turn transfer switch to “4H-lock” position.
   e) Check that 4L indicator blink, and then differential lock indicator comes ON steady and 4L indicator not come ON.

4) Inspect shift operation from 4H-lock to 4H as follows.
   a) Start engine.
   b) Position front wheels straight ahead.
   c) Confirm that vehicle is under following conditions.
      - Transfer shift position is 4H-lock.
      - Vehicle speed is less than 100 km/h (60 mph).
   d) Turn transfer switch to “4H” position.
   e) Check that differential lock indicator blinks, and then not comes ON.

5) Inspect shift operation from 4H to N as follows.
   a) Stop vehicle completely with engine running.
   b) Position front wheels straight ahead.
   c) Confirm that vehicle is under following conditions.
      - Transfer shift position is 4H.
      - Transmission shift lever is at “N” position. (for A/T model)
      - Clutch pedal is depressed fully. (for M/T model)
      - Brake pedal is depressed.
   d) Turn transfer switch to “□” position (1), keep it there for about 10 seconds, and then turn it to “N” position after N indicator blinks.

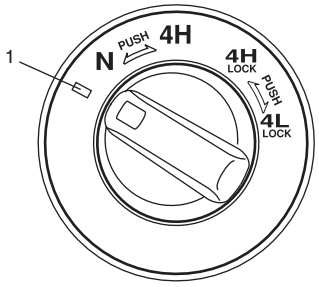

I5JB0A332002-01

   e) Check that N indicator blinks and warning buzzer sounds, and then N indicator comes ON steady.

## Visual Inspection

S5JB0A3314005

Check the following parts and systems visually.

| Inspection Item | Referring |
|---|---|
| • Front differential oil ---- level, leakage | “Front Differential Oil Change: Front in Section 3B” |
| • Rear differential oil ---- level, leakage | “Rear Differential Oil Change: Rear in Section 3B” |
| • Transfer gear oil ---- level, leakage | “Transfer Oil Change: Motor-Shift Type (Transfer with Shift Actuator)” |
| • Manual transmission oil ---- level, leakage | “Manual Transmission Oil Change: in Section 5B” |
| • A/T fluid ---- level, leakage | “A/T Fluid Level Check: in Section 5A” |
| • Transfer mounting(s) ---- wear and looseness | |
| • Fuses ---- burning | |
| • Battery ---- fluid level, corrosion of terminal | “Battery Inspection: in Section 1J” |
| • Connectors of electric wire harness ---- disconnection, friction | “Intermittent and Poor Connection Inspection: in Section 00” |
| • Other parts that can be checked visually | |

www.cargeek.ir

www.CarGeek.ir


## DTC Check

S5JB0A3314006

### Using SUZUKI Scan Tool

1) Turn ignition switch to OFF position.
2) Connect SUZUKI scan tool to data link connector (DLC) (1) located on underside of instrument panel.

   **Special tool**
   **(A): SUZUKI scan tool**

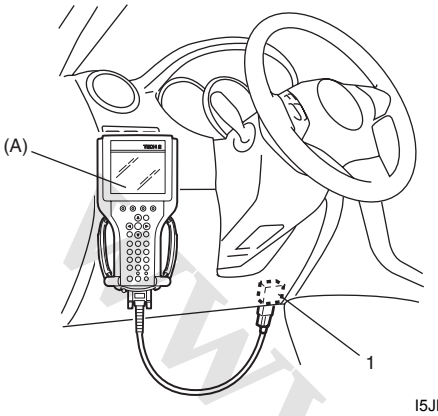


I5JB0A332012-01

3) Turn ignition switch to ON position.
4) Read DTC according to instructions displayed on SUZUKI scan tool and print it or write it down. Refer to SUZUKI scan tool operator's manual for further details.
   If communication between SUZUKI scan tool and 4WD control module is not possible, check if SUZUKI scan tool is communicable by connecting it to 4WD control module in another vehicle. If communication is possible in this case, SUZUKI scan tool is in good condition. Then check data link connector and serial data line (circuit) in the vehicle with which communication was not possible.
5) After completing the check, turn ignition switch OFF and disconnect SUZUKI scan tool from data link connector (DLC).

### Using Diagnosis Connector

1) With ignition switch OFF position, using service wire short diagnosis switch terminal (1) of diagnosis connector (2) and body ground.
2) With ignition switch ON position and leaving engine OFF, read DTC displayed on digital display odometer (3) of combination meter referring to "DTC Table: Motor-Shift Type (Transfer with Shift Actuator)".

**NOTE**

**When more than 2 DTCs are stored in memory, flashing for each DTC is repeated three times starting with the smallest DTC number in increasing order.**

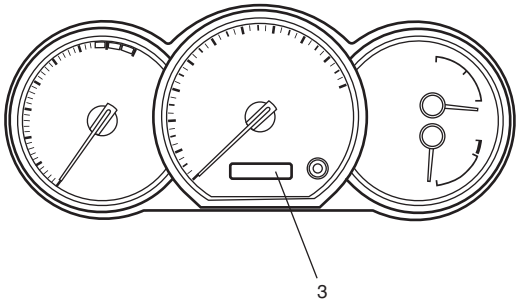


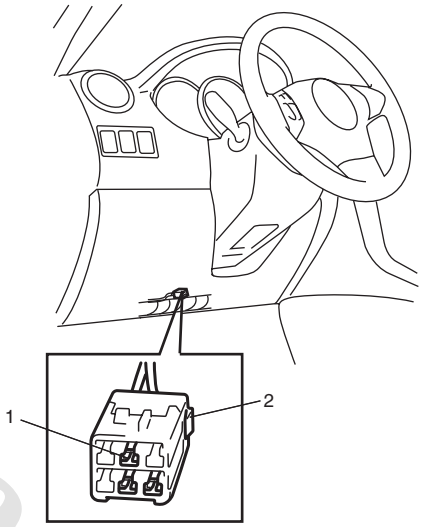


I5JB0A332013-01

3) After completing the check, turn ignition switch OFF, disconnect service wire from diagnosis connector.

www.cargeek.ir

www.CarGeek.ir

## DTC Clearance

S5JB0A3314007

### Using SUZUKI Scan Tool

1) Turn ignition switch to OFF position.
2) Connect SUZUKI scan tool to data link connector (DLC) (1) located on underside of instrument panel.

   **Special tool**
   **(A): SUZUKI scan tool**

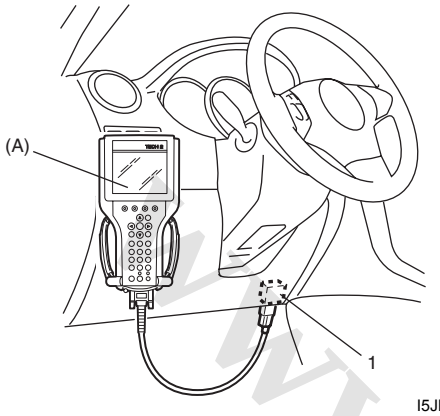


I5JB0A332012-01

3) Turn ignition switch to ON position.
4) Erase DTC according to instructions displayed on SUZUKI scan tool. Refer to SUZUKI scan tool operator's manual for further details.
5) After completing clearance, turn ignition switch OFF and disconnect SUZUKI scan tool from data link connector (DLC).
6) Perform "DTC Check: Motor-Shift Type (Transfer with Shift Actuator)" and confirm that NO CODES is displayed.

**NOTE**

**DTC and freeze frame data stored in 4WD control module memory are also cleared in the following cases. Be careful not to clear them before keeping their record.**

- **When power to 4WD control module is cut off (by disconnecting battery cable, removing fuse or disconnecting 4WD control module connectors).**
- **When the same malfunction (DTC) is not detected again during 40 engine warm-up cycles.**

### Using Diagnosis Connector

1) Turn ignition switch to ON position.
2) Using service wire short diagnosis switch terminal (1) of diagnosis connector (2) and body ground more than 5 times at about 1 second interval within 10 seconds.
3) Wait more than 9 seconds.
4) Perform "DTC Check: Motor-Shift Type (Transfer with Shift Actuator)" and confirm that DTC No. is not displayed.

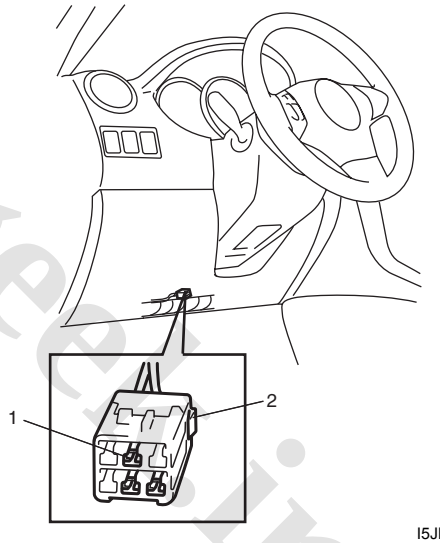


I5JB0A332014-01

## DTC Table

S5JB0A3314008

| DTC No. | Detecting item | Detecting condition (DTC will set when detecting) | Transfer position indicators |
|---|---|---|---|
| ☞ C1213 | Transfer switch circuit open | Different switch combination from specification is detected. | — |
| ☞ C1214 | Transfer switch circuit short | Different switch combination from specification is detected. | — |
| ☞ C1223 | Transfer shift actuator motor position switch 1 circuit open | Actuator position switch signal voltage 4.2 V or more. | — |
| ☞ C1224 | Transfer shift actuator motor position switch 1 circuit short | Actuator position switch signal voltage 0.6 V or less. | — |
| ☞ C1227 | 4L/N switch circuit open | Though actuator position switch is "4L-lock" position, the ON signal is not input from the 4L/N switch. | ○ |

www.cargeek.ir

www.CarGeek.ir


| DTC No. | Detecting item | Detecting condition (DTC will set when detecting) | Transfer position indicators |
|---|---|---|---|
| ☞ C1228 | 4L/N switch circuit short | Though actuator position switch is “4L-lock” position, the OFF signal is not input from the 4L/N switch. | ○ |
| ☞ C1230 | Transfer actuator circuit malfunction | Transfer switch is changed of position, and then actuator position switch is not changed for more than 3 seconds. | — |
| ☞ C1235 | Transfer shift actuator motor position switch 2 circuit open | Actuator position switch signal voltage 4.2 V or more. | — |
| ☞ C1236 | Transfer shift actuator motor position switch 2 circuit short | Actuator position switch signal voltage 0.6 V or less. | — |
| ☞ C1237 | Center differential lock switch circuit open | Though actuator position switch is “4H” position, the ON signal is not input from the center differential lock switch. | ○ |
| ☞ C1238 | Center differential lock switch circuit short | Though actuator position switch is “4L-lock” position, the OFF signal is not input from the center differential lock switch. | ○ |
| ☞ C1240 | 4WD control module power supply circuit malfunction | Battery voltage is lower than lower limit voltage for 4WD control module diagnosis. | — |
| ☞ C1243 | Internal circuit malfunction of 4WD control module | EEPROM error | — |
| ☞ C1246 | Clutch pedal position (CPP) switch circuit short | CPP switch signal is input when vehicle speed is 30 km/h (19 mph). | — |
| ☞ U1073 | Control module communication bus off | Transmitting and receiving error of 4WD control module for specified time continuously. | ○ |
| ☞ U1100 | Lost communication with ECM | Receiving error of 4WD control module from ECM for specified time continuously. | ○ |
| ☞ U1101 | Lost communication with TCM | Receiving error of 4WD control module from TCM for specified time continuously. | ○ |
| ☞ U1121 | Lost communication with ABS control module | Receiving error of 4WD control module from ABS control module for specified time continuously. | ○ |

**NOTE**

**“O” in transfer position indicator column of the above table means indicator lights up when DTC is detected.**

## Fail-Safe Table

S5JB0A3314010

This function is provided by the safe mechanism that assures safe drive ability even when the actuator, switch, sensor or its circuit fails. The following table shows the fail safe function for each fail condition of sensor, actuator, switch, 4WD control module or its circuit.

| DTC No. | Trouble Area | Fail-Safe Operation |
|---|---|---|
| ☞ C1223 | Transfer actuator switch 1 circuit open | 4WD control module stops outputting of control signal to transfer actuator (When shifting, stop it stops outputting after shifting is completed). |
| ☞ C1224 | Transfer actuator switch 1 circuit short | |
| ☞ C1235 | Transfer actuator switch 2 circuit open | |
| ☞ C1236 | Transfer actuator switch 2 circuit short | |
| ☞ C1230 | Transfer actuator circuit malfunction | 4WD control module stops outputting of control signal to transfer actuator. |
| ☞ C1240 | 4WD control module power supply circuit malfunction | |
| ☞ C1246 | Clutch switch circuit short | |

www.cargeek.ir

www.CarGeek.ir

## Scan Tool Data

S5JB0A3314009

| Scan Tool Data | Vehicle Condition | Normal Condition / Reference Value |
|---|---|---|
| Vehicle speed | At vehicle stop | 0 km/h, 0 mph |
| Engine speed | At engine idle speed | Engine idle speed is display |
| Actuator Pos Sen | Transfer shifted to 4H position | 4H |
| | Transfer being shifted between 4H-lock and 4H position | 4H-lock – 4H |
| | Transfer shifted to 4H-lock position | 4H-lock |
| | Transfer being shifted between 4H and N position | 4H – N |
| | Transfer shifted to 4L-lock position | 4L-lock |
| | Transfer being shifted between N and 4L-lock position | N – 4L-lock |
| | Transfer shifted to N position | N |
| Actuator motor Pos | Transfer shifted to 4H position | 4H |
| | Transfer shifted to 4H-lock position | 4H-lock |
| | Transfer shifted to 4L-lock position | 4L-lock |
| | Transfer shifted to N position | N |
| Battery voltage | Ignition switch ON and engine stop | 10 – 14 V |
| 4L/N switch | Transfer shifted to 4L-lock or N position | ON |
| | Transfer shifted to 4H or 4H-lock position | OFF |
| Center diff lock SW | Transfer shifted to 4H or N position | ON |
| | Transfer shifted to 4H-lock or 4L-lock position | OFF |
| N range signal (AT) | A/T shifted to “N” range | ON |
| | A/T shifted to other than “N” range | OFF |
| CPP switch (MT) | Clutch pedal depressed | OFF |
| | Clutch pedal released | ON |
| Mode switch 1 | Transfer switch selected to N position | ON |
| | Transfer switch selected to 4H, 4H-lock or 4L-lock position | OFF |
| Mode switch 2 | Transfer switch selected to 4H, 4H-lock or N position | ON |
| | Transfer switch selected to 4L-lock position | OFF |
| Mode switch 3 | Transfer switch selected to 4H-lock or 4L-lock position | ON |
| | Transfer switch selected to 4H or N position | OFF |
| Warning buzzer | Buzzer not being sound | OFF |
| | Transfer shifted to N Position | N Pos |
| | Transfer shifted to disagreement of transfer switch and transfer position | Error |
| ABS active | ABS operating | ON |
| | ABS not operating | OFF |

## Scan Tool Data Definitions

S5JB0A3314011

**Vehicle Speed (KM/H, MPH):**
This parameter indicates vehicle speed calculated by 4WD control module.

**Engine Speed (RPM):**
This parameter indicates engine revolution calculated by 4WD control module.

**Actuator Pos Sen (Transfer shift actuator motor position switch) (4H / 4H-lock / 4L-lock / N / 4H-lock-4H / 4H-N / N-4L-lock):**
This parameter indicates transfer shift actuator motor position switch status detected by 4WD control module.

**Actuator motor Pos (Transfer shift actuator motor position) (4H / 4H-lock / 4L-lock / N):**
This parameter indicates transfer shift actuator motor position detected by 4WD control module using transfer shift actuator motor position.

**Battery voltage (V):**
This parameter indicates battery voltage detected by 4WD control module.

**4L / N switch (ON / OFF):**
This parameter indicates 4L / N switch status detected by 4WD control module.

**Center diff lock Sw (ON / OFF):**
This parameter indicates center differential lock switch status detected by 4WD control module.

**N range signal (AT) (ON / OFF):**
This parameter indicates A/T shift position (“N” range or not) detected by 4WD control module.

**CPP switch (Clutch pedal position switch) (MT) (ON / OFF):**
This parameter indicates clutch pedal position switch status detected by 4WD control module using CPP switch.

**Mode switch 1 (Transfer switch) (ON / OFF):**
ON: Transfer switch to N position.
OFF: Transfer switch to other than N position.

www.cargeek.ir

www.CarGeek.ir


**Mode switch 2 (Transfer switch) (ON / OFF):**
ON: Transfer switch to other than 4L-lock position.
OFF: Transfer switch to 4L-lock position.

**Mode switch 3 (Transfer switch) (ON / OFF):**
ON: Transfer switch to 4H-lock or 4L-lock position.
OFF: Transfer switch to 4H or N position.

**Warning buzzer (OFF / N Pos / Error):**
This parameter indicates if buzzer is being commanded by 4WD control module.

**ABS active (ON / OFF):**
This parameter indicates ABS status detected by 4WD control module.

## 4WD Control Symptom Diagnosis

S5JB0A3314012

Diagnose transfer assembly after performing the following inspections.

1) Perform 4WD control system check referring to “4WD Control System Check: Motor-Shift Type (Transfer with Shift Actuator)”.
2) Confirm 4WD control system operation referring to “4WD Control System Operation: Motor-Shift Type (Transfer with Shift Actuator)”

| Condition | Possible cause | Correction / Reference Item |
|---|---|---|
| ***Transfer does not operate (Transfer position indicator does not operate)*** | Transfer switch faulty | *Check switch referring to “Transfer Switch Inspection: Motor-Shift Type (Transfer with Shift Actuator)”.* |
| | Transfer shift actuator faulty | *Check transfer shift actuator referring to “Transfer Assembly Inspection: Motor-Shift Type (Transfer with Shift Actuator)”.* |
| | 4L/N switch and/or switch center differential lock switch faulty | *Check switch referring to “Transfer Assembly Inspection: Motor-Shift Type (Transfer with Shift Actuator)”.* |
| | Transmission range sensor (“N” range) faulty (for A/T model) | *Adjust or check transmission range sensor referring to “Transmission Range Sensor Inspection and Adjustment: in Section 5A”.* |
| | CPP switch faulty (for M/T model) | *Check CPP switch referring to “Clutch Pedal Position (CPP) Switch Inspection and Adjustment: in Section 5C”.* |
| | Wiring or grounding faulty | *Repair as necessary.* |
| | 4WD control module faulty | *Check 4WD control module referring to “Inspection of 4WD Control Module and Its Circuits: Motor-Shift Type (Transfer with Shift Actuator)”.* |
| ***Transfer refuses to operate (Transfer position indicator flashes, and then transfer does not shift)*** | Transfer shift actuator faulty | *Check transfer shift actuator referring to “Transfer Assembly Inspection: Motor-Shift Type (Transfer with Shift Actuator)”.* |
| | 4L/N switch and/or center differential lock switch faulty | *Check switch referring to “Transfer Assembly Inspection: Motor-Shift Type (Transfer with Shift Actuator)”.* |
| | Distorted control cover shift shaft or shift fork | *Check shift fork referring to “Transfer Assembly Inspection: Motor-Shift Type (Transfer with Shift Actuator)”.* |
| | Weakened control cover shift shaft spring | *Check spring referring to “Transfer Assembly Inspection: Motor-Shift Type (Transfer with Shift Actuator)”.* |
| | Distorted or dispositioned control cover shift shaft snap ring and washer | *Check snap ring and washer referring to “Transfer Assembly Inspection: Motor-Shift Type (Transfer with Shift Actuator)”.* |
| | Worn chamfered tooth on sleeve or gear | *Check chamfered tooth and gear referring to “Transfer Assembly Inspection: Motor-Shift Type (Transfer with Shift Actuator)”.* |
| | Wiring or grounding faulty | *Repair as necessary.* |
| | 4WD control module faulty | *Check 4WD control module referring to “Inspection of 4WD Control Module and Its Circuits: Motor-Shift Type (Transfer with Shift Actuator)”.* |

www.cargeek.ir

www.CarGeek.ir

| Condition | Possible cause | Correction / Reference Item |
|---|---|---|
| ***Gear slipping out of mesh*** | Worn control cover shift shaft | *Check control cover shift shaft referring to "Transfer Assembly Inspection: Motor-Shift Type (Transfer with Shift Actuator)".* |
| | Worn shift fork or sleeve | *Check shift fork or sleeve referring to "Transfer Assembly Inspection: Motor-Shift Type (Transfer with Shift Actuator)".* |
| | Weak or damaged control cover shift shaft spring | *Check spring referring to "Transfer Assembly Inspection: Motor-Shift Type (Transfer with Shift Actuator)".* |
| | Worn bearings on input gear or counter gear | *Check bearing referring to "Transfer Assembly Inspection: Motor-Shift Type (Transfer with Shift Actuator)".* |
| | Worn chamfered tooth on sleeve or gear | *Check sleeve and gear referring to "Transfer Assembly Inspection: Motor-Shift Type (Transfer with Shift Actuator)".* |
| | Missing or disengagement of circlip(s) | *Check circlip(s) referring to "Transfer Assembly Inspection: Motor-Shift Type (Transfer with Shift Actuator)".* |
| ***Noise*** | Damaged or worn bearing(s) | *Refer to "Transfer Assembly Inspection: Motor-Shift Type (Transfer with Shift Actuator)".* |
| | Damaged or worn gear(s) | *Refer to "Transfer Assembly Inspection: Motor-Shift Type (Transfer with Shift Actuator)".* |
| | Damaged or worn chamfered tooth on sleeve or gear | *Refer to "Transfer Assembly Inspection: Motor-Shift Type (Transfer with Shift Actuator)".* |

## Transfer Position Indicator Does Not Come ON at Ignition Switch ON but Engine Stops

S5JB0A3314039

### Wiring Diagram

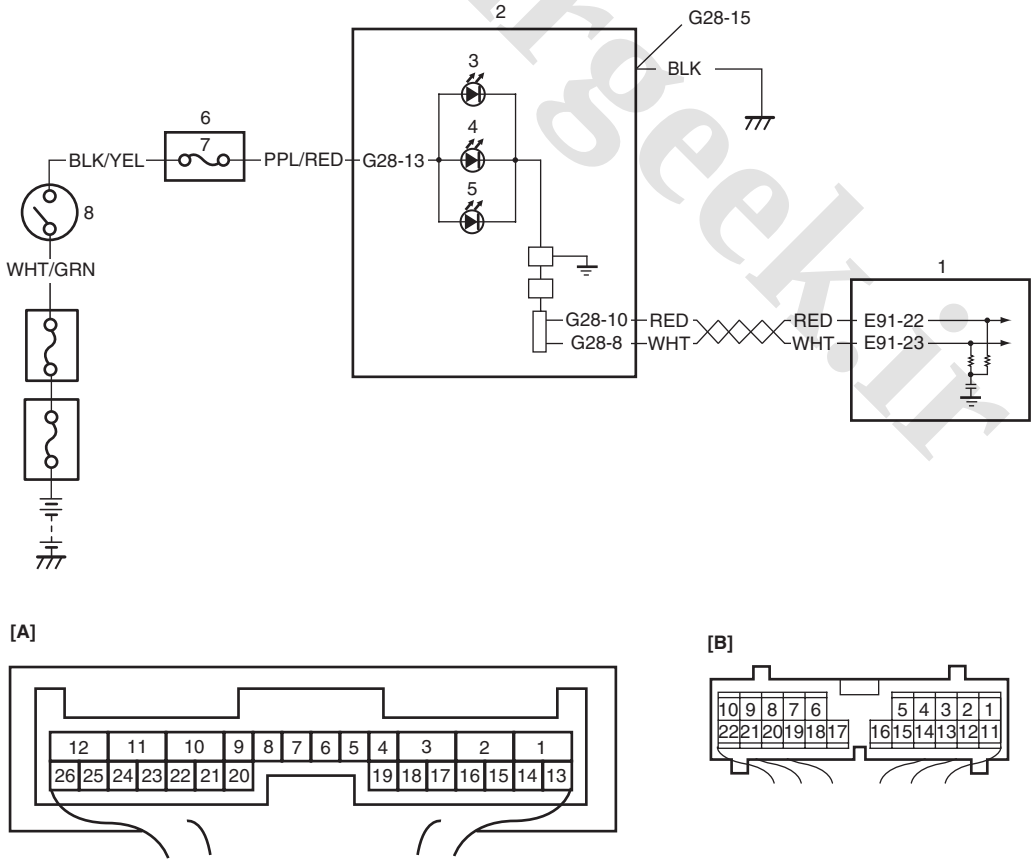


I5JB0A332015-03

www.cargeek.ir

www.CarGeek.ir


| | |
|---|---|
| [A]: 4WD control module connector “E91” (viewed from harness side) | 4. 4L indicator |
| [B]: Combination meter connector (viewed from harness side) | 5. N indicator |
| 1. 4WD control module | 6. Junction block assembly |
| 2. Combination meter | 7. “METER” fuse |
| 3. Differential lock indicator | 8. Ignition switch |

**Circuit Description**

Transfer position indicator operates according to the signal from 4WD control module. If the transfer control system is in good condition, transfer position indicator light up for 2 seconds when ignition switch is turned to ON position, and then turned to OFF position. If an abnormality is detected in the system, transfer position indicator remains lighting.

**Troubleshooting**

| Step | Action | Yes | No |
|---|---|---|---|
| 1 | **Transfer position indicator power supply check**<br>1) Turn ignition switch to ON position.<br>*Do other indicators come ON?* | Go to Step 2. | Go to Step 3. |
| 2 | **Check DTC**<br>1) Connect scan tool to DLC with ignition switch OFF.<br>2) Turn ignition switch to ON position and check DTC.<br>*Is there DTC(s) U1073, U1100, U1101 and/or U1121?* | Go to applicable DTC diag. flow. | Substitute a known-good combination meter and recheck. If transfer position indicator still remains off, substitute a known-good 4WD control module and recheck. |
| 3 | **CAN communication circuit check**<br>1) Check CAN communication circuit between combination meter and 4WD control module referring to “DTC U1073: Control Module Communication Buss Off: Motor-Shift Type (Transfer with Shift Actuator)”.<br>*Is CAN communication circuit in good condition?* | Go to Step 4. | Repair or replace. |
| 4 | **“METER” fuse check**<br>1) Turn ignition switch to OFF position.<br>2) Check for fuse blown to “METER” fuse in junction block assembly.<br>*Is “METER” fuse in good condition?* | Go to Step 5. | Replace “METER” fuse and check for short. |
| 5 | **Combination meter power supply check**<br>1) Remove combination meter referring to “Combination Meter Removal and Installation: in Section 9C”.<br>2) Check proper connection to combination meter connector at “G28-13” and “G28-15” terminals.<br>3) If OK, then turn ignition switch to ON position and measure voltage between combination meter connector at “G28-13” terminal and vehicle body ground.<br>*Is it 10 – 14 V?* | Go to Step 6. | “PPL/RED” wire is open circuit. |
| 6 | **Combination meter ground circuit check**<br>1) Turn ignition switch to OFF position.<br>2) Measure resistance between combination meter connector at “G28-15” terminal and vehicle body ground.<br>*Is resistance 1 Ω or less?* | Substitute a known-good combination meter and recheck. If transfer position indicator still remains OFF, substitute a known-good 4WD control module and recheck. | “BLK” wire is open or high resistance circuit. |

www.cargeek.ir

www.CarGeek.ir

## Transfer Position Indicator Remains ON Steady at Ignition Switch ON

S5JB0A3314040

### Wiring Diagram

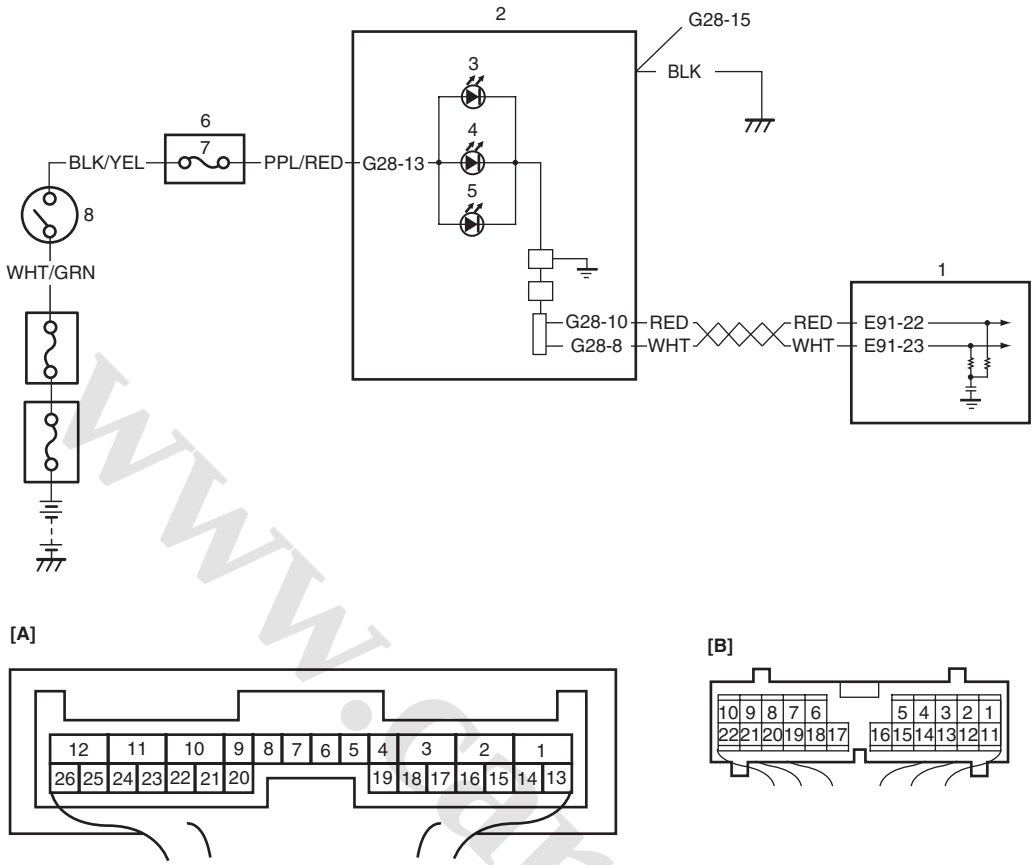


I5JB0A332015-03

| | |
|---|---|
| [A]: 4WD control module connector “E91” (viewed from harness side) | 4. 4L indicator |
| [B]: Combination meter connector (viewed from harness side) | 5. N indicator |
| 1. 4WD control module | 6. Junction block assembly |
| 2. Combination meter | 7. “METER” fuse |
| 3. Differential lock indicator | 8. Ignition switch |

### Circuit Description

Transfer position indicator operates according to the signal from 4WD control module. If the transfer control system is in good condition, transfer position indicator light up for 2 seconds when ignition switch is turned to ON position, and then turned to OFF position. If an abnormality is detected in the system, transfer position indicator remains lighting.

### Troubleshooting

| Step | Action | Yes | No |
|---|---|---|---|
| 1 | **Check DTC**<br>1) Check DTC referring to “DTC Check: Motor-Shift Type (Transfer with Shift Actuator)”.<br>*Is there any DTC(s)?* | Perform DTC flow to repair and retry. | Go to Step 2. |
| 2 | **CAN communication circuit check**<br>1) Check CAN communication circuit between combination meter and 4WD control module referring to “DTC U1073: Control Module Communication Buss Off: Motor-Shift Type (Transfer with Shift Actuator)”.<br>*Is CAN communication circuit in good condition?* | Substitute a known-good combination meter and recheck. If transfer position indicator still remains off, substitute a known-good 4WD control module and recheck. | Repair or replace. |

www.cargeek.ir

www.CarGeek.ir


## DTC C1213: Transfer Switch Circuit Open

S5JB0A3314041

### Wiring Diagram

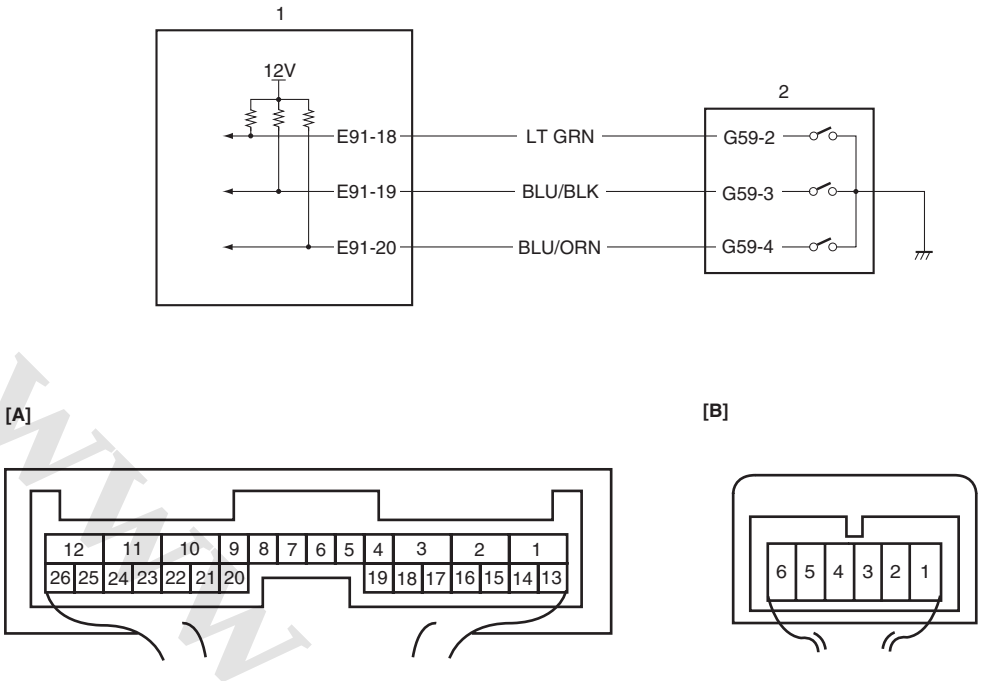


I5JB0A332016-01

| | |
|---|---|
| [A]: 4WD control module connector “E91” (viewed from harness side) | 1. 4WD control module |
| [B]: Transfer switch connector “G59” (viewed from harness side) | 2. Transfer switch |

### DTC Detecting Condition and Trouble Area

| DTC detecting condition | Trouble area |
|---|---|
| Transfer switch combination different from specification is detected for more than 0.5 seconds. | • Transfer switch<br>• Transfer switch circuit<br>• 4WD control module |

### DTC Confirmation Procedure

1) Clear DTC using scan tool.
2) Select transfer switch to “4H” position and keep its position for 10 seconds. Similarly select transfer switch to “4H-lock”, “N” and “4L-lock” position.
3) Check DTC.

### Troubleshooting

| Step | Action | Yes | No |
|---|---|---|---|
| 1 | *Was “4WD control system check” performed?* | Go to Step 2. | Go to “4WD Control System Check: Motor-Shift Type (Transfer with Shift Actuator)”. |
| 2 | **Transfer switch circuit check**<br>1) Disconnect transfer switch connector “G59” with ignition switch OFF.<br>2) Check for proper connection to “G59-2”, “G59-3” and “G59-4” terminals of transfer switch connector.<br>3) If connection is OK, measure voltage between “G59-2”, “G59-3” or “G59-4” terminal of transfer switch connector and vehicle body ground with ignition switch ON.<br>*Is it 10 – 14 V?* | Go to Step 3. | Go to Step 4. |

www.cargeek.ir

www.CarGeek.ir

| Step | Action | Yes | No |
|---|---|---|---|
| 3 | **Transfer switch check**<br>1) Check transfer switch referring to “Transfer Switch Inspection: Motor-Shift Type (Transfer with Shift Actuator)”.<br>*Is switch in good condition?* | Substitute a known-good 4WD control module and recheck. | Replace transfer switch. |
| 4 | **Wire harness check**<br>1) Disconnect connector from 4WD control module connector “E91” with ignition switch OFF.<br>2) Check for open and high resistance in related circuits.<br>• Between “G59-2” terminal of transfer switch connector and “E91-18” terminal of 4WD control module connector<br>• Between “G59-3” terminal of transfer switch connector and “E91-19” terminal of 4WD control module connector<br>• Between “G59-4” terminal of transfer switch connector and “E91-20” terminal of 4WD control module connector<br>*Are they in good condition?* | Substitute a known-good 4WD control module and recheck. | Repair circuit. |

## DTC C1214: Transfer Switch Circuit Short

S5JB0A3314042

### Wiring Diagram

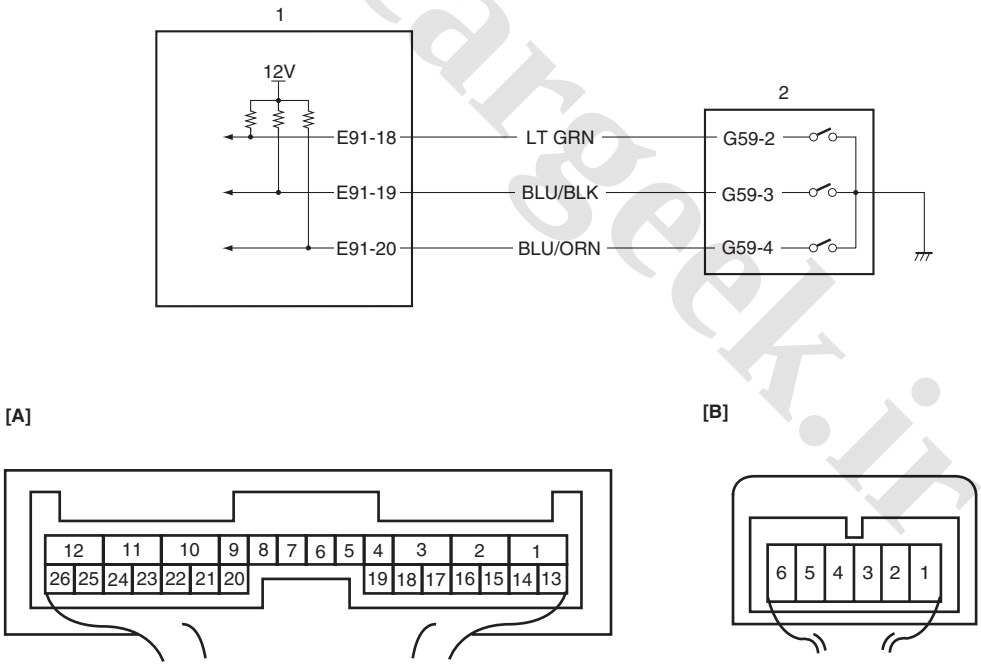


I5JB0A332016-01

| | |
|---|---|
| [A]: 4WD control module connector “E91” (viewed from harness side) | 1. 4WD control module |
| [B]: Transfer switch connector “G59” (viewed from harness side) | 2. Transfer switch |

### DTC Detecting Condition and Trouble Area

| DTC detecting condition | Trouble area |
|---|---|
| Transfer switch combination different from specification is detected for more than 0.5 seconds. | • Transfer switch<br>• Transfer switch circuit<br>• 4WD control module |

www.cargeek.ir

www.CarGeek.ir


**DTC Confirmation Procedure**

1) Clear DTC using scan tool.
2) Select transfer switch to “4H” position and keep its position for 10 seconds. Similarly select transfer switch to “4H-lock”, “N” and “4L-lock” position.
3) Check DTC.

**Troubleshooting**

| Step | Action | Yes | No |
|---|---|---|---|
| 1 | *Was “4WD control system check” performed?* | Go to Step 2. | Go to “4WD Control System Check: Motor-Shift Type (Transfer with Shift Actuator)”. |
| 2 | **Transfer switch circuit check**<br>1) Disconnect transfer switch connector “G59” with ignition switch OFF.<br>2) Check for proper connection to “G59-2”, “G59-3” and “G59-4” terminals of transfer switch connector.<br>3) If connection is OK, measure voltage between “G59-2”, “G59-3” or “G59-4” terminal of transfer switch connector and vehicle body ground with ignition switch ON.<br>*Is it 10 – 14 V?* | Go to Step 3. | Go to Step 4. |
| 3 | **Transfer switch check**<br>1) Check transfer switch referring to “Transfer Switch Inspection: Motor-Shift Type (Transfer with Shift Actuator)”.<br>*Is switch in good condition?* | Substitute a known-good 4WD control module and recheck. | Replace transfer switch. |
| 4 | **Wire harness check**<br>1) Disconnect connector from 4WD control module connector “E91” with ignition switch OFF.<br>2) Check for shorted to ground in related circuits.<br>• Between “G59-2” terminal of transfer switch connector and “E91-18” terminal of 4WD control module connector<br>• Between “G59-3” terminal of transfer switch connector and “E91-19” terminal of 4WD control module connector<br>• Between “G59-4” terminal of transfer switch connector and “E91-20” terminal of 4WD control module connector<br>*Are they in good condition?* | Substitute a known-good 4WD control module and recheck. | Repair circuit. |

www.cargeek.ir

www.CarGeek.ir

## DTC C1223 / C1235: Transfer Shift Actuator Motor Position Switch 1 Circuit Open / Transfer Shift Actuator Motor Position Switch 2 Circuit Open

S5JB0A3314043

### Wiring Diagram

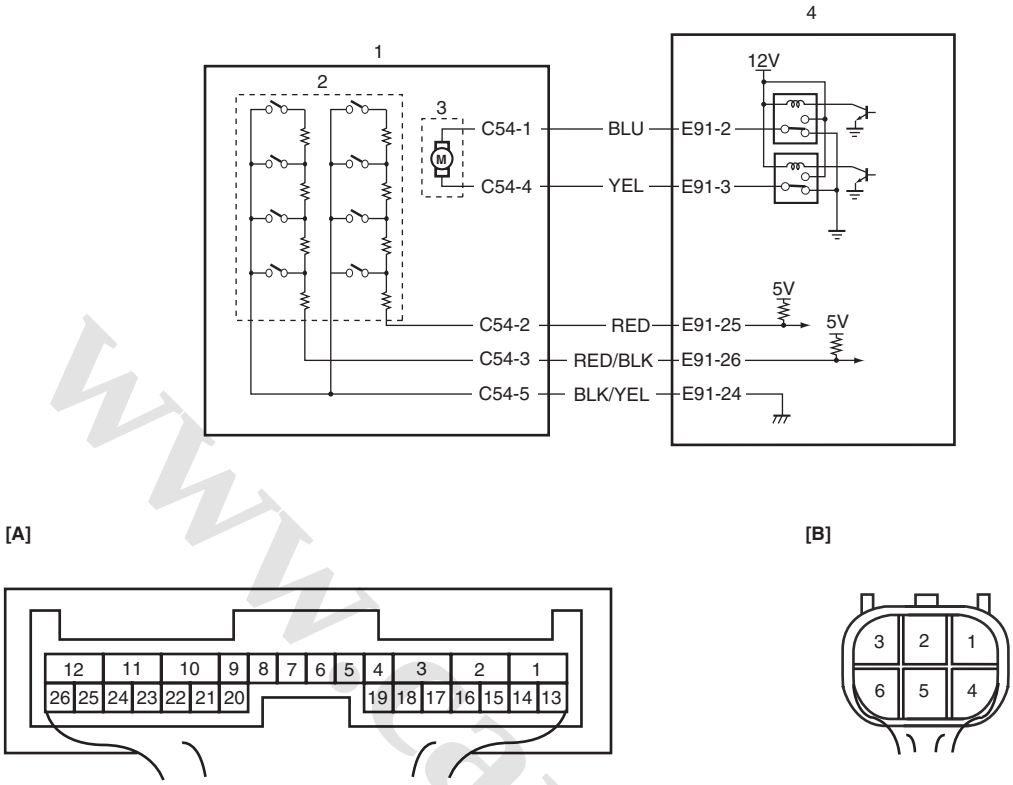


I5JB0A332017-01

| | |
|---|---|
| [A]: 4WD control module connector “E91” (viewed from harness side) | 2. Transfer shift actuator motor position switch |
| [B]: Transfer shift actuator connector “C54” (engine harness side) (viewed from harness side) | 3. Transfer shift actuator motor |
| 1. Transfer shift actuator | 4. 4WD control module |

### DTC Detecting Condition and Trouble Area

| DTC detecting condition | Trouble area |
|---|---|
| Transfer shift actuator motor position switch signal voltage 4.2 V or more. | • Transfer shift actuator motor position switch<br>• Transfer shift actuator motor position switch circuit<br>• 4WD control module |

### DTC Confirmation Procedure

1) Clear DTC using scan tool.
2) Select transfer switch to “4H” position and keep its position for 10 seconds. Similarly select transfer switch to “4H-lock”, “N” and “4L-lock” position.
3) Check DTC.

www.cargeek.ir

www.CarGeek.ir


**Troubleshooting**

| Step | Action | Yes | No |
|---|---|---|---|
| 1 | *Was "4WD control system check" performed?* | Go to Step 2. | Go to "4WD Control System Check: Motor-Shift Type (Transfer with Shift Actuator)". |
| 2 | **Transfer shift actuator motor position switch circuit check**<br>1) Disconnect transfer shift actuator connector "C54" with ignition switch OFF.<br>2) Check for proper connection to "C54-2", "C54-3" and "C54-5" terminals of transfer shift actuator connector.<br>3) If connection is OK, measure voltage between "G54-2", "G54-3" or "G54-5" terminal of transfer switch connector and vehicle body ground with ignition switch ON.<br>*Is it approx. 5 V?* | Go to Step 3. | Go to Step 4. |
| 3 | **Transfer shift actuator position switch check**<br>1) Check transfer shift actuator position switch referring to "Transfer Assembly Inspection: Motor-Shift Type (Transfer with Shift Actuator)".<br>*Is actuator in good condition?* | Substitute a known-good 4WD control module and recheck. | Faulty actuator position switch. Replace transfer shift actuator. |
| 4 | **Wire harness check**<br>1) Disconnect connector from 4WD control module connector "E91" with ignition switch OFF.<br>2) Check for open and high resistance in related circuits.<br>• Between "C54-2" terminal of transfer shift actuator connector and "E91-25" terminal of 4WD control module connector<br>• Between "C54-3" terminal of transfer shift actuator connector and "E91-26" terminal of 4WD control module connector<br>• Between "C54-5" terminal of transfer shift actuator connector and "E91-24" terminal of 4WD control module connector<br>*Are they it in good condition?* | Substitute a known-good 4WD control module and recheck. | Repair circuit. |

www.cargeek.ir

www.CarGeek.ir

## DTC C1224 / C1236: Transfer Shift Actuator Motor Position Switch 1 Circuit Short / Transfer Shift Actuator Motor Position Switch 2 Circuit Short

S5JB0A3314044

### Wiring Diagram

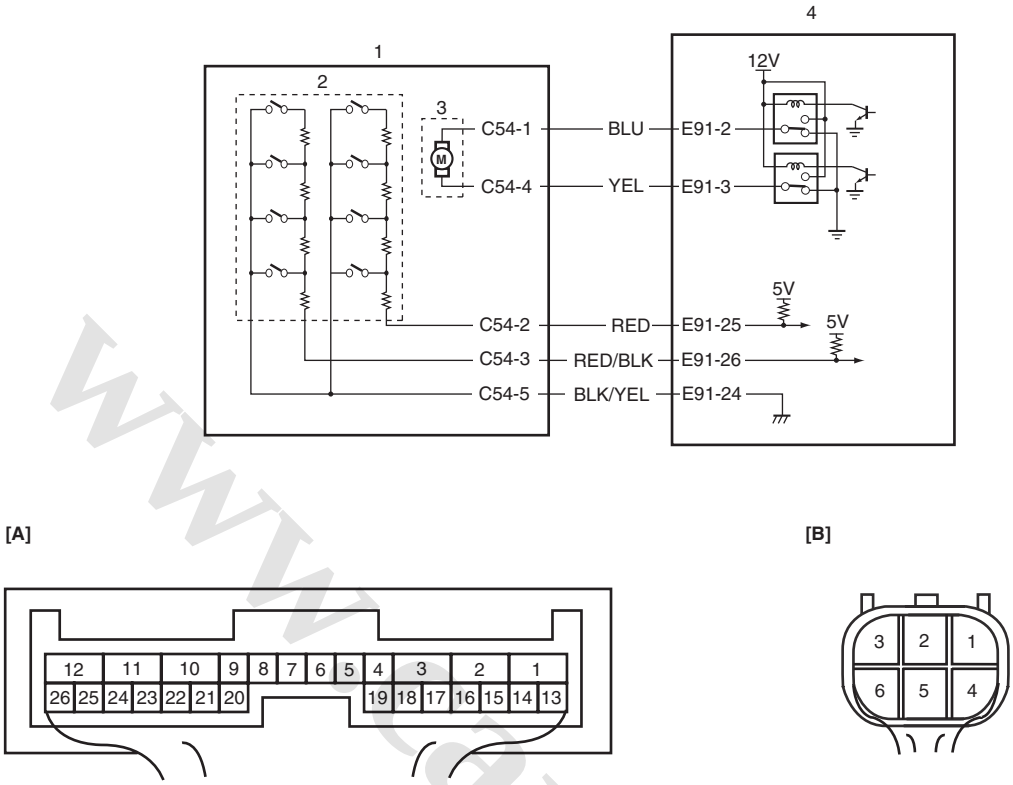


I5JB0A332017-01

| | |
|---|---|
| [A]: 4WD control module connector “E91” (viewed from harness side) | 2. Transfer shift actuator motor position switch |
| [B]: Transfer shift actuator connector “C54” (engine harness side) (viewed from harness side) | 3. Transfer shift actuator motor |
| 1. Transfer shift actuator | 4. 4WD control module |

### DTC Detecting Condition and Trouble Area

| DTC detecting condition | Trouble area |
|---|---|
| Transfer shift actuator motor position switch signal voltage 0.6 V or less. | • Transfer shift actuator motor position switch<br>• Transfer shift actuator motor position switch circuit<br>• 4WD control module |

### DTC Confirmation Procedure

1) Clear DTC using scan tool.
2) Select transfer switch to “4H” position and keep its position for 10 seconds. Similarly select transfer switch to “4H-lock”, “N” and “4L-lock” position.
3) Check DTC.

www.cargeek.ir

www.CarGeek.ir


**Troubleshooting**

| Step | Action | Yes | No |
|---|---|---|---|
| 1 | *Was "4WD control system check" performed?* | Go to Step 2. | Go to "4WD Control System Check: Motor-Shift Type (Transfer with Shift Actuator)". |
| 2 | **Transfer shift actuator motor position switch circuit check**<br>1) Disconnect transfer shift actuator connector "C54" with ignition switch OFF.<br>2) Check for proper connection to "C54-2", "C54-3" and "C54-5" terminals of transfer shift actuator connector.<br>3) If connection is OK, measure voltage between "G54-2", "G54-3" or "G54-5" terminal of transfer switch connector and vehicle body ground with ignition switch ON.<br>*Is it approx. 5 V?* | Go to Step 3. | Go to Step 4. |
| 3 | **Transfer shift actuator position switch check**<br>1) Check transfer shift actuator position switch referring to "Transfer Assembly Inspection: Motor-Shift Type (Transfer with Shift Actuator)".<br>*Is actuator in good condition?* | Substitute a known-good 4WD control module and recheck. | Faulty actuator position switch. Replace transfer shift actuator. |
| 4 | **Wire harness check**<br>1) Disconnect connector from 4WD control module connector "E91" with ignition switch OFF.<br>2) Check for shorted to ground in related circuits.<br>• Between "C54-2" terminal of transfer shift actuator connector and "E91-25" terminal of 4WD control module connector<br>• Between "C54-3" terminal of transfer shift actuator connector and "E91-26" terminal of 4WD control module connector<br>• Between "C54-5" terminal of transfer shift actuator connector and "E91-24" terminal of 4WD control module connector<br>*Are they in good condition?* | Substitute a known-good 4WD control module and recheck. | Repair circuit. |

www.cargeek.ir

www.CarGeek.ir

## DTC C1227: 4L/N Switch Circuit Open

S5JB0A3314045

### Wiring Diagram

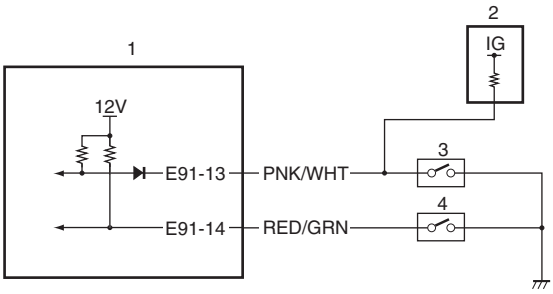


[A]

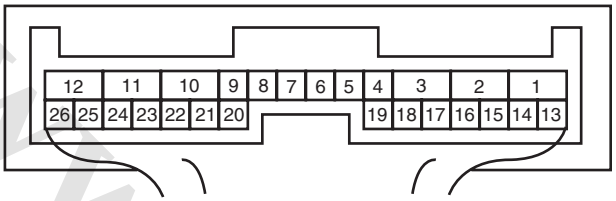


I5JB0A332018-01

| | |
|---|---|
| [A]: 4WD control module connector “E91” (viewed from harness side) | 3. 4L/N switch |
| 1. 4WD control module | 4. Center differential lock switch |
| 2. TCM | |

### DTC Detecting Condition and Trouble Area

| DTC detecting condition | Trouble area |
|---|---|
| Though transfer shift actuator motor position switch is “4L-lock” position, the ON signal is not input from the 4L/N switch. | • 4L/N switch<br>• 4L/N switch circuit<br>• 4WD control module |

### DTC Confirmation Procedure

1) Clear DTC using scan tool.
2) Select transfer switch to “4L-lock” position and keep its position for 1 min.
3) Check DTC.

### Troubleshooting

| Step | Action | Yes | No |
|---|---|---|---|
| 1 | *Was “4WD control system check” performed?* | Go to Step 2. | Go to “4WD Control System Check: Motor-Shift Type (Transfer with Shift Actuator)”. |
| 2 | **4L/N switch circuit check**<br>1) Disconnect 4L/N switch connector with ignition switch OFF.<br>2) Check for proper connection to terminal of 4L/N switch connector.<br>3) If connection is OK, measure voltage between “PNK/WHT” terminal of 4L/N switch connector and vehicle body ground with ignition switch ON.<br>*Is it 10 – 14 V?* | Go to Step 3. | Go to Step 4. |

www.cargeek.ir

www.CarGeek.ir


| Step | Action | Yes | No |
|---|---|---|---|
| 3 | **4L/N switch check**<br>1) Check 4L/N switch referring to “Transfer Assembly Inspection: Motor-Shift Type (Transfer with Shift Actuator)”.<br>*Is switch in good condition?* | Substitute a known-good 4WD control module and recheck. | Replace 4L/N switch. |
| 4 | **Wire harness check**<br>1) Disconnect connector from 4WD control module connector “E91” with ignition switch OFF.<br>2) Check for proper connection to “E91-13” terminal of 4WD control module connector.<br>3) If OK, measure resistance between “PNK/WHT” terminal of 4L/N switch connector and “E91-13” terminal of 4WD control module connector.<br>*Is it 1 Ω or less?* | Substitute a known-good 4WD control module and recheck. | “PNK/WHT” wire is open or high resistance. |

## DTC C1228: 4L/N Switch Circuit Short

S5JB0A3314046

### Wiring Diagram

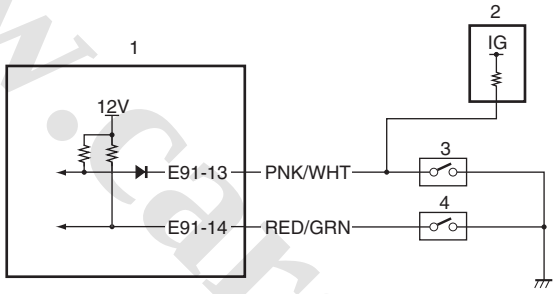


[A]

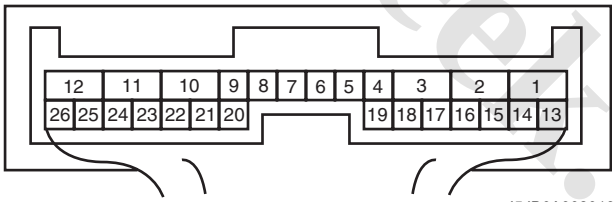


I5JB0A332018-01

| | |
|---|---|
| [A]: 4WD control module connector “E91” (viewed from harness side) | 3. 4L/N switch |
| 1. 4WD control module | 4. Center differential lock switch |
| 2. TCM | |

### DTC Detecting Condition and Trouble Area

| DTC detecting condition | Trouble area |
|---|---|
| Though transfer shift actuator motor position switch is “4L-lock” position, the OFF signal is not input from the 4L/N switch. | • 4L/N switch<br>• 4L/N switch circuit<br>• 4WD control module |

### DTC Confirmation Procedure

1) Clear DTC using scan tool.
2) Select transfer switch to “4L-lock” position and keep its position for 1 min.
3) Check DTC.

www.cargeek.ir

www.CarGeek.ir

**Troubleshooting**

| Step | Action | Yes | No |
|---|---|---|---|
| 1 | *Was "4WD control system check" performed?* | Go to Step 2. | Go to "4WD Control System Check: Motor-Shift Type (Transfer with Shift Actuator)". |
| 2 | **4L/N switch circuit check**<br>1) Disconnect 4L/N switch connector with ignition switch OFF.<br>2) Check for proper connection to terminal of 4L/N switch connector.<br>3) If connection is OK, measure voltage between "PNK/WHT" terminal of 4L/N switch connector and vehicle body ground with ignition switch ON.<br>*Is it 10 – 14 V?* | Go to Step 3. | Go to Step 4. |
| 3 | **4L/N switch check**<br>1) Check 4L/N switch referring to "Transfer Assembly Inspection: Motor-Shift Type (Transfer with Shift Actuator)".<br>*Is switch in good condition?* | Substitute a known-good 4WD control module and recheck. | Replace 4L/N switch. |
| 4 | **Wire harness check**<br>1) Disconnect connector from 4WD control module connector "E91" with ignition switch OFF.<br>2) Check for proper connection to "E91-13" terminal of 4WD control module connector.<br>3) If OK, measure resistance between "PNK/WHT" terminal of 4L/N switch connector and "E91-13" terminal of 4WD control module connector.<br>*Is it 1 MΩ or more?* | Substitute a known-good 4WD control module and recheck. | "PNK/WHT" wire is shorted to ground circuit. |

www.cargeek.ir

www.cargeek.ir

www.CarGeek.ir


## DTC C1230: Transfer Actuator Circuit Malfunction

S5JB0A3314047

### Wiring Diagram

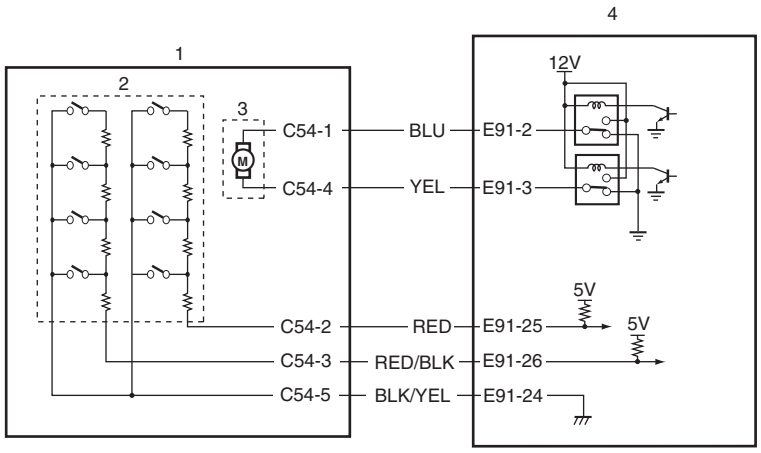


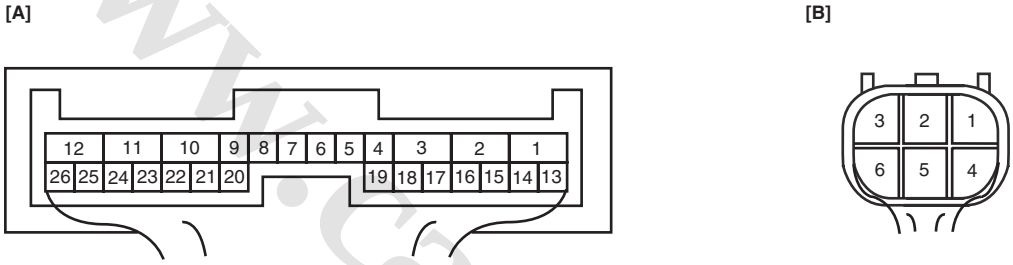


I5JB0A332017-01

| | |
|---|---|
| [A]: 4WD control module connector “E91” (viewed from harness side) | 2. Transfer shift actuator motor position switch |
| [B]: Transfer shift actuator connector “C54” (engine harness side) (viewed from harness side) | 3. Transfer shift actuator motor |
| 1. Transfer shift actuator | 4. 4WD control module |

### DTC Detecting Condition and Trouble Area

| DTC detecting condition | Trouble area |
|---|---|
| Select transfer switch to each position, and then transfer shift actuator position switch is not changed for more than 3 seconds. | • Transfer shift actuator<br>• Transfer shift actuator circuit<br>• 4WD control module |

### DTC Confirmation Procedure

1) Clear DTC using scan tool.
2) Select transfer switch to “4H” position and keep its position for 10 seconds. Similarly select transfer switch to “4H-lock”, “N” and “4L-lock” position.
3) Check DTC.

### Troubleshooting

| Step | Action | Yes | No |
|---|---|---|---|
| 1 | *Was “4WD control system check” performed?* | Go to Step 2. | Go to “4WD Control System Check: Motor-Shift Type (Transfer with Shift Actuator)”. |

www.cargeek.ir

www.CarGeek.ir

| Step | Action | Yes | No |
|---|---|---|---|
| 2 | **Transfer shift actuator circuit check**<br>1) Disconnect transfer shift actuator connector “C54” with ignition switch OFF.<br>2) Check for proper connection to “C54-1” and “C54-4” terminals of transfer shift actuator connector.<br>3) If connection is OK, measure voltage between “C54-1” or “C54-4” terminal of transfer shift actuator connector and vehicle body ground.<br>*Is it 10 – 14 V?* | Go to Step 3. | Go to Step 4. |
| 3 | **Transfer shift actuator check**<br>1) Check transfer shift actuator referring to “Transfer Assembly Inspection: Motor-Shift Type (Transfer with Shift Actuator)”.<br>*Is actuator in good condition?* | Substitute a known-good 4WD control module and recheck. | Replace transfer shift actuator. |
| 4 | **Wire harness check**<br>1) Disconnect connector from 4WD control module connector “E91” with ignition switch OFF.<br>2) Check for open and high resistance or shorted to ground in related circuits.<br>• Between “C54-1” terminal of transfer shift actuator connector and “E91-22” terminal of 4WD control module connector<br>• Between “C54-4” terminal of transfer shift actuator connector and “E91-3” terminal of 4WD control module connector<br>*Are they in good condition?* | Substitute a known-good 4WD control module and recheck. | Repair circuit. |

## DTC C1237: Center Differential Lock Switch Circuit Open

S5JB0A3314048

### Wiring Diagram

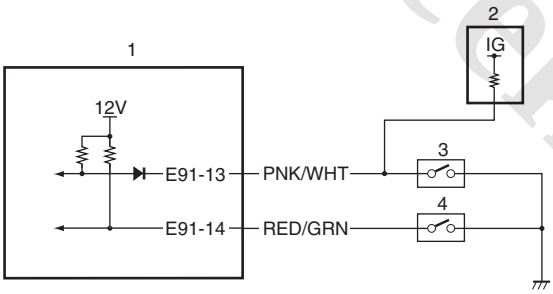


[A]

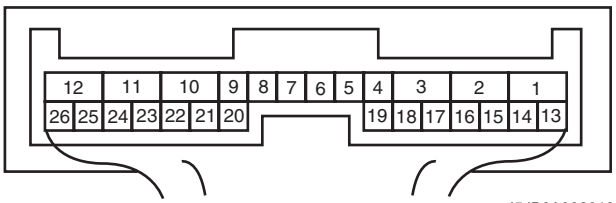


I5JB0A332018-01

| | |
|---|---|
| [A]: 4WD control module connector “E91” (viewed from harness side) | 3. 4L/N switch |
| 1. 4WD control module | 4. Center differential lock switch |
| 2. TCM | |

www.cargeek.ir

www.CarGeek.ir


**DTC Detecting Condition and Trouble Area**

| DTC detecting condition | Trouble area |
|---|---|
| Though transfer shift actuator motor position switch is “4H” position, the ON signal is not input from the center differential lock switch. | • Center differential lock switch<br>• Center differential lock switch circuit<br>• 4WD control module |

**DTC Confirmation Procedure**

1) Clear DTC using scan tool.
2) Select transfer switch to “4H” position and keep its position for 1 min.
3) Check DTC.

**Troubleshooting**

| Step | Action | Yes | No |
|---|---|---|---|
| 1 | *Was “4WD control system check” performed?* | Go to Step 2. | Go to “4WD Control System Check: Motor-Shift Type (Transfer with Shift Actuator)”. |
| 2 | **Center differential lock switch circuit check**<br>1) Disconnect center differential lock switch connector with ignition switch OFF.<br>2) Check for proper connection to terminal of center differential lock switch connector.<br>3) If connection is OK, measure voltage between “RED/GRN” terminal of center differential lock switch connector and vehicle body ground with ignition switch ON.<br>*Is it 10 – 14 V?* | Go to Step 3. | Go to Step 4. |
| 3 | **Center differential lock switch check**<br>1) Check center differential lock switch referring to “Transfer Assembly Inspection: Motor-Shift Type (Transfer with Shift Actuator)”.<br>*Is switch in good condition?* | Substitute a known-good 4WD control module and recheck. | Replace center differential lock switch. |
| 4 | **Wire harness check**<br>1) Disconnect connector from 4WD control module connector “E91” with ignition switch OFF.<br>2) Check for proper connection to “E91-14” terminal of 4WD control module connector.<br>3) If OK, measure resistance between “RED/GRN” terminal of center differential lock switch connector and “E91-14” terminal of 4WD control module connector.<br>*Is it 1 Ω or less?* | Substitute a known-good 4WD control module and recheck. | “RED/GRN” wire is open or high resistance. |

www.cargeek.ir
www.cargeek.ir

www.CarGeek.ir

## DTC C1238: Center Differential Lock Switch Circuit Short

S5JB0A3314049

### Wiring Diagram

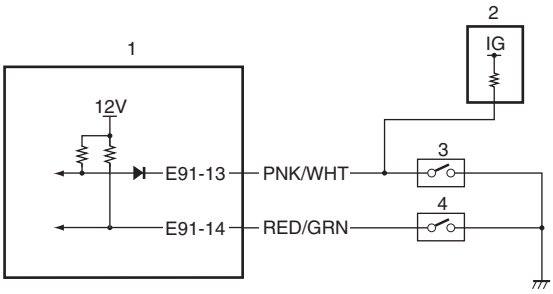


[A]

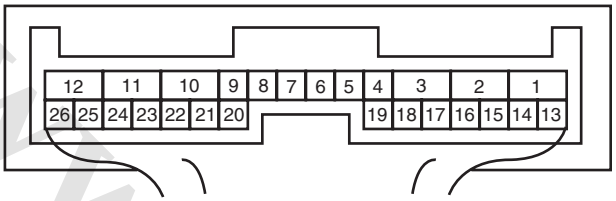


I5JB0A332018-01

| | |
|---|---|
| [A]: 4WD control module connector “E91” (viewed from harness side) | 3. 4L/N switch |
| 1. 4WD control module | 4. Center differential lock switch |
| 2. TCM | |

### DTC Detecting Condition and Trouble Area

| DTC detecting condition | Trouble area |
|---|---|
| Though transfer shift actuator motor position switch is “4L-lock” position, the OFF signal is not input from the center differential lock switch. | • Center differential lock switch<br>• Center differential lock switch circuit<br>• 4WD control module |

### DTC Confirmation Procedure

1) Clear DTC using scan tool.
2) Select transfer switch to “4L-lock” position and keep its position for 1 min.
3) Check DTC.

### Troubleshooting

| Step | Action | Yes | No |
|---|---|---|---|
| 1 | *Was “4WD control system check” performed?* | Go to Step 2. | Go to “4WD Control System Check: Motor-Shift Type (Transfer with Shift Actuator)”. |
| 2 | **Center differential lock switch circuit check**<br>1) Disconnect center differential lock switch connector with ignition switch OFF.<br>2) Check for proper connection to terminal of center differential lock switch connector.<br>3) If connection is OK, measure voltage between “RED/GRN” terminal of center differential lock switch connector and vehicle body ground with ignition switch ON.<br>*Is it 10 – 14 V?* | Go to Step 3. | Go to Step 4. |

www.cargeek.ir

www.CarGeek.ir


| Step | Action | Yes | No |
|---|---|---|---|
| 3 | **Center differential lock switch check**<br>1) Check center differential lock switch referring to “Transfer Assembly Inspection: Motor-Shift Type (Transfer with Shift Actuator)”.<br>*Is switch in good condition?* | Substitute a known-good 4WD control module and recheck. | Replace center differential lock switch. |
| 4 | **Wire harness check**<br>1) Disconnect connector from 4WD control module connector “E91” with ignition switch OFF.<br>2) Check for proper connection to “E91-14” terminal of 4WD control module connector.<br>3) If OK, measure resistance between “RED/GRN” terminal of center differential lock switch connector and “E91-14” terminal of 4WD control module connector.<br>*Is it 1 MΩ or more?* | Substitute a known-good 4WD control module and recheck. | “RED/GRN” wire is shorted to ground circuit. |

## DTC C1240: 4WD Control Module Power Supply Circuit Malfunction

S5JB0A3314050

### Wiring Diagram

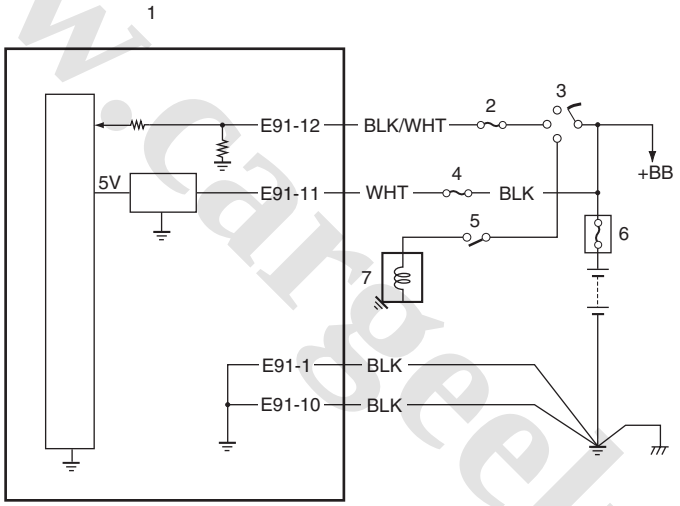


[A]

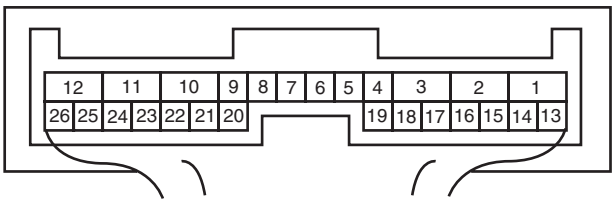


I5JB0A332019-01

| | |
|---|---|
| [A]: 4WD control module connector “E91” (viewed from harness side) | 4. “4WD” fuse |
| 1. 4WD control module | 5. Shift switch (for A/T model) or CPP switch (for M/T model) |
| 2. “IG COIL” fuse | 6. Main fuse box |
| 3. Ignition switch | 7. Starting motor |

www.cargeek.ir

www.CarGeek.ir

**DTC Detecting Condition and Trouble Area**

| DTC detecting condition | Trouble area |
|---|---|
| 4WD control module power supply voltage is out of specification while vehicle is running at 20 km/h (12 mph) or more. | • 4WD control module power supply circuit |

**DTC Confirmation Procedure**

1) Clear DTC using scan tool.
2) Start engine and drive vehicle at 30 km/h (19 mph) or more vehicle speed at least for 1 min.
3) Stop vehicle and check DTC.

**Troubleshooting**

| Step | Action | Yes | No |
|---|---|---|---|
| 1 | *Was "4WD control system check" performed?* | Go to Step 2. | Go to "4WD Control System Check: Motor-Shift Type (Transfer with Shift Actuator)". |
| 2 | **4WD control module power circuit check**<br>1) Disconnect 4WD control module connector with ignition switch OFF.<br>2) Check for proper connection to "E91" terminal of 4WD control module connector.<br>3) If connection is OK, measure voltage between "E91-11" terminal of 4WD control module connector and vehicle body ground with ignition switch ON.<br>*Is it 10 – 14 V?* | Poor "E91-11" connection or intermittent trouble. Check for intermittent referring to "Intermittent and Poor Connection Inspection: in Section 00". If wire and connections are OK, substitute a known-good 4WD control module and recheck. | "4WD" fuse blown, "WHT" or "BLK" wire is circuit open or circuit short. |

## DTC C1243: Internal Circuit Malfunction of 4WD Control Module

S5JB0A3314056

**DTC Detecting Condition and Trouble Area**

| DTC detecting condition | Trouble area |
|---|---|
| EEPROM Error | • 4WD control module |

**DTC Confirmation Procedure**

1) Clear DTC using scan tool.
2) Turn ignition switch to ON position for 60 seconds.
3) Check DTC.

**Troubleshooting**

Substitute a known-good 4WD control module and recheck.

www.cargeek.ir

www.CarGeek.ir


## DTC C1246: Clutch Pedal Position (CPP) Switch Circuit Short

S5JB0A3314051

### Wiring Diagram

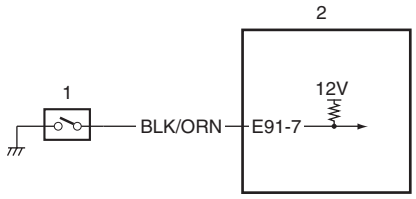


[A]

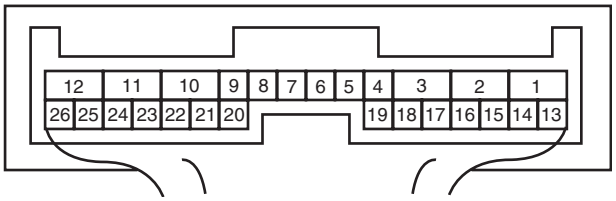


I5JB0A332020-01

| | |
|---|---|
| [A]: 4WD control module connector "E91" (viewed from harness side) | 2. 4WD control module |
| 1. CPP switch | |

### DTC Detecting Condition and Trouble Area

| DTC detecting condition | Trouble area |
|---|---|
| CPP switch signal is input when vehicle speed is 30 km/h (19 mph). | • CPP switch<br>• CPP switch circuit<br>• 4WD control module |

### DTC Confirmation Procedure

1) Clear DTC using scan tool.
2) Start engine and drive vehicle at 50 km/h (31 mile/h) or more vehicle speed at least for 1 min.
3) Stop vehicle and check DTC.

### Troubleshooting

| Step | Action | Yes | No |
|---|---|---|---|
| 1 | *Was "4WD control system check" performed?* | Go to Step 2. | Go to "4WD Control System Check: Motor-Shift Type (Transfer with Shift Actuator)". |
| 2 | **CPP switch circuit check**<br>1) Disconnect CPP switch connector with ignition switch OFF.<br>2) Check for proper connection to terminal of CPP switch connector.<br>3) If connection is OK, measure voltage between "BLK/ORN" terminal of CPP switch connector and vehicle body ground with ignition switch ON.<br>*Is it 10 – 14 V?* | Go to Step 3. | Go to Step 4. |
| 3 | **CPP switch check**<br>1) Check CPP switch referring to "Clutch Pedal Position (CPP) Switch Inspection and Adjustment: in Section 5C".<br>*Is switch in good condition?* | Substitute a known-good 4WD control module and recheck. | Replace CPP switch. |

www.cargeek.ir

www.CarGeek.ir

| Step | Action | Yes | No |
|---|---|---|---|
| 4 | **Wire harness check**<br>1) Disconnect connector from 4WD control module connector “E91” with ignition switch OFF.<br>2) Check for proper connection to “E91-7” terminal of 4WD control module connector.<br>3) If OK, measure resistance between “BLK/ORN” terminal of CPP switch connector and “E91-7” terminal of 4WD control module connector.<br>*Is it 1 MΩ or more?* | Substitute a known-good 4WD control module and recheck. | “BLK/ORN” wire is shorted to ground circuit. |

## DTC U1073: Control Module Communication Buss Off

S5JB0A3314052

### Wiring Diagram

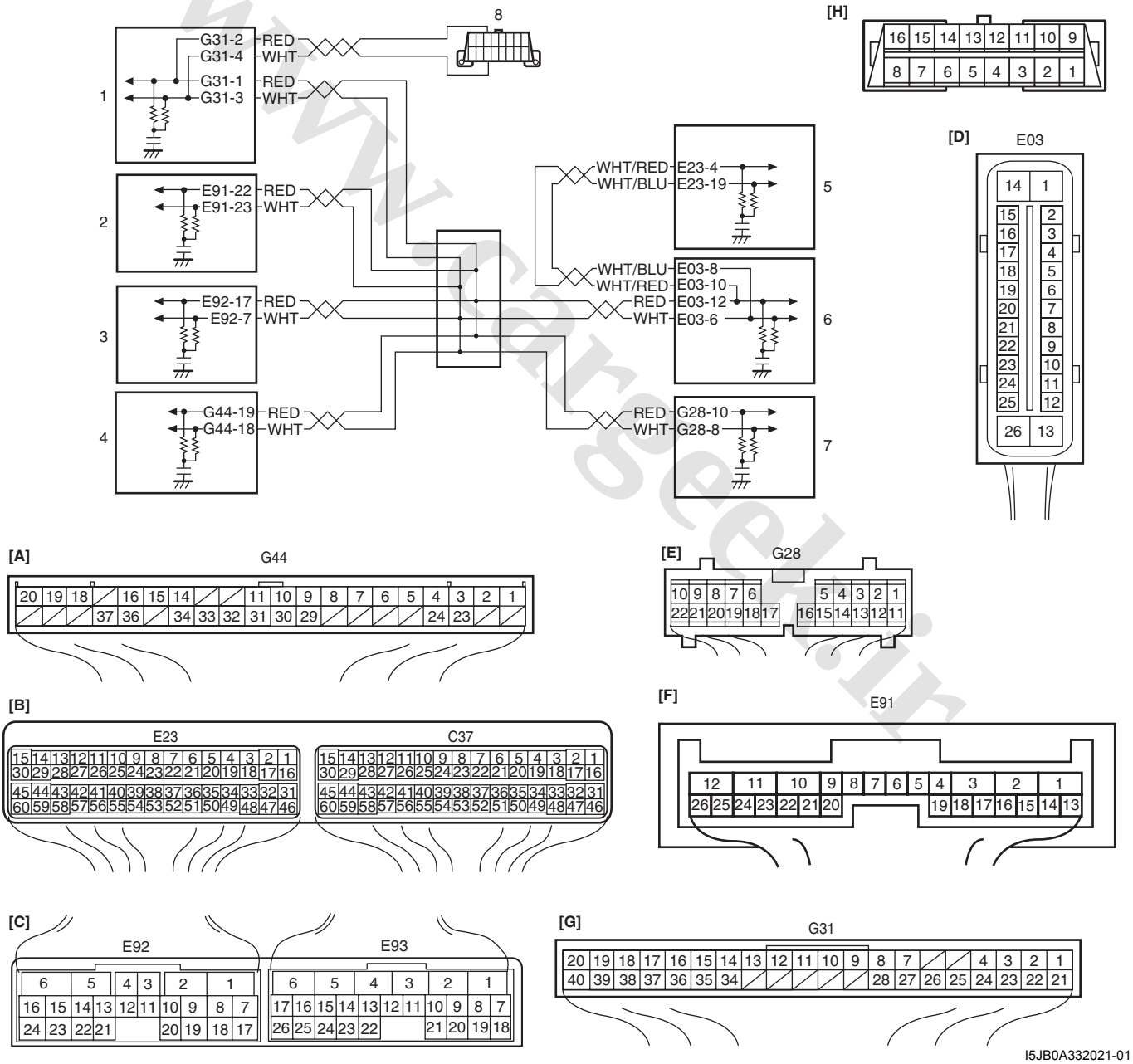


I5JB0A332021-01

www.cargeek.ir

www.CarGeek.ir


| | |
|---|---|
| [A]: Keyless start control module connector (if equipped) (viewed from harness side) | 1. BCM |
| [B]: ECM connector (viewed from harness side) | 2. 4WD control module |
| [C]: TCM connector (for A/T model) (viewed from harness side) | 3. TCM (for A/T model) |
| [D]: ABS hydraulic unit/control module connector (viewed from terminal side) | 4. Keyless start control module (if equipped) |
| [E]: Combination meter connector (viewed from harness side) | 5. ECM |
| [F]: 4WD control module connector (viewed from harness side) | 6. ABS hydraulic unit / control module |
| [G]: BCM connector (viewed from harness side) | 7. Combination meter |
| [H]: DLC (viewed from harness side) | 8. DLC |

### DTC Detecting Condition and Trouble Area

| DTC detecting condition | Trouble area |
|---|---|
| Transmission error of communication data for 4WD control module is detected more than 7 times at more than specified error counts continuously. | • CAN communication circuit<br>• ECM<br>• BCM<br>• 4WD control module<br>• TCM<br>• Combination meter<br>• Keyless start control module (if equipped)<br>• ABS hydraulic unit / control module |

### DTC Confirmation Procedure

1) Clear DTC using scan tool.
2) Start engine and run it for 1 min. or more.
3) Stop vehicle and check DTC.

### Troubleshooting

| Step | Action | Yes | No |
|---|---|---|---|
| 1 | *Was “4WD control system check” performed?* | Go to Step 2. | Go to “4WD Control System Check: Motor-Shift Type (Transfer with Shift Actuator)”. |
| 2 | **Control module connector check**<br>1) Check connection of connectors of all control modules communicating by means of CAN.<br>2) Recheck DTC in TCM.<br>*Is DTC U1073 detected?* | Go to Step 3. | Intermittent trouble. Check for intermittent referring to “Intermittent and Poor Connection Inspection: in Section 00”. |
| 3 | **CAN communication circuit check**<br>1) Turn ignition switch to OFF position.<br>2) Disconnect connectors of all control modules communicating by means of CAN.<br>3) Check CAN communication circuit between control modules for open, short and high resistance.<br>*Is each CAN communication circuit in good condition?* | Go to Step 4. | Repair circuit. |

www.cargeek.ir

www.CarGeek.ir

| Step | Action | Yes | No |
|---|---|---|---|
| 4 | **Check DTC**<br>1) Turn ignition switch to OFF position.<br>2) Disconnect each connector.<br>• ECM<br>• ABS hydraulic unit / control module<br>• BCM<br>• TCM (if equipped)<br>• Keyless start control module (if equipped)<br>3) Recheck DTC in 4WD control module.<br>*Is DTC U1073 detected?* | Check 4WD control module power and ground circuit. If circuits are OK, substitute a known-good 4WD control module and recheck. | Check applicable control module power and ground circuit. If circuit is OK, substitute a known-good applicable control module and recheck. |

## DTC U1100: Lost Communication with ECM

S5JB0A3314053

### Wiring Diagram

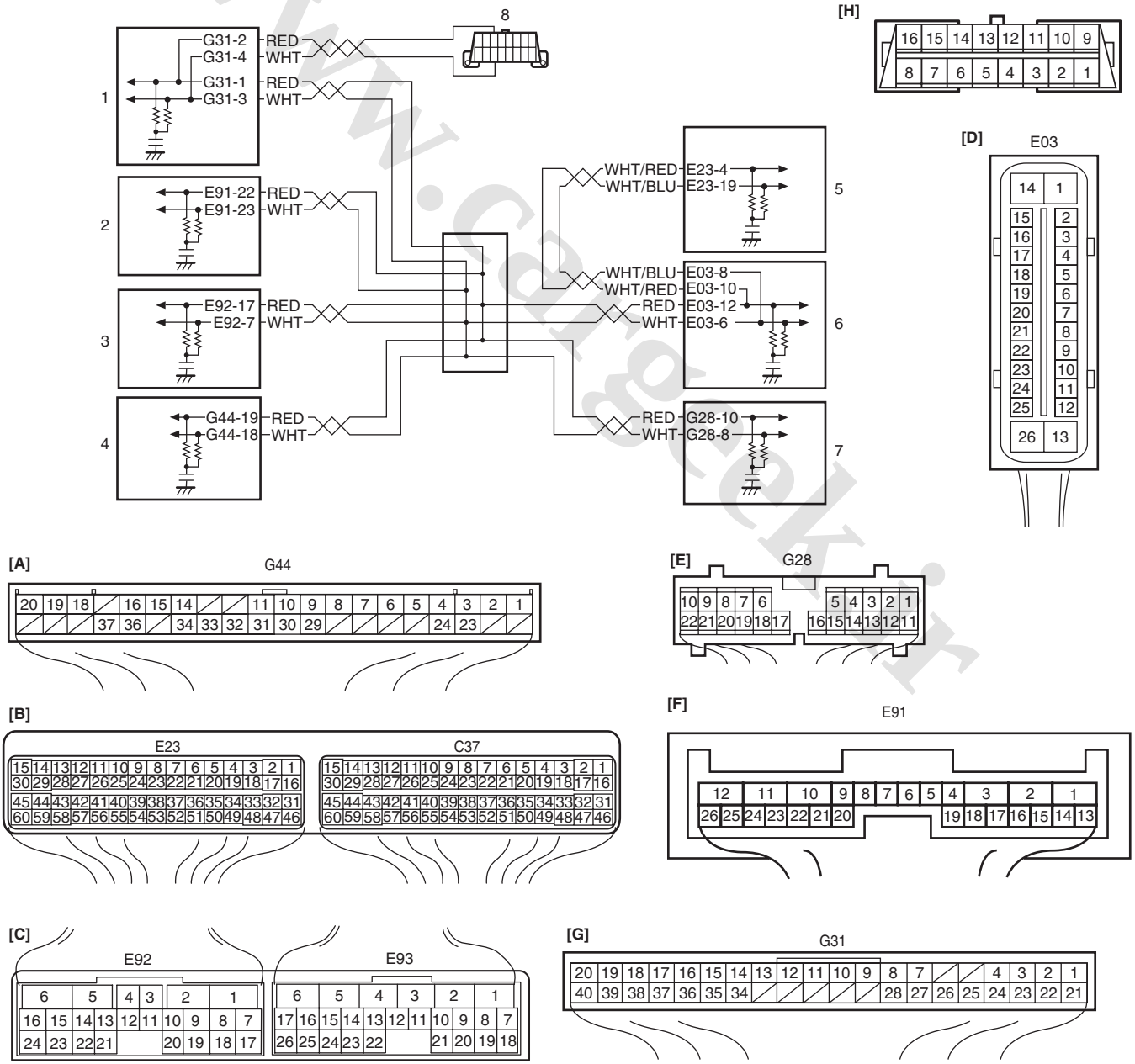


I5JB0A332021-01

www.cargeek.ir

www.CarGeek.ir


| | |
|---|---|
| [A]: Keyless start control module connector (if equipped) (viewed from harness side) | 1. BCM |
| [B]: ECM connector (viewed from harness side) | 2. 4WD control module |
| [C]: TCM connector (for A/T model) (viewed from harness side) | 3. TCM (for A/T model) |
| [D]: ABS hydraulic unit/control module connector (viewed from terminal side) | 4. Keyless start control module (if equipped) |
| [E]: Combination meter connector (viewed from harness side) | 5. ECM |
| [F]: 4WD control module connector (viewed from harness side) | 6. ABS hydraulic unit / control module |
| [G]: BCM connector (viewed from harness side) | 7. Combination meter |
| [H]: DLC (viewed from harness side) | 8. DLC |

**DTC Detecting Condition and Trouble Area**

| DTC detecting condition | Trouble area |
|---|---|
| Reception error of communication data for ECM is detected for longer than specified time continuously. | • CAN communication circuit<br>• ABS hydraulic unit / control module<br>• ECM<br>• 4WD control module |

**DTC Confirmation Procedure**

1) Clear DTC using scan tool.
2) Start engine and run it for 1 min. or more.
3) Stop vehicle and check DTC.

**Troubleshooting**

| Step | Action | Yes | No |
|---|---|---|---|
| 1 | *Was "4WD control system check" performed?* | Go to Step 2. | Go to "4WD Control System Check: Motor-Shift Type (Transfer with Shift Actuator)". |
| 2 | **DTC check**<br>1) Check DTC in 4WD control module.<br>*Is DTC U1100 and DTC U1073 detected together?* | Go to "DTC U1073: Control Module Communication Buss Off: Motor-Shift Type (Transfer with Shift Actuator)". | Go to Step 3. |
| 3 | **DTC check**<br>1) Check DTC in ECM.<br>*Is DTC P1674 detected?* | Go to "DTC P1674: CAN Communication (Bus Off Error): in Section 1A". | Go to Step 4. |
| 4 | **Check each control module connectors**<br>1) Check connection of connectors of all control modules communicating by means of CAN.<br>2) Recheck in 4WD control module.<br>*Is DTC U1100 detected?* | Go to Step 5. | NO Intermittent trouble. Check for intermittent referring to "Intermittent and Poor Connection Inspection: in Section 00". |
| 5 | **CAN communication circuit check**<br>1) Turn ignition switch to OFF position.<br>2) Disconnect connectors of all control modules communicating by means of CAN.<br>3) Check CAN communication circuit between control modules for open, short and high resistance.<br>*Is each CAN communication circuit in good condition?* | Check ECM power and ground circuit. If circuit is OK, substitute a known-good ECM and recheck. | Repair circuit. |

www.cargeek.ir

www.CarGeek.ir

## DTC U1101: Lost Communication with TCM

S5JB0A3314054

### Wiring Diagram

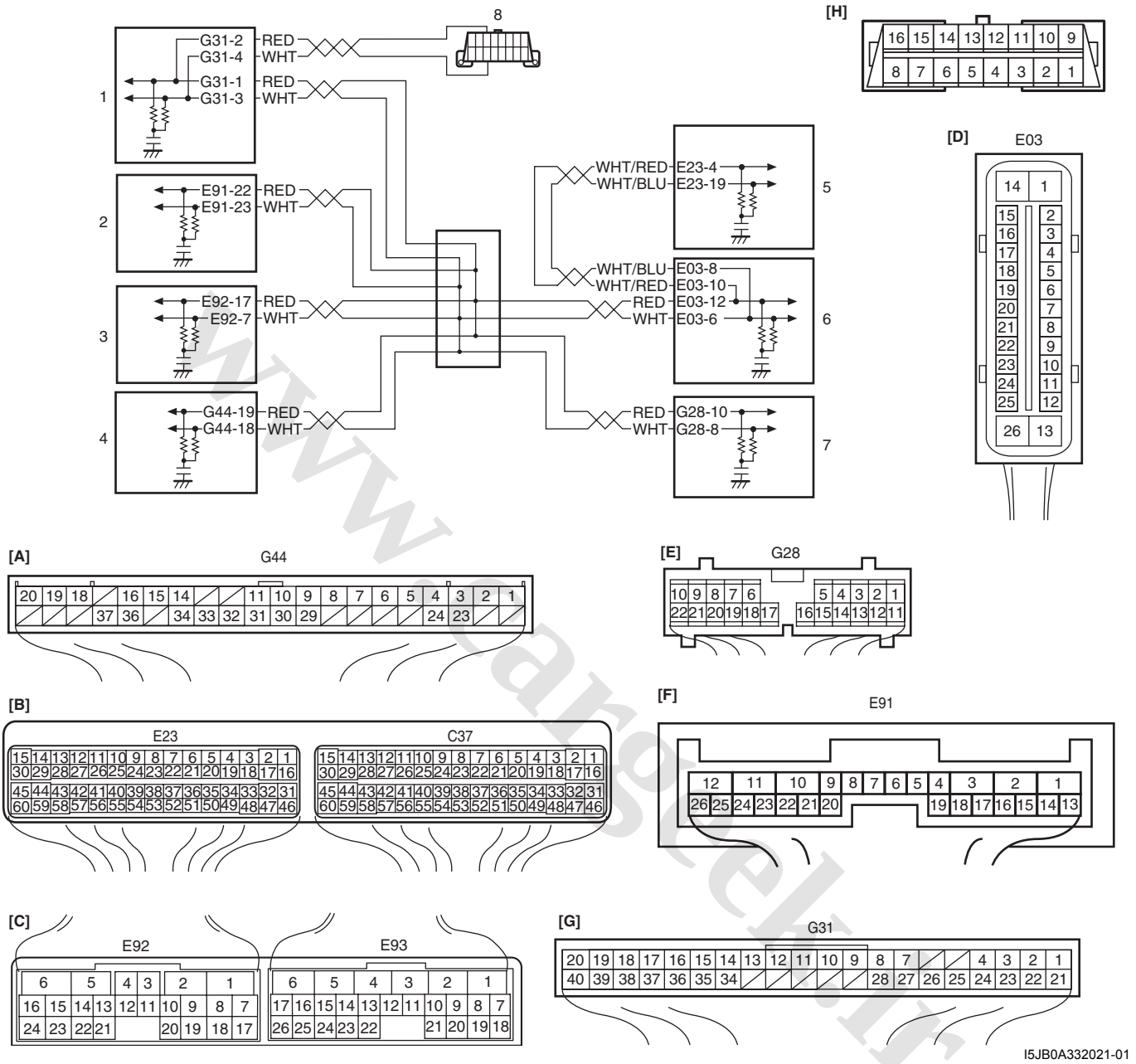


I5JB0A332021-01

| | |
|---|---|
| [A]: Keyless start control module connector (if equipped) (viewed from harness side) | 1. BCM |
| [B]: ECM connector (viewed from harness side) | 2. 4WD control module |
| [C]: TCM connector (for A/T model) (viewed from harness side) | 3. TCM (for A/T model) |
| [D]: ABS hydraulic unit/control module connector (viewed from terminal side) | 4. Keyless start control module (if equipped) |
| [E]: Combination meter connector (viewed from harness side) | 5. ECM |
| [F]: 4WD control module connector (viewed from harness side) | 6. ABS hydraulic unit / control module |
| [G]: BCM connector (viewed from harness side) | 7. Combination meter |
| [H]: DLC (viewed from harness side) | 8. DLC |

www.cargeek.ir

www.CarGeek.ir


**DTC Detecting Condition and Trouble Area**

| DTC detecting condition | Trouble area |
|---|---|
| Reception error of communication data for TCM is detected for longer than specified time continuously. | • CAN communication circuit<br>• TCM<br>• 4WD control module |

**DTC Confirmation Procedure**

1) Clear DTC using scan tool.
2) Start engine and run it for 1 min. or more.
3) Stop vehicle and check DTC.

**Troubleshooting**

| Step | Action | Yes | No |
|---|---|---|---|
| 1 | *Was "4WD control system check" performed?* | Go to Step 2. | Go to "4WD Control System Check: Motor-Shift Type (Transfer with Shift Actuator)". |
| 2 | **DTC check**<br>1) Check DTC in 4WD control module.<br>*Is DTC U1100 and DTC U1073 detected together?* | Go to "DTC U1073: Control Module Communication Buss Off: Motor-Shift Type (Transfer with Shift Actuator)". | Go to Step 3. |
| 3 | **DTC check**<br>1) Check DTC in TCM.<br>*Is DTC P1774 detected?* | Go to "DTC P1774: CAN Communication Bus Off: in Section 5A". | Go to Step 4. |
| 4 | **Check each control module connectors**<br>1) Check connection of connectors of all control modules communicating by means of CAN.<br>2) Recheck in 4WD control module.<br>*Is DTC U1100 detected?* | Go to Step 5. | Intermittent trouble. Check for intermittent referring to "Intermittent and Poor Connection Inspection: in Section 00". |
| 5 | **CAN communication circuit check**<br>1) Turn ignition switch to OFF position.<br>2) Disconnect connectors of all control modules communicating by means of CAN.<br>3) Check CAN communication circuit between control modules for open, short and high resistance.<br>*Is each CAN communication circuit in good condition?* | Check TCM power and ground circuit. If circuit is OK, substitute a known-good TCM and recheck. | Repair circuit. |

www.cargeek.ir
www.cargeek.ir

www.CarGeek.ir

## DTC U1121: Lost Communication with ABS Hydraulic Unit / Control Module

S5JB0A3314055

### Wiring Diagram

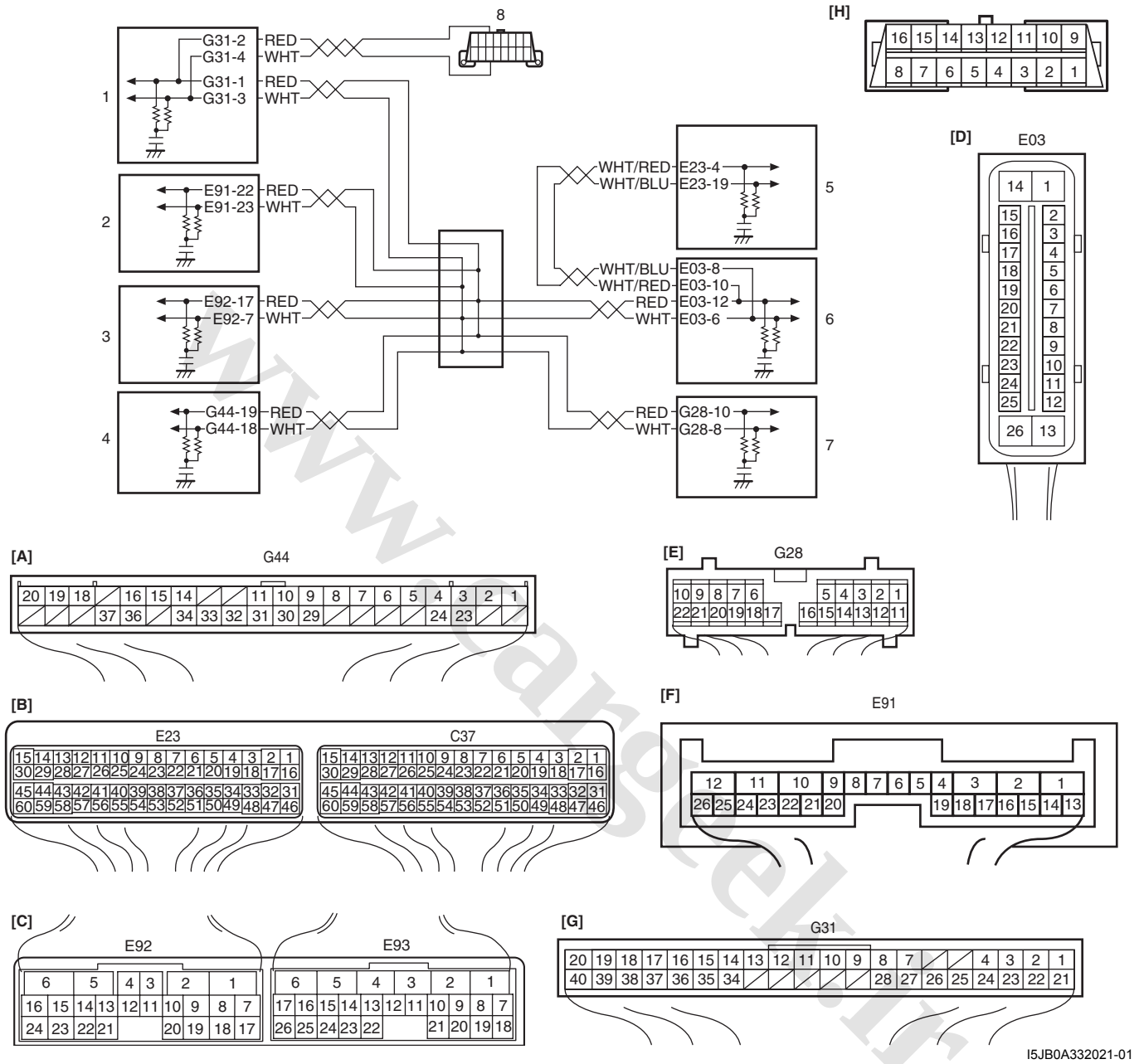


I5JB0A332021-01

| | |
|---|---|
| [A]: Keyless start control module connector (if equipped) (viewed from harness side) | 1. BCM |
| [B]: ECM connector (viewed from harness side) | 2. 4WD control module |
| [C]: TCM connector (for A/T model) (viewed from harness side) | 3. TCM (for A/T model) |
| [D]: ABS hydraulic unit/control module connector (viewed from terminal side) | 4. Keyless start control module (if equipped) |
| [E]: Combination meter connector (viewed from harness side) | 5. ECM |
| [F]: 4WD control module connector (viewed from harness side) | 6. ABS hydraulic unit / control module |
| [G]: BCM connector (viewed from harness side) | 7. Combination meter |
| [H]: DLC (viewed from harness side) | 8. DLC |

www.cargeek.ir

www.CarGeek.ir


**DTC Detecting Condition and Trouble Area**

| DTC detecting condition | Trouble area |
|---|---|
| Reception error of communication data for ABS hydraulic unit / control module is detected for longer than specified time continuously. | • CAN communication circuit<br>• ABS hydraulic unit / control module<br>• 4WD control module |

**DTC Confirmation Procedure**

1) Clear DTC using scan tool.
2) Start engine and run it for 1 min. or more.
3) Stop vehicle and check DTC.

**Troubleshooting**

| Step | Action | Yes | No |
|---|---|---|---|
| 1 | *Was "4WD control system check" performed?* | Go to Step 2. | Go to "4WD Control System Check: Motor-Shift Type (Transfer with Shift Actuator)". |
| 2 | **DTC check**<br>1) Check DTC in 4WD control module.<br>*Is DTC U1100 and DTC U1073 detected together?* | Go to "DTC U1073: Control Module Communication Buss Off: Motor-Shift Type (Transfer with Shift Actuator)". | Go to Step 3. |
| 3 | **DTC check**<br>1) Check DTC in ABS hydraulic unit / control module.<br>*Is DTC PU1073 detected?* | Go to "DTC U1073: Control Module Communication Bus Off: in Section 4E". | Go to Step 4. |
| 4 | **Check each control module connectors**<br>1) Check connection of connectors of all control modules communicating by means of CAN.<br>2) Recheck in 4WD control module.<br>*Is DTC U1100 detected?* | Go to Step 5. | Intermittent trouble. Check for intermittent referring to "Intermittent and Poor Connection Inspection: in Section 00". |
| 5 | **CAN communication circuit check**<br>1) Turn ignition switch to OFF position.<br>2) Disconnect connectors of all control modules communicating by means of CAN.<br>3) Check CAN communication circuit between control modules for open, short and high resistance.<br>*Is each CAN communication circuit in good condition?* | Check ABS hydraulic unit / control module power and ground circuit. If circuit is OK, substitute a known-good ABS hydraulic unit / control module and recheck. | Repair circuit. |

## Inspection of 4WD Control Module and Its Circuits

S5JB0A3314037

4WD control module and its circuits can be checked at coupler connected to 4WD control module by measuring voltage, pulse signal.

**⚠ CAUTION**

**4WD control module cannot be checked by itself. It is strictly prohibited to connect voltmeter or ohmmeter to 4WD control module with couplers disconnected from it.**

www.cargeek.ir

www.CarGeek.ir

### Voltage and Signal Check

1) Check voltage using voltmeter (1) connected to each terminal of couplers.
2) Check signal using oscilloscope (2) connected to each terminal of couplers.

**NOTE**

- **As each terminal voltage is affected by the battery voltage, confirm that it is 11 V or more when ignition switch is turned ON.**
- **Pulse signal cannot be measured by voltmeter. It can be measured by oscilloscope.**
- **Item with asterisk (*) in normal voltage column can be read only by oscilloscope.**

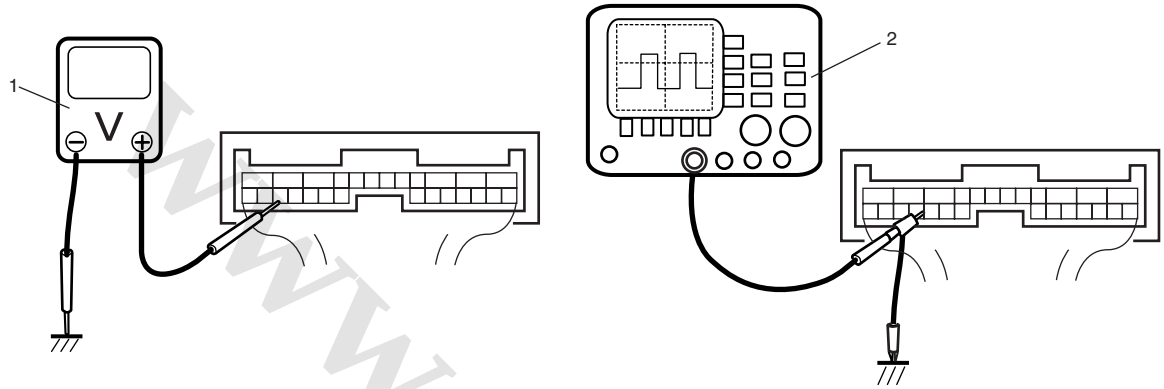


I4JA01332053-01

**Terminal arrangement of 4WD control module connector (Viewed from harness side)**

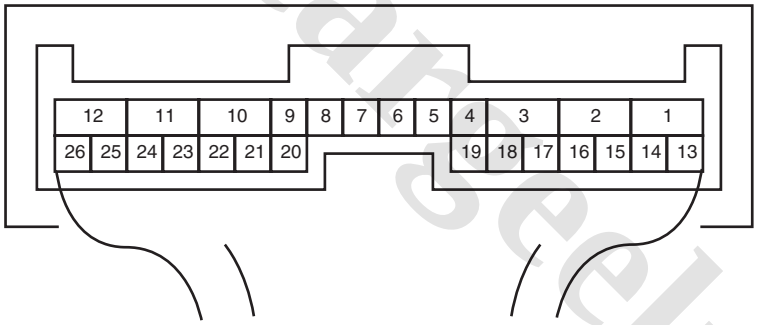


I4JA01332054-01

| Terminal Number | Wire Color | Circuit | Normal Voltage | Condition |
|---|---|---|---|---|
| E91-1 | BLK | Ground | 0 – 1 V | — |
| E91-2 | BLU | Transfer actuator motor 1 | 10 – 14 V | Ignition switch turned to ON position and transfer shift actuator being rotated N → 4H → 4H-lock direction or 4L-lock → 4H-lock direction |
| | | | 0 – 1 V | Ignition switch turned to ON position and transfer shift actuator in other than above-mentioned condition |
| E91-3 | YEL | Transfer actuator motor 2 | 10 – 14 V | Ignition switch turned to ON position and transfer shift actuator being rotated 4H-lock → 4H → N direction or 4H-lock → 4L-lock direction |
| | | | 0 – 1 V | Ignition switch turned to ON position and transfer shift actuator in other than above-mentioned condition |
| E91-4 | — | — | — | — |
| E91-5 | — | — | — | — |
| E91-6 | — | — | — | — |
| E91-7 | BLK/ORN | Clutch switch | 10 – 14 V | Ignition switch turned to ON position and clutch pedal released |
| | | | 0 – 1 V | Ignition switch turned to ON position and clutch pedal kept depressing |
| E91-8 | PNK | Diagnosis switch | 4 – 5 V | Ignition switch turned to ON position |

www.cargeek.ir

www.CarGeek.ir


| Terminal Number | Wire Color | Circuit | Normal Voltage | Condition |
|---|---|---|---|---|
| E91-9 | — | — | — | — |
| E91-10 | BLK | Ground | 0 – 1 V | — |
| E91-11 | WHT | Power source for internal memory | 10 – 14 V | — |
| E91-12 | BLK/WHT | Ignition switch | 10 – 14 V | Ignition switch turned to ON position |
| E91-13 | BLK/WHT | 4L/N switch | 10 – 14 V | Ignition switch turned to ON position and transfer shifted to 4H or 4H-lock position |
| | | | 0 – 1 V | Ignition switch turned to ON position and transfer shifted to 4L-lock or N position |
| E91-14 | RED/GRN | Center differential lock switch | 10 – 14 V | Ignition switch turned to ON position and transfer shifted to 4H-lock or 4L-lock position |
| | | | 0 – 1 V | Ignition switch turned to ON position and transfer shifted to N or 4H position |
| E91-15 | — | — | — | — |
| E91-16 | — | — | — | — |
| E91-17 | — | — | — | — |
| E91-18 | LT GRN | Transfer switch 1 | 10 – 14 V | Ignition switch turned to ON position and transfer switch at 4H, N or 4L-lock position |
| | | | 0 – 1 V | Ignition switch turned to ON position and transfer switch at N position |
| E91-19 | BLU/BLK | Transfer switch 2 | 10 – 14 V | Ignition switch turned to ON position and transfer switch at 4L-lock position |
| | | | 0 – 1 V | Ignition switch turned to ON position and transfer switch at 4H, 4H-lock or N position |
| E91-20 | BLU/ORN | Transfer switch 3 | 10 – 14 V | Ignition switch turned to ON position and transfer switch at 4H or N position |
| | | | 0 – 1 V | Ignition switch turned to ON position and transfer switch at 4H-lock or 4L-lock position |
| E91-21 | PPL/WHT | Data link connector (DLC) | 10 – 14 V | Ignition switch turned to ON position |
| E91-22 | RED | CAN communication line (High) | *2.5 – 3.5 V | Ignition switch turned to ON position |
| E91-23 | WHT | CAN communication line (Low) | *1.5 – 2.5 V | Ignition switch turned to ON position |
| E91-24 | BLK/YEL | Transfer actuator position switch (ground) | 0 – 1 V | — |
| E91-25 | RED | Transfer actuator position switch 1 (power) | Approx. 4 V | Ignition switch turned to ON position and transfer shifted to 4H-lock position |
| | | | Approx. 2 V | Ignition switch turned to ON position and transfer shifted to 4H position |
| | | | Approx. 1 V | Ignition switch turned to ON position and transfer shifted to 4L-lock or N position |
| | | | Approx. 0 V | Ignition switch turned to OFF position |
| E91-26 | RED/BLK | Transfer actuator position switch 2 (power) | Approx. 4 V | Ignition switch turned to ON position and transfer shifted to 4L-lock position |
| | | | Approx. 2 V | Ignition switch turned to ON position and transfer shifted to N position |
| | | | Approx. 1 V | Ignition switch turned to ON position and transfer shifted to 4H or 4H-lock position |
| | | | Approx. 0 V | Ignition switch turned to OFF position |

www.cargeek.ir

www.CarGeek.ir

# Repair Instructions

## Transfer Oil Level Check

S5JB0A3316033

1) Lift up vehicle and check oil leakage.
2) Remove oil level/filler plug (1) and check oil level is between 0 and 10 mm (0 and 0.394 in.) from the lower end of oil level / filler plug hole (2).
   If oil level is not in the range, add specified oil up to plug hole.

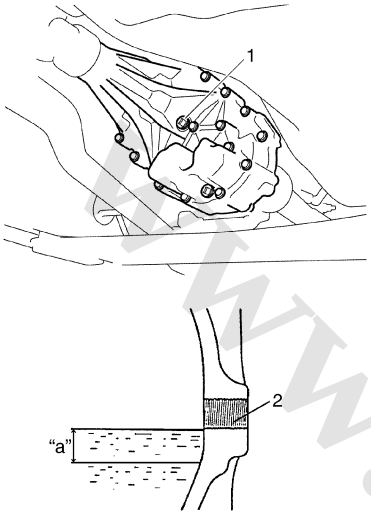


I5JB0A331001-02

| |
|---|
| "a". 0 – 10 mm (0 – 0.394 in.) |

## Transfer Oil Change

S5JB0A3316034

1) Before changing or inspecting oil, be sure to stop engine and lift vehicle horizontally.
2) Check leakage.
   If leakage exists, correct it.

**NOTE**

**Whenever vehicle is hoisted for any other service work than oil change, also be sure to check for oil leakage.**

3) Remove oil filler plug (2).
4) Remove drain plug (1), and drain oil.
5) Apply sealant to thread of drain plug (1), and tighten it to specified torque.

   **"A": Sealant 99000–31260 (SUZUKI Bond No.1217G)**

   **Tightening torque**
   **Transfer oil drain plug (a): 23 N·m (2.3 kgf-m, 17.0 lb-ft)**

6) Pour new specified oil up to lower end of oil level / filler plug hole (3).

**NOTE**

**It is highly recommended to use API GL-4 75W-90 gear oil.**

**Transfer oil specification**
**: API GL-4 (For SAE classification, refer to viscosity chart [A] in figure.)**

**Transfer oil capacity (Reference)**
**: 1.5 liters (3.2/2.6 US/Imp. pt)**

7) Apply sealant to thread of level / filler plug, and then tighten it to specified torque.

   **"A": Sealant 99000–31260 (SUZUKI Bond No.1217G)**

   **Tightening torque**
   **Transfer oil level / filler plug (b): 23 N·m (2.3 kgf-m, 17.0 lb-ft)**

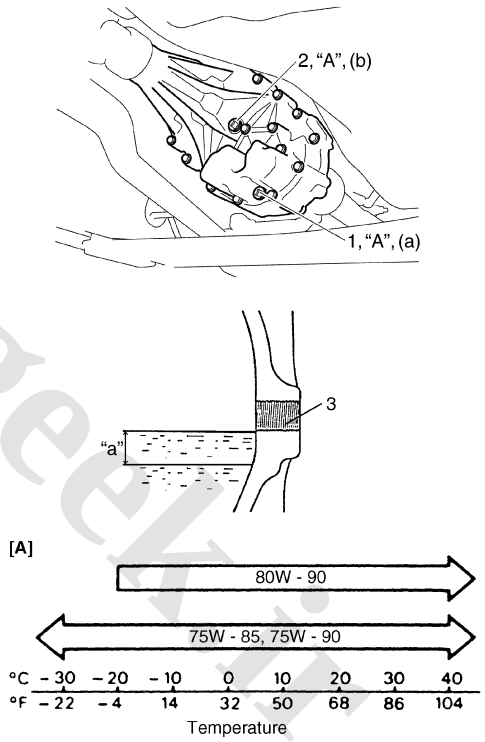


I5JB0A331002-03

| |
|---|
| "a". 0 – 10 mm (0 – 0.394 in.) |

www.cargeek.ir

www.CarGeek.ir


## Transfer Oil Seal Removal and Installation

S5JB0A3316035

### Removal

1) Lift up vehicle and drain transfer oil.
2) Remove front propeller shaft and/or rear propeller shaft referring to “Propeller Shaft Removal and Installation: in Section 3D”.
3) Remove front oil seal No.1 (1) and/or rear oil seal (2) using flat end rod or the like.

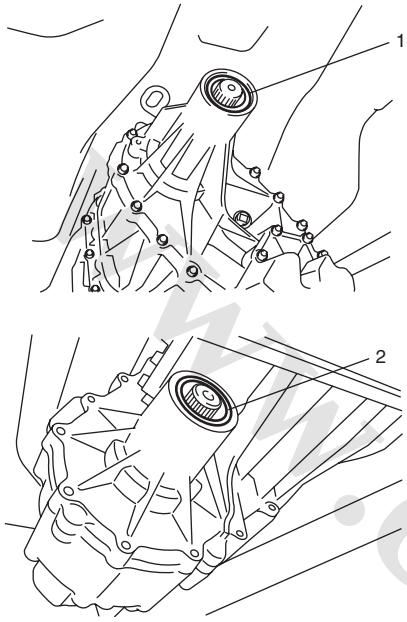


I5JB0A331031-01

### Installation

1) Install new oil seal using special tool and plastic hammer, and then apply grease to oil seal lip.

   **: Grease 99000–25010 (SUZUKI Super Grease A)**

   **Special tool**
   **(A): 09913–70123**

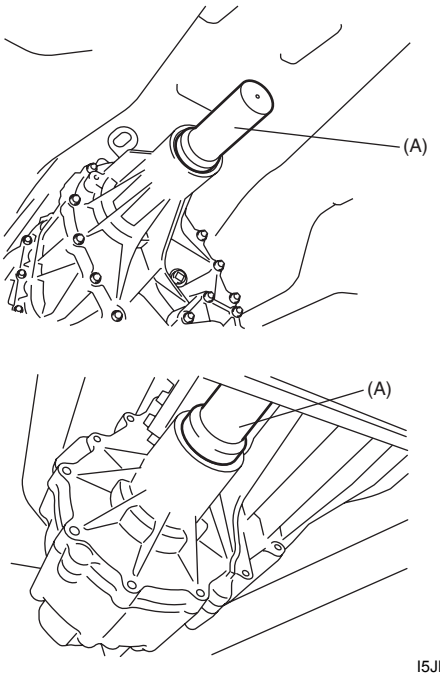


I5JB0A331032-01

2) Install front propeller shaft and/or rear propeller shaft referring to “Propeller Shaft Removal and Installation: in Section 3D”.
3) Fill transfer oil referring to “Transfer Oil Change: Motor-Shift Type (Transfer with Shift Actuator)”.

## Transfer Switch Removal and Installation

S5JB0A3316036

### Removal

Remove HVAC control module referring to “HVAC Control Module Removal and Installation: in Section 7A”, and then remove transfer switch (1) from center cluster (2).

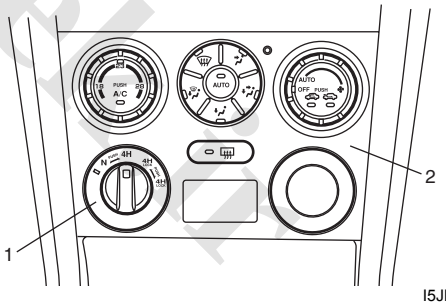


I5JB0A331003-02

### Installation

Reverse removal procedure.

www.cargeek.ir

www.CarGeek.ir

## Transfer Switch Inspection

S5JB0A3316039

Check continuity between following terminals when transfer switch (1) operated at each position.

| Switch position | Terminal |
|---|---|
| □ (2) | 1 – 2 |
| N (3) | 1 – 2 – 3 |
| 4H (4) | 1 – 3 |
| 4H-lock (5) | 1 – 3 – 4 |
| 4L-lock (6) | 1 – 4 |

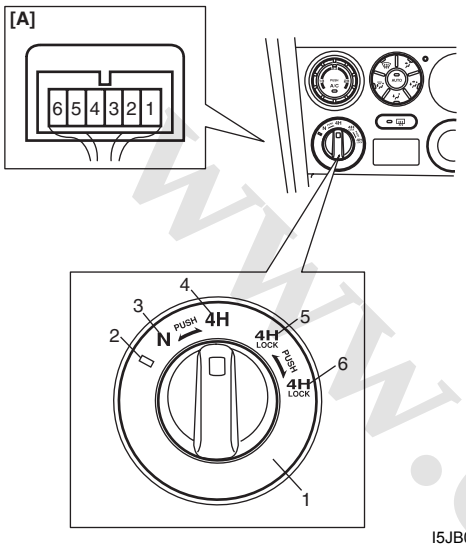


I5JB0A331004-04

[A]: Transfer switch connector (harness side view)

## 4WD Control Module Removal and Installation

S5JB0A3316038

### Removal

1) Disconnect negative (–) cable from battery.
2) If the vehicle is equipped with air bag system, disable air bag system. Refer to “Disabling Air Bag System: in Section 8B”.
3) Disconnect connectors from 4WD control module (1).
4) Remove 4WD control module with TCM by removing its nuts, and then separate 4WD control module and TCM.

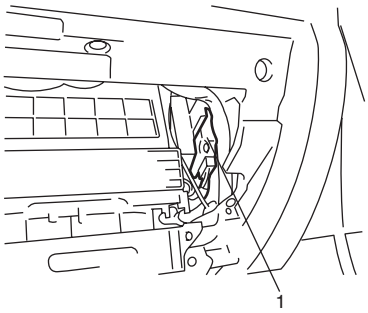


I5JB0A331005-01

### Installation

Reverse removal procedure for installation noting the following.

- Connect 4WD control module connectors securely.
- If the vehicle is equipped with air bag system, be sure to enable air bag system after 4WD control module is back in place.
  Refer to “Enabling Air Bag System: in Section 8B”.

www.cargeek.ir

www.CarGeek.ir


## Transfer Assembly Dismounting and Remounting

S5JB0A3316040

### Dismounting

1) Shift transfer to 4H position operating transfer switch.
2) Disconnect negative (–) cable from battery.
3) Remove gear shift control lever (for M/T model) referring to “Transmission Shift Control Lever Removal and Installation: in Section 5B”.
4) Drain transfer oil.
5) Remove front propeller shaft (1) and rear propeller shaft (2) referring to “Propeller Shaft Removal and Installation: in Section 3D”.
6) Remove exhaust center pipe (3) referring to “Exhaust Pipe and Muffler Removal and Installation: in Section 1K”.
7) Disconnect transfer actuator connector (4), center differential lock switch connector (5), 4L/N switch connector (6).

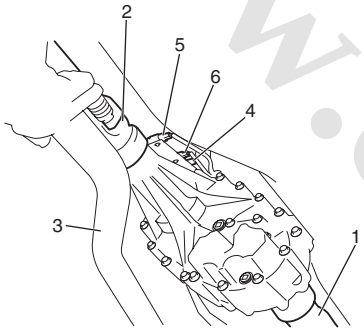


I5JB0A331006-01

8) Support engine rear mounting member (1) with transmission jack (2).
9) Remove engine rear mounting bolts (3), and then slant the transmission with transfer.

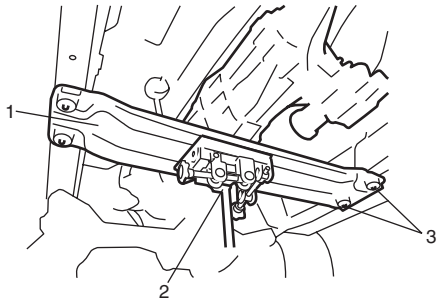


I5JB0A331007-02

10) Remove gear shift control lever rear case from transfer (for M/T model).
11) Remove transfer to transmission bolts (upper side), and then install engine rear mounting member with transmission and transfer.
12) Support transfer assembly (1) with transmission jack.
13) Remove transfer to transmission bolts (lower side) (2), and then lower transfer assembly.

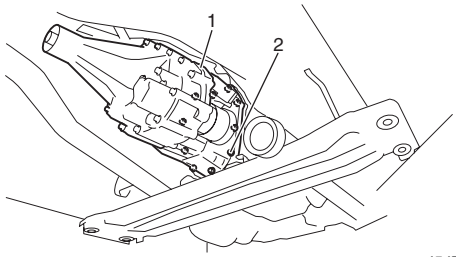


I5JB0A331008-01

### Remounting

Reverse dismounting procedure for remounting noting the following.

- Tighten each bolts and nuts referring to “Transfer Assembly Components: Motor-Shift Type (Transfer with Shift Actuator)”, “Propeller Shaft Construction: in Section 3D”, “Exhaust System Components: in Section 1K”, “Gear Shift Control Lever Rear Case Assembly Components: in Section 5B” and “Transmission Shift Control Lever Removal and Installation: in Section 5B”.
- Set each clamp for wiring securely.
- Fill transfer oil referring to “Transfer Oil Change: Motor-Shift Type (Transfer with Shift Actuator)”.
- Connect battery and check for function.

www.cargeek.ir

www.CarGeek.ir

## Transfer Assembly Components

S5JB0A3316041

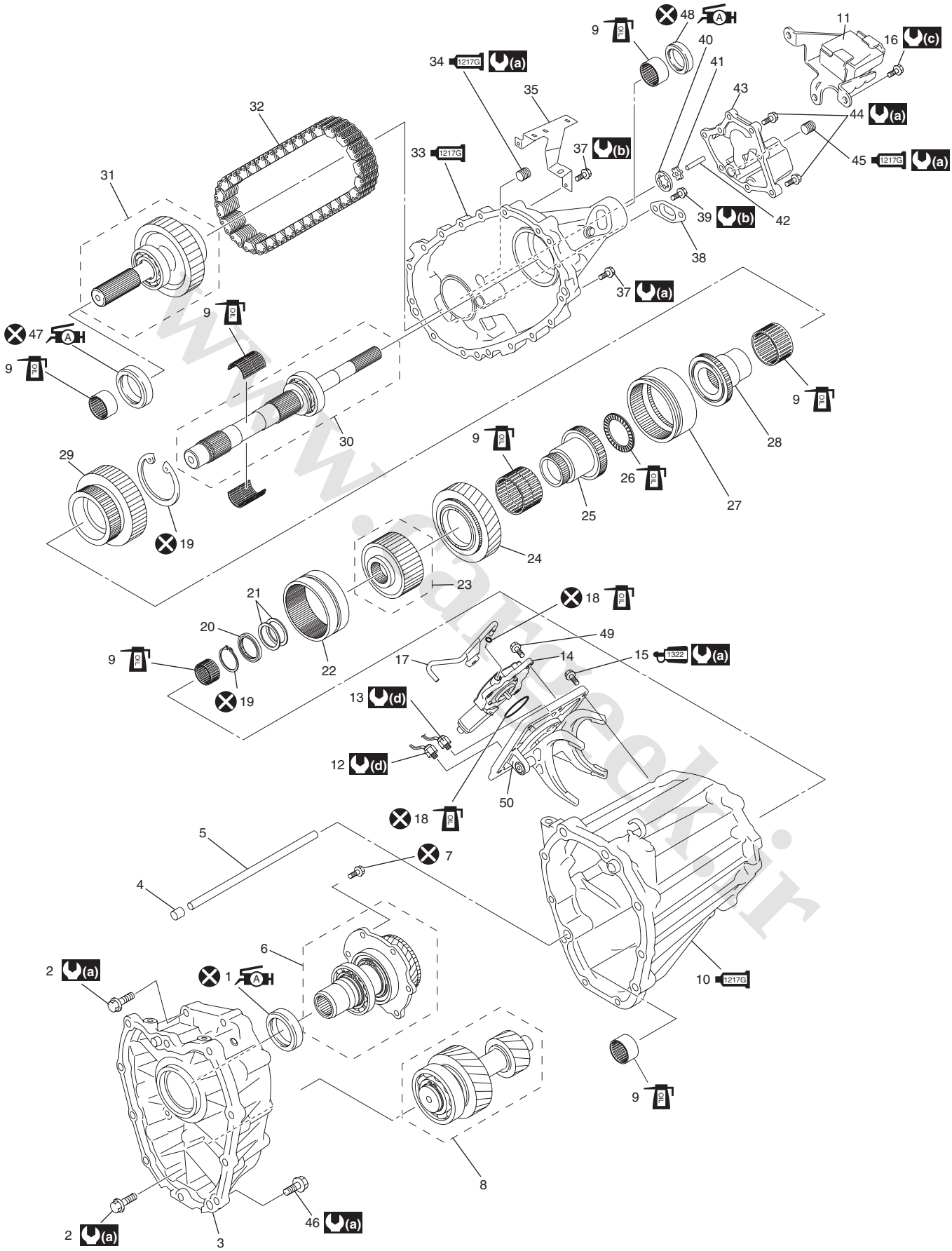


I5JB0A331009-06

www.cargeek.ir

www.CarGeek.ir


| | | |
|---|---|---|
| A 1. Front oil seal No.1<br>: Apply grease 99000-25010 to oil seal lip. | 20. Washer | 39. Oil strainer |
| 2. Front case bolt | 21. Shim | 40. Oil strainer bolt |
| 3. Front case | 22. Reduction shift sleeve | 41. Oil pump outer rotor |
| 4. Knock pin | 23. Center differential assembly | 42. Oil pump inner rotor |
| 5. Oil pipe | 24. Low gear | 43. Oil pump drive pin |
| 6. Input gear assembly | 25. Front drive shaft | 44. Oil pump cover |
| 7. Input gear plate bolt | 26. Thrust needle bearing | 1217G 45. Oil drain plug<br>: Apply sealant 99000-31260 to plug thread. |
| 8. Counter gear assembly | 27. Differential lock clutch sleeve | 46. Transfer to transmission bolt |
| 9. Needle bearing | 28. Front drive sprocket bush | A 47. Front oil seal No.2<br>: Apply grease 99000-25010 to oil seal lip. |
| 1217G 10. Center case<br>: Apply sealant 99000-31260 to mating surface of front case, transfer control cover and center case. | 29. Front drive sprocket | A 48. Rear oil seal<br>: Apply grease 99000-25010 to oil seal lip. |
| 11. Damper | 30. Rear output shaft assembly | 49. Transfer actuator bolt |
| 12. 4L/N switch | 31. Front output shaft assembly | 50. Control cover |
| 13. Center differential lock switch | 32. Drive chain | (a) : 23 N·m (2.3 kgf-m, 17.0 lb-ft) |
| 14. Transfer actuator assembly | 1217G 33. Rear case<br>: Apply sealant 99000-31260 to mating surface of rear case, oil pump cover and center case. | (b) : 10 N·m (1.0 kgf-m, 7.5 lb-ft) |
| 1322 15. Control cover bolt<br>: Apply thread lock 99000-32110 to bolt thread. | 1217G 34. Oil level / filler plug<br>: Apply sealant 99000-31260 to plug thread. | (c) : 50 N·m (5.0 kgf-m, 36.5 lb-ft) |
| 16. Damper bolt | 35. Harness bracket | (d) : 20 N·m (2.0 kgf-m, 14.5 lb-ft) |
| 17. Breather pipe | 36. Harness bracket bolt | ⊗ : Do not reuse. |
| 18. O-ring | 37. Rear case bolt | OIL : Apply transfer oil. |
| 19. Snap ring | 38. Oil strainer | |

## Transfer Assembly Disassembly and Reassembly

S5JB0A3316042

### Disassembly

1) Remove harness bracket (1).

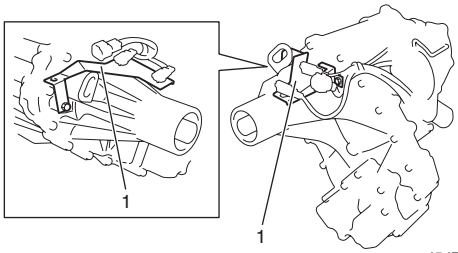


I5JB0A331010-01

2) Remove center differential lock switch (1) and 4L/N switch (2).

3) Remove transfer actuator assembly (3) and breather pipe (4).

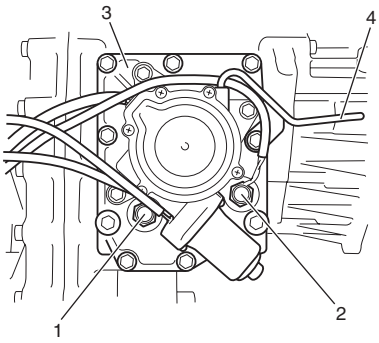


I5JB0A331011-01

4) Remove oil pump cover (1).

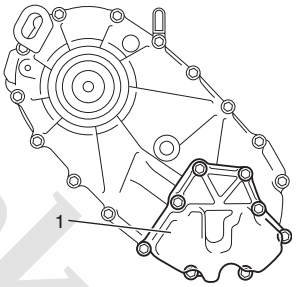


I5JB0A331012-01

5) Remove oil pump inner rotor (1), outer rotor (2), oil strainer (4) and drive pin (3).

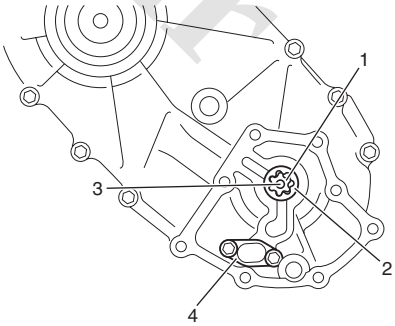


I5JB0A331013-01

www.cargeek.ir

www.CarGeek.ir

6) Remove front case (1) using plastic hammer.

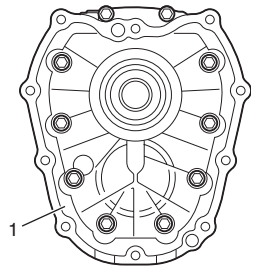


I5JB0A331014-01

7) Remove rear case bolts (1) and clamp (2) and then separate center case (3) using special tool.

**Special tool**
**(A): 09912–34510**

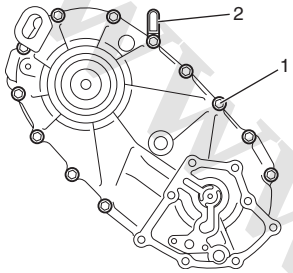


I5JB0A331015-01

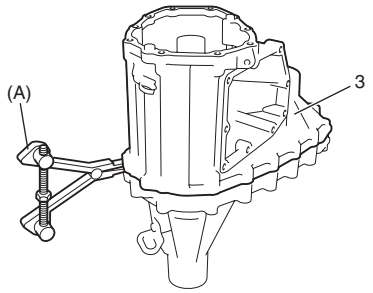


I5JB0A331106-01

8) Remove knock pin (1) and oil pipe (2) from center case (4) and remove front oil seal No.1 (3) using flat end rod or the like, if necessary.

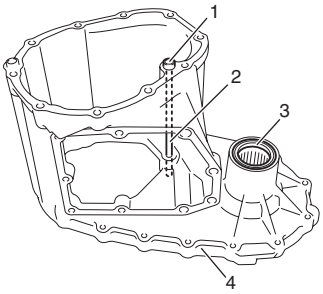


I5JB0A331017-01

9) Remove needle bearings (1) from center case (2) using special tools, if necessary.

**Special tool**
**(A): 09913–76010**
**(B): 09925–98210**

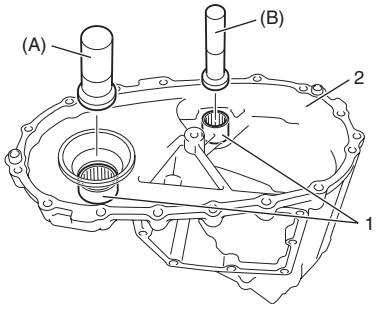


I5JB0A331018-01

10) Remove needle bearing (1), snap ring (2), washer (3) and shim(s) (4) from rear output shaft (5).

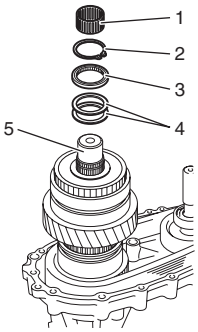


I5JB0A331019-01

11) Remove reduction shift sleeve (1), center differential and low gear from rear output shaft (2).

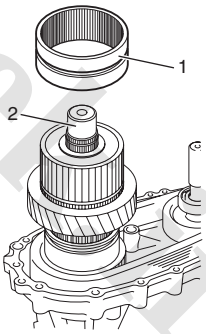


I5JB0A331020-02

www.cargeek.ir

www.CarGeek.ir


12) Remove needle bearings (1), front drive shaft (2) and thrust needle bearing (4) from rear output shaft (3).

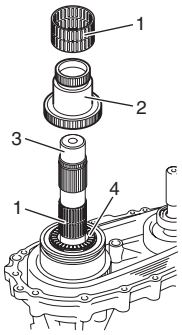


I5JB0A331021-01

13) Remove differential lock clutch sleeve (1) from rear output shaft (2).

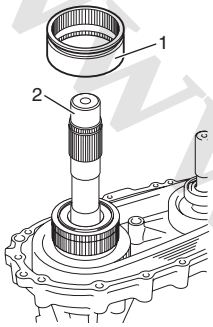


I5JB0A331022-01

14) Remove front drive sprocket bush (1) from rear output shaft (2).

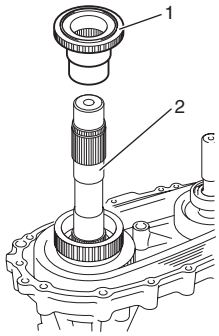


I5JB0A331023-01

15) Take out front drive sprocket (1), front output shaft assembly (2), drive chain (3) and needle bearing (4) from rear case (5) all at once.

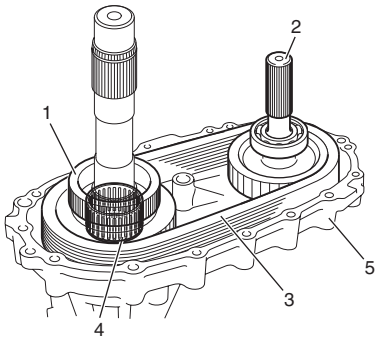


I5JB0A331024-01

16) Remove snap ring (1), and then remove rear output shaft assembly (2) from rear case (3).

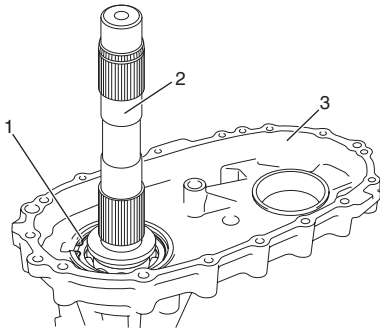


I5JB0A331025-01

17) Remove rear oil seal (1) from rear case (2) using flat end rod or the like, if necessary.

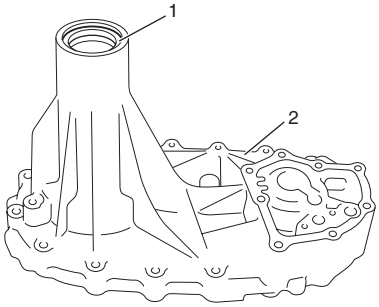


I5JB0A331026-01

18) Remove needle bearing (1) from rear case (2) using special tool, if necessary.

**Special tool**
**(A): 09913–76010**

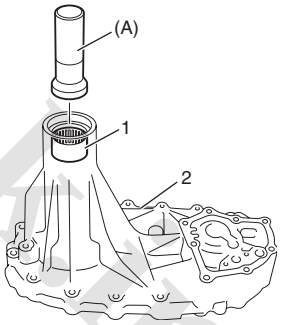


I5JB0A331027-01

19) Remove input gear plate bolts (1) from front case (2).

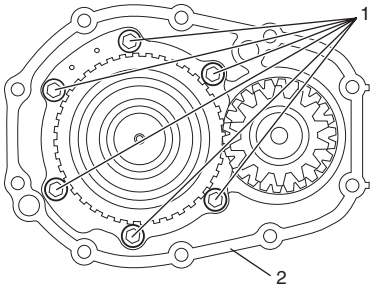


I5JB0A331028-02

www.cargeek.ir

www.CarGeek.ir

20) Remove input gear assembly (1) and counter gear assembly (2) from front case (3) using plastic hammer.

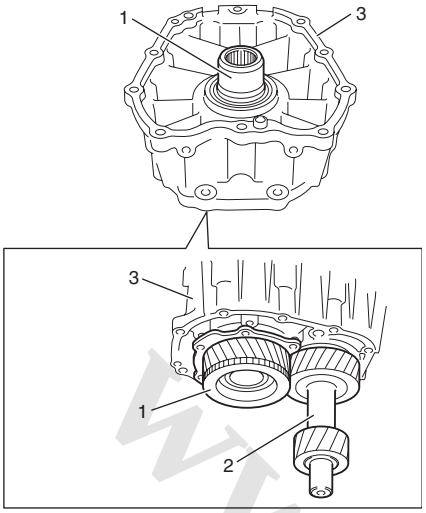


I5JB0A331029-01

21) Remove front oil seal No.2 (1) from front case (2) using flat end rod or the like, if necessary.

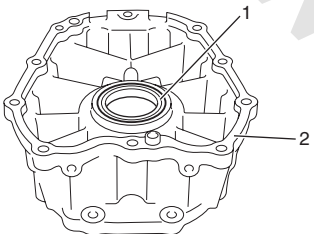


I5JB0A331030-01

**Reassembly**

1) Install new front oil seal No.2 to front case (1) using special tool, and then apply grease to oil seal lip.

**: Grease 99000–25010 (SUZUKI Super Grease A)**

**Special tool**
**(A): 09913–85210**

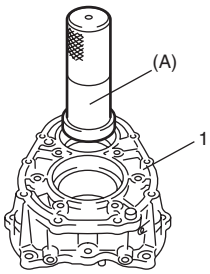


I5JB0A331033-01

2) Install counter gear assembly (1) to front case (2), and then install input gear assembly (3).

**NOTE**

**Install input gear plate (4) so as not to hit counter gear assembly.**

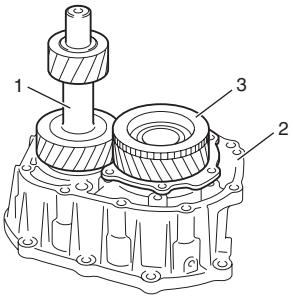


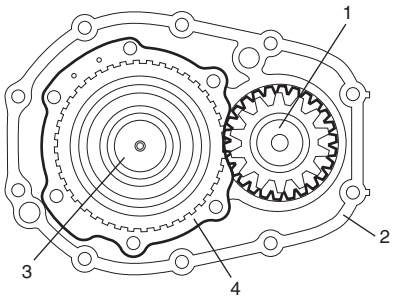


I5JB0A331034-02

3) Tighten new input gear plate bolts (1) to specified torque.

**Tightening torque**
**Input gear plate bolt (a): 23 N·m (2.3 kgf-m, 17.0 lb-ft)**

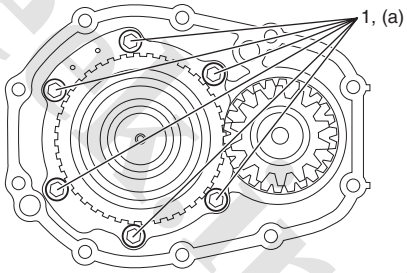


I5JB0A331035-03

www.cargeek.ir

www.CarGeek.ir


4) Install needle bearing (1) to rear case (2) using special tool as shown in figure.

**Distance between case and needle bearing "a"**
**: 0 – 0.5 mm (0 – 0.008 in.)**

**Special tool**
**(A): 09913–76010**

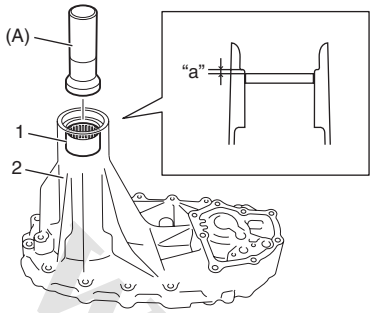


I5JB0A331036-02

5) Install new rear oil seal (1) to rear case (2) using special tool as shown in figure, and then apply grease to oil seal lip.

**"A": Grease 99000–25010 (SUZUKI Super Grease A)**

**Distance between case and oil seal "a"**
**: 3.5 – 4.5 mm (0.138 – 0.177 in.)**

**Special tool**
**(A): 09913–70123**

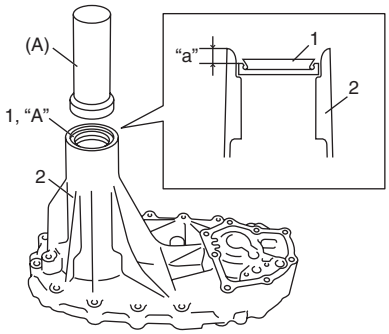


I5JB0A331037-04

6) Install rear output shaft assembly (1) to rear case (2), and then install snap ring (3).

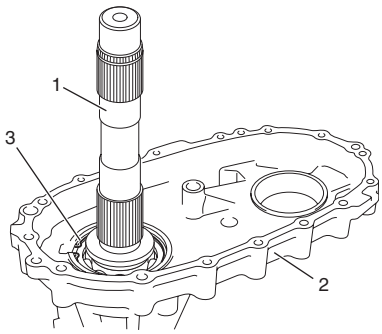


I5JB0A331038-01

7) Install front drive sprocket (1), front output shaft assembly (2), drive chain (3) and needle bearing (4) into rear case (5).

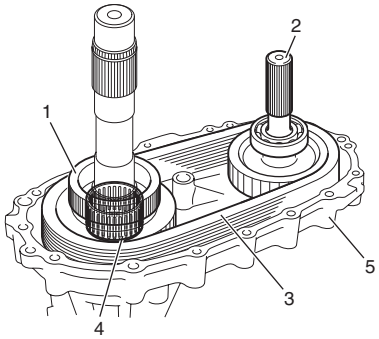


I5JB0A331024-01

8) Install front drive sprocket bush (1) into front drive sprocket (2).

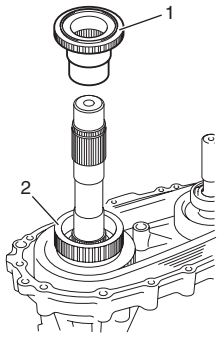


I5JB0A331039-01

9) Install differential lock clutch sleeve (1) to rear output shaft (2) as shown in figure.

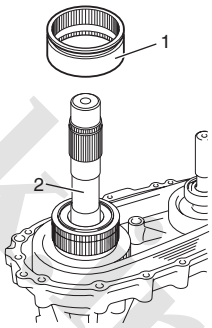


I5JB0A331040-01

10) Install thrust needle bearing (4), front drive shaft (1) and needle bearings (2) to rear output shaft (3).

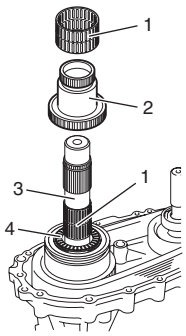


I5JB0A331041-02

www.cargeek.ir

www.CarGeek.ir

11) Install low gear (3), center differential (4) and reduction shift sleeve (1) to rear output shaft (2).

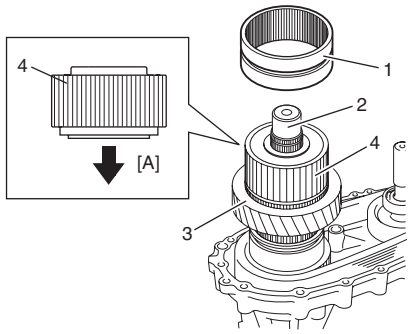


I5JB0A331042-02

[A]: Rear case side

12) Select shim (1) as follows.
   a) Install shim, washer (2) and used snap ring (3) into rear output shaft (4).
   b) Check clearance between shim and washer.
   c) If clearance is out of specified value, select shim from the following table so that clearance become specified value.

**Clearance between shim and washer**
**: 0.1 – 0.3 mm (0.004 – 0.012 in.)**

**Available shim thickness**

| | |
|---|---|
| **0.4 mm (0.016 in.)** | **1.6 mm (0.063 in.)** |
| **0.6 mm (0.024 in.)** | **1.8 mm (0.071 in.)** |
| **0.8 mm (0.031 in.)** | **2.0 mm (0.079 in.)** |
| **1.0 mm (0.039 in.)** | **2.2 mm (0.087 in.)** |
| **1.2 mm (0.047 in.)** | **2.4 mm (0.098 in.)** |
| **1.4 mm (0.055 in.)** | |

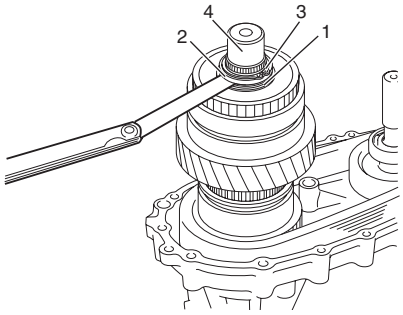


I5JB0A331043-01

13) Remove used snap ring, and then install new snap ring (2) and needle bearing (1) to rear output shaft (3).

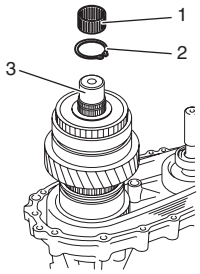


I5JB0A331044-02

14) Install needle bearings (1) to center case (2) using special tools as shown in figure.

**Distance between case and needle bearing "a"**
**: 0 – 0.5 mm (0 – 0.008 in.)**

**Special tool**
**(A): 09913–76010**
**(B): 09925–98210**

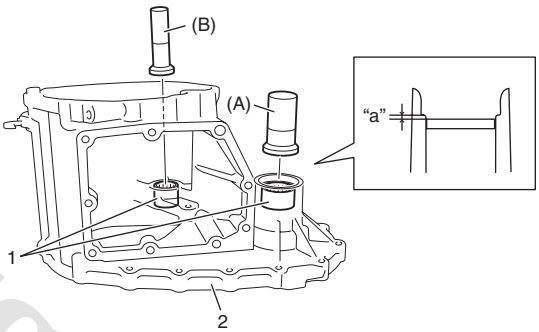


I5JB0A331045-02

www.cargeek.ir

www.CarGeek.ir


15) Install oil pipe (1) and knock pin (2) into center case (3).

16) Install new front oil seal No.1 (4) into center case using special tool as shown in figure, and then apply grease to oil seal lip.

**Distance between case and oil seal "a"**
**: 3.5 – 4.5 mm (0.138 – 0.177 in.)**

**"A": Grease 99000–25010 (SUZUKI Super Grease A)**

**Special tool**
**(A): 09913–70123**

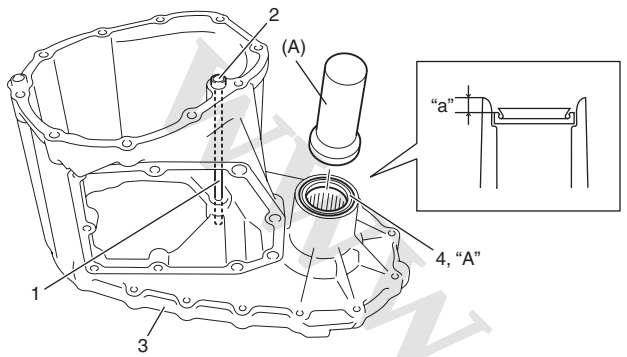

I5JB0A331046-03

17) Clean mating surface of both center case and rear case (1), apply sealant to rear case as shown in figure by such amount that its section is 1.2 mm (0.047 in.) in diameter, mate center case with rear case and then tighten bolts (2) to specified torque.

**"A": Sealant 99000–31260 (SUZUKI Bond No.1217G)**

**Tightening torque**
**Rear case bolt (a): 23 N·m (2.3 kgf-m, 17.0 lb-ft)**

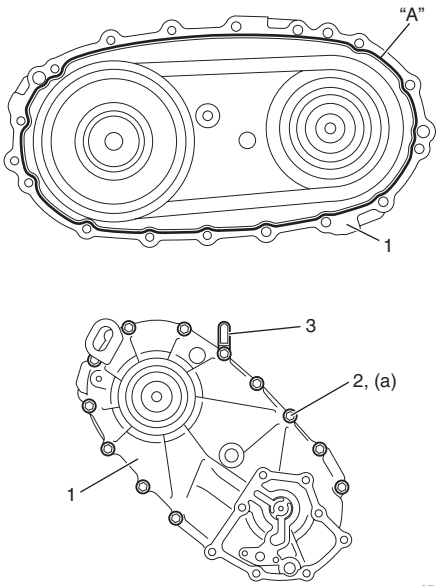

I5JB0A331047-02

| |
|---|
| 3. Clamp |

18) Clean mating surface of both center case (1) and front case, apply sealant to center case as shown in figure by such amount that its section is 1.2 mm (0.047 in.) in diameter, mate front case (3) with center case and then tighten bolts (2) to specified torque.

**"A": Sealant 99000–31260 (SUZUKI Bond No.1217G)**

**Tightening torque**
**Rear case bolt (a): 23 N·m (2.3 kgf-m, 17.0 lb-ft)**

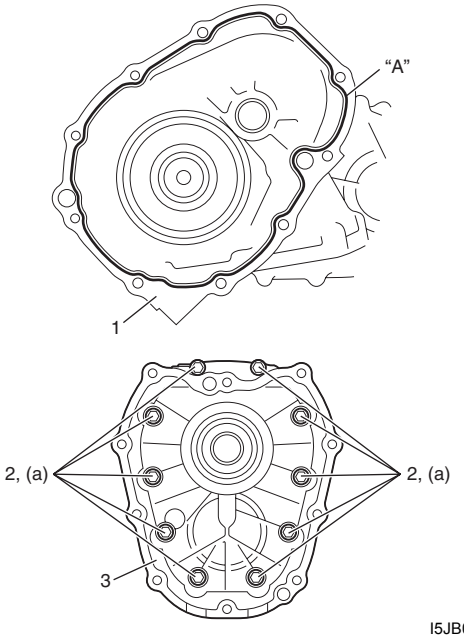

I5JB0A331048-03

19) Install oil strainer (1) to rear case (2).

**Tightening torque**
**Strainer bolt (a): 10 N·m (1.0 kgf-m, 7.5 lb-ft)**

20) Install oil pump inner rotor (3), outer rotor (4) and drive pin (5) to rear case (6).

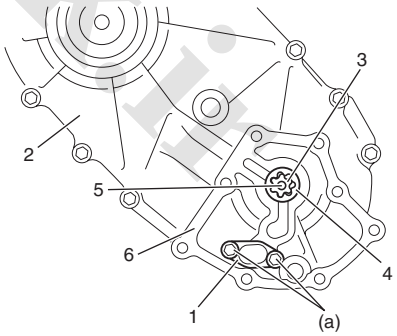

I5JB0A331050-01

www.cargeek.ir

www.CarGeek.ir

21) Clean mating surface of oil pump cover (1) and rear case (2), apply sealant to rear case as shown in figure by such amount that its section is 1.2 mm (0.047 in.) in diameter, mate oil pump cover with rear case and then tighten bolts (3) to specified torque.

**"A": Sealant 99000–31260 (SUZUKI Bond No.1217G)**

**Tightening torque**
**Oil pump cover bolt (a): 23 N·m (2.3 kgf-m, 17.0 lb-ft)**

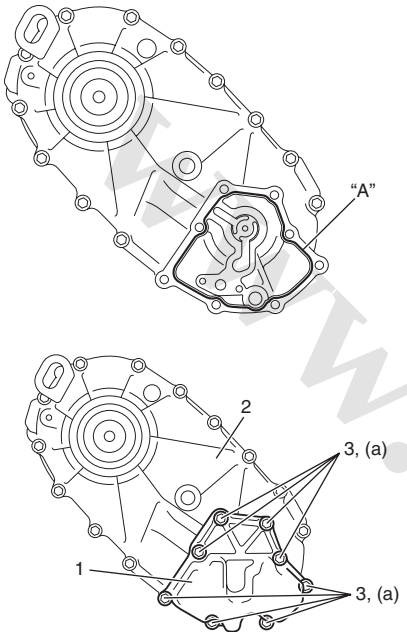

I5JB0A331049-02

22) Clean mating surface of control cover (1) and center case (2), apply sealant to center case as shown in figure by such amount that its section is 1.2 mm (0.047 in.) in diameter, confirm the each fork of control cover is in groove of the sleeve, mate control cover with center case and then tighten control cover bolts (3) to which thread lock cement has been applied and control cover dowel bolts (4) to specified torque.

**"A": Sealant 99000–31260 (SUZUKI Bond No.1217G)**
**"B": Thread lock cement 99000–32110 (Thread Lock Cement Super 1322)**

**Tightening torque**
**Control cover bolt (a): 23 N·m (2.3 kgf-m, 17.0 lb-ft)**
**Control cover dowel bolt (b): 23 N·m (2.3 kgf-m, 17.0 lb-ft)**

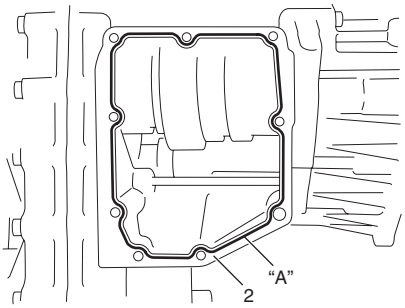


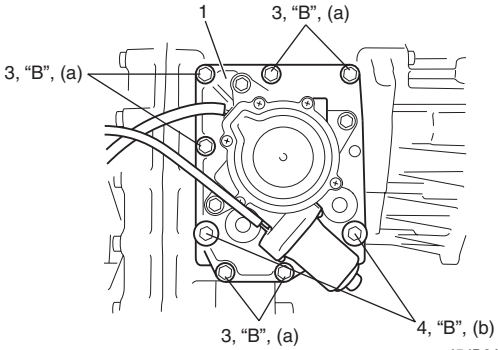

I5JB0A331051-04

23) Install center differential lock switch (1), 4L/N switch (2) and breather pipe (3).

**Tightening torque**
**Center differential lock switch (a): 20 N·m (2.0 kgf-m, 14.5 lb-ft)**
**4L/N switch (b): 20 N·m (2.0 kgf-m, 14.5 lb-ft)**

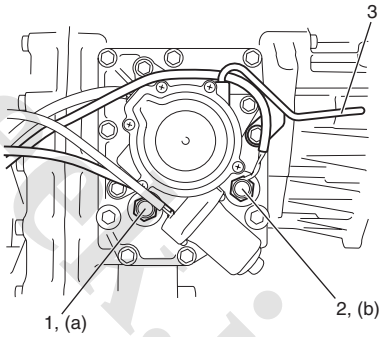

I5JB0A331052-02

24) Install harness bracket (1).

**Tightening torque**
**Harness bracket bolt (a): 10 N·m (1.0 kgf-m, 7.5 lb-ft)**

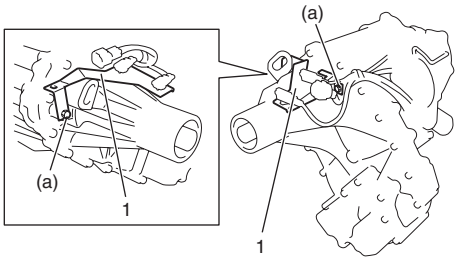

I5JB0A331053-01

www.cargeek.ir

www.CarGeek.ir


## Transfer Assembly Inspection

S5JB0A3316043

- Check needle bearing and bearing contacting surface for damage. Replace as required.
- Check gear tooth surface and shift mechanism in the same manner as with transmission. Correct or replace as necessary.
- Check drive chain and sprockets for abnormal wear or damage. Replace as required.
- Check transfer control cover assembly for abnormal wear or damage. Replace control cover assembly.
- Assemble input gear assembly (1), center differential assembly (2), low gear (3) and reduction shift sleeve (4), check whether reduction shift sleeve moves smoothly, and replace it if defect is found.

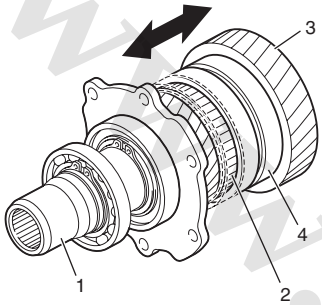


I5JB0A331054-01

- Measure the width of groove part of reduction shift sleeve (1).
  If measured value is out of specification, replace reduction sleeve.

  **Reduction shift sleeve groove width**
  **: 6.9 – 7.1 mm (0.272 – 0.280 in.)**

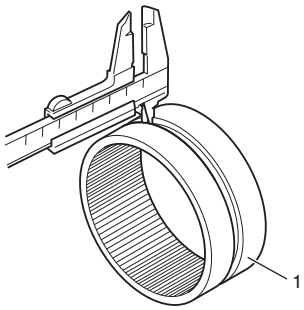


I5JB0A331055-01

- Assemble front drive shaft (1), front drive sprocket (2) and differential lock clutch sleeve (3), check whether differential lock clutch sleeve moves smoothly, and replace it if defect is found.

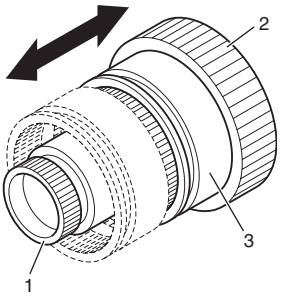


I5JB0A331056-01

- Measure the width of groove part of differential lock clutch sleeve (1).
  If measured value is out of specification, replace reduction sleeve.

  **Differential lock clutch sleeve groove width**
  **: 6.9 – 7.1 mm (0.272 – 0.280 in.)**

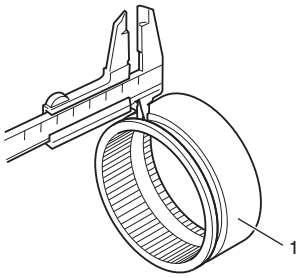


I5JB0A331057-01

- Measure thickness of shift fork. If thickness of shift fork is out of specification, replace control cover assembly.

  **Shift fork thickness**
  **: 6.5 – 6.8 mm (0.256 – 0.268 in.)**

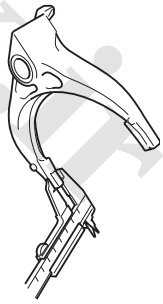

I5JB0A331082-01

www.cargeek.ir

www.CarGeek.ir

- Check 4L/N switch and center differential lock switch for continuity between “a” and “b” terminals of switch. If check result is not as specified below, replace switch.

  **4L/N switch and center differential lock switch specification**
  **Switch button (1) released: Continuity**
  **Switch button (1) kept pushing: No continuity**

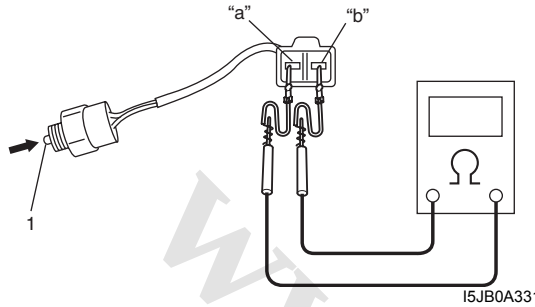

I5JB0A331058-01

- Connect terminal “1” of transfer actuator (3) to the positive of battery (4) and terminal “2” to the negative, and confirm cam (2) rotates in the direction of A. At the same time, connect terminal “2” of transfer actuator (3) to the positive and terminal “1” to the negative, and confirm it rotates in the direction of B. If it doesn’t operate correctly, replace transfer actuator assembly.

**NOTE**

- **Do not rotate transfer actuator applying voltage, while transfer actuator removed from transfer control cover assembly (1).**
- **Do not apply voltage of the battery in the direction of rotation limit at rotation limit position of transfer actuator.**

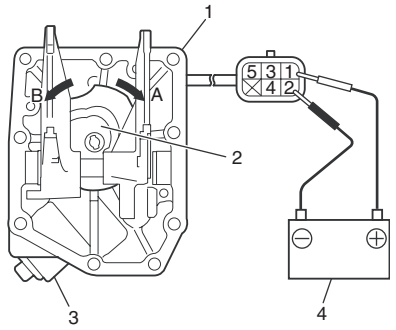

I5JB0A331059-01

- Operate the motor, and measure the resistance between following terminals of transfer actuator when matching transfer actuator (1) to 4H-lock position and 4L-lock position.
  If measured value is out of specification, replace transfer actuator.

**Transfer actuator resistance**

| Transfer position | Terminal | Resistance |
|---|---|---|
| 4H-lock | 4 – 5 | 385 – 400 Ω |
| 4L-lock | 3 – 4 | |

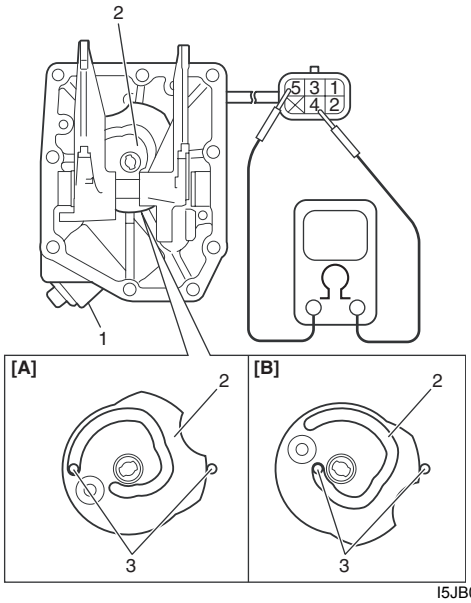

I5JB0A331060-02

| | |
|---|---|
| [A]: | 4H-lock position |
| [B]: | 4L-lock position |
| 2. | Cam |
| 3. | Shift fork pin |

www.cargeek.ir

www.CarGeek.ir


## Input Gear Assembly, Counter Gear Assembly, Front Output Shaft Assembly and Rear Output Shaft Assembly Components

S5JB0A3316044

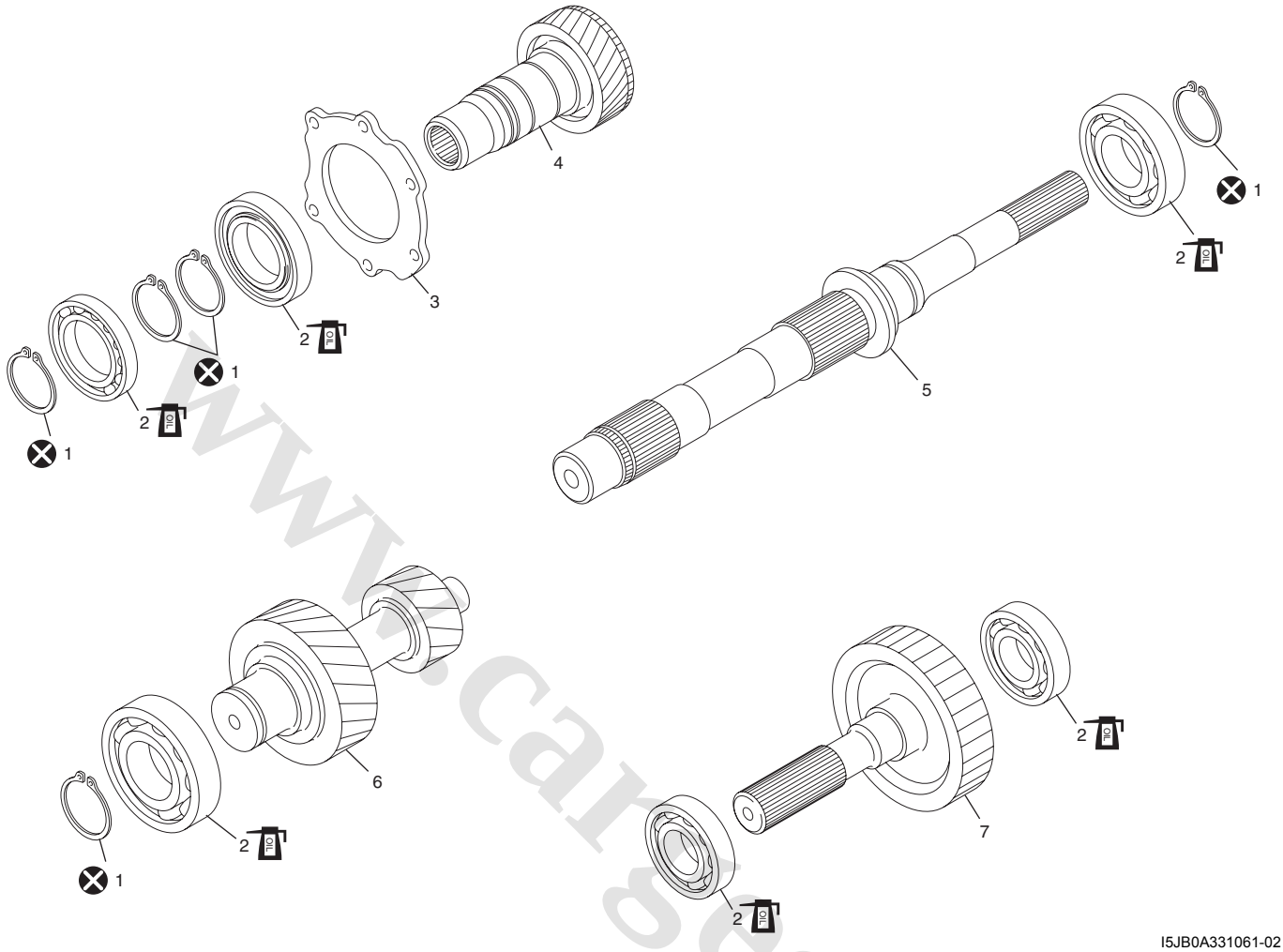


I5JB0A331061-02

| | |
|---|---|
| 1. Snap ring | 6. Counter gear |
| 2. Bearing | 7. Front output shaft |
| 3. Input gear plate | ⊗ : Do not reuse. |
| 4. Input gear | OIL : Apply transfer oil. |
| 5. Rear output shaft | |

www.cargeek.ir

www.CarGeek.ir

## Input Gear Assembly Disassembly and Reassembly

S5JB0A3316045

### Disassembly

1) Remove snap ring (1) from input gear, and then remove bearing (2).

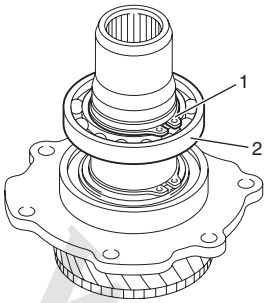


I5JB0A331062-01

2) Remove snap rings (1).

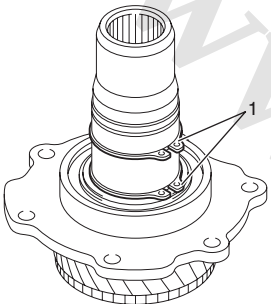


I5JB0A331063-01

3) Remove bearing (1) from input gear (2) using bearing puller (3) and press (4), and then remove input gear plate.

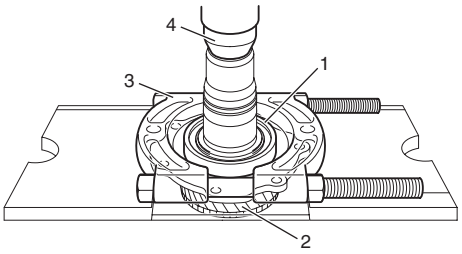


I5JB0A331064-01

### Reassembly

1) Clean all components thoroughly, inspect them for any abnormality and replace with new ones as necessary.

2) Install input gear plate (1), and then press-fit bearing (2) using special tool, bearing puller (3) and press (4).

**NOTE**

**Assemble bearing so that seal side (5) may come to the front side.**

**Special tool**
**(A): 09913–85210**

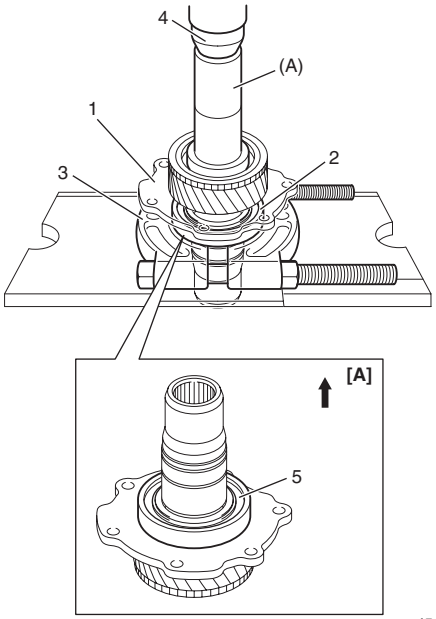


I5JB0A331065-02

| | |
|---|---|
| [A]: | Front side |

3) Install snap rings (1) to input gear (2).

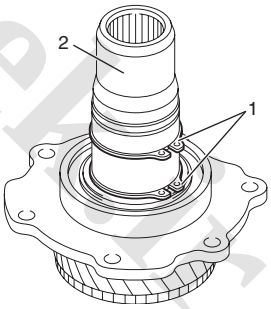


I5JB0A331066-01

4) Install bearing (1) and snap ring (2).

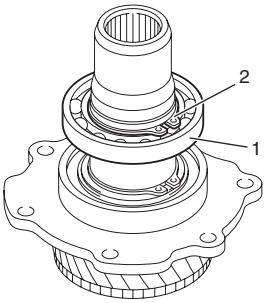


I5JB0A331067-01

www.cargeek.ir

www.CarGeek.ir


## Counter Gear Assembly Disassembly and Reassembly

S5JB0A3316046

### Disassembly

1) Remove snap ring (1) from counter gear (2).

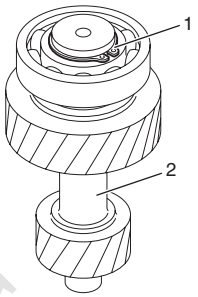


I5JB0A331068-01

2) Remove bearing (1) from counter gear (2) using special tool, bearing puller (3) and press (4).

**Special tool**
**(A): 09913–80113**

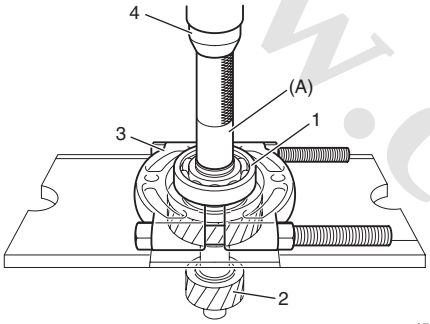


I5JB0A331069-02

### Reassembly

1) Clean all components thoroughly, inspect them for any abnormality and replace with new ones as necessary.
2) Press-fit bearing (1) to counter gear using special tool and press.

**Special tool**
**(A): 09913–70123**

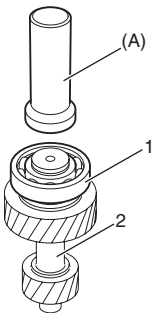


I5JB0A331070-01

3) Install snap ring (1) to counter gear (2).

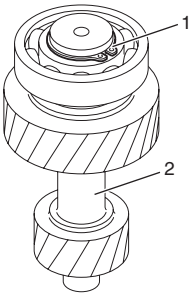


I5JB0A331068-01

## Front Output Shaft Assembly Disassembly and Reassembly

S5JB0A3316047

### Disassembly

1) Remove bearing (1) from front output shaft (2) using special tool, bearing puller (3) and press (4).

**Special tool**
**(A): 09925–98221**

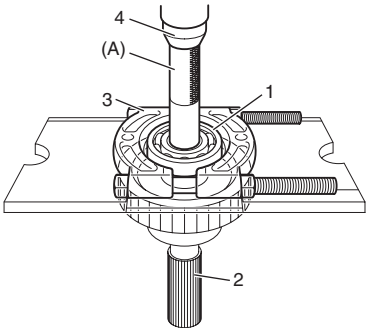


I5JB0A331071-01

2) Remove bearing (1) from front output shaft (2) using bearing puller (3) and press (4).

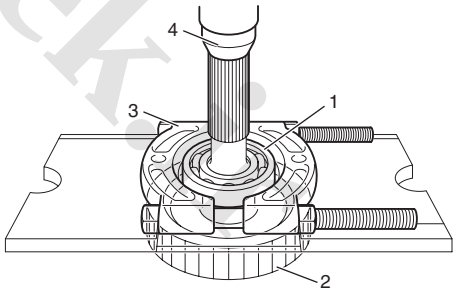


I5JB0A331072-01

www.cargeek.ir

www.CarGeek.ir

### Reassembly

1) Clean all components thoroughly, inspect them for any abnormality and replace with new ones as necessary.
2) Press-fit bearing (1) to front output shaft using special tool and press.

**Special tool**
**(A): 09913–84510**

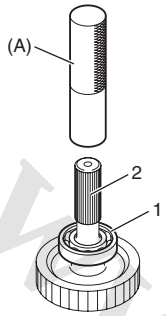


I5JB0A331073-01

3) Press-fit bearing (1) to front output shaft using special tool and press.

**Special tool**
**(A): 09913–76010**

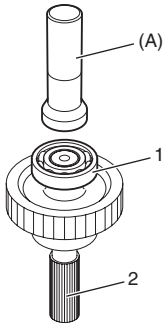


I5JB0A331074-01

## Rear Output Shaft Assembly Disassembly and Reassembly

S5JB0A3316048

### Disassembly

1) Remove snap ring (1) from rear output shaft (2).

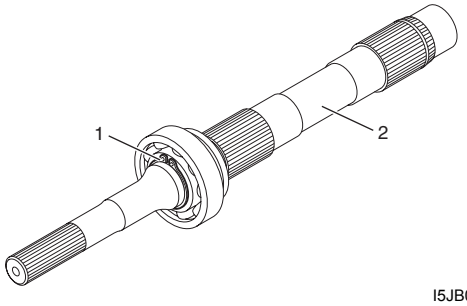


I5JB0A331075-01

2) Remove bearing (1) from rear output shaft (2) using bearing puller (3) and press (4).

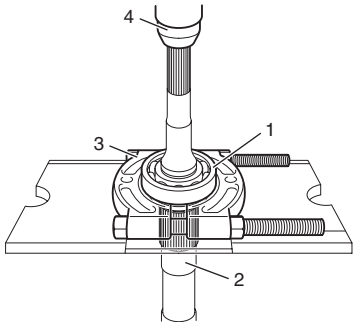


I5JB0A331076-01

### Reassembly

1) Clean all components thoroughly, inspect them for any abnormality and replace with new ones as necessary.
2) To ensure lubrication of rear output shaft (1), air blow oil holes (2) and make sure that they are free from any obstruction.

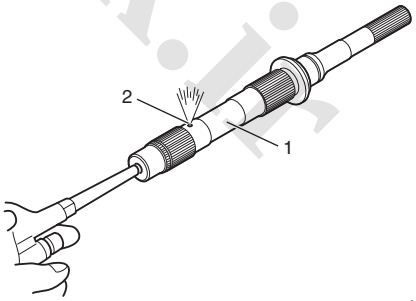


I5JB0A331077-01

www.cargeek.ir

www.CarGeek.ir


3) Press-fit bearing (1) to rear output shaft using special tools and press.

**Special tool**
**(A): 09913–85210**
**(B): 09940–54910**

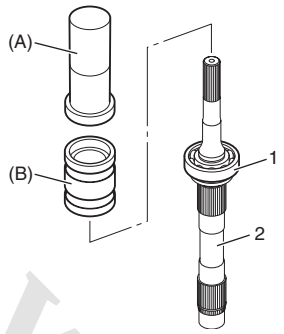


I5JB0A331078-01

4) Install snap ring (1) to rear output shaft (2).

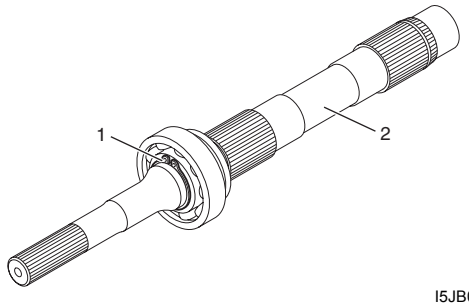


I5JB0A331075-01

# Specifications

## Tightening Torque Specifications

S5JB0A3317001

| Fastening part | Tightening torque | | | Note |
|---|---|---|---|---|
| | N·m | kgf-m | lb-ft | |
| Transfer oil drain plug | 23 | 2.3 | 17.0 | ☞ |
| Transfer oil level / filler plug | 23 | 2.3 | 17.0 | ☞ |
| Input gear plate bolt | 23 | 2.3 | 17.0 | ☞ |
| Rear case bolt | 23 | 2.3 | 17.0 | ☞ / ☞ |
| Strainer bolt | 10 | 1.0 | 7.5 | ☞ |
| Oil pump cover bolt | 23 | 2.3 | 17.0 | ☞ |
| Control cover bolt | 23 | 2.3 | 17.0 | ☞ |
| Control cover dowel bolt | 23 | 2.3 | 17.0 | ☞ |
| Center differential lock switch | 20 | 2.0 | 14.5 | ☞ |
| 4L/N switch | 20 | 2.0 | 14.5 | ☞ |
| Harness bracket bolt | 10 | 1.0 | 7.5 | ☞ |

**NOTE**

**The specified tightening torque is also described in the following.**
**“Transfer Assembly Components: Motor-Shift Type (Transfer with Shift Actuator)”**

**Reference:**
For the tightening torque of fastener not specified in this section, refer to “Fastener Information: in Section 0A”.

# Special Tools and Equipment

## Recommended Service Material

S5JB0A3318001

| Material | SUZUKI recommended product or Specification | | Note |
|---|---|---|---|
| Grease | SUZUKI Super Grease A | P/No.: 99000–25010 | ☞ / ☞ / ☞ / ☞ |
| Sealant | SUZUKI Bond No.1217G | P/No.: 99000–31260 | ☞ / ☞ / ☞ / ☞ / ☞ / ☞ |
| Thread lock cement | Thread Lock Cement Super 1322 | P/No.: 99000–32110 | ☞ |

www.cargeek.ir

www.CarGeek.ir

**NOTE**

**Required service material is also described in the following.**
**“Transfer Assembly Components: Motor-Shift Type (Transfer with Shift Actuator)”**
**“Input Gear Assembly, Counter Gear Assembly, Front Output Shaft Assembly and Rear Output Shaft Assembly Components: Motor-Shift Type (Transfer with Shift Actuator)”**

## Special Tool

S5JB0A3318002

| | |
|---|---|
| 09912–34510<br>Case separator<br>☞ 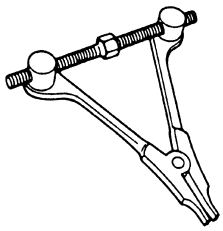 | 09913–70123<br>Bearing installing tool<br>☞ / ☞ / ☞ / ☞ 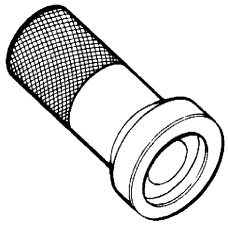 |
| 09913–76010<br>Bearing installer<br>☞ / ☞ / ☞ / ☞ / ☞ 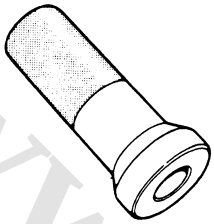 | 09913–80113<br>Bearing installer<br>☞ |
| 09913–84510<br>Bearing installer<br>☞ 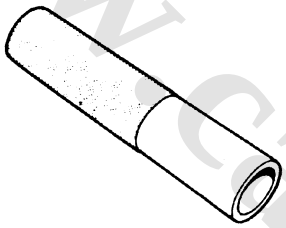 | 09913–85210<br>Bearing installer<br>☞ / ☞ / ☞ 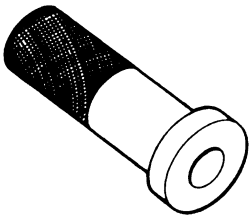 |
| 09925–98210<br>Input shaft bearing installer<br>☞ / ☞ 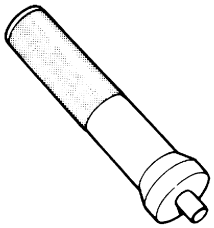 | 09925–98221<br>Bearing installer<br>☞ 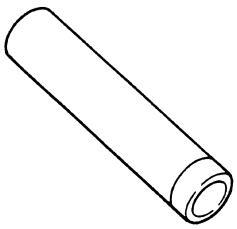 |
| 09928–36510<br>Transfer cap<br>☞ 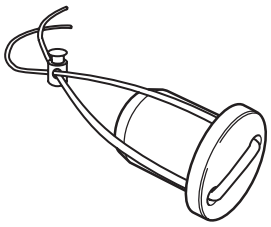 | 09940–54910<br>Front fork oil seal install driver<br>☞ 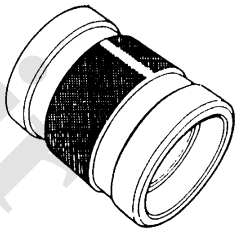 |
| SUZUKI scan tool<br>—<br>This kit includes following items. 1. Tech 2, 2. PCMCIA card, 3. DLC cable, 4. SAE 16/19 adapter, 5. Cigarette cable, 6. DLC loopback adapter, 7. Battery power cable, 8. RS232 cable, 9. RS232 adapter, 10. RS232 loop back connector, 11. Storage case, 12. Power supply ☞ / ☞ 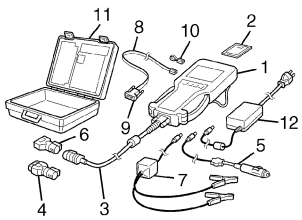  | |

www.cargeek.ir

www.CarGeek.ir


# Non-Shift Type (Transfer without Shift Actuator)

## Precautions

### Transfer Warning

S5JB0A3320001

Refer to “Transfer Warning: Motor-Shift Type (Transfer with Shift Actuator)”.

## General Description

### Transfer Construction

S5JB0A3321001

The aluminum transfer case directly connected to the back of the transmission contains the input gear, rear output shaft, front output shaft and drive chain.
The transfer has an oil pump to provide proper lubrication even under the strict condition of use.
The center differential is installed in the transfer. With the torque induction type LSD used in the center differential, the effect of LSD works when a rotation difference between front and rear wheels.
The differential lock lever is installed in shaft case. Center differential can be locked by operating differential lock lever, if necessary.

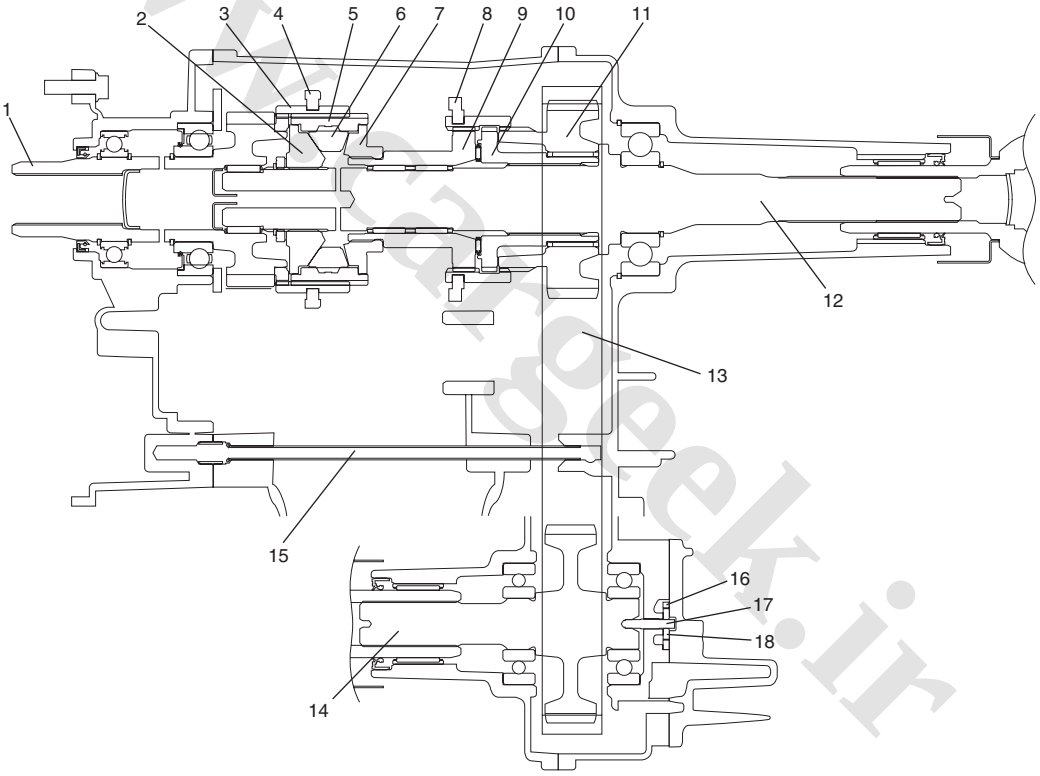


I5JB0A331083-02

| | | |
|---|---|---|
| 1. Input gear | 7. Front drive cam | 13. Drive chain |
| 2. Rear drive cam | 8. Differential lock shift fork | 14. Front output shaft |
| 3. Reduction shift sleeve | 9. Front drive shaft | 15. Oil pipe |
| 4. Reduction shift fork | 10. Front drive sprocket bush | 16. Oil pomp outer rotor |
| 5. Center differential case | 11. Front drive sprocket | 17. Oil pump drive pin |
| 6. Center differential cam follower | 12. Rear output shaft | 18. Oil pump inner rotor |

www.cargeek.ir

www.CarGeek.ir

# Diagnostic Information and Procedures

## Transfer Symptom Diagnosis

S5JB0A3324001

Before attempting to repair the transfer or related components for any reason other than mechanical failure, the condition and possible causes should be identified.
When any of these conditions occur, the following inspections should be made before disassembling the transfer.

- Check transfer for oil level and oil deterioration.
  Refer to “Transfer Oil Change: Non-Shift Type (Transfer without Shift Actuator)”.

After performing the above inspections, refer to the following diagnosis table.

| Condition | Possible cause | Correction / Reference Item |
|---|---|---|
| ***Gear slipping out of mesh*** | Worn control cover shift shaft | *Replace referring to “Transfer Assembly Inspection: Motor-Shift Type (Transfer with Shift Actuator)”.* |
| | Worn shift fork or sleeve | *Replace referring to “Transfer Assembly Inspection: Motor-Shift Type (Transfer with Shift Actuator)”.* |
| | Weak or damaged control cover shift shaft spring | *Replace referring to “Transfer Assembly Inspection: Motor-Shift Type (Transfer with Shift Actuator)”.* |
| | Worn bearings on input gear or counter gear | *Replace referring to “Transfer Assembly Inspection: Motor-Shift Type (Transfer with Shift Actuator)”.* |
| | Worn chamfered tooth on sleeve or gear | *Replace sleeve and gear referring to “Transfer Assembly Inspection: Motor-Shift Type (Transfer with Shift Actuator)”.* |
| | Missing or disengagement of circlip(s) | *Repair or replace referring to “Transfer Assembly Inspection: Motor-Shift Type (Transfer with Shift Actuator)”.* |
| ***Noise*** | Inadequate or insufficient transfer oil | *Replenish referring to “Transfer Oil Change: Non-Shift Type (Transfer without Shift Actuator)”.* |
| | Damaged or worn bearing(s) | *Replace referring to “Transfer Assembly Inspection: Motor-Shift Type (Transfer with Shift Actuator)”.* |
| | Damaged or worn gear(s) | *Replace referring to “Transfer Assembly Inspection: Motor-Shift Type (Transfer with Shift Actuator)”.* |
| | Damaged or worn chamfered tooth on sleeve or gear | *Replace referring to “Transfer Assembly Inspection: Motor-Shift Type (Transfer with Shift Actuator)”.* |

www.cargeek.ir

www.CarGeek.ir


# Repair Instructions

## Transfer Oil Change

S5JB0A3326002

Refer to “Transfer Oil Change: Motor-Shift Type (Transfer with Shift Actuator)”.

## Transfer Oil Level Check

S5JB0A3326003

Refer to “Transfer Oil Level Check: Motor-Shift Type (Transfer with Shift Actuator)”.

## Transfer Oil Seal Removal and Installation

S5JB0A3326004

Refer to “Transfer Oil Seal Removal and Installation: Motor-Shift Type (Transfer with Shift Actuator)”.

## Transfer Assembly Dismounting and Remounting

S5JB0A3326005

Refer to “Transfer Assembly Dismounting and Remounting: Motor-Shift Type (Transfer with Shift Actuator)”.

www.cargeek.ir

www.cargeek.ir

www.CarGeek.ir

## Transfer Assembly Components

S5JB0A3326006

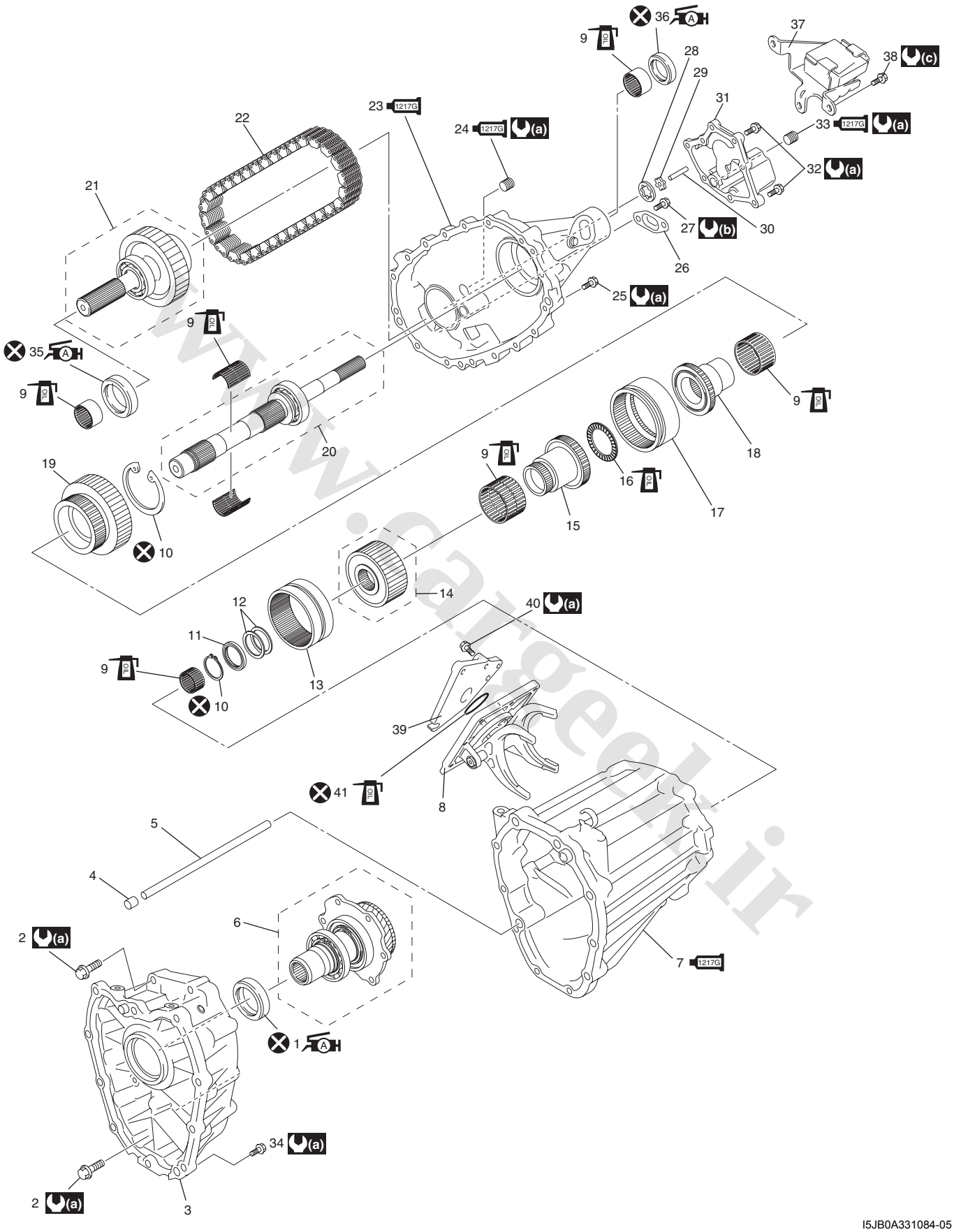


I5JB0A331084-05

www.cargeek.ir

www.CarGeek.ir


| | | |
|---|---|---|
| 1. Front oil seal No.1<br>: Apply grease 99000-25010 to oil seal lip. | 17. Differential lock clutch sleeve | 1217G 33. Oil drain plug<br>: Apply sealant 99000-31260 to plug thread. |
| 2. Front case bolt | 18. Front drive sprocket bush | 34. Transfer to transmission bolt |
| 3. Front case | 19. Front drive sprocket | 35. Front oil seal No.2<br>: Apply grease 99000-25010 to oil seal lip. |
| 4. Knock pin | 20. Rear output shaft assembly | 36. Rear oil seal<br>: Apply grease 99000-25010 to oil seal lip. |
| 5. Oil pipe | 21. Front output shaft assembly | 37. Damper |
| 6. Input gear assembly | 22. Drive chain | 38. Damper bolt |
| 1217G 7. Center case<br>: Apply sealant 99000-31260 to mating surface of front case, differential lock shift lever case and center case. | 1217G 23. Rear case<br>: Apply sealant 99000-31260 to mating surface of transfer rear case, oil pump cover and transfer center case. | 39. Shift case |
| 8. Differential lock shift lever case | 1217G 24. Oil level / filler plug<br>: Apply sealant 99000-31260 to plug thread. | 40. Shift lever case bolt |
| 9. Needle bearing | 25. Rear case bolt | 41. O-ring |
| 10. Snap ring | 26. Oil strainer | (a) : 23 N·m (2.3 kgf-m, 17.0 lb-ft) |
| 11. Washer | 27. Oil strainer bolt | (b) : 10 N·m (1.0 kgf-m, 7.5 lb-ft) |
| 12. Shim | 28. Oil pump outer rotor | (c) : 50 N·m (5.0 kgf-m, 36.5 lb-ft) |
| 13. Reduction shift sleeve | 29. Oil pump inner rotor | : Do not reuse. |
| 14. Center differential assembly | 30. Oil pump drive pin | : Apply transfer oil. |
| 15. Front drive shaft | 31. Oil pump cover | |
| 16. Thrust bearing | 32. Oil pump cover bolt | |

www.cargeek.ir
www.cargeek.ir

www.CarGeek.ir

## Transfer Assembly Disassembly and Reassembly

S5JB0A3326007

### Disassembly

1) Remove differential lock shift lever case (1).

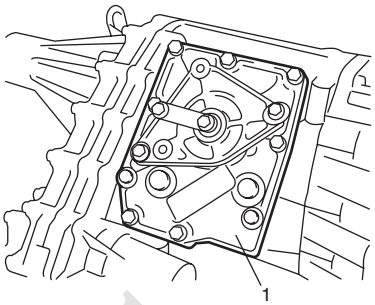


I5JB0A331085-01

2) Remove oil pump cover (1).

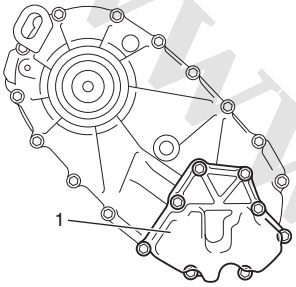


I5JB0A331086-01

3) Remove oil pump inner rotor (1), outer rotor (2), oil strainer (4) and drive pin (3).

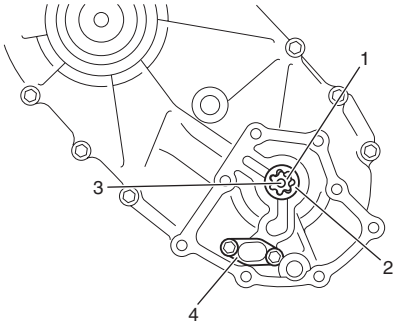


I5JB0A331013-01

4) Remove front case (1).

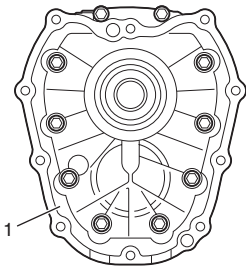


I5JB0A331014-01

5) Remove rear case bolts (1), and then separate center case (2) using special tool.

**Special tool**
**(A): 09912–34510**

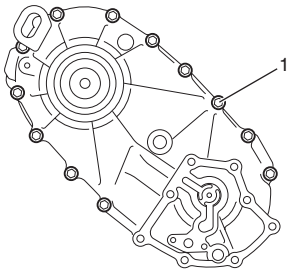


I5JB0A331087-01

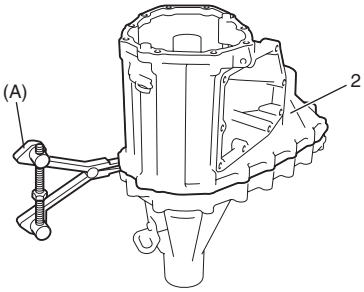


I5JB0A331016-02

6) Remove knock pin (1) and oil pipe (2) from center case (4) and remove front oil seal No.1 (3) using flat end rod or the like, if necessary.

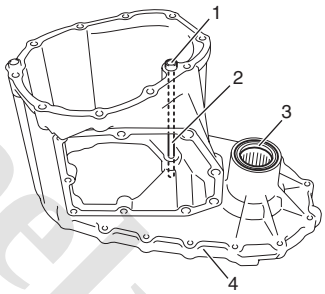


I5JB0A331017-01

7) Remove needle bearing (1) from center case (2) using special tool, if necessary.

**Special tool**
**(A): 09913–76010**

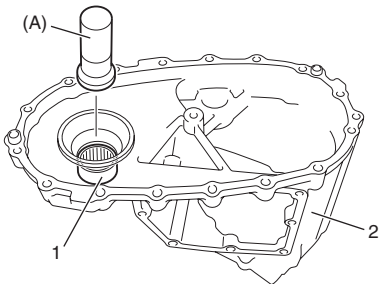


I5JB0A331088-01

www.cargeek.ir

www.CarGeek.ir


8) Remove needle bearing (1), snap ring (2), washer (3) and shim(s) (4) from rear output shaft (5).

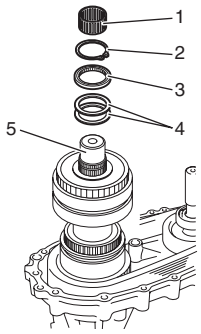


I5JB0A331089-01

9) Remove reduction shift sleeve (1) and center differential (3) from rear output shaft (2).

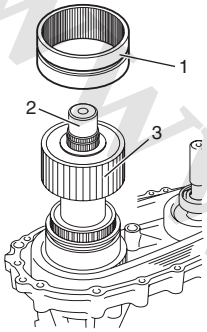


I5JB0A331090-02

10) Remove needle bearings (1), front drive shaft (2) and thrust needle bearing (4) from rear output shaft (3).

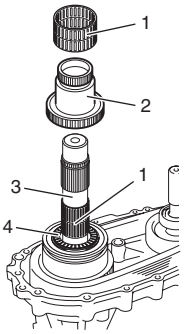


I5JB0A331041-02

11) Remove differential lock clutch sleeve (1) from rear output shaft (2).

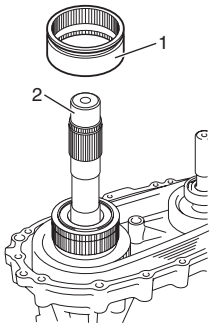


I5JB0A331022-01

12) Remove front drive sprocket bush (1) from rear output shaft (2).

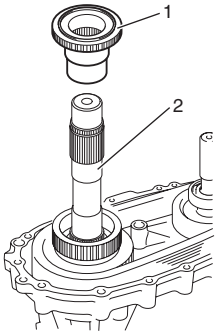


I5JB0A331023-01

13) Take out front drive sprocket (1), front output shaft assembly (2), drive chain (3) and needle bearing (4) from rear case (5) all at once.

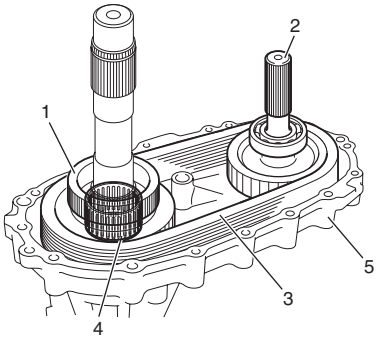


I5JB0A331024-01

14) Remove snap ring (1), and then rear output shaft assembly (2) from rear case (3).

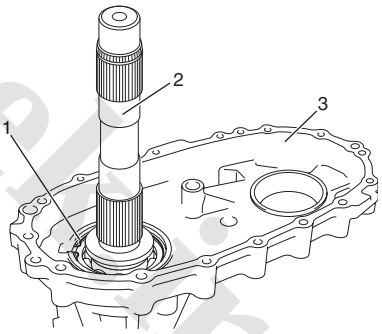


I5JB0A331025-01

15) Remove rear oil seal (1) from rear case (2) using flat end rod or the like, if necessary.

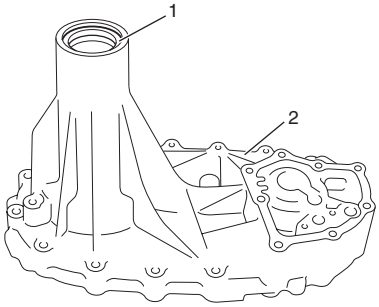


I5JB0A331026-01

www.cargeek.ir

www.CarGeek.ir

16) Remove needle bearing (1) from rear case (2) using special tool, if necessary.

**Special tool**
**(A): 09913–76010**

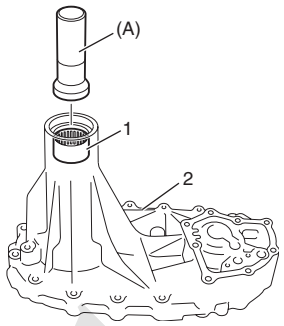


I5JB0A331027-01

17) Remove input gear plate (1), and then remove input gear assembly (3) from front case (2).

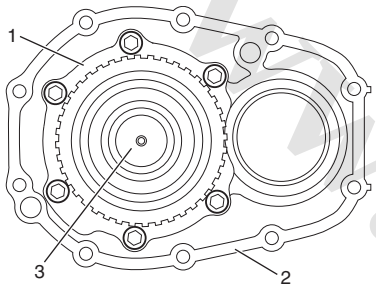


I5JB0A331091-01

18) Remove front oil seal No.2 (1) from front case (2) using flat end rod or the like, if necessary.

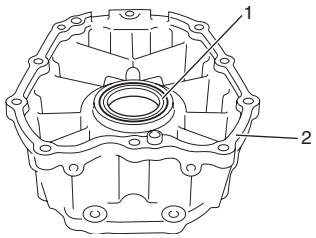


I5JB0A331030-01

**Reassembly**

1) Install front oil seal No.2 to front case (1) using special tool, and then apply grease to oil seal lip.

**: Grease 99000–25010 (SUZUKI Super Grease A)**

**Special tool**
**(A): 09913–85210**

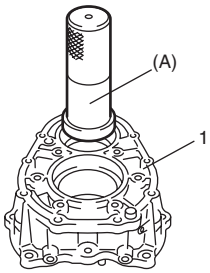


I5JB0A331033-01

2) Install input gear assembly (1) to front case (2).

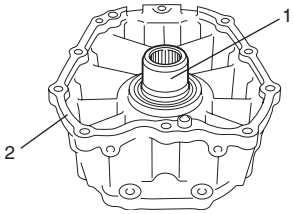


I5JB0A331092-01

3) Tighten new input gear plate bolts (1) to specified torque.

**Tightening torque**
**Input gear plate bolt (a): 23 N·m (2.3 kgf-m, 17.0 lb-ft)**

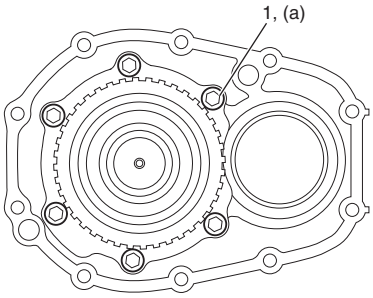


I5JB0A331093-03

4) Install needle bearing (1) to rear case (2) using special tool as shown in figure.

**<u>Distance between case and needle bearing “a”</u>**
**: 0 – 0.5 mm (0 – 0.008 in.)**

**Special tool**
**(A): 09913–76010**

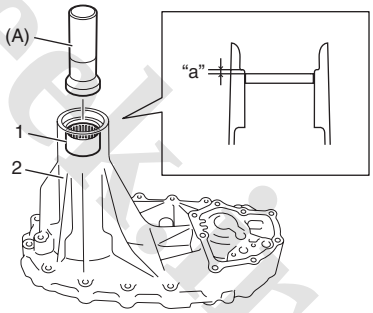


I5JB0A331036-02

5) Install new rear oil seal (1) to rear case (2) using special tool as shown in figure, and then apply grease to oil seal lip.

**<u>Distance between case and oil seal “a”</u>**
**: 3.5 – 4.5 mm (0.138 – 0.177 in.)**

**“A”: Grease 99000–25010 (SUZUKI Super Grease A)**

**Special tool**
**(A): 09913–70123**

www.cargeek.ir

www.CarGeek.ir


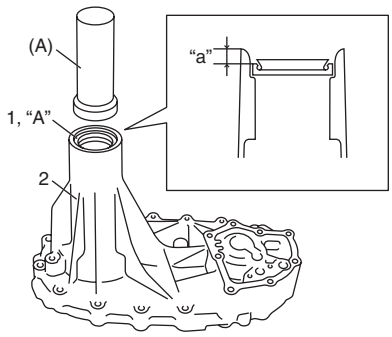


I5JB0A331094-04

6) Install rear output shaft assembly (2) to rear case (3), and then install snap ring (1).

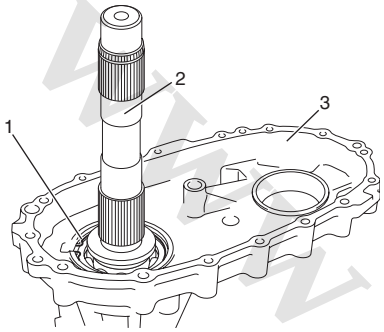


I5JB0A331025-01

7) Install front drive sprocket (1), front output shaft assembly (2), drive chain (3) and needle bearing (4) into rear case.

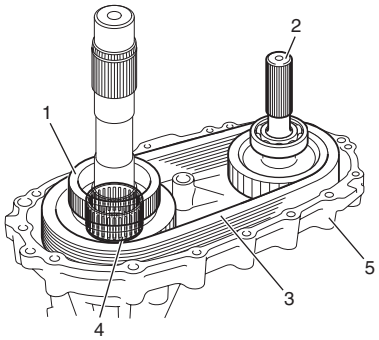


I5JB0A331024-01

8) Install front drive sprocket bush (1) into front drive sprocket (2).

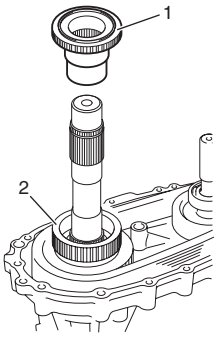


I5JB0A331039-01

9) Install differential lock clutch sleeve (1) to rear output shaft (2) as shown in figure.

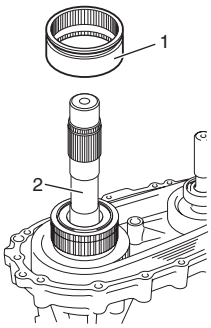


I5JB0A331040-01

10) Install thrust needle bearing (4), front drive shaft (2) and needle bearings (1) to rear output shaft (3).

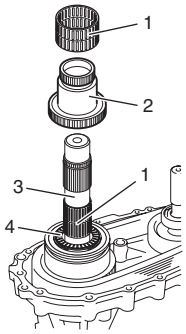


I5JB0A331041-02

11) Install center differential assembly (1) to rear output shaft (2).

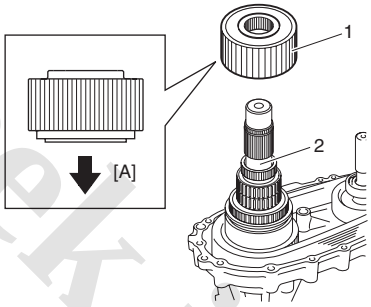


I5JB0A331095-02

[A]: Rear case side

12) Install reduction shift sleeve (1) to rear output shaft (2).

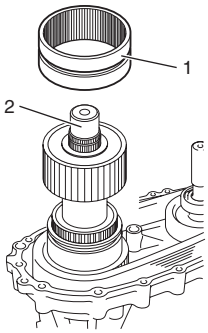


I5JB0A331096-01

www.cargeek.ir

www.CarGeek.ir

13) Select shim (1) as follows.
   a) Install shim, washer (2) and used snap ring (3) into rear output shaft (4).
   b) Check clearance between shim and washer.
   c) If clearance is out of specified value, select shim from the following table so that clearance becomes specified value.

**Clearance between shim and washer**
**: 0.1 – 0.3 mm (0.004 – 0.012 in.)**

**Available shim thickness**

| | |
|---|---|
| **0.4 mm (0.016 in.)** | **1.6 mm (0.063 in.)** |
| **0.6 mm (0.024 in.)** | **1.8 mm (0.071 in.)** |
| **0.8 mm (0.031 in.)** | **2.0 mm (0.079 in.)** |
| **1.0 mm (0.039 in.)** | **2.2 mm (0.087 in.)** |
| **1.2 mm (0.047 in.)** | **2.4 mm (0.098 in.)** |
| **1.4 mm (0.055 in.)** | |

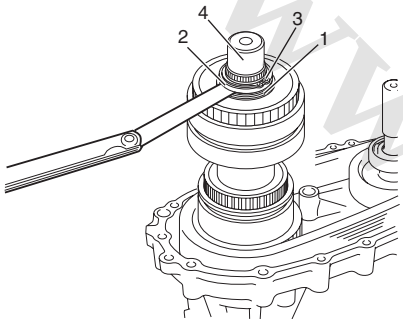

I5JB0A331097-01

14) Remove used snap ring, and then install new snap ring (2) and needle bearing (1) to rear output shaft (3).

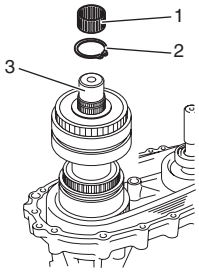

I5JB0A331098-02

15) Install needle bearing (1) to center case (2) using special tool as shown in figure.

**Distance between case and needle bearing "a"**
**: 0 – 0.5 mm (0 – 0.008 in.)**

**Special tool**
**(A): 09913–76010**

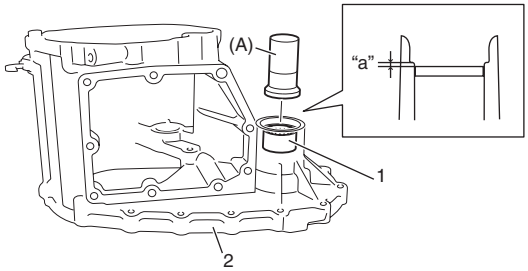

I5JB0A331099-02

16) Install oil pipe (1) and knock pin (2) into center case (3).
17) Install front oil seal No.1 (4) into center case using special tool as shown in figure, and then apply grease to oil seal lip.

**Distance between case and oil seal "a"**
**: 3.5 – 4.5 mm (0.138 – 0.177 in.)**

**"A": Grease 99000–25010 (SUZUKI Super Grease A)**

**Special tool**
**(A): 09913–70123**

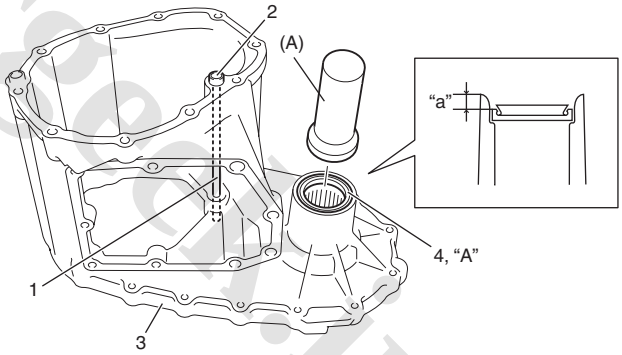

I5JB0A331100-03

www.cargeek.ir

www.CarGeek.ir


18) Clean mating surface of both center case and rear case (1), apply sealant to rear case as shown in figure by such amount that its section is 1.2 mm (0.047 in.) in diameter, mate center case with rear case and then tighten bolts (2) to specified torque.

**"A": Sealant 99000–31260 (SUZUKI Bond No.1217G)**

**Tightening torque**
**Rear case bolt (a): 23 N·m (2.3 kgf-m, 17.0 lb-ft)**

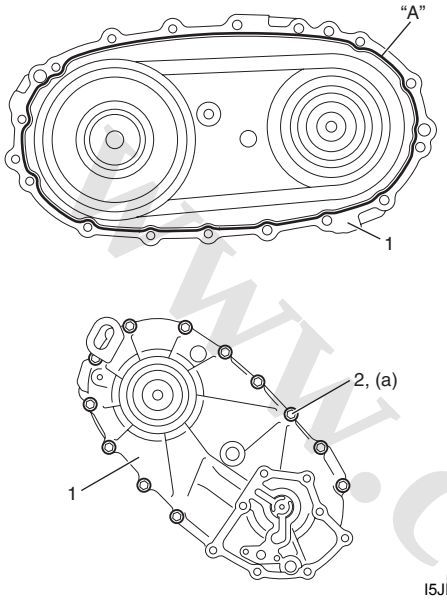

I5JB0A331101-02

19) Clean mating surface of both center case (1) and front case, apply sealant to center case as shown in figure by such amount that its section is 1.2 mm (0.047 in.) in diameter, mate front case (3) with center case and then tighten bolts (2) to specified torque.

**"A": Sealant 99000–31260 (SUZUKI Bond No.1217G)**

**Tightening torque**
**Rear case bolt (a): 23 N·m (2.3 kgf-m, 17.0 lb-ft)**

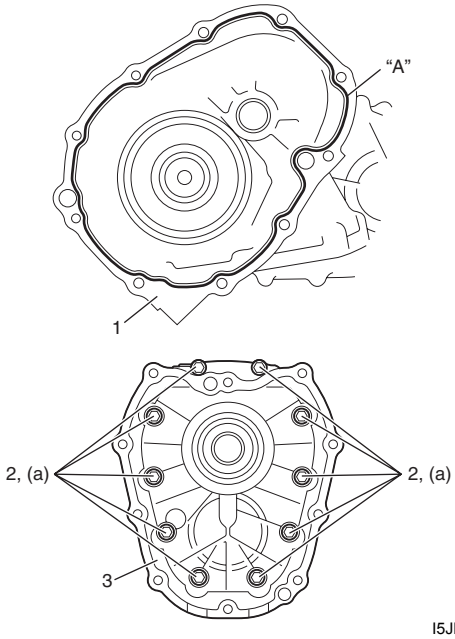

I5JB0A331102-02

20) Install oil strainer (1) to rear case (2).

**Tightening torque**
**Strainer bolt (a): 10 N·m (1.0 kgf-m, 7.5 lb-ft)**

21) Install oil pump inner rotor (3), outer rotor (4) and drive pin (5) to rear case.

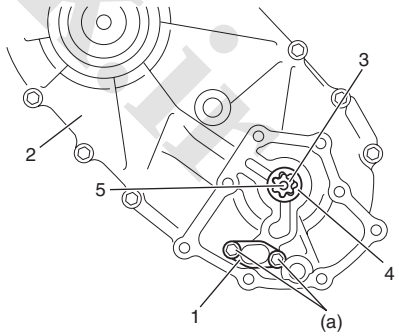

I5JB0A331103-01

www.cargeek.ir

www.CarGeek.ir

22) Clean mating surface of oil pump cover (1) and rear case (2), apply sealant to rear case as shown in figure by such amount that its section is 1.2 mm (0.047 in.) in diameter, mate oil pump cover with rear case and then tighten bolts (3) to specified torque.

**"A": Sealant 99000–31260 (SUZUKI Bond No.1217G)**

**Tightening torque**
**Oil pump cover bolt (a): 23 N·m (2.3 kgf-m, 17.0 lb-ft)**

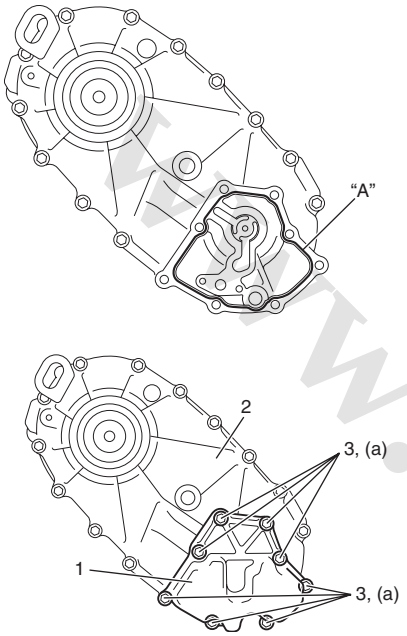

I5JB0A331104-01

23) Clean mating surface of differential lock shift lever case (1) and center case (5), apply sealant to center case as shown in figure by such amount that its section is 1.2 mm (0.047 in.) in diameter, confirm the each fork of lever case is in groove of the sleeve, mate differential lock shift lever case with center case and then tighten differential lock shift lever case bolts (3) to which thread lock cement has been applied and differential lock shift lever case dowel bolts (4) to specified torque.

**"A": Sealant 99000–31260 (SUZUKI Bond No.1217G)**
**"B": Thread lock cement 99000–32110 (Thread Lock Cement Super 1322)**

**Tightening torque**
**Differential lock shift lever case bolt (a): 23 N·m (2.3 kgf-m, 17.0 lb-ft)**
**Differential lock shift lever case dowel bolt (b): 23 N·m (2.3 kgf-m, 17.0 lb-ft)**

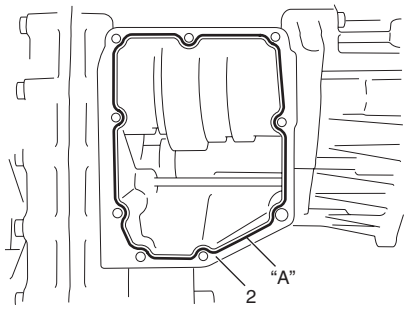


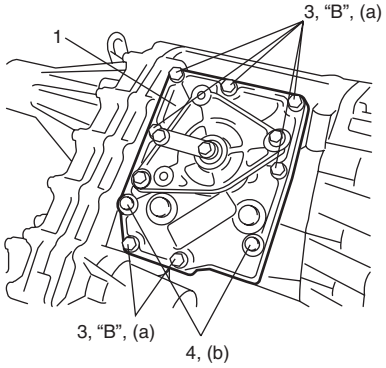

I5JB0A331105-03

## Input Gear Assembly Disassembly and Reassembly

S5JB0A3326008

Refer to "Input Gear Assembly Disassembly and Reassembly: Motor-Shift Type (Transfer with Shift Actuator)".

## Front Output Shaft Assembly Disassembly and Reassembly

S5JB0A3326009

Refer to "Front Output Shaft Assembly Disassembly and Reassembly: Motor-Shift Type (Transfer with Shift Actuator)".

## Rear Output Shaft Assembly Disassembly and Reassembly

S5JB0A3326010

Refer to "Rear Output Shaft Assembly Disassembly and Reassembly: Motor-Shift Type (Transfer with Shift Actuator)".

www.cargeek.ir

www.CarGeek.ir


# Specifications

## Tightening Torque Specifications

S5JB0A3327001

| Fastening part | Tightening torque | | | Note |
|---|---|---|---|---|
| | N·m | kgf-m | lb-ft | |
| Input gear plate bolt | 23 | 2.3 | 17.0 | ☞ |
| Rear case bolt | 23 | 2.3 | 17.0 | ☞ / ☞ |
| Strainer bolt | 10 | 1.0 | 7.5 | ☞ |
| Oil pump cover bolt | 23 | 2.3 | 17.0 | ☞ |
| Differential lock shift lever case bolt | 23 | 2.3 | 17.0 | ☞ |
| Differential lock shift lever case dowel bolt | 23 | 2.3 | 17.0 | ☞ |

**NOTE**

**The specified tightening torque is also described in the following.**
**“Transfer Assembly Components: Non-Shift Type (Transfer without Shift Actuator)”**

**Reference:**
For the tightening torque of fastener not specified in this section, refer to “Fastener Information: in Section 0A”.

# Special Tools and Equipment

## Recommended Service Material

S5JB0A3328001

| Material | SUZUKI recommended product or Specification | | Note |
|---|---|---|---|
| Grease | SUZUKI Super Grease A | P/No.: 99000–25010 | ☞ / ☞ / ☞ |
| Sealant | SUZUKI Bond No.1217G | P/No.: 99000–31260 | ☞ / ☞ / ☞ / ☞ |
| Thread lock cement | Thread Lock Cement Super 1322 | P/No.: 99000–32110 | ☞ |

**NOTE**

**Required service material is also described in the following.**
**“Transfer Assembly Components: Non-Shift Type (Transfer without Shift Actuator)”**

## Special Tool

S5JB0A3328002

| | |
|---|---|
| 09912–34510<br>Case separator<br>☞ 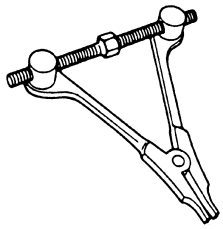 | 09913–70123<br>Bearing installing tool<br>☞ / ☞ 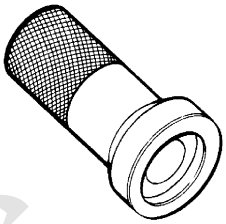 |
| 09913–76010<br>Bearing installer<br>☞ / ☞ / ☞ / ☞ 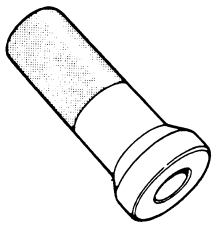 | 09913–85210<br>Bearing installer<br>☞ 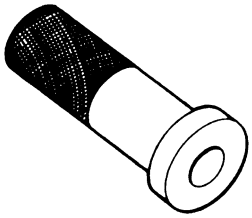 |

www.cargeek.ir

www.CarGeek.ir

# Propeller Shafts

## Precautions

### Propeller Shaft Caution

S5JB0A3400001

**⚠ CAUTION**

- **All propeller shaft fasteners are an important attaching part in that it could affect the performance of vital parts and systems, and/or could result in major repair expense. They must be replaced with one of the same part number or with an equivalent part if replacement becomes necessary. Do not use a replacement part of lesser quality or substitute design. Torque values must be used as specified during reassembly to assure proper retention of this part.**
- **Never attempt to heat, quench or straighten any propeller shaft part. Replace it with a new part, or damage to the part may result.**

## General Description

### Propeller Shaft Construction

S5JB0A3401001

Most universal joints and ball joints require no maintenance. They are lubricated for life and can not be lubricated on the vehicle. If a universal joint becomes noisy or worn, it must be replaced.
The propeller shaft is a balanced unit. Handle it carefully so that balance can be maintained.

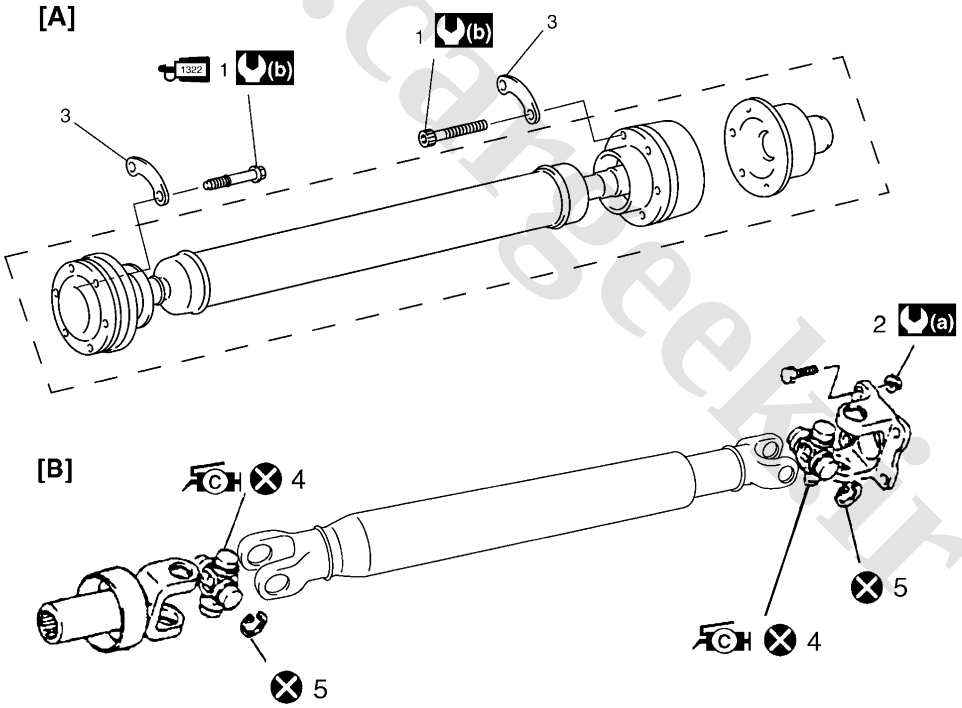


I5JB0A340001-02

| | |
|---|---|
| [A]: Front propeller shaft | C 4. Spider joint assembly<br>: Apply grease (99000-25030) to spider bearing race. |
| [B]: Rear propeller shaft | 5. Circlip |
| 1322 1. Front propeller shaft flange bolt<br>: Apply thread lock 99000-32110 to bolt thread. | (a) : 85 N·m (8.5 kgf-m, 61.5 lb-ft) |
| 2. Rear propeller shaft flange nut | (b) : 30 N·m (3.0 kgf-m, 22.0 lb-ft) |
| 3. Support washer | ⊗ : Do not reuse. |

www.cargeek.ir

www.CarGeek.ir


# Diagnostic Information and Procedures

## Propeller Shaft Symptom Diagnosis

S5JB0A3404001

| Condition | Possible cause | Correction / Reference Item |
|---|---|---|
| ***Abnormal noise*** | Loose propeller shaft flange bolt and nut | *Tighten propeller shaft flange bolt and nut.* |
| | Spider bearing worn out or stuck | *Replace.* |
| | Wear spider | *Replace propeller shaft.* |
| ***Vibration*** | Deformed propeller shaft | *Replace.* |

# Repair Instructions

## Propeller Shaft Joint Check

S5JB0A3406001

If universal joints and ball joints are suspected of producing chattering or rattling noise, inspect them for wear. For universal joint, check to see if cross spider rattles in yokes or if splines are worn down and replace defective propeller shaft assembly with new one.
Noise coming from universal joint and ball joint can be easily distinguished from other noises because rhythm of chattering or rattling is in step with cruising speed. Noise is pronounced particularly on standing start or in coasting condition (when braking effect of engine is showing in the drive line).

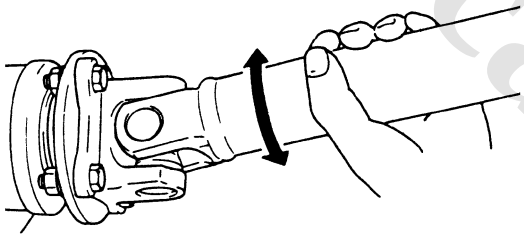

I5JB0A340003-01

## Propeller Shaft Removal and Installation

S5JB0A3406002

### Removal

1) Hoist vehicle.
2) Give match marks (1) on joint flange and propeller shaft as shown in the figure.

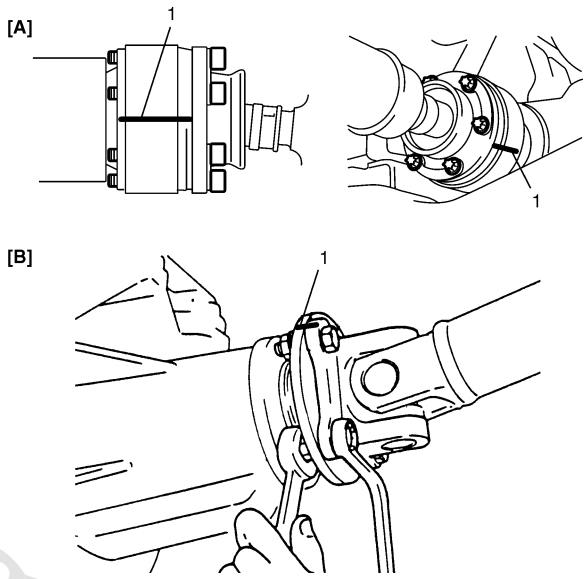


I5JB0A340002-02

| | |
|---|---|
| [A]: | Front propeller shaft |
| [B]: | Rear propeller shaft |

3) Remove propeller shaft.

### Installation

Reverse removal procedure to install propeller shaft noting the following points.

- Clean and inspect sliding portion of propeller shaft end (where oil seal contacts) before installation and if even small dent or scratch exists, correct end clean it again.
  Then apply grease inside splines of propeller shaft.

  **"B": Grease 99000–25010 (SUZUKI Super Grease A)**

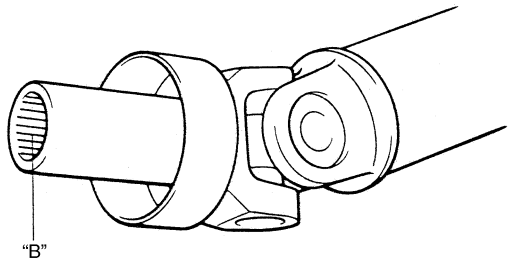


IYSQ01521009-01

www.cargeek.ir

www.CarGeek.ir

- Install propeller shaft aligning match marks. Otherwise, vibration may occur during driving.
- Use the following specification to torque universal joint flange nuts and bolts. For front propeller shaft flange bolt (front differential side), apply thread lock cement to thread part of bolts if reused.

**"A": Thread lock cement 99000–32110 (Thread Lock Cement Super 1322)**

**Tightening torque**
**Front propeller shaft flange bolt (a): 30 N·m (3.0 kgf-m, 22.0 lb-ft)**
**Rear propeller shaft flange nut (b): 85 N·m (8.5 kgf-m, 61.5 lb-ft)**

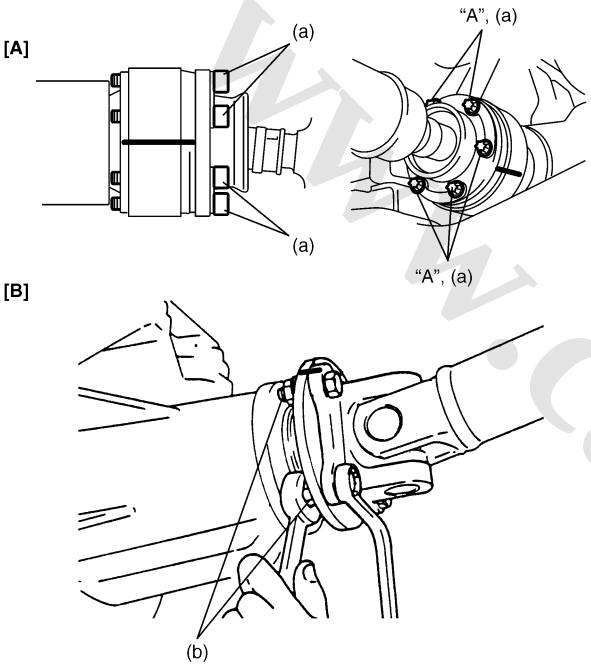


I5JB0A340004-01

| | |
|---|---|
| [A]: | Front propeller shaft |
| [B]: | Rear propeller shaft |

## Propeller Shaft Disassembly and Assembly

S5JB0A3406005

**⚠ CAUTION**

**Never disassemble each joint.**
**Performing this prohibited service will affect its original performance.**

### Disassembly

1) Give match marks (1) on flange yoke and shaft as shown in the figure.

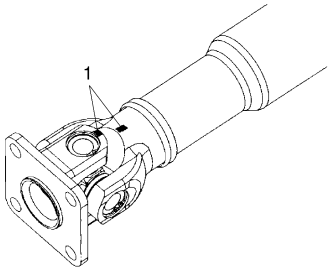


I5JB0A340007-01

2) Using snap ring plier (1), remove 2 circlips.

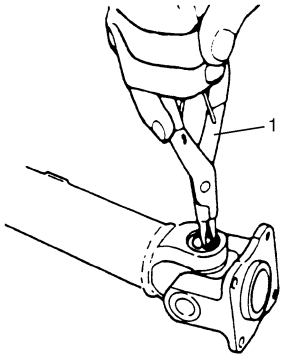


I5JB0A340005-02

3) Using special tool, push spider bearing race out 3 – 4 mm (0.12 – 0.16 in.) from shaft yoke race.

**NOTE**

**Before pushing it out, apply penetrate lubricant between bearing race (1) and yoke race (2).**

**Special tool**
**(A): 09926-48010**

**Spider bearing race installing position (length "a")**
**"a": 3 – 4 mm (0.12 – 0.16 in.)**

www.cargeek.ir

www.CarGeek.ir


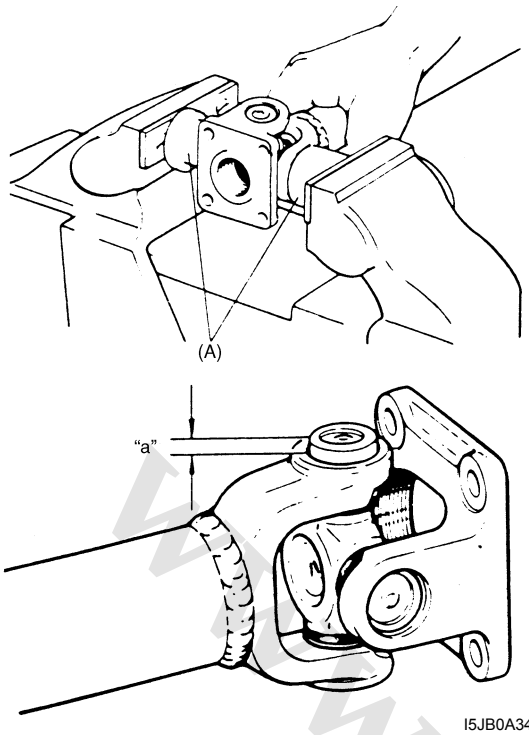

I5JB0A340006-01

4) Tapping yoke with a hammer, completely remove bearing race.

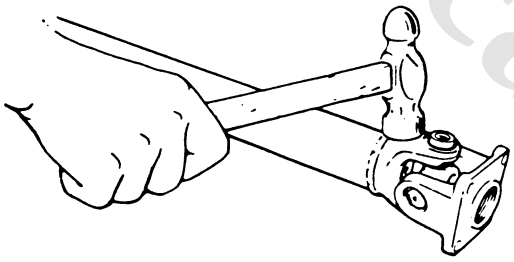
IYSQ01340007-01

5) Take out bearing race on the other side in the same way as in Step 3) and 4).
6) Push out bearing race on flange yoke side as described in Step 2) and 3), and then, holding bearing race in a vise (1), tap flange yoke and take out race. (Refer to the figure.)
   Remove bearing race on the opposite side in the same way.

**NOTE**

- **Take care not to lose rollers in spider bearing race when removing it.**
- **Fit removed bearings temporarily in spider so that they can be reinstalled in their original positions.**

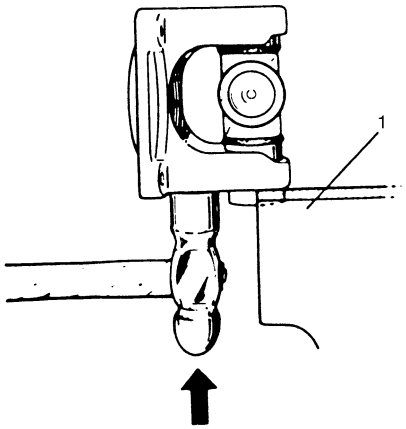

IYSQ01340008-01

## Assembly

**NOTE**

**Make sure that rollers inside spider bearing race are all in place.**

**⚠ CAUTION**

**In assembly, be sure to use new circlips, spider (1) and bearings (2). Reuse of circlips, spider (1) and bearings (2) once assembled is prohibited.**

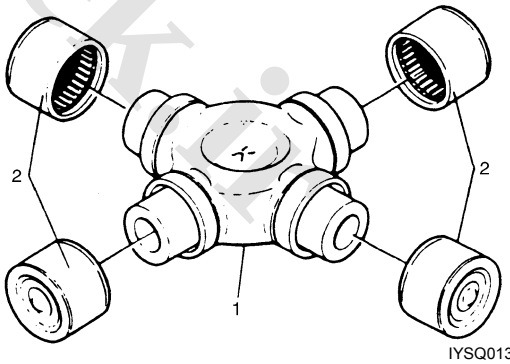

IYSQ01340010-01

www.cargeek.ir

www.CarGeek.ir

1) Make sure to apply grease to spider bearing race.

   **"A": Grease 99000–25030 (SUZUKI Super Grease C)**

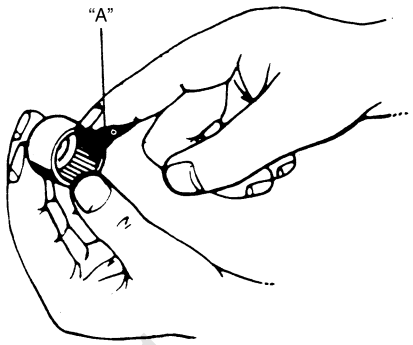


IYSQ01340009-01

2) Insert bearing race into yoke, using press, until it is flush with yoke face. When doing this, insert spider into bearing race to prevent rollers in bearing race from coming out.
3) Aligning match marks (1) and insert the other bearing race on the opposite side into yoke, using press until it is flush with yoke face.

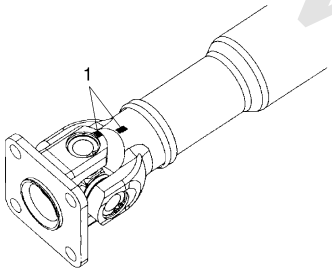


I5JB0A340007-01

4) Insert bearing races on the flange yoke side in the same way as described in Step 1) and 2).
5) Securely fit 4 circlips to shaft and flange yoke.

**NOTE**

- **Make sure that each circlip is fitted in groove securely.**

6) After assembly, check to ensure that both shaft yoke and flange yoke move smoothly.

### Propeller Shaft Inspection

S5JB0A3406004

Inspect propeller shaft, universal joint and ball joint for damage, and propeller shaft for runout.
If damage is found or shaft runout exceeds its limit, replace.

**Propeller shaft runout**
**Limit: 0.8 mm (0.031 in.)**

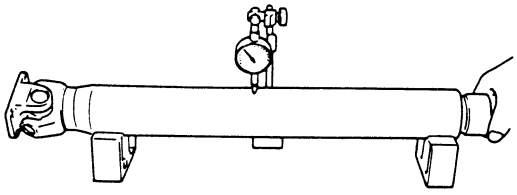

IYSQ01340013-01

## Specifications

### Tightening Torque Specifications

S5JB0A3407001

| Fastening part | Tightening torque | | | Note |
|---|---|---|---|---|
| | N·m | kgf-m | lb-ft | |
| Front propeller shaft flange bolt | 30 | 3.0 | 22.0 | ☞ |
| Rear propeller shaft flange nut | 85 | 8.5 | 61.5 | ☞ |

**NOTE**

**The specified tightening torque is also described in the following.**
**"Propeller Shaft Construction: "**

**Reference:**
For the tightening torque of fastener not specified in this section, refer to "Fastener Information: in Section 0A".

www.cargeek.ir

www.CarGeek.ir


# Special Tools and Equipment

## Recommended Service Material

S5JB0A3408001

| Material | SUZUKI recommended product or Specification | | Note |
|---|---|---|---|
| Grease | SUZUKI Super Grease A | P/No.: 99000–25010 | ☞ |
| | SUZUKI Super Grease C | P/No.: 99000–25030 | ☞ |
| Thread lock cement | Thread Lock Cement Super 1322 | P/No.: 99000–32110 | ☞ |

**NOTE**

**Required service material is also described in the following.**
**“Propeller Shaft Construction: ”**

## Special Tool

S5JB0A3408002

| | |
|---|---|
| 09926–48010<br>Universal joint assembling tool<br>☞ 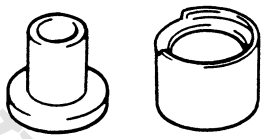 | |

www.cargeek.ir

www.CarGeek.ir

www.cargeek.ir

www.cargeek.ir

www.CarGeek.ir


# Section 4

# Brakes

## CONTENTS


**Precautions ..... 4-1**
- **Precautions ..... 4-1**
  - Precautions for Brakes ..... 4-1

**Brake Control System and Diagnosis ... 4A-1**
- **General Description ..... 4A-1**
  - Brakes Construction ..... 4A-1
  - Front Brake Hose / Pipe Construction ..... 4A-2
  - Rear Brake Hose / Pipe Construction ..... 4A-3
  - Master Cylinder Assembly Construction ..... 4A-3
  - Booster Assembly Construction ..... 4A-4
- **Diagnostic Information and Procedures ..... 4A-4**
  - Brake Diagnosis Note ..... 4A-4
  - Brakes Symptom Diagnosis ..... 4A-5
- **Repair Instructions ..... 4A-7**
  - Excessive Pedal Travel Check ..... 4A-7
  - Brake Pedal Play Check ..... 4A-7
  - Brake Fluid Level Check ..... 4A-7
  - Air Bleeding of Brake System ..... 4A-8
  - Brake Pedal Free Height Adjustment ..... 4A-9
  - Brake Light Switch Adjustment ..... 4A-9
  - Brake Flexible Hose and Pipe Check ..... 4A-9
  - Master Cylinder Check ..... 4A-9
  - Flushing Brake Hydraulic System ..... 4A-10
  - Booster Operation Check ..... 4A-10
  - Front Brake Hose / Pipe Removal and Installation ..... 4A-11
  - Rear Brake Hose / Pipe Removal and Installation ..... 4A-11
  - Master Cylinder Components ..... 4A-12
  - Master Cylinder Reservoir Removal and Installation ..... 4A-13
  - Master Cylinder Assembly Removal and Installation ..... 4A-14
  - Master Cylinder Assembly Inspection ..... 4A-15
  - Brake Booster Components ..... 4A-16
  - Brake Booster Removal and Installation ..... 4A-17
  - Booster Push Rod Clevis Adjustment ..... 4A-17
- **Specifications ..... 4A-18**
  - Tightening Torque Specifications ..... 4A-18
- **Special Tools and Equipment ..... 4A-18**
  - Recommended Service Material ..... 4A-18
  - Special Tool ..... 4A-18

**Front Brakes ..... 4B-1**
- **General Description ..... 4B-1**
  - Front Disc Brake Caliper Assembly Construction ..... 4B-1
- **Repair Instructions ..... 4B-2**
  - Front Disc Brake Components ..... 4B-2
  - Front Disc Brake Pad On-Vehicle Check ..... 4B-3
  - Front Disc Brake Pad Removal and Installation ..... 4B-3
  - Front Brake Disc and Pad Inspection ..... 4B-4
  - Front Disc Brake Caliper Removal and Installation ..... 4B-5
  - Front Disc Brake Caliper Disassembly and Assembly ..... 4B-6
  - Front Disc Brake Caliper Inspection ..... 4B-7
  - Front Brake Disc Removal and Installation ..... 4B-8
  - Front Brake Disc Inspection ..... 4B-8
- **Specifications ..... 4B-9**
  - Tightening Torque Specifications ..... 4B-9
- **Special Tools and Equipment ..... 4B-9**
  - Recommended Service Material ..... 4B-9

**Rear Brakes ..... 4C-1**
- **General Description ..... 4C-1**
  - Rear Drum Brake Assembly Construction ..... 4C-1
- **Repair Instructions ..... 4C-2**
  - Rear Drum Brake Assembly Components ..... 4C-2
  - Rear Brake Drum Removal and Installation ..... 4C-3
  - Rear Brake Drum and Shoe Inspection ..... 4C-4
  - Rear Brake Shoe On-Vehicle Check ..... 4C-4
  - Rear Brake Shoe Removal and Installation ..... 4C-5
  - Rear Brake Shoe Inspection ..... 4C-6
  - Wheel Cylinder Removal and Installation ..... 4C-6
  - Wheel Cylinder Inspection ..... 4C-7
  - Rear Brake Back Plate Removal and Installation ..... 4C-7
- **Specifications ..... 4C-9**
  - Tightening Torque Specifications ..... 4C-9
- **Special Tools and Equipment ..... 4C-9**
  - Recommended Service Material ..... 4C-9

**Parking Brake ..... 4D-1**
- **Component Location ..... 4D-1**
  - Parking Brake Cable Location ..... 4D-1
- **Repair Instructions ..... 4D-3**
  - Parking Brake Check and Adjustment ..... 4D-3
  - Parking Brake Lever Removal and Installation ..... 4D-4
  - Parking Brake Cable Removal and Installation ..... 4D-4
- **Specifications ..... 4D-5**
  - Tightening Torque Specifications ..... 4D-5


4

www.cargeek.ir

www.CarGeek.ir

**ABS ..... 4E-1**
**Precautions ..... 4E-1**
Precautions in Diagnosing Troubles ..... 4E-1
Precautions in On-Vehicle Service ..... 4E-1
**General Description ..... 4E-1**
ABS Description ..... 4E-1
ABS Hydraulic Unit / Control Module Assembly Description ..... 4E-2
CAN Communication System Description ..... 4E-2
**Schematic and Routing Diagram ..... 4E-3**
ABS Schematic ..... 4E-3
ABS Wiring Circuit Diagram ..... 4E-4
**Component Location ..... 4E-6**
ABS Components Location ..... 4E-6
**Diagnostic Information and Procedures ..... 4E-7**
ABS Check ..... 4E-7
ABS Warning Lamp Check ..... 4E-9
EBD Warning Lamp (Brake Warning Lamp) Check ..... 4E-9
DTC Check ..... 4E-9
DTC Table ..... 4E-10
DTC Clearance ..... 4E-10
Scan Tool Data ..... 4E-10
ABS Warning Lamp Does Not Come ON at Ignition Switch ON ..... 4E-11
ABS Warning Lamp Comes ON Steady ..... 4E-13
ABS Warning Lamp Flashes Continuously while Ignition Switch Is ON ..... 4E-15
EBD Warning Lamp (Brake Warning Lamp) Comes ON Steady ..... 4E-16
Serial Data Link Circuit Check ..... 4E-17
DTC C1015: G Sensor Circuit ..... 4E-19
DTC C1021, C1022 / C1025, C1026 / C1031, C1032 / C1035, C1036: Right-Front / Left-Front / Right-Rear / Left-Rear Wheel Speed Sensor Circuit or Encoder ..... 4E-20
DTC C1041 / C1045 / C1051 / C1055, DTC C1042 / C1046 / C1052 / C1056: Right-Front / Left-Front / Right-Rear / Left-Rear Inlet Solenoid Circuit, Right-Front / Left-Front / Right-Rear / Left-Rear Outlet Solenoid Circuit 4E-22
DTC C1057: Power Source Circuit ..... 4E-23
DTC C1061: ABS Pump Motor and/or Motor Driver Circuit ..... 4E-24
DTC C1063: Solenoid Valve Power Supply Driver Circuit ..... 4E-25
DTC C1071: ABS Control Module ..... 4E-26
DTC U1073: Control Module Communication Bus Off ..... 4E-27
DTC U1100: Lost Communication with ECM (Reception Error) ..... 4E-29
**Repair Instructions ..... 4E-30**
ABS Hydraulic Unit Operation Check ..... 4E-30
ABS Hydraulic Unit / Control Module Assembly Components ..... 4E-31
ABS Hydraulic Unit / Control Module Assembly On-Vehicle Inspection ..... 4E-31
ABS Hydraulic Unit / Control Module Assembly Removal and Installation ..... 4E-32
Front Wheel Speed Sensor On-Vehicle Inspection ..... 4E-34
Front Wheel Speed Sensor Removal and Installation ..... 4E-35
Front Wheel Speed Sensor Inspection ..... 4E-36
Rear Wheel Speed Sensor On-Vehicle Inspection ..... 4E-36
Rear Wheel Speed Sensor Removal and Installation ..... 4E-36
Rear Wheel Speed Sensor Inspection ..... 4E-37
Front Wheel Encoder On-Vehicle Inspection ..... 4E-37
Front Wheel Encoder Removal and Installation ..... 4E-37
Rear Wheel Encoder On-Vehicle Inspection ..... 4E-37
Rear Wheel Encoder Removal and Installation ..... 4E-37
**Specifications ..... 4E-38**
Tightening Torque Specifications ..... 4E-38
**Special Tools and Equipment ..... 4E-38**
Special Tool ..... 4E-38

www.cargeek.ir

www.CarGeek.ir


# Precautions

## Precautions

### Precautions for Brakes

S5JB0A4000001

**Suspension Caution**
Refer to “Suspension Caution: in Section 00”.

**Wheels and Tires Caution**
Refer to “Wheels and Tires Caution: in Section 00”.

**Brake Caution**
Refer to “Brakes Caution and Note: in Section 00”.

**General Precautions**
Refer to “General Precautions: in Section 00”.

**Vehicle Lifting Points**
Refer to “Vehicle Lifting Points: in Section 0A”.

**Fastener Caution**
Refer to “Fastener Caution: in Section 00”.

**Fastener Information**
Refer to “Fastener Information: in Section 0A”.

www.cargeek.ir

www.cargeek.ir

 www.CarGeek.ir

# Brake Control System and Diagnosis

## General Description

### Brakes Construction

S5JB0A4101001

When the foot brake pedal is depressed, hydraulic pressure is developed in the master cylinder (2) to actuate pistons (two in front and four in rear).
The master cylinder is a tandem master cylinder. Brake pipes are connected to the master cylinder and they make two independent circuits. One connects front right and rear left brakes and the other connects front left and rear right brakes.
In this brake system, the disc brake type is used for the front wheel brake and a drum brake type (leading / trailing shoes) for the rear brake.
The parking brake system is mechanical. It applies brake force to only rear wheels by means of the cable and mechanical linkage system. The same brake shoes are used for both parking and foot brakes.

**NOTE**

**The difference between RH steering vehicle and LH steering vehicle is the location of the brake master and the brake booster only.**

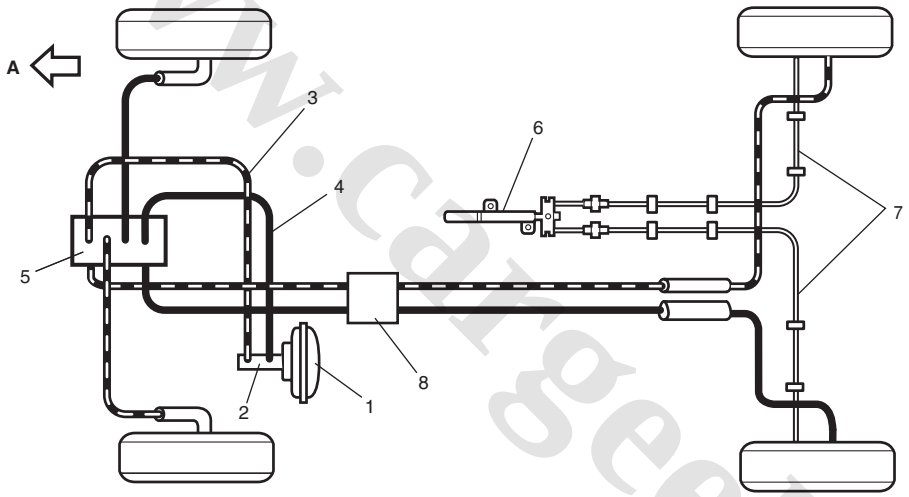


I5JB0A410001-02

| | | |
|---|---|---|
| 1. Brake booster | 4. Primary side | 7. Parking brake cable |
| 2. Master cylinder | 5. ABS hydraulic unit / control module assembly | 8. 4-way joint |
| 3. Secondary side | 6. Parking brake lever | A: Forward |

www.cargeek.ir

## Front Brake Hose / Pipe Construction

S5JB0A4101006

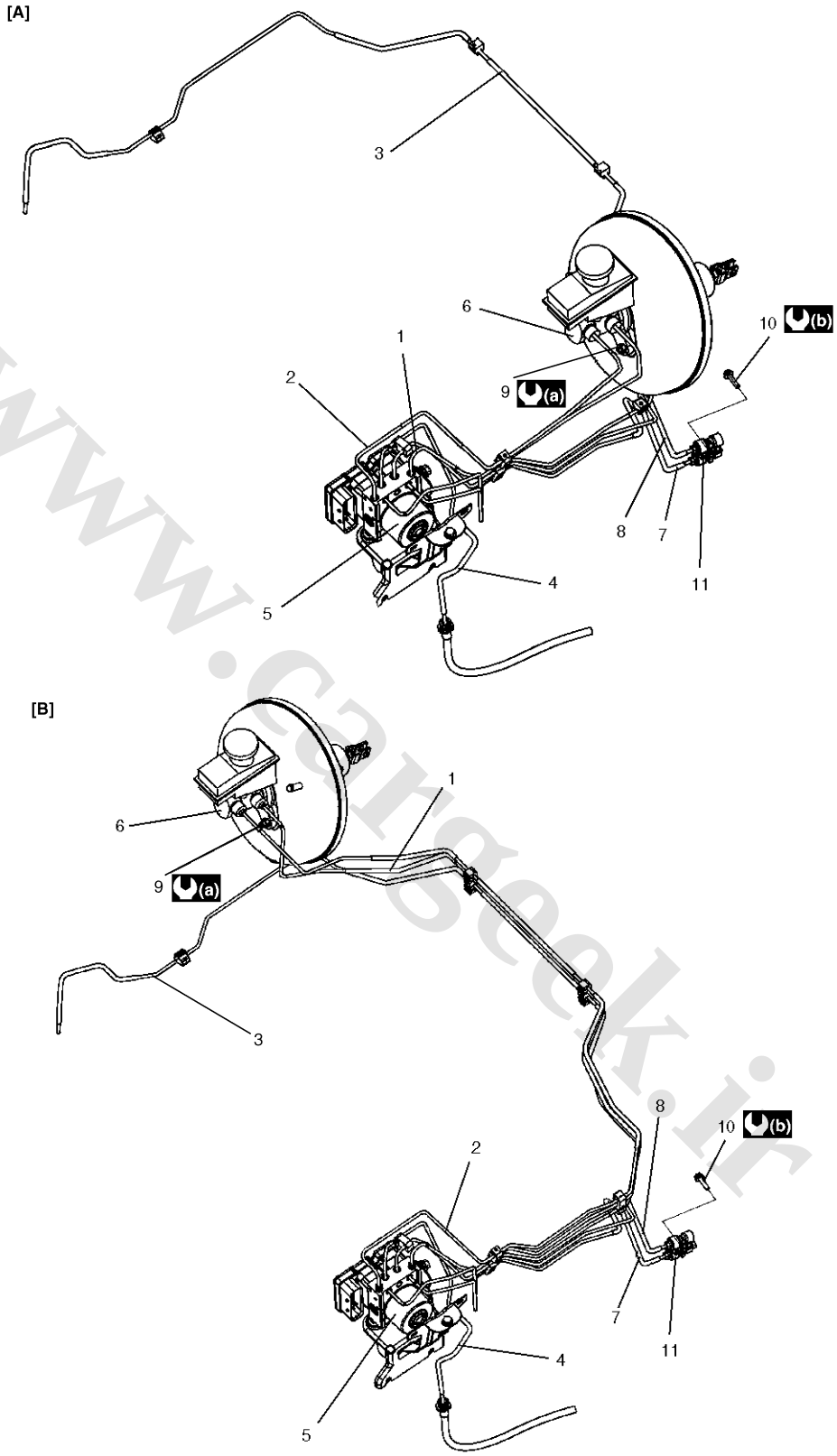


I5JB0A410002-02

| | | |
|---|---|---|
| [A]: For LH steering vehicle | 4. From ABS hydraulic unit to left front brake | 9. Master cylinder fixing nut |
| [B]: For RH steering vehicle | 5. ABS hydraulic unit / control module assembly | 10. Brake joint bolt |
| 1. From master cylinder primary to ABS hydraulic unit | 6. Master cylinder | 11. 4-way joint |
| 2. From master cylinder secondary to ABS hydraulic unit | 7. From ABS hydraulic unit to left rear brake | (a) : 18 N·m (1.8 kgf-m, 13.0 lb-ft) |
| 3. From ABS hydraulic unit to right front brake | 8. From ABS hydraulic unit to right rear brake | (b) : 11 N·m (1.1 kgf-m, 8.0 lb-ft) |

www.cargeek.ir

 www.CarGeek.ir

## Rear Brake Hose / Pipe Construction

S5JB0A4101007

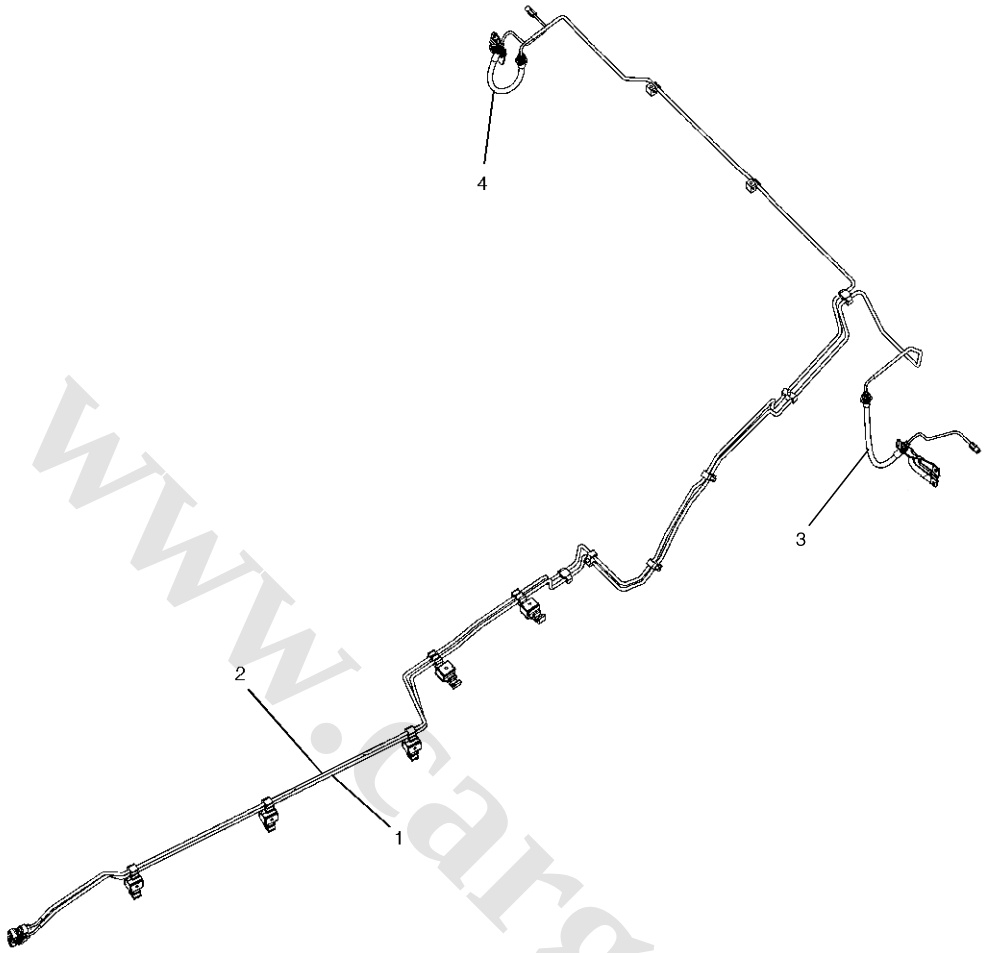


I5JB0A410003-02

| | |
|---|---|
| 1. To left rear brake hose | 3. Left rear brake hose |
| 2. To right rear brake hose | 4. Right rear brake hose |

## Master Cylinder Assembly Construction

S5JB0A4101003

The master cylinder has two pistons, two pressure seal (3) and two separating seal (4). Its hydraulic pressure is produced in the primary (A in the figure) and secondary (B) chambers. The hydraulic pressure produced in the primary chamber (A) acts on the front right and rear left brakes.
Also, the hydraulic pressure produced in the secondary chamber (B) acts on the front left and rear right brakes.

**⚠ WARNING**

**Brake master cylinder cannot be disassembled. When anything faulty is found in it, it must be replaced as an assembly.**

**⚠ CAUTION**

**Brake master cylinder cannot be disassembled in principle. Should primary piston (1) have come off from cylinder while dismounting or handling it, wash it in the same specified fluid as that in reservoir and place it back in cylinder.**

www.cargeek.ir

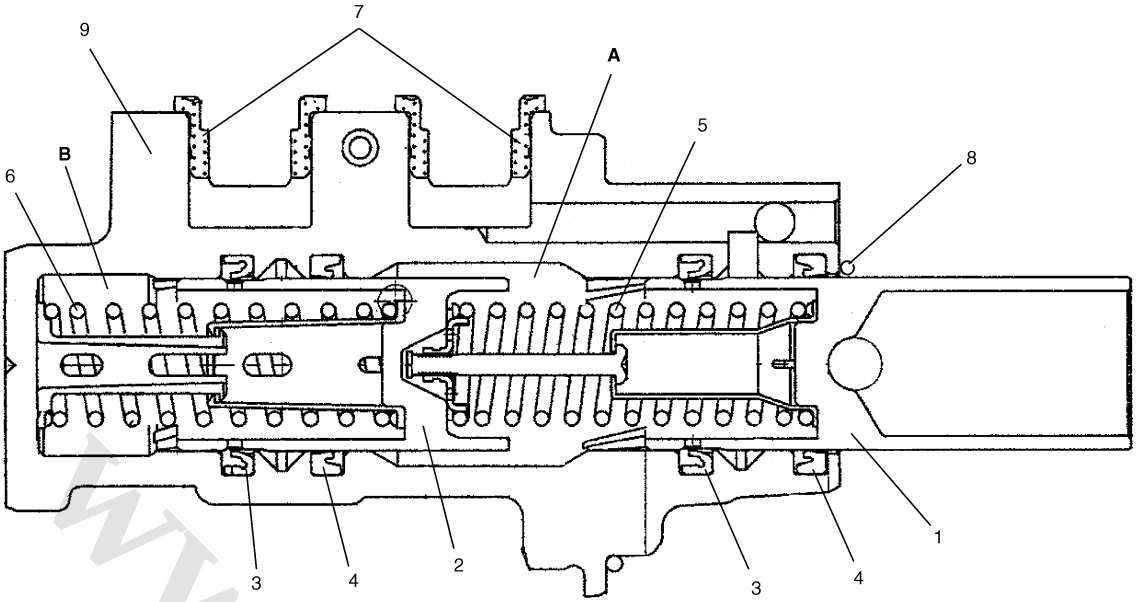


I5JB0A410004-01

| | | |
|---|---|---|
| 2. Secondary piston | 6. Secondary piston return spring | 8. O-ring |
| 5. Primary piston return spring | 7. Grommet | 9. Master cylinder body |

### Booster Assembly Construction

S5JB0A4101004

The booster is located between the master cylinder and the brake pedal. It is so designed that the force created when the brake pedal is depressed is mechanically increased combined with the engine vacuum.

**⚠ CAUTION**

- **Never disassemble brake booster assembly. If it is found faulty, replace it with new assembly.**
- **The torque values specified are for dry, unlubricated fasteners. If any hydraulic component is removed or brake line disconnected, bleed the brake system.**

## Diagnostic Information and Procedures

### Brake Diagnosis Note

S5JB0A4104001

**Road Test for Brakes**

Brakes should be tested on dry, clean, smooth and reasonably level roadway which is not crowned.
Road test brakes by making brake applications with both light and heavy pedal forces at various speeds to determine if the vehicle stops evenly and effectively.
Also drive vehicle to see if it leads to one side or the other without brake application. If it does, check the tire pressure, front end alignment and front suspension attachments for looseness.
See diagnosis flow table for other causes.

**Brake Fluid Inspection**

**Brake fluid leaks**

Check the master cylinder fluid levels. While a slight drop in reservoir level does result from normal lining wear, an abnormally low level indicates a leak in the system. In such a case, check the entire brake system for leakage. If even a slight evidence of leakage is noted, the cause should be corrected or defective parts should be replaced.
If fluid level is lower than the minimum level of reservoir, refilling is necessary.
Fill reservoir with specified brake fluid.

**Brake fluid**

**Refer to reservoir cap.**

**⚠ CAUTION**

**Since brake system of this vehicle is factory filled with brake fluid indicated on reservoir cap, do not use or mix different type of fluid when refilling; otherwise serious damage will occur.**
**Do not use old or used brake fluid, or any fluid from a unsealed container.**

www.cargeek.ir

 www.CarGeek.ir

**Substandard or contaminated brake fluid**

⚠ **CAUTION**

**Improper brake fluid, mineral oil or water in the fluid may cause the brake fluid to boil or the rubber components in the hydraulic system to deteriorate.**

If primary piston cups are swollen, then rubber parts have deteriorated. The deterioration may also be evidenced by swollen wheel cylinder piston cups on the drum brake wheel.

If deterioration of rubber is evident, disassemble all hydraulic parts and wash with alcohol. Dry these parts with compressed air before assembly to keep alcohol out of the system. Replace all rubber parts in the system, including hoses. Also, when working on the brake mechanisms, check for fluid on the linings. If excessive fluid is found, replace the linings.
The system must be flushed if there is any doubt as to the grade of fluid in the system or if fluid has been used which contained parts that have been subjected to contaminated fluid.

## Brakes Symptom Diagnosis

S5JB0A4104002

| Condition | Possible cause | Correction / Reference Item |
|---|---|---|
| ***Not enough braking force*** | Brake fluid leakage from brake lines | *Locate leaking point and repair.* |
| | Brake disc or pads stained with fluid | *Clean or replace.* |
| | Overheated brakes | *Determine cause and repair.* |
| | Poor contact of shoes on brake drum | *Repair for proper contact.* |
| | Brake shoes linings stained with fluid or wet with water | *Replace.* |
| | Badly worn brake shoe linings | *Replace.* |
| | Defective wheel cylinders | *Repair or replace.* |
| | Malfunctioning caliper assembly | *Repair or replace.* |
| | Air in system | *Bleed system.* |
| | Malfunctioning ABS (Antilock brake system), if equipped | *Check system and replace as necessary.* |
| ***Brake pull (Brakes not working in unison)*** | Pad or shoe linings are wet with water or stained with fluid in some brakes | *Replace.* |
| | Drum-to-shoe clearance out of adjustment in some brakes. (malfunctioning auto adjusting mechanism) | *Check for inoperative auto adjusting mechanism.* |
| | Drum is out of round in some brakes | *Replace.* |
| | Wheel tires are inflated unequally | *Inflate equally.* |
| | Malfunctioning wheel cylinders | *Repair or replace.* |
| | Disturbed front end alignment | *Adjust as prescribed.* |
| | Unmatched tires on same axle | *Tires with approximately the same amount of tread should be used on the same axle.* |
| | Restricted brake pipes or hoses | *Check for soft hoses and damaged lines. Replace with new hoses and new brake piping.* |
| | Malfunctioning caliper assembly | *Check for stuck or sluggish pistons and proper lubrication of caliper slide bush.* |
| | Loose suspension parts | *Caliper should slide. Check all suspension mountings.* |
| | Loose calipers | *Check and torque bolts to specifications.* |
| ***Brake locked (For vehicles equipped with ABS)*** | Malfunctioning ABS, if equipped | *Check system and replace as necessary.* |
| ***Excessive pedal travel (Pedal stroke too large)*** | Partial brake system failure | *Check brake systems and repair as necessary.* |
| | Insufficient fluid in master cylinder reservoirs | *Fill reservoirs with approved brake fluid. Check for leaks and air in brake systems. Check warning light. Bleed system if required.* |
| | Air in system (pedal soft / spongy) | *Bleed system.* |
| | Rear brake system not adjusted (malfunctioning auto adjusting mechanism) | *Repair auto adjusting mechanism. Adjust rear brakes.* |
| | Bent brake shoes | *Replace brake shoes.* |
| | Worn rear brake shoes | *Replace brake shoes.* |

www.cargeek.ir

| Condition | Possible cause | Correction / Reference Item |
|---|---|---|
| ***Dragging brakes (A very light drag is present in all disc brakes immediately after pedal is released)*** | Master cylinder pistons not returning correctly | *Replace master cylinder.* |
| | Restricted brake pipes or hoses | *Check for soft hoses or damaged pipes and replace with new hoes and/or new brake pipes.* |
| | Incorrect parking brake adjustment on rear brakes | *Check and adjust to correct specifications.* |
| | Weakened or broken return springs in the brake | *Replace.* |
| | Sluggish parking-brake cables or linkage | *Repair or replace.* |
| | Wheel cylinder or caliper piston sticking | *Repair as necessary.* |
| | Malfunctioning ABS, if equipped with ABS | *Check system and replace as necessary.* |
| ***Pedal pulsation (Pedal pulsates when depressed for braking)*** | Damaged or loose wheel bearings | *Replace wheel bearings.* |
| | Distorted steering knuckle or rear axle shafts | *Replace knuckle or rear axle shaft.* |
| | Excessive disc lateral runout | *Check per instructions. If not within specifications, replace or machine the disc.* |
| | Parallelism not within specifications | *Check per instructions. If not with specifications, replace or machine the disc.* |
| | Rear drums out of round | *Check runout. Repair or replace drum as necessary.* |
| ***Braking noise*** | Glazed shoe linings, or foreign matters stuck to linings | *Repair or replace shoe lining.* |
| | Worn or distorted shoe linings | *Replace shoe lining (or pad).* |
| | Loose front wheel bearings | *Replace wheel bearing.* |
| | Distorted backing plates or loose mounting bolts | *Replace or retighten securing bolts.* |
| ***Brake warning light turns ON after engine start*** | Parking brake applied | *Release parking brake and check that brake warning light turns off.* |
| | Insufficient amount of brake fluid | *Add brake fluid.* |
| | Brake fluid leaking from brake line | *Investigate leaky point, correct it and add brake fluid.* |
| | Brake warning light circuit faulty | *Repair circuit.* |
| | Malfunctioning EBD system, if equipped with ABS | *Check system referring to "ABS Check: in Section 4E".* |
| ***Brake warning light turns on when brake is applied*** | Brake fluid leaking from brake line | *Investigate leaky point, correct it and add brake fluid.* |
| | Insufficient amount of brake fluid | *Add brake fluid.* |
| ***Brake warning light fails to turn on even when parking brake is applied*** | Bulb burnt out | *Replace bulb.* |
| | Brake warning light circuit open | *Repair circuit.* |
| ***ABS warning light does not turn ON for 2 – 3 sec. after ignition switch has turned ON*** | Bulb burnt out | *Replace bulb.* |
| | ABS warning light circuit open (including check relay) | *Repair or replace.* |
| | Malfunctioning ABS | *Check system referring to "ABS Warning Lamp Does Not Come ON at Ignition Switch ON: in Section 4E".* |
| ***ABS warning light remains ON after ignition switch has turned ON for 2 – 3 sec.*** | Malfunctioning ABS | *Check system referring to "ABS Warning Lamp Comes ON Steady: in Section 4E".* |

www.cargeek.ir

 www.CarGeek.ir

# Repair Instructions

## Excessive Pedal Travel Check

S5JB0A4106001

1) Start engine.
2) Depress brake pedal a few times.
3) With brake pedal depressed with approximately 30 kg (66 lbs) load, measure pedal to carpet clearance "c".
   If clearance "c" is less than specification, the most possible cause is either rear brake shoes are worn out beyond limit or air is in lines.
   Should clearance "c" remain less than specification even after replacement of brake shoes and bleeding of system, other possible but infrequent cause is malfunction of rear brake shoe adjusters or booster push rod length out of adjustment.

**Clearance "c" between brake pedal (with depressed) and carpet**
**"c": Over 70 mm (2.75 in.)**

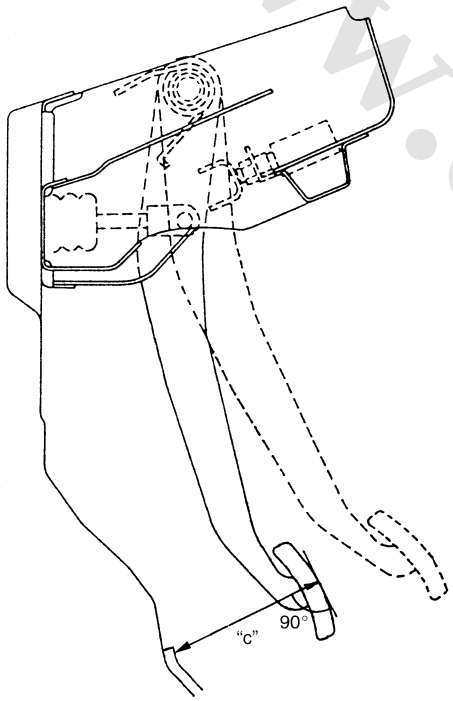


IYSQ01410009-01

## Brake Pedal Play Check

S5JB0A4106002

Pedal play should be within specification. If out of specification, check brake light switch for proper installation position and adjust if necessary.
Also check pedal shaft bolt and master cylinder pin installation for looseness and replace if defective.

**Brake pedal play**
**"d": 1 – 8 mm (0.04 – 0.32 in.)**

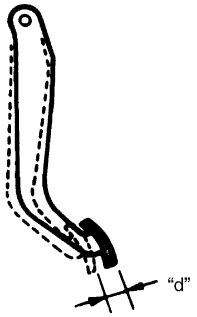


IYSQ01410010-01

## Brake Fluid Level Check

S5JB0A4106003

Be sure to use particular brake fluid either as indicated on reservoir cap of that vehicle or recommended in owner's manual which comes along with that vehicle.
Use of any other fluid is strictly prohibited.
Fluid level should be between MIN and MAX lines marked on reservoir.
When warning light lights sometimes during driving, replenish fluid to MAX line.
When fluid decreases quickly, inspect brake system for leakage. Correct leaky points and then refill to specified level.

**⚠ CAUTION**

**Do not use shock absorber fluid or any other fluid which contains mineral oil. Do not use a container which has been used for mineral oil or a container which is wet from water. Mineral oil will cause swelling and distortion of rubber parts in hydraulic brake system and water mixed into brake fluid will lower fluid boiling point. Keep all fluid containers capped to prevent contamination.**

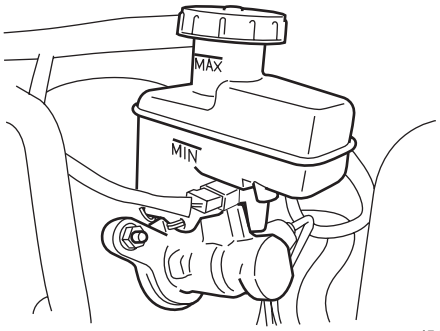


I5JB0A410005-01

www.cargeek.ir

## Air Bleeding of Brake System

S5JB0A4106004

**⚠ CAUTION**

**Brake fluid is extremely damaging to paint. If fluid should accidentally touch painted surface, immediately wipe fluid from paint and clean painted surface.**

Bleeding operation is necessary to remove air whenever it entered hydraulic rake system.
Hydraulic lines of brake system are based on the diagonal split system. When a brake pipe or hose was disconnected at the wheel, bleeding operation must be performed at both ends of the line of the removed pipe or hose. When any joint part of the master cylinder of other joint part between the master cylinder and each brake (wheel) was removed, the hydraulic brake system must be bled at all 4 wheel brakes.

**NOTE**

**Perform bleeding operation starting with wheel cylinder farthest from master cylinder and then at front caliper of the same brake line. Do the same on the other brake line.**

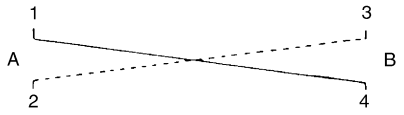


I2RH01410013-01

| | |
|---|---|
| 1. Right brake caliper | 4. Left wheel cylinder |
| 2. Left brake caliper | [A]: FRONT |
| 3. Right wheel cylinder | [B]: REAR |

1) Fill master cylinder reservoir with specified brake fluid and keep at least one-half full of fluid during bleeding operation.
2) Remove bleeder plug cap.
   Attach a vinyl tube (1) to bleeder plug of wheel cylinder, and insert the other end into container (2).

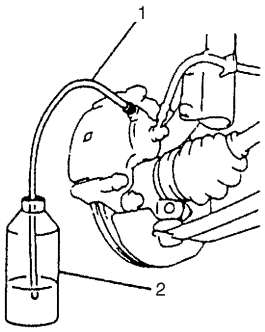


I2RH01410015-01

3) Depress brake pedal several times, and then while holding it depressed, loosen bleeder plug about one-third to one half turn.

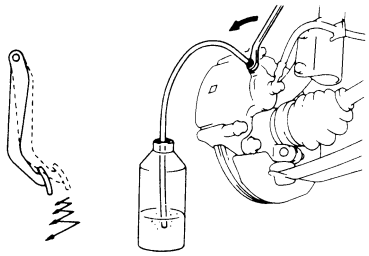

I2RH01410016-01

4) When fluid pressure in the cylinder is almost depleted, retighten bleeder plug.

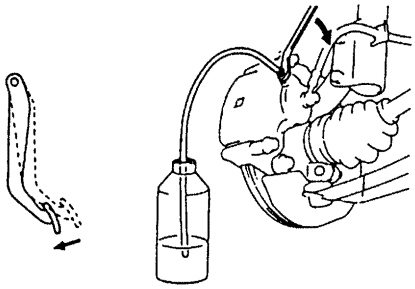

I2RH01410017-01

5) Repeat this operation until there are no more air bubbles in hydraulic line.
6) When bubbles stop, depress and hold brake pedal and tighten bleeder plug.

   **Tightening torque**
   **Front brake caliper bleeder plug: 7 N·m (0.7 kgf-m, 5.0 lb-ft)**
   **Rear wheel cylinder bleeder plug: 7 N·m (0.7 kgf-m, 5.0 lb-ft)**

7) Then attach bleeder plug cap.
8) After completing bleeding operation, apply fluid pressure to pipe line and check for leakage.
9) Replenish fluid into reservoir up to “MAX” level.

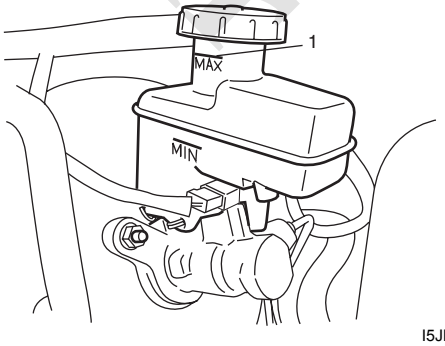


I5JB0A410006-01

| |
|---|
| 1. MAX level mark |

10) Check brake pedal for “sponginess”. If found spongy, repeat entire procedure of bleeding.

 www.CarGeek.ir

## Brake Pedal Free Height Adjustment

S5JB0A4106005

Measure brake pedal free height between pedal and carpet installed on dash panel.
If the measurement is not within the specification, check the position of booster push rod clevis and/or brake light switch, referring to, “Master Cylinder Assembly Inspection: ”, “Booster Push Rod Clevis Adjustment: ” and/or “Brake Light Switch Adjustment: ”. The free height varies depending on installation position of booster push rod clevis and stop light switch.

**Brake pedal free height “a” from carpet**
**“a”: 131 – 141 mm (5.16 – 5.55 in.)**

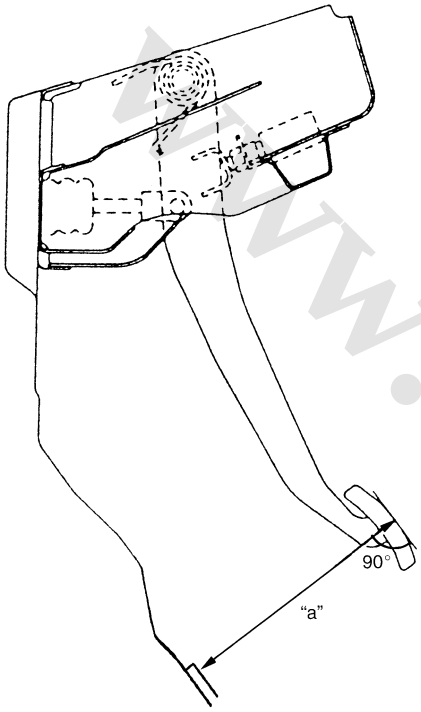


IYSQ01410007-01

## Brake Light Switch Adjustment

S5JB0A4106006

**⚠ CAUTION**

**Do not apply any oil or grease (including rust preventives, lubricant, etc.) to following sections.**
*** Stop light switch (1) (including its tip end)**
*** Switch (1) contacting section of brake pedal stay (3)**
**Oil or grease, if applied, will enter the contact point in the switch, causing contact failure. Also, when checking, adjusting or replacing brake switch, check that no oil or grease is attached to switch contacting section on brake pedal side or tip end of switch.**
**Wipe off oil or grease being attached.**

Adjustment should be made as follows when installing switch (1). Pull up brake pedal toward you and while holding it there, adjust switch position so that clearance between end of switch thread (2) and brake pedal stay (3).

**Clearance “b” between end of thread and brake pedal stay**
**“b”: 1.5 – 2.5 mm (0.06 – 0.10 in.)**

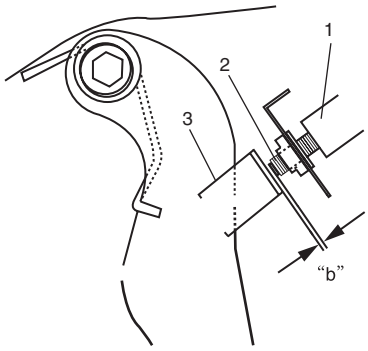


I3JA01410004-01

## Brake Flexible Hose and Pipe Check

S5JB0A4106007

The brake hose assembly should be checked for road hazard damage, for cracks and chafing of the flexible hose, for leaks and blisters. A light and mirror may be needed for an adequate inspection. If any of the above conditions are observed on the brake flexible hose, it is necessary to replace it.
Inspect the pipe for damage, cracks, dents and corrosion. If any defect is found, replace it.

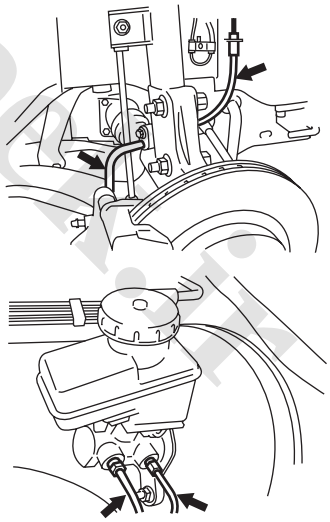

I5JB0A410007-01

## Master Cylinder Check

S5JB0A4106008

Check for a cracked master cylinder casting or brake fluid around the master cylinder. Leaks are indicated only if there is at least a drop of fluid. A damp condition is not abnormal.

www.cargeek.ir

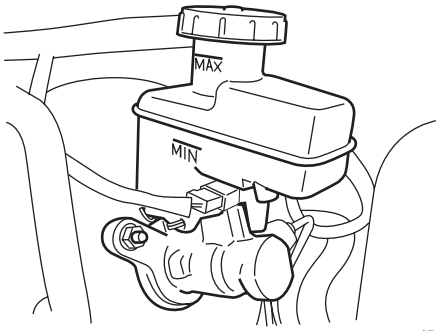


I5JB0A410005-01

## Flushing Brake Hydraulic System

S5JB0A4106009

It is recommended that entire hydraulic system be thoroughly flushed with clean brake fluid whenever new parts are installed in hydraulic system.
Periodical change of brake fluid is also recommended.

## Booster Operation Check

S5JB0A4106010

There are two ways to perform this inspection, with and without a tester. Ordinarily, it is possible to roughly determine its condition without using a tester.

**NOTE**

**For this check, make sure that no air is in hydraulic line.**

### Inspection without Tester

#### Check air tightness

1) Start engine.
2) Stop engine after running for 1 to 2 minutes.
3) Depress brake pedal several times with the same load as in ordinary braking and observe pedal travel. If pedal goes down deep the first time but its travel decreases as it is depressed the second and more times, air tightness is obtained.

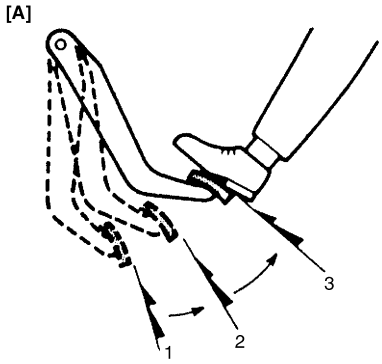


I5JB0A410008-01

| | |
|---|---|
| [A]: Good | 2. 2nd |
| 1. 1st | 3. 3rd |

4) If pedal travel doesn't change, air tightness isn't obtained.

**NOTE**

**If defective, inspect vacuum lines and sealing parts, and replace any faulty part.**
**When this has been done, repeat the entire test.**

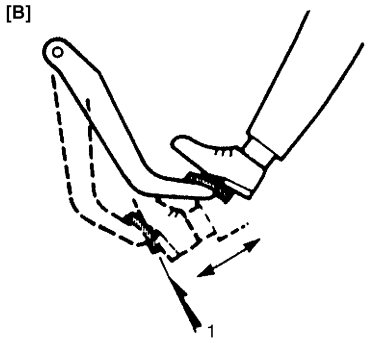


I5JB0A410009-01

| | |
|---|---|
| [B]: No Good | 1. 1st, 2nd, 3rd |

#### Check operation

1) With engine stopped, depress brake pedal several times with the same load and make sure that pedal travel doesn't change.

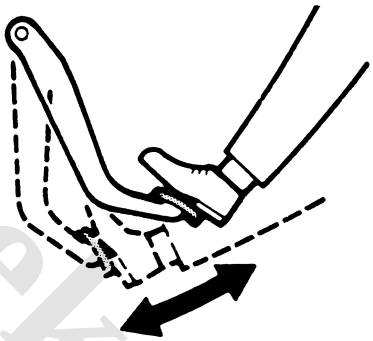

IYSQ01410018-01

2) Start engine while depressing brake pedal. If pedal travel increases a little, operation is satisfactory. But no change in pedal travel indicates malfunction.

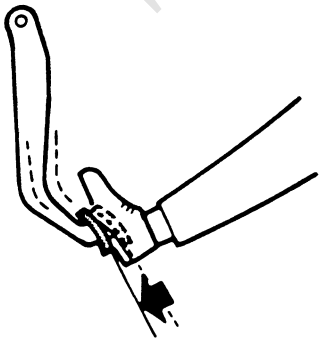

IYSQ01410019-01

www.cargeek.ir

### Check air tightness under load

1) With engine running, depress brake pedal. Then stop engine while holding brake pedal depressed.

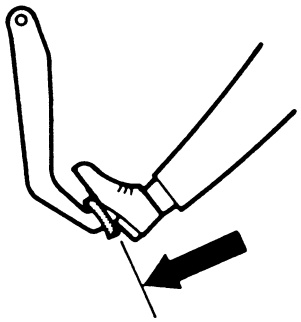

IYSQ01410020-01

2) Hold brake pedal depressed for 30 seconds. If pedal height does not change, condition is good. But it isn't if pedal rises.

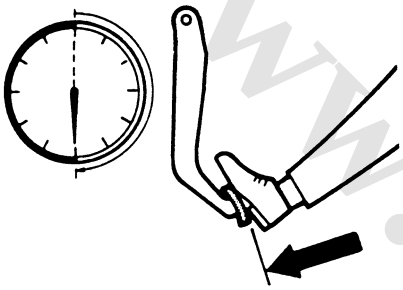

IYSQ01410021-01

## Front Brake Hose / Pipe Removal and Installation

S5JB0A4106011

**⚠ CAUTION**

**Do not allow brake fluid to get on painted surfaces. Painted surfaces will be damaged by brake fluid, flush it with water immediately if any fluid is spilled.**

### Removal

1) Raise and support vehicle properly. Remove tire and wheel.

**NOTE**

**This operation is not necessary when removing pipes connecting master cylinder.**

2) Clean dirt and foreign material from both flexible hose end and pipe end fittings.
3) Drain brake fluid in reservoir.
4) Remove brake flexible hose or pipe.

### Installation

Reverse brake flexible hose removal procedure, noting the following.

- Make sure that steering wheel is in straight-forward position and flexible hose has not twist or kink.
- Check to make sure that flexible hose doesn't contact any part of suspension, both in extreme right and extreme left turn conditions.
  If it does at any point, remove and correct. Fill and maintain brake fluid level in reservoir.
- Bleed brake system. Refer to "Air Bleeding of Brake System: ".
- Perform brake test and check installed part for fluid leakage.

## Rear Brake Hose / Pipe Removal and Installation

S5JB0A4106012

**⚠ CAUTION**

**Do not allow brake fluid to get on painted surfaces. Painted surfaces will be damaged by brake fluid, flush it with water immediately if any fluid is spilled.**

### Removal

1) Raise and support vehicle properly. Remove tire and wheel.
2) Clean dirt and foreign material from both flexible hose end and pipe end fittings.
3) Drain brake fluid in reservoir.
4) Remove brake flexible hose or pipe.

### Installation

Reverse brake flexible hose removal procedure, noting the following.

- Fill and maintain brake fluid level in reservoir.
- Bleed brake system. Refer to "Air Bleeding of Brake System: ".
- Perform brake test and check each installed part for fluid leakage.
- Install clamps properly referring to the figure and tighten bolts.
- When installing hose, make sure that it has no twist or kink.

www.cargeek.ir

## Master Cylinder Components

S5JB0A4106026

**⚠ CAUTION**

**Never disassemble master cylinder. Disassembly will spoil its original function. If faulty condition is found, replace it with new one as an assembly.**

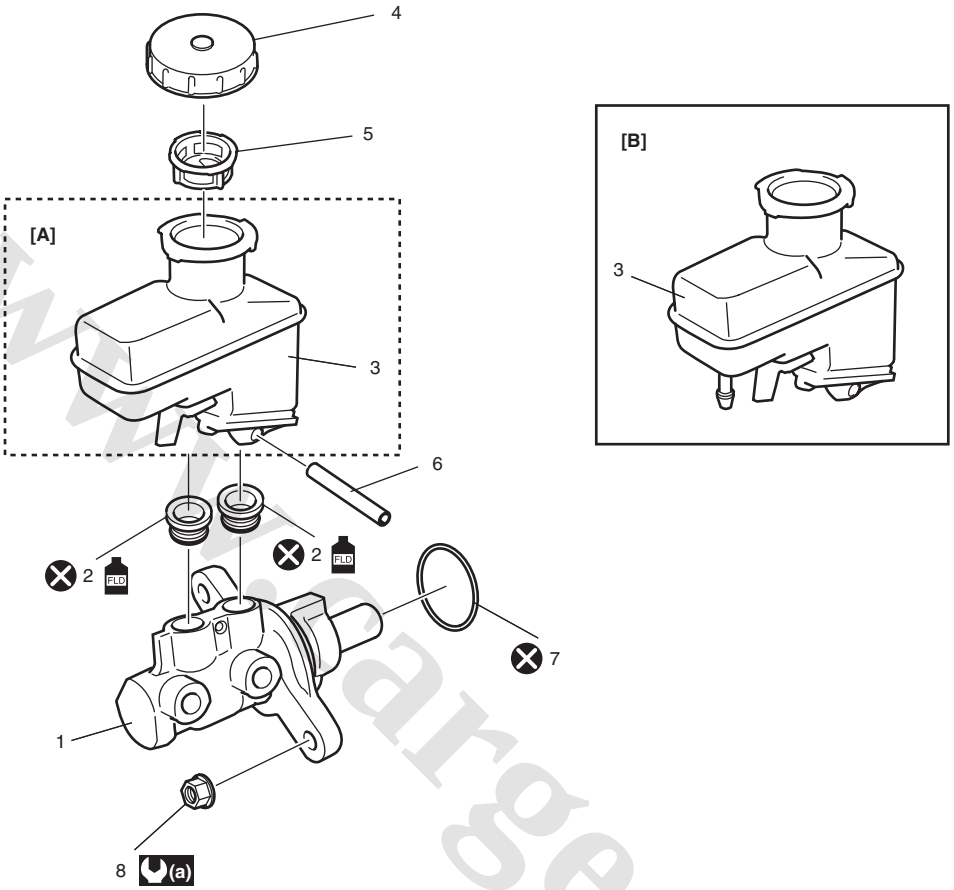


I5JB0A410010-01

| | | | |
|---|---|---|---|
| [A]: A/T vehicle | 2. Grommet<br>: Apply brake fluid. | 5. Filter | 8. Master cylinder fixing nut |
| [B]: M/T vehicle | 3. Reservoir | 6. Reservoir connector pin | (a) : 18 N·m (1.8 kgf-m, 13.0 lb-ft) |
| 1. Master cylinder body | 4. Reservoir cap | 7. O-ring | : Do not reuse. |

www.cargeek.ir

## Master Cylinder Reservoir Removal and Installation

S5JB0A4106013

**⚠ CAUTION**

**Do not allow brake fluid to get on painted surfaces. Painted surfaces will be damaged by brake fluid, flush it with water immediately if any fluid is spilled.**

### Removal

1) Disconnect reservoir lead wire at coupler (1).
2) Clean outside of reservoir (2) and master cylinder (3).

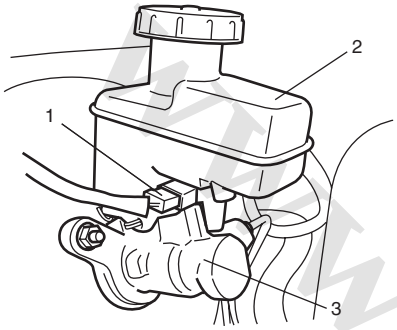


I5JB0A410011-02

3) Take out fluid with syringe or such.
4) Disconnect clutch reservoir hose (1) from reservoir (2) for M/T vehicle.

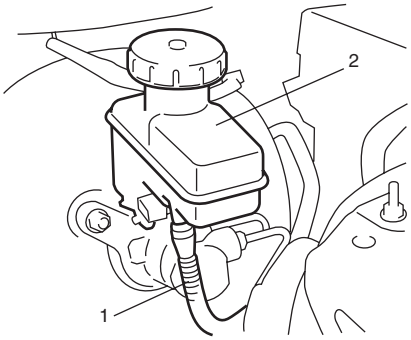


I5JB0A410012-02

5) Remove reservoir connector pin (1) by using special tool and then reservoir.

**Special tool**
**(A): 09916–44310**

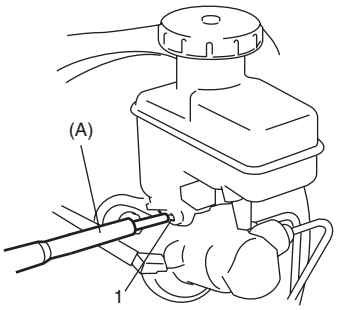


I5JB0A410013-02

### Installation

1) When using new grommets (3), lubricate them with the same fluid as the one to fill reservoir (1) with. Then press-fit grommets (3) to master cylinder (2). Grommets (3) must be seated in place.

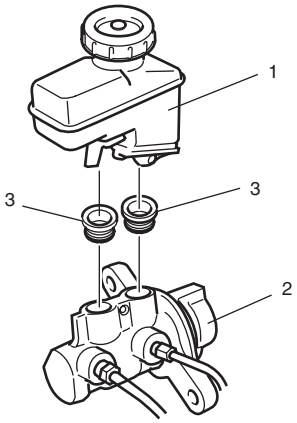


I5JB0A410014-01

2) Install reservoir (1) and drive in reservoir connector pin (2) by using special tool (A). till both of its ends at the right and left of reservoir becomes the same length.

**Special tool**
**(A): 09916–44310**

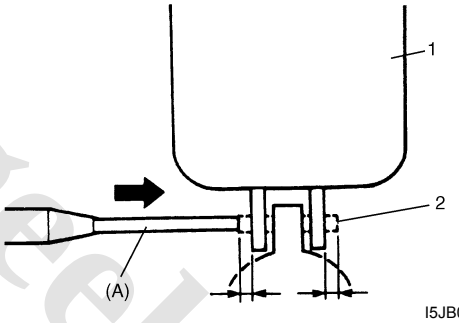


I5JB0A410015-01

3) Connect clutch reservoir hose (1) to reservoir (2) for M/T vehicle.

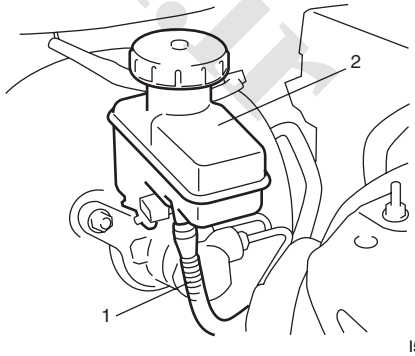


I5JB0A410012-02

4) Connect reservoir lead wire at coupler.
5) Fill reservoir with specified fluid.
6) After installing, bleed air from clutch system, referring to “Air Bleeding of Brake System: ”.
7) Upon completion of installation, check for fluid leakage.

www.cargeek.ir

## Master Cylinder Assembly Removal and Installation

S5JB0A4106014

**⚠ CAUTION**

- **Never disassemble master cylinder. Disassembly will spoil its original function. If faulty condition is found, replace it with new one as an assembly.**
- **Do not allow brake fluid to get on painted surfaces. Painted surfaces will be damaged by brake fluid, flush it with water immediately if any fluid is spilled.**

### Removal

1) Disconnect reservoir lead wire at coupler (1).

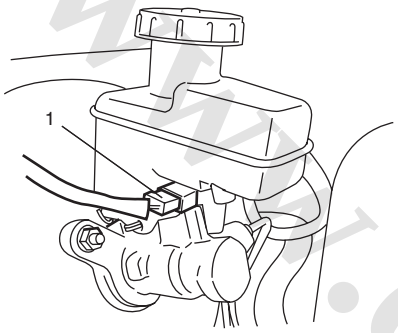


I5JB0A410016-02

2) Clean outside of master cylinder and take out fluid with syringe or such.
3) Disconnect clutch reservoir hose (1) from reservoir (2) for M/T vehicle.

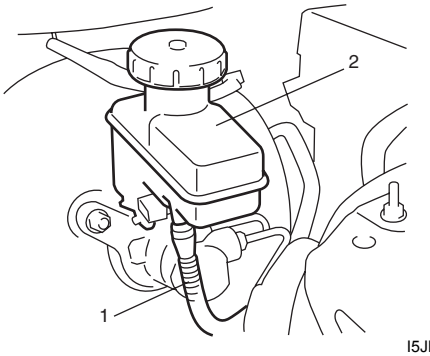


I5JB0A410012-02

4) Loosen brake pipe flare nuts (2) for master cylinder (1).
5) Disconnect brake pipes (3) from master cylinder (1).

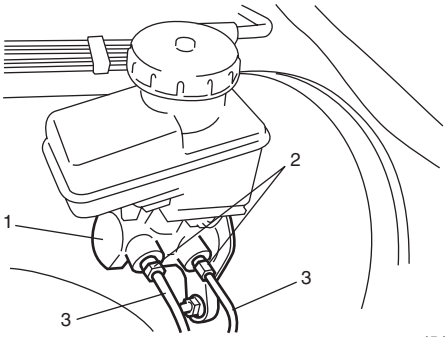


I5JB0A410017-01

6) Loosen master cylinder fixing nuts (1) and then remove master cylinder (2) with reservoir (3) from brake booster (4).

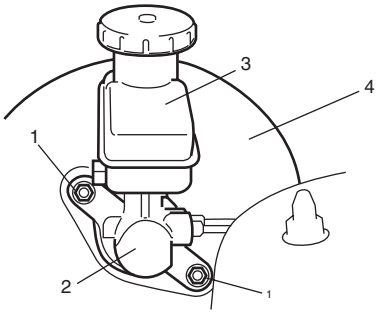


I5JB0A410018-02

### Installation

1) Install new master cylinder O-ring (1) to master cylinder.
2) Install master cylinder (2) with reservoir (3) to brake booster (4).

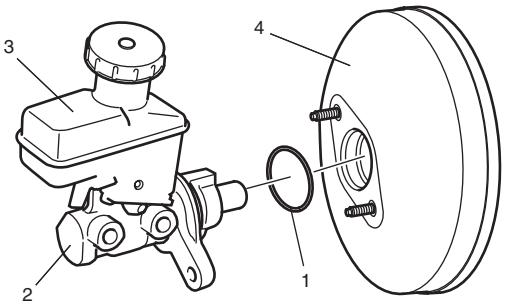


I5JB0A410019-01

3) Tighten master cylinder fixing nuts (1) to specified torque.

**Tightening torque**
**Master cylinder fixing nut (a): 18 N·m (1.8 kgf-m, 13.0 lb-ft)**

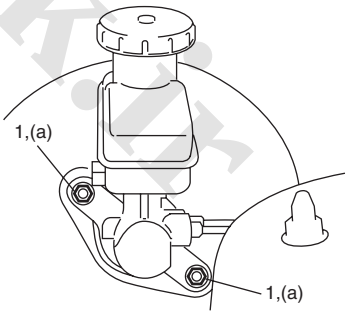


I5JB0A410021-02

www.cargeek.ir

4) Connect brake pipes to master cylinder and tighten brake pipe flare nuts (1) to specified torque.

**Tightening torque**
**Brake pipe flare nut (a): 16 N·m (1.6 kgf-m, 12.0 lb-ft)**

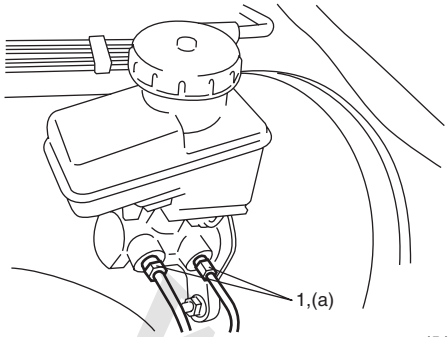


I5JB0A410020-01

5) Connect clutch reservoir hose (1) to reservoir (2) for M/T vehicle.

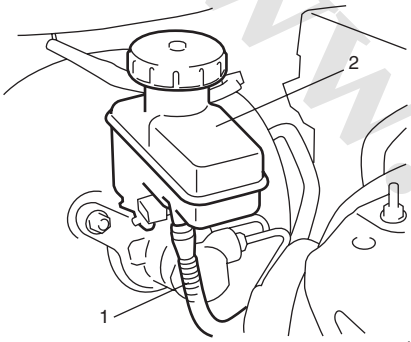


I5JB0A410012-02

6) Connect reservoir lead wire at coupler.
7) Fill reservoir with specified brake fluid.
8) After installing, check brake pedal play and bleed air from brake and clutch system, referring to “Brake Pedal Play Check: ” and “Air Bleeding of Brake System: ”.
9) Perform brake test and check each installed part for fluid leakage.

## Master Cylinder Assembly Inspection

S5JB0A4106017

- Check master cylinder for corrosion and smooth operation.
- Inspect distance “a” to be the following.
  If measurement is out of specification, replace master cylinder assembly.

**Distance**
**“a”: 72.0 mm (2.83 in.) or more**

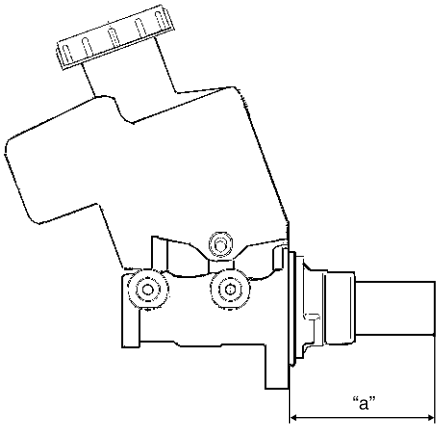


I5JB0A410022-01

www.cargeek.ir

## Brake Booster Components

S5JB0A4106018

**NOTE**

**The difference between RH steering vehicle and LH steering vehicle booster components is the location of vacuum hose.**

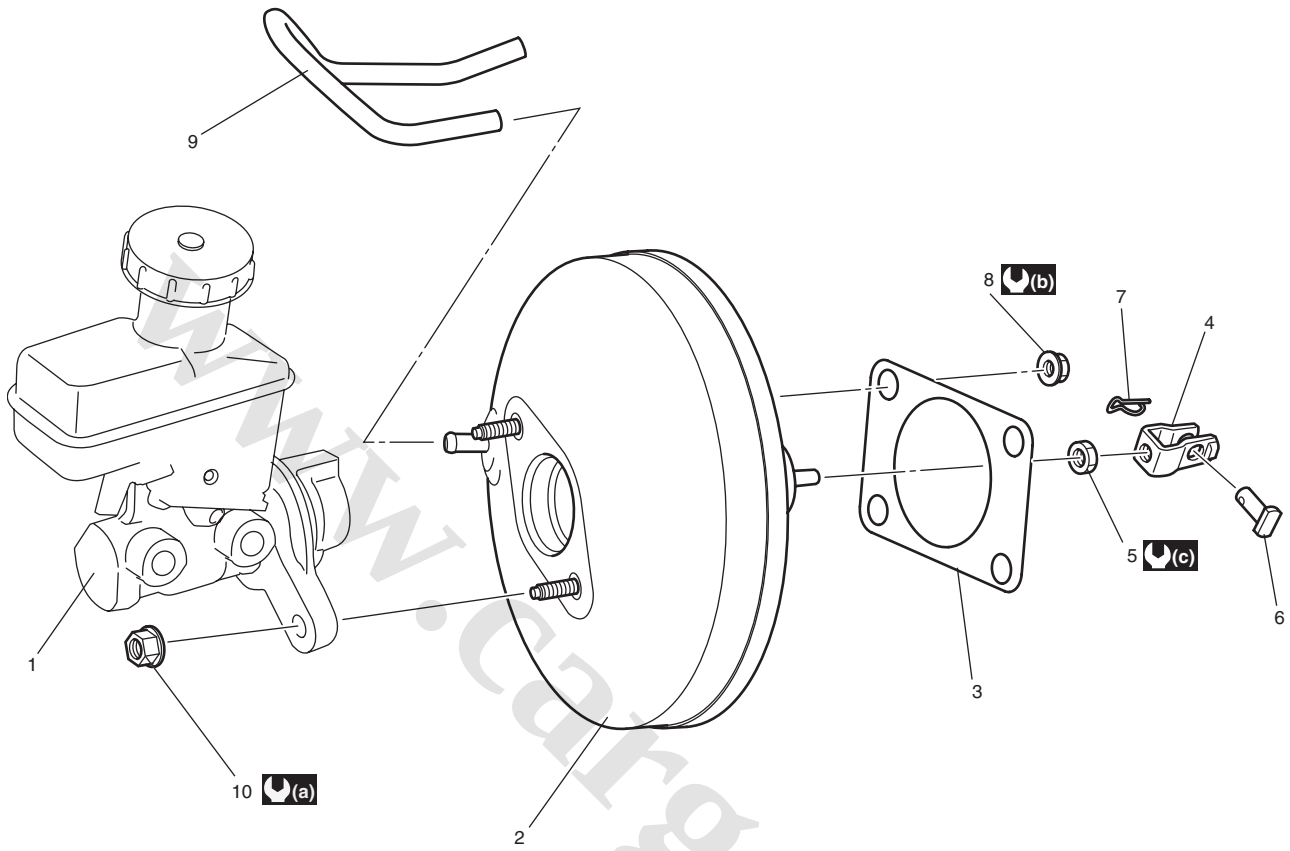


I5JB0A410023-02

| | | | |
|---|---|---|---|
| 1. Brake master cylinder assembly | 5. Clevis pin lock nut | 9. Brake vacuum hose | (c) : 26 N·m (2.6 kgf-m, 19.0 lb-ft) |
| 2. Brake booster assembly | 6. Clevis pin | 10. Master cylinder fixing nut | |
| 3. Gasket | 7. Clip | (a) : 18 N·m (1.8 kgf-m, 13.0 lb-ft) | |
| 4. Push rod clevis | 8. Booster attaching nut | (b) : 13 N·m (1.3 kgf-m, 9.5 lb-ft) | |

www.cargeek.ir

## Brake Booster Removal and Installation

S5JB0A4106020

### Removal

1) Disconnect brake pipes from ABS actuator if equipped.
2) Remove master cylinder assembly, referring to “Master Cylinder Assembly Removal and Installation: ”.
3) Disconnect brake vacuum hose from brake booster.
4) Remove clip (2) and the disconnect clevis pin (3).
5) Remove attaching nuts (1) and then remove booster as shown in the figure.

**⚠ CAUTION**

**Never disassemble brake booster. Disassembly will spoil its original function. If is found faulty, replace it with new one.**

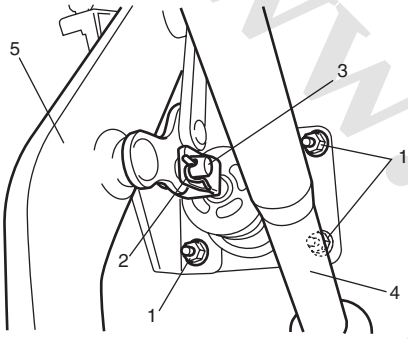


I5JB0A410024-01

| | |
|---|---|
| 4. | Steering column |
| 5. | Brake pedal arm |

### Installation

**NOTE**

- **Check length of push rod clevis (2). Refer to “Booster Push Rod Clevis Adjustment: ”.**

1) Install gasket to booster and then install booster to dash panel as shown in the figure. Then connect booster push rod clevis (2) to pedal arm (3) with clevis pin inserting from left (4) and clip (5).
2) Tighten booster attaching nuts (6) to the specified torque.

**Tightening torque**
**Booster attaching nut (a): 13 N·m (1.3 kgf-m, 9.5 lb-ft)**

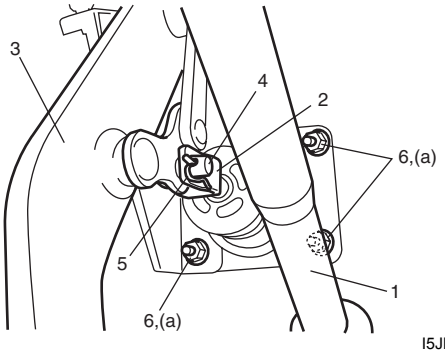


I5JB0A410025-01

| | |
|---|---|
| 1. | Steering column |

3) Connect brake vacuum hose to brake booster.
4) Install master cylinder referring to “Master Cylinder Assembly Removal and Installation: ”.
5) After installing, fill reservoir with specified brake fluid and bleed brake system. Check each installed part for fluid leakage and perform brake test.

## Booster Push Rod Clevis Adjustment

S5JB0A4106023

Install push rod clevis (1) so that measurement “a” is obtained and torque nut (2) to specification.

**Tightening torque**
**Clevis pin lock nut (a): 26 N·m (2.6 kgf-m, 19.0 lb-ft)**

**Clevis installing position (length “a”)**
**“a”: 133.5 – 134.5 mm (5.26 – 5.30 in.)**

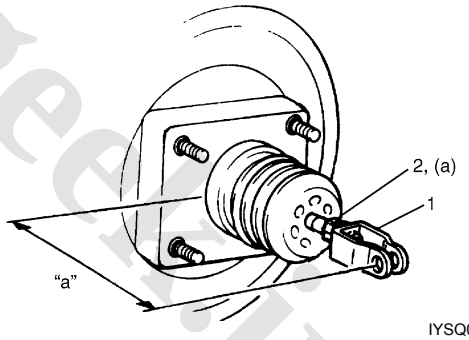


IYSQ01410050-01

www.cargeek.ir

# Specifications

## Tightening Torque Specifications

S5JB0A4107001

| Fastening part | Tightening torque | | | Note |
|---|---|---|---|---|
| | N·m | kgf-m | lb-ft | |
| Front brake caliper bleeder plug | 7 | 0.7 | 5.0 | ☞ |
| Rear wheel cylinder bleeder plug | 7 | 0.7 | 5.0 | ☞ |
| Master cylinder fixing nut | 18 | 1.8 | 13.0 | ☞ |
| Brake pipe flare nut | 16 | 1.6 | 12.0 | ☞ |
| Booster attaching nut | 13 | 1.3 | 9.5 | ☞ |
| Clevis pin lock nut | 26 | 2.6 | 19.0 | ☞ |

**NOTE**

**The specified tightening torque is also described in the following.**
**“Front Brake Hose / Pipe Construction: ”**
**“Master Cylinder Components: ”**
**“Brake Booster Components: ”**

**Reference:**
For the tightening torque of fastener not specified in this section, refer to “Fastener Information: in Section 0A”.

# Special Tools and Equipment

## Recommended Service Material

S5JB0A4108001

**NOTE**

**Required service material is also described in the following.**
**“Master Cylinder Components: ”**

## Special Tool

S5JB0A4108002

| | |
|---|---|
| 09916–44310<br>Valve guide remover (5 mm)<br>☞ / ☞ 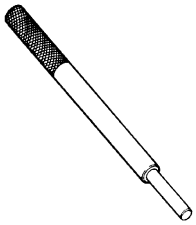 | |

www.cargeek.ir

www.CarGeek.ir

# Front Brakes

## General Description

### Front Disc Brake Caliper Assembly Construction

S5JB0A4201001

This caliper is mounted to the brake caliper carrier with two caliper pin bolts. Hydraulic force, created by applying force to the brake pedal, is converted by the caliper to friction. The hydraulic force acts equally against the piston and the bottom of the caliper bore to move the piston outward and to move (slide) the caliper inward, resulting in a clamping action on the disc. This clamping action forces the pads (linings) against the disc, creating friction to stop the vehicle. For components, refer to “Front Disc Brake Components: ”.

**NOTE**

**Lubricate parts as specified. Do not use lubricated shop air on brake parts as damage to rubber components may result. If any component is removed or line disconnected, bleed the brake system. Replace pads in axle sets only. The torque values specified are for dry, unlubricated fasteners.**

www.cargeek.ir

www.cargeek.ir

www.CarGeek.ir


# Repair Instructions

## Front Disc Brake Components

S5JB0A4206010

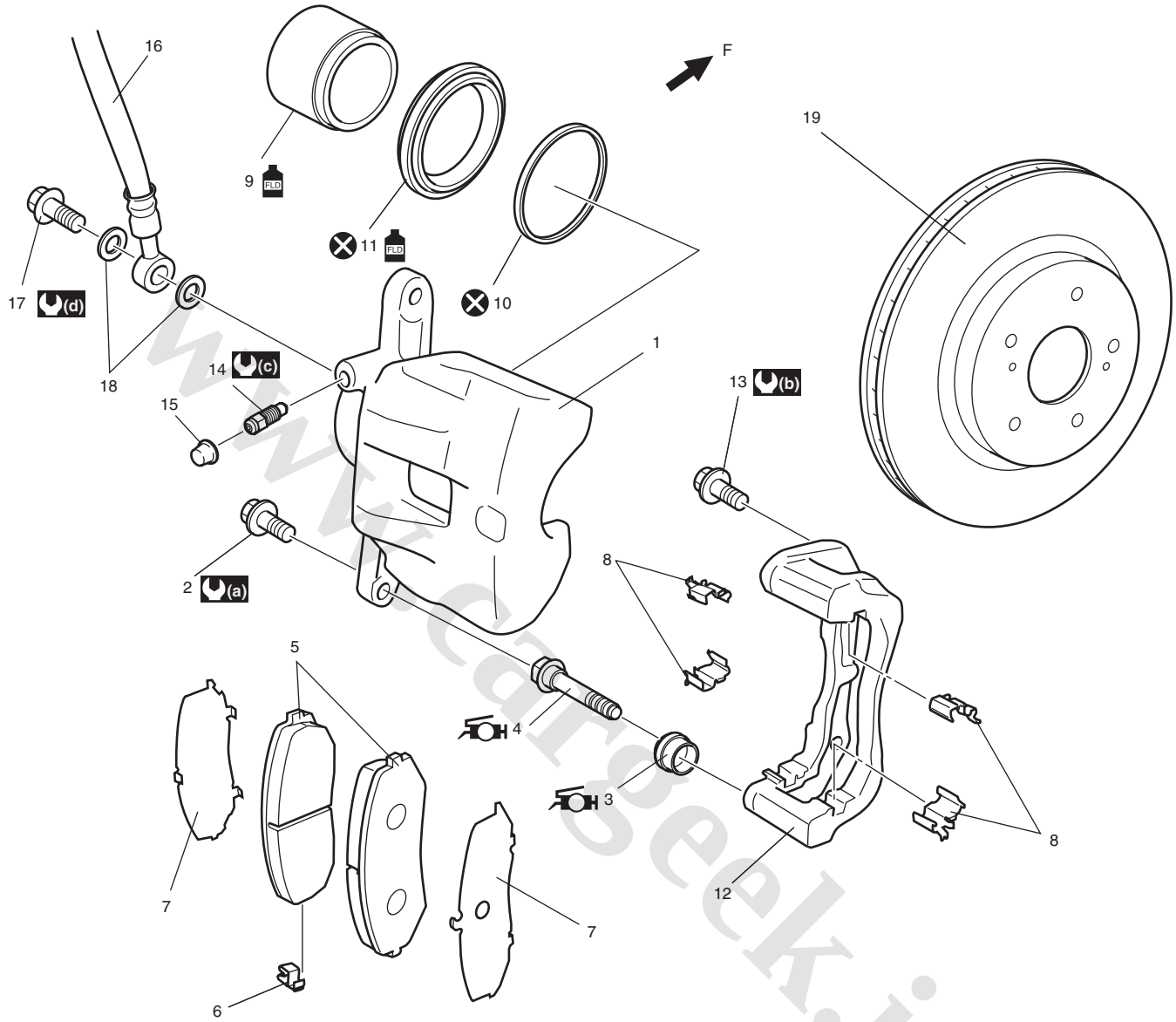


I5JB0A420001-01

| | | |
|---|---|---|
| 1. Caliper | 10. Piston seal<br>: Apply small amount of brake fluid to all around part of piston seal. | 19. Brake disc |
| 2. Caliper pin bolt | 11. Cylinder boot<br>: Apply small amount of brake fluid. | F: Forward |
| 3. Slide pin boot<br>: Apply rubber grease. | 12. Brake caliper carrier | (a) : 36 N·m (3.6 kgf-m, 26.0 lb-ft) |
| 4. Slide pin<br>: Apply rubber grease. | 13. Caliper carrier bolt | (b) : 85 N·m (8.5 kgf-m, 61.5 lb-ft) |
| 5. Brake pad | 14. Front caliper bleeder plug | (c) : 7 N·m (0.7 kgf-m, 5.0 lb-ft) |
| 6. Wear indicator | 15. Bleeder plug cap | (d) : 23 N·m (2.3 kgf-m, 17.0 lb-ft) |
| 7. Shim | 16. Brake flexible hose | : Do not reuse. |
| 8. Pad spring | 17. Flexible hose joint bolt | |
| 9. Disk brake piston<br>: Apply brake fluid to contact surface of cylinder. | 18. Hose washer | |

www.cargeek.ir

www.CarGeek.ir

## Front Disc Brake Pad On-Vehicle Check

S5JB0A4206001

Inspect pad linings periodically according to maintenance schedule whenever wheels are removed (for tire rotation or other reason). Take a look through hole of caliper and check lining thickness of outside and inside pads.
If one of brake pad is worn to service limit, all linings must be replaced at the same time.

**Front brake pad thickness "a"**
**Standard: 11.0 mm (0.43 in.)**
**Limit: 2.0 mm (0.08 in.)**

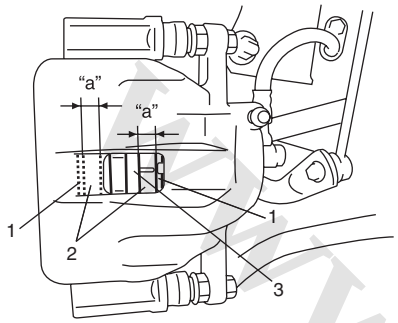


I5JB0A420002-01

| | |
|---|---|
| 1. Pad rim | 3. Disc |
| 2. Lining | |

## Front Disc Brake Pad Removal and Installation

S5JB0A4206002

### Removal

1) Hoist vehicle and remove front wheel.
2) Remove caliper pin bolts (2).

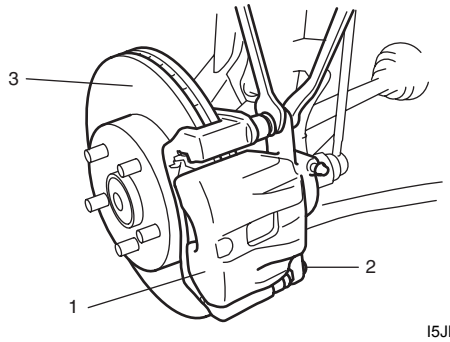


I5JB0A420003-01

| |
|---|
| 1. Caliper |
| 3. Disc |

3) Remove caliper (1) from caliper carrier.

**NOTE**

**Hang removed caliper (1) with a wire hook (2) or the like so as to prevent brake hose from bending and twisting excessively or being pulled. Don't operate brake pedal with pads removed.**

4) Remove pads (3).

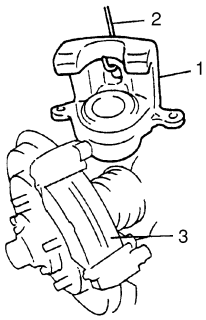


I1SQ01420004-01

### Installation

1) Install pad spring (1) and pads (2).

**NOTE**

**Install brake pad with wear indicator (5) to vehicle center side on right wheel brake.**

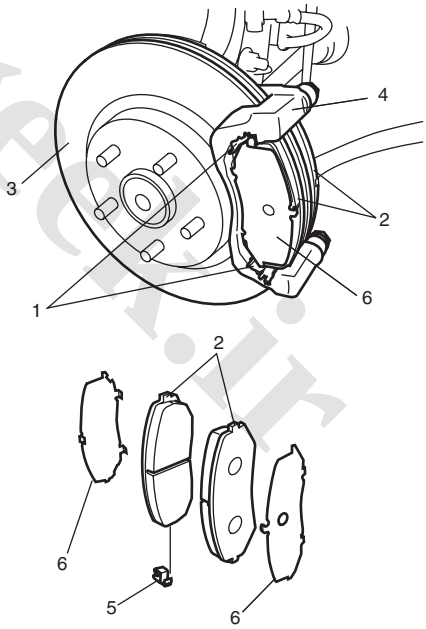


I5JB0A420004-01

| | |
|---|---|
| 3. Disc | 6. Shim |
| 4. Caliper carrier | |

www.cargeek.ir

www.CarGeek.ir


2) Install caliper and tighten caliper (slide) pin bolts (1) to specification.

**NOTE**

**Make sure that boots are fit into groove securely.**

**Tightening torque**
**Caliper pin bolt (a): 36 N·m (3.6 kgf-m, 26.0 lb-ft)**

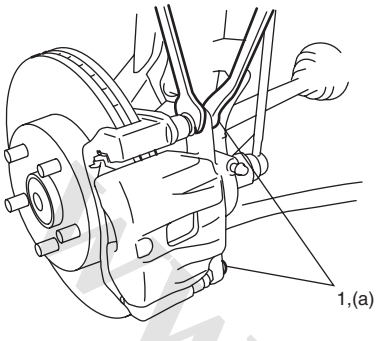

I5JB0A420005-01

3) Tighten front wheel nuts to specification.

**Tightening torque**
**Wheel nut (a): 100 N·m (10.0 kgf-m, 72.5 lb-ft)**

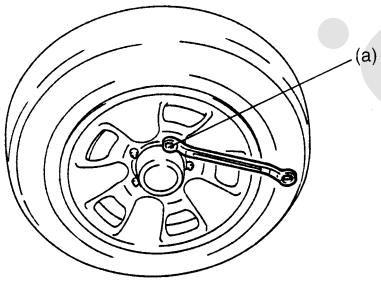

IYSQ01220010-01

4) Upon completion of installation, perform brake test.

## Front Brake Disc and Pad Inspection

S5JB0A4206003

**Brake Pad**
Check pad lining for wear. When wear exceeds limit, replace with new one.

**⚠ CAUTION**

**Never polish pad lining with sandpaper. If lining is polished with sandpaper, hard particles of sandpaper will be deposited in lining and may damage disc. When pad lining requires correction, replace it with a new one.**

**NOTE**

**When pads are removed, visually inspect caliper for brake fluid leak. Correct leaky point, if any.**

**Front disc brake pad thickness (lining thickness)**
**Standard: 11.0 mm (0.43 in.)**
**Limit: 2.0 mm (0.08 in.)**

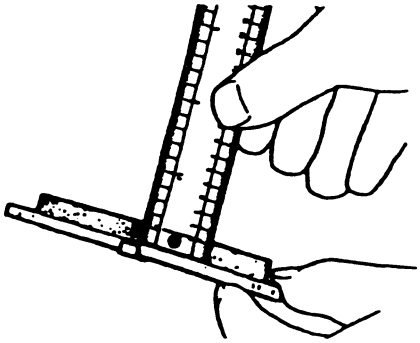
I2RH01420005-01

**Brake Disc**
Before this inspection, brake pads must be removed. Check disc surface for scratches in wearing parts. Scratches on disc surface noticed at the time of specified inspection or replacement are normal and disc is not defective unless they are serious.
But when there are deep scratches or scratches all over disc surface, replace it. When only one side is scratched, polish and correct that side.

**Front brake disc thickness "a"**
**Standard: 25 mm (1.020 in.)**
**Limit: 23 mm (0.905 in.)**

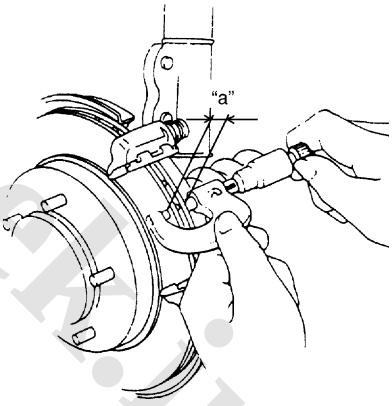

IYSQ01420008-01

Use wheel nuts (1) and suitable plain washers (2) to hold the disc securely against the hub, then mount a dial gauge (3) as shown in the figure and measure the runout at 25 mm (0.98 in.) from the outer edge of the disc.

**NOTE**

**Check front wheel bearing for looseness before measurement.**

www.cargeek.ir

www.CarGeek.ir

**Front brake disc deflection**
**Limit: 0.1 mm (0.004 in.)**

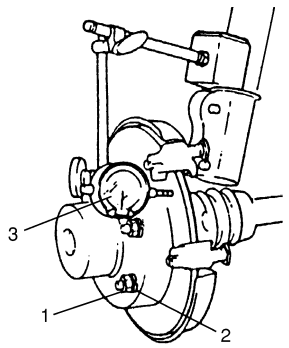

IYSQ01420009-01

**Slide Pin Bolt / Cylinder Slide Pin**
Check slide pin (bolt) for smooth movement as shown in the figure.
If it is found faulty, correct or replace. Apply rubber grease to slide pin (bolt) outer surface. Rubber grease should be the on whose viscosity is less affected by such low temperature a –40 °C (–40 °F).

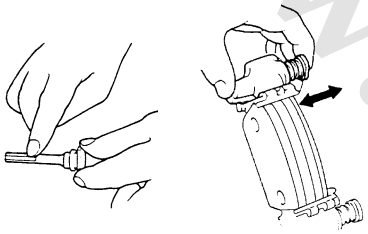
IYSQ01420021-01

**Dust Boot**
Check boot for breakage, crack and damage. If defective, replace.

## Front Disc Brake Caliper Removal and Installation

S5JB0A4206005

**Removal**

1) Hoist vehicle and remove front wheel.
2) Remove brake flexible hose mounting bolt (1) from caliper (2). As this will allow fluid to flow out of hose (3), have a container ready beforehand.

**⚠ CAUTION**

**Be careful not to twist flexible hose while loosening the bolt.**

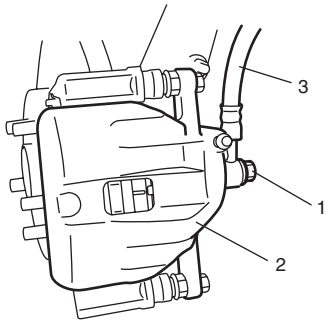

I5JB0A420006-01

3) Remove caliper pin bolts (1).
4) Remove caliper (2).

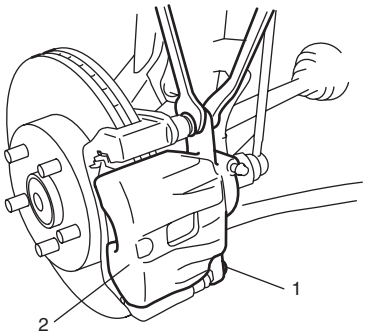

I5JB0A420007-01

**Installation**

1) Apply rubber grease to slide pin, then install caliper to caliper carrier.

**NOTE**

**Use rubber grease whose viscosity varies very little even at –40 °C (–40 °F) if applied.**

2) Tighten caliper pin bolts (1) to specifications.

**NOTE**

**Make sure that boots are fit into groove securely.**

**Tightening torque**
**Caliper pin bolt (a): 36 N·m (3.6 kgf-m, 26.0 lb-ft)**

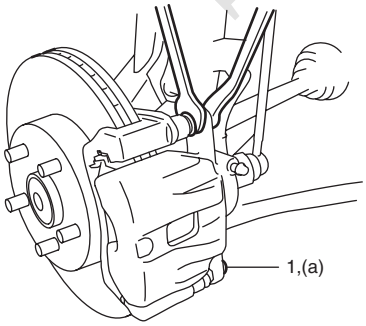

I5JB0A420008-01

www.cargeek.ir

www.CarGeek.ir


3) Install brake flexible hose as shown and tighten flexible hose joint bolt (1) to specification.

**Tightening torque**
**Flexible hose joint bolt (a): 23 N·m (2.3 kgf-m, 17.0 lb-ft)**

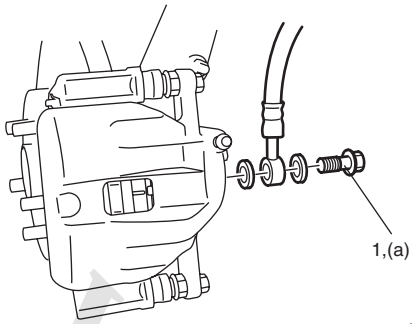


I5JB0A420009-01

4) Tighten front wheel nuts to specification.

**Tightening torque**
**Wheel nut (a): 100 N·m (10.0 kgf-m, 72.5 lb-ft)**

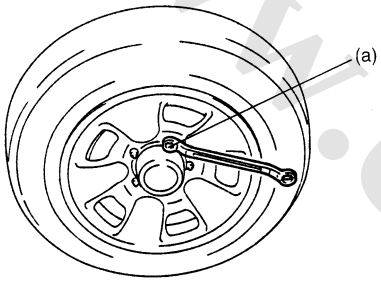


IYSQ01220010-01

5) After completing installation, fill reservoir with specified brake fluid and bleed brake system. Check each installed part for oil leakage and perform brake test.

## Front Disc Brake Caliper Disassembly and Assembly

S5JB0A4206006

### Disassembly

**NOTE**

**Before disassembly, clean all around caliper with brake fluid.**

1) Remove disc brake piston with air blown into flexible hose joint bolt installation hole.

**⚠ WARNING**

**Do not apply too highly compressed air which will cause piston to jump out of cylinder. Place a cloth (1) to prevent piston from damage, it should be taken out gradually with moderately compressed air. Do not place your fingers in front of piston when using compressed air.**

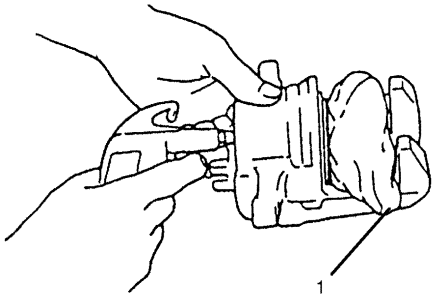


I2RH01420011-01

2) Remove cylinder boot.

**⚠ CAUTION**

**Be careful not to damage inside (bore side) of cylinder.**

3) Remove piston seal using a thin blade like a thickness gauge, etc.

**⚠ CAUTION**

**Be careful not to damage inside (bore side) of cylinder.**

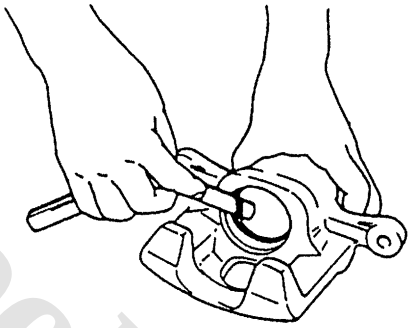

I2RH01420013-01

4) Remove bleeder plug and cap from caliper.

### Assembly

Reassemble front brake in reverse order of disassembly, noting the following points.

**⚠ CAUTION**

- **Wash each part cleanly before installation in the same fluid as the one used in master cylinder reservoir.**
- **Never use other fluid or thinner.**
- **Before installing piston and cylinder boot to cylinder, apply fluid to them.**
- **After reassembling brake lines, bleed air from them.**
- **Before installing piston to cylinder, apply rubber grease to inside (bore side) of cylinder.**

www.cargeek.ir

www.CarGeek.ir

**Piston seal**
Piston seal is used to seal piston and cylinder and to adjust clearance between pad and disc. Replace with a new one at every overhaul. Fit piston seal into groove in cylinder taking care not to twist it.

**Piston and boot**

1) Before inserting piston (1) into cylinder, apply brake fluid to new cylinder boot (a) and piston (1). Install cylinder boot onto piston as shown in the figure.

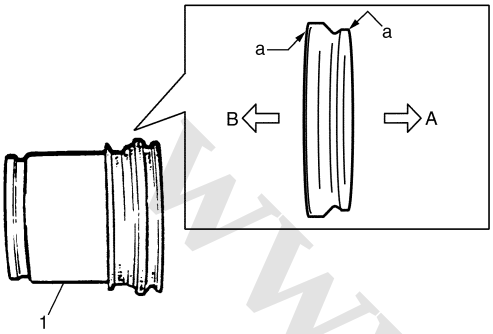


I4RS0B420015-01

| | |
|---|---|
| A: | 1 grooved side directed cylinder side |
| B: | 2 grooved side directed cylinder pad side |

2) Fit boot as it is in above figure into boot groove in cylinder with fingers.

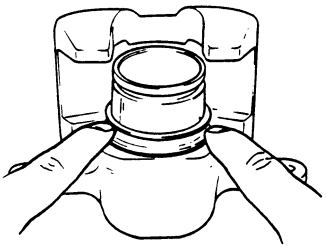

I2RH01420019-01

3) Insert piston into cylinder by hand and fit boot in boot groove in piston.

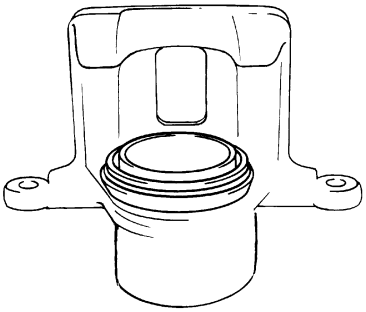

I2RH01420020-01

4) To confirm that boot is fitted in its groove in cylinder properly, pull piston out of cylinder a little but do not take it all out.

**NOTE**

**Boot's face (1) should be at the same level from cylinder's face (2) all around.**

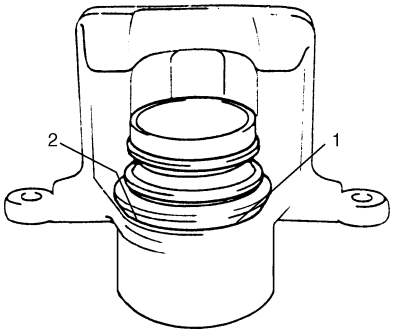


I4RS0A420004-01

5) Install piston into cylinder by hand.

**Caliper**
Before installing caliper (cylinder body) to carrier, check to ensure that guide pin (pin bolt) inserted in each caliper carrier hole can be moved smoothly in thrust direction.

**NOTE**

**Where temperature gets as low as –30 °C in cold weather, use rubber grease whose viscosity varies very little even at –40 °C (–40 °F).**

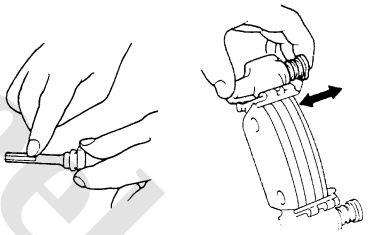

IYSQ01420021-01

## Front Disc Brake Caliper Inspection

S5JB0A4206007

**Cylinder Boot**
Check boots for breakage, crack and damage. If defective, replace.

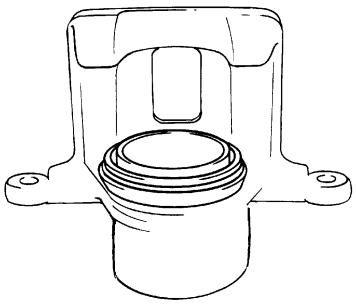

IYSQ01420022-01

www.cargeek.ir

www.CarGeek.ir


**Piston Seal**

Excessive or uneven wear of pad lining may indicate unsmooth return of the piston. In such a case, replace rubber seal.

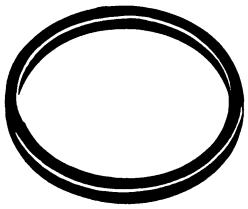

IYSQ01420023-01

## Front Brake Disc Removal and Installation

S5JB0A4206008

**Removal**

1) Hoist vehicle and remove front wheel.
2) Remove caliper assembly (2) by loosening caliper carrier bolts (1) (2 pcs).

**⚠ CAUTION**

**During removal, be careful not to damage brake flexible hose and not to depress brake pedal.**

**NOTE**

**Hang removed caliper with a wire hook or the like so as to prevent brake hose from bending and twisting excessively or being pulled.**

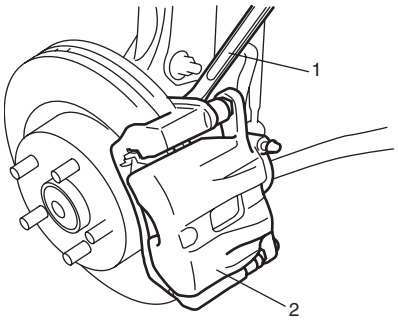


I5JB0A420010-01

3) Remove disc by using 8 mm bolts (1) (2 pcs).

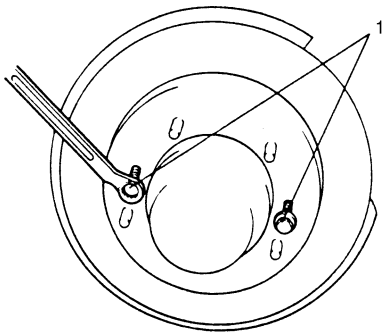


IYSQ01420025-01

**Installation**

1) Install disc to wheel hub.
2) Install caliper assembly to steering knuckle.
3) Tighten caliper carrier bolts (1) to specification.

**Tightening torque**
**Caliper carrier bolt (a): 85 N·m (8.5 kgf-m, 61.5 lb-ft)**

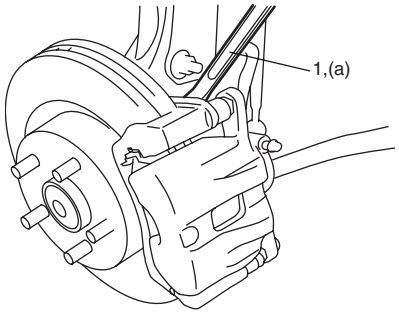


I5JB0A420011-01

4) Tighten front wheel nuts to specifications.

**Tightening torque**
**Wheel nut (a): 100 N·m (10.0 kgf-m, 72.5 lb-ft)**

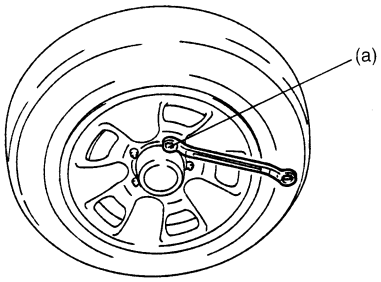


IYSQ01220010-01

5) Upon completion of installation, perform brake test.

## Front Brake Disc Inspection

S5JB0A4206009

Inspect front brake disc, referring to “Front Brake Disc and Pad Inspection: ”.

www.cargeek.ir

www.CarGeek.ir

# Specifications

## Tightening Torque Specifications

S5JB0A4207001

| Fastening part | Tightening torque | | | Note |
|---|---|---|---|---|
| | N·m | kgf-m | lb-ft | |
| Caliper pin bolt | 36 | 3.6 | 26.0 | ☞ / ☞ |
| Wheel nut | 100 | 10.0 | 72.5 | ☞ / ☞ / ☞ |
| Flexible hose joint bolt | 23 | 2.3 | 17.0 | ☞ |
| Caliper carrier bolt | 85 | 8.5 | 61.5 | ☞ |

**NOTE**

**The specified tightening torque is also described in the following.**
**“Front Disc Brake Components: ”**

**Reference:**
For the tightening torque of fastener not specified in this section, refer to “Fastener Information:  in Section 0A”.

# Special Tools and Equipment

## Recommended Service Material

S5JB0A4208001

**NOTE**

**Required service material is also described in the following.**
**“Front Disc Brake Components: ”**

www.cargeek.ir

www.cargeek.ir

www.CarGeek.ir


# Rear Brakes

## General Description

### Rear Drum Brake Assembly Construction

S5JB0A4301001

The drum brake assembly has a self shoe clearance adjusting system so that drum-to-shoe clearance is maintained appropriate at all times. Rear brake is a drum type. It uses leading trailing operation when brake pedal is depressed and when parking brake is applied on level road.
For components, refer to “Rear Drum Brake Assembly Components: ”.

**NOTE**

**Replace all components included in repair kits to service this drum brake. Lubricate parts as specified.**

**⚠ WARNING**

**If any hydraulic component is removed or brake line disconnected, bleed the brake system. The torque values specified are for dry, unlubricated fasteners.**

www.cargeek.ir

www.cargeek.ir

www.CarGeek.ir

# Repair Instructions

## Rear Drum Brake Assembly Components

S5JB0A4306001

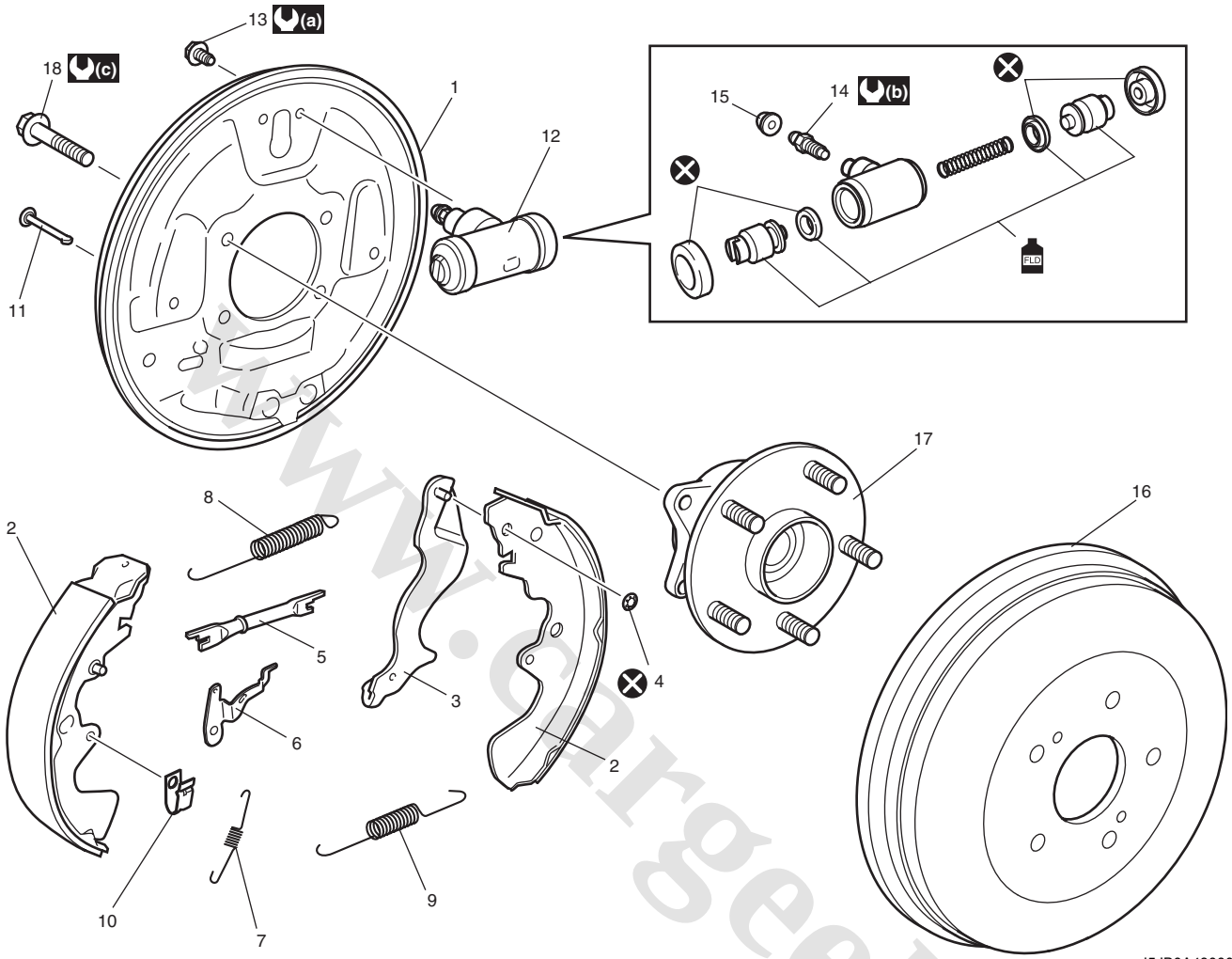


I5JB0A430001-03

| | | |
|---|---|---|
| 1. Brake back plate | 9. Shoe return lower spring | 17. Rear wheel hub assembly |
| 2. Brake shoe | 10. Shoe hold down spring | 18. Rear wheel hub housing bolt |
| 3. Parking brake shoe lever | 11. Shoe hold down pin | (a) : 13 N·m (1.3 kgf-m, 9.5 lb-ft) |
| 4. Push nut | FLD 12. Wheel cylinder<br>: Apply brake fluid to piston cup. | (b) : 7 N·m (0.7 kgf-m, 5.0 lb-ft) |
| 5. Brake adjuster (strut) | 13. Wheel cylinder mounting bolt | (c) : 50 N·m (5.0 kgf-m, 36.5 lb-ft) |
| 6. Adjuster pawl lever | 14. Rear wheel cylinder bleeder plug | ⊗ : Do not reuse. |
| 7. Adjuster spring | 15. Bleeder plug cap | |
| 8. Shoe return upper spring | 16. Rear brake drum | |

www.cargeek.ir

www.CarGeek.ir


## Rear Brake Drum Removal and Installation

S5JB0A4306003

### Removal

1) Hoist vehicle and remove rear wheel.
2) Release parking brake lever.
3) Remove rear console box and loosen parking brake cable adjusting nut (1).

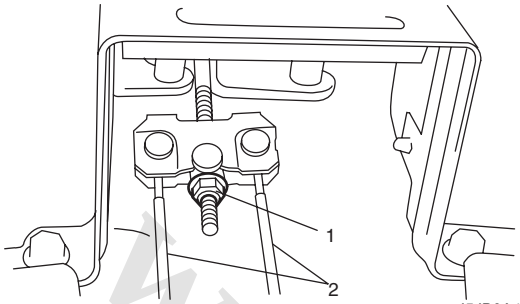


I5JB0A430002-02

2. Brake cable

4) Remove brake drum (1) by using 8 mm bolts (2) (2 pcs).

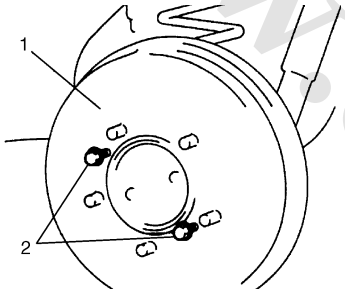


IYSQ01430004-01

### Installation

1) Before installing brake drum, check outer diameter of brake shoes (1). If it is not within value as specified below, adjust it to specification by turning adjuster (2).

**Rear brake shoe outer diameter "a"**
**253.3 – 253.7 mm (9.961 – 9.980 in.)**

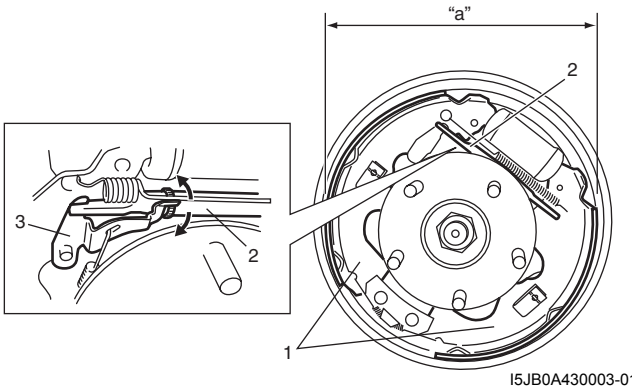


I5JB0A430003-01

3. Adjuster pawl lever

2) Install brake drum after making sure that inside of brake drum and brake shoes are free from dirt and oil.
3) Upon completion of all jobs, depress brake pedal with about 30 kg (66 lbs) load 3 to 10 times so as to obtain proper drum-to-shoe clearance.
   Adjust parking brake cable. For adjustment, refer to "Parking Brake Check and Adjustment: in Section 4D".
4) Install rear console box.
5) Install wheel and tighten wheel nuts to specified torque.

**Tightening torque**
**Wheel nut (a): 100 N·m (10.0 kgf-m, 72.5 lb-ft)**

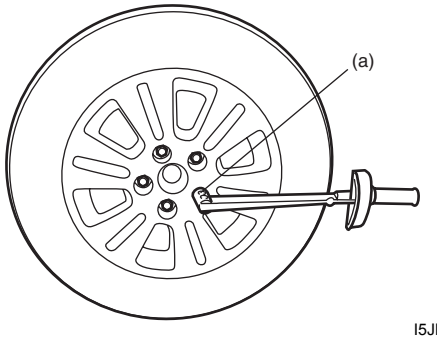


I5JB0A220029-01

6) Check to ensure that brake drum is free from dragging and proper braking is obtained. Then remove vehicle from hoist and perform brake test (foot brake and parking brake).

www.cargeek.ir

www.CarGeek.ir

## Rear Brake Drum and Shoe Inspection

S5JB0A4306004

### Brake Drum

Inspect brake drum for wear.
If drum inner diameter is exceeds the limit or uneven or stepped wear is excessive, replace the drum.

**Rear brake drum inner diameter "a"**
**Standard: 254 mm (10.00 in.)**
**Limit: 256 mm (10.07 in.)**

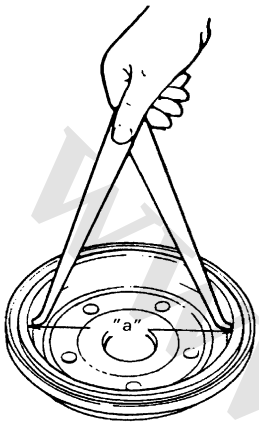


IYSQ01430007-01

### Cracked, scored, or grooved drum

A cracked, drum is unsafe for further service and must be replaced.
Do not attempt to weld a cracked drum.
Smooth up any slight scores. Heavy or extensive scoring will cause excessive brake lining wear and it will probably be necessary to resurface drum braking surface.
If brake linings are slightly worn and drum is grooved, drum should be polished with fine emery cloth but should no be turned.

**NOTE**

**When drum is removed, visually inspect wheel cylinder for brake fluid leakage. Correct leaky point, if any.**

### Brake Shoe

Measure the minimum thickness of brake lining (1). Also, check surface of lining for hardening, excessive wear and oil.

**Lining thickness "a"**
**Standard: 4.5 mm (0.18 in.)**
**Limit: 1.0 mm (0.04 in.)**

**⚠ CAUTION**

**Never polish lining with sandpaper. If lining is polished with sandpaper, hard particles of sandpaper will be deposited in lining and may damage drum. When it is required to correct lining, replace it with a new one.**

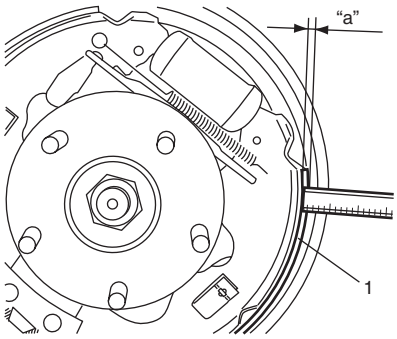


I5JB0A430004-02

## Rear Brake Shoe On-Vehicle Check

S5JB0A4306005

Inspection should be carried out on the following points after brake pedal travel (pedal to silencer clearance) check as described on "Excessive Pedal Travel Check: in Section 4A", even when it is more than specification. Amount of brake shoe wear can be checked as follows.

1) Hoist vehicle.
2) Remove rubber plug (1) from brake back plate.
3) Through hole of back plate, visually check for thickness of brake shoe lining (2). If lining thickness less than specified wear limit, replace with new brake shoes.

**Lining thickness "a"**
**Service limit: 1.0 mm (0.04 in.)**

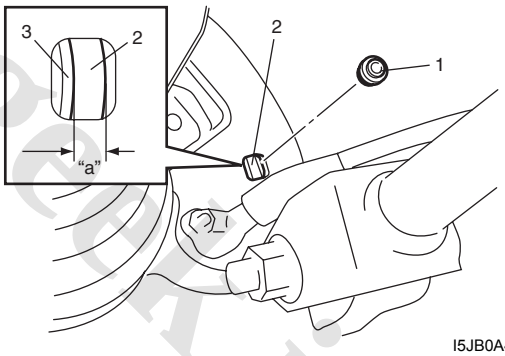


I5JB0A430005-01

| |
|---|
| 3. Brake shoe rim |

www.cargeek.ir

www.CarGeek.ir


## Rear Brake Shoe Removal and Installation

S5JB0A4306006

**⚠ WARNING**

**Use special care when installing brake shoe return spring. Failure in its proper installation may allow it to springback and cause personal injury.**

### Removal

1) Remove brake drum referring to “Rear Brake Drum Removal and Installation: ”.
2) Fully turn adjuster (1) to reduce brake shoe adjuster.

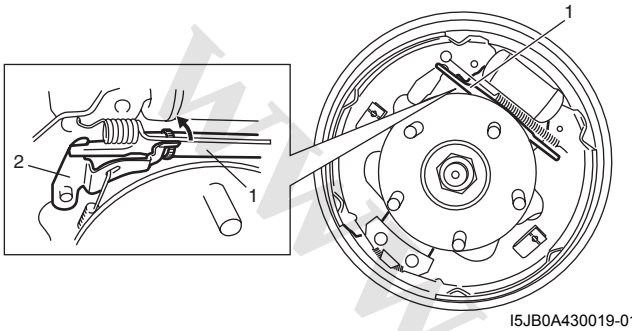


I5JB0A430019-01

| 2. Adjuster pawl lever |
|---|

3) Remove shoe hold down springs (1) by turning shoe hold down pins (2).

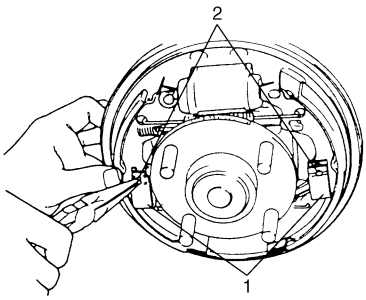


I2RH01430012-01

4) Remove upper shoe return spring (1), brake adjuster (2), adjuster pawl lever (3) and spring.
5) Remove brake shoes (4) and lower shoe return spring (5).

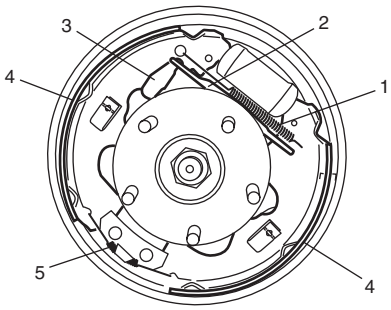


I5JB0A430006-01

6) Disconnect parking brake shoe lever (1) from parking brake cable (2).

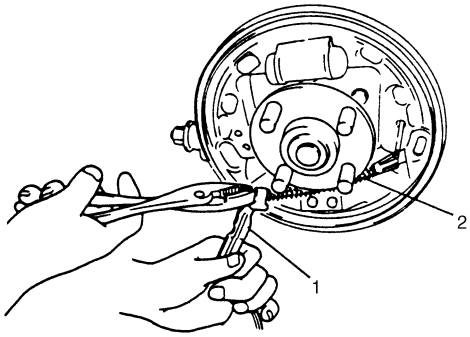


I2RH01430013-01

7) Remove push nut (1).
8) Remove parking brake shoe lever (2) from brake shoe (3).

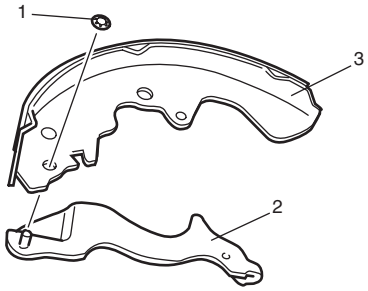


I5JB0A430007-01

### Installation

1) Assemble parts in reverse order of removal procedure.
2) Before install brake shoe, be sure to fully turn brake adjuster to reduce.
3) Install shoe hold down springs (1) by pushing them down in place and turning hold down pins (2).

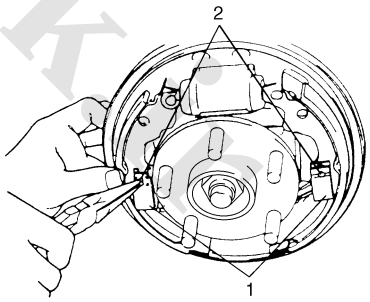


I5JB0A430010-01

www.cargeek.ir

www.CarGeek.ir

4) Install brake adjuster (2) and upper shoe return spring (1).
5) Install adjuster pawl lever (3) and adjuster spring.

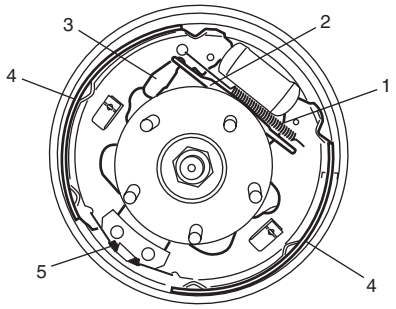

I5JB0A430006-01

| | |
|---|---|
| 4. | Brake shoe |
| 5. | Lower shoe return spring |

6) For procedure hereafter, refer to “Rear Brake Drum Removal and Installation: ”.

## Rear Brake Shoe Inspection

S5JB0A4306007

### Parking Brake Shoe Lever

Inspect brake shoe lever for free movement against brake shoe web. If defective, correct or replace.

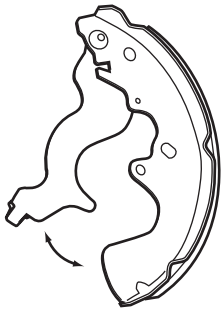
I5JB0A430009-02

### Brake Adjuster

Check thread or ratchet of adjuster for wear, sticking and corrosion.
If found defective, replace brake adjuster.

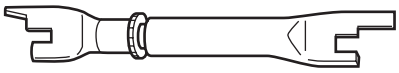
I5JB0A430011-01

### Springs

Inspect for damage or weakening.
Inspect each part with arrow for rust. If found defective, replace.

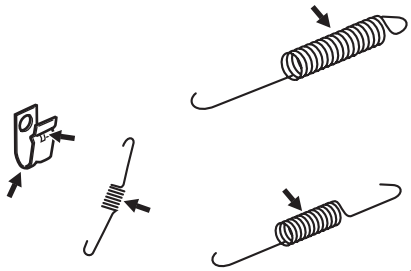
I5JB0A430012-02

### Brake Shoe

Refer to “Rear Brake Drum and Shoe Inspection: ”.

## Wheel Cylinder Removal and Installation

S5JB0A4306008

### Removal

1) Remove brake drum referring to “Rear Brake Drum Removal and Installation: ”.
2) Remove brake shoe referring to “Rear Brake Shoe Removal and Installation: ”.
3) Loosen brake pipe flare nut (1) but only within the extent that fluid does not leak.
4) Remove wheel cylinder mounting bolts (2). Disconnect brake pipe from wheel cylinder and put wheel cylinder bleeder plug cap (3) onto pipe to prevent fluid from spilling.

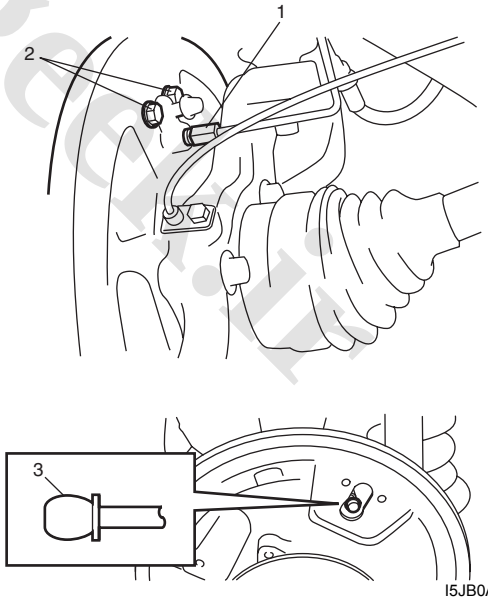

I5JB0A430013-01

www.cargeek.ir

www.CarGeek.ir


### Installation

1) Fit wheel cylinder to brake back plate, take off bleeder plug cap from brake pipe and connect pipe to wheel cylinder just enough to prevent fluid from leaking.
2) Tighten wheel cylinder mounting bolts to brake back plate (1) to specified torque.

   **Tightening torque**
   **Wheel cylinder mounting bolt (a): 13 N·m (1.3 kgf-m, 9.5 lb-ft)**

3) Tighten flare nut of brake pipe (2) to specified torque.

   **Tightening torque**
   **Brake pipe flare nut (b): 16 N·m (1.6 kgf-m, 12.0 lb-ft)**

4) Install bleeder plug cap (3) taken off from pipe back to bleeder plug.

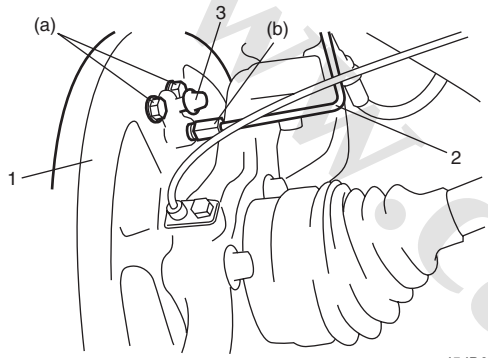

I5JB0A430014-01

5) Install brake shoe referring to “Rear Brake Shoe Removal and Installation: ”.
6) Install brake drum referring to step 1) to 2) of “Rear Brake Drum Removal and Installation: ”.
7) Fill reservoir with brake fluid and bleed brake system. For bleeding operation refer to “Air Bleeding of Brake System: in Section 4A”.
8) Adjust, check brake and install rear wheel referring to step 3) to 6) of “Rear Brake Drum Removal and Installation: ”.

## Wheel Cylinder Inspection

S5JB0A4306009

Inspect wheel cylinder disassembled parts for wear, cracks, corrosion or damage.

**NOTE**

**Clean wheel cylinder components with brake fluid.**

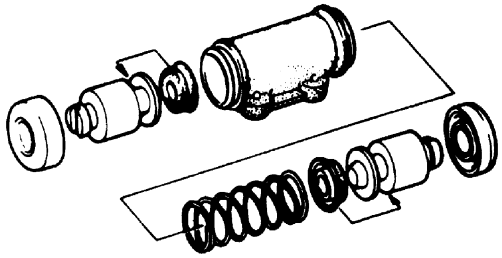
IYSQ01430019-01

## Rear Brake Back Plate Removal and Installation

S5JB0A4306010

### Removal

1) Hoist vehicle and remove rear wheel.
2) Uncaulk rear axle nut (1).
3) Pull up parking brake lever fully and remove rear axle nut (1).

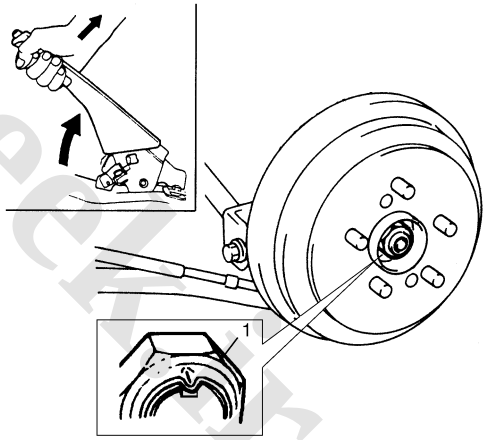

I5JB0A230058-01

www.cargeek.ir

www.CarGeek.ir

4) Remove brake drum referring to “Rear Brake Drum Removal and Installation: ”.
5) Remove brake shoe referring to “Rear Brake Shoe Removal and Installation: ”.
6) Remove wheel cylinder referring to “Wheel Cylinder Removal and Installation: ”.
7) Remove parking brake cable (1) from brake back plate by loosening parking cable cap nut (2).

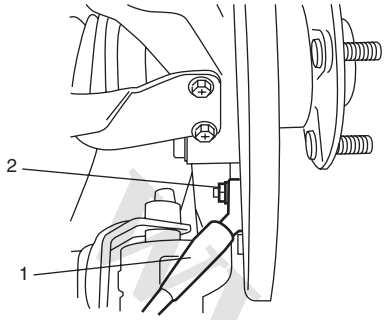

I5JB0A430015-01

8) Remove rear wheel hub housing bolts (1).

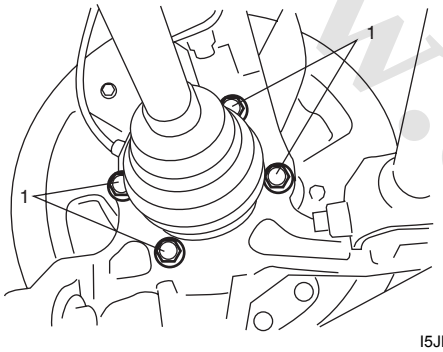

I5JB0A230061-01

9) Remove rear wheel hub assembly and brake back plate from knuckle.

**Installation**

1) Install brake back plate (1) and rear wheel hub assembly (2) to knuckle, and tighten wheel hub housing bolts to specified torque.

   **Tightening torque**
   **Rear wheel hub housing bolt (a): 50 N·m (5.0 kgf-m, 36.5 lb-ft)**

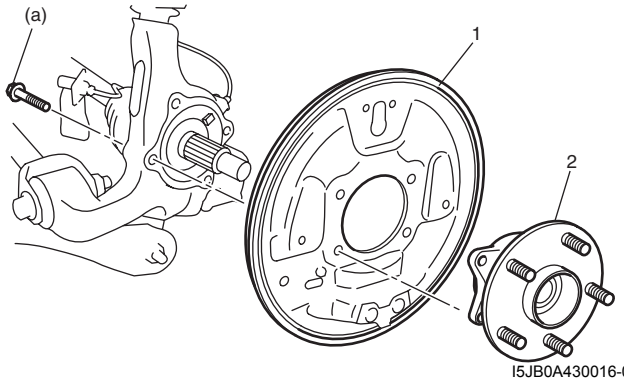

I5JB0A430016-01

2) Tighten rear axle nut (1) temporarily by hand at this step.

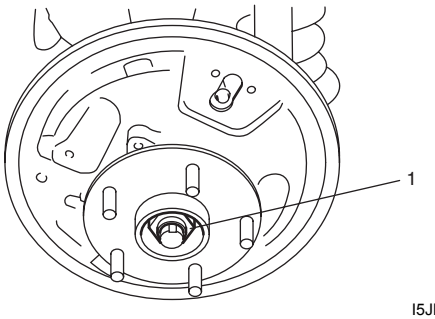

I5JB0A430017-01

3) Install parking brake cable (1) to brake back plate and tighten cable cap nut to specified torque.

   **Tightening torque**
   **Parking cable cap nut (a): 11 N·m (1.1 kgf-m, 8.0 lb-ft)**

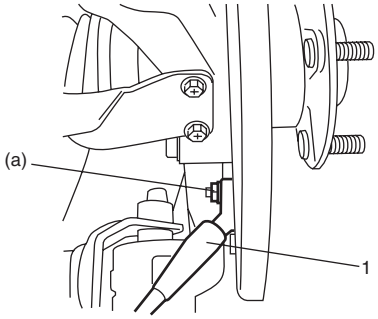

I5JB0A430018-01

4) Install wheel cylinder and rear brake shoe referring to step 1) to 7) of “Wheel Cylinder Removal and Installation: ”.
5) Install brake drum and adjust brake referring to step 1) to 4) of “Rear Brake Drum Removal and Installation: ”.
6) Pull up parking brake lever fully and tighten rear axle nut (1).

   **Tightening torque**
   **Rear axle nut (a): 200 N·m (20.0 kgf-m, 145.0 lb-ft)**

7) Caulk rear axle nut (1).

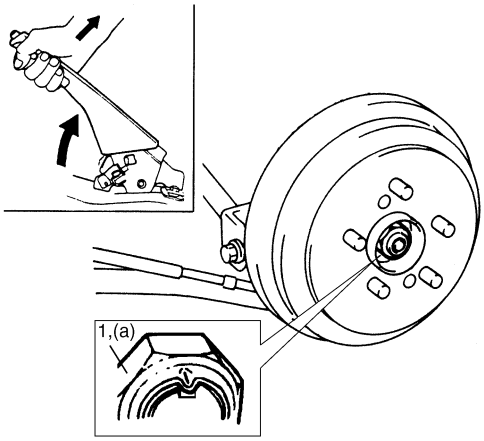

I5JB0A230065-01

www.cargeek.ir

www.CarGeek.ir


8) Install wheel and tighten wheel nuts to specified torque.

9) Check to ensure that brake drum is free from dragging and proper braking is obtained. Remove vehicle from hoist and perform brake test (foot brake and parking brake).

# Specifications

## Tightening Torque Specifications

S5JB0A4307001

| Fastening part | Tightening torque | | | Note |
|---|---|---|---|---|
| | N·m | kgf-m | lb-ft | |
| Wheel nut | 100 | 10.0 | 72.5 | ☞ |
| Wheel cylinder mounting bolt | 13 | 1.3 | 9.5 | ☞ |
| Brake pipe flare nut | 16 | 1.6 | 12.0 | ☞ |
| Rear wheel hub housing bolt | 50 | 5.0 | 36.5 | ☞ |
| Parking cable cap nut | 11 | 1.1 | 8.0 | ☞ |
| Rear axle nut | 200 | 20.0 | 145.0 | ☞ |

**NOTE**

**The specified tightening torque is also described in the following.**
**“Rear Drum Brake Assembly Components: ”**

**Reference:**
For the tightening torque of fastener not specified in this section, refer to “Fastener Information:  in Section 0A”.

# Special Tools and Equipment

## Recommended Service Material

S5JB0A4308001

**NOTE**

**Required service material is also described in the following.**
**“Rear Drum Brake Assembly Components: ”**

www.cargeek.ir

www.CarGeek.ir

# Parking Brake

## Component Location

### Parking Brake Cable Location

S5JB0A4403001

www.cargeek.ir

www.cargeek.ir

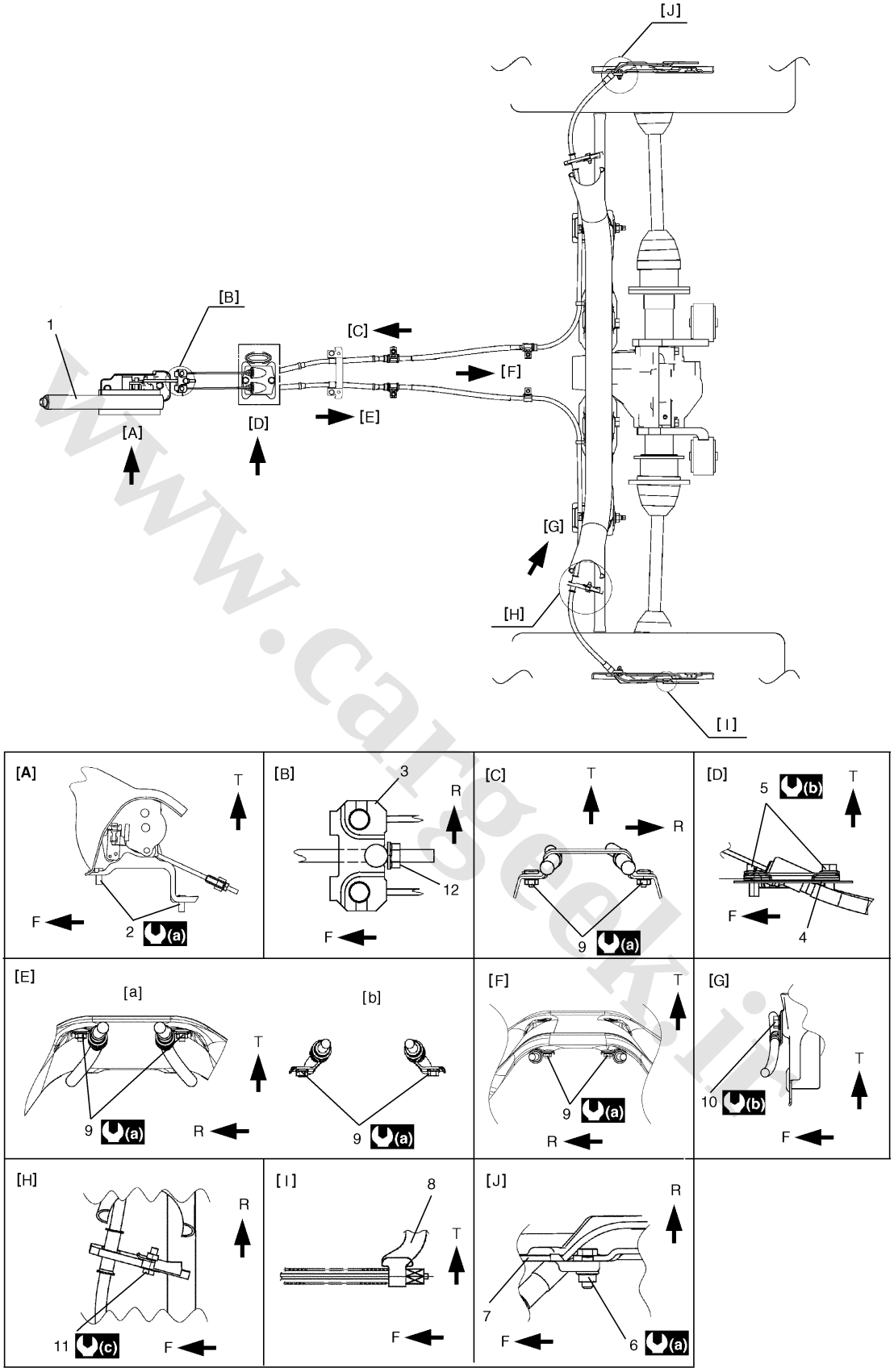


I5JB0A440001-02

| | | | |
|---|---|---|---|
| T: Top side | 3. Equalizer | 8. Parking brake shoe lever | [a]: For 5door model |
| F: Front side | 4. Parking cable bracket | 9. Parking cable clamp nut | [b]: For 3door model |
| R: Right side | 5. Parking cable bracket bolt | 10. Parking cable clamp bolt | (a) : 11 N·m (1.1 kgf-m, 8.0 lb-ft) |
| 1. Parking brake lever assembly | 6. Parking cable cap nut | 11. Parking cable hanger bolt | (b) : 25 N·m (2.5 kgf-m, 18.0 b-ft) |
| 2. Parking brake lever bolt | 7. Brake back plate | 12. Adjusting nut | (c) : 10 N·m (1.0 kgf-m, 7.5 lb-ft) |

www.CarGeek.ir

# Repair Instructions

## Parking Brake Check and Adjustment

S5JB0A4406001

### Check

Hold center of parking brake lever grip and pull it up with 200 N (20 kg, 44 lbs) force.
With parking brake lever pulled up as shown, count ratchet notches.
There should be 5 to 7 notches.
Also, check if both right and left rear wheels are locked firmly.
To count number of notches easily, listen to click sounds that ratchet makes while pulling parking brake lever without pressing its button.
One click sound corresponds to one notch.
If number of notches is out of specification, adjust cable by referring to adjustment procedure to obtain specified parking brake stroke.

**NOTE**

**Check tooth tip of each notch for damage or wear. If any damage or wear is found, replace parking brake lever.**

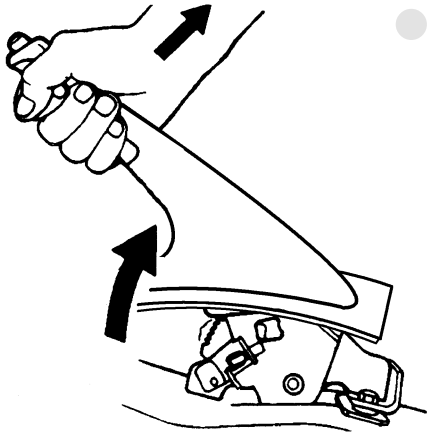

I3JA01440003-01

### Adjustment

**NOTE**

**Make sure for the following conditions before cable adjustment.**

- **No air is trapped in brake system.**
- **Brake pedal travel is proper.**
- **Brake pedal has been depressed a few times with about 300 N (30 kg, 66 lbs) load.**
- **Parking brake lever has been pulled up a few times with about 200 N (20 kg, 44 lbs) force.**
  **If parking brake cable is replaced with new one, pull up parking brake lever a few times with about 500 N (50 kg, 110 lbs) force.**
- **Rear brake shoes are not worn beyond limit, and self adjusting mechanism operates properly.**

After confirming that above 5 conditions are all satisfied, adjust parking brake lever stroke by loosening or tightening adjusting nut (1).

**NOTE**

**Check brake drum for dragging after adjustment.**

**Parking brake stroke (when lever is pulled up at 200 N (20 kg, 44 lbs))**
**5 to 7 notches**

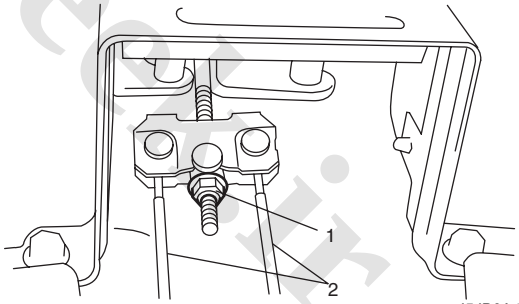


I5JB0A430002-02

2. Brake cable

www.cargeek.ir

www.CarGeek.ir


## Parking Brake Lever Removal and Installation

S5JB0A4406002

### Removal

1) Disconnect negative (–) cable at battery.
2) Block vehicle wheels and release parking brake lever.
3) Remove console box.
4) Disconnect lead wire of parking brake switch at coupler.
5) Remove parking brake cable adjusting nut (1).

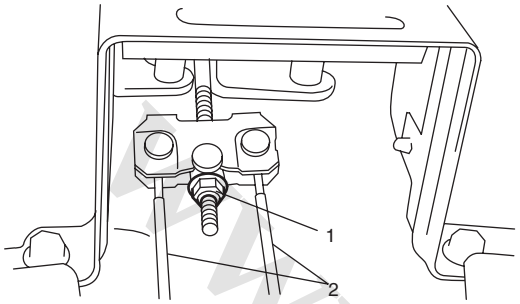


I5JB0A430002-02

| |
|---|
| 2. Brake cable |

6) Remove parking brake lever bolts (4) and then remove parking brake lever assembly (1) from equalizer (3).
7) Remove equalizer (3) from parking brake cable (2).

**NOTE**

**Don't disassemble parking brake lever switch. It must be removed and installed as a complete switch assembly.**

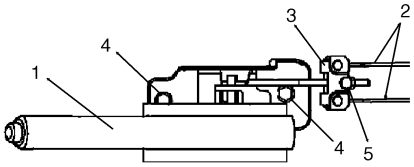


I5JB0A440004-01

| |
|---|
| 5. Pin |

### Installation

Install in reverse order of removal procedure, noting the following points.

- Check equalizer inclined angle.

**<u>Equalizer inclined angle</u>**
**"a": within 15 degrees**

**Tightening torque**
**Parking brake lever bolt (a): 25 N·m (2.5 kgf-m, 18.0 lb-ft)**

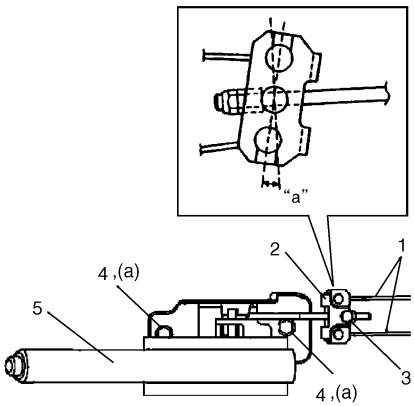


I5JB0A440005-01

| | |
|---|---|
| 1. Parking brake cable | 4. Parking brake lever bolt |
| 2. Equalizer | 5. Parking brake lever |
| 3. Pin | |

1) After all parts are installed, parking brake lever needs to be adjusted. Refer to "Parking Brake Check and Adjustment: ".
2) Check brake drum for dragging and brake system for proper performance. After removing vehicle from hoist, brake test should be performed.

## Parking Brake Cable Removal and Installation

S5JB0A4406003

### Removal

**NOTE**

**When it is necessary to remove both right and left parking brake cables, repeat the following steps 4) to 6) on right and left wheels.**

1) Hoist vehicle.
2) Remove wheel.
3) Disconnect parking brake cable from equalizer (parking brake lever) and clamps.
4) Remove brake drum. Refer to "Rear Brake Drum Removal and Installation: in Section 4C".
5) Disconnect parking brake cable from brake shoe lever referring to "Rear Brake Shoe Removal and Installation: in Section 4C".
6) Remove parking brake cable and parking cable bracket.

www.cargeek.ir

www.CarGeek.ir

**Installation**
Install it by reversing removal procedure, noting the following points.

- Install clamps properly referring to “Parking Brake Cable Location: ”.
- Tighten bolts and nuts to specified torque referring to “Parking Brake Cable Location: ”.
- Adjust parking brake cable. Refer to “Parking Brake Check and Adjustment: ”.
- Check brake drum for dragging and brake system for proper performance. Brake test should be performed.

# Specifications

## Tightening Torque Specifications

S5JB0A4407001

| Fastening part | Tightening torque | | | Note |
|---|---|---|---|---|
| | N·m | kgf-m | lb-ft | |
| Parking brake lever bolt | 25 | 2.5 | 18.0 | ☞ |

**NOTE**

**The specified tightening torque is also described in the following.**
**“Parking Brake Cable Location: ”**

**Reference:**
For the tightening torque of fastener not specified in this section, refer to “Fastener Information:  in Section 0A”.

www.cargeek.ir

www.cargeek.ir

www.CarGeek.ir


# ABS

## Precautions

### Precautions in Diagnosing Troubles

S5JB0A4500001

To ensure that the trouble diagnosis is done accurately and smoothly, observe the following and follow “ABS Check: ”.

- If the vehicles was operated in any of the following ways, ABS warning lamp may light momentarily but this does not indicate anything abnormal in ABS.
  - The vehicle was driven with parking brake pulled.
  - The vehicle was driven with brake dragging.
  - The vehicle was stuck in mud, sand, etc.
  - Wheel spin occurred while driving.
  - Wheel(s) was rotated while the vehicle was jacked up.
- Be sure to read “Precautions for Electrical Circuit Service: in Section 00” before inspection and observe what is written there.
- Be sure to use the trouble diagnosis procedure as described in “ABS Check: ”. Failure to follow it may result in incorrect diagnosis. (Some other diagnosis trouble code may be stored by mistake in the memory of ABS control module during inspection.)
- When disconnecting ABS hydraulic unit / control module connector (1), pull down lock lever (2) of connector.

When connecting, set the connector on ABS hydraulic unit / control module assembly and pull up the lock lever (2) until it locks.

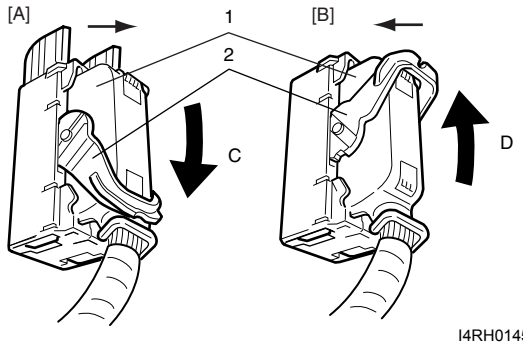


I4RH01450001-01

| | |
|---|---|
| [A]: Disconnect | C: Pull down to disconnect |
| [B]: Connect | D: Pull up to connect |

### Precautions in On-Vehicle Service

S5JB0A4500002

When connector is connected to ABS hydraulic unit / control module assembly, do not disconnect connectors of sensors with ignition switch ON. Otherwise, DTC will be set in ABS control module.

## General Description

### ABS Description

S5JB0A4501001

The ABS (Antilock Brake System) controls the fluid pressure applied to the wheel cylinder of each brake from the master cylinder so that each wheel is not locked even when hard braking is applied.
This ABS has also the following function.
While braking is applied, but before ABS control becomes effective, braking force is distributed between the front and rear so as to prevent the rear wheels from being locked too early for better stability of the vehicle.
The main component parts of this ABS include the following parts in addition to those of the conventional brake system.

- Wheel speed sensor which senses revolution speed of each wheel and outputs its signal.
- ABS warning lamp which lights to inform abnormality when system fails to operate properly.
- ABS hydraulic unit / control module assembly is incorporated ABS control module, ABS hydraulic unit (actuator assembly), solenoid valve power supply driver (transistor), solenoid valve driver (transistor), pump motor driver (transistor).
  - ABS control module which sends operation signal to ABS hydraulic unit to control fluid pressure applied to each wheel cylinder based on signal from each wheel speed sensor so as to prevent wheel from locking.
  - ABS hydraulic unit which operates according to signal from ABS control module to control fluid pressure applied to wheel cylinder of each 4 wheels.
  - Solenoid valve power supply driver (transistor) which supplies power to solenoid valve in ABS hydraulic unit.
  - Solenoid valve driver (transistor) which controls each solenoid valves in ABS hydraulic unit.
  - Pump motor driver (transistor) which supplies power to pump motor in ABS hydraulic unit.

www.cargeek.ir

www.CarGeek.ir

This ABS is equipped with Electronic Brake force Distribution (EBD) system that controls a fluid pressure of rear wheels to best condition, which is the same function as that of proportioning valve, by the signal from wheel sensor independently of change of load due to load capacity and so on. And if the EBD system fails to operate properly, the brake warning lamp lights to inform abnormality.

## ABS Hydraulic Unit / Control Module Assembly Description

S5JB0A4501002

ABS control module is a component of ABS hydraulic unit / control module assembly and has the following functions.

### Self-Diagnosis Function

ABS control module diagnoses conditions of the system component parts (whether or not there is any abnormality) all the time and indicates the results (warning of abnormality occurrence and DTC) through the ABS warning lamp (1) as described.

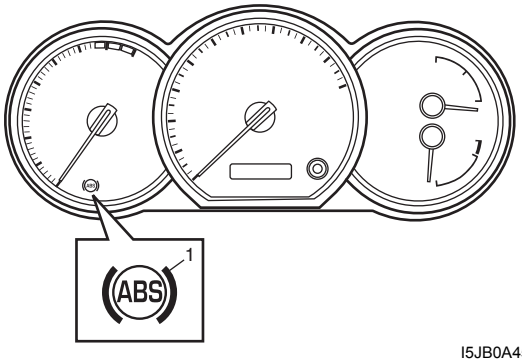


I5JB0A450001-01

- When ignition switch is turned ON, ABS warning lamp lights for 2 seconds to check its circuit.
- When no abnormality has been detected (the system is in good condition), ABS warning lamp turns OFF after 2 seconds.
- When an abnormality in the system is detected, ABS warning lamp lights and the area where that abnormality lies is stored in the memory of EEPROM in ABS control module.

## CAN Communication System Description

S5JB0A4501003

Refer to “CAN Communication System Description: in Section 1A” for CAN communication system description.
ABS communicates control data with each control module as follows.

### ABS Transmission Data

| | | | | ECM | Combination Meter | 4WD control module (if equiped) |
|---|---|---|---|---|---|---|
| ABS hydraulic unit / control module assembly | Transmit | DATA | Torque request signal | ○ | | |
| | | | Wheel speed signal | ○ | ○ | ○ |
| | | | ABS active | ○ | | ○ |
| | | | ABS indication on | | ○ | |
| | | | EBD indication on | | ○ | |
| | | | ABS diagnostic trouble codes | | ○ | |

I5JB0A450002-03

### ABS Reception Data

| | | | | ECM |
|---|---|---|---|---|
| ABS hydraulic unit / control module assembly | Receive | DATA | Brake pedal switch active | ○ |

I5JB0A450003-03

www.cargeek.ir

www.CarGeek.ir


# Schematic and Routing Diagram

## ABS Schematic

S5JB0A4502001

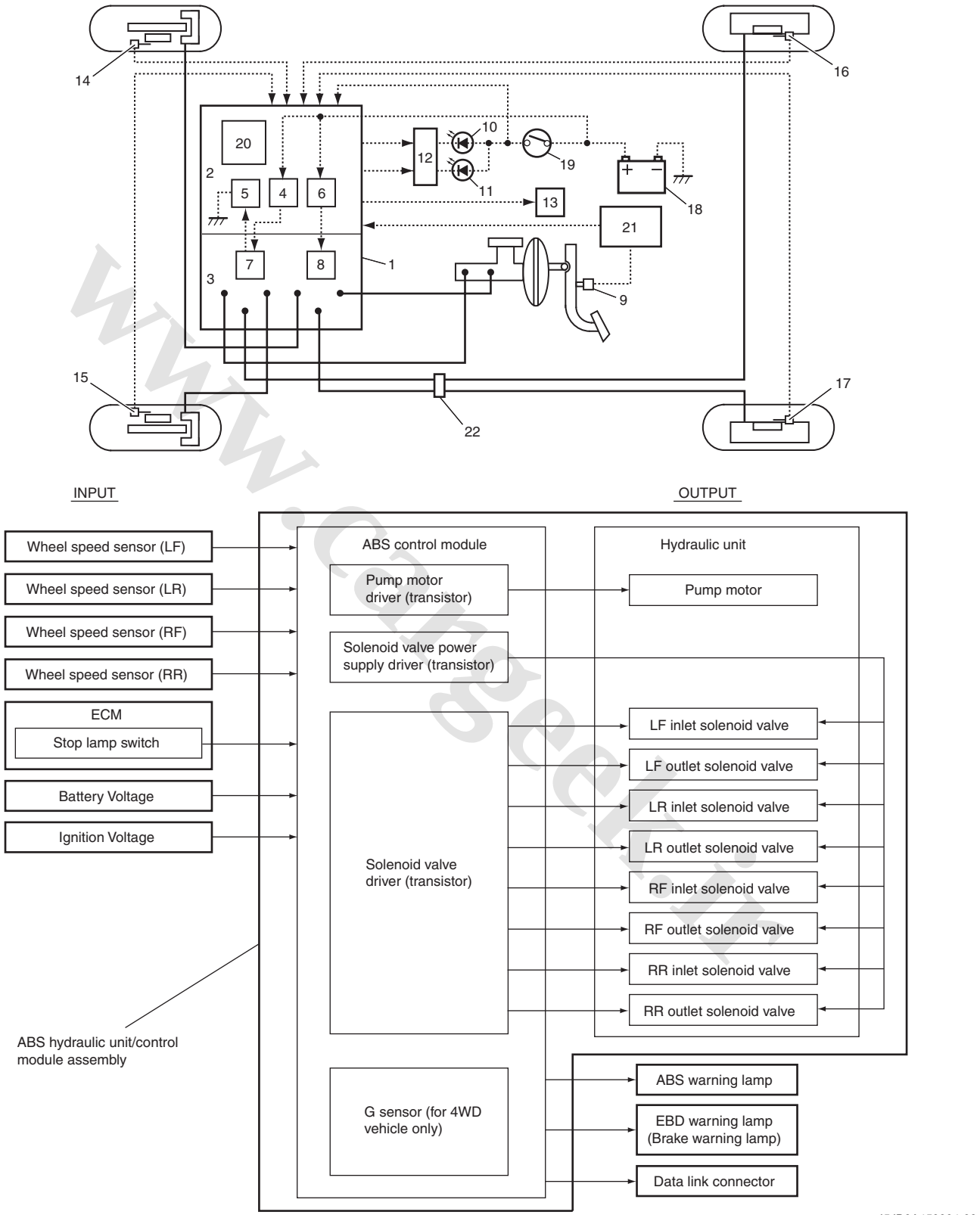


I5JB0A450004-03

| | | |
|---|---|---|
| 1. ABS hydraulic unit / control module assembly | 9. Stop lamp switch | 17. Wheel speed sensor (Left-rear) |
| 2. ABS control module | 10. ABS warning lamp | 18. Battery |
| 3. ABS hydraulic unit | 11. EBD warning lamp (Brake warning lamp) | 19. Ignition switch |
| 4. Solenoid valve power supply driver (transistor) | 12. Lamp driver module | 20. G sensor (for 4WD vehicle only) |

www.cargeek.ir

www.CarGeek.ir

| | | |
|---|---|---|
| 5. Solenoid valve driver (transistor) | 13. Data link connector | 21. ECM |
| 6. Pump motor driver (transistor) | 14. Wheel speed sensor (Right-front) | 22. 4 way joint |
| 7. Solenoid valve | 15. Wheel speed sensor (Left-front) | |
| 8. Pump motor | 16. Wheel speed sensor (Right-rear) | |

## ABS Wiring Circuit Diagram

S5JB0A4502002

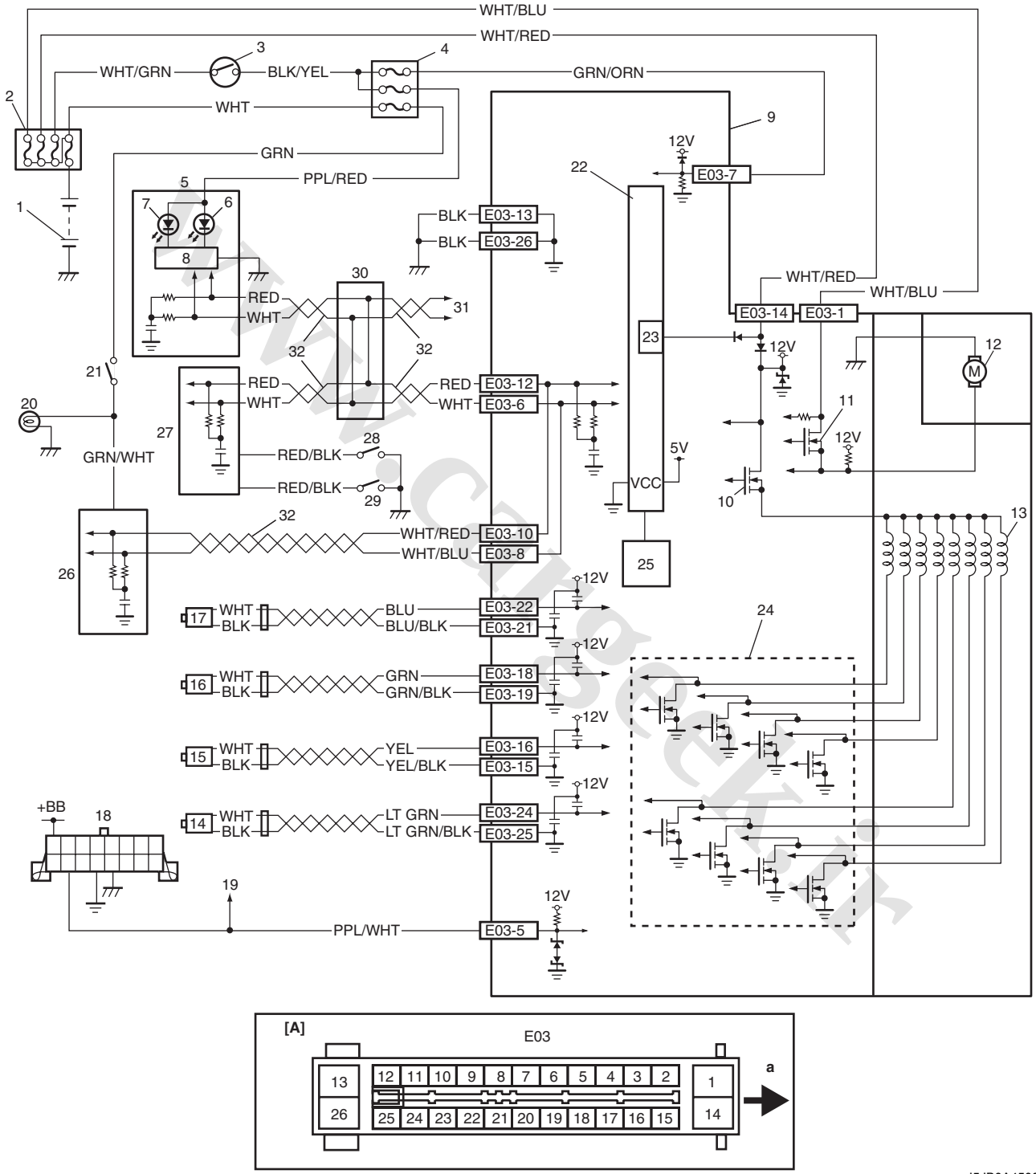


I5JB0A450005-02

| | | |
|---|---|---|
| [A]: Terminal arrangement of ABS hydraulic unit / control module assembly | 11. ABS pump motor driver (transistor) | 23. Internal memory |
| a: Upside | 12. Pump motor | 24. Solenoid valve driver (transistor) |
| 1. Battery | 13. Solenoid valves | 25. G sensor (4WD vehicle only) |
| 2. Main fuse box | 14. Right-rear wheel speed sensor | 26. ECM |
| 3. Ignition switch | 15. Left-rear wheel speed sensor | 27. BCM |

www.cargeek.ir

| | | |
|---|---|---|
| 4. Circuit fuse box | 16. Right-front wheel speed sensor | 28. Brake fluid level switch |
| 5. Combination meter | 17. Left-front wheel speed sensor | 29. Parking brake switch |
| 6. ABS warning lamp | 18. Data link connector | 30. CAN junction |
| 7. EBD warning lamp (Brake warning lamp) | 19. To ECM, TCM, SDM, BCM and 4WD control module | 31. To TCM, 4WD control module and keyless start control module |
| 8. Lamp driver module | 20. Stop lamp | 32. CAN communication line |
| 9. ABS hydraulic unit / control module assembly | 21. Brake light switch | |
| 10. Solenoid valve power supply driver (transistor) | 22. Power control unit | |

| Terminal | | Wire color | Circuit |
|---|---|---|---|
| E03 | 1 | WHT/BLU | ABS pump motor driver (Transistor) |
| | 2 | — | — |
| | 3 | — | — |
| | 4 | — | — |
| | 5 | PPL/WHT | Dark link connector |
| | 6 | WHT | CAN communication line (low) for combination meter |
| | 7 | GRN/ORN | Ignition switch |
| | 8 | WHT/BLU | CAN communication line (low) for ECM |
| | 9 | — | — |
| | 10 | WHT/RED | CAN communication line (high) for ECM |
| | 11 | — | — |
| | 12 | RED | CAN communication line (high) for combination meter |
| | 13 | BLK | Ground |
| | 14 | WHT/RED | Solenoid valve power supply driver (Transistor) |
| | 15 | YEL/BLK | Left–rear wheel speed sensor (–) |
| | 16 | YEL | Left–rear wheel speed sensor (+) |
| | 17 | — | — |
| | 18 | GRN | Right–front wheel speed sensor (+) |
| | 19 | GRN/BLK | Right–front wheel speed sensor (–) |
| | 20 | — | — |
| | 21 | BLU/BLK | Left–front wheel speed sensor (–) |
| | 22 | BLU | Left–front wheel speed sensor (+) |
| | 23 | — | — |
| | 24 | LT GRN | Right–rear wheel speed sensor (+) |
| | 25 | LT GRN/BLK | Right–rear wheel speed sensor (–) |
| | 26 | BLK | Ground |

www.CarGeek.ir

www.CarGeek.ir

# Component Location

## ABS Components Location

S5JB0A4503001

**NOTE**

**As for the difference of RH steering vehicle and LH steering vehicle, the location of the combination meter, data link connector, stop lamp switch and the brake master cylinder assembly only changes.**

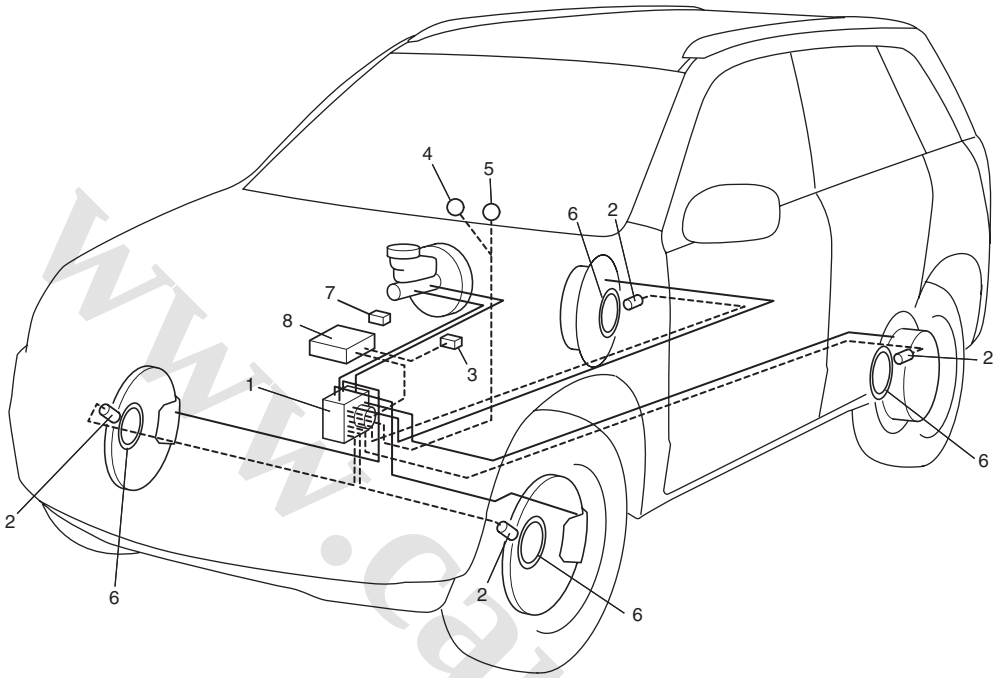


I5JB0A450006-01

| | |
|---|---|
| 1. ABS hydraulic unit / control module assembly | 5. EBD warning lamp (Brake warning lamp) |
| 2. Wheel speed sensors | 6. Wheel encoder (included in wheel hub assembly) |
| 3. Stop lamp switch | 7. Data link connector |
| 4. ABS warning lamp | 8. ECM |

www.cargeek.ir

www.CarGeek.ir


# Diagnostic Information and Procedures

## ABS Check

S5JB0A4504001

Refer to the following items for the details of each step.

| Step | Action | Yes | No |
|---|---|---|---|
| 1 | ☞ **Malfunction analysis**<br>1) Perform “Customer complaint analysis: ”.<br>2) Perform “Problem symptom confirmation: ”.<br>3) Perform “DTC check, record and clearance: ” and recheck DTC.<br>*Is there any malfunction DTC?* | Go to Step 4. | Go to Step 2. |
| 2 | ☞ **Driving test**<br>1) Perform “Step 2: Driving Test: ”.<br>*Is trouble symptom identified?* | Go to Step 3. | Go to Step 6. |
| 3 | ☞ **DTC check**<br>1) Perform “DTC Check: ”.<br>*Is it malfunction code?* | Go to Step 4. | Go to Step 5. |
| 4 | ☞ **ABS check**<br>1) Inspect and repair referring to applicable DTC flow.<br>*Does trouble recur?* | Go to Step 5. | Go to Step 7. |
| 5 | ☞ **Brakes diagnosis**<br>1) Inspect and repair referring to “Brakes Symptom Diagnosis: in Section 4A”.<br>*Does trouble recur?* | Go to Step 3. | Go to Step 7. |
| 6 | ☞ **Check for intermittent problem**<br>1) Check intermittent troubles referring to “Intermittent and Poor Connection Inspection: in Section 00” and related circuit of trouble code recorded in Step 1.<br>*Does trouble recur?* | Go to Step 4. | Go to Step 7. |
| 7 | ☞ **Final confirmation test**<br>1) Perform “Step 7: Final Confirmation Test: ”.<br>*Does trouble recur?* | Go to Step 3. | End. |

**Step 1: Malfunction Analysis**

**Customer complaint analysis**

Record details of the problem (failure, complaint) and how it occurred as described by the customer.
For this purpose, use of such a questionnaire form as shown in the following will facilitate collecting information to the point required for proper analysis and diagnosis.

www.cargeek.ir

www.CarGeek.ir

**Customer questionnaire (Example)**

| | | | |
|---|---|---|---|
| Customer's name: | Model: | VIN: | |
| Date of issue: | Date of Reg: | Date of problem: | Mileage: |

| | |
|---|---|
| Problem Symptoms | ● ABS warning lamp abnormal: fails to turn on/fails to go off/flashes<br>● Abnormal noise while vehicle is running: from motor, from valve, other_____<br>● Wheel is locked at braking:<br>● Pump motor does not stop (running):<br>● Braking does not work:<br>● Other: |
| Frequency of occurrence | ● Continuous/Intermittent ( times a day, a month)/ other_____ |
| Conditions for Occurrence of Problem | ● Vehicle at stop & ignition switch ON:<br>● When starting: at initial start only/at every start/Other_____<br>● Vehicle speed: while accelerating/while decelerating/at stop/ while turning/while running at constant speed/ other_____<br>● Road surface condition: Paved road/rough road/snow-covered road/ other_____<br>● Chain equipment: |
| Environmental Condition | ● Weather: fair/cloudy/rain/snow/other_____<br>● Temperature: °F ( °C) |
| Diagnostic Trouble Code | ● First check: Normal code/malfunction code ( )<br>● Second check after test drive: Normal code/malfunction code ( ) |

I2RH01450014-01

**Problem symptom confirmation**
Check if what the customer claimed in "Customer Questionnaire" is actually found in the vehicle and if that symptom is found, whether it is identified as a failure. (This step should be shared with the customer if possible.) Check warning lamps related to brake system referring to "EBD Warning Lamp (Brake Warning Lamp) Check: " and "ABS Warning Lamp Check: ".

**DTC check, record and clearance**
Perform "DTC Check: " procedure, record it and then clear it referring to "DTC Clearance: ".
Recheck DTC referring to "DTC Check: ".
When DTC which is recorded at DTC check procedure is detected again after performing DTC clearance, go to "Step 4: ABS Check: " to proceed the diagnosis.
When DTC which is recorded at DTC check procedure is not indicated anymore after performing DTC clearance, ABS control module does not perform the system diagnosis, or temporary abnormality may occur, therefore go to "Step 2: Driving Test: " to proceed the diagnosis.

**Step 2: Driving Test**
Test drive the vehicle at 40 km/h for more than a minute and check if any trouble symptom (such as abnormal lighting of ABS warning light) exists.
If the malfunction DTC is confirmed again at ignition switch ON, driving test as described is not necessary. Proceed to Step 3.

www.cargeek.ir

www.CarGeek.ir


**Step 3: DTC Check**
Recheck DTC referring to “DTC Check: ”.

**Step 4: ABS Check**
According to ABS Check for the DTC confirmation in Step 3, locate the cause of the trouble, namely in a sensor, switch, wire harness, connector, actuator assembly or other part and repair or replace faulty parts.

**Step 5: Brakes Diagnosis**
Check the parts or system suspected as a possible cause referring to “Brakes Symptom Diagnosis:  in Section 4A” and based on symptoms appearing on the vehicle (symptom obtained through Steps 1 and 2 and repair or replace faulty parts, if any).

**Step 6: Check for Intermittent Problem**
Check parts where an intermittent trouble is easy to occur (e.g., wire harness, connector, etc.), referring to “Intermittent and Poor Connection Inspection:  in Section 00” and related circuit of trouble code recorded in Step 1 to 3.

**Step 7: Final Confirmation Test**
Confirm that the problem symptom has gone and the ABS is free from any abnormal conditions. If what has been repaired is related to the malfunction DTC, clear the DTC once referring to “DTC Clearance: ” and perform test driving and confirm that no DTC is indicated.

## ABS Warning Lamp Check

S5JB0A4504002

1) Turn ignition switch ON.
2) Check that ABS warning lamp (1) comes ON for about 2 seconds and then goes off.
   If any faulty condition is found, advance to “ABS Warning Lamp Does Not Come ON at Ignition Switch ON: ”, “ABS Warning Lamp Comes ON Steady: ” or “ABS Warning Lamp Flashes Continuously while Ignition Switch Is ON: ”.

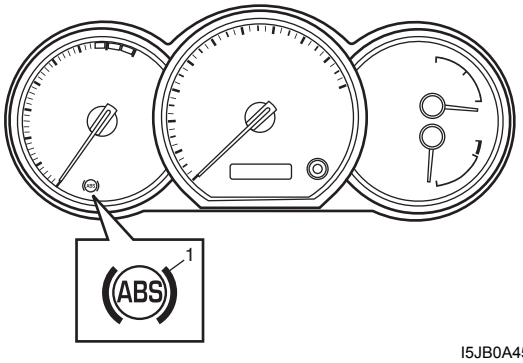


I5JB0A450001-01

## EBD Warning Lamp (Brake Warning Lamp) Check

S5JB0A4504003

**NOTE**

**Perform this check on a level place.**

1) Turn ignition switch ON with parking brake applied.
2) Check that EBD warning lamp (brake warning lamp) (1) is turned ON.
3) Release parking brake with ignition switch ON and check that EBD warning lamp (brake warning lamp) goes off.
   If it doesn’t go off, go to “EBD Warning Lamp (Brake Warning Lamp) Comes ON Steady: ”.

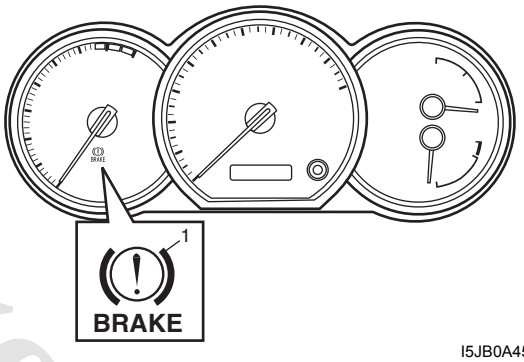


I5JB0A450007-01

## DTC Check

S5JB0A4504004

1) Turn ignition switch to OFF position.
2) Connect SUZUKI scan tool to data link connector (1).

   **Special tool**
   **(A): SUZUKI scan tool**

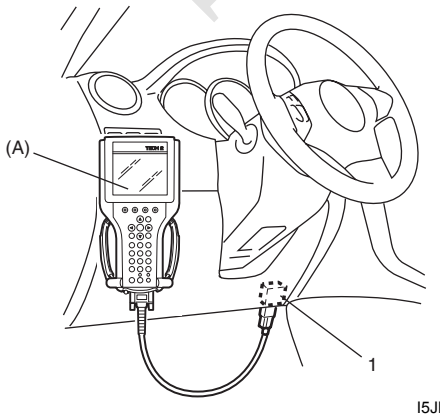


I5JB0A450008-01

www.cargeek.ir

www.CarGeek.ir

3) Turn ignition switch to ON position.
4) Read DTC according to instructions displayed on SUZUKI scan tool and print it or write it down. Refer to SUZUKI scan tool operator's manual for further details.

**NOTE**

**If SUZUKI scan tool can not communicate ABS hydraulic unit / control module, perform "Serial Data Link Circuit Check: ".**

5) After completing the check, turn ignition switch off and disconnect SUZUKI scan tool from DLC.

## DTC Table

S5JB0A4504005

**⚠ CAUTION**

**Be sure to perform "ABS Check: " before starting diagnosis.**

| DTC (displayed on SUZUKI scan tool) | Diagnostic Items | |
|---|---|---|
| NO DTC | Normal | |
| ☞C1015 | G sensor circuit | |
| ☞C1021 | RF | Wheel speed sensor circuit |
| ☞C1025 | LF | |
| ☞C1031 | RR | |
| ☞C1035 | LR | |
| ☞C1022 | RF | Wheel speed sensor or encoder |
| ☞C1026 | LF | |
| ☞C1032 | RR | |
| ☞C1036 | LR | |
| ☞C1041 | RF | Inlet solenoid valve circuit |
| ☞C1042 | | Outlet solenoid valve circuit |
| ☞C1045 | LF | Inlet solenoid valve circuit |
| ☞C1046 | | Outlet solenoid valve circuit |
| ☞C1051 | RR | Inlet solenoid valve circuit |
| ☞C1052 | | Outlet solenoid valve circuit |
| ☞C1055 | LR | Inlet solenoid valve circuit |
| ☞C1056 | | Outlet solenoid valve circuit |
| ☞C1057 | Power source | |
| ☞C1061 | ABS pump motor and/or motor driver circuit | |
| ☞C1063 | Solenoid valve power supply driver circuit | |
| ☞C1071 | ABS control module | |
| ☞U1073 | Control Module Communication Bus Off | |
| ☞U1100 | Lost Communication with ECM (Reception error) | |

## DTC Clearance

S5JB0A4504006

**⚠ WARNING**

**When performing a driving test, select a safe place where there is neither any traffic nor any traffic accident possibility and be very careful during testing to avoid occurrence of an accident.**

After repair or replace malfunction part(s), clear all DTCs by performing the following procedure or using SUZUKI scan tool.

1) Connect SUZUKI scan tool to data link connector in the same manner as when making this connection for DTC check.
2) Turn ignition switch to ON position.
3) Erase DTC according to instructions displayed on scan tool. Refer to scan tool operator's manual for further derails.

**NOTE**

**For DTC C 1021, C1022, C1025, C1026, C1031, C1032, C1035, C1036 and C1061, confirm that ABS warning lamp turns off after performing Step 2 of "Test Driving" under "ABS Check: ", and then clear the DTCs.**

4) After completing the clearance, turn ignition switch OFF and disconnect scan tool from data link connector.
5) Perform "Driving Test" (Step 2 of "ABS Check: ") and "DTC Check: " and confirm that NO DTC is displayed on scan tool.

## Scan Tool Data

S5JB0A4504007

The parameter data below are values measured with the scan tool when the normally operating vehicle is under the following conditions. When taking measurements for comparison by using the scan tool, be sure to check that the vehicle is under the following conditions.

- Apply parking brake and block wheels.
- Ignition switch ON.
- Turn OFF air conditioner (if equipped).
- Apply no load to power steering (if equipped). (Don't turn it)
- Turn OFF all electric loads (except ignition).
- No DTC.
- ABS is not operated. (Normal braking operation)

| Scan Tool Data | Standards | Condition |
|---|---|---|
| Battery Voltage | 10.0 – 16.0 V | — |
| Pump Motor Driver | 0.0 V | — |
| RF Wheel Speed | 0 km/h, 0.0 MPH | Vehicle stop |

www.cargeek.ir

www.CarGeek.ir


| Scan Tool Data | Standards | Condition |
|---|---|---|
| LF Wheel Speed | 0 km/h, 0.0 MPH | Vehicle stop |
| RR Wheel Speed | 0 km/h, 0.0 MPH | Vehicle stop |
| LR Wheel Speed | 0 km/h, 0.0 MPH | Vehicle stop |
| Brake Switch | ON | Brake pedal depressed |
| | OFF | Brake pedal released |
| G sensor | 0 ± 0.09G | Place vehicle on the level |

**Scan Tool Data Definition**

**Battery Volt (V):** Battery Voltage is an analog input signal read by the ABS control module. Certain ABS control module functions will be modified if the battery voltage falls below or rises above programmed thresholds.

**Pump Motor Driver (V):** This parameter indicates the operational condition of the pump motor driver (transistor).

**RF Wheel Speed, LF Wheel Speed, RR Wheel Speed and LF Wheel Speed (km/h, MPH):** Wheel speed is an ABS control module internal parameter. It is computed by reference pulses from the wheel speed sensor.

**Brake Switch (ON, OFF):** This switch signal informs the ABS control module whether the brake is active or not.

**G Sensor (G):** The G-Sensor converts gravity during the vehicle acceleration / deceleration in to a voltage conditions and controls the ABS for 4WD vehicle.

## ABS Warning Lamp Does Not Come ON at Ignition Switch ON

S5JB0A4504008

### Wiring Diagram

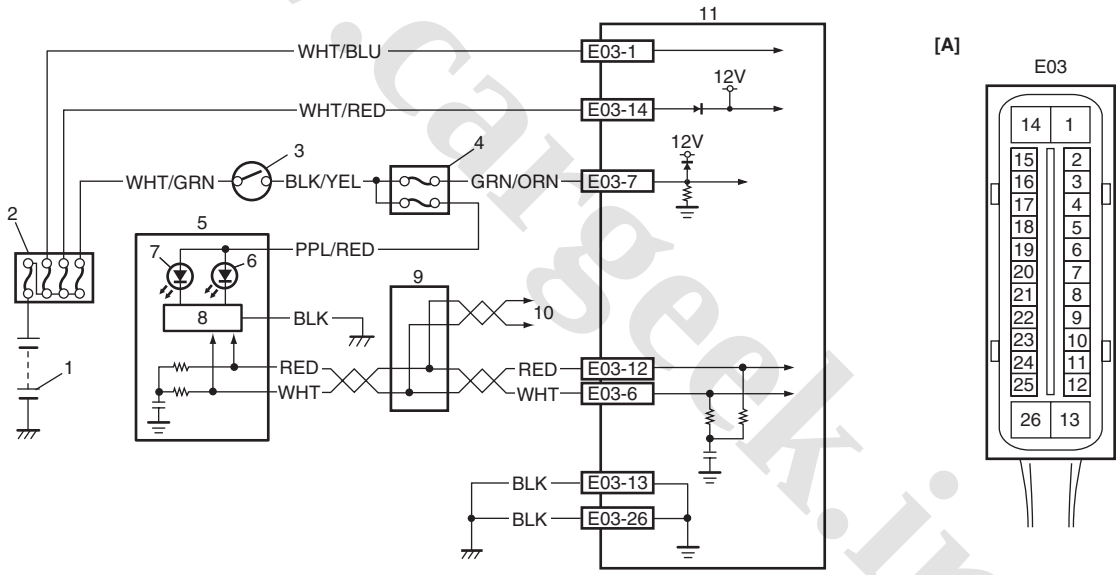


I5JB0A450009-02

| | | |
|---|---|---|
| [A]: ABS hydraulic unit / control module connector (viewed from terminal side) | 4. Circuit fuse (in junction block assembly) | 8. Lamp driver module |
| 1. Battery | 5. Combination meter | 9. CAN junction |
| 2. Main fuse box | 6. ABS warning lamp | 10. To TCM, BCM, 4WD control module and keyless start control module |
| 3. Ignition switch | 7. EBD warning lamp (Brake warning lamp) | 11. ABS hydraulic unit / control module assembly |

www.cargeek.ir

www.CarGeek.ir

**Circuit Description**

Operation (ON/OFF) of ABS warning lamp is controlled by ABS control module through lamp driver module in combination meter.

If the antilock brake system is in good condition, ABS control module turns ABS warning lamp ON at the ignition switch ON, keeps it ON for 2 seconds and then turns it OFF. If an abnormality in the system is detected, ABS warning lamp is turned ON continuously by ABS control module. Also, it is turned ON continuously by lamp driver module when the connector of ABS control module is disconnected.

**Troubleshooting**

| Step | Action | Yes | No |
|---|---|---|---|
| 1 | 1) Turn ignition switch to ON position.<br><br>*Do other warning lamps come ON?* | Go to Step 2. | Go to Step 3. |
| 2 | 1) Connect scan tool to DLC with ignition switch turned OFF.<br>2) Turn ignition switch to OFF position and check DTC.<br><br>*Is there DTC U1073?* | Go to “DTC U1073: Control Module Communication Bus Off: ”. | Substitute a known-good combination meter and recheck. If ABS warning lamp remains OFF, substitute a known-good ABS hydraulic unit / control module assembly and recheck. |
| 3 | *Is Circuit fuse for combination meter in good condition?* | Go to Step 4. | Replace fuse and check for short circuit to ground. |
| 4 | Check CAN communication circuit between combination meter and ABS hydraulic unit / control module referring to “DTC U1073: Control Module Communication Bus Off: ”.<br><br>*Is CAN communication circuit in good condition?* | Go to Step 5. | Repair or replace. |
| 5 | 1) Remove combination meter with ignition switch turned OFF.<br>2) Check for proper connection to “PPL/RED” and “BLK” wire of combination meter connector.<br>3) If OK, turn ON ignition switch and measure voltage at “PPL/RED” wire of combination meter connector and vehicle body ground.<br><br>*Is it 10 – 14 V?* | Go to Step 6. | Repair power supply circuit for combination meter. |
| 6 | 1) Measure resistance between “BLK” wire of combination meter connector and vehicle body ground.<br><br>*Is resistance less than 2 Ω?* | Replace combination meter. | “BLK” circuit open or high resistance. |

www.cargeek.ir

www.CarGeek.ir


## ABS Warning Lamp Comes ON Steady

S5JB0A4504009

### Wiring Diagram

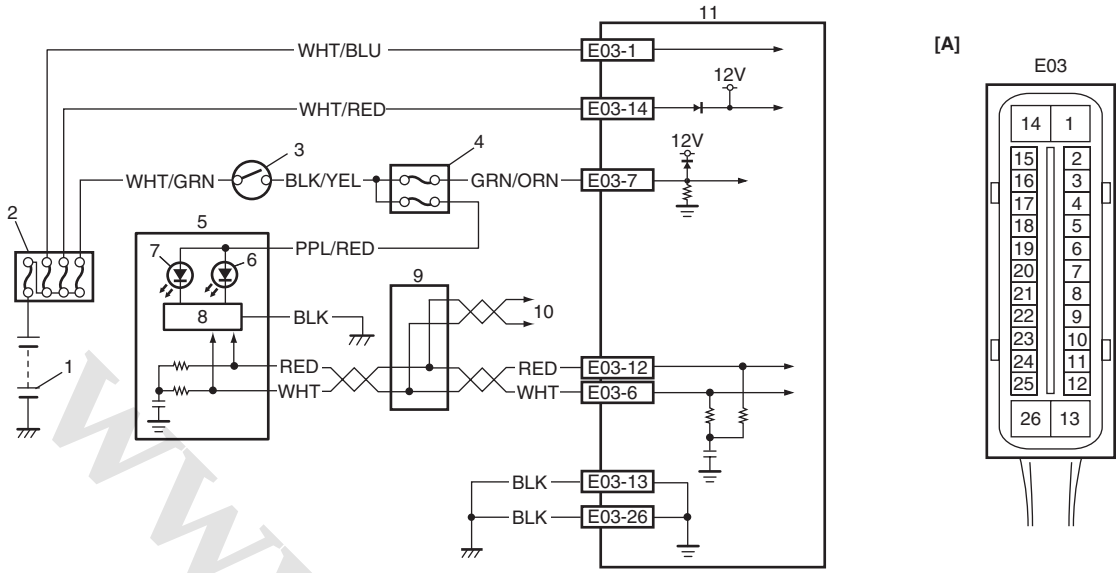


I5JB0A450009-02

| | | |
|---|---|---|
| [A]: ABS hydraulic unit / control module connector (viewed from terminal side) | 4. Circuit fuse (in junction block assembly) | 8. Lamp driver module |
| 1. Battery | 5. Combination meter | 9. CAN junction |
| 2. Main fuse box | 6. ABS warning lamp | 10. To TCM, BCM, 4WD control module and keyless start control module |
| 3. Ignition switch | 7. EBD warning lamp (Brake warning lamp) | 11. ABS hydraulic unit / control module assembly |

### Circuit Description

Operation (ON/OFF) of ABS warning lamp is controlled by ABS control module through lamp driver module in combination meter.

If the Antilock brake system is in good condition, ABS control module turns ABS warning lamp ON at the ignition switch ON, keeps it ON for 2 seconds and then turns it OFF. If an abnormality in the system is detected, ABS warning lamp is turned ON continuously by ABS control module. Also, it is turned ON continuously by lamp driver module when the connector of ABS control module is disconnected.

www.cargeek.ir

www.CarGeek.ir

**Troubleshooting**

| Step | Action | Yes | No |
|---|---|---|---|
| 1 | 1) Perform diagnostic trouble code check.<br>*Is there any DTC(s)?* | Go to Step 7 of “ABS Check: ”. | Go to Step 2. |
| 2 | *Are main fuses for ABS pump motor and ABS solenoid in good condition?* | Go to Step 3. | Replace fuse and check circuit for short to ground. |
| 3 | 1) Turn ignition switch to OFF.<br>2) Disconnect ABS hydraulic unit / control module connector.<br>3) Check for proper connection to ABS hydraulic unit / control module connector at terminals “E03-7”, “E03-13” and “E03-17”.<br>4) If OK then turn ignition switch to ON position and measure voltage between terminal “E03-7” and vehicle body ground.<br>*Is it 10 – 14 V?* | Go to Step 4. | “GRN/ORN” circuit open. |
| 4 | 1) Turn ignition switch to OFF position.<br>2) Check for proper connection to ABS hydraulic unit / control module connector at terminals “E03-1” and “E03-14”.<br>3) If OK then turn ignition switch to ON position and measure voltage between each terminal of “E03-1”, “E03-14” and vehicle body ground.<br>*Are they 10 – 14 V?* | Go to Step 5. | “WHT/RED” and/or “WHT/BLU” circuit open. |
| 5 | 1) Turn ignition switch to OFF and measure resistance between each terminal of “E03-13”, “E03-26” and vehicle body ground.<br>*Is resistance less than 2 Ω?* | Go to Step 6. | Ground circuit for ABS hydraulic unit / control module open or high resistance. |
| 6 | Check CAN communication circuit between combination meter and ABS hydraulic unit / control module referring to “DTC U1073: Control Module Communication Bus Off: ”.<br>*Is CAN communication circuit in good condition?* | Substitute a known-good combination meter and recheck. If ABS warning lamp remains ON, substitute a known-good ABS hydraulic unit / control module assembly and recheck. | Repair or replace. |

www.cargeek.ir

www.CarGeek.ir


## ABS Warning Lamp Flashes Continuously while Ignition Switch Is ON

S5JB0A4504010

### Wiring Diagram

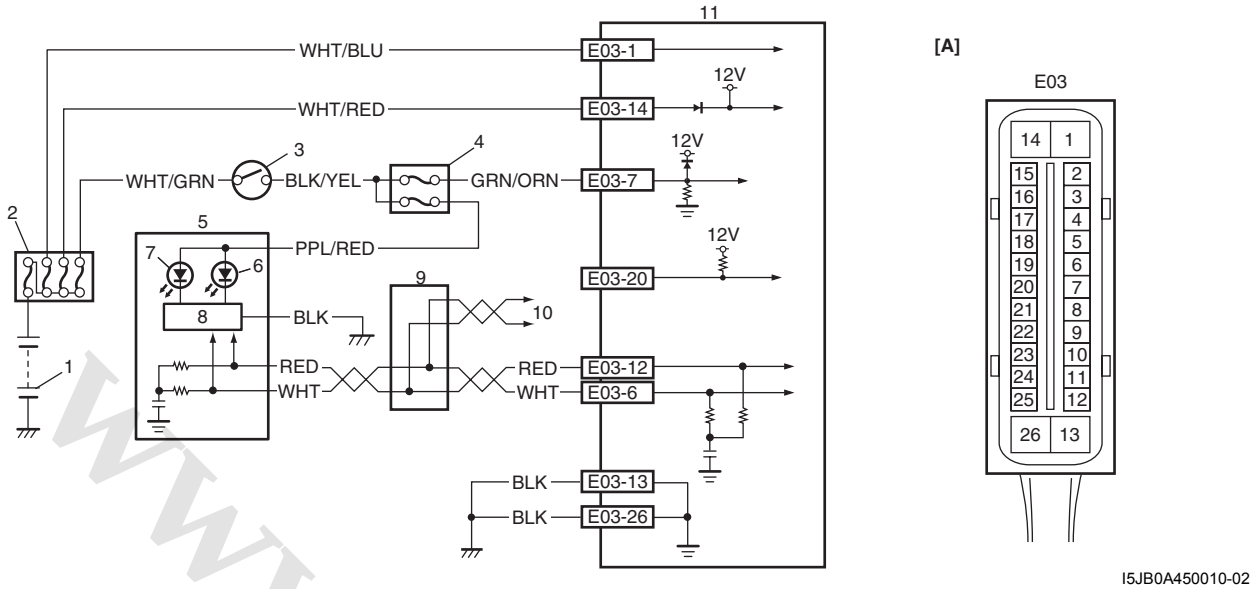


I5JB0A450010-02

| | | |
|---|---|---|
| [A]: ABS hydraulic unit / control module connector (viewed from terminal side) | 4. Circuit fuse (in junction block assembly) | 8. Lamp driver module |
| 1. Battery | 5. Combination meter | 9. CAN junction |
| 2. Main fuse box | 6. ABS warning lamp | 10. To TCM, BCM, 4WD control module and keyless start control module |
| 3. Ignition switch | 7. EBD warning lamp (Brake warning lamp) | 11. ABS hydraulic unit / control module assembly |

### Troubleshooting

| Step | Action | Yes | No |
|---|---|---|---|
| 1 | 1) Check for proper connection to ABS control module at ABS hydraulic unit / control module connector.<br>*Is it in good condition?* | Substitute a known-good ABS hydraulic unit/control module assembly and recheck. | “E03-20” terminal shorted to ground. |

www.cargeek.ir

www.CarGeek.ir

## EBD Warning Lamp (Brake Warning Lamp) Comes ON Steady

S5JB0A4504011

### Wiring Diagram

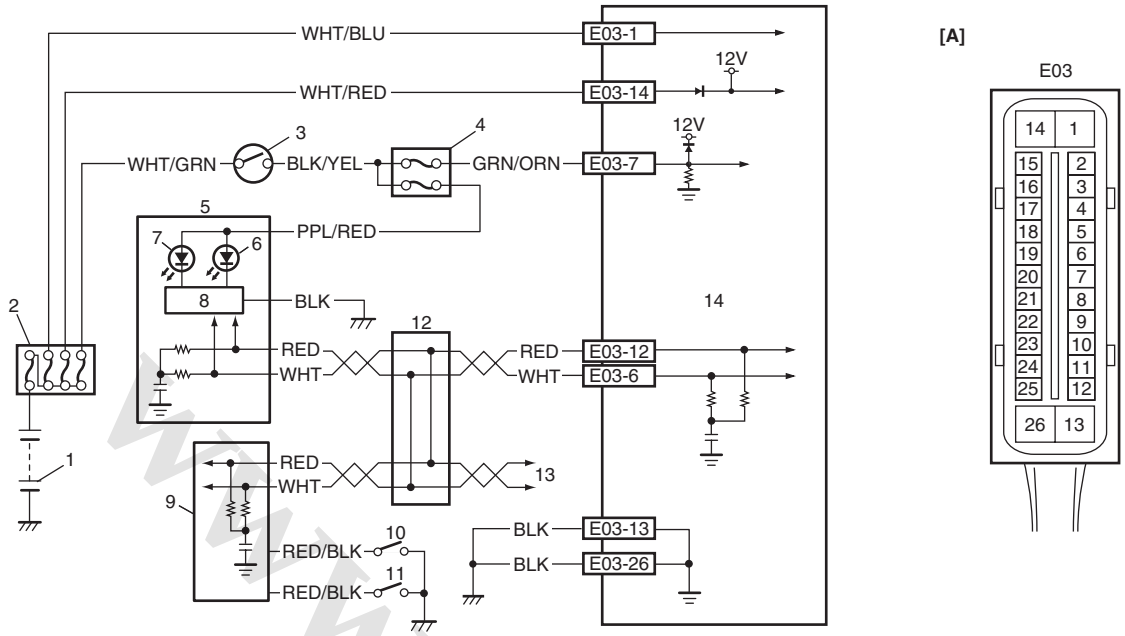


I5JB0A450011-02

| | | |
|---|---|---|
| [A]: ABS hydraulic unit / control module connector (viewed from terminal side) | 5. Combination meter | 10. Parking brake switch |
| 1. Battery | 6. ABS warning lamp | 11. Brake fluid level switch |
| 2. Main fuse box | 7. EBD warning lamp (Brake warning lamp) | 12. CAN junction |
| 3. Ignition switch | 8. Lamp driver module | 13. To TCM, 4DW control module and keyless start control module |
| 4. Circuit fuse (in junction block assembly) | 9. BCM | 14. ABS hydraulic unit / control module assembly |

### Circuit Description

EBD warning lamp (brake warning lamp) is controlled by parking brake switch, brake fluid level switch and ABS hydraulic unit / control module assembly through lamp driver module in combination meter.
EBD warning lamp turns ON when parking brake switch is ON and/or brake fluid level is lower than minimum level.
The information of parking brake switch and brake fluid level are transmitted from BCM to lamp driver module in combination meter through CAN communication line.

### Troubleshooting

| Step | Action | Yes | No |
|---|---|---|---|
| 1 | 1) Make sure that:<br>• Parking brake is completely released.<br>• Brake fluid level is upper than the minimum level.<br>*Are the check results OK?* | Go to Step 2. | Release parking brake completely and/or replenish brake fluid. |
| 2 | 1) Turn ignition switch to ON position.<br>*Does “ABS” warning lamp come on steady?* | Perform “ABS Warning Lamp Comes ON Steady: ” previously outlined. | Go to Step 3. |
| 3 | 1) CAN communication circuit between combination meter, ABS hydraulic unit / control module and BCM referring to “DTC U1073: Control Module Communication Bus Off: ”.<br>*Is CAN communication circuit in good condition?* | Substitute a known-good combination meter and recheck. If ABS warning lamp remains ON, substitute a known-good ABS hydraulic unit / control module assembly and recheck. | Repair or replace. |

www.cargeek.ir

www.CarGeek.ir


## Serial Data Link Circuit Check

S5JB0A4504012

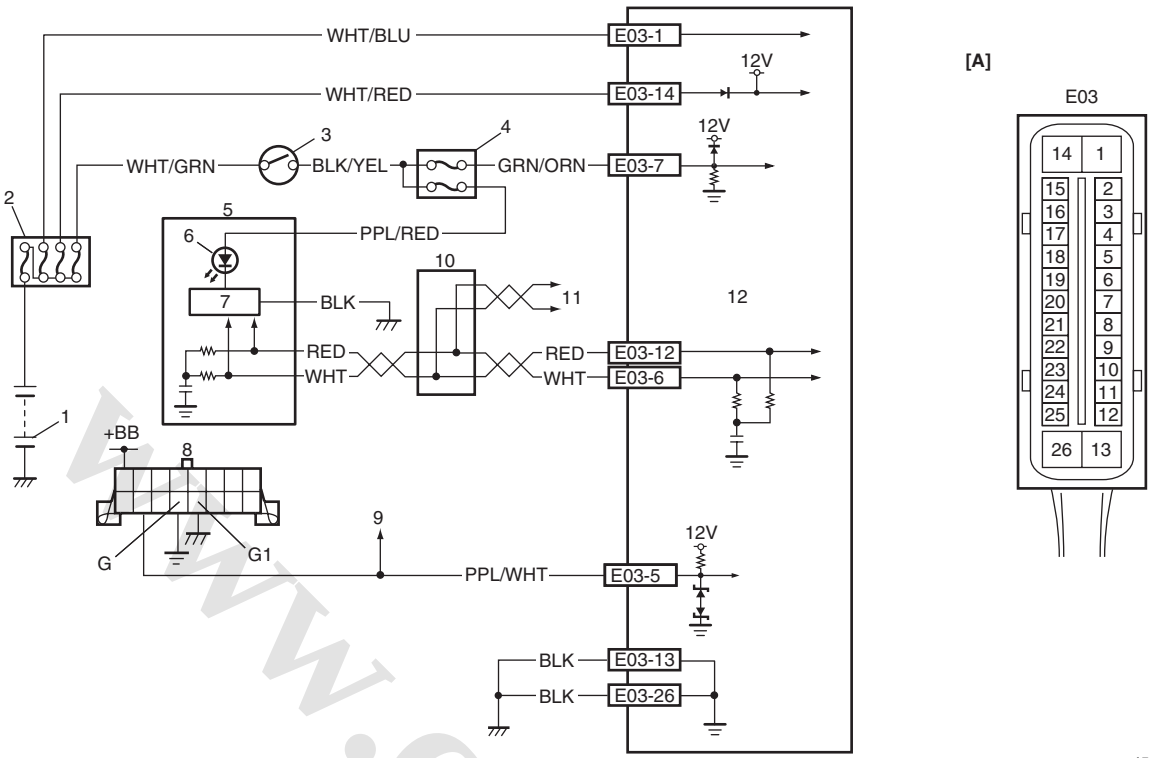


I5JB0A450012-02

| | | |
|---|---|---|
| [A]: ABS hydraulic unit / control module connector (viewed from terminal side) | 5. Combination meter | 10. CAN junction |
| 1. Battery | 6. EBD warning lamp (Brake warning lamp) | 11. To TCM, 4DW control module and keyless start control module |
| 2. Main fuse box | 7. Lamp driver module | 12. ABS hydraulic unit / control module assembly |
| 3. Ignition switch | 8. Data link connector (DLC) | |
| 4. Circuit fuse (in junction block assembly) | 9. To ECM, TCM, BCM, SDM and 4DW control module | |

### Inspection

| Step | Action | Yes | No |
|---|---|---|---|
| 1 | 1) Turn ignition switch to ON position.<br>*Does ABS warning lamp come ON?* | Go to Step 2. | Go to Step 6. |
| 2 | 1) Turn ignition switch to OFF position.<br>*Are main fuses for ABS pump motor and ABS solenoid in good condition?* | Go to Step 3. | Replace fuse and check for short. |
| 3 | 1) Disconnect ABS hydraulic unit / control module connector.<br>2) Check for proper connection to ABS hydraulic unit / control module connector at terminal “E03-7”.<br>3) If OK then turn ignition switch to ON position and measure voltage between terminal “E03-7” and vehicle body ground.<br>*Is it 10 – 14 V?* | Go to Step 4. | “GRN/ORN” wire circuit open. |

www.cargeek.ir

www.CarGeek.ir

| Step | Action | Yes | No |
|---|---|---|---|
| 4 | 1) Turn ignition switch to OFF position.<br>2) Check for proper connection to ABS hydraulic unit / control module connector at terminals “E03-1” and “E03-14”.<br>3) If OK then turn ignition switch to ON position and measure voltage between each terminal of “E03-1”, “E03-14” and vehicle body ground.<br>*Are they 10 – 14 V?* | Go to Step 5. | “WHT/RED” and/or “WHT/BLU” wire circuit open. |
| 5 | 1) Turn ignition switch to OFF position.<br>2) Check for proper connection to ABS hydraulic unit / control module connector at terminals “E03-13” and “E03-26”.<br>3) If OK, measure resistance between each terminal of “E03-13”, “E03-26” and vehicle body ground.<br>*Are resistance less than 2 Ω?* | Go to Step 6. | Ground circuit for ABS hydraulic unit / control module open or high resistance. |
| 6 | 1) Check if communication is possible by trying communication with other controller (ECM, TCM, BCM, 4WD control module or SDM).<br>*Is it possible to communicate with other controller?* | Go to Step 7. | Repair open in common section of serial data circuit (“PPL/WHT” wire circuit) used by all controllers or short to ground or power circuit which has occurred somewhere in serial data circuit (“PPL/WHT” wire circuit). |
| 7 | 1) Turn ignition switch to ON position.<br>2) Measure voltage between terminal B of data link connector and vehicle body ground.<br>*Is voltage 10 – 12 V?* | Go to step 8. | Terminal B circuit open or shorted to ground. |
| 8 | 1) Turn ignition switch to OFF position.<br>2) Measure resistance between the following terminals;<br>• Terminal G of data link connector and vehicle body ground.<br>• Terminal G1 of data link connector and vehicle body ground.<br>*Is each resistance 1 Ω or less?* | Go to step 9. | Terminal G and/or G1 circuit open or high resistance. |

www.cargeek.ir

www.CarGeek.ir


| Step | Action | Yes | No |
|---|---|---|---|
| 9 | 1) Turn ignition switch to OFF position.<br>2) Check proper connection at “E03-5” (“PPL/WHT” wire) terminal for serial data circuit.<br>3) If OK, then check resistance between “E03-5” (“PPL/WHT” wire) terminal and “PPL/WHT” wire terminal (2) for serial data circuit in DLC (1).<br>*Is resistance 1 Ω or less?*<br> 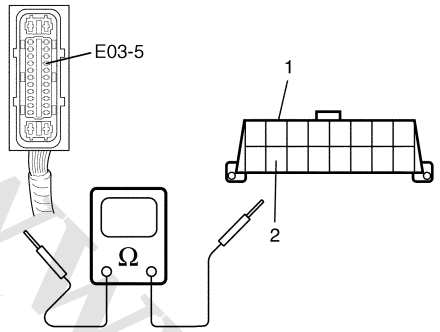 <br><br>I4RS0A450013-02 | Substitute a known-good ABS hydraulic unit / control module and recheck. | Repair high resistance or open in “PPL/WHT” wire circuit for anti lock brake system. |

## DTC C1015: G Sensor Circuit

S5JB0A4504019

### Description

If the signal voltage of G sensor while at a stop does not vary of from that while running, this DTC is set.
Therefore, this DTC may be set when a vehicle is lifted up and its wheel(s) is turned. In such case, clear the DTC and check again.

### DTC Troubleshooting

1) Ignition switch OFF.
2) Check for proper connection from harness to control module.
3) If OK, substitute an ABS hydraulic unit/control module assembly with correct part number.
4) Recheck system.

www.cargeek.ir

www.CarGeek.ir

## DTC C1021, C1022 / C1025, C1026 / C1031, C1032 / C1035, C1036: Right-Front / Left-Front / Right-Rear / Left-Rear Wheel Speed Sensor Circuit or Encoder

S5JB0A4504013

### Wiring Diagram

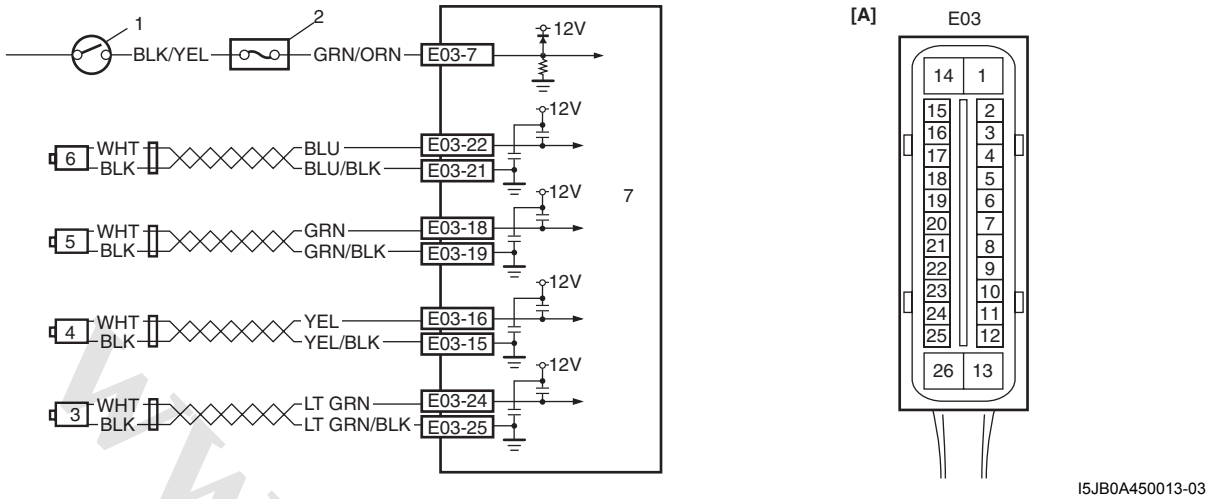


I5JB0A450013-03

| | | |
|---|---|---|
| [A]: ABS hydraulic unit / control module connector (viewed from terminal side) | 3. Right-rear wheel speed sensor | 6. Left-front wheel speed sensor |
| 1. Ignition switch | 4. Left-rear wheel speed sensor | 7. ABS hydraulic unit / control module assembly |
| 2. Circuit fuse (in junction block assembly) | 5. Right-front wheel speed sensor | |

### DTC Detecting Condition

The ABS control module monitors the voltage at the terminal of each sensor while the ignition switch is ON. When the voltage is not within the specified range, an applicable DTC will be set. Also, when no sensor signal is inputted at running, an applicable DTC will be set.

**NOTE**

**When the vehicle was operated in any of the following ways, one of these DTCs may be set even when the sensor is in good condition. If such possibility is suspected, clear DTC once referring to "DTC Clearance: " and then performing the driving test as described in Step 2 of "ABS Check: ", check whether or not any abnormality exists.**

- **The vehicle was driven with parking brake pulled.**
- **Wheel spin occurred while driving.**
- **Wheel(s) was turned while the vehicle was jacked up.**
- **The vehicle was stuck.**

### DTC Troubleshooting

| Step | Action | Yes | No |
|---|---|---|---|
| 1 | *Was "ABS Check" performed?* | Go to Step 2. | Go to "ABS Check: ". |
| 2 | 1) Turn ignition switch OFF.<br>2) Disconnect ABS hydraulic unit / control module connector.<br>3) Check for proper connection to ABS control module at each sensor terminal.<br>4) If OK, then turn ignition switch ON and measure voltage between applicable sensor terminal of module connector and vehicle body ground.<br>*Is it 0 V?* | Go to Step 4. | ABS wheel speed sensor circuit shorted to power. |

www.cargeek.ir

www.CarGeek.ir


| Step | Action | Yes | No |
|---|---|---|---|
| 3 | 1) Disconnect applicable ABS wheel speed sensor coupler with ignition switch OFF.<br>2) Measure resistance between the following points.<br>• Both ABS hydraulic unit / control module connector (1) terminals a pair of applicable sensor terminals. This check result should be no continuity.<br>• Between applicable sensor terminal of ABS hydraulic unit / control module connector and vehicle body ground. This check result should be no continuity.<br>• Between applicable sensor terminal of module connector and corresponding terminal of ABS wheel speed sensor connector (2) in main harness (for front sensor) or floor harness (for rear sensor). This check result should be continuity.<br> 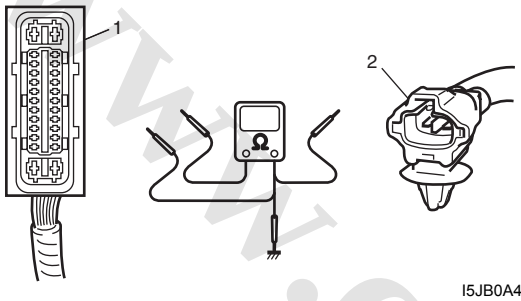 <br><br>I5JB0A450014-02<br>*Are each check results OK?* | Go to Step 4. | Circuit open or short to ground. |
| 4 | 1) Remove applicable ABS wheel speed sensor.<br>2) Check sensor for damage or foreign material attached.<br>*Is it in good condition?* | Go to Step 5. | Clean, repair or replace. |
| 5 | Check front and/or rear encoder for the following (remove front and/or rear drive shaft):<br>• Encoder surface neither crack nor damaged<br>• No foreign material being attached<br>• Encoder not being eccentric<br>• Wheel bearing free from excessive play<br>*Are they in good condition?* | Go to Step 6. | Clean, repair or replace wheel hub assembly. |
| 6 | 1) Install ABS wheel speed sensor to knuckle.<br>2) Tighten sensor bolt to specified torque and check that there is no clearance between sensor and knuckle.<br>*Is it OK?* | Go to Step 7. | Replace ABS wheel speed sensor. |
| 7 | Refer to “Front Wheel Speed Sensor On-Vehicle Inspection: ” and/or “Rear Wheel Speed Sensor On-Vehicle Inspection: ”, check output voltage or waveform.<br>*Is specified voltage and/or waveform obtained?* | Substitute a known-good ABS hydraulic unit / control module assembly and recheck. | Replace sensor and recheck. |

www.cargeek.ir

www.CarGeek.ir

## DTC C1041 / C1045 / C1051 / C1055, DTC C1042 / C1046 / C1052 / C1056: Right-Front / Left-Front / Right-Rear / Left-Rear Inlet Solenoid Circuit, Right-Front / Left-Front / Right-Rear / Left-Rear Outlet Solenoid Circuit

S5JB0A4504014

### Wiring Diagram

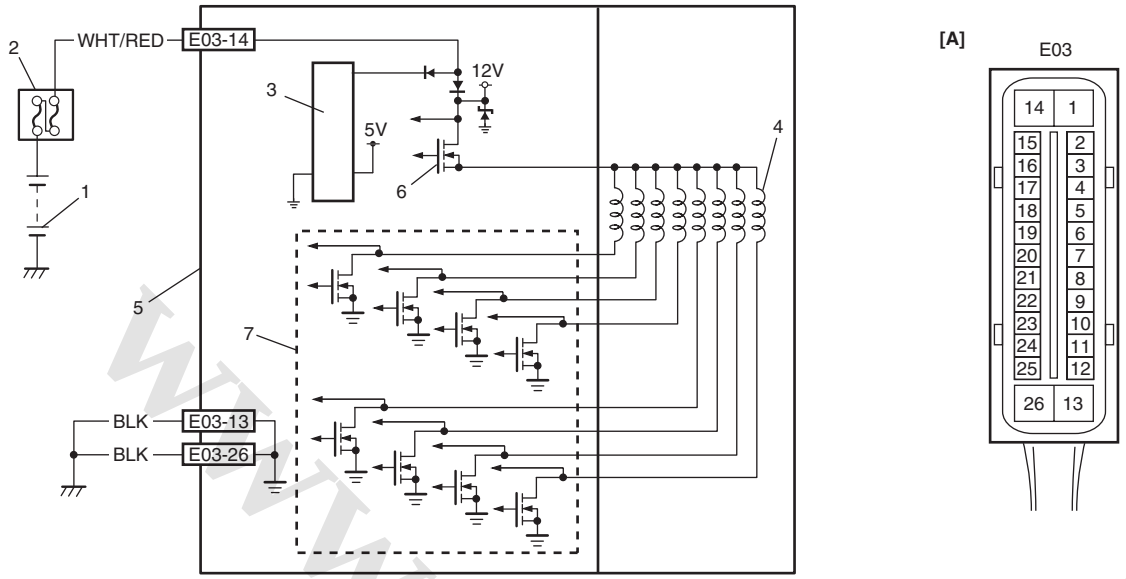


I5JB0A450015-02

| | | |
|---|---|---|
| [A]: ABS hydraulic unit / control module assembly connector (viewed from terminal side) | 3. ABS power control module | 6. Solenoid valve power supply driver (transistor) |
| 1. Battery | 4. Solenoid valve | 7. Solenoid valve driver |
| 2. Main fuse box | 5. ABS hydraulic unit / control module assembly | |

### DTC Detecting Condition

The ABS control module monitors the output from the valve.
When the output of each valve exceeds the specified value compared with the signal sent from ABS control module, this DTC is set.

### DTC Troubleshooting

| Step | Action | Yes | No |
|---|---|---|---|
| 1 | *Was “ABS Check” performed?* | Go to Step 2. | Go to “ABS Check: ”. |
| 2 | 1) Turn ignition switch to OFF position.<br>2) Disconnect ABS hydraulic unit / control module connector.<br>3) Check for proper connection to ABS hydraulic unit / control module connector at terminal “E03-14”.<br>4) If OK, then measure voltage between terminal “E03-14” of module connector and “E03-26”.<br>*Is it 10 – 14 V?* | Substitute a known-good ABS hydraulic unit / control module assembly and recheck. | “WHT/RED” or “BLK” circuit open. |

www.cargeek.ir

www.CarGeek.ir


## DTC C1057: Power Source Circuit

S5JB0A4504015

### Wiring Diagram

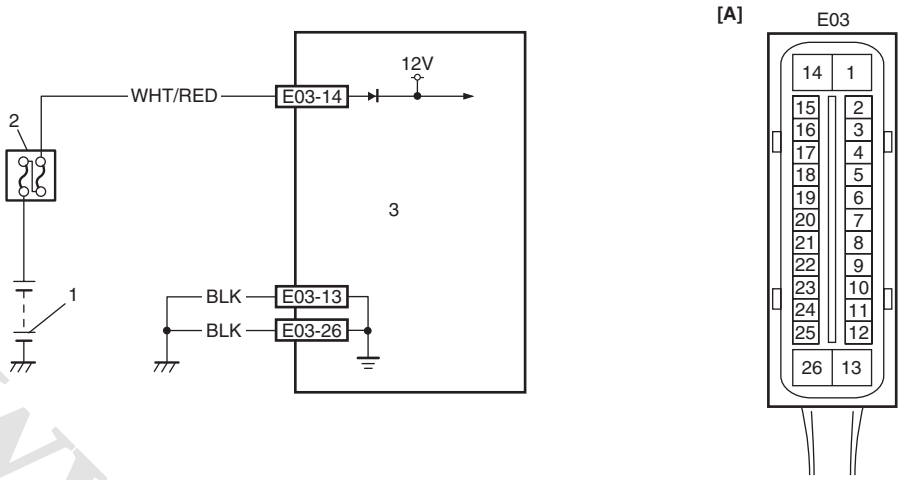


I5JB0A450016-02

| | |
|---|---|
| [A]: ABS hydraulic unit / control module connector (viewed from terminal side) | 2. Main fuse box |
| 1. Battery | 3. ABS hydraulic unit / control module assembly |

### DTC Detecting Condition

The ABS control module monitors the power source voltage at terminal “E03-14”. When the power source voltage becomes extremely high or low while vehicle is running at more than 20 km/h (13 MPH), this DTC will be set. As soon as the power source voltage becomes normal, the ABS warning lamp will be turned off and the ABS control module will return to normal operation, but the set DTC will be remain.

### DTC Troubleshooting

| Step | Action | Yes | No |
|---|---|---|---|
| 1 | *Was “ABS Check” performed?* | Go to Step 2. | Go to “ABS Check: ”. |
| 2 | 1) Disconnect ABS hydraulic unit / control module connector with ignition switch turned OFF.<br>2) Check for proper connection to ABS hydraulic unit / control module connector at terminals “E03-14” and “E03-13”.<br>3) If OK, then turn ignition switch to ON position and measure voltage between terminals “E03-14” and “E03-13”.<br>*Is voltage 9.7 ± 0.3 V or more?* | Go to Step 5. | Go to Step 3. |
| 3 | 1) Turn ignition switch to OFF.<br>2) Check for proper connection to ABS hydraulic unit / control module connector at terminals “E03-13” and “E03-26”.<br>3) If OK then turn ignition switch to ON and measure resistance between each terminal of “E03-13” and “E03-26” and vehicle body ground.<br>*Is resistance less than 2 Ω?* | Go to Step 4. | “BLK” wire circuit in open or high resistance. |
| 4 | 1) Measure voltage between positive battery terminal and vehicle body ground with engine running.<br>*Is voltage 9.7 ± 0.3 V or more?* | Imperfect short between “WHT/RED” wire circuit and body ground. | Check charging system referring to “Generator Test (Undercharged Battery Check): in Section 1J”. |

www.cargeek.ir

www.CarGeek.ir

| Step | Action | Yes | No |
|---|---|---|---|
| 5 | 1) Measure voltage between terminals “E03-14” and “E03-13” with engine running.<br>*Is voltage 18 ± 1.0 V or less?* | Poor connection of “E03-14” and/or “E03-13” terminals. If the terminals are in good condition, substitute a known-good ABS hydraulic unit / control module and recheck. | Check charging system referring to “Generator Test (Overcharged Battery Check): in Section 1J”. |

## DTC C1061: ABS Pump Motor and/or Motor Driver Circuit

S5JB0A4504016

### Wiring Diagram

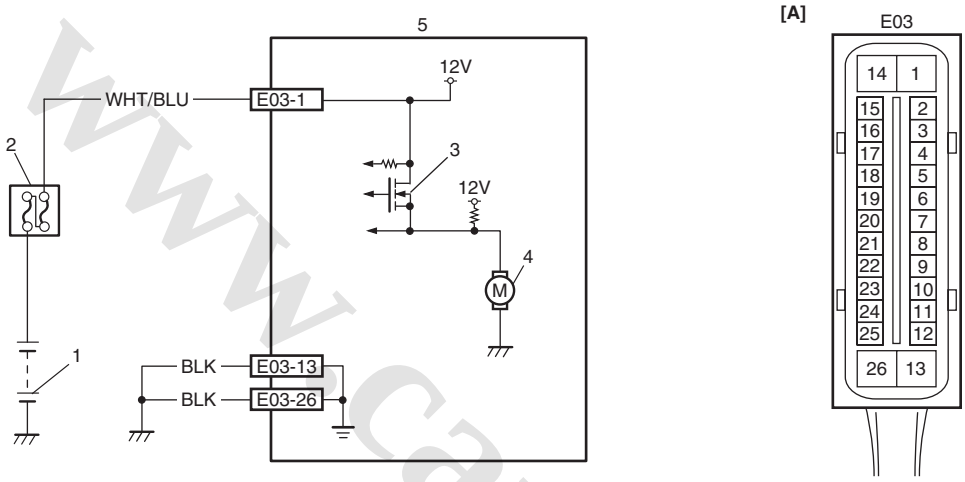


I5JB0A450017-02

| | | |
|---|---|---|
| [A]: ABS hydraulic unit / control module connector (viewed from terminal side) | 2. Main fuse box | 4. ABS pump motor |
| 1. Battery | 3. Pump motor driver (transistor) | 5. ABS hydraulic unit / control module assembly |

### DTC Detecting Condition

The ABS control module monitors the voltage at monitor terminal of pump motor circuit constantly with the ignition switch turned ON. It sets this DTC when the voltage at the monitor terminal does not become high / low according to ON/OFF commands to the motor driver (transistor) of the module (does not follow these commands).

### DTC Troubleshooting

| Step | Action | Yes | No |
|---|---|---|---|
| 1 | *Was “ABS Check” performed?* | Go to Step 2. | Go to “ABS Check: ”. |
| 2 | 1) Turn Ignition switch to OFF position.<br>2) Disconnect ABS hydraulic unit / control module connector.<br>3) Check for proper connection to ABS hydraulic unit / control module connector at terminal “E03-1”.<br>4) If OK, then measure voltage between terminal “E03-1” of module connector and body ground.<br>*Is it 10 – 14 V?* | Go to Step 3. | “WHT/BLU” circuit open. |
| 3 | Measure resistance between terminal “E03-13” and “E03-26” of ABS hydraulic unit / control module connector and vehicle body ground.<br>*Is resistance less than 1 Ω?* | Substitute a known-good ABS hydraulic unit / control module assembly and recheck. | Ground circuit for ABS hydraulic unit / control module open or high resistance. |

www.cargeek.ir

www.CarGeek.ir


## DTC C1063: Solenoid Valve Power Supply Driver Circuit

S5JB0A4504017

### Wiring Diagram

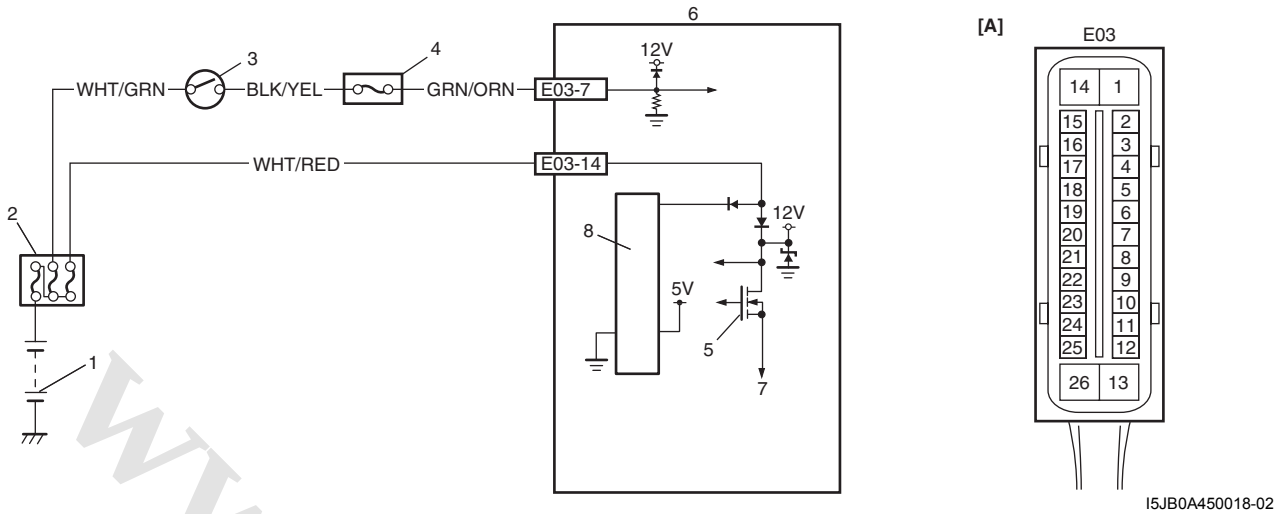


I5JB0A450018-02

| | |
|---|---|
| [A]: ABS hydraulic unit / control module connector (viewed from terminal side) | 5. Solenoid valve power supply driver (transistor) |
| 1. Battery | 6. ABS hydraulic unit / control module assembly |
| 2. Main fuse box | 7. To solenoid valve |
| 3. Ignition switch | 8. ABS power control module |
| 4. Circuit fuse box (in junction block assembly) | |

### DTC Detecting Condition

ABS control module monitors the voltage at the terminal of solenoid circuit constantly with ignition switch turned ON. Also, immediately after ignition switch is turned ON, perform initial check as follows.
Switch solenoid valve power supply driver (transistor) in the order of OFF → ON and check if voltage changes to Low → High. If anything faulty is found in the initial check and when the voltage is low with ignition switch turned ON, this DTC will be set.

### DTC Troubleshooting

| Step | Action | Yes | No |
|---|---|---|---|
| 1 | *Was "ABS Check" performed?* | Go to Step 2. | Go to "ABS Check: ". |
| 2 | Check battery voltage.<br><br>*Is it about 11 V or higher?* | Go to Step 3. | Check charging system referring to "Battery Inspection: in Section 1J" and "Generator Test (Undercharged Battery Check): in Section 1J". |
| 3 | Check main fuse for ABS solenoid and its terminal.<br><br>*Is it in good condition?* | Go to Step 4. | Replace fuse and check for short circuit to ground. |
| 4 | 1) Turn ignition switch to OFF position.<br>2) Disconnect ABS hydraulic unit / control module connector.<br>3) Check for proper connection to ABS hydraulic unit / control module at terminal "E03-14".<br>4) If OK, then measure voltage between connector terminal "E03-14" and body ground.<br><br>*Is it 10 – 14 V?* | Substitute a known-good ABS hydraulic unit / control module assembly and recheck. | "WHT/BLU" circuit imperfect short to ground. |

www.cargeek.ir

www.CarGeek.ir

## DTC C1071: ABS Control Module

S5JB0A4504018

### Wiring Diagram

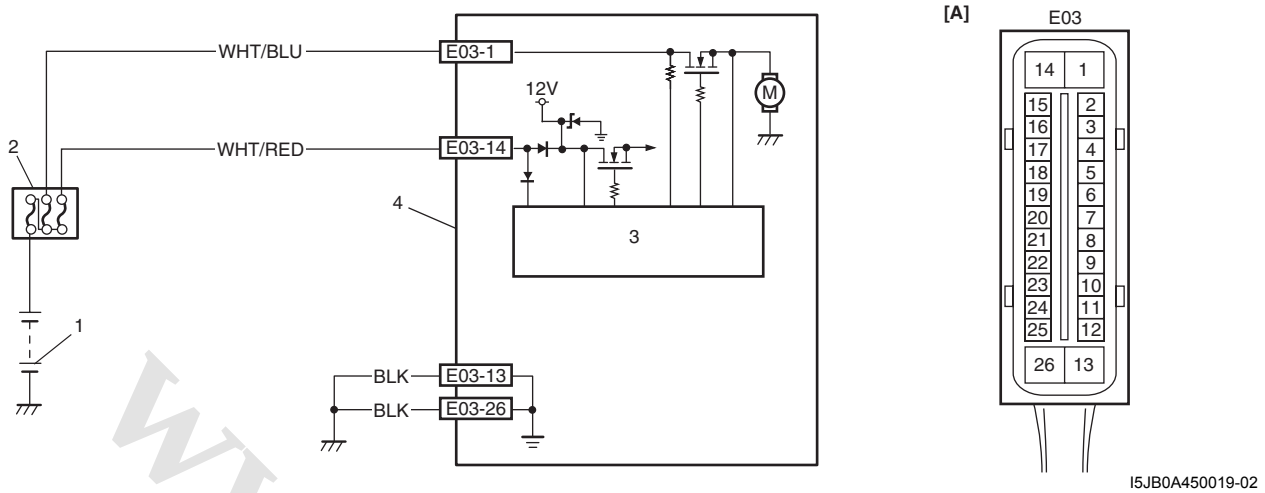


I5JB0A450019-02

| | | |
|---|---|---|
| [A]: ABS hydraulic unit / control module connector (viewed from terminal side) | 2. Main fuse box | 4. ABS hydraulic unit / control module assembly |
| 1. Battery | 3. ABS power control module | |

### DTC Detecting Condition

This DTC will be set when an internal malfunction is detected in the ABS control module.

### DTC Troubleshooting

| Step | Action | Yes | No |
|---|---|---|---|
| 1 | *Was "ABS Check" performed?* | Go to Step 2. | Go to "ABS Check: ". |
| 2 | Clear all DTCs and check DTC.<br><br>*Is it DTC C1071?* | Go to Step 3. | Could be a temporary malfunction of the ABS control module. |
| 3 | 1) Check for proper connection of ABS hydraulic unit / control module connector.<br>2) If OK, disconnect ABS hydraulic unit / control module connector and check the following.<br>• Voltage "E03-1" terminal: 10 – 14 V<br>• Voltage "E03-14" terminal: 10 – 14 V<br>• Resistance between "E03-13" and body ground: Continuity<br>• Resistance between "E03-26" and body ground: Continuity<br><br>*Are the check result as specified?* | Replace ABS hydraulic unit / control module assembly. | Repair "WHT/RED", "WHT/BLU" and/or "BLK" circuit and recheck. |

www.cargeek.ir

www.CarGeek.ir


## DTC U1073: Control Module Communication Bus Off

S5JB0A4504020

### Wiring Diagram

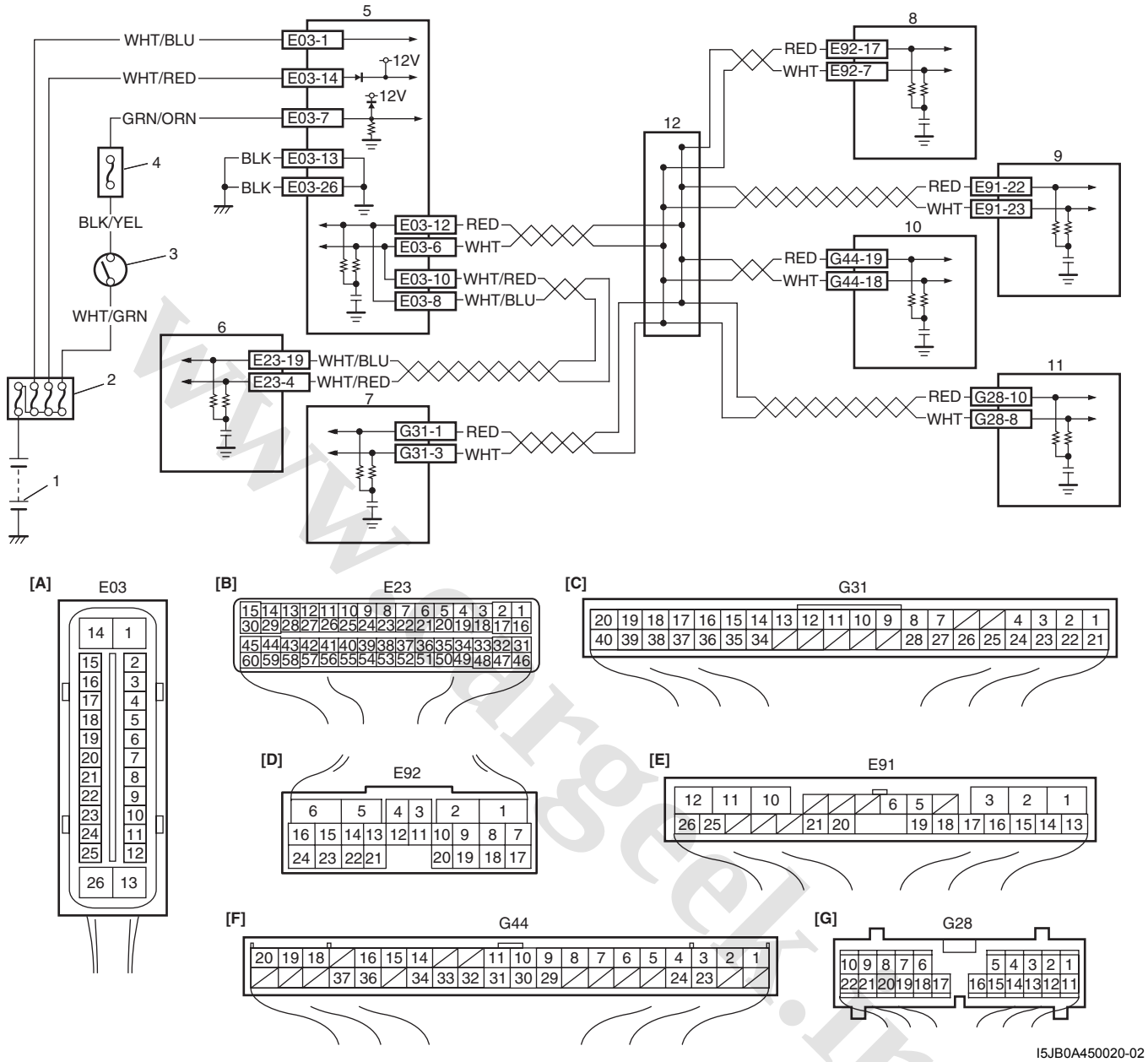


I5JB0A450020-02

| | | |
|---|---|---|
| [A]: ABS hydraulic unit / control module connector (viewed from terminal side) | 1. Battery | 8. TCM (for A/T model) |
| [B]: ECM connector (viewed from harness side) | 2. Main fuse box | 9. 4WD control module (if equipped) |
| [C]: BCM connector (viewed from harness side) | 3. Ignition switch | 10. Keyless start control module (if equipped) |
| [D]: TCM connector (viewed from harness side) | 4. Circuit fuse (in junction block assembly) | 11. Combination meter |
| [E]: 4WD control module connector (viewed from harness side) | 5. ABS hydraulic unit / control module assembly | 12. CAN junction |
| [F]: Keyless start control module connector (viewed from harness side) | 6. ECM | |
| [G]: Combination meter connector (viewed from harness side) | 7. BCM | |

### DTC Detecting Condition

Transmission error that is inconsistent between transmission data and transmission monitor (CAN bus monitor) data is detected more than 7 times continuously.

www.cargeek.ir

www.CarGeek.ir

**DTC Troubleshooting**

| Step | Action | Yes | No |
|---|---|---|---|
| 1 | *Was "ABS Check" performed?* | Go to Step 2. | Go to "ABS Check: ". |
| 2 | 1) Check connection of connectors of all control modules communicating by means of CAN.<br>2) Recheck DTC.<br>*Is DTC U1073 indicated?* | Go to Step 3. | Intermittent trouble. Check for intermittent referring to "Intermittent and Poor Connection Inspection: in Section 00". |
| 3 | 1) Turn ignition switch to OFF position.<br>2) Disconnect connectors of all control modules communicating by means of CAN.<br>3) Check CAN communication circuit between control modules for open, short and high resistance.<br>*Is each CAN communication circuit in good condition?* | Go to Step 4. | Repair insulation of CAN communication line circuit referring to "Precaution for CAN Communication System: in Section 00". |
| 4 | 1) Turn ignition switch to OFF position.<br>2) Connect connectors to ABS hydraulic unit / control module, BCM, TCM (for A/T model), 4WD control module (if equipped), keyless start control module (if equipped) and combination meter.<br>3) Recheck DTC for ABS.<br>*Is DTC U1073 detected?* | Go to Step 5. | Check ECM power and ground circuit. If circuit is OK, substitute a known-good ECM and recheck. |
| 5 | 1) Turn ignition switch to OFF position.<br>2) Disconnect connectors from BCM.<br>3) Recheck DTC for ABS.<br>*Is DTC U1073 detected?* | Go to Step 6. | Check BCM power and ground circuit. If circuit is OK, substitute a known-good BCM and recheck. |
| 6 | **NOTE**<br>**If vehicle equipped with M/T, go to Step 7.**<br>1) Turn ignition switch to OFF position.<br>2) Disconnect connectors from TCM.<br>3) Recheck DTC for ABS.<br>*Is DTC U1073 detected?* | Go to Step 7. | Check TCM power and ground circuit. If circuit is OK, substitute a known-good TCM and recheck. |
| 7 | **NOTE**<br>**If vehicle is not selectable 4WD (motor shift type), go to Step 8.**<br>1) Turn ignition switch to OFF position.<br>2) Disconnect connectors from 4WD control module.<br>3) Recheck DTC for ABS.<br>*Is DTC U1073 detected?* | Go to Step 8. | Check 4WD control module power and ground circuit. If circuit is OK, substitute a known-good 4WD control module and recheck. |
| 8 | **NOTE**<br>**If vehicle is not equipped keyless start system, go to Step 9.**<br>1) Turn ignition switch to OFF position.<br>2) Disconnect connectors from keyless start control module.<br>3) Recheck DTC for ABS.<br>*Is DTC U1073 detected?* | Go to Step 9. | Check keyless start control module power and ground circuit. If circuit is OK, substitute a known-good keyless start control module and recheck. |

www.cargeek.ir

www.CarGeek.ir


| Step | Action | Yes | No |
|---|---|---|---|
| 9 | 1) Turn ignition switch to OFF position.<br>2) Disconnect connectors from combination meter.<br>3) Recheck DTC for ABS.<br>*Is DTC U1073 detected?* | Check ABS power and ground circuit. If circuit is OK, substitute a known-good ABS hydraulic unit / control module assembly and recheck. | Check combination meter power and ground circuit. If circuit is OK, substitute a known-good combination meter and recheck. |

## DTC U1100: Lost Communication with ECM (Reception Error)

S5JB0A4504021

### Wiring Diagram

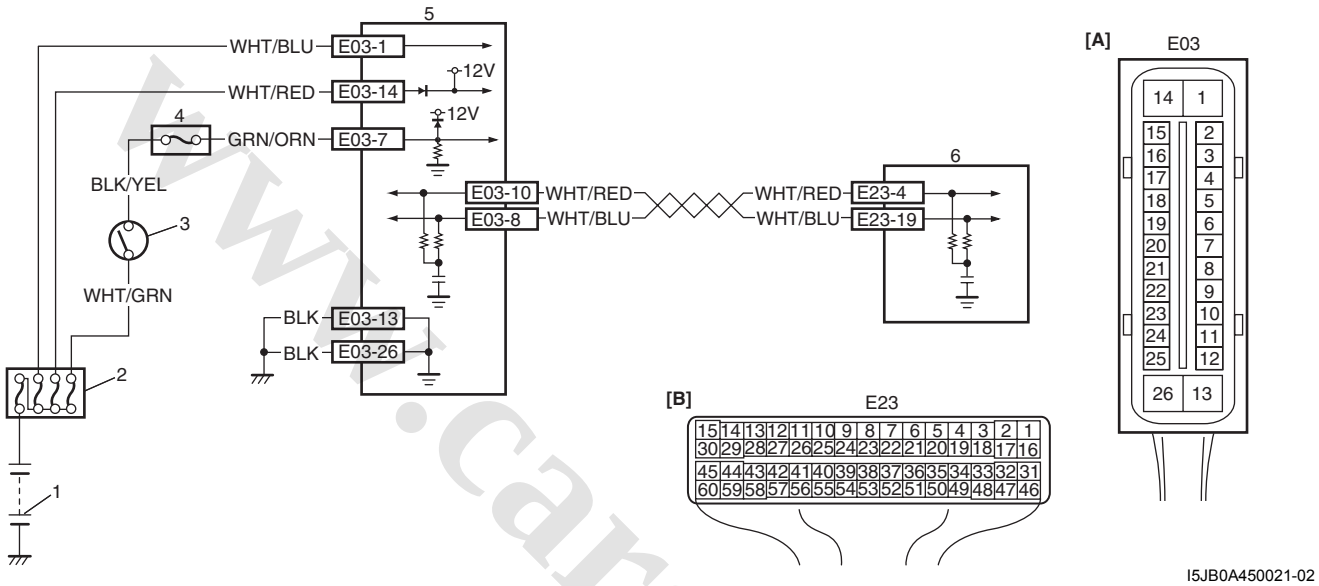


I5JB0A450021-02

| | | |
|---|---|---|
| [A]: ABS hydraulic unit / control module connector (viewed from terminal side) | 2. Main fuse box | 5. ABS hydraulic unit / control module assembly |
| [B]: ECM connector (viewed from harness side) | 3. Ignition switch | 6. ECM |
| 1. Battery | 4. Circuit fuse (in junction block assembly) | |

### DTC Detecting Condition

Reception error of communication data for ECM is detected more than specified time continuously.

### DTC Troubleshooting

| Step | Action | Yes | No |
|---|---|---|---|
| 1 | *Was "ABS Check" performed?* | Go to Step 2. | Go to "ABS Check: ". |
| 2 | Check DTC in ABS.<br>*Is DTC U1073 detected?* | Go to "DTC U1073: Control Module Communication Bus Off: ". | Go to Step 3. |
| 3 | 1) Check for proper connection at each ABS and ECM terminals with ignition switch turned OFF.<br>2) If connections are OK, recheck ABS for DTC with engine running.<br>*Is there DTC U1100?* | Go to Step 4. | Intermittent trouble. Check for intermittent referring to "Intermittent and Poor Connection Inspection: in Section 00". |
| 4 | Check DTC for ECM.<br>*Is DTC P1674, P1676 or P1678 detected?* | Go to applicable DTC diag flow. | Go to Step 5. |

www.cargeek.ir

www.CarGeek.ir

| Step | Action | Yes | No |
|---|---|---|---|
| 5 | 1) Turn ignition switch to OFF position.<br>2) Disconnect connectors of ABS hydraulic unit / control module and ECM.<br>3) Check CAN communication circuit between ABS and ECM for open, short and high resistance.<br>*Is CAN communication circuit in good condition?* | Go to Step 6. | Repair insulation of CAN communication line circuit referring to “Precaution for CAN Communication System: in Section 00”. |
| 6 | 1) Connect connectors of ABS hydraulic unit / control module and ECM.<br>2) Check DTCs for BCM, TCM, 4WD control module (if equipped).<br>*Is DTC U1100 in BCM, DTC P1777 in TCM (for A/T model) and/or DTC U1100 in 4WD control module (if equipped) detected?* | Check ECM power and ground circuit. If circuit is OK, substitute a known-good ECM and recheck. | Check ABS power and ground circuit. If circuit is OK, substitute a known-good ABS hydraulic unit / control module assembly and recheck. |

# Repair Instructions

## ABS Hydraulic Unit Operation Check

S5JB0A4506001

1) Check that basic brake system other than ABS is in good condition.
2) Check that battery voltage is 11 V or higher.
3) Lift up vehicle.
4) Set transmission to neutral and release parking brake.
5) Turn each wheel gradually by hand to check if brake dragging occurs. If it does, correct.
6) Connect SUZUKI scan tool to data link connector (DLC) (1) with ignition switch OFF.

**Special tool**
**(A): SUZUKI scan tool**

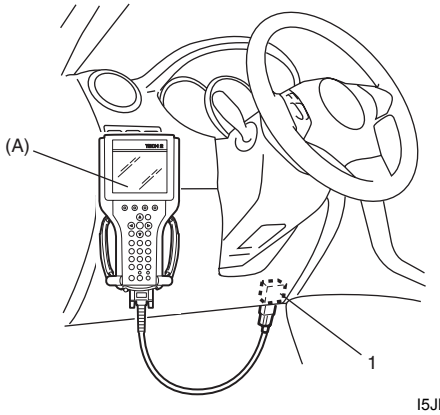


I5JB0A450008-01

7) Turn ignition switch to ON position and select menu to “HYDRAULIC CONTROL TEST” under “miscellaneous test” (“MISC. TEST”) mode of SUZUKI scan tool.
8) Perform the following checks with help of another person.
   Brake pedal (1) should be depressed and then select testing wheel by SUZUKI scan tool and the wheel (2) should be turned by another person’s hand. At this time, check that:
   - Operation sound of solenoid is heard and the wheel turns only about 0.5 sec. (Brake force is depressurized).
   - Operation sound of pump motor is heard and pulsation is felt at brake pedal.

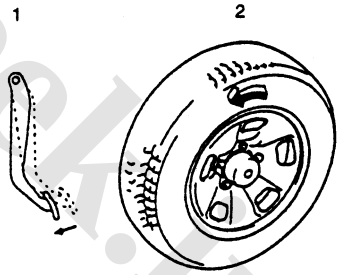


I4RH01450021-01

9) Check for all 4-wheels condition respectively. If a faulty condition is found, replace hydraulic unit / control module assembly.
10) After completing the check, turn ignition switch to OFF position and disconnect SUZUKI scan tool from DLC.

www.cargeek.ir

www.CarGeek.ir


## ABS Hydraulic Unit / Control Module Assembly Components

S5JB0A4506002

**⚠ CAUTION**

**Never disassemble ABS hydraulic unit / control module assembly, loosen blind plug or remove motor. Performing any of these prohibited services will affect original performance of ABS hydraulic unit / control module assembly.**

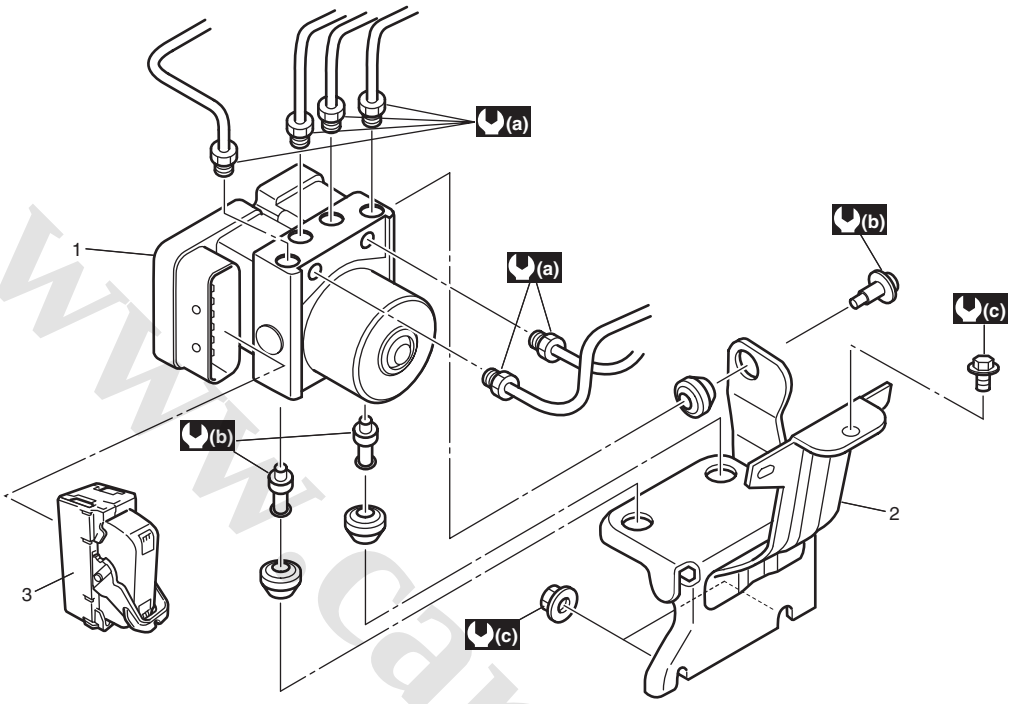


I5JB0A450022-01

| | | |
|---|---|---|
| 1. ABS hydraulic unit / control module assembly | 3. Connector | (b) : 9 N·m (0.9 kgf-m, 6.5 lb-ft) |
| 2. Bracket | (a) : 16 N·m (1.6 kgf-m, 11.5 lb-ft) | (c) : 25 N·m (2.5 kgf-m, 18.0 lb-ft) |

## ABS Hydraulic Unit / Control Module Assembly On-Vehicle Inspection

S5JB0A4506003

**⚠ CAUTION**

**Never disassemble ABS hydraulic unit / control module assembly, loosen blind plug or remove motor. Performing any of these prohibited services will affect original performance of ABS hydraulic unit / control module assembly.**

Check hydraulic unit for fluid leakage.
If any, repair or replace.

www.cargeek.ir

www.CarGeek.ir

## ABS Hydraulic Unit / Control Module Assembly Removal and Installation

S5JB0A4506004

**⚠ CAUTION**

**Never disassemble ABS hydraulic unit / control module assembly, loosen blind plug or remove motor. Performing any of these prohibited services will affect original performance of ABS hydraulic unit / control module assembly.**

### Removal

1) Disconnect negative cable from battery.
2) Remove ECM referring to “Engine Control Module (ECM) Removal and Installation: in Section 1C”.
3) Disconnect ABS hydraulic unit / control module assembly connector (1) by pull down the lock (2).

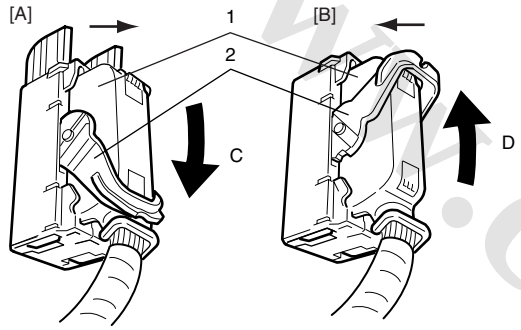


I4RH01450001-01

| | |
|---|---|
| [A]: Disconnect | C: Pull down to disconnect |
| [B]: Connect | D: Pull up to connect |

4) Using special tool, loosen flare nuts (1) and disconnect brake pipes (2) from ABS hydraulic unit / control module assembly (3).

**Special tool**
**(A): 09950–78220**

**NOTE**

**Put bleeder plug cap or the like onto pipe to prevent fluid from spilling. Do not allow brake fluid to get on painted surfaces.**

5) Disconnect harness clamps (4) from bracket (5).

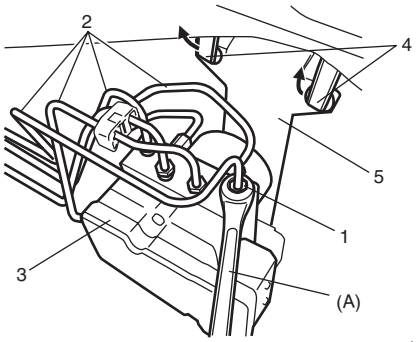


I5JB0A450023-01

6) Remove ABS hydraulic unit / control module with bracket from vehicle by removing bracket bolt and two bracket nuts.
7) Remove bolt and pull out ABS hydraulic unit / control module assembly (1) from bracket (3) using flat end rod or the like (2).

**⚠ CAUTION**

- **Do not give an impact to hydraulic unit.**
- **Use care not to allow dust to enter hydraulic unit.**
- **Do not place hydraulic unit on its side or upside down. Handling it in inappropriate way will affect its original performance.**

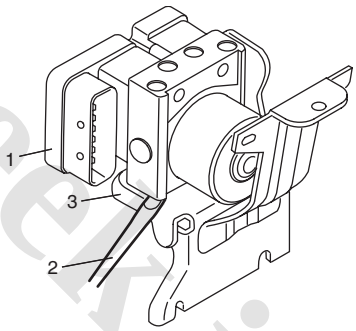


I5JB0A450024-01

www.cargeek.ir

www.CarGeek.ir


**Installation**

1) Install hydraulic unit / control module assembly by reversing removal procedure.

**Tightening torque**
**Brake pipe flare nut (a): 16 N·m (1.6 kgf-m, 11.5 lb-ft)**
**ABS hydraulic unit / control module assembly bolt (b): 9 N·m (0.9 kgf-m, 6.5 lb-ft)**
**ABS hydraulic unit / control module assembly bracket bolt (c): 25 N·m (2.5 kgf-m, 18.0 lb-ft)**
**ABS hydraulic unit / control module assembly bracket nut (d): 25 N·m (2.5 kgf-m, 18.0 lb-ft)**

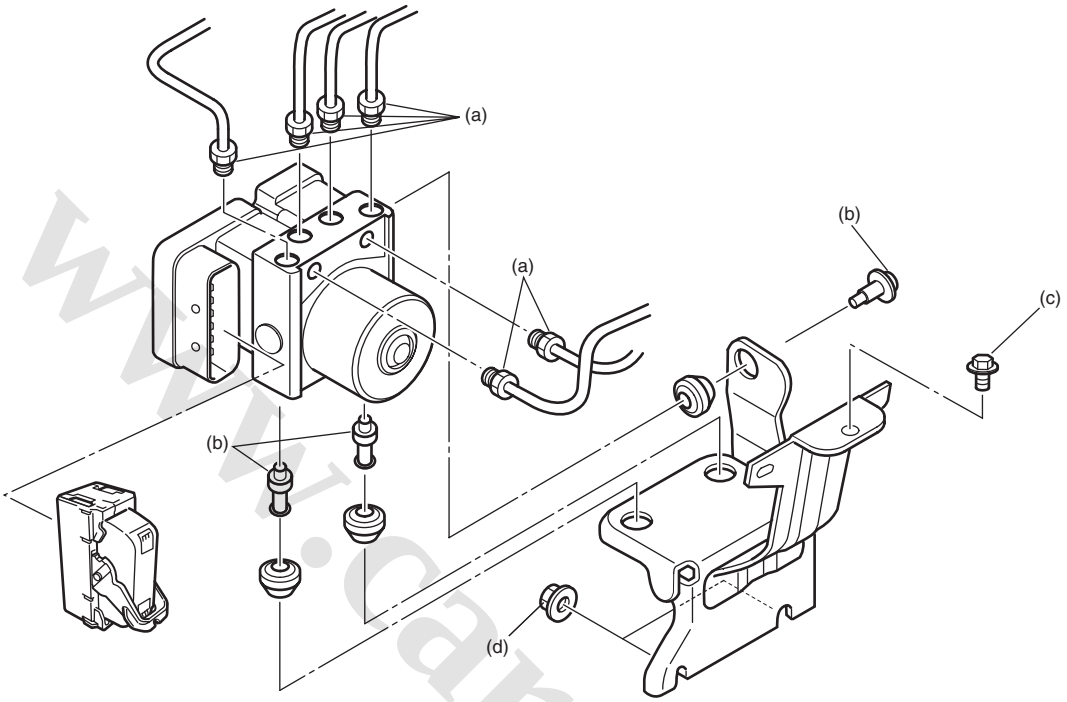


I5JB0A450025-01

2) Connect harness clamp to bracket.
3) Install ECM referring to “Engine Control Module (ECM) Removal and Installation: in Section 1C”.
4) Connect negative cable at battery.
5) Bleed air from brake system referring to “Air Bleeding of Brake System: in Section 4A”.
6) Check each installed part for fluid leakage and perform “ABS Hydraulic Unit Operation Check: ”.

**NOTE**

**For new ABS hydraulic unit / control module assembly, if “ABS Hydraulic Unit Operation Check: ” has not been performed, ABS warning lamp may flash when ignition switch is turned ON position. Accordingly preform “ABS Hydraulic Unit Operation Check: ” to stop flashing of ABS warning lamp.**

www.cargeek.ir

www.CarGeek.ir

## Front Wheel Speed Sensor On-Vehicle Inspection

S5JB0A4506005

### Output Voltage Inspection

1) Disconnect negative cable from battery.
2) Hoist vehicle a little.
3) Disconnect wheel speed sensor connector.
4) Disconnect wheel speed grommet from vehicle body.
5) Set up measuring devices as shown in figure, the resistance to 115 Ω and the power supply voltage to 12 V.

**⚠ CAUTION**

**Incorrect voltage and/or wrong connection cause damage to wheel speed sensor.**

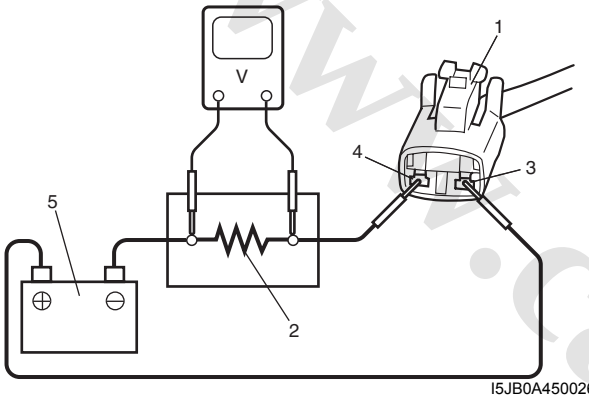


I5JB0A450026-03

| | |
|---|---|
| 1. Wheel speed sensor connector | 4. “BLK” wire terminal |
| 2. Resistance (115 Ω) | 5. Power supply (12 V) |
| 3. “WHT” wire terminal | |

6) Measure voltage at resistance without wheel rotation.
If voltage is out of specification, check sensor, mating encoder and their installation conditions.

**Voltage at the resistance (115 Ω) without wheel rotation**
**680 to 960 mV**

7) Measure voltage at resistance with wheel rotation and confirm voltage alternately changes between high and low voltages.
If voltage does not change with wheel rotation, check sensor, mating encoder and their installation conditions.

**Voltage at the resistance (115 Ω) with wheel rotation**
**High voltage “a”: 1360 to 1930 mV**
**Low voltage “b”: 680 to 960 mV**

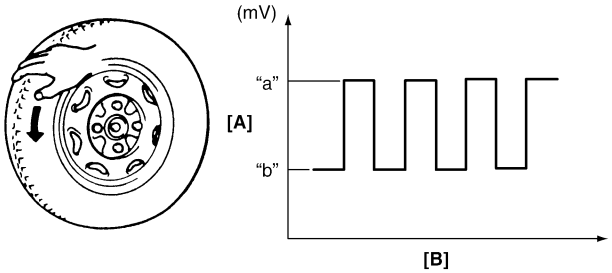


I5JB0A450027-01

| | |
|---|---|
| [A]: Voltage | [B]: Time |

**Reference**
When using oscilloscope for this check, check if peak-to-peak voltage and waveform meet specification.

**Peak-to-peak Voltage at the resistance (115 Ω) with wheel rotation**
**High voltage “a”: 1360 to 1930 mV**
**Low voltage “b”: 680 to 960 mV**

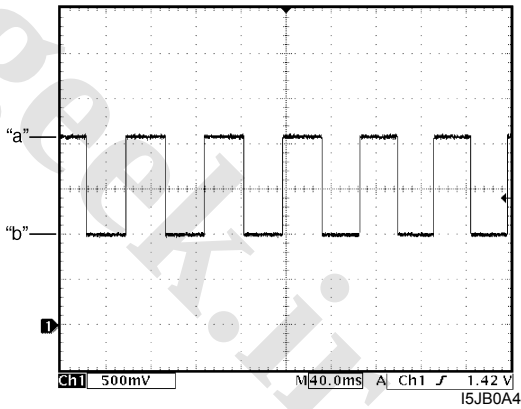


I5JB0A450028-02

www.cargeek.ir

www.CarGeek.ir


## Front Wheel Speed Sensor Removal and Installation

S5JB0A4506006

### Removal

1) Disconnect negative cable from battery.
2) Disconnect front wheel speed sensor coupler (1).
3) Hoist vehicle and remove wheel.
4) Remove harness clamp, clamp bolts (2) and grommet (3).
5) Remove front wheel speed sensor (4) from knuckle.

**⚠ CAUTION**

- **Do not pull wire harness when removing front wheel speed sensor.**
- **Do not cause damage to surface of front wheel speed sensor and do not allow dust, etc. to enter its installation hole.**

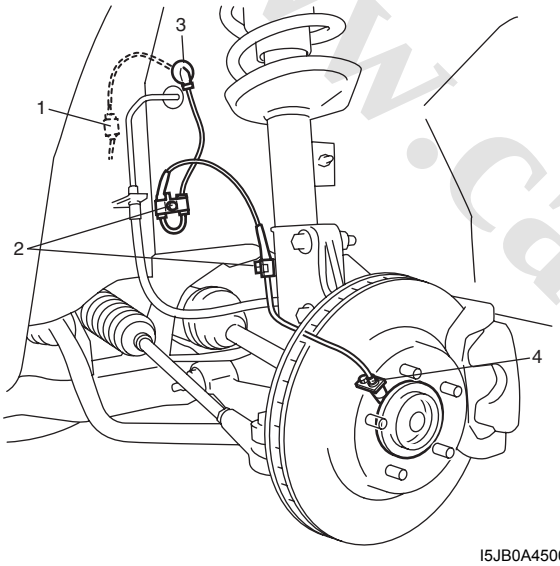


I5JB0A450029-01

### Installation

1) Check that no foreign material is attached to sensor (1) and mating encoder (2).
2) Install it by reversing removal procedure.

**Tightening torque**
**Front wheel speed sensor bolt (a): 11 N·m (1.1 kgf-m, 8.0 lb-ft)**
**Front wheel speed sensor harness clamp bolt (b): 11 N·m (1.1 kgf-m, 8.0 lb-ft)**

**⚠ CAUTION**

**Do not pull or twist wire harness more than necessary when installing front wheel speed sensor.**

3) Check that there is no clearance between sensor and knuckle.

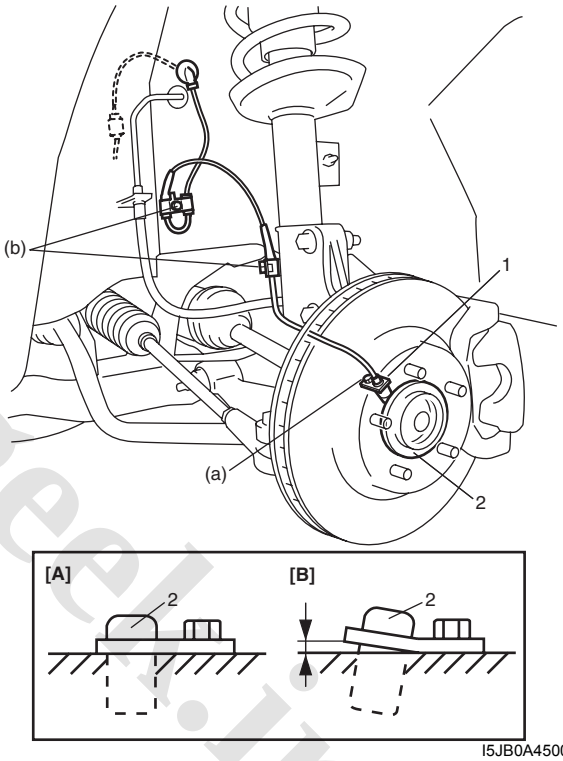


I5JB0A450030-01

| | |
|---|---|
| [A]: OK | [B]: NG |

www.cargeek.ir

www.CarGeek.ir

## Front Wheel Speed Sensor Inspection

S5JB0A4506007

Check sensor for damage.
If any malcondition is found, replace.

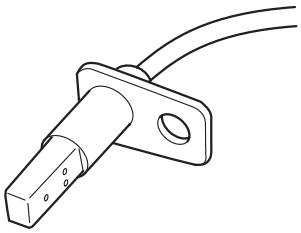

I5JB0A450031-01

## Rear Wheel Speed Sensor On-Vehicle Inspection

S5JB0A4506008

Refer to “Front Wheel Speed Sensor On-Vehicle Inspection: ” since rear wheel speed sensor is the same as front wheel speed sensor.

## Rear Wheel Speed Sensor Removal and Installation

S5JB0A4506009

### Removal

1) Disconnect negative cable from battery.
2) Disconnect rear wheel speed sensor coupler (1).
3) Hoist vehicle and remove wheel.
4) Remove harness clamp (4) and clamp bolts (2).
5) Remove rear wheel speed sensor (3) from knuckle.

**⚠ CAUTION**

- **Do not pull wire harness when removing rear wheel speed sensor.**
- **Do not cause damage to surface of rear wheel speed sensor and do not allow dust, etc. to enter its installation hole.**

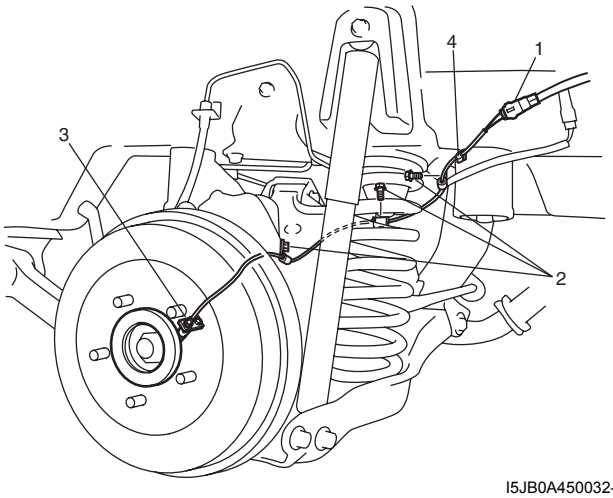


I5JB0A450032-02

### Installation

Reverse removal procedure for installation noting the following.

- Check that no foreign material is attached to sensor (1) and mating encoder (2).
- Be sure to install wheel speed sensor (1) and its bolt at the correct (upper) position as shown in figure. Tighten sensor bolt and harness clamp bolts to specified torque.

  **Tightening torque**
  **Rear wheel speed sensor bolt (a): 11 N·m (1.1 kgf-m, 8.0 lb-ft)**
  **Rear wheel speed sensor harness clamp bolt (b): 11 N·m (1.1 kgf-m, 8.0 lb-ft)**

  **⚠ CAUTION**

  **Do not pull or twist wire harness more than necessary when installing rear wheel speed sensor.**

- Check that there is no clearance between sensor and brake back plate.

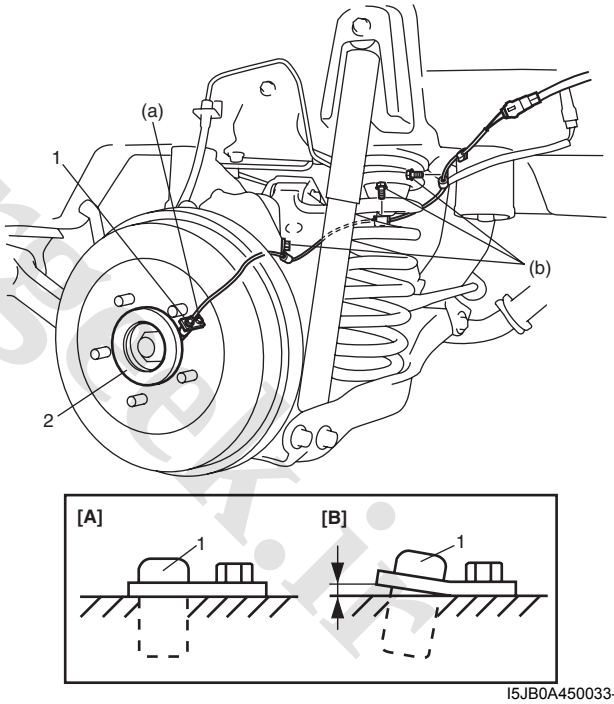


I5JB0A450033-01

| | |
|---|---|
| [A]: OK | [B]: NG |

www.cargeek.ir

www.CarGeek.ir


## Rear Wheel Speed Sensor Inspection

S5JB0A4506010

Refer to “Front Wheel Speed Sensor Inspection: ” since rear wheel speed sensor is the same as front wheel speed sensor.

## Front Wheel Encoder On-Vehicle Inspection

S5JB0A4506011

Before inspect front wheel encoder, remove front drive shaft referring to “Front Drive Shaft Assembly Removal and Installation: Front in Section 3A”.

- Check encoder (1) for being crack, damaged or deformed.
- Turn wheel and check if encoder rotation is free from eccentricity and looseness.
- Check that no foreign material is attached.

If any faulty is found, repair or replace. Refer to “Front Wheel Hub Assembly Removal and Installation:  in Section 2B”.

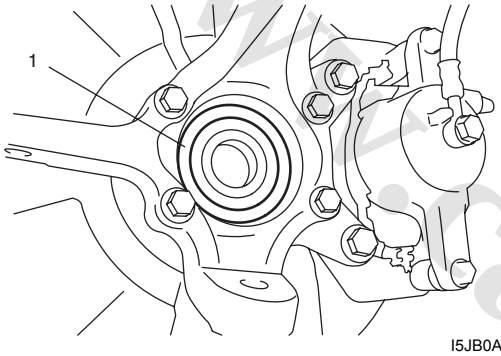


I5JB0A450034-01

## Front Wheel Encoder Removal and Installation

S5JB0A4506012

**⚠ CAUTION**

**Front wheel encoder is included in front wheel hub assembly. If front wheel encoder needs to replaced, replace it as a front wheel hub assembly.**

For removal and installation of front wheel hub assembly, referring to “Front Wheel Hub Assembly Removal and Installation:  in Section 2B”.

## Rear Wheel Encoder On-Vehicle Inspection

S5JB0A4506013

Before inspect rear wheel encoder, remove rear drive shaft referring to “Rear Drive Shaft Assembly Removal and Installation: Rear in Section 3A”.

- Check encoder (1) for being crack, damaged or deformed.
- Turn wheel and check if encoder rotation is free from eccentricity and looseness.
- Check that no foreign material is attached.
  If any faulty is found, repair or replace. Refer to “Rear Wheel Hub Assembly Removal and Installation:  in Section 2C”.

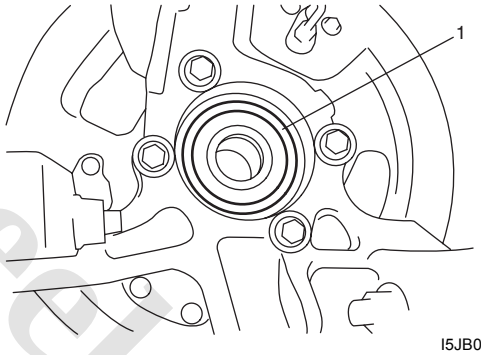


I5JB0A450035-01

## Rear Wheel Encoder Removal and Installation

S5JB0A4506014

**⚠ CAUTION**

**Rear wheel encoder is included in rear wheel hub assembly. If rear wheel encoder needs to replaced, replace it as a rear wheel hub assembly.**

For removal and installation of front wheel hub assembly, referring to “Rear Wheel Hub Assembly Removal and Installation:  in Section 2C”.

www.cargeek.ir

www.CarGeek.ir

# Specifications

## Tightening Torque Specifications

S5JB0A4507001

| Fastening part | Tightening torque | | | Note |
|---|---|---|---|---|
| | N·m | kgf-m | lb-ft | |
| Brake pipe flare nut | 16 | 1.6 | 11.5 | ☞ |
| ABS hydraulic unit / control module assembly bolt | 9 | 0.9 | 6.5 | ☞ |
| ABS hydraulic unit / control module assembly bracket bolt | 25 | 2.5 | 18.0 | ☞ |
| ABS hydraulic unit / control module assembly bracket nut | 25 | 2.5 | 18.0 | ☞ |
| Front wheel speed sensor bolt | 11 | 1.1 | 8.0 | ☞ |
| Front wheel speed sensor harness clamp bolt | 11 | 1.1 | 8.0 | ☞ |
| Rear wheel speed sensor bolt | 11 | 1.1 | 8.0 | ☞ |
| Rear wheel speed sensor harness clamp bolt | 11 | 1.1 | 8.0 | ☞ |

**NOTE**

**The specified tightening torque is also described in the following.**
**“ABS Hydraulic Unit / Control Module Assembly Components: ”**

**Reference:**
For the tightening torque of fastener not specified in this section, refer to “Fastener Information:  in Section 0A”.

# Special Tools and Equipment

## Special Tool

S5JB0A4508001

| | |
|---|---|
| 09950–78220<br>Flare nut wrench (10 mm)<br>☞ | SUZUKI scan tool<br>—<br>This kit includes following items. 1. Tech 2, 2. PCMCIA card, 3. DLC cable, 4. SAE 16/19 adapter, 5. Cigarette cable, 6. DLC loopback adapter, 7. Battery power cable, 8. RS232 cable, 9. RS232 adapter, 10. RS232 loop back connector, 11. Storage case, 12. Power supply ☞ / ☞ 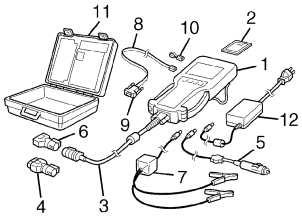  |

www.cargeek.ir

www.CarGeek.ir


# Section 5

# Transmission / Transaxle

## CONTENTS


**Precautions ..... 5-1**
**Precautions ..... 5-1**
Precautions for Transmission / Transaxle ..... 5-1

**Automatic Transmission/Transaxle ..... 5A-1**
**Precautions ..... 5A-1**
Precautions in Diagnosing Trouble ..... 5A-1
General Service Procedure Information ..... 5A-1
Precautions for Disassembly and Reassembly ..... 5A-1
**General Description ..... 5A-3**
Automatic Transmission Description ..... 5A-3
Clutch / Brake Functions of Automatic Transmission ..... 5A-5
Table of A/T System Component Operation ..... 5A-6
CAN Communication System Description ..... 5A-7
Electronic Shift Control Input / Output Table ..... 5A-8
Brake Interlock System Description ..... 5A-11
A/T Diagnosis General Description ..... 5A-11
On-Board Diagnostic System Description ..... 5A-11
**Schematic and Routing Diagram ..... 5A-13**
Automatic Gear Shift Table ..... 5A-13
Bearing and Race Installation Diagram ..... 5A-16
**Component Location ..... 5A-17**
Electronic Shift Control System Components Location ..... 5A-17
**Diagnostic Information and Procedures ..... 5A-18**
A/T System Check ..... 5A-18
Malfunction Indicator Lamp (MIL) Check ..... 5A-20
Transmission Warning Light Operation Check (Vehicle is Equipped with Engine Diagnosis Connector) ..... 5A-20
“POWER” Lamp Operation Check ..... 5A-20
DTC Table ..... 5A-21
DTC Check ..... 5A-22
DTC Clearance ..... 5A-23
Fail Safe Table ..... 5A-24
Scan Tool Data ..... 5A-26
Visual Inspection ..... 5A-29
A/T Basic Check ..... 5A-29
Road Test ..... 5A-30
Manual Road Test ..... 5A-31
Stall Test ..... 5A-32
Time Lag Test ..... 5A-33
Line Pressure Test ..... 5A-33
Engine Brake Test ..... 5A-35
“P” Range Test ..... 5A-35
A/T Symptom Diagnosis ..... 5A-36
No Gear Shift to 4th Gear ..... 5A-43
No Lock-Up Occurs ..... 5A-44
Transmission Warning Light Circuit Check – Light Does Not Come “ON” at Ignition Switch ON (Vehicle is equipped with engine diagnosis connector) ..... 5A-45
Transmission Warning Light Circuit Check – Light Remains “ON” at Ignition Switch ON (Vehicle is equipped with engine diagnosis connector) ..... 5A-45
“POWER” Light Circuit Check – Light Does Not Come “ON” at Ignition Switch ON ..... 5A-46
DTC P0705 Transmission Range Sensor Circuit Malfunction ..... 5A-46
DTC P0707 Transmission Range Sensor Circuit Low ..... 5A-48
DTC P0712 Transmission Fluid Temperature Sensor “A” Circuit Low ..... 5A-50
DTC P0713 Transmission Fluid Temperature Sensor “A” Circuit High ..... 5A-51
DTC P0717 Input / Turbine Speed Sensor Circuit No Signal ..... 5A-52
DTC P0722 Output Speed Sensor Circuit No Signal ..... 5A-53
DTC P0741 / P0742 TCC Circuit Performance or Stuck OFF / TCC Circuit Stuck ON ..... 5A-54
DTC P0751 / P0752 Shift Solenoid-A Performance or Stuck OFF / Shift Solenoid-A Stuck ON ..... 5A-55
DTC P0756 / P0757 Shift Solenoid-B Performance or Stuck OFF / Shift Solenoid-B Stuck ON ..... 5A-56
DTC P0962 Pressure Control Solenoid “A” Control Circuit Low ..... 5A-57
DTC P0963 Pressure Control Solenoid “A” Control Circuit High ..... 5A-58
DTC P0973 / P0976 Shift Solenoid “A” Control Circuit Low / Shift Solenoid “B” Control Circuit Low ..... 5A-59
DTC P0974 / P0977 Shift Solenoid “A” Control Circuit High / Shift Solenoid “B” Control Circuit High ..... 5A-61
DTC P1702 Internal Control Module Memory Check Sum Error ..... 5A-62
DTC P1703 CAN Invalid Data - TCM ..... 5A-62
DTC P1723 Range Select Switch Malfunction ..... 5A-63
DTC P1774: CAN Communication Bus Off ..... 5A-64




www.cargeek.ir

www.CarGeek.ir

DTC P1777: TCM Lost Communication with ECM (Reception Error) ..... 5A-66
DTC P1778: TCM Lost Communication with BCM (Reception Error) ..... 5A-67
DTC P1874 4L Switch Circuit Malfunction (Short) ..... 5A-68
DTC P1875 4L Switch Circuit Malfunction (Open) ..... 5A-69
DTC P1878 Torque Converter Clutch Shudder ..... 5A-71
DTC P2763 Torque Converter Clutch (TCC) Circuit High ..... 5A-71
DTC P2764 Torque Converter Clutch (TCC) Circuit Low ..... 5A-73
Inspection of TCM and Its Circuits ..... 5A-74
TCM Power and Ground Circuit Check ..... 5A-78
**Repair Instructions ..... 5A-80**
A/T Fluid Level Check ..... 5A-80
A/T Fluid Change ..... 5A-81
Manual Selector Assembly Components ..... 5A-81
Manual Selector Assembly Removal and Installation ..... 5A-82
Select Lever Knob Installation ..... 5A-82
Manual Selector Assembly Inspection ..... 5A-82
“3” Position Switch Inspection ..... 5A-82
Select Cable Component ..... 5A-83
Select Cable Adjustment ..... 5A-83
Transmission Range Sensor Removal and Installation ..... 5A-84
Transmission Range Sensor Inspection and Adjustment ..... 5A-84
Key Interlock Cable Removal and Installation ..... 5A-85
Brake and key Interlock System Inspection ..... 5A-87
Mode Select Switch Inspection ..... 5A-88
Input Shaft Speed Sensor Removal and Installation ..... 5A-88
Input Shaft Speed Sensor Inspection ..... 5A-88
Output Shaft Speed Sensor Removal and Installation ..... 5A-89
Output Shaft Speed Sensor Inspection ..... 5A-89
Oil Cooler Hose and Pipe Components ..... 5A-90
Oil Cooler Hose and Pipes Removal and Installation ..... 5A-90
Solenoid Valves (Shift Solenoid-A, Shift Solenoid-B, TCC Pressure Control Solenoid and Pressure Control Solenoid Removal and Installation ..... 5A-91
Solenoid Valves (Shift Solenoid-A, Shift Solenoid-B, TCC Pressure Control Solenoid and Pressure Control Solenoid Inspection ..... 5A-92
Transmission Fluid Temperature Sensor Removal and Installation ..... 5A-93
Transmission Fluid Temperature Sensor Inspection ..... 5A-94
Transmission Control Module (TCM) Removal and Installation ..... 5A-95
A/T Relay Inspection ..... 5A-95
Automatic Transmission Unit Components ..... 5A-96
Automatic Transmission Assembly Dismounting and Remounting ..... 5A-97
Automatic Transmission Unit Disassembly ..... 5A-98
Oil Pump Components ..... 5A-103
Oil Pump Disassembly and Assembly ..... 5A-104
Oil Pump Inspection ..... 5A-104
Overdrive (Planetary Gear Side) Components ..... 5A-106
Overdrive (Planetary Gear Side) Disassembly and Assembly ..... 5A-106
Overdrive (Planetary Gear Side) Inspection ..... 5A-108
Overdrive (Case Side) Components ..... 5A-109
Overdrive (Case Side) Disassembly and Assembly ..... 5A-110
Overdrive (Case Side) Inspection ..... 5A-111
Forward Clutch Components ..... 5A-112
Forward Clutch Disassembly and Assembly ..... 5A-112
Forward Clutch Inspection ..... 5A-114
Direct Clutch Components ..... 5A-115
Direct Clutch Disassembly and Assembly ..... 5A-115
Direct Clutch Inspection ..... 5A-117
Center Support Components ..... 5A-118
Center Support Disassembly and Assembly ..... 5A-119
Center Support Inspection ..... 5A-122
Planetary Gears and Output Shaft Components ..... 5A-123
Planetary Gears and Output Shaft Disassembly and Assembly ..... 5A-124
Planetary Gears and Output Shaft Inspection ..... 5A-125
Valve Body Assembly Components ..... 5A-126
Automatic Transmission Unit Assembly ..... 5A-126
**Specifications ..... 5A-135**
Tightening Torque Specifications ..... 5A-135
**Special Tools and Equipment ..... 5A-136**
Recommended Service Material ..... 5A-136
Special Tool ..... 5A-136

## Manual Transmission/Transaxle ..... 5B-1

**General Description ..... 5B-1**
Manual Transmission Construction ..... 5B-1
**Diagnostic Information and Procedures ..... 5B-2**
Manual Transmission Symptom Diagnosis ..... 5B-2
**Repair Instructions ..... 5B-3**
Manual Transmission Assembly Components ..... 5B-3
Gear Shift Control Lever Rear Case Assembly Components ..... 5B-5
Gear Shift Lever Front Case Assembly Components ..... 5B-6
Gear Shift Shaft and Fork Components ..... 5B-7
Input Shaft Assembly, Output Shaft Assembly and Countershaft Assembly Components ..... 5B-8
Manual Transmission Oil Change ..... 5B-9
Transmission Shift Control Lever Removal and Installation ..... 5B-10
Transmission Shift Control Lever Inspection ..... 5B-10

www.cargeek.ir

www.CarGeek.ir


Back Up Light Switch Removal and Installation ..... 5B-11
Back Up Light Switch Inspection ..... 5B-11
Gear Shift Control Lever Rear Case Assembly Removal and Installation ..... 5B-11
Gear Shift Control Lever Rear Case Assembly Disassembly and Reassembly ..... 5B-12
Gear Shift Control Lever Rear Case Assembly Inspection ..... 5B-12
Gear Shift Lever Front Case Assembly Removal and Installation ..... 5B-12
Gear Shift Lever Front Case Assembly Disassembly and Reassembly ..... 5B-13
Gear Shift Lever Front Case Assembly Inspection ..... 5B-14
Engine Rear Mounting Replacement ..... 5B-14
Manual Transmission Assembly Dismounting and Remounting ..... 5B-14
Manual Transmission Unit Disassembly ..... 5B-17
Manual Transmission Unit Reassembly ..... 5B-18
Locating Spring Inspection ..... 5B-21
Input Shaft Disassembly ..... 5B-21
Input Shaft Inspection ..... 5B-22
Input Shaft Reassembly ..... 5B-23
Countershaft Disassembly and Assembly ..... 5B-25
Countershaft and Reverse Idle Gear Inspection ..... 5B-28
Output Shaft Disassembly and Assembly ..... 5B-29
Output Shaft Inspection ..... 5B-29
Manual Transmission Front Case Disassembly and Assembly ..... 5B-30
Manual Transmission Adapter Case Disassembly and Assembly ..... 5B-30
**Specifications ..... 5B-31**
Tightening Torque Specifications ..... 5B-31
**Special Tools and Equipment ..... 5B-32**
Recommended Service Material ..... 5B-32
Special Tool ..... 5B-32

**Clutch ..... 5C-1**
**General Description ..... 5C-1**
Clutch (Hydraulic Type) Construction ..... 5C-1
**Component Location ..... 5C-2**
Clutch Fluid Pipe and Hose Location ..... 5C-2
**Diagnostic Information and Procedures ..... 5C-2**
Clutch (Hydraulic Type) Symptom Diagnosis ..... 5C-2
Clutch Pedal Height Inspection ..... 5C-3
Clutch Pedal Free Travel Check ..... 5C-3
Clutch Fluid Inspection ..... 5C-3
**Repair Instructions ..... 5C-4**
Clutch Pedal Position (CPP) Switch Removal and Installation ..... 5C-4
Clutch Pedal Position (CPP) Switch Inspection and Adjustment ..... 5C-4
Clutch Fluid Pipe and Hose Removal and Installation ..... 5C-4
Clutch Fluid Pipe and Hose Inspection ..... 5C-5
Clutch Master Cylinder Removal and Installation ..... 5C-5
Clutch Master Cylinder Inspection ..... 5C-6
Clutch Operating Cylinder Assembly Removal and Installation ..... 5C-6
Clutch Cover, Clutch Disc and Flywheel Components ..... 5C-7
Clutch Cover, Clutch Disc and Flywheel Removal and Installation ..... 5C-8
Clutch Cover, Clutch Disc and Flywheel Inspection ..... 5C-9
**Specifications ..... 5C-10**
Tightening Torque Specifications ..... 5C-10
**Special Tools and Equipment ..... 5C-10**
Recommended Service Material ..... 5C-10
Special Tool ..... 5C-10

www.cargeek.ir

www.CarGeek.ir

# Precautions

## Precautions

### Precautions for Transmission / Transaxle

S5JB0A5000001

**Air Bag Warning**
Refer to “Air Bag Warning:  in Section 00”.

**Fastener Caution**
Refer to “Fastener Caution:  in Section 00”.

**Precautions in Diagnosing Trouble (for A/T)**
Refer to “Precautions in Diagnosing Trouble:  in Section 5A”.

**Precautions for Disassembly and Reassembly (for A/T)**
Refer to “Precautions for Disassembly and Reassembly:  in Section 5A”.

www.cargeek.ir

www.cargeek.ir

# Automatic Transmission/Transaxle

## Precautions

### Precautions in Diagnosing Trouble

S5JB0A5100001

- Do not disconnect couplers from TCM, battery cable from battery, TCM ground wire harness from engine or main fuse before checking the diagnostic information (DTC, freeze frame data, etc.) stored in TCM memory. Such disconnection will clear memorized information in TCM memory.
- For vehicle without engine diagnosis connector, diagnostic information stored in TCM memory can be cleared as well as checked by using SUZUKI scan tool or OBD generic scan tool. Before using scan tool, read its Operator's (Instruction) Manual carefully to have good understanding as to what functions are available and how to use it.
  It is indistinguishable which module turns on MIL because not only ECM but also TCM turns on MIL. Therefore, check both ECM and TCM for DTC when MIL lights on.
  When checking TCM for DTC, keep in mind that DTC is displayed on the scan tool as follows depending on the scan tool used.
  - SUZUKI scan tool displays DTC detected by TCM.
  - OBD generic scan tool displays DTC detected by each of ECM and TCM simultaneously.
- For vehicle with engine diagnosis connector, using SUZUKI scan tool the diagnostic information stored in TCM memory can be checked and cleared as well. Before its use, be sure to read Operator's Manual supplied with it carefully to have good understanding of its functions and usage.
- Not using scan tool (if equipped with AT monitor connector), the DTC stored in TCM memory also can be checked and cleared. DTC stored in the TCM memory is outputted by displaying DTC on digital display odometer with diagnosis terminal of monitor connector grounded. If no DTC is stored in TCM memory, DTC 0000 is outputted. If one or more DTCs are stored in TCM memory, they are outputted starting from smallest code number in increasing order. After all DTCs are outputted, all DTCs are outputted repeatedly.
- Be sure to read "Precautions for Electrical Circuit Service: in Section 00" before inspection and observe what is written there.
- TCM and/or ECM replacement:
  When substituting a known-good TCM and/or ECM, check for the following conditions.
  Neglecting this check may result in damage to a good TCM and/or ECM.
  - All relays and actuators have resistance of specified value.
  - MAF sensor, Manifold absolute pressure (MAP) sensor, TP sensor and fuel tank pressure sensor are in good condition. Also, the power circuit of these sensors is not shorted to the ground.
- Communication of ECUs, ECM, TCM, BCM, combination meter, 4WD control module ABS hydraulic unit / control module assembly, and keyless start control module (if equipped), is established by CAN (controller Area Network). Therefore, handle CAN communication line with care referring to "Precaution for CAN Communication System: in Section 00".

### General Service Procedure Information

S5JB0A5100002

When repairing automatic transmission, it is necessary to conduct the on-vehicle test to investigate where the cause of the trouble lies first.
Then whether overhaul should be done or not is determined. If the transmission is disassembled without such preliminary procedure, not only the cause of the trouble would be unknown, but also a secondary trouble may occur and often time would be wasted.

### Precautions for Disassembly and Reassembly

S5JB0A5100003

As the automatic transmission consists of high precision components, the following cautions should be strictly observed when handling its parts in disassembly and reassembly.

- Disassembling valve body assembly is prohibited in principle. However, a few parts can be disassembled. When disassembling valve body component parts, confirm whether these parts are allowed to disassemble or not referring to "Valve Body Assembly Components: ".
- Make sure to wash dirt off from the transmission so that no such dirt will enter the transmission during dismounting and remounting.

www.cargeek.ir

 www.CarGeek.ir

- Select a clean place free from dust and dirt for overhauling.
- Place a rubber mat on the work bench to protect parts from damage.
- Work gloves or shop cloth should not be used. (Use nylon cloth or paper towel.)
- When separating the case joint, do not pry with a screwdriver or such but tap with a plastic hammer lightly.
- Wash the disassembled parts in ATF (Automatic Transmission Fluid) or kerosene (using care not to allow ATF or kerosene to get on your face, etc.) and confirm that each fluid passage is not clogged by blowing air into it. But use ATF to wash the disc, resin washers and rubber parts.
- Replace each gasket, oil seal and O-ring with a new one.
- Apply ATF to sliding or rotating parts before reassembly.
- A new disc should be soaked in ATF at least 2 hours before use.

**Part Inspection and Correction Table**

| Part | Inspect for | Correction |
|---|---|---|
| Casted part, machined part | Small flaw, burr<br>Deep or grooved flaw<br>Clogged fluid passage<br>Flaw on installing surface, residual gasket<br>Crack | Remove with oil stone.<br>Replace part.<br>Clean with air or wire.<br>Remove with oil stone or replace part.<br>Replace part. |
| Bearing | Unsmooth rotation<br>Streak, pitting, flaw, crack | Replace.<br>Replace. |
| Bushing, thrust washer | Flaw, burr, wear, burning | Replace. |
| Oil seal, gasket | Flawed or hardened seal ring<br>Worn seal ring on its periphery or side<br>Piston seal ring, oil seal, gasket, etc. | Replace.<br>Replace.<br>Replace. |
| Gear | Flaw, burr<br>Worn gear tooth | Replace.<br>Replace. |
| Splined part | Burr, flaw, torsion | Correct with oil stone or replace. |
| Snap ring | Wear, flaw, distortion<br>No interference | Replace.<br>Replace. |
| Thread | Burr<br>Damage | Replace.<br>Replace. |
| Spring | Settling, sign of burning | Replace. |
| Clutch disc, brake disc | Wear, burning, distortion, damaged claw | Replace. |
| Clutch plate, brake plate | Wear, burning, distortion, damaged claw | Replace. |
| Sealing surface (where lip contacts) | Flaw, rough surface, stepped wear, foreign material | Replace. |

www.cargeek.ir

www.cargeek.ir

www.CarGeek.ir


# General Description

## Automatic Transmission Description

S5JB0A5101001

This automatic transmission is a full automatic type with 3-speed plus overdrive (O/D).
The torque converter is a 3-element, 1-step and 2-phase type and is equipped with an electronically controlled lock-up mechanism. The gear shift device consists of 3 sets of planetary gear units,3 disc type clutches, 4 disc type brakes and 3 one-way clutches. The gear shift is done by selecting one of 7 positions (“P”, “R”, “N”, “D”, “3”, “2” and “L”) by means of the select lever installed on the floor. Also, by using the P/N mode switch located on the console box, it is possible to select the gear change timing of 2 modes, normal and power.

**4WD**

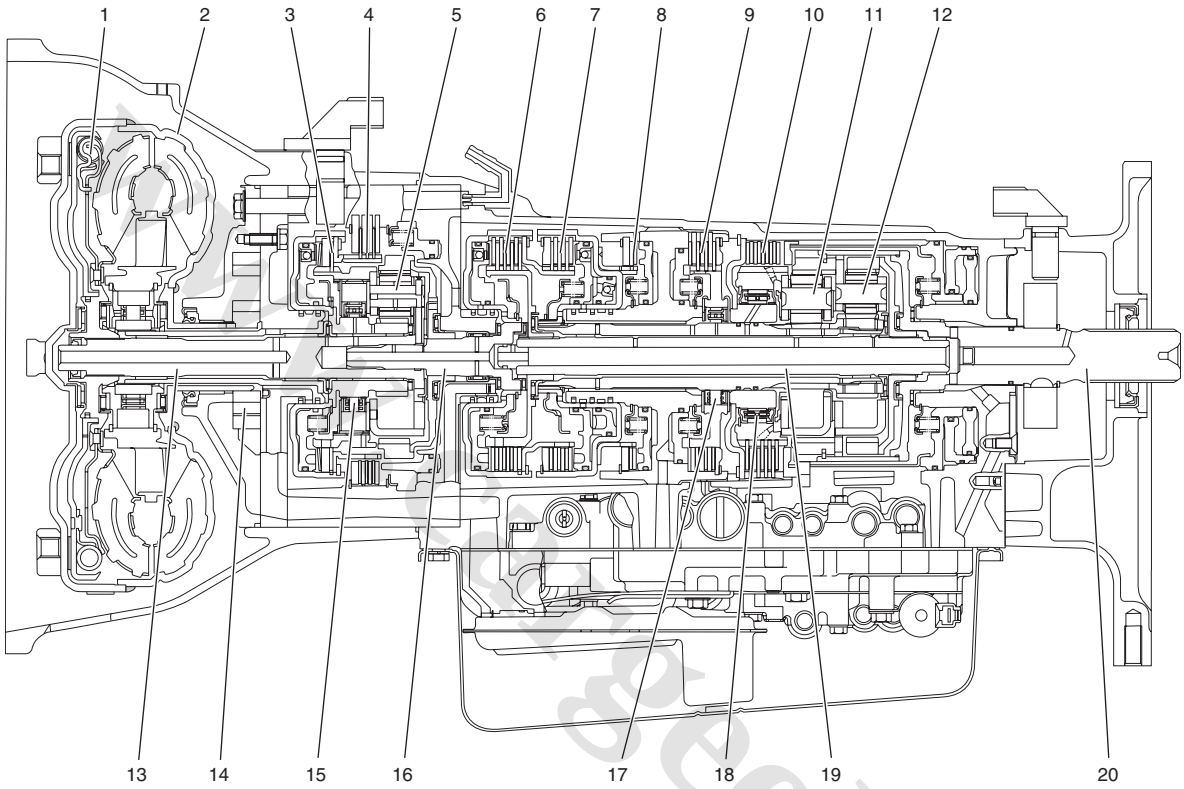


I5JB0A510004-01

| | | |
|---|---|---|
| 1. Torque converter clutch (TCC) | 8. Second coast brake | 15. O/D one-way clutch |
| 2. Torque converter | 9. Second brake | 16. Forward clutch input shaft |
| 3. O/D clutch | 10. Reverse brake | 17. One-way clutch No.1 |
| 4. O/D brake | 11. Front planetary gear | 18. One-way clutch No.2 |
| 5. O/D planetary gear | 12. Rear planetary gear | 19. Intermediate shaft |
| 6. Forward clutch | 13. O/D input shaft | 20. Output shaft |
| 7. Direct clutch | 14. Oil pump | |

www.cargeek.ir

 www.CarGeek.ir

| Item | | | Specifications | |
|---|---|---|---|---|
| Torque converter | Type | | 3-element, 1-step, 2-phase type (with TCC (lock-up) mechanism) | |
| | Stall torque ratio | | 2.05 | |
| Oil pump | Type | | Trochoid type oil pump | |
| | Drive system | | Engine driven | |
| Gear change device | Type | | Forward 4-step, reverse 1-step planetary gear type | |
| | Shift position | | “P” range | Gear in neutral, output shaft fixed, engine start |
| | | | “R” range | Reverse |
| | | | “N” range | Gear in neutral, engine start |
| | | | “D” range | Forward 1st ↔ 2nd ↔ 3rd ↔ 4th (O/D) automatic gear change |
| | | | “D” range (Transfer 4L) | Forward 1st ↔ 2nd ↔ 3rd gear change |
| | | | “3” range | Forward 1st ↔ 2nd ↔ 3rd automatic gear change |
| | | | “2” range (Normal mode) | Forward 1st ↔ 2nd ← 3rd automatic gear change |
| | | | “2” range (Power mode) | Forward 2nd ← 3rd automatic gear change |
| | | | “L” range | Forward 1st ← 2nd reduction, and fixed at 1st gear |
| | Gear ratio | 1st | 2.826 | |
| | | 2nd | 1.493 | |
| | | 3rd | 1.000 | |
| | | 4th | 0.688 | |
| | | Reverse | 2.703 | |
| | Control elements | | Wet type multi-disc clutch ... 3 sets<br>Wet type multi-disc brake ... 4 sets<br>One-way clutch ... 3 sets | |
| | Transfer | | Hi: 1.000<br>Lo: 1.970 | |
| | Final gear reduction ratio | | 5.125 | |
| Lubrication | Lubrication system | | Forced feed system by oil pump | |
| Cooling | Cooling system | | Radiator assisted cooling (water-cooled) | |
| Fluid used | | | SUZUKI ATF 3317 or Mobil ATF 3309 | |

www.cargeek.ir

www.cargeek.ir

## Clutch / Brake Functions of Automatic Transmission

S5JB0A5101002

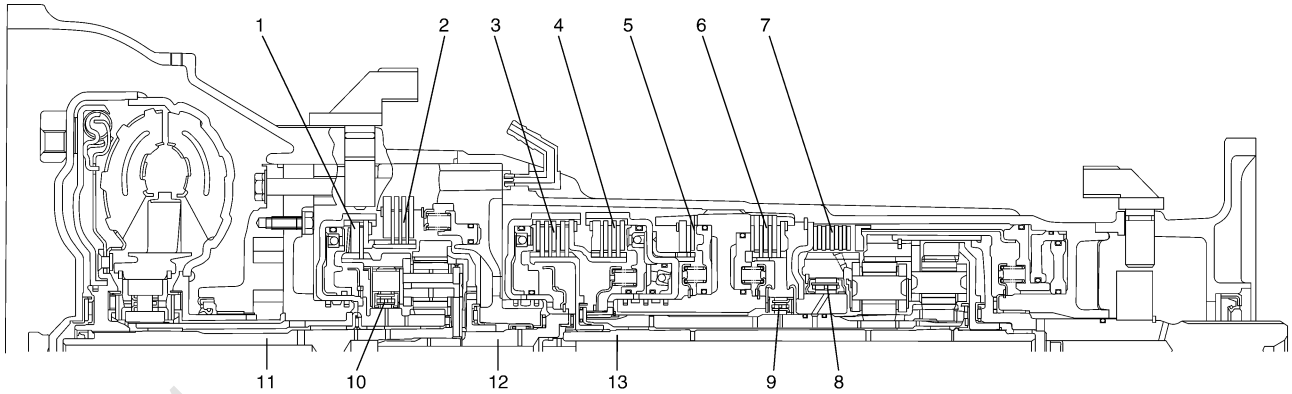


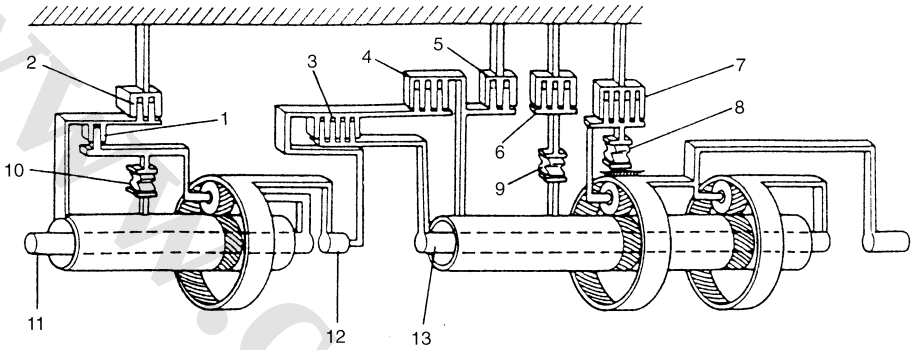


I5JB0A510005-01

| | | | |
|---|---|---|---|
| 1. Overdrive clutch | 5. Second coast brake | 9. One-way clutch No.1 | 13. Intermediate shaft |
| 2. Overdrive brake | 6. Second brake | 10. Overdrive one-way clutch | |
| 3. Forward clutch | 7. Reverse brake | 11. Overdrive input shaft | |
| 4. Direct clutch | 8. One-way clutch No.2 | 12. Forward clutch input shaft | |

| Part Name | Function |
|---|---|
| Overdrive clutch | Meshes overdrive carrier and overdrive sun gear. |
| Overdrive brake | Fixes overdrive sun gear. |
| Overdrive one-way clutch | Meshes overdrive carrier and overdrive sun gear only when driven by engine. |
| Forward clutch | Meshes input shaft and intermediate shaft. |
| Direct clutch | Meshes input shaft with front sun gear and rear sun gear. |
| Second coast brake | Fixes front sun gear and rear sun gear. |
| Second brake | Fixes outer race of one-way clutch No.1, to prevent front sun gear and rear sun gear from turning counterclockwise (reverse direction of engine input rotation direction). |
| Reverse brake | Fixes front planetary carrier. |
| One-way clutch No.1 | Prevents front sun gear and rear sun gear from turning counterclockwise only when second brake is at work. |
| One-way clutch No.2 | Prevents front planetary — carrier from turning counterclockwise. |

www.cargeek.ir

 www.CarGeek.ir

## Table of A/T System Component Operation

S5JB0A5101003

| | | Solenoid valve No. 1–A | Solenoid valve No. 1–B | O/D clutch | Forward clutch | Direct clutch | | O/D brake |
|---|---|---|---|---|---|---|---|---|
| | | | | | | Inner piston | Outer piston | |
| P | | ○ | X | ○ | — | — | — | — |
| R (V ≤ 7 km/h) | | ○ | X | ○ | — | ○ | ○ | — |
| R (V> 7 km/h) | | X | ○ | ○ | — | — | — | — |
| N | | — | — | ○ | — | — | — | — |
| D | 1st gear | ○ | X | ○ | ○ | — | — | — |
| | 2nd gear | ○ | ○ | ○ | ○ | — | — | — |
| | 3rd gear | X | ○ | ○ | ○ | — | ○ | — |
| | O/D | X | X | — | ○ | — | ○ | ○ |
| 2 | 1st gear | ○ | X | ○ | ○ | — | — | — |
| | 2nd gear | ○ | ○ | ○ | ○ | — | — | — |
| | 3rd gear | X | ○ | ○ | ○ | — | ○ | — |
| L | 1st gear | ○ | X | ○ | ○ | — | — | — |
| | 2nd gear | ○ | ○ | ○ | ○ | — | — | — |
| ○: ON, X: OFF | | | | | | | | |

| | | Second coast brake | Second brake | Reverse brake | | O/D one-way clutch | One-way clutch No. 1 | One-way clutch No. 2 |
|---|---|---|---|---|---|---|---|---|
| | | | | Inner piston | Outer piston | | | |
| P | | — | — | — | — | ○ | — | — |
| R (V ≤ 7 km/h) | | — | — | ○ | ○ | ○ | — | — |
| R (V> 7 km/h) | | — | — | — | — | — | — | ○ |
| N | | — | — | — | — | ○ | — | — |
| D | 1st gear | — | — | — | — | ○ | — | ○ |
| | 2nd gear | — | ○ | — | — | ○ | ○ | — |
| | 3rd gear | — | ○ | — | — | ○ | — | — |
| | O/D | — | ○ | — | — | — | — | — |
| 2 | 1st gear | — | — | — | — | ○ | — | ○ |
| | 2nd gear | ○ | ○ | — | — | ○ | — | — |
| | 3rd gear (Fail safe) | — | ○ | — | — | ○ | — | — |
| L | 1st gear | — | — | ○ | ○ | ○ | — | — |
| | 2nd gear (Fail safe) | ○ | ○ | — | — | ○ | — | — |
| ○: ON, X: OFF | | | | | | | | |

www.cargeek.ir

www.CarGeek.ir


## CAN Communication System Description

S5JB0A5101008

Refer to “CAN Communication System Description: in Section 1A” for CAN communication system description.
TCM communicates control data with each control module as follows.

### TCM Transmission Data

| | | | | ECM | BCM | Combination Meter | 4WD control module |
|---|---|---|---|---|---|---|---|
| TCM | Transmit | DATA | Torque reduction request | ○ | | | |
| | | | Slip control signal | ○ | | | |
| | | | Transmission malfunction indication ON | ○ *1 | | ○ *1 | |
| | | | Transmission emissions related malfunction active | ○ *2 | | ○ *2 | |
| | | | Transmission gear selector position | ○ | ○ | ○ | ○ |
| | | | Transmission diagnostic trouble codes | | | ○ | |

I5JB0A510006-01

**NOTE**

***1: Vehicle is equipped with engine diagnosis connector only.**
***2: Vehicle is not equipped with engine diagnosis connector only.**

### TCM Reception Data

| | | | | ECM | BCM |
|---|---|---|---|---|---|
| TCM | Receive | DATA | Engine torque signal | ○ | |
| | | | Accelerator pedal position | ○ | |
| | | | Engine speed | ○ | |
| | | | 4th gear inhibit | ○ | |
| | | | Torque converter clutch control inhibit | ○ | |
| | | | Lock up/ slip control inhibit signal | ○ | |
| | | | Throttle position | ○ | |
| | | | Stand by to engage air conditioning compressor | ○ | |
| | | | Engine coolant temperature | ○ | |
| | | | Cruise control signal (if equipped with cruise control system) | ○ | |
| | | | Vehicle speed | ○ | |
| | | | Brake pedal switch active | ○ | |
| | | | AT mode status | | ○ |
| | | | Air conditioning compressor clutch engaged (if equipped with A/C) | ○ | |

I5JB0A510007-03

www.cargeek.ir

 www.CarGeek.ir

## Electronic Shift Control Input / Output Table

S5JB0A5101004

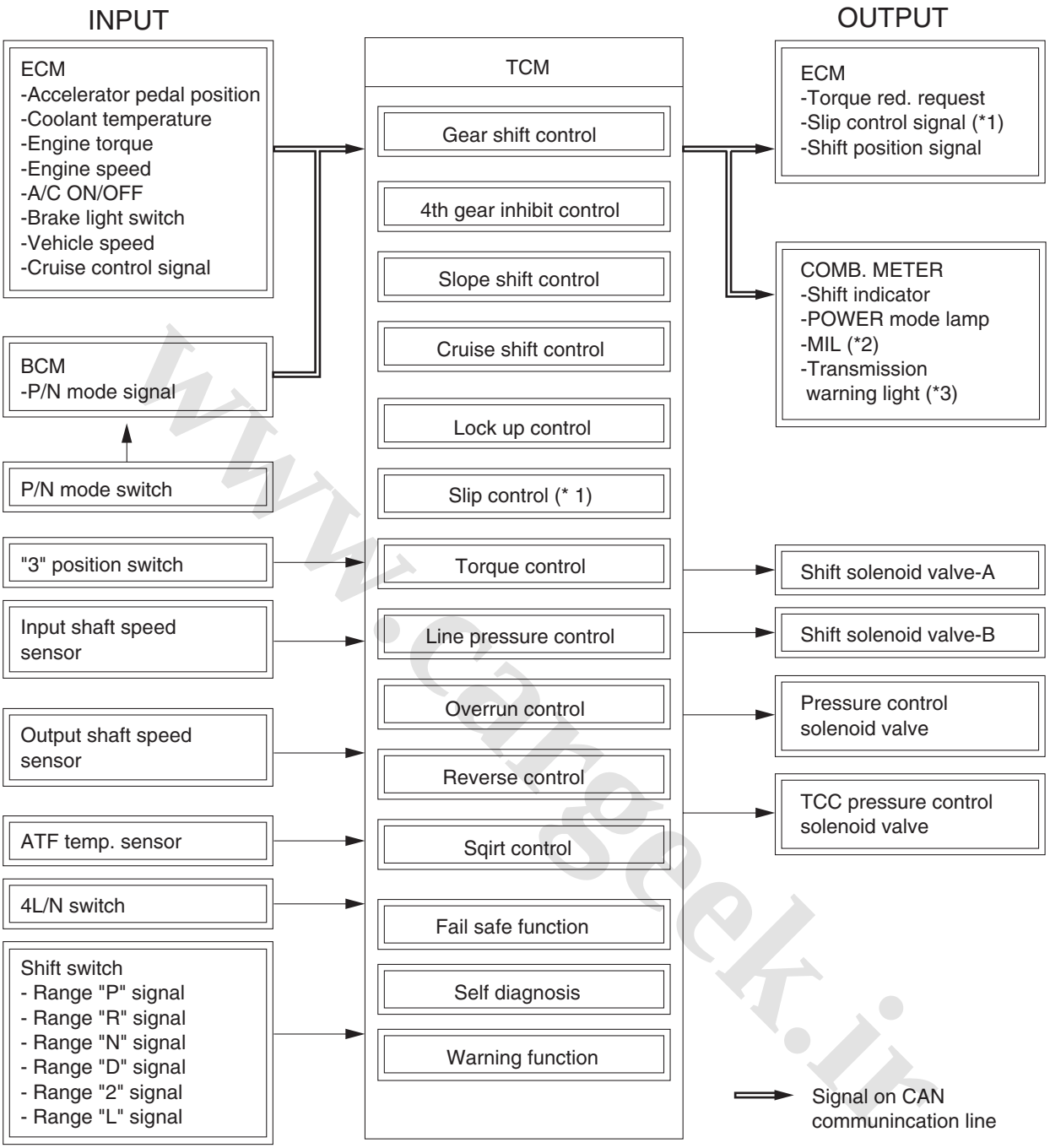


I5JB0A510008-02

**NOTE**

***1: For vehicle not equipped with engine diagnosis connector model (Except RH steering vehicle not equipped with rear fog light model)**
***2: For vehicle not equipped with engine diagnosis connector model**
***3: For vehicle equipped with engine diagnosis connector model**

www.cargeek.ir

| | INPUT / OUTPUT \ CONTROL | Gear Shift control | 4th gear inhibit control | Slope shift control | Cruise shift control | Lock-up control | Slip control | Line pressre control | Torque control | Overrun control | Reverse control | Squirt control | Speed meter indicate |
|---|---|---|---|---|---|---|---|---|---|---|---|---|---|
| Input | Accelerator effective position | ○ | | ○ | ○ | ○ | ○ | ○ | ○ | | | | |
| | Throttle position | | | | ○ | | | | | | | | |
| | Coolant temperature | | ○ | | | ○ | ○ | | | | | | |
| | Engine torque | | | ○ | | | | ○ | ○ | | | | |
| | Engine speed | | | | | | ○ | ○ | ○ | | | | |
| | A/C ON/OFF | | | | | | ○ | | | | | | |
| | Brake light switch | ○ | | ○ | | ○ | | | | | | | |
| | Vehicle speed | | | | | | | | | | | | ○ |
| | Cruise control signal | | | | ○ | | | | | | | | |
| | P/N mode switch | ○ | | | ○ | | | | | | | | |
| | "3" position switch | ○ | | | | | | | | ○ | | | |
| | Input shaft speed sensor | | | | | ○ | ○ | ○ | ○ | | | | |
| | Output shaft speed sensor | ○ | | ○ | ○ | ○ | ○ | ○ | ○ | ○ | ○ | ○ | |
| | ATF temperature sensor | ○ | | | | | ○ | ○ | | | | ○ | |
| | 4L/N switch | ○ | | ○ | ○ | ○ | | | | | | | |
| | Shift switch | ○ | | ○ | ○ | ○ | ○ | ○ | | ○ | ○ | ○ | |
| Output | Torque reduction request | | | | | | | | ○ | | | | |
| | Slip control signal *1 | | | | | | ○ | | | | | | |
| | Shift solenoid valve-A | ○ | ○ | ○ | ○ | | | | | ○ | ○ | ○ | |
| | Shift solenoid valve-B | ○ | ○ | ○ | ○ | | | | | ○ | ○ | ○ | |
| | Pressure control solenoid valve | | | | | | | ○ | | | | | |
| | TCC pressure control solenoid valve | | | | ○ | ○ | ○ | | | | | | |

I5JB0A510157-02

**NOTE**

***1: For vehicle not equipped with engine diagnosis connector model (Except RH steering vehicle not equipped with rear fog light model)**

www.cargeek.ir

 www.CarGeek.ir

## Electronic Shift Control System Wiring Diagram

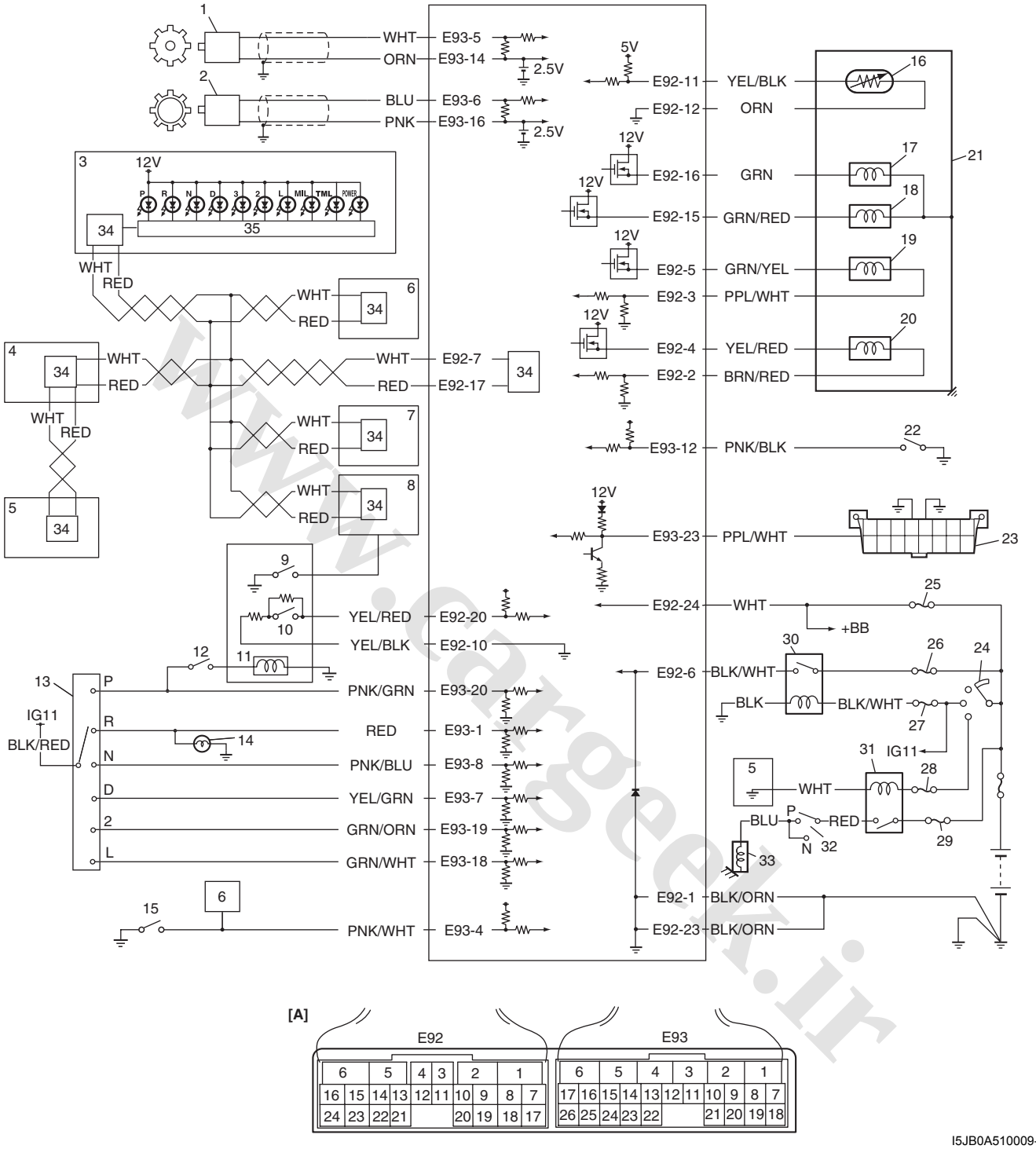


I5JB0A510009-03

| | | | |
|---|---|---|---|
| [A]: TCM connector (viewed from harness side) | 9. P/N mode switch | 18. Shift solenoid valve-B | 27. “IG COIL” fuse |
| 1. Output shaft speed sensor | 10. “3” position switch | 19. TCC pressure control solenoid valve | 28. “ST SIG” fuse |
| 2. Input shaft speed sensor | 11. Shift lock solenoid | 20. Pressure control solenoid valve | 29. “ST” fuse |
| 3. Combination meter | 12. Brake light switch | 21. Valve body assembly | 30. AT relay included in integration relay No.2 in main fuse box |
| 4. ABS hydraulic unit / control module | 13. Transmission range switch | 22. Monitor connector (if equipped) | 31. Starting motor relay |
| 5. ECM | 14. Back-up light | 23. DLC | 32. Inhibit switch |
| 6. 4WD control module | 15. 4L/N switch | 24. Ignition switch | 33. Starting motor |
| 7. Keyless start control module (if equipped) | 16. Transmission fluid temperature sensor | 25. “DOME” fuse | 34. CAN driver |
| 8. BCM | 17. Shift solenoid valve-A | 26. “AT” fuse | 35. Meter driver |

www.cargeek.ir

## Brake Interlock System Description

S5JB0A5101005

### Shift Lock Solenoid Control

This system consists of shift lock solenoid control system and interlock cable control system.
The shift lock solenoid control system is so designed that the select lever can not be shifted from “P” range position unless the ignition switch is turned ON and the brake pedal is depressed. And the interlock cable control system is so designed that the select lever cannot be shifted from “P” range position unless the ignition switch is turned to ACC or ON position. Also, the ignition key cannot be pulled out of the key slot unless the select lever is in “P” range.

## A/T Diagnosis General Description

S5JB0A5101006

This vehicle is equipped with an electronic transmission control system, which control the automatic shift up and shift down timing, TCC operation, etc. suitably to vehicle driving conditions.
TCM has an On-Board Diagnosis system which detects a malfunction in this system and abnormality of those parts that influence the engine exhaust emission.
When diagnosing a trouble in the transmission including this system, be sure to have full understanding of the outline of “On-Board Diagnostic System Description: ” and each item in “Precautions in Diagnosing Trouble: ” and execute diagnosis according to “A/T System Check: ” to obtain correct result smoothly.

**NOTE**

**There are two type of On-Board Diagnostic System, vehicle without engine diagnosis connector (1) and vehicle with engine diagnosis connector, depending on vehicle specifications. Identify the type of system for vehicle being serviced by whether the vehicle equipped with engine diagnosis connector on main harness or not.**

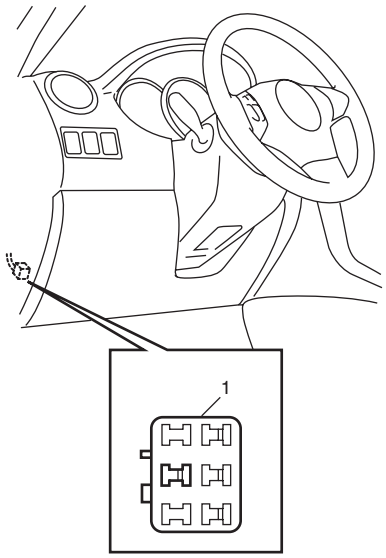


I5JB0A510010-01

## On-Board Diagnostic System Description

S5JB0A5101007

### For Vehicle without Engine Diagnosis Connector

For automatic transmission control system, TCM has the following functions. Refer to “Inspection of TCM and Its Circuits: ”.

- When the ignition switch is turned ON with the engine at a stop, malfunction indicator lamp (MIL) (1) turns ON to check the bulb of the MIL.
- When TCM detects a malfunction in A/T control system TCM desires turning on malfunction indicator lamp (MIL) and stores malfunction DTC in TCM memory.
  (If it detects that continuously 3 driving cycles are normal after detecting a malfunction, however, it makes MIL turn OFF although DTC stored in its memory will remain.)
- It is possible to communicate through DLC (2) by using not only SUZUKI scan tool (3) but also OBD generic scan tool. (Diagnostic information can be checked and erased by using a scan tool.)

www.cargeek.ir

 www.CarGeek.ir

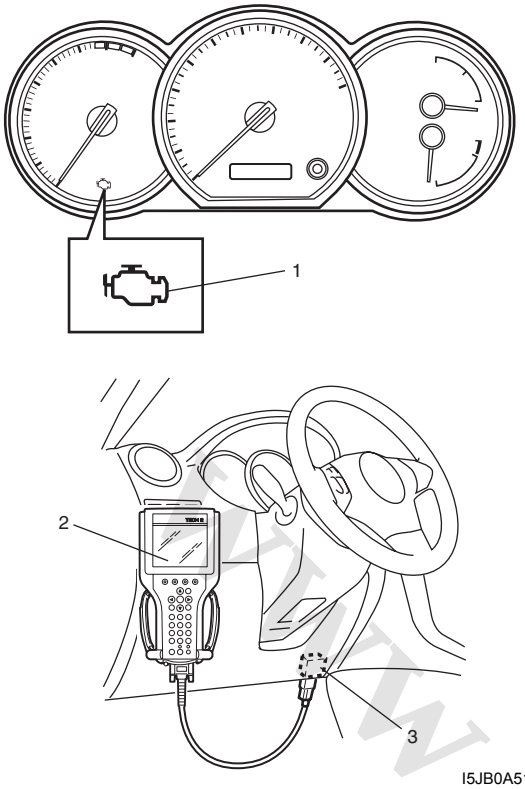


I5JB0A510011-01

**2 Driving cycle detection logic**
The malfunction detected in the first driving cycle is stored in TCM memory (in the form of pending DTC and freeze frame data) but the malfunction indicator lamp does not light at this time. It lights up at the second detection of same malfunction also in the next driving cycle.

**Pending DTC**
Pending DTC means a DTC detected and stored temporarily at 1 driving cycle of the DTC which is detected in the 2 driving cycle detection logic.

**Freeze frame data**
TCM stores the engine and driving conditions at the moment of the detection of a malfunction in its memory. This data is called “Freeze frame data”.
Therefore, it is possible to know engine and driving conditions (e.g., whether the engine was warm or not, where the vehicle was running or stopped) when a malfunction was detected by checking the freeze frame data.

**For Vehicle with Engine Diagnosis Connector**
For automatic transmission control system, TCM has the following functions. Refer to “Inspection of TCM and Its Circuits: ”.

- When ignition switch is turned ON with no malfunction in A/T control system is detected, transmission warning light (1) lights for about 2 seconds after ignition switch is turned ON and then goes OFF for bulb check.
- When TCM detects a malfunction in A/T control system, it indicates transmission warning light (1) and stores malfunction DTC in its memory.
- It is possible to communicate with TCM through data link connector (DLC) (3) by using SUZUKI scan tool (2). Diagnostic information can be checked and erased by using SUZUKI scan tool.
- It is also possible to output DTC stored in TCM by displaying DTC on digital display odometer (6) with diagnosis switch terminal (5) of monitor connector (4) grounded. If no DTC is stored in TCM memory, DTC 0000 is outputted repeatedly. If one or more DTCs are stored in TCM memory, they are outputted starting from smallest code number in increasing order. After all DTCs are outputted, they are outputted again in the same manner.

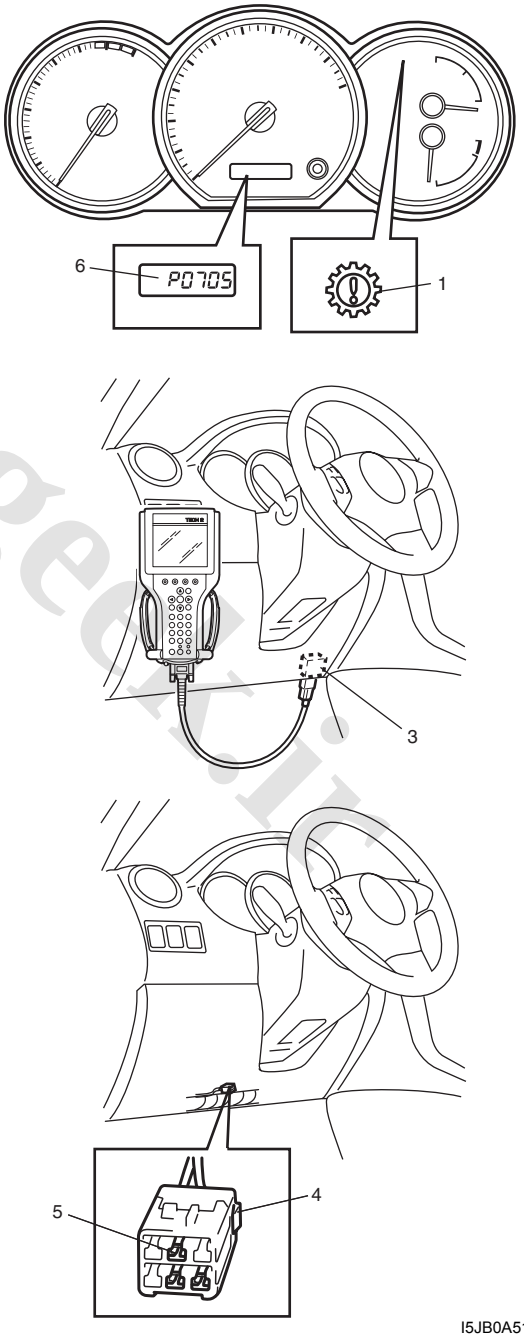


I5JB0A510012-01

www.cargeek.ir

**2 Driving cycle detection logic**
The malfunction detected in the first driving cycle is stored in TCM memory (in the form of pending DTC and freeze frame data) but the malfunction indicator lamp does not light at this time. It lights up at the second detection of same malfunction also in the next driving cycle.

**Pending DTC**
Pending DTC means a DTC detected and stored temporarily at 1 driving cycle of the DTC which is detected in the 2 driving cycle detection logic.

# Schematic and Routing Diagram

## Automatic Gear Shift Table

S5JB0A5102001

Automatic gear shift schedule is shown in the following table. Test-drive the vehicle on a flat road in the D position.

**Normal Mode**

**1. Shift Point in D position and normal mode**

| | Throttle opening (%) | Shift | Vehicle speed km/h (mph) | Remark |
|---|---|---|---|---|
| **UP shift** | Over 80% | 1st → 2nd | 50 – 55 (31 – 34) | |
| | | 2nd → 3rd | 99 – 104 (62 – 65) | |
| | | 3rd → 4th | 154 – 159 (96 – 99) | |
| | 50% | 1st → 2nd | 26 – 31 (16 – 19) | |
| | | 2nd → 3rd | 56 – 61 (35 – 38) | |
| | | 3rd → 4th | 91 – 96 (57 – 59) | 98-103 (61-64) (with cruise set condition) |
| | 10% | 1st → 2nd | 10 – 15 (6 – 9) | |
| | | 2nd → 3rd | 25 – 30 (16 – 19) | |
| | | 3rd → 4th | 41 – 46 (25 – 29) | |
| **DOWN shift** | Over 80% | 4th → 3rd | 148 – 153 (92 – 95) | |
| | | 3rd → 2nd | 84 – 89 (52 – 55) | |
| | | 2nd → 1st | 41 – 46 (25 – 29) | |
| | 50% | 4th →3rd | 68 – 73 (42 – 45) | 75 – 80 (47 – 50) (with cruise set condition) |
| | | 3rd 2nd | 42 – 47 (26 – 29) | |
| | | 2nd → 1st | 23 – 28 (14 – 17) | 14 – 19 (9 – 12) (with cruise set condition) |
| | 0% | 4th → 3rd | 22 – 27 (14 – 17) | With applying brake pedal (cost down condition) |
| | | 3rd → 2nd | 18 – 23 (11 – 14) | |
| | | 2nd → 1st | 16 – 21 (10 – 13) | |

**2. Lock-up point in D position and normal mode**

| | Lock-up clutch status | Throttle opening (%) | Vehicle speed km/h (mph) | Remark |
|---|---|---|---|---|
| **3rd gear lock-up** | ON | 50% | 85 – 90 (53 – 56) | |
| | | 20 – 30% | 56 – 61 (35 – 38) | |
| | OFF | 50% | 76 – 81 (47 – 50) | |
| | | 30 – 40% | 43 – 48 (27 – 30) | |
| **4th gear lock-up** | ON | 50% | 146 – 151 (91 – 94) | 146 – 151 (91 – 94) (with cruise set condition) |
| | | 20 – 30% | 64 – 69 (40 – 43) | |
| | OFF | 50% | 102 – 107 (63 – 66) | 85 – 90 (53 – 56) (with cruise set condition) |
| | | 20 – 30% | 55 – 60 (34 – 37) | |

www.cargeek.ir

 www.CarGeek.ir

**3. Slip lock-up point in D and/or 3 position *1**

| | Slip lock-up clutch status | Throttle opening (%) | Vehicle speed km/h (mph) | Remark |
|---|---|---|---|---|
| **3rd gear** | Slip ON | 10 – 15% | 29 – 34 (18 – 21) | Without lock-up condition |
| | Slip OFF | 10 – 15% | 25 – 30 (16 – 19) | |
| **4th gear** | Slip ON | 10 – 15% | 39 – 44 (24 – 27) | Without lock-up condition |
| | Slip OFF | 10 – 15% | 35 – 40 (22 – 25) | |

**Power Mode**

**1. Shift Point in D position and power mode**

| | Throttle opening (%) | Shift | Vehicle speed km/h (mph) | Remark |
|---|---|---|---|---|
| **UP shift** | Over 80% | 1st → 2nd | 50 – 55 (31 – 34) | |
| | | 2nd → 3rd | 99 – 104 (62 – 65) | |
| | | 3rd → 4th | 154 – 159 (96 – 99) | |
| | 50% | 1st → 2nd | 35 – 40 (22 – 25) | |
| | | 2nd → 3rd | 66 – 71 (41 – 44) | |
| | | 3rd → 4th | 106 – 111 (66 – 69) | |
| | 10% | 1st → 2nd | 10 – 15 (6 – 9) | |
| | | 2nd → 3rd | 25 – 30 (16 – 19) | |
| | | 3rd → 4th | 41 – 46 (25 – 29) | |
| **DOWN shift** | Over 80% | 4th → 3rd | 148 – 153 (92 – 95) | |
| | | 3rd → 2nd | 84 – 89 (52 – 55) | |
| | | 2nd → 1st | 45 – 50 (28 – 31) | |
| | 50% | 4th → 3rd | 82 – 87 (51 – 54) | |
| | | 3rd → 2nd | 53 – 58 (33 – 36) | |
| | | 2nd → 1st | 24 – 29 (15 – 18) | |
| | 0% | 4th → 3rd | 35 – 40 (14 – 17) | With applying brake pedal (cost down condition) |
| | | 3rd → 2nd | 18 – 23 (11 – 14) | |
| | | 2nd → 1st | 16 – 21 (10 – 13) | |

www.cargeek.ir

www.cargeek.ir

**2. Lock-up point in D position and power mode**

| | Lock-up clutch status | Throttle opening (%) | Vehicle speed km/h (mph) | Remark |
|---|---|---|---|---|
| 3rd gear lock-up | ON | 50% | 106 – 111 (66 – 69) | |
| | | 20 – 30% | 56 – 61 (35 – 38) | |
| | OFF | 50% | 76 – 81 (47 – 50) | |
| | | 30 – 40% | 43 – 48 (27 – 30) | |
| 4th gear lock-up | ON | 50% | 156 – 161 (91 – 94) | |
| | | 20 – 30% | 64 – 69 (40 – 43) | |
| | OFF | 50% | 126 – 131 (78 – 81) | |
| | | 20 – 30% | 55 – 60 (34 – 37) | |

**3. Slip lock-up point in D and/or 3 position *1**

| | Slip lock-up clutch status | Throttle opening (%) | Vehicle speed km/h (mph) | Remark |
|---|---|---|---|---|
| 3rd gear | Slip ON | 10 – 15% | 29 – 34 (18 – 21) | Without lock-up condition |
| | Slip OFF | 10 – 15% | 25 – 30 (16 – 19) | |
| 4th gear | Slip ON | 10 – 15% | 39 – 44 (24 – 27) | Without lock-up condition |
| | Slip OFF | 10 – 15% | 35 – 40 (22 – 25) | |

**NOTE**

***1: For vehicle not equipped with engine diagnosis connector model (Except RH steering vehicle not equipped with rear fog light model)**
**The gear change is done at the shift point different from the above while any of the following control functions is working. Bear this in mind when performing inspection.**

- **Slope Shift Control**
  **When the AT controller makes up-slope judgment, Slope Shift Control (on up-slope) is executed by changing the gear change point to the high-speed side so as to reduce frequent up-shift and down-shift operations. When the AT controller makes down-shift judgment, Slope Shift Control (on down-slope) is executed by changing the gear change point to the low-speed side so as to use engine-brake function effectively while driving on a down-slope.**
- **Cruise Shift Control**
  **Cruise Shift Control is executed by selecting appropriate gear according to requirement for retaining a constant vehicle speed or acceleration so as to reduce frequent up-shift and down-shift operations while cruising.**

www.CarGeek.ir

 www.CarGeek.ir

## Bearing and Race Installation Diagram

S5JB0A5102002

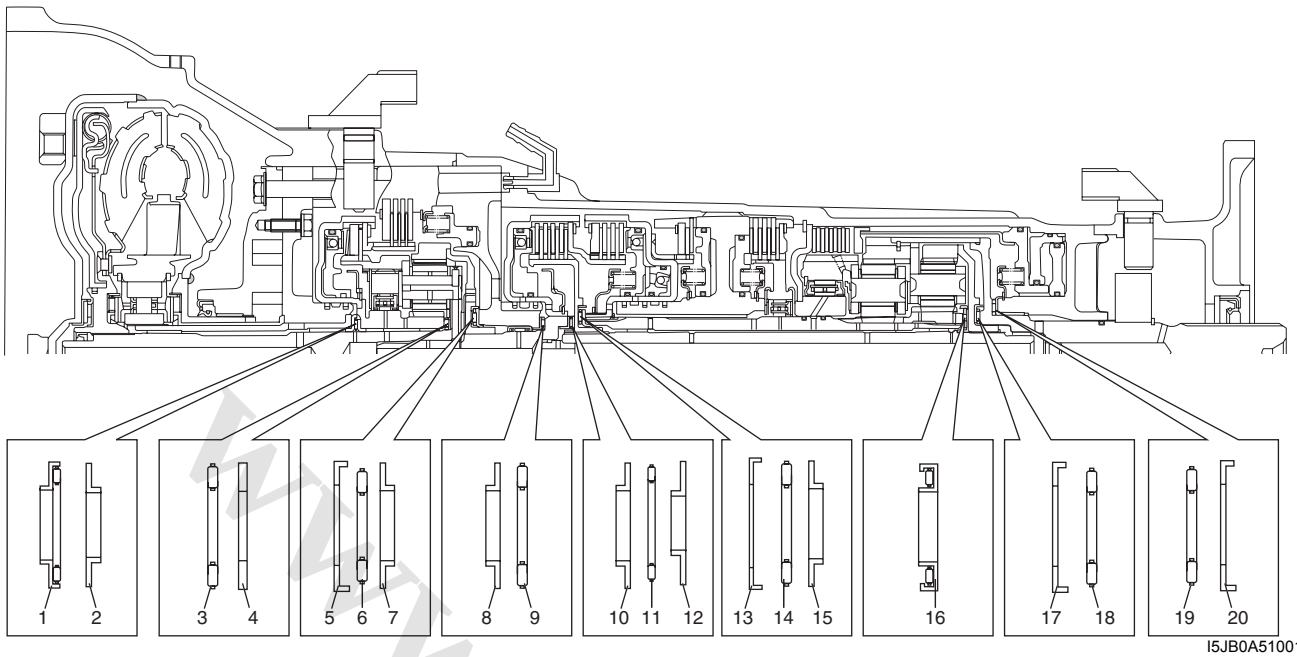


I5JB0A510013-01

### Bearing and Race Dimension

| No. | Bearing and race | Inside diameter | Outside diameter |
|---|---|---|---|
| 1 | Baring assy, O/D FR | 24.32 mm (0.957 in.) | 43.20 mm (1.701 in.) |
| 2 | Race, thrust O/D FR | 24.32 mm (0.957 in.) | 39.20 mm (1.543 in.) |
| 3 | Bearing, assy, thrust O/D case | 24.85 mm (0.978 in.) | 37.59 mm (1.480 in.) |
| 4 | Race, thrust bearing planetary O/D case | 25.03 mm (0.985 in.) | 37.35 mm (1.470 in.) |
| 5 | Race, thrust planetary No.1 | 30.00 mm (1.181 in.) | 48.54 mm (1.911 in.) |
| 6 | Bearing, thrust planetary | 28.37 mm (1.117 in.) | 46.36 mm (1.825 in.) |
| 7 | Race, thrust bearing planetary No.2 | 27.58 mm (1.086 in.) | 44.70 mm (1.760 in.) |
| 8 | Race, thrust bearing No.1 | 24.05 mm (0.947 in.) | 37.59 mm (1.480 in.) |
| 9 | Bearing, thrust forward clutch | 23.41 mm (0.922 in.) | 37.47 mm (1.475 in.) |
| 10 | Race, thrust bearing No.1 | 24.05 mm (0.947 in.) | 37.59 mm (1.480 in.) |
| 11 | Bearing, thrust forward clutch | 23.41 mm (0.922 in.) | 37.47 mm (1.475 in.) |
| 12 | Race, thrust bearing No.2 | 23.29 mm (0.917 in.) | 37.59 mm (1.480 in.) |
| 13 | Race, thrust bearing FR sun gear | 30.00 mm (1.181 in.) | 47.90 mm (1.886 in.) |
| 14 | Bearing, thrust FR sun gear | 28.37 mm (1.117 in.) | 46.36 mm (1.825 in.) |
| 15 | Race, thrust bearing FR sun gear | 27.58 mm (1.086 in.) | 44.70 mm (1.760 in.) |
| 16 | Race, thrust bearing | 21.41 mm (0.843 in.) | 47.50 mm (1.870 in.) |
| 17 | Race, thrust bearing RR planetary ring | 30.00 mm (1.181 in.) | 48.54 mm (1.911 in.) |
| 18 | Bearing, thrust RR planetary ring | 28.37 mm (1.117 in.) | 46.36 mm (1.825 in.) |
| 19 | Bearing, thrust output shaft | 38.10 mm (1.500 in.) | 55.55 mm (2.187 in.) |
| 20 | Race, thrust bearing output shaft | 39.12 mm (1.540 in.) | 57.53 mm (2.264 in.) |

www.cargeek.ir

# Component Location

## Electronic Shift Control System Components Location

S5JB0A5103001

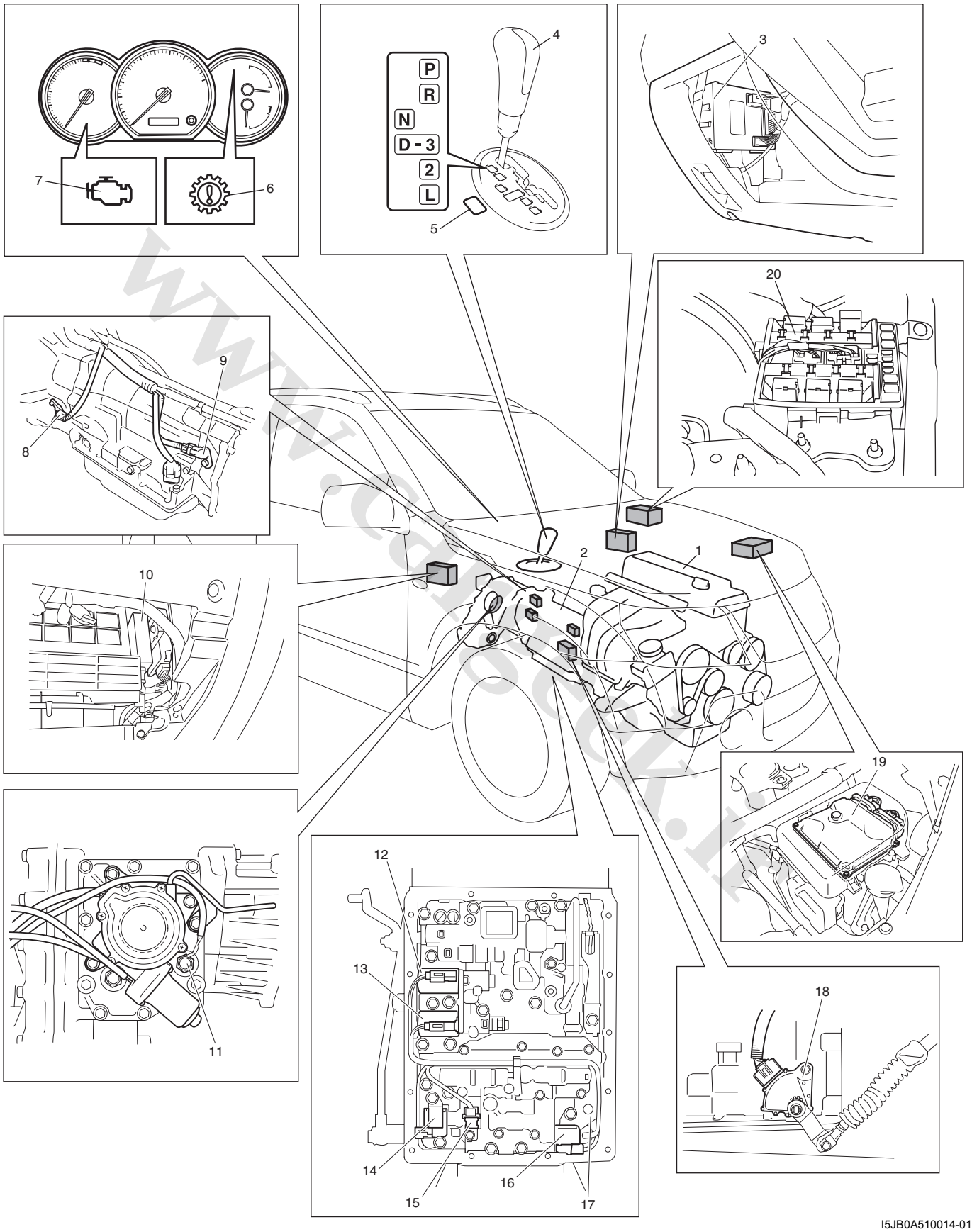


I5JB0A510014-01

www.cargeek.ir

 www.CarGeek.ir

| | | | |
|---|---|---|---|
| 1. Engine | 6. Transmission warning light (vehicle is equipped with engine diagnosis connector) | 11. 4L/N low switch | 16. Shift solenoid valve-B |
| 2. Transmission | 7. MIL (vehicle is not equipped with engine diagnosis connector) | 12. Pressure control solenoid valve | 17. Valve body assembly |
| 3. BCM | 8. Input shaft speed sensor | 13. TCC pressure control solenoid valve | 18. Transmission range sensor |
| 4. Selector lever assembly including “3” position switch | 9. Output shaft speed sensor | 14. Shift solenoid valve-A | 19. ECM |
| 5. P/N mode switch | 10. TCM | 15. Transmission fluid temperature sensor | 20. AT relay included power integration No.2 in main fuse box |

# Diagnostic Information and Procedures

## A/T System Check

S5JB0A5104001

Refer to the following items for the details of each step.

| Step | Action | Yes | No |
|---|---|---|---|
| 1 | ☞ **Customer complaint analysis**<br>1) Perform customer complaint analysis.<br>*Was customer complaint analysis performed according to instruction?* | Go to Step 2. | Perform customer complaint analysis. |
| 2 | ☞ **DTC / Freeze frame data check, record and clearance**<br>1) Check for DTC (including pending DTC).<br>*Is there any DTC(s)?* | Print DTC and freeze frame data or write them down and clear them by referring to “DTC Clearance: ”.<br>Go to Step 3. | Go to Step 4. |
| 3 | ☞ **Visual inspection**<br>1) Perform visual inspection.<br>*Is there any faulty condition?* | Repair or replace malfunction part.<br>Go to Step 11. | Go to Step 5. |
| 4 | ☞ **Visual inspection**<br>1) Perform visual inspection.<br>*Is there any faulty condition?* | Repair or replace malfunction part.<br>Go to Step 11. | Go to Step 8. |
| 5 | ☞ **Trouble symptom confirmation**<br>1) Confirm trouble symptom.<br>*Is trouble symptom identified?* | Go to Step 6. | Go to Step 7. |
| 6 | ☞ **Rechecking and record of DTC / Freeze frame data**<br>1) Recheck for DTC and freeze frame data referring to “DTC Check: ”.<br>*Is there any DTC(s)?* | Go to Step 9. | Go to Step 8. |
| 7 | ☞ **Rechecking and record of DTC / Freeze frame data**<br>1) Recheck for DTC and freeze frame data referring to “DTC Check: ”.<br>*Is there any DTC(s)?* | Go to Step 9. | Go to Step 10. |
| 8 | ☞ **A/T Basic Check and A/T Trouble Diagnosis**<br>1) Check and repair according to “A/T Basic Check: ” and “A/T Symptom Diagnosis: ”.<br>*Are check and repair complete?* | Go to Step 11. | Check and repair malfunction part(s).<br>Go to Step 11. |
| 9 | ☞ **Troubleshooting for DTC**<br>1) Check and repair according to applicable DTC diag. flow.<br>*Are check and repair complete?* | Go to Step 11. | Check and repair malfunction part(s).<br>Go to Step 11. |

www.cargeek.ir

| Step | Action | Yes | No |
|---|---|---|---|
| 10 | ☞ **Check for intermittent problem**<br>1) Check for intermittent problem.<br>*Is there any faulty condition?* | Repair or replace malfunction part(s).<br>Go to Step 11. | Go to Step 11. |
| 11 | ☞ **Final confirmation test**<br>1) Clear DTC if any.<br>2) Perform final confirmation test.<br>*Is there any problem symptom, DTC or abnormal condition?* | Go to Step 6. | End. |

**Step 1. Customer Complaint Analysis**

Record details of the problem (failure, complaint) and how it occurred as described by the customer.
For this purpose, use of such a inspection form will facilitate collecting information to the point required for proper analysis and diagnosis.

**Customer problem inspection form (example)**

| | | | |
|---|---|---|---|
| User name: | Model: | VIN: | |
| Date of issue: | Date of Reg: | Date of problem: | Mileage: |
| PROBLEM SYMPTOMS | | | |
| ☐Engine does not start<br>☐Vehicle does not move (forward, rearward)<br>☐No lock-up (TCC clutch operation)<br>☐Shift point too high or too low<br>☐Excessive gear change shock | | ☐Engine stops<br>☐Transmission does not shift (1st, 2nd, 3rd, 4th, Rev) gear<br>☐Automatic shift does not occur<br>☐Transmission slipping in (1st, 2nd, 3rd, 4th, Rev) gear<br>☐Other: | |
| VEHICLE/ ENVIRONMENTAL CONDITION WHEN PROBLEM OCCURS | | | |
| Environmental Condition | | | |
| Weather<br>Temperature<br>Frequency<br>Road | ☐Fair/☐Cloudy/☐Rain/☐Snow/☐Always/☐Other ( )<br>☐Hot/☐Warm/☐Cool/☐Cold/☐( °C °F)/☐Always<br>☐Always/☐Sometimes/☐( times/ day, month)/☐Only Once<br>☐Urban/☐Suburb/☐Highway/☐Mountainous (uphill/downhill)/☐Paved road/☐Gravel/<br>☐Other( ) | | |
| Vehicle Condition | | | |
| Transmission range<br>Transmission temp.<br>Vehicle<br><br>Engine<br>Brake<br>O/D OFF switch<br>P/N change switch | ☐(P,R,N,D,3, 2, L) range/☐( → ) range<br>☐Cold/☐Warming up phase/☐Warmed up<br>☐At stop/☐During driving (constant speed/accelerating/decelerating/ right hand corner/left hand corner)/☐Other ( )/☐Speed ( km/h mile/h)<br>☐Speed( r/min)/☐Throttle opening(idle/about %/full)<br>☐Apply/☐Not apply<br>☐ON/☐OFF<br>☐Power/☐Normal | | |
| Malfunction indicator lamp(“SERVICE ENGINE SOON” light) condition<br>☐Always ON ☐Sometimes ON ☐Always OFF ☐Good condition | | | |
| Diagnostic trouble code | First check : ☐No code | ☐Malfunction code( ) | |
| | Second check : ☐No code | ☐Malfunction code( ) | |

I5JB0A510015-01

www.cargeek.ir

 www.CarGeek.ir

**NOTE**

**The form is a standard sample. It should be modified according to conditions characteristic of each market.**

**Step 2. DTC / Freeze Frame Data Check, Record and Clearance**
First, referring to “DTC Check: ”, check DTC (including pending DTC). If DTC exists, print or write down DTC and freeze frame data and then clear them by referring to “DTC Clearance: ”. DTC indicates malfunction in the system but it is not possible to know from it whether the malfunction is occurring now or it occurred in the past and normal condition has been restored. In order to know that, check symptom in question according to Step 5 and then recheck DTC according to Step 6.
Diagnosing a trouble based on the DTC in this step only or failure to clear the DTC in this step may result in an faulty diagnosis, trouble diagnosis of a normal circuit or difficulty in troubleshooting which is otherwise unnecessary.

**Step 3 and Step 4. Visual Inspection**
As a preliminary step, be sure to perform visual check of the items that support proper function of the A/T and engine referring to “Visual Inspection: ”.

**Step 5. Trouble Symptom Confirmation**
Check trouble symptoms based on information obtained in Step 1 ☞ “Customer Complaint Analysis” and Step 2 ☞ “DTC/Freeze Frame Data Check, Record and Clearance”.
Also, recheck DTC according to “DTC Confirmation Procedure” described in each DTC flow.

**Step 6 and Step 7. Recheck and Record of DTC / Freeze Frame Data**
Refer to “DTC Check: ” for checking procedure.

**Step 8. A/T Basic Check and A/T Trouble Diagnosis**
Perform A/T basic check according to “A/T Basic Check: ” first. When the end of the flow has been reached, check the parts of the system suspected as a possible cause referring to “A/T Symptom Diagnosis: ” and based on symptoms appearing on the vehicle (symptoms obtained through steps of customer complaint analysis, trouble symptom confirmation and/or A/T basic check) and repair or replace faulty parts, if any.

**Step 9. Troubleshooting for DTC**
Based on the DTC indicated in Step 6 and 7 and referring to applicable DTC flow, locate the cause of the trouble, namely in a sensor, switch, wire harness, connector, actuator, TCM or other part and repair or replace faulty parts.

**Step 10. Check for Intermittent Problem**
Check parts where an intermittent trouble is easy to occur (e.g., wire harness, connector, etc.), referring to “Intermittent and Poor Connection Inspection: in Section 00” and related circuit of DTC recorded in Step 2.

**Step 11. Final Confirmation Test**
Confirm that the problem symptom has gone and the A/T is free from any abnormal conditions.
If what has been repaired is related to the malfunction DTC, clear the DTC once, set conditions under which DTC was detected and A/T and/or vehicle was repaired and confirm that no DTC is indicated.

## Malfunction Indicator Lamp (MIL) Check

S5JB0A5104002

Refer to “Malfunction Indicator Lamp (MIL) Check: in Section 1A”.

## Transmission Warning Light Operation Check (Vehicle is Equipped with Engine Diagnosis Connector)

S5JB0A5104003

1) Turn ignition switch ON.
2) Check that transmission warning light lights for about 2 – 4 sec. and then goes OFF. If anything faulty is found, advance “Transmission Warning Light Circuit Check – Light Does Not Come “ON” at Ignition Switch ON (Vehicle is equipped with engine diagnosis connector): ” or “Transmission Warning Light Circuit Check – Light Remains “ON” at Ignition Switch ON (Vehicle is equipped with engine diagnosis connector): ”.

## “POWER” Lamp Operation Check

S5JB0A5104004

1) Turn ignition switch ON.
2) Check that “POWER” lamp lights for about 2 – 4 sec. and then goes OFF.
   If anything faulty is found, advance to ““POWER” Light Circuit Check – Light Does Not Come “ON” at Ignition Switch ON: ”.

www.cargeek.ir

## DTC Table

S5JB0A5104005

**NOTE**

**Confirmation available table of automatic transmission related DTC is shown below.**

| | Vehicle is not equipped with engine diagnosis connector | Vehicle is equipped with engine diagnosis connector |
|---|---|---|
| SUZUKI scan tool | ○ | ○ |
| Generic scan tool | ○ | X |
| Not using scan tool (if equipped with A/T monitor connector) | X | ○ |

○: Available-DTC can be confirmed
X: Not available-DTC can not be confirmed

**NOTE**

**A: Driving cycles when MIL lighting and storing DTC in TCM memory for vehicle is not equipped with engine diagnosis connector.**
**B: Driving cycles when transmission warning light lighting and storing DTC in TCM memory for vehicle is equipped with engine diagnosis connector.**

| DTC No. | Detecting item | Detecting condition (DTC will set when detecting) | A | B |
|---|---|---|---|---|
| 0000 | No malfunction is detected | — | — | — |
| ☞P0705 | Transmission Range Sensor Circuit Malfunction (PRNDL Input) | Multiple signals are inputted simultaneously. | 1driving cycle | 1driving cycle |
| ☞P0707 | Transmission Range Sensor Circuit Low | No sensor signal is inputted. | 2 driving cycles | 2 driving cycles |
| ☞P0712 | Transmission Fluid Temperature Sensor “A” Circuit Low | Sensor output voltage is too low. | 1driving cycle | 1driving cycle |
| ☞P0713 | Transmission Fluid Temperature Sensor “A” Circuit High | Sensor output voltage is too high. | 1driving cycle | 1driving cycle |
| ☞P0717 | Input / Turbine Speed Sensor Circuit No Signal | No sensor signal is detected although output speed sensor signal is inputted. | 1driving cycle | 1driving cycle |
| ☞P0722 | Output Speed Sensor Circuit No Signal | No sensor signal is inputted although input speed sensor signal is inputted. | 1driving cycle | 1driving cycle |
| ☞P0741 | Torque Converter Clutch Circuit Performance or Stuck Off | Difference in revolution between engine and input shaft is too large although TCM is commanding TCC pressure control solenoid to turn ON. | 2 driving cycles | 2 driving cycles *2 |
| ☞P0742 | Torque Converter Clutch Circuit Stuck On | Difference in revolution between engine and input shaft is too small although TCM is commanding TCC pressure control solenoid to turn OFF. | 2 driving cycles | 2 driving cycles *2 |
| ☞P0751 | Shift Solenoid “A” Performance or Stuck Off | The gear commanded by TCM does not match the actual gear when driving. | 2 driving cycles | 2 driving cycles *2 |
| ☞P0752 | Shift Solenoid “A” Stuck On | The gear commanded by TCM does not match the actual gear when driving. | 2 driving cycles | 2 driving cycles *2 |
| ☞P0756 | Shift Solenoid “B” Performance or Stuck Off | The gear commanded by TCM does not match the actual gear when driving. | 2 driving cycles | 2 driving cycles *2 |
| ☞P0757 | Shift Solenoid “B” Stuck On | The gear commanded by TCM does not match the actual gear when driving. | 2 driving cycles | 2 driving cycles *2 |
| ☞P0962 | Pressure Control Solenoid “A” Control Circuit Low | No electric flow is detected on pressure control solenoid circuit. | 1driving cycle | 1driving cycle |
| ☞P0963 | Pressure Control Solenoid “A” Control Circuit High | Too much electric flow is detected on pressure control solenoid circuit. | 1driving cycle | 1driving cycle |
| ☞P0973 | Shift Solenoid “A” Control Circuit Low | Voltage of shift solenoid terminal is low although TCM is commanding shift solenoid to turn ON. | 1driving cycle | 1driving cycle |
| ☞P0974 | Shift Solenoid “A” Control Circuit High | Voltage of shift solenoid terminal is high although TCM is commanding shift solenoid to turn OFF. | 1driving cycle | 1driving cycle |

www.cargeek.ir

 www.CarGeek.ir

| DTC No. | Detecting item | Detecting condition (DTC will set when detecting) | A | B |
|---|---|---|---|---|
| ☞P0976 | Shift Solenoid “B” Control Circuit Low | Voltage of shift solenoid terminal is low although TCM is commanding shift solenoid to turn ON. | 1driving cycle | 1driving cycle |
| ☞P0977 | Shift Solenoid “B” Control Circuit High | Voltage of shift solenoid terminal is high although TCM is commanding shift solenoid to turn OFF. | 1driving cycle | 1driving cycle |
| ☞P1702 | Internal Control Module Memory Check Sum Error | Calculation of current data stored in TCM is not correct comparing with pre-stored checking data in TCM. | 1driving cycle | 1driving cycle |
| ☞P1703 | CAN Invalid Data- TCM | TCM receives malfunction signal of throttle position, engine coolant temperature, engine revolution and engine torque from ECM. | 1driving cycle *1 | 1driving cycle *2 |
| ☞P1723 | Range Select Switch Malfunction | 3 position switch signal is inputted out of specified value. | 1driving cycle *1 | 1driving cycle *2 |
| ☞P1774 | Control Module Communication Bus OFF | Transmitting error detected to TCM for specified time continuously. | 1driving cycle | 1driving cycle |
| ☞P1777 | TCM Lost Communication with ECM (Reception Error) | Receiving error from ECM detected to TCM for specified time continuously. | 1driving cycle | 1driving cycle |
| ☞P1778 | TCM Lost Communication with BCM (Reception Error) | Receiving error from BCM detected to TCM for specified time continuously. | 1driving cycle *1 | 1driving cycle *2 |
| ☞P1874 | 4L switch circuit malfunction (Short) | Actual transfer position is 4H although transfer low signal is inputted. | 1driving cycle | 1driving cycle *2 |
| ☞P1875 | 4L switch circuit malfunction (Open) | Actual transfer position is 4L or N although transfer low signal is not inputted. | 1driving cycle | 1driving cycle *2 |
| ☞P1878 | Torque Converter Clutch Shudder | Variation in the output revolution speed of the specified amplitude and specified cycle is detected under slip lock-up condition. | 20driving cycle *1 | — |
| ☞P2763 | Torque Converter Clutch Circuit High | Too much electric flow is detected on TCC pressure control solenoid circuit. | 1driving cycle | 1driving cycle |
| ☞P2764 | Torque Converter Clutch Circuit Low | No electric flow is detected on TCC pressure control solenoid circuit. | 1driving cycle | 1driving cycle |

**NOTE**

***1: MIL does not light although DTC is detected and stored.**
***2: Transmission warning light does not light although DTC is detected and stored.**

## DTC Check

S5JB0A5104006

**NOTE**

**For vehicle without engine diagnosis connector, the MIL is turned on when the ECM and/or TCM detect malfunction(s). Each ECU stores diagnostic information as the diagnostic trouble code (DTC) in its memory and outputs the DTC to the scan tool. Therefore, check both of the ECUs for any DTC with the scan tool because the DTC stored in ECU and TCM is not read and displayed at a time. However, each of the ECUs needs not to be checked with the generic scan tool because the DTC stored in ECM and TCM is read and displayed at a time.**

Automatic transmission DTC can be checked using any one of the following 2 methods.

### Reading DTC Using SUZUKI Scan Tool

1) Turn ignition switch OFF.
2) Connect SUZUKI scan tool to data link connector (DLC).

**Special tool**
**(A): SUZUKI scan tool**

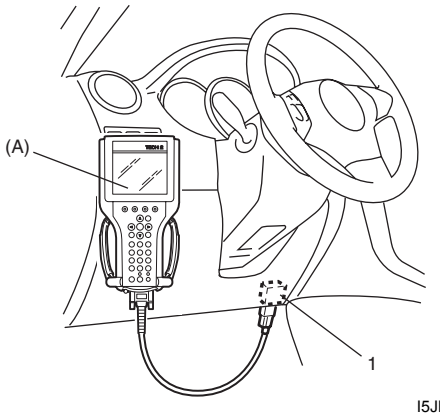


I5JB0A510016-01

www.cargeek.ir

3) Read DTC according to instructions displayed on SUZUKI scan tool and write it down. Refer to SUZUKI scan tool operator's manual for further details.
4) After completing the check, turn ignition switch OFF and disconnect SUZUKI scan tool from data link connector (DLC).

### Reading DTC Using Monitor Connector (If Equipped)

1) Turn ignition switch OFF.
2) Remove steering column hole cover (1).
3) Using service wire, connect diagnosis switch terminal (3) of monitor connector (2) to body ground.

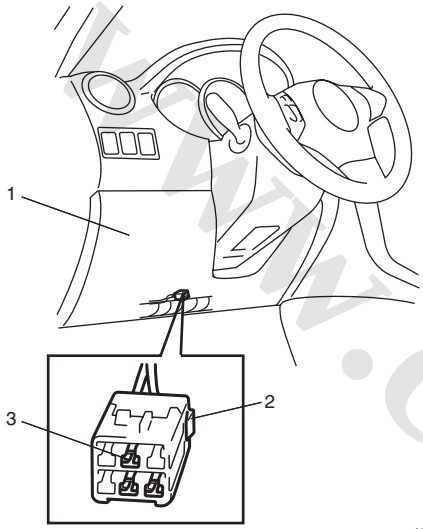


I5JB0A510017-01

4) With ignition switch ON position and leaving engine OFF, read DTC displayed on digital display odometer (1) referring to "DTC Table: ".

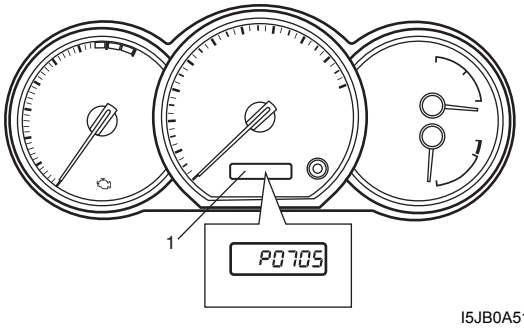


I5JB0A510018-01

5) After completing the check, turn ignition switch OFF and disconnect service wire from monitor connector.

## DTC Clearance

S5JB0A5104007

Automatic transmission DTC can be cleared using any one of the following 2 methods.

**NOTE**

**DTC and freeze frame data stored in TCM memory are also cleared in following cases. Be careful not to clear them before keeping their record.**

- **When power to TCM is cut off (by disconnecting battery cable, removing fuse or disconnecting TCM connector).**
- **When the same malfunction (DTC) is not detected again during 40 engine warm-up cycles.**

### DTC Clearance Using SUZUKI Scan Tool

1) Turn ignition switch OFF.
2) Connect SUZUKI scan tool to data link connector (DLC) (1).

**Special tool**
**(A): SUZUKI scan tool**

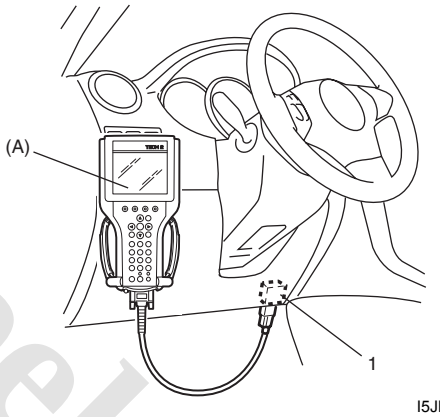


I5JB0A510016-01

3) Clear DTC according to instructions displayed on SUZUKI scan tool. Refer to SUZUKI scan tool operator's manual for further details.
4) After completing the clearance, turn ignition switch OFF and disconnected SUZUKI scan tool from data link connector (DLC).

www.cargeek.ir

 www.CarGeek.ir

**DTC Clearance Using Monitor Connector (If Equipped)**

1) Remove steering column hole cover (1).
2) Turn ignition switch ON.
3) After 6 seconds or more, repeat connecting and disconnecting diagnosis switch terminal (3) of monitor connector (2) and body ground 5 times at about 1 second interval within 10 seconds, using service wire.
4) Check TCM that no malfunction DTC remains in memory of it.

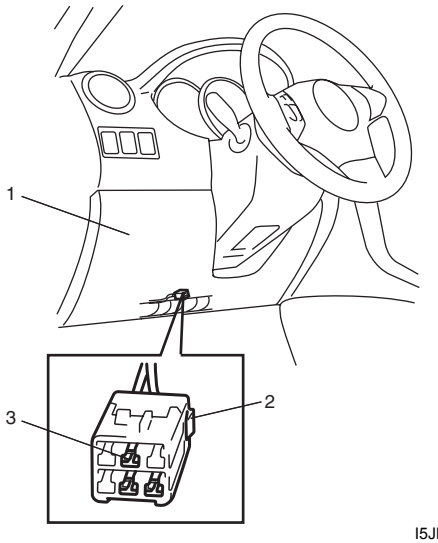


I5JB0A510017-01

## Fail Safe Table

S5JB0A5104008

This function is provided by the safe mechanism that assures safe driveability even when the solenoid valve, sensor or its circuit fails. The following table shows the fail safe function for each fail condition of sensor, solenoid, TCM or its circuit.

| DTC No. | Trouble Area | Fail Safe Operation |
|---|---|---|
| ☞P0705 | Transmission Range Sensor Circuit Malfunction (PRNDL Input) | • TCM control is performed in priority order below.<br>3> D> 2> L> R> N> P<br>• Slip controlled lock-up function is inhibited to operate.<br>• Reverse control is inhibited.<br>• Cruise control function is inhibited to operate.<br>• Power mode is inhibited. |
| ☞P0707 | Transmission Range Sensor Circuit Low | • Range is assumed to be “D” range.<br>• Slip controlled lock-up function is inhibited to operate.<br>• Reverse control is inhibited.<br>• Cruise control function is inhibited to operate.<br>• Power mode is inhibited. |
| ☞P0712 | Transmission Fluid Temperature Sensor “A” Circuit Low | • A/T fluid temperature is assumed to be 80 °C (176 °F).<br>• Lock-up function is inhibited to operate.<br>• Line pressure control at gear shifting is inhibited. |
| ☞P0713 | Transmission Fluid Temperature Sensor “A” Circuit High | |
| ☞P0717 | Input / Turbine Speed Sensor Circuit No Signal | • Torque reducing request to ECM (torque reduction control) is inhibited.<br>• Lock-up function is inhibited to operate.<br>• Line pressure control at gear shifting is inhibited. |
| ☞P0722 | Output Speed Sensor Circuit No Signal | • Vehicle speed which is calculated by input shaft speed sensor signal is used for gear shifting control instead of vehicle speed calculated by output shaft speed sensor (VSS) signal.<br>• Upshifting to 4th gear is inhibited.<br>• Lock-up function is inhibited to operate.<br>• Torque reducing request to ECM (torque reduction control) is inhibited.<br>• Line pressure control at gear shifting is inhibited. |
| ☞P0742 | Torque Converter Clutch Circuit Stuck On | When vehicle speed is less than 10 km/h (6 mile/h), gear position is fixed in 1st gear for prevention of engine stall. |
| ☞P0752 | Shift Solenoid “A” Stuck On | Upshifting to 4th gear is inhibited. |

www.cargeek.ir

| DTC No. | Trouble Area | Fail Safe Operation |
|---|---|---|
| ☞P0962 | Pressure Control Solenoid “A” Control Circuit Low | • Power supply for all solenoid valves is cut.<br>• Gear position is fixed according to select lever position as shown in the following.<br>R: Reverse<br>D: 4th<br>3: 4th<br>2: 3rd<br>L: 1st<br>• Lock-up function is inhibited to operate.<br>• Line pressure control at gear shifting is inhibited. |
| ☞P0963 | Pressure Control Solenoid “A” Control Circuit High | |
| ☞P0973 | Shift Solenoid “A” Control Circuit Low | |
| ☞P0974 | Shift Solenoid “A” Control Circuit High | |
| ☞P0976 | Shift Solenoid “B” Control Circuit Low | |
| ☞P0977 | Shift Solenoid “B” Control Circuit High | |
| ☞P1702 | Internal Control Module Memory Check Sum Error | • Power supply for all solenoid valves is cut.<br>• Gear position is fixed according to select lever position as shown in the following.<br>R: Reverse<br>D: 4th<br>3: 4th<br>2: 3rd<br>L: 1st<br>• Lock-up function is inhibited to operate.<br>• Line pressure control at gear shifting is inhibited. |
| ☞P1703 | CAN Invalid Data- TCM | In case of throttle position signal malfunction:<br>• Throttle opening used for line pressure control is assumed to be 100%.<br>• Throttle opening used for gear shifting control is assumed to be 0%.<br>• Lock-up function is inhibited to operate.<br>• Line pressure control at gear shifting is inhibited.<br>In case of engine coolant temperature signal malfunction:<br>• Engine coolant temperature is assumed to be 80 °C (176 °F).<br>• Slip controlled lock-up function is inhibited to operate.<br>In case of engine revolution signal malfunction:<br>• Engine revolution is assumed to be maximum revolution.<br>• Lock-up function is inhibited to operate.<br>In case of engine torque signal malfunction:<br>• Slip controlled lock-up function is inhibited to operate.<br>• Engine torque is assumed to be maximum torque.<br>In case of vehicle speed signal:<br>• Cruise control function is inhibited to operate. |

www.CarGeek.ir

 www.CarGeek.ir

| DTC No. | Trouble Area | Fail Safe Operation |
|---|---|---|
| ☞P1774 | CAN communication problem-TCM | • Throttle opening used for line pressure control is assumed to be 100%.<br>• Throttle opening used for gear shifting control is assumed to be 0%.<br>• Engine revolution is assumed to be maximum revolution.<br>• Engine torque is assumed to be maximum torque.<br>• Engine coolant temperature is assumed to be 80 °C (176 °F).<br>• Lock-up function is inhibited to operate.<br>• Line pressure control at gear shifting is inhibited.<br>• Torque reducing request to ECM (torque reduction control) is inhibited.<br>• Line pressure is outputted maximum value.<br>• Power mode is inhibited. (P1774 only) |
| ☞P1777 | TCM Lost Communication with ECM (Reception Error) | |
| ☞P1778 | TCM Lost Communication with BCM (Reception Error) | Power mode is inhibited. |
| ☞P1874 | 4L switch circuit malfunction (Short) | Slip controlled lock-up function is inhibited to operate. |
| ☞P1875 | 4L switch circuit malfunction (Open) | |
| ☞P1878 | Torque Converter Clutch Shudder | Slip controlled lock-up function is inhibited to operate. |
| ☞P2763 | Torque Converter Clutch Circuit High | Power supply for TCC pressure control solenoid is cut. |
| ☞P2764 | Torque Converter Clutch Circuit Low | • Lock-up function is inhibited to operate.<br>• When vehicle speed is less than 10 km/h (6 mile/h), gear position is fixed in 1st gear for prevention of engine stall. |

## Scan Tool Data

S5JB0A5104009

As the data values given in the following table are standard values estimated on the basis of values obtained from the normally operating vehicles by using a scan tool, use them as reference value. Even when the vehicle is in good condition, there may be cases where the checked value does not fall within each specified data range. Therefore, judgment as abnormal should not be made by checking with these data alone.
Also, condition in the following table that can be checked by the scan tool are those detected by TCM and output from TCM as commands and there may be cases where the automatic transmission or actuator is not operating (in the condition) as indicated by the scan tool.

| Scan Tool Data | Vehicle Condition | | Normal Condition / Reference Values |
|---|---|---|---|
| Gear Position | Ignition switch ON POWER mode OFF | Select lever is in “P” position | P/N |
| | | Select lever is in “R” position | R |
| | | Select lever is in “N” position | P/N |
| | | Select lever is in “D” position | 1st |
| | | Select lever is in “3” position | 1st |
| | | Select lever is in “2” position | 1st |
| | | Select lever is in “L” position | 1st |
| Throttle Position | Ignition switch ON | Accelerator pedal is depressed | 0 – 100% (varies depending on depressed value) |
| | | Accelerator pedal is released | 0 – 5% |
| Input Shaft Rev | At engine idle speed and selector lever is in “P”position | | (Engine idle speed is displayed in increments of 50 rpm) |
| | At 40 km/h (25 mile/h) constant speed, 20% or less throttle opening and 3rd gear (“3” range) | | 2300 RPM (displayed in increments of 50 rpm) |
| | At 60 km/h (37.5 mile/h) constant speed, 20% or less throttle opening and 4th gear (“D” range) | | 0 RPM |
| Output Shaft Rev | At vehicle stop | | 0 RPM |
| | At 40 km/h (25 mile/h) constant speed, 20% or less throttle opening and 3rd gear (“3” range) | | 2300 RPM (displayed in increments of 50 rpm) |

www.cargeek.ir

| Scan Tool Data | Vehicle Condition | | Normal Condition / Reference Values |
|---|---|---|---|
| Vehicle Speed 1 | At vehicle stop | | 0 km/h, 0 MPH |
| Battery Voltage | Ignition switch ON and engine stop | | Battery voltage is displayed (8 – 16 V) |
| ATF Temp | After driving at 60 km/h (37.5 mile/h) for 15 minutes or more, and A/T fluid temperature around sensor reaches 70 – 80 °C (158 – 176 °F) | | 70 – 80 °C (158 – 176 °F) |
| TCC Sol Duty | At vehicle stop, closed throttle and 1st gear | | 0% |
| | At 80 km/h (50 mile/h) constant speed, 30% or less throttle opening and 3th gear. (“3” range) | | 100% |
| Press Cont Sol | At vehicle stop, closed throttle, engine idle speed and 1st gear | | 9.5% |
| Slip RPM | Engine running at idle speed and selector lever is in “P” range | | 0 ±25 RPM |
| | Engine running, vehicle stop and selector lever is in “D” range | | Engine speed is displayed |
| Vehicle Speed 2 | At vehicle stop | | 0 km/h, 0 MPH |
| Engine Speed | At engine idle speed | | Engine idle speed is displayed |
| Coolant Temp | Ignition switch ON | | Engine coolant temperature is displayed |
| Target Engine Torque | Ignition switch ON | | 0 N·m |
| Engine Torque | Ignition switch ON | | 0 N·m |
| MIL request (for E-OBD) | Ignition switch ON | | OFF |
| Malfunction Indication On (for Non E-OBD) | Ignition switch ON | | OFF |
| Fuel Cut Flag | Ignition switch ON | | OFF |
| O/D Off Switch | Ignition switch ON | Shift selector lever to “3” range | ON |
| | | Shift selector lever to other above range | OFF |
| Trans Range | Ignition switch ON | Select lever is in “P” position | P |
| | | Select lever is in “R” position | R |
| | | Select lever is in “N” position | N |
| | | Select lever is in “D” position | D |
| | | Select lever is in “3” position | D |
| | | Select lever is in “2” position | 2 |
| | | Select lever is in “L” position | L |
| Shift Sol A Con | At vehicle stop, closed throttle and 1st gear | | ON |
| | At 60 km/h (37.5 mile/h) constant speed, 20% or less throttle opening and 3rd gear | | OFF |
| Shift Sol A Mon | At vehicle stop, closed throttle and 1st gear | | ON |
| | At 60 km/h (37.5 mile/h) constant speed, 20% or less throttle opening and 3rd gear | | OFF |
| Shift Sol B Con | At vehicle stop, closed throttle and 1st gear | | OFF |
| | At 20 km/h (12.5 mile/h) constant speed, 20% or less throttle opening and 2nd gear | | ON |
| Shift Sol B Mon | At vehicle stop, closed throttle and 1st gear | | OFF |
| | At 20 km/h (12.5 mile/h) constant speed, 20% or less throttle opening and 2nd gear | | ON |
| Mode Select Switch | Ignition switch ON, P/N mode switch is at Normal position | | NORMAL |
| | Ignition switch ON, P/N mode switch is at Power position | | POWER |
| 4WD Low Switch | Ignition switch ON, transfer position switch is “4H” position | | OFF |
| | Ignition switch ON, transfer position switch is “4L” position | | ON |

www.cargeek.ir

 www.CarGeek.ir

| Scan Tool Data | Vehicle Condition | | Normal Condition / Reference Values |
|---|---|---|---|
| D Range Signal | Ignition switch ON | Select lever is in “P” position | P/N range |
| | | Select lever is in “R” position | D range |
| | | Select lever is in “N” position | P/N range |
| | | Select lever is in “D” position | D range |
| | | Select lever is in “3” position | D range |
| | | Select lever is in “2” position | D range |
| | | Select lever is in “L” position | D range |
| A/C Switch | Ignition switch ON and air conditioner switch OFF | | Cancel |
| Brake Switch | Ignition switch ON | Brake pedal is depressed | ON |
| | | Brake pedal is released | OFF |
| Accel Actual Pos | Ignition switch ON | Accelerator pedal is depressed | 0 – 100% (varies depending on depressed value) |
| | | Accelerator pedal is released | 0% |

**Scan Tool Data Definitions**

**Gear Position (1ST, 2ND, 3RD, 4TH, N, R):** This parameter is indicated actual gear position.

**Throttle Position (%):** Throttle valve opening ratio sent from ECM on CAN communication line.

**Input Shaft Rev (RMP):** Input shaft revolution computed by reference pulses coming from input shaft speed sensor on transmission case.

**Output Shaft Rev (RMP):** Output shaft revolution computed by reference pulses coming from output shaft speed sensor on transmission case.

**Vehicle Speed 1 (Km/h):** This parameter is competed by output shaft speed sensor and 4WD low switch on TCM. Gear shift schedule relate this parameter.

**Battery Voltage (V):** Battery voltage read by TCM as analog input signal by TCM.

**ATF Temp (°C):** ATF temperature detected by signal from transmission fluid temperature sensor installed in valve body.

**TCC Sol Duty (%):** Electric current value ration between electric current value being outputted from TCM to TCC pressure control solenoid and maximum value can be outputted by TCM.

**Press Cont Sol (%):** Electric current value ratio between electric current value being outputted from TCM to pressure control solenoid-A and maximum value can be outputted by TCM.

**Slip RPM (RMP):** This parameter indicates slipping rotation in the torque converter (difference between input shaft rotation and engine rotation).

**Vehicle Speed 2 (Km/h):** Actual vehicle speed detected by signal on CAN communication line fed from ECM.

**Engine Speed (RPM):** Engine speed computed by signal on CAN communication line fed from ECM.

**Coolant Temp (°C):** Engine coolant temperature detected by signal on CAN communication line fed from ECM.

**Target Engine Torque (N·m):** Target engine torque detected by signal on CAN communication line fed from ECM.

**Engine Torque (N·m):** Actual engine torque detected by signal on CAN communication line fed from ECM.

**MIL Request (ON, OFF) (for E-OBD model):** ON: Signal which TCM requires combination meter to turn ON malfunction indicator lamp.
OFF: Signal which TCM does not require combination meter to turn ON malfunction indicator lamp.

**Malfunction Indication On (ON, OFF) (for non E-OBD model):** ON: Signal which TCM requires combination meter to turn ON transmission warning lamp.
OFF: Signal which TCM does not require combination meter to turn ON transmission warning lamp.

**Fuel Cut Flag:** ON: Signal which inform that fuel cut is operating.
OFF: Signal which inform that fuel cut is not operating.

**O/D Off Switch (ON, OFF):** Inputted signal from “3” position switch in selector lever assembly.
ON: Shift selector lever to “3” range
OFF: Shift selector lever to other above range

**Trans Range (P, R, N, D, 2, L):** It indicates transmission range according to transmission range switch signal.

**Shift Sol A Con/ MON (ON, OFF):** COM-ON: ON command being outputted to shift solenoid-A.
COM-OFF: OFF command not being outputted to shift solenoid-A.
MON-ON: Electricity being passed to shift solenoid-A.
MON-OFF: Electricity not being passed to shift solenoid-A.

**Shift Sol B Con / MON (ON, OFF):** COM-ON: ON command being outputted to shift solenoid-B.
COM-OFF: OFF command not being outputted to shift solenoid-B.
MON-ON: Electricity being passed to shift solenoid-B.
MON-OFF: Electricity not being passed to shift solenoid-B.

**Mode Select Switch (NORMAL, POWER):** Inputted signal from P/N mode switch on center console.
NORMAL: P/N mode switch is at OFF position.
POWER: P/N mode switch is at ON position.

www.cargeek.ir

**4WD Low Switch (ON, OFF):** Inputted signal from 4L/N switch on transfer case.
ON: Transfer gear position is 4L
OFF: Transfer gear position is 4H

**D RANGE SIGNAL (P/N range, D range):** ON: Signal which TCM require ECM to increase idle speed
OFF: Signal which TCM does not require ECM to increase idle speed

**A/C Switch (ON, OFF):** ON: Signal which inform that air conditioner compressor is turned ON.
OFF: Signal which inform that air conditioner compressor is turned OFF.

**Brake Switch (ON, OFF):** Brake light switch position detected by signal on CAN communication line fed from ECM.
ON: Brake pedal depressed
OFF: Brake pedal released

**Accel Actual Pos (%):** Accelerator pedal opening ratio detected by signal on CAN communication line fed from ECM.

## Visual Inspection

S5JB0A5104010

Visually check the following parts and systems.

| Inspection Item | | Referring |
|---|---|---|
| A/T fluid | Level, leakage, color | “A/T Fluid Level Check: ” |
| A/T fluid hoses | Disconnection, looseness, deterioration | “Oil Cooler Hose and Pipe Components: ” |
| A/T select cable | Installation, operation | “Select Cable Adjustment: ” |
| Engine oil | Level, leakage | “Engine Oil and Filter Change: in Section 0B” |
| Engine coolant | Level, leakage | “Engine Coolant Change: in Section 0B” |
| Battery | Fluid level, corrosion of terminal | |
| Connectors of electric wire harness | Disconnection friction | “Intermittent and Poor Connection Inspection: in Section 00” |
| Fuses | Burning | “Cautions in Body Electrical System Servicing: in Section 9A” |
| Parts | Installation, damage | |
| Bolt | Looseness | |
| Transmission warning light | Operation at engine start | “Transmission Warning Light Operation Check (Vehicle is Equipped with Engine Diagnosis Connector): ” |
| “POWER” lamp | Operation at engine start | ““POWER” Lamp Operation Check: ” |
| Malfunction indicator lamp | Operation at engine start | “Malfunction Indicator Lamp (MIL) Check: in Section 1A” |
| Charge warning lamp | Operation at engine start | “Generator Symptom Diagnosis: in Section 1J” |
| Engine oil pressure warning lamp | Operation at engine start | “Oil Pressure Switch Inspection: in Section 9C” |
| Engine coolant temp. meter | Operation at engine start | |
| Other parts that can be checked visually | | |

## A/T Basic Check

S5JB0A5104011

This check is important for troubleshooting when TCM has detected no DTC and no abnormality has been noted in visual inspection. Follow the flow table carefully.

| Step | Action | Yes | No |
|---|---|---|---|
| 1 | *Was “A/T System Check” preformed?* | Go to Step 2. | Go to “A/T System Check: ”. |
| 2 | **Perform “Road Test”**<br>*Is it OK?* | Go to Step 3. | Proceed to “Troubleshooting” in “Road Test: ”. |
| 3 | **Perform “Manual Road Test”**<br>*Is it OK?* | Go to Step 4. | Proceed to “Troubleshooting” in “Manual Road Test: ”. |
| 4 | **Perform “Engine Brake Test”**<br>*Is it OK?* | Go to Step 5. | Proceed to “Troubleshooting” in “Engine Brake Test: ”. |
| 5 | **Perform “Stall Test”**<br>*Is it OK?* | Go to Step 6. | Proceed to “Troubleshooting” in “Stall Test: ”. |

www.cargeek.ir

 www.CarGeek.ir

| Step | Action | Yes | No |
|---|---|---|---|
| 6 | **Perform "Time Lag Test"**<br><br>*Is it OK?* | Go to Step 7. | Proceed to "Troubleshooting" in "Time Lag Test: ". |
| 7 | **Perform "Line Pressure Test"**<br><br>*Is it OK?* | Go to Step 8. | Proceed to "Troubleshooting" in "Line Pressure Test: ". |
| 8 | 1) Proceed to "Trouble Diagnosis 1" in "A/T Symptom Diagnosis: ".<br><br>*Is trouble identified?* | Repair or replace faulty parts. | Go to Step 9. |
| 9 | 1) Proceed to "Trouble Diagnosis 2" in "A/T Symptom Diagnosis: ".<br><br>*Is trouble identified?* | Repair or replace faulty parts. | Proceed to "Trouble Diagnosis 3" in "A/T Symptom Diagnosis: ". |

## Road Test

S5JB0A5104012

This test is to check if upshift, downshift and lock-up take place at specified speeds while actually driving vehicle on a level road.

**⚠ WARNING**

- **Carry out test in very little traffic area to prevent an accident.**
- **Test requires 2 persons, a driver and a tester.**

1) Warm up engine.
2) With engine running at idle, shift select "D".
3) Accelerate vehicle speed by depressing accelerator pedal gradually.
4) While driving in "D" range, check if gear shift and lock-up occur properly as shown in "Automatic Gear Shift Table: ".

### Troubleshooting

| Condition | Possible cause | Correction / Reference Item |
|---|---|---|
| ***Unable to run in all range*** | Faulty oil pump | *Inspect. If NG, replace.* |
| | Seized or broken planetary gear | *Inspect. If NG, replace.* |
| | Faulty torque converter | *Inspect. If NG, replace.* |
| | Damaged drive plate | *Inspect. If NG, replace.* |
| | Faulty valve body component | *Replace valve body assembly.* |
| ***Unable to run in reverse position*** | Faulty direct clutch | *Inspect. If NG, replace.* |
| | Faulty reverse brake | *Inspect. If NG, replace.* |
| ***1 → 2 upshift fails to occur*** | Malfunction of transmission range sensor | *Inspect. If NG, replace.* |
| | Maladjust shift control cable | *Adjust.* |
| | Faulty valve body component | *Replace valve body component.* |
| | Faulty second brake | *Inspect. If NG, replace.* |
| | Faulty one-way No.1 clutch | *Inspect. If NG, replace.* |
| ***2 → 3 upshift fails to occur*** | Malfunction of transmission range sensor | *Inspect. If NG, replace.* |
| | Faulty valve body component | *Replace valve body component.* |
| | Faulty direct clutch | *Inspect. If NG, replace.* |
| ***3 → 4 upshift fails to occur*** | Malfunction of transmission range sensor | *Inspect. If NG, replace.* |
| | Faulty valve body component | *Replace valve body component.* |
| | Faulty O/D brake | *Inspect. If NG, replace.* |

www.cargeek.ir

| Condition | Possible cause | Correction / Reference Item |
|---|---|---|
| ***Incorrect gear shift point*** | Malfunction of throttle position sensor | *Inspect. If NG, replace.* |
| | Malfunction of input shaft speed sensor | *Inspect. If NG, replace.* |
| | Malfunction of output shaft speed sensor | *Inspect. If NG, replace.* |
| | Malfunction of power mode switch | *Inspect, If NG, replace.* |
| | Malfunction of transmission fluid temperature sensor | *Inspect. If NG, replace.* |
| ***TCC (lock-up) function does not operate*** | Malfunction of engine coolant temperature (ECT) sensor | *Inspect. If NG, replace.* |
| | Malfunction of brake light switch | *Inspect. If NG, replace.* |
| | Malfunction of throttle position sensor | *Inspect. If NG, replace.* |
| | Faulty valve body component | *Replace valve body component.* |
| | Faulty torque converter | *Replace torque converter.* |

## Manual Road Test

S5JB0A5104013

This test checks the gears being used in “L”, “2”, “3” or “D” range when driven with unoperated gear shift control system. Test drive vehicle on a level road.

**NOTE**

**Before this test, check diagnostic trouble code (DTC).**

1) With select lever in “P”, start engine and warm it up.
2) After warming up engine, turn ignition switch OFF and disconnect valve body connector (1).

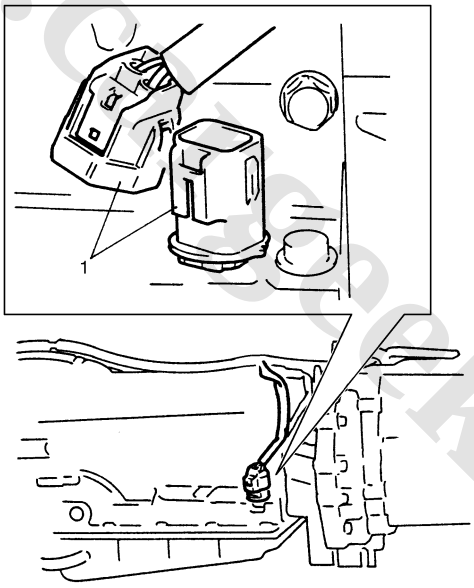


I5JA01511003-01

3) With select lever in “L” range, start vehicle. Check that 1st gear is being used referring to V1000 table shown below.
4) While vehicle is running, shift select lever to “2” range and check that 1st gear is being used.
5) While vehicle is running, shift select lever to “3” or “D” range and check that 4th gear is being used.
6) After the checks, stop vehicle then turn ignition switch OFF, and connect valve body connector.
7) Clear DTC.

**Vehicle speed per 1000 rpm in engine speed**

| Gear position | Vehicle speed |
|---|---|
| 1st | 9.2 km/h (5.7 mile/h) |
| 2nd | 17.4 km/h (10.8 mile/h) |
| 3rd | 26.0 km/h (16.2 mile/h) |
| 4th | 37.7 km/h (23.4 mile/h) |

www.cargeek.ir

 www.CarGeek.ir

**Troubleshooting**

| Condition | Possible cause | Correction / Reference Item |
|---|---|---|
| ***Selected gear is incorrect*** | Faulty valve body component | *Replace valve body assembly.* |
| | Faulty clutch or brake | *Inspect clutch and brake. If any parts are faulty, replace them.* |

## Stall Test

S5JB0A5104014

This test is to check overall performance of automatic transmission and engine by measuring stall speed at “D” and “R” ranges. Be sure to perform this test only when transmission fluid is at normal operating temperature and its level is between FULL and LOW marks.

**⚠ CAUTION**

- **Do not run engine at stall more than 5 seconds continuously, for fluid temperature may rise excessively high.**
- **After performing stall test, be sure to leave engine running at idle for longer than 1 minute before another stall test.**

1) Apply parking brake and block wheels.
2) Install tachometer.
3) Start engine with select lever shifted to “P”.
4) Depress brake pedal fully.
5) Shift select lever to “D” and depress accelerator pedal fully while watching tachometer. Read engine rpm quickly when it has become constant (stall speed).
6) Release accelerator pedal immediately after stall speed is checked.
7) In the same way, check stall speed in “R” range.
8) Stall speed should be within following specification.

**Engine stall speed**
**Standard: 2,600 – 3,000 rpm**

**Troubleshooting**

| Condition | Possible cause | Correction / Reference Item |
|---|---|---|
| ***Lower than standard level in both “D” and “R” range*** | Engine output torque failure | *Inspect and repair engine.* |
| | Faulty one-way clutch of torque converter | *Replace torque converter.* |
| ***Higher than standard level in “D” range*** | Malfunction of pressure control solenoid valve (Low line pressure) | *Inspect. If NG, replace valve body assembly.* |
| | Malfunction of primary regulator valve (Low line pressure) | *Replace valve body assembly.* |
| | Slippery O/D clutch | *Inspect. If NG, replace.* |
| | Slippery forward clutch | *Inspect. If NG, replace.* |
| | Faulty O/D one-way clutch | *Inspect. If NG, replace.* |
| | Faulty one-way clutch No.2 | *Inspect. If NG, replace.* |
| | Leakage from “D” range fluid pressure circuit | *Overhaul or replace valve body assembly.* |
| ***Higher than standard level in “R” range*** | Malfunction of pressure control solenoid valve (Low line pressure) | *Inspect. If NG, replace valve body assembly.* |
| | Malfunction of primary regulator valve (Low line pressure) | *Replace valve body assembly.* |
| | Slippery direct clutch | *Inspect. If NG, replace.* |
| | Slippery reverse brake | *Inspect. If NG, replace.* |
| | Faulty O/D one-way clutch | *Inspect. If NG, replace.* |
| | Leakage from “R” range fluid pressure circuit | *Overhaul or replace valve body assembly.* |

www.cargeek.ir

| Condition | Possible cause | Correction / Reference Item |
|---|---|---|
| ***Higher than standard level in both "D" and "R" range*** | Malfunction of pressure control solenoid valve (Low line pressure) | *Inspect. If NG, replace valve body assembly.* |
| | Malfunction of primary regulator valve (Low line pressure) | *Replace valve body assembly.* |
| | Clogged oil strainer | *Replace.* |
| | Faulty oil pump | *Inspect. If NG, replace.* |
| | Leakage from both "D" and "R" range fluid pressure circuit | *Overhaul or replace valve body assembly.* |

## Time Lag Test

S5JB0A5104015

This test is to check conditions of clutch, reverse brake and fluid pressure. "Time lag" means time elapsed since select lever is shifted with engine idling till shock is felt.

1) With chocks placed before and behind front and rear wheels respectively, depress brake pedal.
2) Start engine.
3) With stop watch ready, shift select lever from "N" to "D" range and measure time from that moment till shock is felt.
4) Similarly measure time lag by shifting select lever from "N" to "R" range.

**Gear shifting time lag**
**"N" → "D": Less than 1.0 sec.**
**"N" → "R": Less than 1.4 sec.**

**NOTE**

- **When repeating this test, be sure to wait at least one minute after select lever is shifted back to "N" range.**
- **Engine should be warmed up fully for this test.**
- **Repeat test 3 times and take average of those data for final time lag data.**

### Troubleshooting

| Condition | Possible cause | Correction / Reference Item |
|---|---|---|
| ***N → "D" time lag exceeds specification*** | Malfunction of pressure control solenoid valve (Low line pressure) | *Inspect. If NG, replace valve body assembly.* |
| | Malfunction of primary regulator valve (Low line pressure) | *Replace valve body assembly.* |
| | Clogged oil strainer | *Replace.* |
| | Faulty oil pump | *Inspect. If NG, replace.* |
| | Faulty forward clutch | *Inspect. If NG, replace.* |
| | Leakage from "D" range fluid pressure circuit | *Overhaul or replace valve body assembly.* |
| ***N → "R" time lag exceeds specification*** | Malfunction of pressure control solenoid valve (Low line pressure) | *Inspect. If NG, replace valve body assembly.* |
| | Malfunction of primary regulator valve (Low line pressure) | *Replace valve body assembly.* |
| | Clogged oil strainer | *Replace.* |
| | Faulty oil pump | *Inspect. If NG, replace.* |
| | Faulty direct clutch | *Inspect. If NG, replace.* |
| | Faulty reverse brake | *Inspect. If NG, replace.* |
| | Leakage from "R" range fluid pressure circuit | *Overhaul or replace valve body assembly.* |

## Line Pressure Test

S5JB0A5104016

Purpose of this test is to check operating conditions of each part by measuring fluid pressure in fluid pressure line. Line pressure test requires following conditions.

- Automatic fluid is at normal operating temperature (70 – 80 °C / 158 – 176 °F).
- Fluid is filled to proper level (between FULL and LOW on dipstick).
- Air conditioner switch is turned OFF.

www.cargeek.ir

 www.CarGeek.ir

1) Apply parking brake securely and place chocks against wheels.
2) Remove fluid pressure check hole plug bolt.
3) Attach oil pressure gauge to fluid pressure check hole in transmission case.

**Special tool**
**(A): 09925–37811–001**

**⚠ CAUTION**

**After attaching oil pressure gauge, check that no fluid leakage exists.**

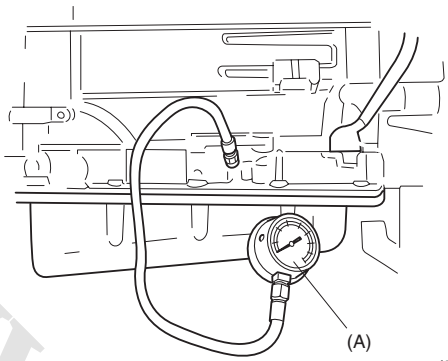

I5JB0A510019-01

4) Depress foot brake fully, run engine at idle and stall then check fluid pressure in “D” or “R” range.

**⚠ CAUTION**

- **Do not continue running engine at stall speed longer than 5 seconds.**
- **After performing line pressure test, be sure to leave engine running at idle for longer than one minute before performing another line pressure test.**

**Automatic transmission line pressure**

| | “D” range | “R” range |
|---|---|---|
| **At idle speed** | **304 – 362 kPa (3.1 – 3.7 kg/cm², 44 – 53 psi)** | **440 – 538 kPa (4.5 – 5.5 kg/cm², 64 – 78 psi)** |
| **At stall speed** | **1161 – 1321 kPa (11.8 – 13.5 kg/cm², 168 – 192 psi)** | **1485 – 1790 kPa (15.2 – 18.3 kg/cm², 216 – 260 psi)** |

5) If check result is OK,disconnect special tool, then tighten fluid pressure check hole bolt to specified torque.

**Tightening torque**
**Fluid pressure check hole bolt: 8 N·m (0.8 kgf-m, 6.0 lb-ft)**

**Troubleshooting**

| Condition | Possible cause | Correction / Reference Item |
|---|---|---|
| ***Higher than standard level in each range*** | Malfunction of pressure control solenoid valve (High line pressure) | *Inspect. If NG, replace valve body assembly.* |
| | Malfunction of primary regulator valve (High line pressure) | *Replace valve body assembly.* |
| ***Lower than standard level in each range*** | Malfunction of pressure control solenoid valve (Low line pressure) | *Inspect. If NG, replace valve body assembly.* |
| | Malfunction of primary regulator valve (Low line pressure) | *Replace valve body assembly.* |
| | Clogged oil strainer | *Replace.* |
| | Faulty oil pump | *Inspect. If NG, replace.* |
| | Defective O/D clutch | *Inspect. If NG, replace.* |
| | Leakage from both “D” and “R” range fluid pressure circuit | *Inspect. If NG, replace valve body assembly.* |

www.cargeek.ir

| Condition | Possible cause | Correction / Reference Item |
|---|---|---|
| ***Lower than standard level in "D" range*** | Fluid leakage from direct clutch | *Inspect. If NG, replace.* |
| | Defective O/D clutch | *Inspect. If NG, replace.* |
| | Leakage from "D" range fluid pressure circuit | *Inspect. If NG, replace valve body assembly.* |
| ***Lower than standard level in "R" range*** | Fluid leakage from direct clutch | *Inspect. If NG, replace.* |
| | Defective O/D clutch | *Inspect. If NG, replace.* |
| | Fluid leakage from reverse brake | *Inspect. If NG, replace.* |
| | Leakage from "R" range fluid pressure circuit | *Inspect. If NG, replace valve body assembly.* |

## Engine Brake Test

S5JB0A5104017

**⚠ WARNING**

**Before test, make sure that there is no vehicle behind so as to prevent rear-end collision.**

1) While driving vehicle in 4th gear of "D" range, shift select lever down to "3" range and check if engine brake operates.
2) In the same way as in Step 1), check engine brake for operation when select lever is shifted down to "L" range.
3) Engine brake should operate in the test.

### Troubleshooting

| Condition | Possible cause | Correction / Reference Item |
|---|---|---|
| ***Failure to operate when shifted down to "2" range*** | Faulty second coast brake | *Inspect. If NG, replace.* |
| ***Failure to operate when shifted down to "L" range*** | Faulty reverse brake | *Inspect. If NG, replace.* |

## "P" Range Test

S5JB0A5104018

1) Stop vehicle on a slope of 5 degrees or more, shift select lever to "P" range and at the same time apply parking brake.
2) After stopping engine, depress brake pedal and release parking brake.
3) Then, release brake pedal gradually and check that vehicle remains stationary.
4) Depress brake pedal and shift select lever to "N" range.
5) Then, release brake pedal gradually and check that vehicle moves.

**⚠ WARNING**

**Before test, make sure no one is around vehicle or down on a slope and keep watchful for safety during test.**

### Troubleshooting

| Condition | Possible cause | Correction / Reference Item |
|---|---|---|
| ***Vehicle moves at "P" range or remains stationary at "N" range*** | Defective parking lock pawl or spring | *Inspect. If NG, repair.* |

www.cargeek.ir

 www.CarGeek.ir

## A/T Symptom Diagnosis

S5JB0A5104019

### Trouble Diagnosis 1

### Electrical repair

| Condition | Possible cause | Correction / Reference Item |
|---|---|---|
| ***Excessive shift shock*** | Shift solenoid valve No.1 and/or No.2 circuit faulty | *Inspect circuit for open, short and intermittent. If NG, repair.* |
| | Pressure control solenoid valve circuit faulty | *Inspect circuit for open, short and intermittent. If NG, repair.* |
| | Output shaft speed sensor circuit faulty | *Inspect circuit for open, short and intermittent. If NG, repair.* |
| | Input shaft speed sensor circuit faulty | *Inspect circuit for open, short and intermittent. If NG, repair.* |
| | Transmission fluid temperature sensor circuit faulty | *Inspect circuit for open, short and intermittent. If NG, repair.* |
| | CAN communication circuit faulty | *Inspect circuit for open, short and intermittent. If NG, repair.* |
| | Accelarator pedal position sensor circuit faulty | *Inspect circuit for open, short and intermittent referring to "DTC P0122: Throttle Position Sensor (Main) Circuit Low: in Section 1A", "DTC P0123: Throttle Position Sensor (Main) Circuit High: in Section 1A", "DTC P0222: Throttle Position Sensor (Sub) Circuit Low: in Section 1A" and "DTC P0223: Throttle Position Sensor (Sub) Circuit High: in Section 1A".* |
| | TCM | *Substitute a known-good TCM and recheck.* |
| | ECM | *Substitute a known-good ECM and recheck.* |
| ***No gear shift as 3rd gear*** | Shift solenoid valve No.1 and/or No.2 circuit faulty | *Inspect circuit for open, short and intermittent. If NG, repair.it faulty* |
| | Pressure control solenoid valve circuit faulty | *Inspect circuit for open, short and intermittent. If NG, repair.it faulty* |
| | TCM | *Substitute a known-good TCM and recheck.* |
| ***Poor 1 → 2 shift*** | Shift solenoid valve No.2 circuit faulty | *Inspect circuit for open, short and intermittent. If NG, repair.* |
| | Output shaft speed sensor circuit faulty | *Inspect circuit for open, short and intermittent. If NG, repair.* |
| | Transmission range sensor circuit faulty | *Inspect circuit for open, short and intermittent. If NG, repair.* |
| | CAN communication circuit faulty | *Inspect circuit for open, short and intermittent. If NG, repair.* |
| | Accelerator pedal position sensor circuit faulty | *Inspect circuit for open, short and intermittent referring to "DTC P0122: Throttle Position Sensor (Main) Circuit Low: in Section 1A", "DTC P0123: Throttle Position Sensor (Main) Circuit High: in Section 1A", "DTC P0222: Throttle Position Sensor (Sub) Circuit Low: in Section 1A" and "DTC P0223: Throttle Position Sensor (Sub) Circuit High: in Section 1A".* |
| | TCM | *Substitute a known-good TCM and recheck.* |
| | ECM | *Substitute a known-good ECM and recheck.* |

www.cargeek.ir

| Condition | Possible cause | Correction / Reference Item |
|---|---|---|
| ***Poor 2 → 3 shift*** | Shift solenoid valve No.1 circuit faulty | *Inspect circuit for open, short and intermittent. If NG, repair.* |
| | Output shaft speed sensor circuit faulty | *Inspect circuit for open, short and intermittent. If NG, repair.* |
| | Transmission range sensor circuit faulty | *Inspect circuit for open, short and intermittent. If NG, repair.* |
| | CAN communication circuit faulty | *Inspect circuit for open, short and intermittent. If NG, repair.* |
| | Accelerator pedal position sensor circuit faulty | *Inspect circuit for open, short and intermittent referring to "DTC P0122: Throttle Position Sensor (Main) Circuit Low: in Section 1A", "DTC P0123: Throttle Position Sensor (Main) Circuit High: in Section 1A", "DTC P0222: Throttle Position Sensor (Sub) Circuit Low: in Section 1A" and "DTC P0223: Throttle Position Sensor (Sub) Circuit High: in Section 1A".* |
| | TCM | *Substitute a known-good TCM and recheck.* |
| | ECM | *Substitute a known-good ECM and recheck.* |
| ***Poor 3 → O/D shift*** | Shift solenoid valve No.2 circuit faulty | *Inspect circuit for open, short and intermittent. If NG, repair.* |
| | Pressure control solenoid valve circuit faulty | *Inspect circuit for open, short and intermittent. If NG, repair.* |
| | Output shaft speed sensor circuit faulty | *Inspect circuit for open, short and intermittent. If NG, repair.* |
| | Inputshaft speed sensor circuit faulty | *Inspect circuit for open, short and intermittent. If NG, repair.* |
| | Transmission range sensor circuit faulty | *Inspect circuit for open, short and intermittent. If NG, repair.* |
| | CAN communication circuit faulty | *Inspect circuit for open, short and intermittent. If NG, repair.* |
| | Accelerator pedal position sensor circuit faulty | *Inspect circuit for open, short and intermittent referring to "DTC P0122: Throttle Position Sensor (Main) Circuit Low: in Section 1A", "DTC P0123: Throttle Position Sensor (Main) Circuit High: in Section 1A", "DTC P0222: Throttle Position Sensor (Sub) Circuit Low: in Section 1A" and "DTC P0223: Throttle Position Sensor (Sub) Circuit High: in Section 1A".* |
| | "3" position switch circuit faulty | *Refer to "No Gear Shift to 4th Gear: "* |
| | TCM | *Substitute a known-good TCM and recheck.* |
| | ECM | *Substitute a known-good ECM and recheck.* |

www.cargeek.ir

 www.CarGeek.ir

| Condition | Possible cause | Correction / Reference Item |
|---|---|---|
| ***Poor O/D → 3 shift*** | Shift solenoid valve No.2 circuit faulty | *Inspect circuit for open, short and intermittent. If NG, repair.* |
| | Pressure control solenoid valve circuit faulty | *Inspect circuit for open, short and intermittent. If NG, repair.* |
| | Output shaft speed sensor circuit faulty | *Inspect circuit for open, short and intermittent. If NG, repair.* |
| | Input shaft speed sensor circuit faulty | *Inspect circuit for open, short and intermittent. If NG, repair.* |
| | CAN communication circuit faulty | *Inspect circuit for open, short and intermittent. If NG, repair.* |
| | Accelerator pedal position sensor circuit faulty | *Inspect circuit for open, short and intermittent referring to "DTC P0122: Throttle Position Sensor (Main) Circuit Low: in Section 1A", "DTC P0123: Throttle Position Sensor (Main) Circuit High: in Section 1A", "DTC P0222: Throttle Position Sensor (Sub) Circuit Low: in Section 1A" and "DTC P0223: Throttle Position Sensor (Sub) Circuit High: in Section 1A".* |
| | "3" position switch circuit faulty | *Refer to "No Gear Shift to 4th Gear: "* |
| | TCM | *Substitute a known-good TCM and recheck.* |
| | ECM | *Substitute a known-good ECM and recheck.* |
| ***Poor 3 → 2 shift*** | Shift solenoid valve No.1 circuit faulty | *Inspect circuit for open, short and intermittent. If NG, repair.* |
| | Output shaft speed sensor circuit faulty | *Inspect circuit for open, short and intermittent. If NG, repair.* |
| | CAN communication circuit faulty | *Inspect circuit for open, short and intermittent. If NG, repair.* |
| | Accelerator pedal position sensor circuit faulty | *Inspect circuit for open, short and intermittent referring to "DTC P0122: Throttle Position Sensor (Main) Circuit Low: in Section 1A", "DTC P0123: Throttle Position Sensor (Main) Circuit High: in Section 1A", "DTC P0222: Throttle Position Sensor (Sub) Circuit Low: in Section 1A" and "DTC P0223: Throttle Position Sensor (Sub) Circuit High: in Section 1A".* |
| | TCM | *Substitute a known-good TCM and recheck.* |
| | ECM | *Substitute a known-good ECM and recheck.* |
| ***Poor 2 → 1 shift*** | Shift solenoid valve No.2 circuit faulty | *Inspect circuit for open, short and intermittent. If NG, repair.* |
| | Output shaft speed sensor circuit faulty | *Inspect circuit for open, short and intermittent. If NG, repair.* |
| | CAN communication circuit faulty | *Inspect circuit for open, short and intermittent. If NG, repair.* |
| | Accelerator pedal position sensor circuit faulty | *Inspect circuit for open, short and intermittent referring to "DTC P0122: Throttle Position Sensor (Main) Circuit Low: in Section 1A", "DTC P0123: Throttle Position Sensor (Main) Circuit High: in Section 1A", "DTC P0222: Throttle Position Sensor (Sub) Circuit Low: in Section 1A" and "DTC P0223: Throttle Position Sensor (Sub) Circuit High: in Section 1A".* |
| | TCM | *Substitute a known-good TCM and recheck.* |
| | ECM | *Substitute a known-good ECM and recheck.* |

www.cargeek.ir

| Condition | Possible cause | Correction / Reference Item |
|---|---|---|
| ***Incorrect gear shift point*** | Output shaft speed sensor circuit faulty | *Inspect circuit for open, short and intermittent. If NG, repair.* |
| | Pressure control solenoid valve circuit faulty | *Inspect circuit for open, short and intermittent. If NG, repair.* |
| | CAN communication circuit faulty | *Inspect circuit for open, short and intermittent. If NG, repair.* |
| | Accelerator pedal position sensor circuit faulty | *Inspect circuit for open, short and intermittent referring to "DTC P0122: Throttle Position Sensor (Main) Circuit Low: in Section 1A", "DTC P0123: Throttle Position Sensor (Main) Circuit High: in Section 1A", "DTC P0222: Throttle Position Sensor (Sub) Circuit Low: in Section 1A" and "DTC P0223: Throttle Position Sensor (Sub) Circuit High: in Section 1A".* |
| | TCM | *Substitute a known-good TCM and recheck.* |
| | ECM | *Substitute a known-good ECM and recheck.* |
| ***Non operate TCC / lock-up system*** | Lock-up control solenoid valve circuit faulty | *Inspect circuit for open, short and intermittent. If NG, repair.* |
| | Shift solenoid valve No.1 and/or No.2 circuit faulty | *Inspect circuit for open, short and intermittent. If NG, repair.* |
| | Pressure control solenoid valve cicuit faulty | *Inspect circuit for open, short and intermittent. If NG, repair.* |
| | Output shaft speed sensor circuit faulty | *Inspect circuit for open, short and intermittent. If NG, repair.* |
| | Input shaft speed sensor circuit faulty | *Inspect circuit for open, short and intermittent. If NG, repair.* |
| | Transmission range sensor circuit faulty | *Inspect circuit for open, short and intermittent. If NG, repair.* |
| | Transmission fluid temperature sensor circuit faulty | *Inspect circuit for open, short and intermittent. If NG, repair.* |
| | CAN communication circuit faulty | *Inspect circuit for open, short and intermittent. If NG, repair.* |
| | Crankshaft position sensor circuit faulty | *Inspect circuit for opnen, short and intermittent referring to "DTC P0335: Crankshaft Position (CKP) Sensor Circuit (For M16 Engine): in Section 1A".* |
| | Brake light switch circuit faulty | *Refer to "No Lock-Up Occurs: ".* |
| | Accelerator pedal position sensor circuit faulty | *Inspect circuit for open, short and intermittent referring to "DTC P0122: Throttle Position Sensor (Main) Circuit Low: in Section 1A", "DTC P0123: Throttle Position Sensor (Main) Circuit High: in Section 1A", "DTC P0222: Throttle Position Sensor (Sub) Circuit Low: in Section 1A" and "DTC P0223: Throttle Position Sensor (Sub) Circuit High: in Section 1A".* |
| | TCM | *Substitute a known-good TCM and recheck.* |
| | ECM | *Substitute a known-good ECM and recheck.* |
| ***Higher or lower stall speed*** | Pressure control solenoid valve circuit faulty | *Inspect circuit for open, short and intermittent. If NG, repair.* |
| | TCM | *Substitute a known-good TCM and recheck.* |
| ***Excessive "N" → "D" or "N" → "R" time lag*** | Pressure control solenoid valve circuit faulty | *Inspect circuit for open, short and intermittent. If NG, repair.* |
| | TCM | *Substitute a known-good TCM and recheck.* |
| ***Higher or lower line pressure*** | Pressure control solenoid valve circuit faulty | *Inspect circuit for open, short and intermittent. If NG, repair.* |
| | TCM | *Substitute a known-good TCM and recheck.* |
| ***Excessive slippage in all range*** | Pressure control solenoid valve circuit faulty | *Inspect circuit for open, short and intermittent. If NG, repair.* |
| | TCM | *Substitute a known-good TCM and recheck.* |

www.cargeek.ir

 www.CarGeek.ir

**Trouble Diagnosis 2**

**On-vehicle repair**

| Condition | Possible cause | Correction / Reference Item |
|---|---|---|
| ***Unable to run in all range*** | Faulty valve body component | *Replace valve body assembly.* |
| ***Excessive shift shock*** | Engine abnormal condition | *Inspect and repair engine.* |
| | Malfunction of shift solenoid valve No.1 and/or No.2 | *Inspect. If NG, replace.* |
| | Malfunction of output shaft speed sensor | *Inspect. If NG, replace.* |
| | Malfunction of input shaft speed sensor | *Inspect. If NG, replace.* |
| | Malfunction of transmission range sensor | *Inspect. If NG, replace.* |
| | Malfunction of Transmission fluid temperature sensor | *Inspect. If NG, replace.* |
| | Malfunction of pressure control solenoid valve | *Inspect. If NG, replace valve body assembly.* |
| | Malfunction of brake light switch except N → D or N → R shifting | *Inspect referring to "Stop (Brake) Lamp Switch Inspection: in Section 9B". If NG, replace.* |
| | Malfunction of accelerator pedal position sensor | *Inspect referring to "DTC P0122: Throttle Position Sensor (Main) Circuit Low: in Section 1A", "DTC P0123: Throttle Position Sensor (Main) Circuit High: in Section 1A", "DTC P0222: Throttle Position Sensor (Sub) Circuit Low: in Section 1A" and "DTC P0223: Throttle Position Sensor (Sub) Circuit High: in Section 1A".* |
| | Faulty valve body component | *Replace valve body assembly.* |
| ***Poor 1 → 2 shift*** | Malfunction of shift solenoid valve No.2 | *Inspect. If NG, replace.* |
| | Malfunction of output shaft speed sensor | *Inspect. If NG, replace.* |
| | Malfunction of transmission range sensor | *Inspect. If NG, replace.* |
| | Malfunction of accelerator pedal position sensor | *Inspect referring to "DTC P0122: Throttle Position Sensor (Main) Circuit Low: in Section 1A", "DTC P0123: Throttle Position Sensor (Main) Circuit High: in Section 1A", "DTC P0222: Throttle Position Sensor (Sub) Circuit Low: in Section 1A" and "DTC P0223: Throttle Position Sensor (Sub) Circuit High: in Section 1A".* |
| | Faulty valve body component | *Replace valve body assembly.* |
| ***Poor 2 → 3 shift*** | Malfunction of shift solenoid valve No.1 | *Inspect. If NG, replace.* |
| | Malfunction of output shaft speed sensor | *Inspect. If NG, replace.* |
| | Malfunction of transmission range sensor | *Inspect. If NG, replace.* |
| | Malfunction of accelerator pedal position sensor | *Inspect referring to "DTC P0122: Throttle Position Sensor (Main) Circuit Low: in Section 1A", "DTC P0123: Throttle Position Sensor (Main) Circuit High: in Section 1A", "DTC P0222: Throttle Position Sensor (Sub) Circuit Low: in Section 1A" and "DTC P0223: Throttle Position Sensor (Sub) Circuit High: in Section 1A".* |
| | Faulty valve body component | *Replace valve body assembly.* |

www.cargeek.ir

| Condition | Possible cause | Correction / Reference Item |
|---|---|---|
| ***Poor 3 → O/D shift*** | Malfunction of shift solenoid valve No.2 | *Inspect. If NG, replace.* |
| | Malfunction of output shaft speed sensor | *Inspect. If NG, replace.* |
| | Malfunction of transmission range sensor | *Inspect. If NG, replace.* |
| | Malfunction of “3” position switch | *Inspect. If NG, replace.* |
| | Malfunction of accelerator pedal position sensor | *Inspect referring to “DTC P0122: Throttle Position Sensor (Main) Circuit Low: in Section 1A”, “DTC P0123: Throttle Position Sensor (Main) Circuit High: in Section 1A”, “DTC P0222: Throttle Position Sensor (Sub) Circuit Low: in Section 1A” and “DTC P0223: Throttle Position Sensor (Sub) Circuit High: in Section 1A”.* |
| | Malfunction of pressure control solenoid valve | *Inspect. If NG, replace valve body assembly.* |
| | Faulty valve body component | *Replace valve body assembly.* |
| ***Poor O/D → 3 shift*** | Malfunction of shift solenoid valve No.2 | *Inspect. If NG, replace.* |
| | Malfunction of output shaft speed sensor | *Inspect. If NG, replace.* |
| | Malfunction of “3” position switch | *Inspect. If NG, replace.* |
| | Malfunction of accelerator pedal position sensor | *Inspect referring to “DTC P0122: Throttle Position Sensor (Main) Circuit Low: in Section 1A”, “DTC P0123: Throttle Position Sensor (Main) Circuit High: in Section 1A”, “DTC P0222: Throttle Position Sensor (Sub) Circuit Low: in Section 1A” and “DTC P0223: Throttle Position Sensor (Sub) Circuit High: in Section 1A”.* |
| | Malfunction of pressure control solenoid valve | *Inspect. If NG, replace valve body assembly.* |
| | Faulty valve body component | *Replace valve body assembly.* |
| ***Poor 3 → 2 shift*** | Malfunction of shift solenoid valve No.1 | *Inspect. If NG, replace.* |
| | Malfunction of output shaft speed sensor | *Inspect. If NG, replace.* |
| | Malfunction of accelerator pedal position sensor | *Inspect referring to “DTC P0122: Throttle Position Sensor (Main) Circuit Low: in Section 1A”, “DTC P0123: Throttle Position Sensor (Main) Circuit High: in Section 1A”, “DTC P0222: Throttle Position Sensor (Sub) Circuit Low: in Section 1A” and “DTC P0223: Throttle Position Sensor (Sub) Circuit High: in Section 1A”.* |
| | Faulty valve body component | *Replace valve body assembly.* |
| ***Poor 2 → 1 shift*** | Malfunction of shift solenoid valve No.2 | *Inspect. If NG, replace.* |
| | Malfunction of output shaft speed sensor | *Inspect. If NG, replace.* |
| | Malfunction of accelerator pedal position sensor | *Inspect referring to “DTC P0122: Throttle Position Sensor (Main) Circuit Low: in Section 1A”, “DTC P0123: Throttle Position Sensor (Main) Circuit High: in Section 1A”, “DTC P0222: Throttle Position Sensor (Sub) Circuit Low: in Section 1A” and “DTC P0223: Throttle Position Sensor (Sub) Circuit High: in Section 1A”.* |
| | Faulty valve body component | *Replace valve body assembly.* |

www.cargeek.ir

 www.CarGeek.ir

| Condition | Possible cause | Correction / Reference Item |
|---|---|---|
| ***Incorrect shift point*** | Engine abnormal condition | *Inspect and repair engine* |
| | Malfunction of output shaft speed sensor | *Inspect. If NG, replace.* |
| | Malfunction of accelerator pedal position sensor | *Inspect referring to "DTC P0122: Throttle Position Sensor (Main) Circuit Low: in Section 1A", "DTC P0123: Throttle Position Sensor (Main) Circuit High: in Section 1A", "DTC P0222: Throttle Position Sensor (Sub) Circuit Low: in Section 1A" and "DTC P0223: Throttle Position Sensor (Sub) Circuit High: in Section 1A".* |
| ***Non operate TCC / lock-up system*** | Malfunction of lock-up solenoid valve | *Inspect. If NG, replace.* |
| | Malfunction of shaft solenoid valve No.1 and/or No.2 | *Inspect. If NG, replace.* |
| | Malfunction of output shaft speed sensor | *Inspect. If NG, replace.* |
| | Malfunction of input shaft speed sensor | *Inspect. If NG, replace.* |
| | Malfunction of transmission range sensor | *Inspect. If NG, replace.* |
| | Malfunction of transmission fluid temperature sensor | *Inspect. If NG, replace.* |
| | Malfunction of pressure control solenoid valve | *Inspect. If NG, replace valve body assembly.* |
| | Malfunction of brake light switch | *Inspect referring to "Stop (Brake) Lamp Switch Inspection: in Section 9B". If NG, replace.* |
| | Malfunction of accelerator pedal position sensor | *Inspect referring to "DTC P0122: Throttle Position Sensor (Main) Circuit Low: in Section 1A", "DTC P0123: Throttle Position Sensor (Main) Circuit High: in Section 1A", "DTC P0222: Throttle Position Sensor (Sub) Circuit Low: in Section 1A" and "DTC P0223: Throttle Position Sensor (Sub) Circuit High: in Section 1A".* |
| | Faulty valve body component | *Replace valve body assembly.* |
| ***Excessive "N" → "D" or "N" → "R" time lag*** | Pressure control solenoid valve circuit faulty | *Inspect. If NG, replace valve body assembly.* |
| | Clogged oil strainer | *Replace.* |
| | Faulty valve body component | *Replace valve body assembly.* |

**Trouble Diagnosis 3**

**Off-vehicle repair**

| Condition | Possible cause | Correction / Reference Item |
|---|---|---|
| ***Unable to run in all range*** | Faulty oil pump | *Inspect. If NG, replace.* |
| | Seized or broken planetary gear | *Inspect. If NG, replace.* |
| | Fluid pressure leakage to overdrive clutch due to wear of oil pump bushing | *Inspect. If NG, replace.* |
| | Damaged drive plate | *Inspect. If NG, replace.* |
| | Faulty torque converter | *Replace.* |
| ***Excessive "N" → "D" shift shock*** | Faulty forward clutch | *Inspect. If NG, replace.* |
| ***Excessive "N" → "R" shift shock*** | Faulty reverse brake | *Inspect. If NG, replace.* |
| | Faulty direct clutch | *Inspect. If NG, replace.* |
| ***Poor 1 → 2 shift, excessive shock or slippage*** | Faulty second brake | *Inspect. If NG, replace.* |
| | Faulty one-way clutch No.1 | *Inspect. If NG, replace.* |
| | Faulty one-way clutch No.2 | *Inspect. If NG, replace.* |
| ***Poor 2 → 3 shift, excessive shock or slippage*** | Faulty direct clutch | *Inspect. If NG, replace.* |
| | Faulty one-way clutch No.1 | *Inspect. If NG, replace.* |

www.cargeek.ir

| Condition | Possible cause | Correction / Reference Item |
|---|---|---|
| ***Poor 3 ↔ O/D shift, excessive shock or slippage*** | Faulty O/D clutch | *Inspect. If NG, replace.* |
| | Faulty O/D brake | *Inspect. If NG, replace.* |
| ***Poor 3 → 2 shift, excessive shock or slippage*** | Faulty direct clutch | *Inspect. If NG, replace.* |
| | Faulty one-way clutch No.1 | *Inspect. If NG, replace.* |
| ***Poor 2 → 1 shift, excessive shock or slippage*** | Faulty second brake | *Inspect. If NG, replace.* |
| | Faulty one-way clutch No.1 | *Inspect. If NG, replace.* |
| | Faulty one-way clutch No.2 | *Inspect. If NG, replace.* |
| ***Non operate TCC / lock-up system*** | Faulty torque converter | *Replace.* |
| ***Excessive "N" → "D" time lag*** | Faulty oil pump | *Inspect. If NG, replace.* |
| | Faulty forward clutch | *Inspect. If NG, replace.* |
| | Leakage from "D" range fluid pressure circuit | *Overhaul or replace valve body assembly.* |
| ***Excessive "N" → "R" time lag*** | Faulty oil pump | *Inspect. If NG, replace.* |
| | Faulty direct clutch | *Inspect. If NG, replace.* |
| | Faulty reverse brake | *Inspect. If NG, replace.* |
| | Leakage from "R" range fluid pressure circuit | *Overhaul or replace valve body assembly.* |
| ***Poor engine brake in downshift to "2" range*** | Faulty 2nd coast brake | *Inspect. If NG, replace.* |
| ***Poor engine brake in downshift to "L" range*** | Faulty reverse brake | *Inspect. If NG, replace.* |

## No Gear Shift to 4th Gear

S5JB0A5104020

### System Description

TCM does not shift to 5th gear under any of the following condition.

- "3" position switch signal is inputted.
- 4L/N switch is turned ON. (4L mode)
- TCM detects the following DTCs.
  DTC, P0722, P0752, P0962, P0963, P0973, P0974, P0976, P0977, P1702

### Troubleshooting

**⚠ WARNING**

- **When performing a road test, select a place where there is no traffic or possibility of a traffic accident and be very careful during testing to avoid occurrence of an accident.**
- **Road test should be carried out with 2 persons, a driver and tester, on a level road.**

| Step | Action | Yes | No |
|---|---|---|---|
| 1 | *Was "A/T System Check" performed?* | Go to Step 2. | Go to "A/T System Check: ". |
| 2 | **Check DTC**<br>*Is DTC, P0722, P0752, P0962, P0963, P0973, P0974, P0976, P0977 or P1702 detected?* | Perform DTC Flow to repair and retry. | Go to Step 3. |
| 3 | **ECT check**<br>1) Warm up engine to normal operating temperature.<br>2) Check ECT monitored by TCM using scan tool.<br>*Is ECT indicated –40 ℃ (–40 ℉)?* | Go to Step 4. | Faulty ECT sensor, its circuit or engine cooling system. If OK, substitute a known-good TCM and recheck. |

www.cargeek.ir

 www.CarGeek.ir

| Step | Action | Yes | No |
|---|---|---|---|
| 4 | **"3" position switch signal inspection**<br>1) With ignition switch ON, check voltage between terminal "E92-20" of TCM connector and ground under the following conditions.<br>**"3" position switch specification**<br>**Shift selector lever to "P", "R", "N" or "D" range: 2.9 – 3.8 V**<br>**Shift selector lever to "3", "2" or "L" range: 1.4 – 2.0 V**<br>*Is result as specified?* | Go to Step 5. | Faulty "3" position switch or its circuit. If OK, substitute a known-good TCM and recheck. |
| 5 | **4L/N switch signal inspection**<br>1) With ignition switch ON, check voltage between terminal "E93-4" of TCM connector and ground.<br>**4L/N switch specification**<br>**Transfer gear position "4H": Battery voltage**<br>**Transfer gear position "4L" or "N": 0 – 2 V**<br>*Is result as specified?* | Substitute a known-good TCM and recheck. | Faulty 4L/N switch or its circuit. If OK, substitute a known-good TCM and recheck. |

## No Lock-Up Occurs

S5JB0A5104021

### System Description

TCM turns TCC pressure control solenoid OFF under any of the following conditions.

- Engine coolant temperature is lower than 60 °C (140 °F).
- 4L/N switch is turned ON. (4L mode)
- Brake light switch is turned ON. (Brake pedal is depressed)
- TCM detects the following DTCs.
  P0712, P0713, P0717, P0722, P0962, P0963, P0973, P0974, P0976, P0977, P1702, P1703, P1774, P1777, P2763 and P2764

### Troubleshooting

**⚠ WARNING**

- **When performing a road test, select a place where there is no traffic or possibility of a traffic accident and be very careful during testing to avoid occurrence of an accident.**
- **Road test should be carried out with 2 persons, a driver and tester, on a level road.**

| Step | Action | Yes | No |
|---|---|---|---|
| 1 | *Was "A/T System Check" performed?* | Go to Step 2. | Go to "A/T System Check: ". |
| 2 | **Check DTC**<br>*Is DTC P0712, P0713, P0717, P0722, P0962, P0963, P0973, P0974, P0976, P0977, P1702, P1703, P1774, P1777, P2763 or P2764 detected?* | Perform DTC Flow to repair and retry. | Go to Step 3. |
| 3 | **ECT check**<br>1) Warm up engine to normal operating temperature.<br>2) Check ECT using scan tool.<br>*Is ECT more than 60 °C (140 °F)?* | Go to Step 4. | Faulty ECT sensor, its circuit or engine cooling system. If OK, substitute a known-good TCM and recheck. |

www.cargeek.ir

| Step | Action | Yes | No |
|---|---|---|---|
| 4 | **4L/N switch signal inspection**<br>1) With ignition switch ON, check voltage between terminal "E92-4" of TCM connector and ground.<br>**4L/N switch specification**<br>**Transfer gear position or "4H": Battery voltage**<br>**Transfer gear position "4L" or "N": 0 – 2 V**<br>*Is result as specified?* | Go to Step 5. | Faulty "4L" switch or its circuit. If OK, substitute a known-good TCM and recheck. |
| 5 | **Brake light switch signal inspection**<br>1) With ignition switch ON, check voltage between terminal "E61-34" of ECM connector and ground.<br>**Brake light switch specification**<br>**Brake pedal is released: 0 – 1 V**<br>**Brake pedal is depressed: Battery voltage**<br>*Is result as specified?* | Substitute a known-good TCM and recheck. | Mis-adjusted brake light switch, faulty brake light switch or its circuit. If OK, substitute a known-good TCM and recheck. |

## Transmission Warning Light Circuit Check – Light Does Not Come "ON" at Ignition Switch ON (Vehicle is equipped with engine diagnosis connector)

S5JB0A5104063

### Troubleshooting

| Step | Action | Yes | No |
|---|---|---|---|
| 1 | **Combination Meter Power Supply Check**<br>1) Turn ignition switch ON.<br>*Does other indicator / warning lights in combination meter comes ON?* | Go to Step 2. | Repair combination meter power supply circuit referring to "Combination Meter Circuit Diagram: in Section 9C". |
| 2 | 1) TCM power and ground circuit check referring to "TCM Power and Ground Circuit Check: ".<br>*Is it in good condition?* | Go to Step 3. | Repair or replace. |
| 3 | **DTC check**<br>1) Check DTC referring to "DTC Check: ".<br>*Is there DTC P1774 or P1775?* | Go to applicable DTC diag. flow. | Go to Step 4. |
| 4 | **Combination Meter Function Check**<br>1) Turn ignition switch ON.<br>*Does A/T selector position indicator show correct select lever position?* | Replace combination meter. | Substitute a known-good TCM and recheck. |

## Transmission Warning Light Circuit Check – Light Remains "ON" at Ignition Switch ON (Vehicle is equipped with engine diagnosis connector)

S5JB0A5104064

### Troubleshooting

| Step | Action | Yes | No |
|---|---|---|---|
| 1 | **Diagnostic Trouble Code (DTC) Check**<br>1) Check DTC referring to "DTC Check: ".<br>*Is there any DTC(s)?* | Perform DTC Flow to repair and retry. | Substitute a known-good TCM and recheck. If OK, substitute a known-good combination meter and recheck. |

www.cargeek.ir

 www.CarGeek.ir

## “POWER” Light Circuit Check – Light Does Not Come “ON” at Ignition Switch ON

S5JB0A5104065

### Troubleshooting

| Step | Action | Yes | No |
|---|---|---|---|
| 1 | **Combination Meter Power Supply Check**<br>1) Turn ignition switch ON.<br>*Does other indicator / warning lights in combination meter comes ON?* | Go to Step 2. | Repair combination meter power supply circuit referring to “Combination Meter Circuit Diagram: in Section 9C”. |
| 2 | 1) TCM power and ground circuit check referring to “TCM Power and Ground Circuit Check: ”.<br>*Is it in good condition?* | Go to Step 3. | Repair or replace. |
| 3 | **DTC check**<br>1) Check DTC referring to “DTC Check: ”.<br>*Is there DTC P1774 or P1775?* | Go to applicable DTC diag. flow. | Go to Step 4. |
| 4 | **Combination Meter Function Check**<br>1) Turn ignition switch ON.<br>*Does A/T selector position indicator show correct select lever position?* | Replace combination meter. | Substitute a known-good TCM and recheck. |

## DTC P0705 Transmission Range Sensor Circuit Malfunction

S5JB0A5104026

### Wiring Diagram

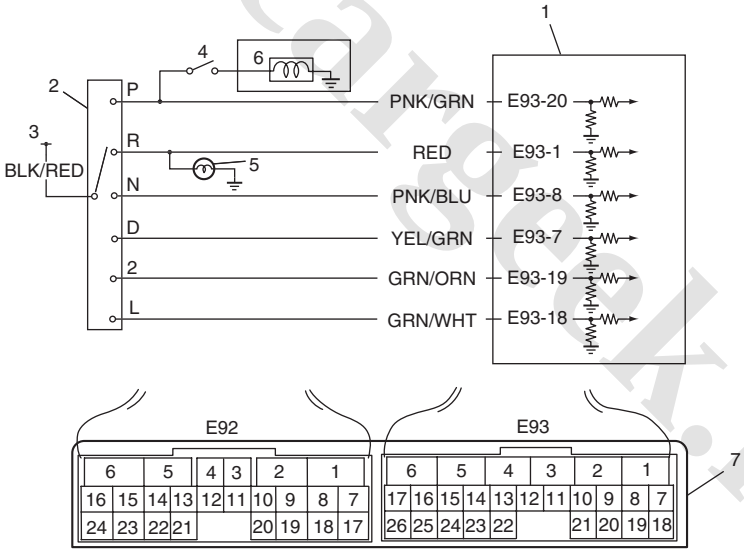


I5JB0A510020-01

| | | |
|---|---|---|
| 1. TCM | 4. Brake light switch | 7. Terminal arrangement of TCM connector (viewed from harness side) |
| 2. Transmission range sensor (switch) | 5. Back-up light | |
| 3. From ignition switch | 6. Shift lock solenoid | |

### DTC Detecting Condition and Trouble Area

| DTC Detecting Condition | Trouble Area |
|---|---|
| Multiple signals are inputted simultaneously for 2 seconds.<br>(1 driving cycle detection logic) | • Select cable maladjusted.<br>• Transmission range sensor (switch) maladjusted.<br>• Transmission range sensor (switch) or its circuit malfunction.<br>• TCM |

www.cargeek.ir

**DTC Confirmation Procedure**

1) Connect scan tool to DLC with ignition switch OFF.
2) Clear DTCs in TCM and ECM memories by using scan tool.
3) Start engine and shift select lever to “D” range.
4) Keep engine running at idle speed for 25 seconds or more.
5) Check DTC, pending DTC and freeze-frame data.

**DTC Troubleshooting**

| Step | Action | Yes | No |
|---|---|---|---|
| 1 | *Was “A/T System Check: ” performed?* | Go to Step 2. | Go to “A/T System Check: ”. |
| 2 | *Do you have SUZUKI scan tool?* | Go to Step 3. | Go to Step 4. |
| 3 | **Check transmission range sensor (switch) circuit for operation**<br>Check by using SUZUKI scan tool:<br>1) Connect SUZUKI scan tool to DLC with ignition switch OFF.<br>2) Turn ignition switch ON and check transmission range sensor signal (“P”, “R”, “N”, “D”, “2” or “L”) on display when shifting select lever to each range.<br>*Is applicable range indicated?* | Intermittent trouble. Check for intermittent trouble referring to “Intermittent and Poor Connection Inspection: in Section 00”. | Go to Step 5. |
| 4 | **Check transmission range sensor (switch) circuit for operation**<br>Check without using SUZUKI scan tool:<br>1) Turn ignition switch ON.<br>2) Check voltage at terminals “E93-1”, “E93-7”, “E93-8”, “E93-18”, “E93-19” and “E93-20” respectively with select lever shifted to each range.<br>Taking terminal “E93-1” as an example, is battery voltage will be indicated only when shift lever is shifted to “R” range and 0 V for other ranges as shown in table. Check voltage at other terminals likewise, referring to table.<br>*Are check results satisfactory?* | Intermittent trouble. Check for intermittent trouble referring to “Intermittent and Poor Connection Inspection: in Section 00”. | Go to Step 5. |
| 5 | **Check transmission range sensor (switch) for installation position**<br>1) Check transmission range sensor (switch) for installation position referring to “Transmission Range Sensor Inspection and Adjustment: ”.<br>*Is it adjusted correctly?* | Go to Step 6. | Adjust transmission range sensor (switch) and recheck. |
| 6 | **Check select cable for adjustment**<br>1) Check select cable for adjustment referring to “Select Cable Adjustment: ”.<br>*Is it adjusted correctly?* | Go to Step 7. | Adjust select cable and recheck. |
| 7 | **Check transmission range sensor (switch)**<br>1) Check transmission range sensor (switch) referring to “Transmission Range Sensor Inspection and Adjustment: ”.<br>*Are check results satisfactory?* | Transmission range sensor circuit shorted to power circuit or shorted each other. If wires and connections are OK, substitute a known-good TCM and recheck. | Replace transmission range sensor (switch). |

www.cargeek.ir

 www.CarGeek.ir

| | | Terminal | | | | | |
|---|---|---|---|---|---|---|---|
| | | E93-20 | E93-1 | E93-8 | E93-7 | E93-19 | E93-18 |
| Select lever position | P | 8 – 14 V | 0 V | 0 V | 0 V | 0 V | 0 V |
| | R | 0 V | 8 – 14 V | 0 V | 0 V | 0 V | 0 V |
| | N | 0 V | 0 V | 8 – 14 V | 0 V | 0 V | 0 V |
| | D or 3 | 0 V | 0 V | 0 V | 8 – 14 V | 0 V | 0 V |
| | 2 | 0 V | 0 V | 0 V | 0 V | 8 – 14 V | 0 V |
| | L | 0 V | 0 V | 0 V | 0 V | 0 V | 8 – 14 V |

## DTC P0707 Transmission Range Sensor Circuit Low

S5JB0A5104027

### Wiring Diagram

Refer to “DTC P0705 Transmission Range Sensor Circuit Malfunction: ”.

### DTC Detecting Condition and Trouble Area

| DTC Detecting Condition | Trouble Area |
|---|---|
| Transmission range switch signal (P, R, N, D, 2, L) is not inputted for more than 2 seconds in the following condition.<br>• Vehicle speed is more than 30 km/h (19 mile/h).<br>And<br>• Engine speed is more than 1500 rpm.<br>(2 driving cycle detection logic) | • Select cable maladjusted.<br>• Transmission range sensor (switch) maladjusted.<br>• Transmission range sensor (switch) or its circuit malfunction.<br>• TCM |

### DTC Confirmation Procedure

1) Connect scan tool to DLC with ignition switch OFF.
2) Clear DTCs in TCM and ECM memories by using scan tool.
3) Start engine and shift select lever to “D” range.
4) Start vehicle and increase vehicle speed to 50 km/h (31 mile/h) or more for 2 minutes.
5) Stop vehicle and turn ignition switch OFF.
6) Repeat Step 3) to 5) one time.
7) Stop vehicle.
8) Check DTC, pending DTC and freeze-frame data.

### DTC Troubleshooting

| Step | Action | Yes | No |
|---|---|---|---|
| 1 | *Was “A/T System Check” performed?* | Go to Step 2. | Go to “A/T System Check: ”. |
| 2 | *Do you have SUZUKI scan tool?* | Go to Step 3. | Go to Step 4. |
| 3 | **Check transmission range sensor (switch) circuit for operation**<br>Check by using SUZUKI scan tool:<br>1) Connect SUZUKI scan tool to DLC with ignition switch OFF.<br>2) Turn ignition switch ON and check transmission range sensor signal (“P”, “R”, “N”, “D”, “2” or “L”) on display when shifting select lever to each range.<br>*Is applicable range indicated?* | Intermittent trouble. Check for intermittent trouble referring to “Intermittent and Poor Connection Inspection: in Section 00”. | Go to Step 5. |

www.cargeek.ir

| Step | Action | Yes | No |
|---|---|---|---|
| 4 | **Check transmission range sensor (switch) circuit for operation**<br>Check without using SUZUKI scan tool:<br>1) Turn ignition switch ON.<br>2) Check voltage at terminals “E93-1”, “E93-7”, “E93-8”, “E93-18”, “E93-19” and “E93-20” respectively with select lever shifted to each range.<br>Taking terminal “E93-1” as an example, is battery voltage will be indicated only when shift lever is shifted to “R” range and 0 V for other ranges as shown in table. Check voltage at other terminals likewise, referring to table.<br>*Are check results satisfactory?* | Intermittent trouble. Check for intermittent trouble referring to “Intermittent and Poor Connection Inspection: in Section 00”. | Go to Step 5. |
| 5 | **Check transmission range sensor (switch) for installation position**<br>1) Check transmission range sensor (switch) for installation position referring to “Transmission Range Sensor Inspection and Adjustment: ”.<br>*Is it adjusted correctly?* | Go to Step 6. | Adjust transmission range sensor (switch) and recheck. |
| 6 | **Check select cable for adjustment**<br>1) Check select cable for adjustment referring to “Select Cable Adjustment: ”.<br>*Is it adjusted correctly?* | Go to Step 7. | Adjust select cable and recheck. |
| 7 | **Check transmission range sensor (switch)**<br>1) Check transmission range sensor (switch) referring to “Transmission Range Sensor Inspection and Adjustment: ”.<br>*Are check results satisfactory?* | Transmission range sensor circuit open or shorted to ground. If wires and connections are OK, substitute a known-good TCM and recheck. | Replace transmission range sensor (switch). |

| | | Terminal | | | | | |
|---|---|---|---|---|---|---|---|
| | | **E93-20** | **E93-1** | **E93-8** | **E93-7** | **E93-19** | **E93-18** |
| Select lever position | P | 8 – 14 V | 0 V | 0 V | 0 V | 0 V | 0 V |
| | R | 0 V | 8 – 14 V | 0 V | 0 V | 0 V | 0 V |
| | N | 0 V | 0 V | 8 – 14 V | 0 V | 0 V | 0 V |
| | D or 3 | 0 V | 0 V | 0 V | 8 – 14 V | 0 V | 0 V |
| | 2 | 0 V | 0 V | 0 V | 0 V | 8 – 14 V | 0 V |
| | L | 0 V | 0 V | 0 V | 0 V | 0 V | 8 – 14 V |

www.cargeek.ir

 www.CarGeek.ir

## DTC P0712 Transmission Fluid Temperature Sensor “A” Circuit Low

S5JB0A5104029

### Wiring Diagram

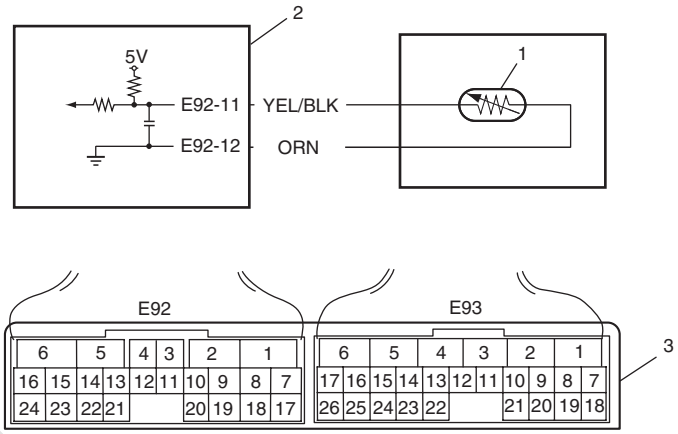


I5JB0A510021-02

| | |
|---|---|
| 1. Transmission fluid temperature sensor | 3. Terminal arrangement of TCM connector (viewed from harness side) |
| 2. TCM | |

### DTC Detecting Condition and Trouble Area

| DTC Detecting Condition | Trouble Area |
|---|---|
| Transmission temperature sensor terminal voltage is less than 0.05 V for 10 seconds or more after ignition switch ON.<br>(1 driving cycle detection logic) | • Transmission fluid temperature sensor or its circuit.<br>• TCM |

### DTC Confirmation Procedure

1) Connect scan tool to DLC with ignition switch OFF.
2) Clear DTCs in TCM and ECM memories by using scan tool.
3) Start engine.
4) Keep engine running at idle speed for 1 minute or more.
5) Check DTC, pending DTC and freeze-frame data.

### DTC Troubleshooting

| Step | Action | Yes | No |
|---|---|---|---|
| 1 | *Was “A/T System Check” performed?* | Go to Step 2. | Go to “A/T System Check: ”. |
| 2 | **Check transmission fluid temperature sensor A circuit for ground short**<br>1) Turn ignition switch OFF.<br>2) Disconnect TCM connectors from TCM.<br>3) Check for proper connection to transmission fluid temperature sensor at terminal “E92-11” and “E92-12”.<br>4) If OK, check continuity between terminal “E92-11” of disconnected harness side TCM connector and ground.<br>*Is continuity indicated?* | Transmission fluid temperature sensor circuit is shorted to ground. If circuit is OK, go to Step 3. | Go to Step 3. |
| 3 | **Inspection transmission fluid temperature sensor**<br>1) Inspection transmission fluid temperature sensor referring to “Transmission Fluid Temperature Sensor Inspection: ”.<br>*Is result satisfactory?* | Intermittent trouble or faulty TCM. Check for intermittent trouble referring to “Intermittent and Poor Connection Inspection: in Section 00”. If OK, substitute a known-good TCM and recheck. | Replace valve body harness including transmission fluid temperature sensor referring to “Transmission Fluid Temperature Sensor Removal and Installation: ”. |

www.cargeek.ir

## DTC P0713 Transmission Fluid Temperature Sensor “A” Circuit High

S5JB0A5104030

### Wiring Diagram

Refer to “DTC P0712 Transmission Fluid Temperature Sensor “A” Circuit Low: ”.

### DTC Detecting Condition and Trouble Area

| DTC Detecting Condition | Trouble Area |
|---|---|
| Transmission temperature sensor terminal voltage is less than 4.89 V under vehicle condition shown in the following.<br>• Ignition switch is turned on for 15 minutes or more<br>• Engine coolant temperature is more than 50 °C (122 °F) (1 driving cycle detection logic) | • Transmission fluid temperature sensor or its circuit.<br>• TCM |

### DTC Confirmation Procedure

1) Connect scan tool to DLC with ignition switch OFF.
2) Clear DTCs in TCM and ECM memories by using scan tool.
3) Start engine.
4) Start vehicle and increase vehicle speed to about 40 km/h (25 mile/h) for 20 minutes or more.
5) Stop vehicle.
6) Check DTC, pending DTC and freeze-frame data.

### DTC Troubleshooting

| Step | Action | Yes | No |
|---|---|---|---|
| 1 | *Was “A/T System Check” performed?* | Go to Step 2. | Go to “A/T System Check: ”. |
| 2 | **Check transmission fluid temperature sensor circuit for open**<br>1) Turn ignition switch OFF.<br>2) Disconnect TCM connectors from TCM.<br>3) Check for proper connection to transmission fluid temperature sensor at terminal “E92-11” and “E92-12”.<br>4) If OK, check continuity between terminal “E92-11” and “E92-12” of disconnected harness side TCM connector.<br>*Is continuity indicated?* | Go to Step 3. | Transmission fluid temperature sensor circuit is open circuit. |
| 3 | **Check transmission fluid temperature sensor circuit for power supply short**<br>1) Cool down A/T fluid temperature under ambient temperature.<br>2) Connect TCM connectors to TCM with ignition switch OFF.<br>3) Turn ignition switch ON.<br>4) Measure voltage between terminal “E92-11” of TCM connector and ground.<br>*Is it 4.89 V or more?* | Transmission fluid temperature sensor circuit is shorted to power supply circuit. If circuit is OK, go to Step 4. | Intermittent trouble or faulty TCM. Check for intermittent trouble referring to “Intermittent and Poor Connection Inspection: in Section 00”. If OK, substitute a known-good TCM and recheck. |
| 4 | **Inspection transmission fluid temperature sensor**<br>1) Inspection transmission fluid temperature sensor referring to “Transmission Fluid Temperature Sensor Inspection: ”.<br>*Is result satisfactory?* | Intermittent trouble or faulty TCM. Check for intermittent trouble referring to “Intermittent and Poor Connection Inspection: in Section 00”. If OK, substitute a known-good TCM and recheck. | Replace valve body harness including transmission fluid temperature sensor referring to “Transmission Fluid Temperature Sensor Removal and Installation: ”. |

www.cargeek.ir

 www.CarGeek.ir

## DTC P0717 Input / Turbine Speed Sensor Circuit No Signal

S5JB0A5104031

### Wiring Diagram

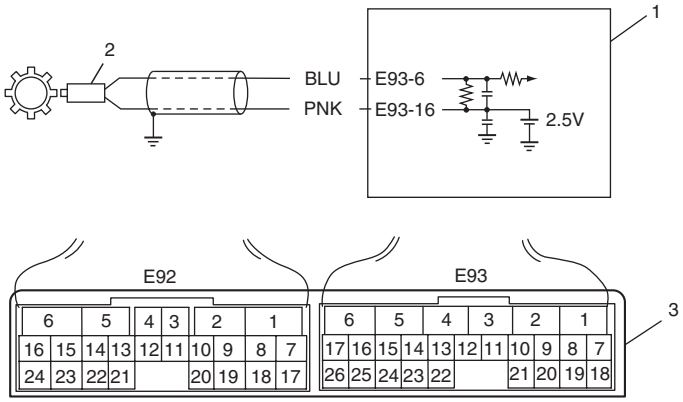


I5JB0A510022-01

| | |
|---|---|
| 1. TCM | 3. Terminal arrangement of TCM connector (viewed from harness side) |
| 2. Input shaft speed sensor | |

### DTC Detecting Condition and Trouble Area

| DTC Detecting Condition | Trouble Area |
|---|---|
| No pulse signal of input shaft speed sensor is inputted for 5 pulses period of output shaft speed sensor through it is detected more than 600 rpm.<br>(1 driving cycle detection logic) | • Input shaft speed sensor or its circuit malfunction.<br>• Improper input shaft speed sensor installation.<br>• Damaged clutch drum.<br>• Foreign material attachment to sensor or drum.<br>• TCM |

### DTC Confirmation Procedure

1) Connect scan tool to DLC with ignition switch OFF.
2) Clear DTCs in TCM and ECM memories by using scan tool.
3) Start engine and shift select lever to “D” range.
4) Start vehicle and increase vehicle speed to about 40 km/h (25 mile/h) for 3 minutes or more.
5) Stop vehicle.
6) Check DTC, pending DTC and freeze-frame data.

### DTC Troubleshooting

| Step | Action | Yes | No |
|---|---|---|---|
| 1 | *Was “A/T System Check” performed?* | Go to Step 2. | Go to “A/T System Check: ”. |
| 2 | **Check input shaft speed sensor circuit**<br>1) Disconnect TCM connectors with ignition switch OFF.<br>2) Check for proper connection to input shaft speed sensor at “E93-6” and “E93-16” terminals.<br>3) If OK, check resistance of sensor circuit.<br>**<u>Resistance of input shaft speed sensor circuit</u>**<br>**Between terminals “E93-6” and “E93-16” of disconnected harness side TCM connector: 560 – 680 Ω at 20 °C (68 °F)**<br>**Between terminals “E93-16” of disconnected harness side TCM connector and ground: No continuity**<br>*Are check results satisfactory?* | Go to Step 4. | Go to Step 3. |

www.cargeek.ir

| Step | Action | Yes | No |
|---|---|---|---|
| 3 | **Inspection input shaft speed sensor**<br>Inspect input shaft speed sensor referring to “Input Shaft Speed Sensor Inspection: ”.<br><br>*Is check result satisfactory?* | Input shaft speed sensor circuit is malfunction. | Go to Step 4. |
| 4 | **Check visually input shaft speed sensor and clutch drum using mirror for following**<br>• No damage<br>• No foreign material attached<br>• Correct installation<br> 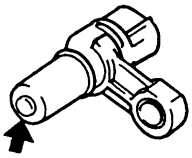 <br>I2RH01510023-01<br><br>*Are they in good condition?* | Intermittent trouble. Check for intermittent trouble referring to “Intermittent and Poor Connection Inspection: in Section 00”. | Clean, repair or replace. |

## DTC P0722 Output Speed Sensor Circuit No Signal

S5JB0A5104032

### Wiring Diagram

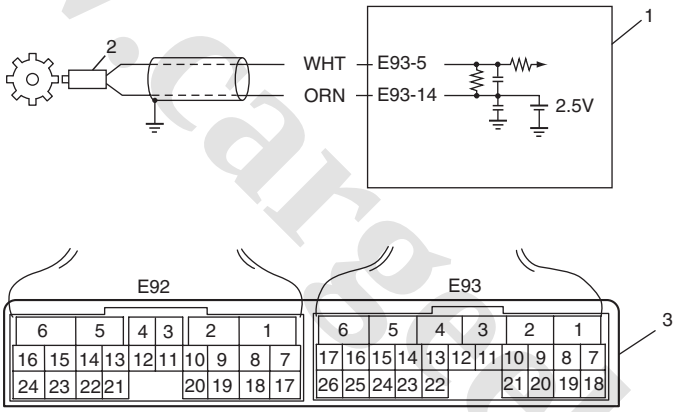


I5JB0A510023-01

| | |
|---|---|
| 1. TCM | 3. Terminal arrangement of TCM connector (viewed from harness side) |
| 2. Output shaft speed sensor | |

### DTC Detecting Condition and Trouble Area

| DTC Detecting Condition | Trouble Area |
|---|---|
| No pulse signal of output shaft speed sensor is inputted for 23 pulses period of input shaft speed sensor.<br>(1 driving cycle detection logic) | • Output shaft speed sensor or its circuit malfunction.<br>• Improper output shaft speed sensor installation.<br>• Damaged sensor rotor.<br>• Foreign material attachment to sensor or rotor.<br>• TCM |

### DTC Confirmation Procedure

1) Connect scan tool to DLC with ignition switch OFF.
2) Clear DTCs in TCM and ECM memories by using scan tool.
3) Start engine and shift select lever to “D” range.
4) Start vehicle and increase vehicle speed to about 40 km/h (25 mile/h) for 3 minutes or more.
5) Stop vehicle.
6) Check DTC, pending DTC and freeze-frame data.

www.cargeek.ir

 www.CarGeek.ir

### DTC Troubleshooting

| Step | Action | Yes | No |
|---|---|---|---|
| 1 | *Was "A/T System Check" performed?* | Go to Step 2. | Go to "A/T System Check: ". |
| 2 | **Check input shaft speed sensor circuit**<br>1) Disconnect TCM connectors with ignition switch OFF.<br>2) Check for proper connection to input shaft speed sensor at "E93-5" and "E93-14" terminals.<br>3) If OK, check resistance of sensor circuit.<br>**Resistance of input shaft speed sensor circuit**<br>**Between terminals "E93-5" and "E93-14" of disconnected harness side TCM connector: 560 – 680 Ω at 20 °C (68 °F)**<br>**Between terminals "E93-14" of disconnected harness side TCM connector and ground: No continuity**<br>*Are check results satisfactory?* | Go to Step 4. | Go to Step 3. |
| 3 | **Inspection output shaft speed sensor**<br>Inspect input shaft speed sensor referring to "Output Shaft Speed Sensor Inspection: ".<br>*Is check result satisfactory?* | Output shaft speed sensor circuit is malfunction. | Go to Step 4. |
| 4 | **Check visually Output shaft speed sensor and sensor rotor using mirror for following**<br>• No damage<br>• No foreign material attached<br>• Correct installation<br> 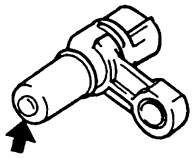 <br>I2RH01510023-01<br>*Are they in good condition?* | Intermittent trouble. Check for intermittent trouble referring to "Intermittent and Poor Connection Inspection: in Section 00". | Clean, repair or replace. |

## DTC P0741 / P0742 TCC Circuit Performance or Stuck OFF / TCC Circuit Stuck ON

S5JB0A5104033

### DTC Detecting Condition and Trouble Area

| DTC Detecting Condition | Trouble Area |
|---|---|
| **DTC P0741:**<br>When driving vehicle in "D" range, difference in revolution between engine and A/T input (input shaft speed) is lager than specification although TCM commanded TCC pressure control solenoid to turn ON. (2 driving cycle detection logic) | • Mechanical malfunction of TCC pressure control solenoid valve.<br>• Malfunction of valve body assembly.<br>• Fluid passage clogged or leaking.<br>• Torque converter clutch malfunction. |
| **DTC P0742:**<br>When driving vehicle in "D" range, difference in revolution between engine and A/T input (input shaft speed) is smaller than specification although TCM commanded TCC pressure control solenoid to turn OFF. (2 driving cycle detection logic) | |

www.cargeek.ir

### DTC Confirmation Procedure

**⚠ WARNING**

- **When performing a road test, select a place where there is no traffic or possibility of a traffic accident and be very careful during testing to avoid occurrence of an accident.**
- **Road test should be carried out with 2 persons, a driver and tester, on a level road.**

1) Connect scan tool to DLC with ignition switch OFF.
2) Clear DTCs in TCM and ECM memories by using scan tool.
3) Start engine and warm it up to normal operating temperature.
4) Shift select lever to “N” and “D” range for each 10 seconds.
5) Drive vehicle with 4th in “D” range and lock-up ON for 20 seconds or longer referring to “Automatic Gear Shift Table: ”.
6) Drive vehicle with 2nd or 3rd gear in “D” range, 15 – 20% throttle opening and at vehicle speed of 40 km/h (25 mile/h).
7) Stop vehicle and turn ignition switch OFF.
8) Repeat Step 3) to 6) one time.
9) Stop vehicle.
10) Check DTC, pending DTC and freeze-frame data.

### DTC Troubleshooting

| Step | Action | Yes | No |
|---|---|---|---|
| 1 | *Was “A/T System Check” performed?* | Go to Step 2. | Go to “A/T System Check: ”. |
| 2 | Check TCC pressure control solenoid valve for operation referring to “Solenoid Valves (Shift Solenoid-A, Shift Solenoid-B, TCC Pressure Control Solenoid and Pressure Control Solenoid Inspection: ”.<br>*Are they in good condition?* | Clean fluid passage or replace valve body assembly. | Replace TCC pressure control solenoid valve. |

## DTC P0751 / P0752 Shift Solenoid-A Performance or Stuck OFF / Shift Solenoid-A Stuck ON

S5JB0A5104034

### DTC Detecting Condition and Trouble Area

| DTC Detecting Condition | Trouble Area |
|---|---|
| **DTC P0751:**<br>When one of the following condition was detected while vehicle running at 5 km/h (3.1 mile/h) or more in “D” range after engine being warmed up.<br>• 4th gear ratio is detected although TCM command is for 1st gear (See table below *1)<br>Or<br>• 3rd gear ratio is detected although TCM command is for 2nd gear (See table below *2).<br>(2 driving cycle detection logic) | • Mechanical malfunction of shift solenoid valve–A.<br>• Malfunction of valve body assembly.<br>• Fluid passage clogged or leaking.<br>• Mechanical malfunction of automatic transmission (clutch, brake or gear etc). |
| **DTC P0752:**<br>2nd gear ratio is detected although TCM command is for 3rd gear while vehicle running at 5 km/h (3.1 mile/h) or more in “D” range after engine being warmed up.<br>(2 driving cycle detection logic) | |

### Table for detecting condition

| TCM output gear position | | 1st | 2nd | 3rd | 4th |
|---|---|---|---|---|---|
| Actual gear position | Stuck OFF (DTC P0751) | 4th *1 | 3rd *2 | 3rd | 4th |
| | Stuck ON (DTC P0752) | 1st | 2nd | 2nd | 4th |

www.cargeek.ir

 www.CarGeek.ir

### DTC Confirmation Procedure

**⚠ WARNING**

- **When performing a road test, select a place where there is no traffic or possibility of a traffic accident and be very careful during testing to avoid occurrence of an accident.**
- **Road test should be carried out with 2 persons, a driver and tester, on a level road.**

1) Connect scan tool to DLC with ignition switch OFF.
2) Clear DTCs in TCM and ECM memories by using scan tool.
3) Start engine and warm it up to normal operating temperature.
4) Shift select lever to “N” and “D” range for each 10 seconds.
5) Start vehicle and increase vehicle speed to 60 km/h (37 mile/h) with throttle position 40% or more.
6) Stop vehicle and turn ignition switch OFF.
7) Repeat Step 3) to 5) one time.
8) Stop vehicle.
9) Check DTC, pending DTC and freeze-frame data.

### DTC Troubleshooting

| Step | Action | Yes | No |
|---|---|---|---|
| 1 | *Was “A/T System Check” performed?* | Go to Step 2. | Go to “A/T System Check: ”. |
| 2 | Check shift solenoid valve–A for operation referring to “Solenoid Valves (Shift Solenoid-A, Shift Solenoid-B, TCC Pressure Control Solenoid and Pressure Control Solenoid Inspection: ”.<br><br>*Are they in good condition?* | Clean fluid passage or replace valve body assembly. | Replace shift solenoid valve–A. |

## DTC P0756 / P0757 Shift Solenoid-B Performance or Stuck OFF / Shift Solenoid-B Stuck ON

S5JB0A5104035

### DTC Detecting Condition and Trouble Area

| DTC Detecting Condition | Trouble Area |
|---|---|
| **DTC P0756:**<br>When one of the following condition was detected while vehicle running at 5 km/h (3.1 mile/h) or more in “D” range after engine being warmed up.<br>• 1st gear ratio is detected although TCM command is for 2nd gear (See table below *1)<br>Or<br>• 4th gear ratio is detected although TCM command is for 3rd gear (See table below *2)<br>(2 driving cycle detection logic) | • Mechanical malfunction of shift solenoid valve–B.<br>• Malfunction of valve body assembly.<br>• Fluid passage clogged or leaking.<br>• Mechanical malfunction of automatic transmission (clutch, brake or gear etc). |
| **DTC P0757:**<br>When one of the following condition was detected while vehicle running at 5 km/h (3.1 mile/h) or more in “D” range after engine being warmed up.<br>• 2nd gear ratio is detected although TCM command is for 1st gear (See table below *3).<br>Or<br>• 3rd gear ratio is detected although TCM command is for 4th gear (See table below *4).<br>(2 driving cycle detection logic) | |

www.cargeek.ir

**Table for detecting condition**

| TCM output gear position | | 1st | 2nd | 3rd | 4th |
|---|---|---|---|---|---|
| Actual gear position | Stuck OFF (DTC P0756) | 1st | 1st *1 | 4th *2 | 4th |
| | Stuck ON (DTC P0757) | 2nd *3 | 2nd | 3rd | 3rd *4 |

**DTC Confirmation Procedure**

**⚠ WARNING**

- **When performing a road test, select a place where there is no traffic or possibility of a traffic accident and be very careful during testing to avoid occurrence of an accident.**
- **Road test should be carried out with 2 persons, a driver and tester, on a level road.**

1) Connect scan tool to DLC with ignition switch OFF.
2) Clear DTCs in TCM and ECM memories by using scan tool.
3) Start engine and warm it up to normal operating temperature.
4) Shift select lever to “N” and “D” range for each 10 seconds.
5) Start vehicle and increase vehicle speed to 65 km/h (40 mile/h) with throttle position 10% or more.
6) Stop vehicle and turn ignition switch OFF.
7) Repeat Step 3) to 5) one time.
8) Stop vehicle.
9) Check DTC, pending DTC and freeze-frame data.

**DTC Troubleshooting**

| Step | Action | Yes | No |
|---|---|---|---|
| 1 | *Was “A/T System Check” performed?* | Go to Step 2. | Go to “A/T System Check: ”. |
| 2 | Check shift solenoid valve–B for operation referring to “Solenoid Valves (Shift Solenoid-A, Shift Solenoid-B, TCC Pressure Control Solenoid and Pressure Control Solenoid Inspection: ”.<br><br>*Are they in good condition?* | Clean fluid passage or replace valve body assembly. | Replace shift solenoid valve–B. |

## DTC P0962 Pressure Control Solenoid “A” Control Circuit Low

S5JB0A5104039

**Wiring Diagram**

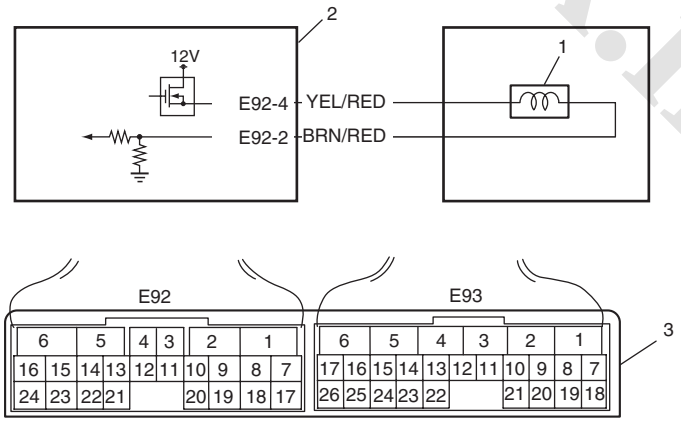


I5JB0A510024-01

| | | |
|---|---|---|
| 1. Pressure control solenoid valve | 2. TCM | 3. Terminal arrangement of TCM connector (viewed from harness side) |

www.cargeek.ir

 www.CarGeek.ir

**DTC Detecting Condition and Trouble Area**

| DTC Detecting Condition | Trouble Area |
|---|---|
| Pressure control solenoid valve output voltage is too low comparing with TCM command value.<br>(1 driving cycle detection logic) | • Pressure control solenoid valve circuit open or shorted to ground.<br>• Malfunction of pressure control solenoid valve.<br>• TCM |

**DTC Confirmation Procedure**

1) Connect scan tool to DLC with ignition switch OFF.
2) Clear DTCs in TCM and ECM memories by using scan tool.
3) Start engine.
4) Keep engine running at idle speed for 30 seconds or more.
5) Check DTC, pending DTC and freeze-frame data.

**DTC Troubleshooting**

| Step | Action | Yes | No |
|---|---|---|---|
| 1 | *Was "A/T System Check" performed?* | Go to Step 2. | Go to "A/T System Check: ". |
| 2 | **Check pressure control solenoid valve circuit for ground short**<br>1) Disconnect TCM connectors.<br>2) Check for proper connection to TCM at terminals "E92-2" and "E92-4".<br>3) If connection is OK, check continuity between terminal "E92-4" of disconnected harness side TCM connector and ground.<br>*Is continuity indicated?* | Pressure control solenoid valve circuit is shorted to ground. If circuit is OK, go to Step4. | Go to Step 4. |
| 3 | **Check pressure control solenoid valve circuit for open**<br>1) Check resistance between terminals "E92-2" and "E92-4" of disconnected harness side TCM connector.<br>*Is it infinity?* | Pressure control solenoid valve circuit is open circuit. If circuit is OK, go to Step4. | Go to Step 4. |
| 4 | **Inspection pressure control solenoid valve**<br>1) Inspection pressure control solenoid valve referring to "Solenoid Valves (Shift Solenoid-A, Shift Solenoid-B, TCC Pressure Control Solenoid and Pressure Control Solenoid Inspection: ".<br>*Is check results satisfactory?* | Intermittent trouble or faulty TCM. Check for intermittent trouble referring to "Intermittent and Poor Connection Inspection: in Section 00". If OK, substitute a known-good TCM and recheck. | Replace defective pressure control solenoid valve referring to "Solenoid Valves (Shift Solenoid-A, Shift Solenoid-B, TCC Pressure Control Solenoid and Pressure Control Solenoid Removal and Installation: ". |

## DTC P0963 Pressure Control Solenoid "A" Control Circuit High

S5JB0A5104040

**Wiring Diagram**

Refer to "DTC P0962 Pressure Control Solenoid "A" Control Circuit Low: ".

**DTC Detecting Condition and Trouble Area**

| DTC Detecting Condition | Trouble Area |
|---|---|
| Pressure control solenoid valve output voltage is too high comparing with TCM command value.<br>(1 driving cycle detection logic) | • Pressure control solenoid valve circuit shorted to power circuit.<br>• Pressure control solenoid valve malfunction.<br>• TCM |

www.cargeek.ir

### DTC Confirmation Procedure

1) Connect scan tool to DLC with ignition switch OFF.
2) Clear DTCs in TCM and ECM memories by using scan tool.
3) Start engine.
4) Keep engine running at idle speed for 10 seconds or more.
5) Check DTC, pending DTC and freeze-frame data.

### DTC Troubleshooting

| Step | Action | Yes | No |
|---|---|---|---|
| 1 | *Was "A/T System Check" performed?* | Go to Step 2. | Go to "A/T System Check: ". |
| 2 | **Check pressure control solenoid valve circuit for power supply short**<br>1) Disconnect TCM connectors.<br>2) Check for proper connection to TCM at terminal "E92-2" and "E92-4".<br>3) If connection is OK, turn ignition switch ON and measure voltage between terminal "E92-2" of disconnected harness side TCM connector and ground.<br>*Is it 0 – 2 V?* | Go to Step 3. | Pressure control solenoid valve circuit is shorted to power circuit. |
| 3 | **Inspection pressure control solenoid valve**<br>1) Inspection pressure control solenoid valve referring to "Solenoid Valves (Shift Solenoid-A, Shift Solenoid-B, TCC Pressure Control Solenoid and Pressure Control Solenoid Inspection: ".<br>*Is check results satisfactory?* | Intermittent trouble or faulty TCM. Check for intermittent trouble referring to "Intermittent and Poor Connection Inspection: in Section 00". If OK, substitute a known-good TCM and recheck. | Replace defective pressure control solenoid valve referring to "Solenoid Valves (Shift Solenoid-A, Shift Solenoid-B, TCC Pressure Control Solenoid and Pressure Control Solenoid Removal and Installation: ". |

## DTC P0973 / P0976 Shift Solenoid "A" Control Circuit Low / Shift Solenoid "B" Control Circuit Low

S5JB0A5104041

### Wiring Diagram

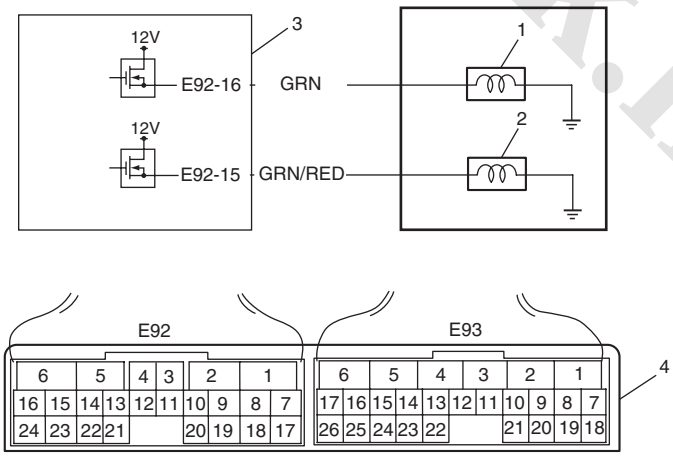


I5JB0A510025-01

| | |
|---|---|
| 1. Shift solenoid valve–A | 3. TCM |
| 2. Shift solenoid valve–B | 4. Terminal arrangement of TCM connector (viewed from harness side) |

www.cargeek.ir

 www.CarGeek.ir

**DTC Detecting Condition and Trouble Area**

| DTC Detecting Condition | Trouble Area |
|---|---|
| Voltage of shift solenoid valve TCM terminal is low although TCM is commanding shift solenoid to turn ON.<br>(1 driving cycle detection logic) | • Shift solenoid valve circuit shorted to ground.<br>• Malfunction of shift solenoid valve.<br>• TCM |

**DTC Confirmation Procedure**

**DTC P0973:**

1) Connect scan tool to DLC with ignition switch OFF.
2) Clear DTCs in TCM and ECM memories by using scan tool.
3) Start engine.
4) Shift select lever to “N” and “D” range for each 20 seconds.
5) Check DTC, pending DTC and freeze-frame data.

**DTC P0976:**

1) Connect scan tool to DLC with ignition switch OFF.
2) Clear DTCs in TCM and ECM memories by using scan tool.
3) Start engine.
4) Shift select lever to “N” and “D” range for each 10 seconds.
5) Start vehicle and increase vehicle speed to 20 km/h (12.5 mile/h) with throttle position 10% or less.
6) Stop vehicle.
7) Check DTC, pending DTC and freeze-frame data.

**DTC Troubleshooting**

| Step | Action | Yes | No |
|---|---|---|---|
| 1 | *Was “A/T System Check” performed?* | Go to Step 2. | Go to “A/T System Check: ”. |
| 2 | **Check shift solenoid valve circuit for ground short**<br>1) Disconnect TCM connectors.<br>2) Check for proper connection to TCM at terminals “E92-16” (for shift solenoid valve–A), “E92-15” (for shift solenoid valve–B).<br>3) If connection is OK, measure resistance between terminal “E92-16” (for shift solenoid valve–A), “E92-15” (for shift solenoid valve–B) of disconnected harness side TCM connector and ground.<br>*Is it less than 11 Ω?* | DTC P0973: Shift solenoid valve-A circuit is shorted to ground.<br>DTC P0976: Shift solenoid valve-B circuit is shorted to ground.<br>If circuit is OK, go to Step 3. | Go to Step 3. |
| 3 | **Inspection solenoid valve**<br>1) Inspection pressure control solenoid valve referring to “Solenoid Valves (Shift Solenoid-A, Shift Solenoid-B, TCC Pressure Control Solenoid and Pressure Control Solenoid Inspection: ”.<br>*Is check results satisfactory?* | Intermittent trouble or faulty TCM. Check for intermittent trouble referring to “Intermittent and Poor Connection Inspection: in Section 00”, If OK, substitute a known-good TCM and recheck. | Replace defective solenoid valve referring to “Solenoid Valves (Shift Solenoid-A, Shift Solenoid-B, TCC Pressure Control Solenoid and Pressure Control Solenoid Removal and Installation: ”. |

www.cargeek.ir

## DTC P0974 / P0977 Shift Solenoid “A” Control Circuit High / Shift Solenoid “B” Control Circuit High

S5JB0A5104042

### Wiring Diagram

Refer to “DTC P0973 / P0976 Shift Solenoid “A” Control Circuit Low / Shift Solenoid “B” Control Circuit Low: ”.

### DTC Detecting Condition and Trouble Area

| DTC Detecting Condition | Trouble Area |
|---|---|
| Voltage of shift solenoid valve TCM terminal is high although TCM is commanding shift solenoid to turn OFF.<br>(1 driving cycle detection logic) | • Shift solenoid valve circuit open or shorted to power circuit.<br>• Malfunction of shift solenoid valve.<br>• TCM |

### DTC Confirmation Procedure

**⚠ WARNING**

- **When performing a road test, select a place where there is no traffic or possibility of a traffic accident and be very careful during testing to avoid occurrence of an accident.**
- **Road test should be carried out with 2 persons, a driver and tester, on a level road.**

1) Connect scan tool to DLC with ignition switch OFF.
2) Clear DTCs in TCM and ECM memories by using scan tool.
3) Start engine and shift select lever to “D” range.
4) Start vehicle and increase vehicle speed to 60 km/h (37 mile/h) in “D” range.
5) Keep on driving in the speed for 20 seconds and decrease vehicle speed gradually.
6) Stop vehicle.
7) Check DTC, pending DTC and freeze-frame data.

### DTC Troubleshooting

| Step | Action | Yes | No |
|---|---|---|---|
| 1 | *Was “A/T System Check” performed?* | Go to Step 2. | Go to “A/T System Check: ”. |
| 2 | **Check shift solenoid valve circuit for power supply short**<br>1) Disconnect TCM connectors.<br>2) Check for proper connection to TCM at terminal “E92-16” (for shift solenoid valve–A), “E92-15” (for shift solenoid valve–B).<br>3) If connection is OK, turn ignition switch ON and measure voltage between terminal “E92-16” (for shift solenoid valve–A), “E92-15” (for shift solenoid valve–B) of disconnected harness side TCM connector and ground.<br>*Is it 0 – 2 V?* | Go to Step 3. | DTC P0974: Shift solenoid valve-A circuit is shorted to power supply circuit.<br>DTC P0977: Shift solenoid valve-B circuit is shorted to power supply circuit. |
| 3 | **Check solenoid valve circuit for open**<br>1) Check continuity between terminal “E92-16” (for solenoid valve-A) or “E92-15” (for solenoid valve-B) of disconnected harness side TCM connector and ground.<br>*Is it infinity?* | • DTC P0974: Solenoid valve-A circuit is open circuit.<br>• DTC P0977: Solenoid valve-B circuit is open circuit.<br>• If circuit is OK, go to step 4. | Go to Step 4. |

www.cargeek.ir

 www.CarGeek.ir

| Step | Action | Yes | No |
|---|---|---|---|
| 4 | **Inspection solenoid valve**<br>1) Inspection solenoid valve referring to “Solenoid Valves (Shift Solenoid-A, Shift Solenoid-B, TCC Pressure Control Solenoid and Pressure Control Solenoid Inspection: ”.<br>*Is check results satisfactory?* | Intermittent trouble or faulty TCM. Check for intermittent trouble referring to “Intermittent and Poor Connection Inspection: in Section 00”. If OK, substitute a known-good TCM and recheck. | Replace defective solenoid valve referring to “Solenoid Valves (Shift Solenoid-A, Shift Solenoid-B, TCC Pressure Control Solenoid and Pressure Control Solenoid Removal and Installation: ”. |

## DTC P1702 Internal Control Module Memory Check Sum Error

S5JB0A5104044

### DTC Detecting Condition and Trouble Area

| DTC Detecting Condition | Trouble Area |
|---|---|
| An internal TCM fault is detected by TCM<br>(1 driving cycle detection logic) | TCM |

**NOTE**

**DTC P1702 can never be cleared once it has been set.**

1) Ignition switch OFF.
2) Replace TCM.
3) Repeat “A/T System Check: ”.

## DTC P1703 CAN Invalid Data - TCM

S5JB0A5104045

### DTC Detecting Condition and Trouble Area

| DTC Detecting Condition | Trouble Area |
|---|---|
| When abnormality on the gear shift control signal from ECM is detected by TCM, TCM sets DTC P1703.<br>(1 driving cycle detection logic) | • Engine control system<br>• TCM<br>• ECM |

### DTC Troubleshooting

| Step | Action | Yes | No |
|---|---|---|---|
| 1 | *Was “A/T System Check” performed?* | Go to Step 2. | Go to “A/T System Check: ”. |
| 2 | **DTC Check**<br>Check DTC of ECM referring to “DTC Check: in Section 1A”.<br>*Is there any DTC(s)?* | Go to applicable DTC troubleshooting. | Substitute a known-good TCM and recheck. |

www.cargeek.ir

## DTC P1723 Range Select Switch Malfunction

S5JB0A5104056

### Wiring Diagram

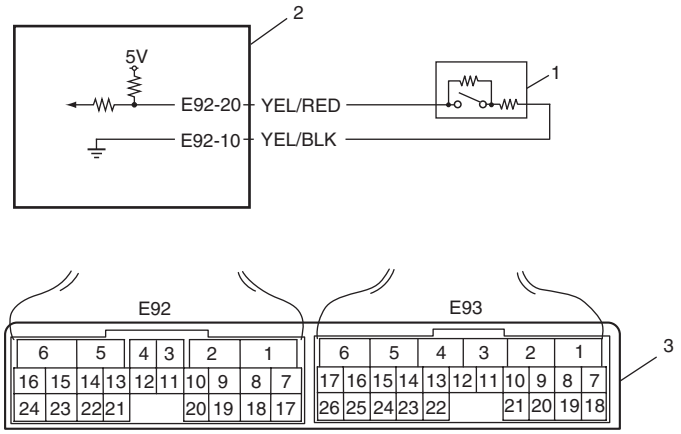


I5JB0A510001-01

| | |
|---|---|
| 1. "3" position switch | 3. Terminal arrangement of TCM connector (viewed from harness side) |
| 2. TCM | |

### DTC Detecting Condition and Trouble Area

| DTC Detecting Condition | Trouble Area |
|---|---|
| "3" position switch signal is inputted out of specified value.<br>(1 driving cycle detection logic) | • "3" position switch or its circuit malfunction<br>• TCM |

### DTC Confirmation Procedure

1) Connect scan tool to DLC with ignition switch OFF.
2) Clear DTCs in TCM and ECM memories by using scan tool.
3) Start engine and run it for 20 sec. or more.
4) Check DTC, pending DTC and freeze-frame data.

### DTC Troubleshooting

| Step | Action | Yes | No |
|---|---|---|---|
| 1 | *Was "A/T System Check" performed?* | Go to Step 2. | Go to "A/T System Check: ". |
| 2 | **Check "3" position switch circuit**<br>1) Disconnect TCM connector with ignition switch OFF.<br>2) Check for proper connection to "3" position switch at "E92-10" and "E92-20" terminals.<br>3) If OK, check resistance of switch circuit between terminals "E92-10" and "E92-20" of disconnected harness side TCM connector.<br>**"3" position switch circuit**<br>**Shift selector lever to "P", "N" or "D" range: 3.96 – 4.04 kΩ**<br>**Shift selector lever to "R", "3", "2" or "L" range: 0.99 – 1.01 kΩ**<br>*Is result as specified?* | Intermittent trouble or faulty TCM. Check for intermittent trouble referring to "Intermittent and Poor Connection Inspection: in Section 00". If OK, substitute a known-good TCM and recheck. | Go to Step 3. |
| 3 | **Check "3" position switch**<br>Check "3" position switch referring to ""3" Position Switch Inspection: ".<br>*Is result as specified?* | Replace "3" position switch. | "3" position switch circuit is malfunction. |

www.cargeek.ir

 www.CarGeek.ir

## DTC P1774: CAN Communication Bus Off

S5JB0A5104057

### Wiring Diagram

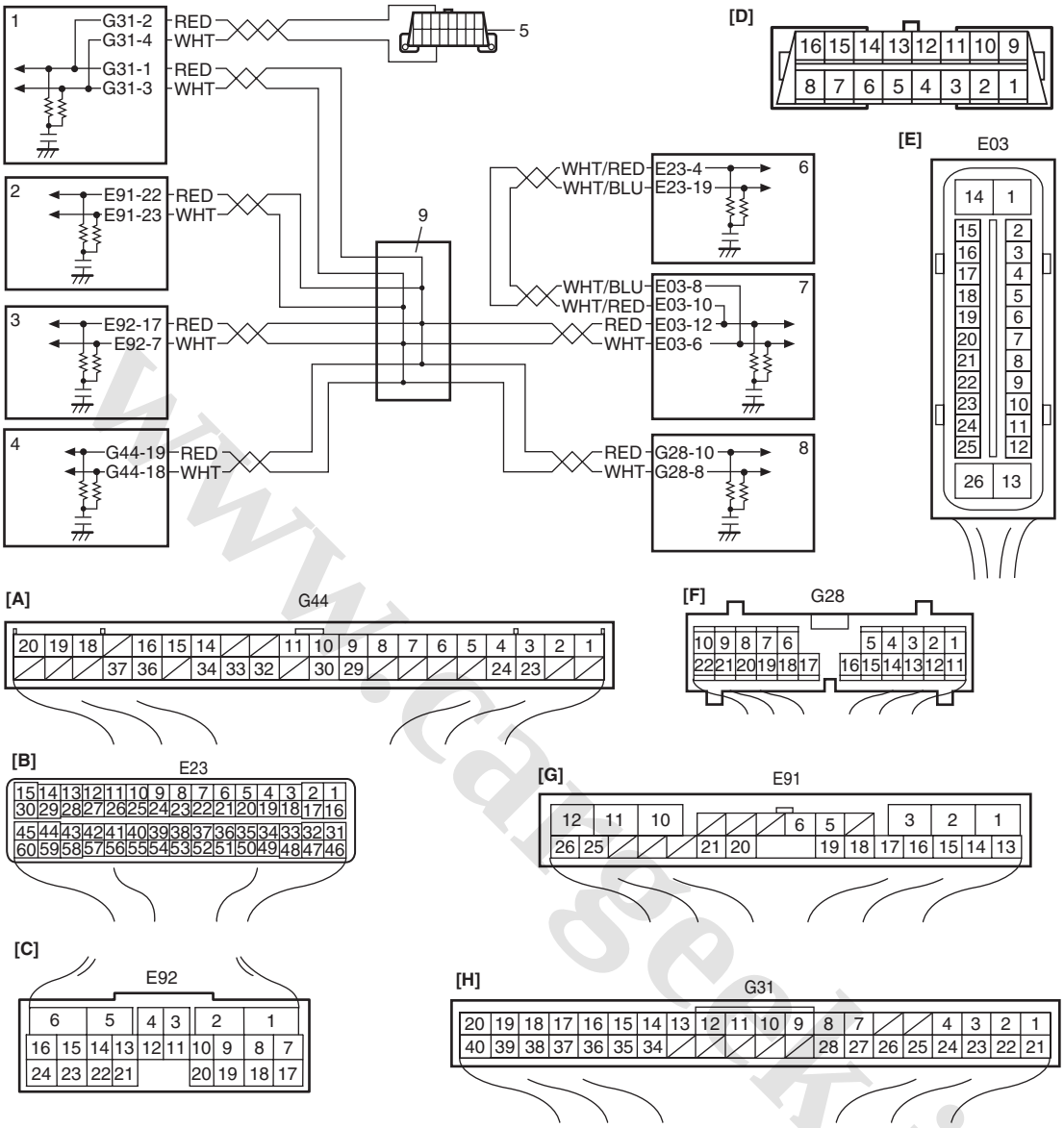


I5JB0A510002-01

| | | | |
|---|---|---|---|
| [A]: Keyless start control module connector (if equipped) (viewed from harness side) | [F]: Combination meter connector (viewed from harness side) | 3. TCM | 8. Combination meter |
| [B]: ECM connector (viewed from harness side) | [G]: 4WD control module connector (viewed from harness side) | 4. Keyless start control module (if equipped) | 9. Junction connector |
| [C]: TCM connector (viewed from harness side) | [H]: BCM connector (viewed from harness side) | 5. DLC | |
| [D]: DLC (viewed from harness side) | 1. BCM | 6. ECM | |
| [E]: ABS hydraulic unit / control module connector (viewed from harness side) | 2. 4WD control module | 7. ABS hydraulic unit / control module | |

www.cargeek.ir

**DTC Detecting Condition and Trouble Area**

| DTC Detecting Condition | Trouble Area |
|---|---|
| Transmission error that is inconsistent between transmission data and transmission monitor (CAN bus monitor) data is detected more than 7 times continuously.<br>(1 driving cycle detection logic) | • ECM<br>• TCM<br>• Combination meter<br>• BCM<br>• ABS hydraulic unit / control module<br>• 4WD control module<br>• Keyless start control module (if equipped)<br>• CAN communication line circuit |

**DTC Confirmation Procedure**

1) Connect scan tool to DLC with ignition switch turned OFF.
2) Turn ON ignition switch and clear DTC by using scan tool.
3) Start engine and run it for 1 min. or more.
4) Check DTC and pending DTC.

**DTC Troubleshooting**

**NOTE**

**Upon completion of inspection and repair work, perform "DTC Confirmation Procedure: " and confirm that the trouble has been corrected.**

| Step | Action | Yes | No |
|---|---|---|---|
| 1 | *Was "A/T System Check" performed?* | Go to Step 2. | Go to "A/T System Check: ". |
| 2 | **Control module connector check**<br>1) Check connection of connectors of all control modules communicating by means of CAN.<br>2) Recheck DTC in TCM referring to "DTC Check: ".<br>*Is there DTC P1774?* | Go to Step 3. | Intermittent trouble. Check for intermittent referring to "Intermittent and Poor Connection Inspection: in Section 00". |
| 3 | **CAN communication circuit check**<br>1) Turn ignition switch to OFF position.<br>2) Disconnect connectors of all control modules communicating by means of CAN.<br>3) Check CAN communication circuit between control modules for open, short and high resistance.<br>*Is each CAN communication circuit in good condition?* | Go to Step 4. | Repair circuit. |
| 4 | **DTC check**<br>1) Turn ignition switch to OFF position.<br>2) Disconnect each connector.<br>ECM<br>ABS hydraulic unit / control module<br>BCM<br>4WD control module<br>Keyless start control module (if equipped)<br>Combination meter<br>3) Recheck DTC in TCM referring to "DTC Check: ".<br>*Is there DTC P1774?* | Check TCM power and ground circuit. If circuit is OK, substitute a known-good TCM and recheck. | Check applicable control module power and ground circuit. If circuit is OK, substitute a known-good applicable control module and recheck. |

www.cargeek.ir

 www.CarGeek.ir

## DTC P1777: TCM Lost Communication with ECM (Reception Error)

S5JB0A5104058

### Wiring Diagram

Refer to “DTC P1774: CAN Communication Bus Off: ”.

### DTC Detecting Condition and Trouble Area

| DTC Detecting Condition | Trouble Area |
|---|---|
| Reception error of communication data for ECM is detected for longer than specified time continuously.<br>(1 driving cycle detection logic) | • ECM<br>• ABS hydraulic unit / control module<br>• TCM<br>• CAN communication line circuit |

### DTC Confirmation Procedure

1) Connect scan tool to DLC with ignition switch turned OFF.
2) Turn ON ignition switch and clear DTC by using scan tool.
3) Start engine and run it for 1 min. or more.
4) Check DTC and pending DTC.

### DTC Troubleshooting

**NOTE**

**Upon completion of inspection and repair work, perform “DTC Confirmation Procedure: ” and confirm that the trouble has been corrected.**

| Step | Action | Yes | No |
|---|---|---|---|
| 1 | *Was “A/T System Check” performed?* | Go to Step 2. | Go to “A/T System Check: ”. |
| 2 | **Control module connector check**<br>1) Check connection of connectors of all control modules communicating by means of CAN.<br>2) Recheck DTC in TCM referring to “DTC Check: ”.<br>*Is there DTC P1777?* | Go to Step 3. | Intermittent trouble. Check for intermittent referring to “Intermittent and Poor Connection Inspection: in Section 00”. |
| 3 | **DTC check in ABS hydraulic unit / control module**<br>1) Check DTC in ABS hydraulic unit / control module.<br>*Is there DTC U1100?* | Go to Step 4. | Go to Step 5. |
| 4 | **DTC check**<br>1) Check DTC in ECM referring to “DTC Check: in Section 1A”.<br>*Is there DTC P1674?* | Go to “DTC P1674: CAN Communication (Bus Off Error): in Section 1A”. | Check ECM power and ground circuit. If circuit is OK, CAN communication circuit between ECM and ABS hydraulic unit / control module is open circuit. |
| 5 | **CAN communication circuit check**<br>1) Turn ignition switch to OFF position.<br>2) Disconnect connectors of all control modules communicating by means of CAN.<br>3) Check CAN communication circuit between control modules for open, short and high resistance.<br>*Is each CAN communication circuit in good condition?* | Check TCM power and ground circuit. If circuit is OK, substitute a known-good TCM and recheck. | Repair circuit. |

www.cargeek.ir

## DTC P1778: TCM Lost Communication with BCM (Reception Error)

S5JB0A5104059

### Wiring Diagram

Refer to “DTC P1774: CAN Communication Bus Off: ”.

### DTC Detecting Condition and Trouble Area

| DTC Detecting Condition | Trouble Area |
|---|---|
| Reception error of communication data for BCM is detected for longer than specified time continuously.<br>(1 driving cycle detection logic) | • BCM<br>• TCM<br>• CAN communication line circuit |

### DTC Confirmation Procedure

1) Connect scan tool to DLC with ignition switch turned OFF.
2) Turn ON ignition switch and clear DTC by using scan tool.
3) Start engine and run it for 1 min. or more.
4) Check DTC and pending DTC.

### DTC Troubleshooting

**NOTE**

**Upon completion of inspection and repair work, perform “DTC Confirmation Procedure: ”“DTC Confirmation Procedure” and confirm that the trouble has been corrected.**

| Step | Action | Yes | No |
|---|---|---|---|
| 1 | *Was “A/T System Check” performed?* | Go to Step 2. | Go to “A/T System Check: ”. |
| 2 | **Control module connector check**<br>1) Check connection of connectors of all control modules communicating by means of CAN.<br>2) Recheck DTC in TCM referring to “DTC Check: ”.<br>*Is there DTC P1778?* | Go to Step 3. | Intermittent trouble. Check for intermittent referring to “Intermittent and Poor Connection Inspection: in Section 00”. |
| 3 | **DTC check in BCM (bus off)**<br>1) Check DTC in BCM referring to “DTC Check: in Section 10B”.<br>*Is there DTC U1073?* | Go to “DTC U1073 (No. 1073): Control Module Communication Bus Off: in Section 10B”. | Go to Step 4. |
| 4 | **DTC check**<br>1) Check DTC in ECM referring to “DTC Check: in Section 1A”.<br>*Is there DTC P1678?* | Check BCM power and ground circuit. If circuit is OK, substitute a known-good BCM and recheck. | Go to Step 5. |
| 5 | **CAN communication circuit check**<br>1) Turn ignition switch to OFF position.<br>2) Disconnect connectors of all control modules communicating by means of CAN.<br>3) Check CAN communication circuit between control modules for open, short and high resistance.<br>*Is each CAN communication circuit in good condition?* | Check TCM power and ground circuit. If circuit is OK, substitute a known-good TCM and recheck. | Repair circuit. |

www.cargeek.ir

 www.CarGeek.ir

## DTC P1874 4L Switch Circuit Malfunction (Short)

S5JB0A5104047

### Wiring Diagram

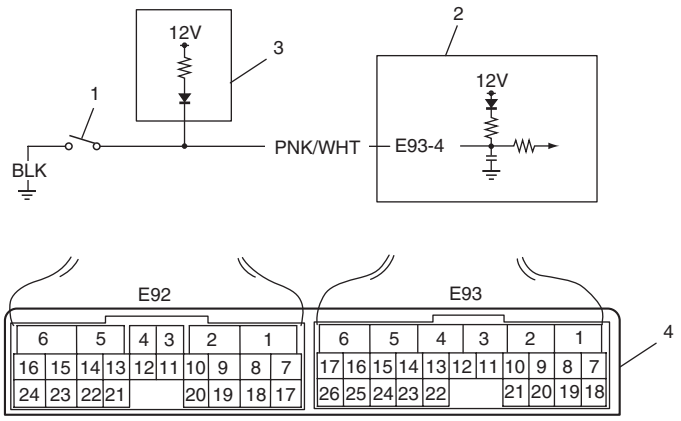


I5JB0A510026-01

| | |
|---|---|
| 1. 4L/N switch | 3. 4WD control module |
| 2. TCM | 4. Terminal arrangement of TCM connector (viewed from harness side) |

### DTC Detecting Condition and Trouble Area

| DTC Detecting Condition | Trouble Area |
|---|---|
| Actual transfer position is 4H although TCM detected 4L/N switch is turned ON with vehicle speed between 29 km/h (18 mile/h) and 88 km/h (55 mile/h).<br>(1 driving cycle detection logic) | • 4L/N switch or its circuit.<br>• TCM |

### DTC Confirmation Procedure

1) Connect scan tool to DLC with ignition switch OFF.
2) Clear DTCs in TCM and ECM memories by using scan tool.
3) Start engine and transfer position switch to “4H” position.
4) Keep engine running at idle speed for 10 seconds or more with select lever “D” range.
5) Start vehicle and increase vehicle speed to about 60 km/h (37 mile/h) for 2 minutes.
6) Stop vehicle.
7) Check DTC, pending DTC and freeze frame data.

### DTC Troubleshooting

| Step | Action | Yes | No |
|---|---|---|---|
| 1 | **Vehicle speed signal check**<br>1) Check DTC in ECM and ABS hydraulic unit / control module referring to “DTC Check: in Section 1A” or “DTC Check: in Section 4E”.<br>*Is there DTC P P0500: Vehicle speed sensor (VSS) malfunction in ECM and/or DTC C1021, C1022, C1025, C1026, C1031, C1032, C1035 and/or C1036 in ABS hydraulic unit / control module?* | Go to applicable DTC diag. flow. | Go to Step 2. |
| 2 | *Was “A/T System Check” performed?* | Go to Step 2. | Go to “A/T System Check: ”. |
| 3 | *Do you have SUZUKI scan tool?* | Go to Step 4. | Go to Step 5. |

www.cargeek.ir

| Step | Action | Yes | No |
|---|---|---|---|
| 4 | **4L switch and its circuit check**<br>1) Connect SUZUKI scan tool to DLC with ignition switch OFF.<br>2) Turn ignition switch ON.<br>3) Select “DATA LIST” mode on scan tool.<br>4) Check 4L/N switch signal (ON or OFF) on display when turning transfer position switch to each position.<br>**4L/N switch specifications (scan tool)**<br>**“4H” position: OFF**<br>**“4L” position: ON**<br>*Is OFF / ON displayed as described above?* | Intermittent trouble or faulty TCM. Check for intermittent trouble referring to “Intermittent and Poor Connection Inspection: in Section 00”. If OK, substitute a known-good TCM and recheck. | Go to Step 6. |
| 5 | **4L/N switch and its circuit check**<br>1) Turn ignition switch ON.<br>2) Check terminal voltage “E93-4” of TCM connector connected when turning transfer position switch to each position.<br>**4L/N switch specifications**<br>**“4H” position: 10 – 14 V**<br>**“4L” position: 0 – 1 V**<br>*Is voltage as specified?* | Intermittent trouble or faulty TCM. Check for intermittent trouble referring to “Intermittent and Poor Connection Inspection: in Section 00”. If OK, substitute a known-good TCM and recheck. | Go to Step 6. |
| 6 | **4L/N switch check**<br>1) Check 4WD low switch for operation referring to “Transfer Assembly Inspection: Motor-Shift Type (Transfer with Shift Actuator) in Section 3C”.<br>*Is check result satisfactory?* | 4L/N circuit is shorted to ground. If wire and connections are OK, substitute a known-good TCM and recheck. | Replace 4L/N switch. |

## DTC P1875 4L Switch Circuit Malfunction (Open)

S5JB0A5104048

### Wiring Diagram

Refer to “DTC P1874 4L Switch Circuit Malfunction (Short): ”.

### DTC Detecting Condition and Trouble Area

| DTC Detecting Condition | Trouble Area |
|---|---|
| Actual transfer position is 4L although TCM detected low switch is turned OFF with vehicle speed between 29 km/h (18 mile/h) and 88 km/h (55 mile/h).<br>(1 driving cycle detection logic) | • 4L/N switch or its circuit.<br>• TCM |

### DTC Confirmation Procedure

1) Connect scan tool to DLC with ignition switch OFF.
2) Clear DTCs in TCM and ECM memories by using scan tool.
3) Start engine and transfer position switch to “4L” position.
4) Keep engine running at idle speed for 10 seconds or more with select lever “D” range.
5) Start vehicle and increase vehicle speed to about 50 km/h (31 mile/h) in “4L” position for 2 minutes.
6) Stop vehicle.
7) Check DTC, pending DTC and freeze-frame data.

www.cargeek.ir

 www.CarGeek.ir

**DTC Troubleshooting**

| Step | Action | Yes | No |
|---|---|---|---|
| 1 | **Vehicle speed signal check**<br>1) Check DTC in ECM and ABS hydraulic unit / control module referring to “DTC Check: in Section 1A” or “DTC Check: in Section 4E”.<br>*Is there DTC P P0500: Vehicle speed sensor (VSS) malfunction in ECM and/or DTC C1021, C1022, C1025, C1026, C1031, C1032, C1035 and/or C1036 in ABS hydraulic unit / control module?* | Go to applicable DTC diag. flow. | Go to Step 2. |
| 2 | *Was “A/T System Check” performed?* | Go to Step 3. | Go to “A/T System Check: ”. |
| 3 | *Do you have SUZUKI scan tool?* | Go to Step 4. | Go to Step 5. |
| 4 | **4L switch and its circuit check**<br>1) Connect SUZUKI scan tool to DLC with ignition switch OFF.<br>2) Turn ignition switch ON.<br>3) Select “DATA LIST” mode on scan tool.<br>4) Check 4L/N switch signal (ON or OFF) on display when turning transfer position switch to each position.<br>**4L/N switch specifications**<br>**“4H” position: OFF**<br>**“4L” position: ON**<br>*Is OFF / ON displayed as described above?* | Intermittent trouble or faulty TCM. Check for intermittent trouble referring to “Intermittent and Poor Connection Inspection: in Section 00”. If OK, substitute a known-good TCM and recheck. | Go to Step 6. |
| 5 | **4L/N switch and its circuit check**<br>1) Turn ignition switch ON.<br>2) Check terminal voltage “E93-4” of TCM connector connected when turning transfer position switch to each position.<br>**4L/N switch specifications**<br>**“4H” position: 10 – 14 V**<br>**“4L” position: 0 – 1 V**<br>*Is voltage as specified?* | Intermittent trouble or faulty TCM. Check for intermittent trouble referring to “Intermittent and Poor Connection Inspection: in Section 00”. If OK, substitute a known-good TCM and recheck. | Go to Step 6. |
| 6 | **4L/N switch check**<br>1) Check 4L/N switch for operation referring to “Transfer Assembly Inspection: Motor-Shift Type (Transfer with Shift Actuator) in Section 3C”.<br>*Is check result satisfactory?* | 4L/N switch circuit open. If wire and connections are OK, substitute a known-good TCM and recheck. | Replace 4L/N switch. |

www.cargeek.ir

## DTC P1878 Torque Converter Clutch Shudder

S5JB0A5104060

### DTC Detecting Condition and Trouble Area

| DTC Detecting Condition | Trouble Area |
|---|---|
| The acceleration slip control function stops when the variation in the output revolution speed of the specified amplitude and specified cycle is detected within a specified period of time. When the specified variation is not detected after the acceleration slip control stops.<br>(20 driving cycle detection logic) | • Mismatching ATF<br>• Torque converter clutch malfunction<br>• TCM |

### DTC Confirmation Procedure

1) Connect scan tool to DLC with ignition switch OFF.
2) Clear DTCs in TCM and ECM memories by using scan tool.
3) Start engine and warm it up to normal operating temperature.
4) Drive vehicle with 3rd or 4th gear in “D” range and slip controlled lock-up ON for 20 seconds or longer referring to “Automatic Gear Shift Table: ”.
5) Stop vehicle.
6) Check DTC, pending DTC and freeze-frame data.

### DTC Troubleshooting

| Step | Action | Yes | No |
|---|---|---|---|
| 1 | *Was “A/T System Check” performed?* | Go to Step 2. | Go to “A/T System Check: ”. |
| 2 | 1) Change A/T fluid referring to “A/T Fluid Change: ”.<br>2) Check DTC after performing “DTC Confirmation Procedure: ”.<br>*Is DTC P1878 still indicated?* | Faulty torque converter clutch. Replace torque converter. | System is in good condition. |

## DTC P2763 Torque Converter Clutch (TCC) Circuit High

S5JB0A5104051

### Wiring Diagram

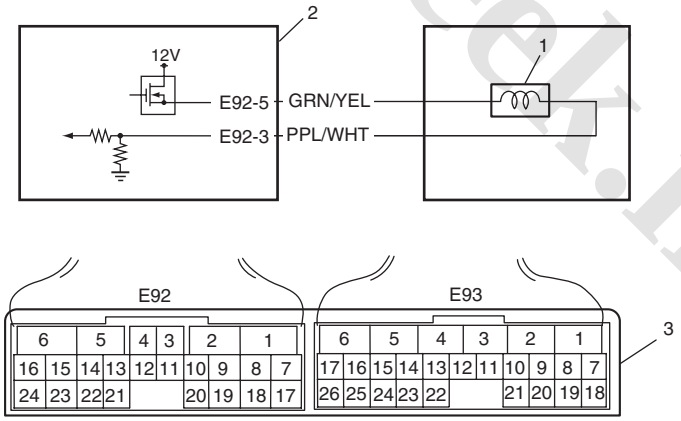


I5JB0A510027-01

| | |
|---|---|
| 1. TCC pressure control solenoid valve | 3. Terminal arrangement of TCM connector (viewed from harness side) |
| 2. TCM | |

www.cargeek.ir

 www.CarGeek.ir

**DTC Detecting Condition and Trouble Area**

| DTC Detecting Condition | Trouble Area |
|---|---|
| Voltage of TCC pressure control solenoid valve TCM terminal is high although TCM is commanding TCC pressure control solenoid to turn OFF.<br>(1 driving cycle detection logic) | • TCC pressure control solenoid valve circuit shorted to power circuit.<br>• Malfunction of TCC pressure control solenoid valve.<br>• TCM |

**DTC Confirmation Procedure**

**⚠ WARNING**

- **When performing a road test, select a place where there is no traffic or possibility of a traffic accident and be very careful during testing to avoid occurrence of an accident.**
- **Road test should be carried out with 2 persons, a driver and tester, on a level road.**

1) Connect scan tool to DLC with ignition switch OFF.
2) Clear DTCs in TCM and ECM memories by using scan tool.
3) Start engine.
4) Keep engine running at idle speed in “P” range for 10 seconds or more.
5) Check DTC, pending DTC and freeze-frame data.

**DTC Troubleshooting**

| Step | Action | Yes | No |
|---|---|---|---|
| 1 | *Was “A/T System Check” performed?* | Go to Step 2. | Go to “A/T System Check: ”. |
| 2 | **Check TCC pressure control solenoid valve circuit for power supply short**<br>1) Disconnect TCM connectors.<br>2) Check for proper connection to TCM at terminal “E92-3” and “E92-5”.<br>3) If connection is OK, turn ignition switch ON and measure voltage between terminal “E92-3” of disconnected harness side TCM connector and ground.<br>*Is it 0 – 2 V?* | Go to Step 3. | TCC pressure control solenoid valve circuit is shorted to power supply circuit. If circuit is OK, go to Step 3. |
| 3 | **Inspection TCC pressure control solenoid valve**<br>1) Inspection TCC pressure control solenoid valve referring to “Solenoid Valves (Shift Solenoid-A, Shift Solenoid-B, TCC Pressure Control Solenoid and Pressure Control Solenoid Inspection: ”.<br>*Is check results satisfactory?* | Intermittent trouble or faulty TCM. Check for intermittent trouble referring to “Intermittent and Poor Connection Inspection: in Section 00”. If OK, substitute a known-good TCM and recheck. | Replace TCC pressure control solenoid valve referring to “Transmission Fluid Temperature Sensor Removal and Installation: ”. |

www.cargeek.ir

## DTC P2764 Torque Converter Clutch (TCC) Circuit Low

S5JB0A5104052

### Wiring Diagram

Refer to “DTC P2763 Torque Converter Clutch (TCC) Circuit High: ”.

### DTC Detecting Condition and Trouble Area

| DTC Detecting Condition | Trouble Area |
|---|---|
| Voltage of TCC pressure control solenoid valve TCM terminal is low although TCM is commanding TCC pressurie control solenoid to turn ON.<br>(1 driving cycle detection logic) | • TCC pressure control solenoid valve circuit open or shorted to ground.<br>• Malfunction of TCC pressure control solenoid valve<br>• TCM |

### DTC Confirmation Procedure

**⚠ WARNING**

- **When performing a road test, select a place where there is no traffic or possibility of a traffic accident and be very careful during testing to avoid occurrence of an accident.**
- **Road test should be carried out with 2 persons, a driver and tester, on a level road.**

1) Connect scan tool to DLC with ignition switch OFF.
2) Clear DTCs in TCM and ECM memories by using scan tool.
3) Start engine.
4) Keep engine running at idle speed in “P” range for 20 seconds or more.
5) Check DTC, pending DTC and freeze-frame data.

### DTC Troubleshooting

| Step | Action | Yes | No |
|---|---|---|---|
| 1 | *Was “A/T System Check” performed?* | Go to Step 2. | Go to “A/T System Check: ”. |
| 2 | **Check TCC pressure control solenoid valve circuit for ground short**<br>1) Disconnect TCM connectors.<br>2) Check for proper connection to TCM at terminals “E92-3” and “E92-5”.<br>3) If connection is OK, check continuity between terminal “E92-5” of disconnected harness side TCM connector and ground.<br>*Is continuity indicated?* | TCC pressure control solenoid valve circuit is shorted to ground. If circuit is OK, go to Step 4. | Go to Step 4. |
| 3 | **Check TCC pressure control solenoid valve circuit for open**<br>1) Check resistance between terminal “E92-3” and “E92-5” of disconnected harness side TCM connector.<br>*Is it infinity?* | TCC pressure control solenoid valve circuit is open. If circuit is OK, go to Step 4. | Go to Step 4. |
| 4 | **Inspection TCC pressure control solenoid valve**<br>1) Inspection TCC pressure control solenoid valve referring to “Solenoid Valves (Shift Solenoid-A, Shift Solenoid-B, TCC Pressure Control Solenoid and Pressure Control Solenoid Inspection: ”.<br>*Is check results satisfactory?* | Intermittent trouble or faulty TCM. Check for intermittent trouble referring to “Intermittent and Poor Connection Inspection: in Section 00”. If OK, substitute a known-good TCM and recheck. | Replace TCC pressure control solenoid valve referring to “Solenoid Valves (Shift Solenoid-A, Shift Solenoid-B, TCC Pressure Control Solenoid and Pressure Control Solenoid Removal and Installation: ”. |

www.cargeek.ir

 www.CarGeek.ir

## Inspection of TCM and Its Circuits

S5JB0A5104061

TCM and its circuits can be checked at TCM wiring connectors by measuring voltage, pulse signal and resistance.

**⚠ CAUTION**

**TCM cannot be checked by itself, it is strictly prohibited to connect voltmeter or ohmmeter to TCM with connector disconnected from it.**

1) Remove TCM (1) from vehicle referring to “Transmission Control Module (TCM) Removal and Installation: ”.
2) Connect TCM connectors (2) to TCM.
3) Check voltage and/or pulse signal at each terminal of connectors connected using voltmeter (3) and oscilloscope (4).

**NOTE**

- **As each terminal voltage is affected by battery voltage, confirm that it is 11 V or more when ignition switch is ON.**
- **Voltage with asterisk (*) cannot be measured by voltmeter because it is pulse signal. Check it with oscilloscope if necessary.**

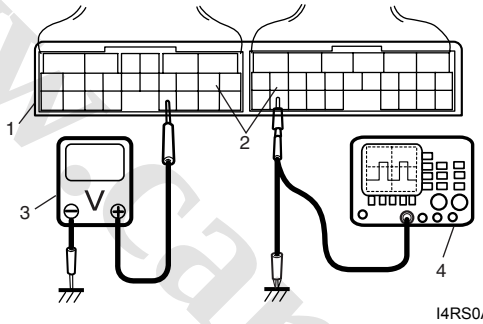


I4RS0A510021-02

3. Body ground

**Terminal arrangement of TCM coupler (Viewed from harness side)**

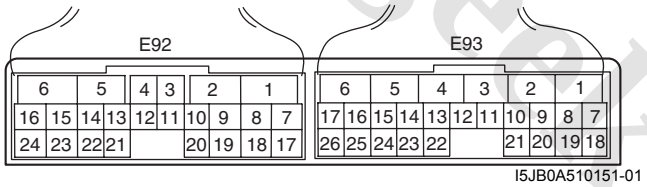


I5JB0A510151-01

www.cargeek.ir

**Connector "E92"**

| Terminal | Wire color | Circuit | Standard voltage | Condition |
|---|---|---|---|---|
| 1 | BLK/ORN | Ground | 0 – 1 V | Ignition switch ON |
| 2 | BRN/RED | Pressure control solenoid valve (–) | 0.6 – 1.0 V | Ignition switch ON |
| 3 | PPL/WHT | TCC pressure control solenoid valve (–) | 0.6 – 1.0 V | Ignition switch ON |
| 4 | YEL/RED | Pressure control solenoid valve (+) | *0 – 0.6 V ↑↓ 10 – 14 V ("Reference Waveform No. 1: ") | Engine running at idling. (Output signal is duty pulse. Duty ratio varies depending on throttle valve opening.) |
| 5 | GRN/YEL | TCC pressure control solenoid valve (+) | *0 – 0.6 V ↑↓ 10 – 14 V ("Reference Waveform No. 2: ") | Engine running at idling. (Output signal is duty pulse. Duty ratio varies depending on torque converter clutch operating condition.) |
| 6 | BLK/WHT | Power source | 10 – 14 V | Ignition switch ON |
| 7 | WHT | CAN communication line (Low) | *2.5 – 3.6 V ↑↓ 1.6 – 2.5 V ("Reference Waveform No. 3: ") | Engine running at idling with after warming up. (CAN communication signal is pulse. Pulse signal frequency varies depending on engine condition.)) |
| 8 | — | — | — | — |
| 9 | — | — | — | — |
| 10 | YEL/BLK | 3 position switch (–) | 0 – 1 V | Ignition switch ON |
| 11 | YEL/BLK | Transmission fluid temperature sensor (+) | 2.9 – 3.1 V | Ignition switch ON, fluid temperature is 20 °C (68 °F) |
| | | | 0.3 – 0.5 V | Ignition switch ON, fluid temperature is 100 °C (212 °F) |
| 12 | ORN | Transmission fluid temperature sensor (–) | 0 – 1 V | Ignition switch ON |
| 13 | — | — | — | — |
| 14 | — | — | — | — |
| 15 | GRN/RED | Shift solenoid valve-B (No.2) | 9 – 14 V | Ignition switch ON, select lever in "P" range |
| 16 | GRN | Shift solenoid valve-A (No.1) | 9 – 14 V | Ignition switch ON, select lever in "P" range |
| 17 | RED | CAN communication line (High) | *2.5 – 3.6 V ↑↓ 1.6 – 2.5 V ("Reference Waveform No. 3: ") | Engine running at idling with after warming up. (CAN communication signal is pulse. Pulse signal frequency varies depending on engine condition.) |
| 18 | — | — | — | — |
| 19 | — | — | — | — |
| 20 | YEL/RED | 3 position switch (+) | 2.4 – 4.3 V | Ignition switch ON, select lever in "P", "R", "N" or "D" range |
| | | | 0.8 – 2.4 V | Ignition switch ON, select lever in "3", "2" or "L" range |
| 21 | — | — | — | — |
| 22 | — | — | — | — |
| 23 | BLK | Ground | 0 – 1 V | Ignition switch ON |
| 24 | WHT | Power source for back-up | 10 – 14 V | Constantly |

www.cargeek.ir

 www.CarGeek.ir

**Connector "E93"**

| Terminal | Wire color | Circuit | Standard voltage | Condition |
|---|---|---|---|---|
| 1 | RED | Transmission range sensor ("R" range) | 8 – 14 V | Ignition switch ON, selector lever at "R" range |
| | | | 0 – 1 V | Ignition switch ON, selector lever at other than "R" range |
| 2 | — | — | — | — |
| 3 | — | — | — | — |
| 4 | PNK/WHT | 4L/N switch | 8 – 14 V | Ignition switch ON, transfer position in 4H |
| | | | 0 – 1 V | Ignition switch OFF, transfer position in 4L and N |
| 5 | WHT | Output shaft speed sensor (+) | 0 – 1 V | Ignition switch ON, engine stops |
| | | | *("Reference Waveform No. 4: ") | While engine running. (Output signal is waveform. Waveform frequency varies depending on output shaft speed. (18 pulses are generated par 1 input shaft revolution.)) |
| 6 | BLU | Input shaft speed sensor (+) | 0 – 1 V | Ignition switch ON, engine stops. |
| | | | *("Reference Waveform No. 5: ") | While engine running. (Output signal is waveform. Waveform frequency varies depending on output shaft speed. (24 pulses are generated par 1 input shaft revolution.)) |
| 7 | GRN | Transmission range sensor ("D" range) | 8 – 14 V | Ignition switch ON, selector lever at "D" range |
| | | | 0 – 1 V | Ignition switch ON, selector lever at other than "D" range |
| 8 | GRN/ORN | Transmission range sensor ("N" range) | 8 – 14 V | Ignition switch ON, selector lever at "N" range |
| | | | 0 – 1 V | Ignition switch ON, selector lever at other than "N" range |
| 9 | — | — | — | — |
| 10 | — | — | — | — |
| 11 | — | — | — | — |
| 12 | PNK/BLK | Diagnosis switch | 8 – 14 V | Ignition switch ON |
| 13 | — | — | — | — |
| 14 | ORN | Output shaft speed sensor (–) | 2 – 3 V | Ignition switch ON, engine at stop |
| 15 | — | — | — | — |
| 16 | PNK | Input shaft speed sensor (–) | 2 – 3 V | Ignition switch ON, engine at stop |
| 17 | — | — | — | — |
| 18 | GRN/WHT | Transmission range sensor ("L" range) | 8 – 14 V | Ignition switch ON, selector lever at "L" range |
| | | | 0 – 1 V | Ignition switch ON, selector lever at other than "L" range |
| 19 | GRN/ORN | Transmission range sensor ("2" range) | 8 – 14 V | Ignition switch ON, selector lever at "2" range |
| | | | 0 – 1 V | Ignition switch ON, selector lever at other than "2" range |
| 20 | PNK | Transmission range sensor ("P" range) | 8 – 14 V | Ignition switch ON, selector lever at "P" range |
| | | | 0 – 1 V | Ignition switch ON, selector lever at other than "P" range |
| 21 | — | — | — | — |
| 22 | — | — | — | — |
| 23 | PPL/WHT | Data link connector | 8 – 14 V | Ignition switch ON |
| 24 | — | — | — | — |
| 25 | — | — | — | — |
| 26 | — | — | — | — |

www.cargeek.ir

**Reference Waveform No. 1**
Pressure control solenoid valve signal at engine idling.

| | |
|---|---|
| Measurement terminal | CH1: “E92-4” to “E92-1” |
| Oscilloscope setting | CH1: 5 V/DIV<br>TIME: 20 ms/DIV |
| Measurement condition | • After warmed up to normal operating temperature<br>• Engine at specified idle speed with “P” range. |

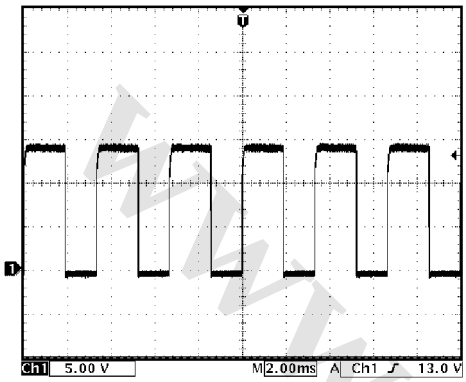

I3RM0B510029-01

**Reference Waveform No. 2**
TCC pressure control solenoid valve signal at engine idling.

| | |
|---|---|
| Measurement terminal | CH1: “E92-5” to “E92-1” |
| Oscilloscope setting | CH1: 5 V/DIV<br>Time: 2 ms/DIV |
| Measurement condition | • After warmed up to normal operating temperature<br>• Engine at specified idle speed with “P” range |

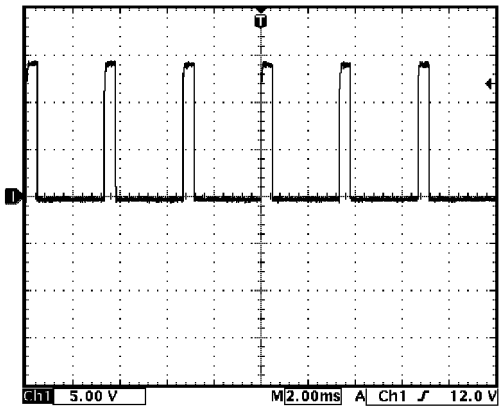

I4RS0A510024-01

**Reference Waveform No. 3**
CAN communication line (High & Low) signal at engine idling.

| | |
|---|---|
| Measurement terminal | CH1: “E92-7” to “E92-1”<br>CH2: “E92-17” to “E92-1” |
| Oscilloscope setting | CH1: 1 V/DIV<br>TIME: 100 μs/DIV |
| Measurement condition | • After warmed up to normal operating temperature<br>• Engine at specified idle speed with “P” range. |

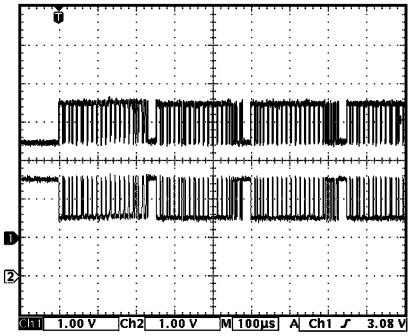

I3RM0B510030-01

**Reference Waveform No. 4**
Output shaft speed sensor signal at vehicle speed 40 km/h (25 mile/h).

| | |
|---|---|
| Measurement terminal | CH1: “E93-5” to “E92-1” |
| Oscilloscope setting | CH1: 5 V/DIV<br>TIME: 2 ms/DIV |
| Measurement condition | • After warmed up to normal operating temperature<br>• Drive vehicle at 40 km/h (25 mile/h). |

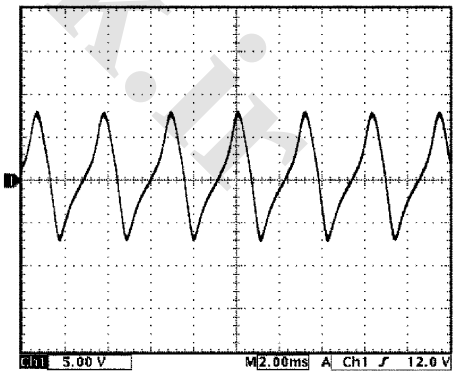

I5JB0A510046-02

www.cargeek.ir

 www.CarGeek.ir

**Reference Waveform No. 5**

Input shaft speed sensor signal at engine speed 3000 rpm.

| | |
|---|---|
| Measurement terminal | CH1: “E93-6” to “E92-1” |
| Oscilloscope setting | CH1: 2 V/DIV<br>TIME: 10 ms/DIV |
| Measurement condition | • After warmed up to normal operating temperature<br>• Engine at 3,000 rpm with “P” range. |

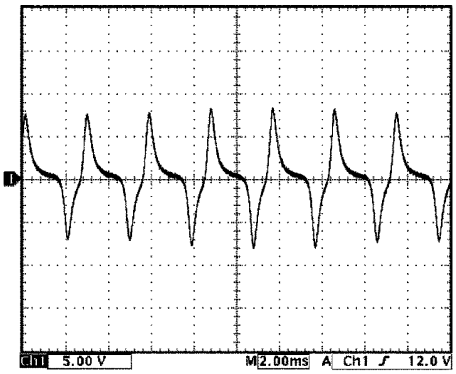


I5JB0A510047-02

## TCM Power and Ground Circuit Check

S5JB0A5104062

### Wiring Diagram

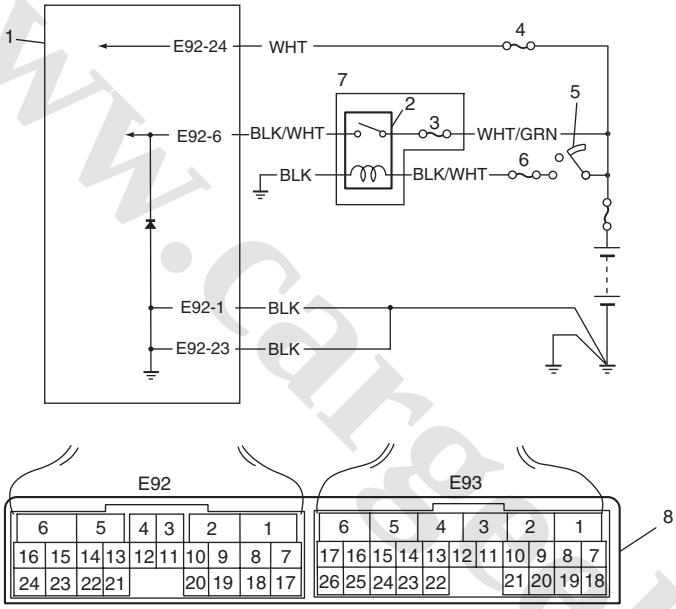


I5JB0A510152-01

| | |
|---|---|
| 1. TCM | 5. Ignition switch |
| 2. A/T relay | 6. “IG COIL” fuse |
| 3. “AT” fuse | 7. Power integration No.2 in main fuse box |
| 4. “DOME” fuse | 8. Terminal arrangement of TCM connector (viewed from harness side) |

www.cargeek.ir

**Troubleshooting**

| Step | Action | Yes | No |
|---|---|---|---|
| 1 | **Check TCM back-up power circuit**<br>1) Disconnect TCM connector with ignition switch OFF.<br>2) Check for proper connection to TCM at “E92-24” terminal.<br>3) If OK, check voltage at terminal “E92-24” of disconnected TCM connector.<br>*Is it 10 – 14 V?* | Go to Step 2. | “WHT” circuit open or shorted to ground. |
| 2 | **Check TCM power circuit**<br>1) Disconnect TCM connector with ignition switch OFF.<br>2) Check for proper connection to TCM at “E92-6” terminal.<br>3) If OK, turn ignition switch ON and check voltage at terminal “E92-6” of disconnected TCM connector.<br>*Is it 10 – 14 V?* | Go to Step 4. | Go to Step 3. |
| 3 | **Check A/T relay operation**<br>1) Check A/T relay operation referring to “A/T Relay Inspection: ”.<br>*Is check result satisfactory?* | “BLK/WHT”, “WHT/GRN”, or “BLK” circuit for power supply open. | Replace A/T relay included in power integration No.2 in main fuse box. |
| 4 | **Check TCM ground circuit**<br>1) Turn ignition switch OFF.<br>2) With TCM connectors disconnected, check for proper connection to TCM at “E92-1” / “E92-23” terminal.<br>3) If OK, check resistance between “E92-1” / “E92-23” terminal of disconnected TCM connector and body ground.<br>*Is continuity indicated?* | TCM power and ground circuits are in good condition. | “BLK” circuit for TCM ground open. |

www.cargeek.ir

 www.CarGeek.ir

# Repair Instructions

## A/T Fluid Level Check

S5JB0A5106041

### At Normal Operating Temperature

1) Drive vehicle so that A/T fluid temperature reach the normal operating temperature (70 – 80 °C (158 – 176 °F)).
2) Stop vehicle with engine running and place it level.
3) With select lever at “P” range, apply parking brake and place chocks against wheels.
4) Keep engine idling and shift selector slowly to “L” and back to “P” range.
5) With engine idling, pull out dipstick (1), wipe it off with a clean cloth and put it back into place.
6) Pull out dipstick (1) again and check fluid level indicated on it. Fluid level should be between FULL HOT and LOW HOT. If it is below LOW HOT, add specified A/T fluid up to FULL HOT.

**A/T fluid specification**
**SUZUKI ATF 3317 or Mobil ATF 3309**

**NOTE**

- **DO NOT RACE ENGINE while checking fluid level, even after engine is started.**
- **DO NOT OVERFILL. Overfilling can causes foaming and loss of fluid through breather. Then slippage and transmission failure can result.**
- **If vehicle was driven under high load such as pulling a trailer, fluid level should be checked about half an hour after it is stopped.**
- **When checking oil level, oil level gauge must be used in proper direction. Insert oil level gauge so that its front or back face is directed to the front of vehicle. When oil level indicated on front face of oil level gauge differs from that on back face, use lower one.**

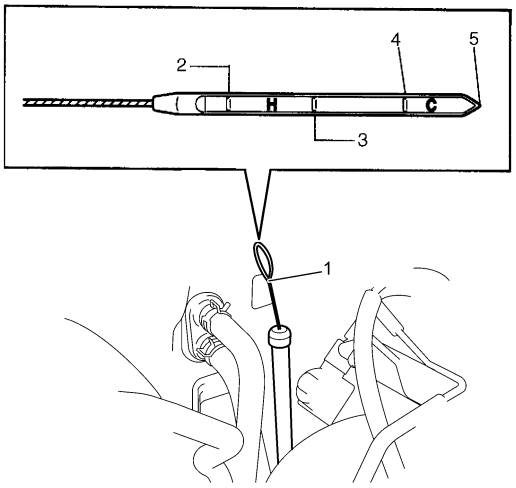


I5JB0A510028-02

| | |
|---|---|
| 2. “FULL HOT” | 4. “FULL COLD” |
| 3. “LOW HOT” | 5. “LOW COLD” |

### At Room Temperature

The fluid level check at room temperature performed after repair or fluid change before test driving is just preparation for level check of normal operating temperature. The checking procedure itself is the same as that described in “At Normal Operating Temperature” under “A/T Fluid Level Check: ”. If the fluid level is between FULL COLD and LOW COLD, proceed to test drive. And when the fluid temperature has reached the normal operating temperature, check fluid level again and adjust it as necessary.

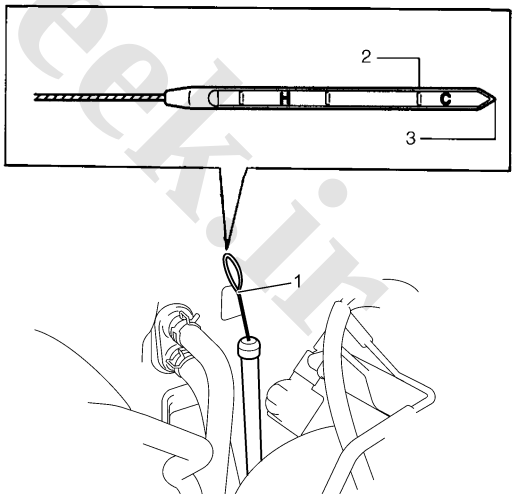


I5JB0A510029-02

| | |
|---|---|
| 1. Dipstick | 3. “LOW COLD” |
| 2. “FULL COLD” | |

www.cargeek.ir

## A/T Fluid Change

S5JB0A5106042

1) Lift up vehicle.
2) When engine is cool, remove drain plug (1) from oil pan and drain A/T fluid.
3) Install drain plug with new gasket.

**Tightening torque**
**A/T fluid drain plug (a): 20 N·m (2.0 kgf-m, 14.5 lb-ft)**

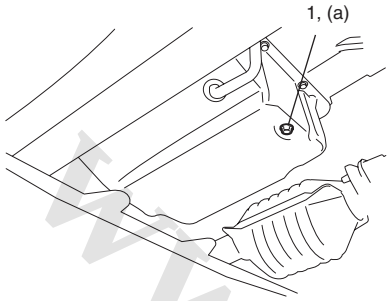


I5JB0A510030-03

4) Lower vehicle and fill proper amount of specified fluid.
5) Check fluid level referring to “At Normal Operating Temperature” under “A/T Fluid Level Check: ”.

**A/T fluid specification**
**SUZUKI ATF 3317 or Mobil ATF 3309**

**A/T fluid capacity reference value**
**When draining from drain plug hole: Approx. 2.5 liters (5.33/4.40 US/Imp. pt.)**
**When overhauling: Approx. 7.2 liters (15.36/12.67 US/Imp. pt.)**

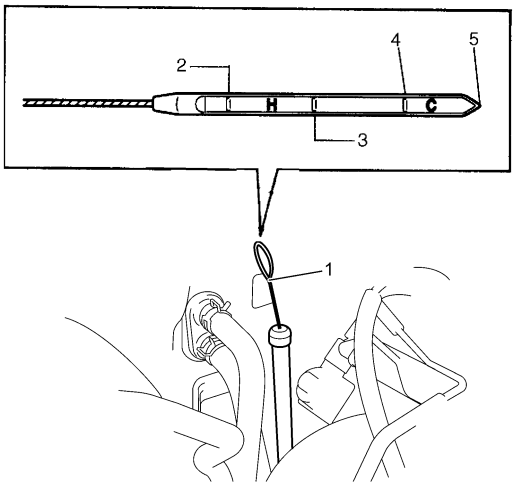


I5JB0A510031-02

| | |
|---|---|
| 1. Dipstick | 4. “FULL COLD” |
| 2. “FULL HOT” | 5. “LOW COLD” |
| 3. “LOW HOT” | |

## Manual Selector Assembly Components

S5JB0A5106043

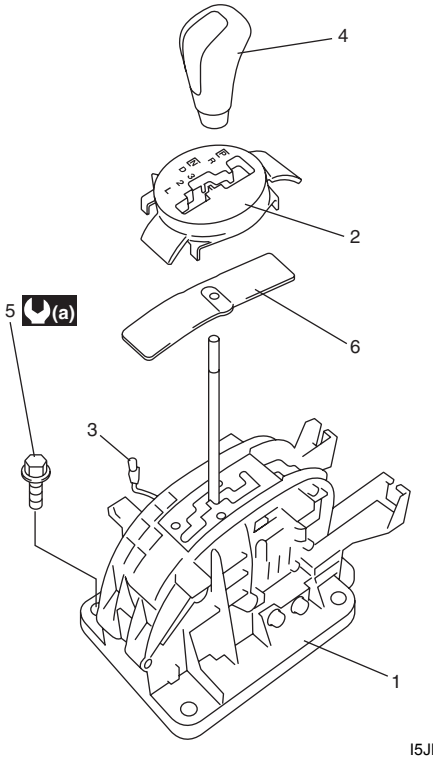


I5JB0A510033-01

| | |
|---|---|
| 1. | Manual lever assembly |
| 2. | Select indicator assembly |
| 3. | Illumination lamp assembly |
| 4. | Knob |
| 5. | Manual selector assembly mounting bolt |
| 6. | Slide cover |
| (a) : | 17.5 N·m (1.75 kgf-m, 13.0 lb-ft) |

www.cargeek.ir

 www.CarGeek.ir

## Manual Selector Assembly Removal and Installation

S5JB0A5106044

### Removal

1) Disconnect negative cable at battery.
2) Remove front console box.
3) Disconnect shift lever switch connector.
4) Remove manual selector assembly mounting bolts.
5) Disconnect select cable (1) from manual selector assembly (2).

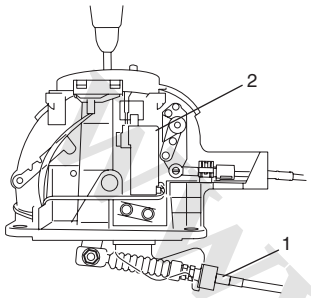


I5JB0A510034-02

### Installation

Reverse removal procedure to install manual selector assembly noting the following instructions.

- Tighten manual selector assembly mounting bolts to specified torque.

  **Tightening torque**
  **Manual selector assembly mounting bolt: 18 N·m (1.8 kgf-m, 13.0 lb-ft)**

- Adjust select cable referring to “Select Cable Adjustment: ”

## Select Lever Knob Installation

S5JB0A5106045

Screw select lever knob onto select lever by specified numbers of rotation below.

**<u>Rotation numbers for select lever knob</u>**
**Installation (a): 13 – 14 rotations**

**⚠ CAUTION**

**When installing select lever knob, do not turn more than specified numbers of rotation. Otherwise select lever knob is damaged.**

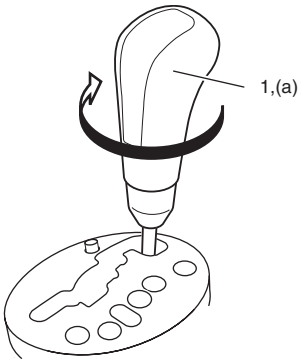


I4RS0A510058-01

## Manual Selector Assembly Inspection

S5JB0A5106046

Check select lever for smooth and clear-cut movement individually and position indicator for correct indication. If a malfunction is found, replace select lever assembly.

## “3” Position Switch Inspection

S5JB0A5106091

1) Disconnect negative cable at battery.
2) Remove front console box.
3) Disconnect manual selector connector (1).
4) Measure resistance between “3” position switch terminals.

**<u>“3” position switch specification</u>**
**Shift selector lever to “P”, “N” or “D” range: 3.96 – 4.04 kΩ**
**Shift selector lever to “R”, “3”, “2” or “L” range: 0.99 – 1.01 kΩ**

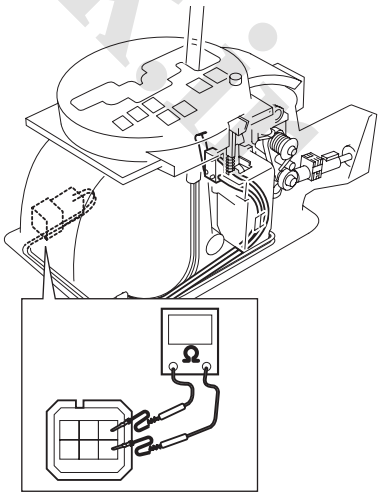


I5JB0A510164-01

www.cargeek.ir

## Select Cable Component

S5JB0A5106047

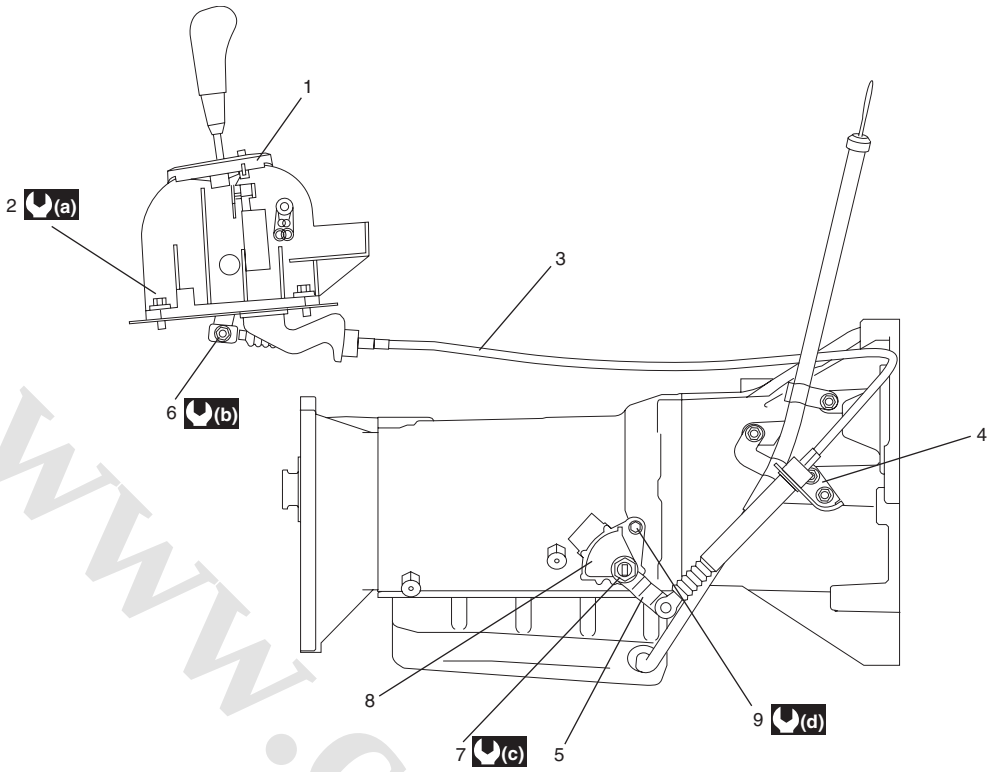


I5JB0A510035-01

| | | |
|---|---|---|
| 1. Manual selector assembly | 6. Manual select cable nut | (b) : 13 N·m (1.3 kgf-m, 9.5lb-ft) |
| 2. Manual selector assembly mounting bolt | 7. Manual select lever nut | (c) : 12.5 N·m (1.25 kgf-m, 9.0 lb-ft) |
| 3. Select cable | 8. Transmission range sensor | (d) : 5.3 N·m (0.53 kgf-m, 4.0 lb-ft) |
| 4. Select cable bracket | 9. Transmission range sensor bolt | |
| 5. Manual select lever | (a) : 17.5 N·m (1.75 kgf-m, 13.0 lb-ft) | |

## Select Cable Adjustment

S5JB0A5106048

1) Loosen manual select cable nut.
2) Shift select lever to “N”.
3) Align center line (1) on manual shift shaft (2) to “N” reference line (3) as shown in figure.

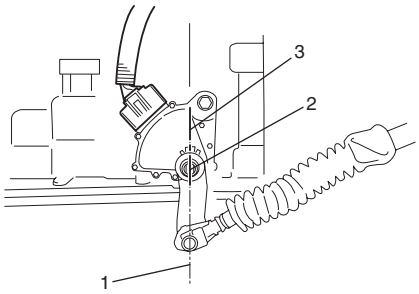


I5JB0A510038-02

4) Tighten manual select cable nut (1) to specified torque.

**Tightening torque**
**Manual select cable nut (a): 13 N·m (1.3 kgf-m, 9.5 lb-ft)**

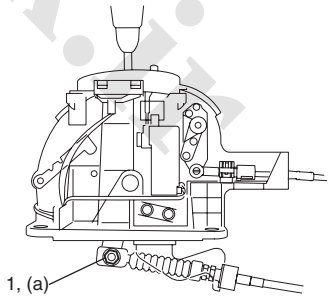


I5JB0A510036-02

5) After select cable was adjusted, check for the following.
   - Push vehicle with selector lever shifted to “P”. Vehicle should not move.
   - Vehicle can not be driven in “N”.
   - Vehicle can be driven in “D”, “3”, “2” and “L”.
   - Vehicle can be backed in “R”.

www.cargeek.ir

 www.CarGeek.ir

## Transmission Range Sensor Removal and Installation

S5JB0A5106049

### Removal

1) Disconnect negative cable at battery.
2) Hoist vehicle.
3) Disconnect transmission range sensor connector (1).
4) Disconnect select cable (2) from manual select lever (3).
5) Remove manual select lever (3) from transmission range sensor (4).

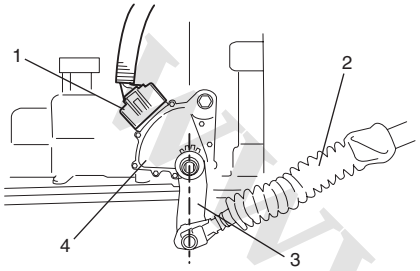


I5JB0A510037-01

6) Unbend bend parts of lock washer (1), then remove manual shift shaft nut (2), lock washer (1) and grommet.
7) Remove transmission range sensor (3) by removing sensor bolt (4).

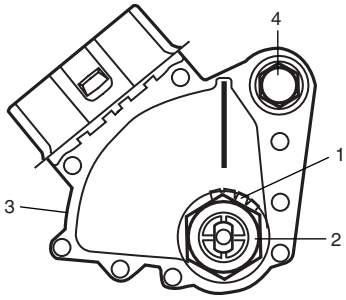


I4JA01512011-01

### Installation

1) Install transmission range sensor (3) and tighten sensor bolt (4) temporarily.
2) Install grommet, lock washer (1) and manual shift shaft nut (2).
   Tighten nut to specified torque. After tightening it, bend claws of lock washer (1).

   **Tightening torque**
   **Manual shift shaft nut (a): 12.5 N·m (1.25 kgf-m, 9.0 lb-ft)**

3) After turning manual shift shaft fully counterclockwise, turn it clockwise by 2 notches and set it to “N” range.
4) With “N” reference line (5) on range sensor and shaft center (6) aligned, tighten transmission range sensor bolt (4) to specified torque.

   **Tightening torque**
   **Transmission range sensor bolt (b): 5.3 N·m ( 0.53 kgf-m, 4.0 lb-ft)**

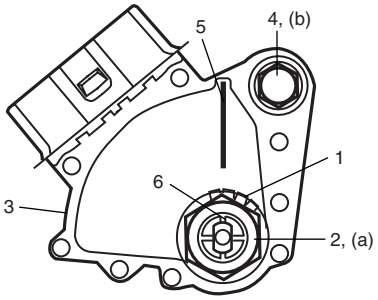


I4JA01512012-01

5) Install manual select lever (3) to transmission range sensor (4).
   Tighten nut to specified torque.

   **Tightening torque**
   **Manual select lever nut (a): 12.5 N·m (1.25 kgf-m, 9.0 lb-ft)**

6) Connect select cable (2) to manual select lever (3).
7) Connect transmission range sensor connector (1).
8) Connect negative cable at battery.
9) Adjust select cable referring to “Select Cable Adjustment: ”

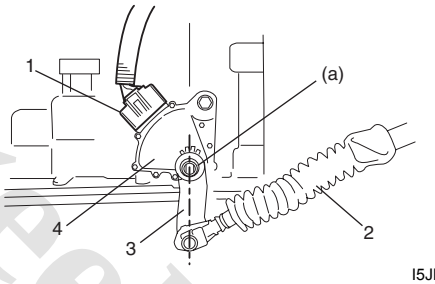


I5JB0A510039-02

## Transmission Range Sensor Inspection and Adjustment

S5JB0A5106050

1) Manual select lever to “N” range.
2) Check that center line (2) on manual shift and “N” reference line (1) on sensor are aligned. If not, loosen sensor bolt (3) and align them.

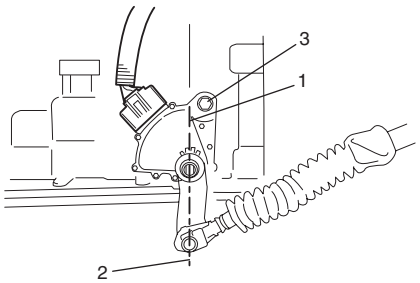


I5JB0A510040-01

www.cargeek.ir

3) Check that engine starts in “N” and “P” ranges but it doesn’t start in “D”, “3”, “2”, “L” or “R” range. Also, check that back-up lamp lights in “R” range.
If faulty condition cannot be corrected by adjustment, disconnect transmission range sensor connector and check that continuity exists as shown by moving select lever.

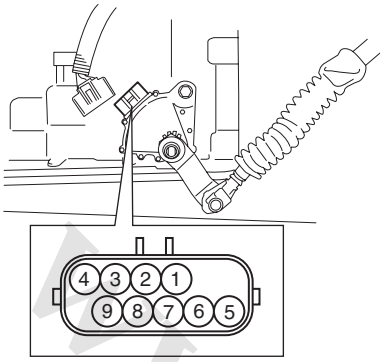


| [A] \ [B] | 1 | 2 | 3 | 4 | 5 | 6 | 7 | 8 | 9 |
|---|---|---|---|---|---|---|---|---|---|
| P | | | | ○ | ○ | | | | |
| | | ○ | | | | ○ | | | |
| R | ○ | ○ | | | | | | | |
| N | | | | ○ | ○ | | | | |
| | | ○ | | | | | | | ○ |
| D and 3 | | ○ | | | | | ○ | | |
| 2 | | ○ | ○ | | | | | | |
| L | | ○ | | | | | | ○ | |

I5JB0A510041-02

| | |
|---|---|
| [A]: | Sensor position |
| [B]: | Terminal No. |

## Key Interlock Cable Removal and Installation

S5JB0A5106051

**NOTE**

**Do not bend interlock cable excessively when removing and installing it, or system will not operate correctly.**

### Removal

1) Disconnect negative (–) cable from battery.
2) If equipped with air bag system, disable air bag system. Refer to “Disabling Air Bag System: in Section 8B”.
3) Remove steering column hole cover.
4) Tilt steering column if steering column is adjustable. If no adjustable, loosen steering column bolts.
5) Remove steering column cover.
6) Turn ignition switch to ACC position.
7) Pull out key interlock cable (1) from key cylinder cover (2) while pressing checkhook with slotted screwdriver or the like.

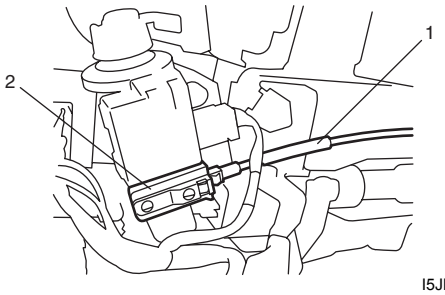


I5JB0A510062-01

8) Turn ignition switch to LOCK position.
9) Remove front console box.
10) Detach cable end (1) from interlock cam (2) while pressing claws (3) of interlock cam boss.
At this time, be careful not to cause damage to its claws.
Detach cable casing cap (4) from selector bracket (5) while pressing checkhook.
11) Remove interlock cable.

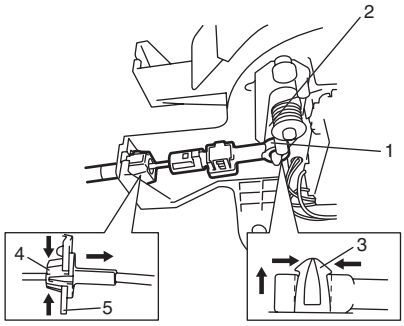


I5JB0A510063-01

### Installation

1) Lay interlock cable to its original cabling route.
2) Turn ignition switch to “ACC” position.
3) Insert cable casing cap (1) into key cylinder cover (2) securely.

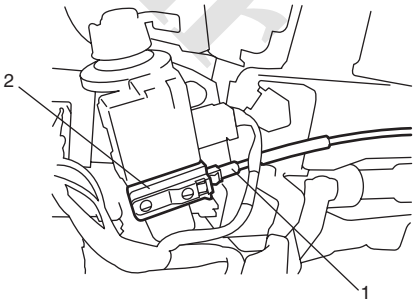


I5JB0A510064-01

www.cargeek.ir

 www.CarGeek.ir

4) Pass and connect interlock cable as shown in the figure.

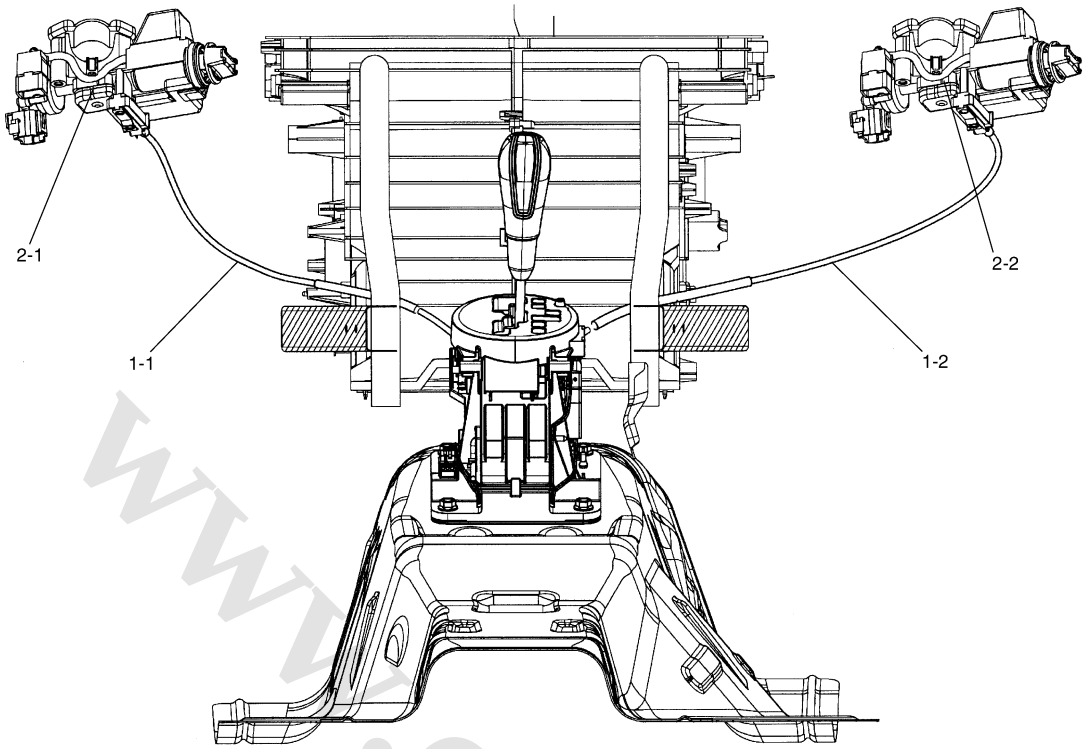


I5JB0A510065-02

| | |
|---|---|
| 1-1. Interlock cable for LH steering vehicle | 2-1. Key cylinder for LH steering vehicle |
| 1-2. Interlock cable for RH steering vehicle | 2-2. Key cylinder for RH steering vehicle |

5) Pull out lock button (1) of selector side cable end (2).

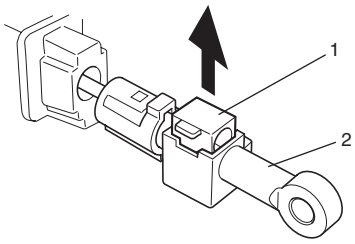


I5JB0A510066-01

6) Shift selector lever to “N” position.
7) Install cable casing cap (3) to selector bracket (4).
8) Connect cable end (1) to interlock cam (2) with ignition switch turned to “ACC” position.

9) Drive lock button (5) in cable end until it locks cable expansion and contraction.

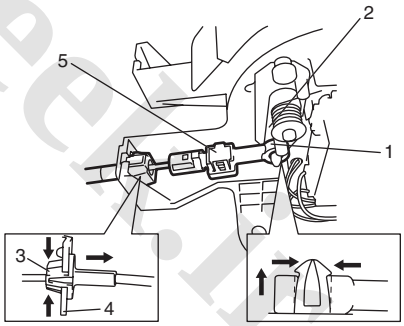


I5JB0A510067-01

10) Install steering column cover.
11) If the vehicle is equipped with air bag system, connect negative cable at battery and enable air bag system, referring to “Enabling Air Bag System: in Section 8B”.

www.cargeek.ir

## Brake and key Interlock System Inspection

S5JB0A5106052

1) Check that selector lever cannot be moved to any other range from “P” range position when ignition switch key is at ACC position, at LOCK position or it is removed from keyhole of ignition switch, or brake pedal is not depressed.

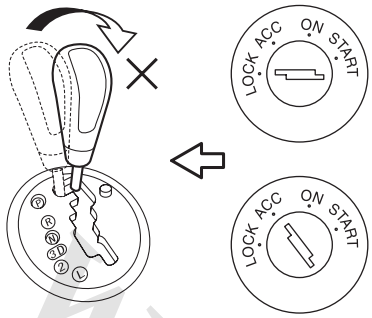


I5JB0A510165-01

2) Shift select lever to “P” range position, release knob button and check for the following.
   - Ignition key can be turned between LOCK and ACC positions back and forth and also it can be removed from ignition switch.

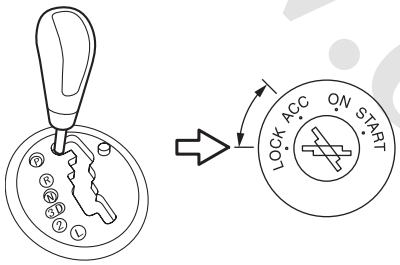


I5JB0A510166-01

   - With shift lock solenoid release button (1) pushed and ignition key turned to ACC position, selector lever can be shifted from “P” range position to any other range.
   - For LH steering vehicle, remove manual release button hole cover (1). With shift lock solenoid release button pushed by key or flat end rod and ignition key turned to LOCK position, selector lever can not be shifted from “P” range position to any other range.

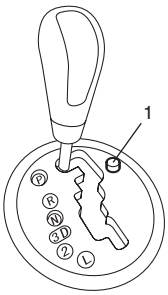


I5JB0A510167-01

   - For RH steering vehicle, with shift lock solenoid release button (1) pushed and ingition key turned to LOCK position, selector lever can not be shifted from “P” range position to any other range.

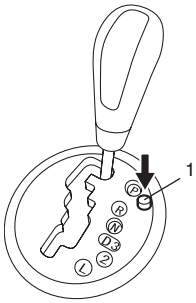


I5JB0A510168-01

   - When ignition switch is turned ON and brake pedal is depressed, selector lever can be shifted from “P” range position to any other range.

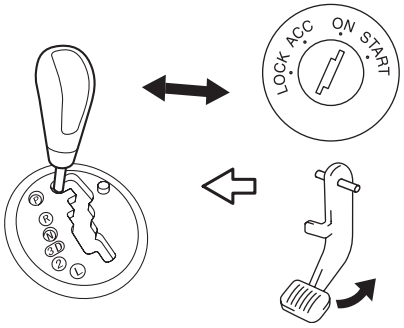


I5JB0A510169-01

3) With ignition lever shifted to any position other than “P” range, check that ignition key cannot be turned LOCK position and it cannot be removed from ignition switch unless it is at LOCK position.

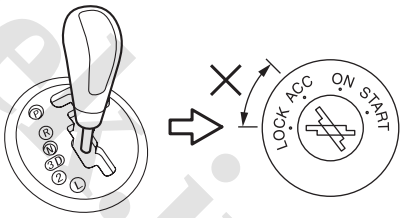


I5JB0A510170-01

www.cargeek.ir

 www.CarGeek.ir

## Mode Select Switch Inspection

S5JB0A5106053

1) Pull out mode select switch from front center console box.
2) Disconnect mode select switch connector.
3) Check continuity between mode select switch terminals.

**Mode select switch specification**

| Mode select switch | Normal position | Power position |
|---|---|---|
| Continuity | No continuity | Continuity |

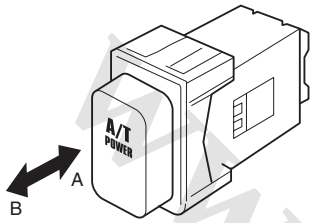


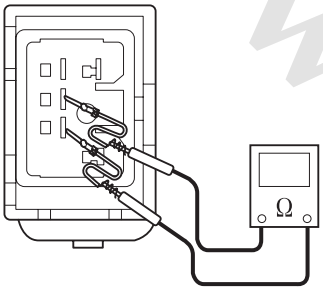


I5JB0A510042-01

| | |
|---|---|
| A: Push | B: Push again to release |

## Input Shaft Speed Sensor Removal and Installation

S5JB0A5106054

### Removal

1) Disconnect negative cable at battery.
2) Hoist vehicle.
3) Disconnect input shaft speed sensor connector.
4) Remove input shaft speed sensor (1) from transmission.

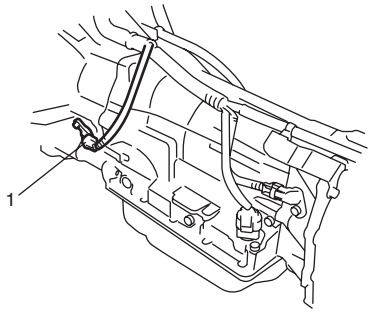


I5JB0A510043-01

### Installation

1) Check that sensor is free from any metal particles and damage.
2) Apply A/T fluid to new O-ring and then install input shaft speed sensor (1) to transmission.
   Tighten sensor bolt to specified torque.

   **Tightening torque**
   **Input shaft speed sensor bolt (a): 7 N·m (0.7 kgf-m, 5.0 lb-ft)**

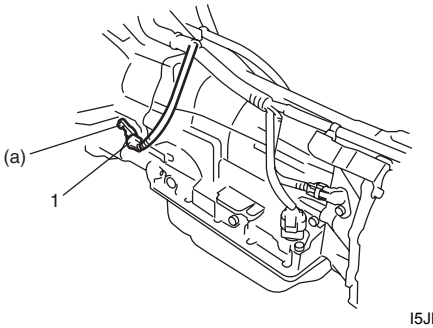


I5JB0A510044-01

3) Connect input shaft speed sensor connector.
4) Lower hoist.
5) Connect negative cable at battery.

## Input Shaft Speed Sensor Inspection

S5JB0A5106055

1) Disconnect negative cable at battery.
2) Hoist vehicle.
3) Disconnect input shaft speed sensor connector.
4) Check input shaft speed sensor (1) for resistance between terminals of sensor.

**Input shaft speed sensor resistance**
**Standard: 560 – 680 Ω (at 20 °C (68 °F))**

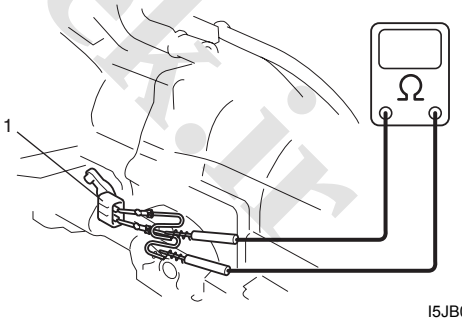


I5JB0A510045-01

www.cargeek.ir

## Output Shaft Speed Sensor Removal and Installation

S5JB0A5106056

### Removal

1) Disconnect negative cable at battery.
2) Hoist vehicle.
3) Disconnect output shaft speed sensor connector.
4) Remove output shaft speed sensor (1) from transmission.

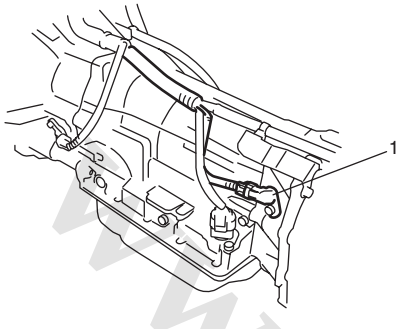


I5JB0A510048-01

### Installation

1) Check that sensor is free from any metal particles and damage.
2) Apply A/T fluid to new O-ring and then install output shaft speed sensor (1) to transmission.
   Tighten sensor bolt to specified torque.

   **Tightening torque**
   **Output shaft speed sensor bolt (a): 7 N·m (0.7 kgf-m, 5.0 lb-ft)**

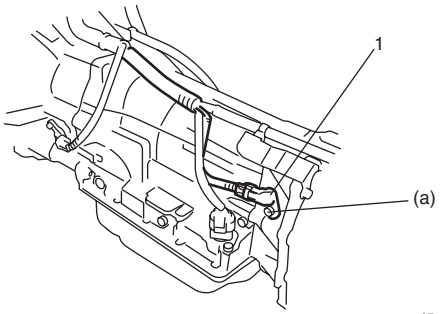


I5JB0A510049-01

3) Connect output shaft speed sensor connector.
4) Lower hoist.
5) Connect negative cable at battery.

## Output Shaft Speed Sensor Inspection

S5JB0A5106057

1) Disconnect negative cable at battery.
2) Hoist vehicle.
3) Disconnect output shaft speed sensor connector.
4) Check output shaft speed sensor (1) for resistance between terminals of sensor.

   **<u>Output shaft speed sensor resistance</u>**
   **Standard: 560 – 680 Ω (at 20 °C (68 °F))**

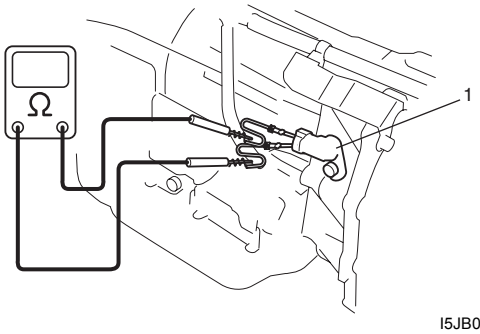


I5JB0A510050-01

www.cargeek.ir

 www.CarGeek.ir

## Oil Cooler Hose and Pipe Components

S5JB0A5106058

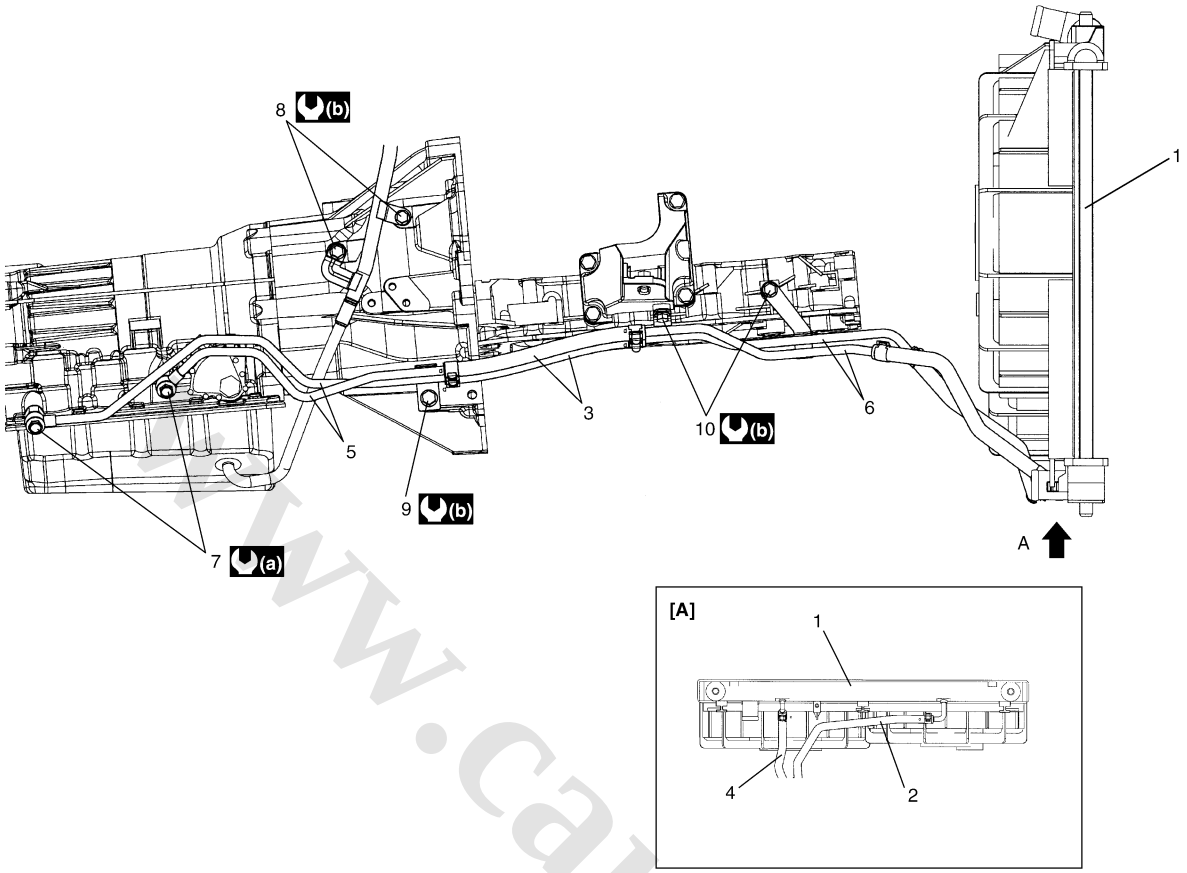


I5JB0A510032-03

| | | | | |
|---|---|---|---|---|
| [A]: View from A side | 3. Oil hose No.1 | 6. Oil pipe No.2 | 9. Oil pipe No.1 bolt | (b) : 10 N·m (1.0 kgf-m, 7.5 lb-ft) |
| 1. Radiator | 4. Oil hose No.4 | 7. Oil pipe union bolt | 10. Oil pipe No.2 bolt | |
| 2. Oil hose No.3 | 5. Oil pipe No.1 | 8. Oil pipe tube bolt | (a) : 25 N·m (2.5 kgf-m, 18.0lb-ft) | |

## Oil Cooler Hose and Pipes Removal and Installation

S5JB0A5106059

### Removal

1) Lift up vehicle.
2) Make sure to wash dirt off from around pipe joints.
3) With engine is cool, loosen oil cooler pipe union bolts (2) with oil outlet union locked and remove oil cooler pipes (1) from oil outlet unions and hoses.

**NOTE**

**To avoid fluid leakage, plug open ends of oil outlet unions and hoses right after they are disconnected.**

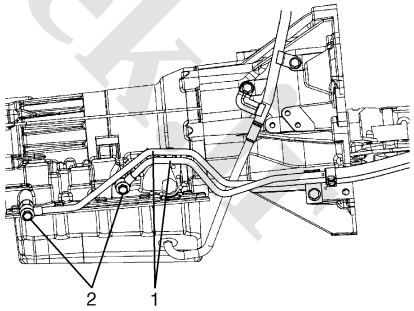


I5JB0A510153-01

| |
|---|
| 3. Pipe bolt |

www.cargeek.ir

**Installation**

When replacing them, be sure to note the followings.

- To replace clamps at the same time
- To insert hose as far as its limit mark
- To clamp hose securely

1) Use new union gaskets and connect oil cooler pipes to oil outlet unions.
2) Connect hoses to pipes and clamp them securely.
3) Tighten union bolts to specified torque with oil outlet union locked referring to “Oil Cooler Hose and Pipe Components: ”.
4) Tighten pipe bolt to specified torque referring to “Oil Cooler Hose and Pipe Components: ”.
5) Check A/T fluid level according to procedure described in “A/T Fluid Level Check: ”. Add if necessary.
6) Check for fluid leakage after warming up A/T.

## Solenoid Valves (Shift Solenoid-A, Shift Solenoid-B, TCC Pressure Control Solenoid and Pressure Control Solenoid Removal and Installation

S5JB0A5106060

**Removal**

1) Disconnect negative cable at battery.
2) Pull out fluid level gauge and lift up vehicle.
3) Remove drain plug (3) and drain A/T fluid.
4) Install drain plug (3) with new gasket.
5) Remove oil filler tube (2) and A/T oil pan (1).

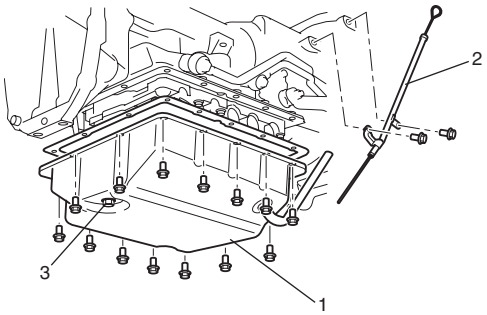


I5JB0A510051-02

6) Remove A/T oil strainer (1).

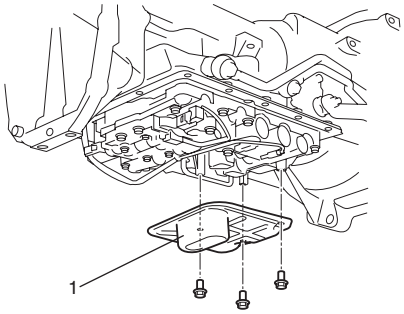


I5JB0A510052-01

7) Disconnect shift solenoid–A connector (1), shift solenoid–B connector (2), TCC pressure control solenoid connector (4) and Pressure control solenoid connector (3).
8) Remove solenoid valves.

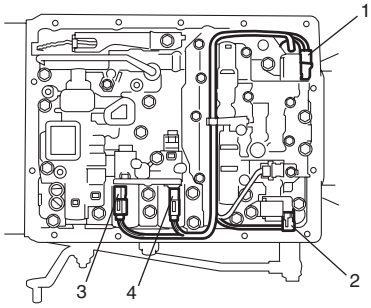


I5JB0A510053-01

**Installation**

Remove removal procedure to install solenoid valves, noting the following points.

- For details of solenoid valves and their connectors installation, refer to “Automatic Transmission Unit Assembly: ”. Use new O-ring.
- For details of A/T oil pan installation, refer to “Automatic Transmission Unit Assembly: ”.
- Tighten exhaust No.1 pipe bolts & nuts and exhaust bracket bolts & nuts.
- Fill A/T fluid and check fluid level according to procedure described in “A/T Fluid Change: ”.
- Check for fluid leakage after warming up A/T.

www.cargeek.ir

 www.CarGeek.ir

## Solenoid Valves (Shift Solenoid-A, Shift Solenoid-B, TCC Pressure Control Solenoid and Pressure Control Solenoid Inspection

S5JB0A5106061

### Solenoid Valves (Shift Solenoid–A and Shift Solenoid–B)

#### Resistance check

**⚠ CAUTION**

**Be very careful as dust etc. does not enter when solenoid valves are inspected.**

Measure resistance between terminal (2) and solenoid valve body. If resistance is out of specification, replace solenoid valve.

**Shift solenoid–A and Shift solenoid–B resistance**
**Standard: 11 – 15 Ω (at 20 °C (68 °F))**

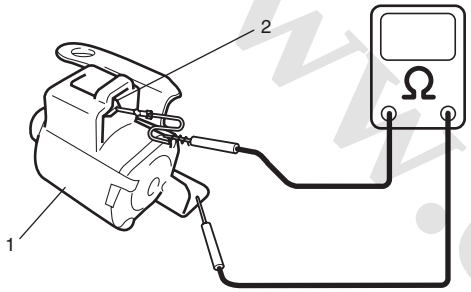


I5JB0A510054-01

| |
|---|
| 1. Shift solenoids |

#### Operation Check

- With solenoid connected to battery (2) as shown in the figure, check that solenoid valve is actuated with click sound.

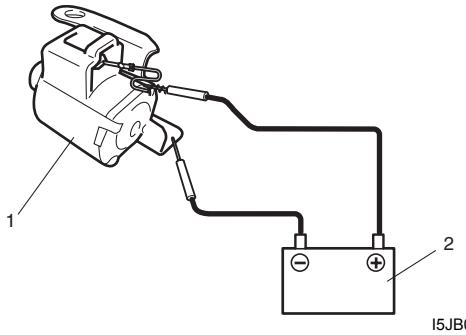


I5JB0A510055-01

| |
|---|
| 1. Shift solenoids |

- With shift solenoid valve (1) connected to battery (2), confirm that shift solenoid valve is open by blowing air (50 – 200 kPa, 0.5 – 2.0 kg/cm$^2$, 7 – 28.5 psi) into solenoid valve as shown in the figure.
- With shift solenoid valve (1) not connected to battery (2), confirm that shift solenoid valve is closed by blowing air (50 – 200 kPa, 0.5 – 2.0 kg/cm$^2$, 7 – 28.5 psi) into solenoid valve as shown in the figure.

**⚠ CAUTION**

**Do not insert air gun against strainer installed on inlet of solenoid valve too deeply, when blowing air into solenoid valve. If not, the strainer will be damaged.**

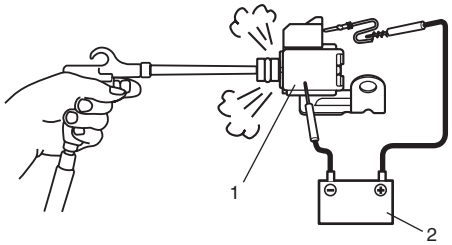


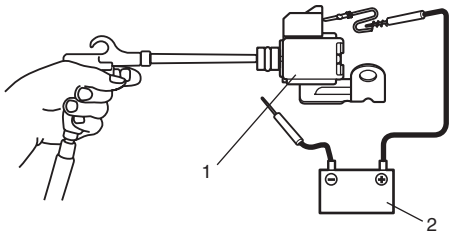


I5JB0A510056-01

### Pressure Control Solenoid Valve and TCC Pressure Control Solenoid Valve

#### Resistance check

**⚠ CAUTION**

**Be very careful as dust etc. does not enter when pressure control solenoid valves are inspected.**

Measure resistance between pressure control solenoid valves (Pressure control solenoid and TCC pressure control solenoid) (1) terminals. If resistance is out of specification, replace valve body assembly.

**Pressure control solenoid and TCC pressure control solenoid resistance**
**Standard: 5.0 – 5.6 Ω (at 20 °C (68 °F))**

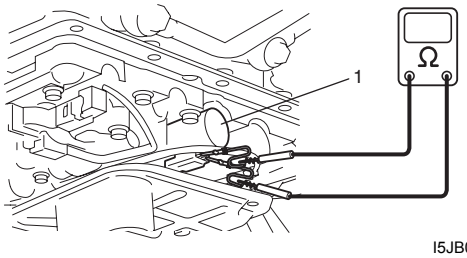


I5JB0A510057-01

www.cargeek.ir

**Operation check**

Check pressure control solenoid valves (Pressure control solenoid and TCC pressure control solenoid) (1) operation in either of the following methods.

**[Using regulated DC power supply]**

1) Connect pressure control solenoid valve (1) with regulated DC power supply (2) as shown in the figure.
2) Turn regulated DC power supply switch ON, increase voltage of power supply keeping current within 1.0 A.
3) Check that valve (3) moves gradually in arrow “A” direction as voltage increases.
4) Check that valve (3) moves in arrow “B” direction as voltage decreases.
5) Turn power supply switch OFF.

**⚠ CAUTION**

**Do not feed current 1.0 A or more, or pressure control solenoid will be burned out.**

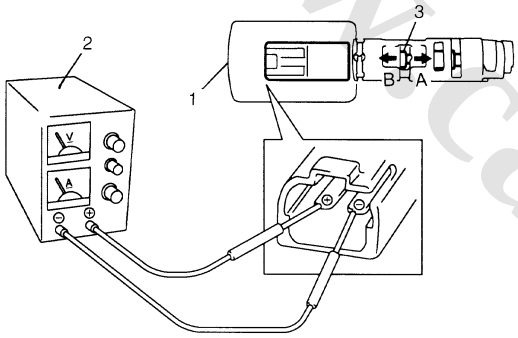


I4JA01512033-01

**[Not using regulated DC power supply]**

1) Connect pressure control solenoid valve (1) to battery (4) setting 21 W bulb (2) in between as shown in the figure.
2) Check that valve (3) moves in arrow “A” direction.
3) Disconnect pressure control solenoid valve (1) from battery (4) and check that valve (3) moves in arrow “B” direction as shown in the figure.

**⚠ CAUTION**

**Set 21 W bulb in between, or pressure control solenoid valve will be burned out.**

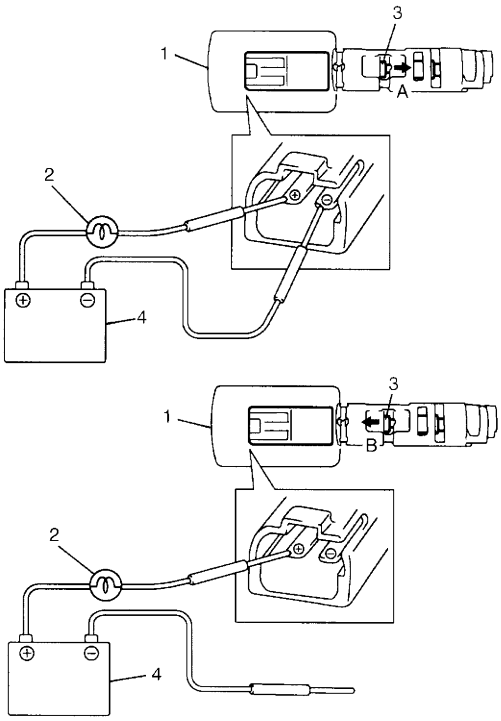


I4JA01512034-01

## Transmission Fluid Temperature Sensor Removal and Installation

S5JB0A5106062

**Removal**

1) Disconnect negative cable at battery.
2) Pull out fluid level gauge and lift up vehicle.
3) Remove drain plug and drain A/T fluid.
4) Install drain plug with new gasket.
5) Remove oil filler tube (2) and A/T oil pan (1).

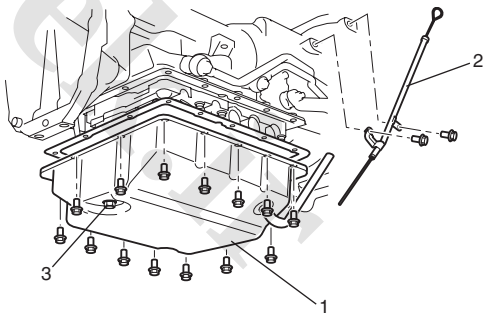


I5JB0A510051-02

6) Remove A/T oil strainer (1).

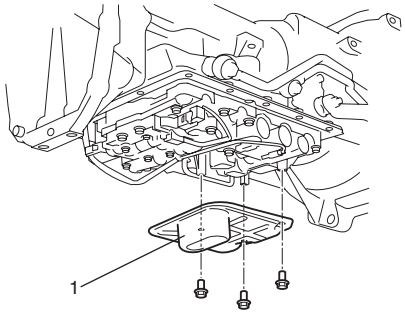


I5JB0A510052-01

 www.CarGeek.ir

7) Disconnect shift solenoid–A connector (1), shift solenoid–B connector (2), TCC pressure control solenoid connector (4) and Pressure control solenoid connector (3).
8) Remove solenoid valves.

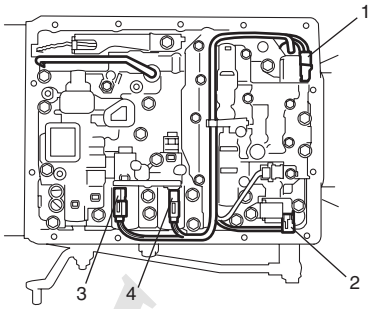

I5JB0A510058-01

9) After removing bolt (1) pull out transmission wire connector (2) from transmission case.

**⚠ CAUTION**

**When pulling transmission wire harness out of transmission case, take care not to damage connectors and transmission fluid temperature sensor at narrow exist of case. Careless sensor treatment might cause sensor malfunction.**

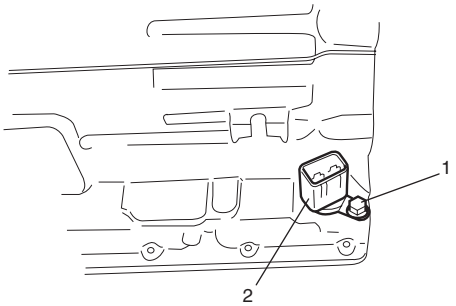

I5JB0A510059-01

**Installation**

Remove removal procedure to install transmission fluid temperature sensor, noting the following points.

- For details of solenoid valves and their connectors installation, refer to “Automatic Transmission Unit Assembly: ”. Use new O-ring.
- For details of A/T oil pan installation, refer to “Automatic Transmission Unit Assembly: ”.
- Fill A/T fluid and check fluid level according to procedure described in “A/T Fluid Change: ”.
- Check for fluid leakage after warming up A/T.
- Tighten transmission wire connector bolt to specified torque referring to “Automatic Transmission Unit Assembly: ”.

## Transmission Fluid Temperature Sensor Inspection

S5JB0A5106063

Immerse transmission fluid temperature sensor (1) in water or oil. Check transmission fluid temperature sensor resistance between terminals of connector. Thus make sure its resistance decreases as temperature rises.

If sensor resistance is out of specification, replace solenoid wire harness (2).

**Transmission fluid temperature sensor resistance**

**10 °C (50 °F): 6.445 kΩ**
**25 °C (77 °F): 3.5 kΩ**
**110 °C (230 °F): 0.247 kΩ**

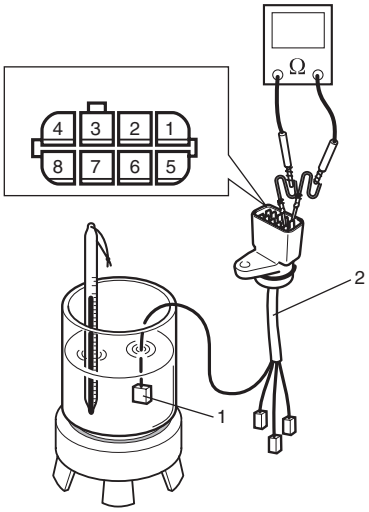

I5JB0A510060-01

www.cargeek.ir

## Transmission Control Module (TCM) Removal and Installation

S5JB0A5106064

**⚠ CAUTION**

**TCM consists of highly precise parts, so when handling it, be careful not to expose it to excessive shock.**

### Removal

1) Disconnect negative cable at battery.
2) Disable air bag system.
   Refer to “Disabling Air Bag System: in Section 8B”.
3) Remove glove box.
4) Disconnect connectors from TCM (1).
5) Remove TCM with 4WD control module by removing its nuts, and then separate TCM and 4WD control module.

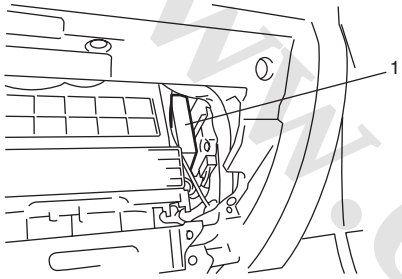


I5JB0A510061-01

### Installation

Reverse removal procedure noting the following points.

- Connect TCM connectors securely.
- Be sure to enable air bag system after TCM is back in place. Refer to “Enabling Air Bag System: in Section 8B”.

## A/T Relay Inspection

S5JB0A5106092

1) Disconnect negative cable at battery.
2) Remove integration relay No.2 (1) from fuse box No.2 (2).

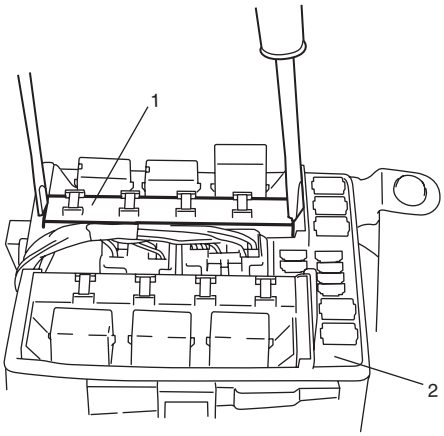


I5JB0A130031-02

3) Check that there is no continuity between terminals “E41-1” and “E38-8”.
   If there is continuity, replace relay.
4) Connect battery positive (+) terminal to terminal “E38-6” of relay. Connect battery negative (–) terminal to terminal “E38-7” of relay. Check for continuity between terminal “E41-1” and “E38-8”. If there is no continuity when relay is connected to the battery, replace integration relay No.2.

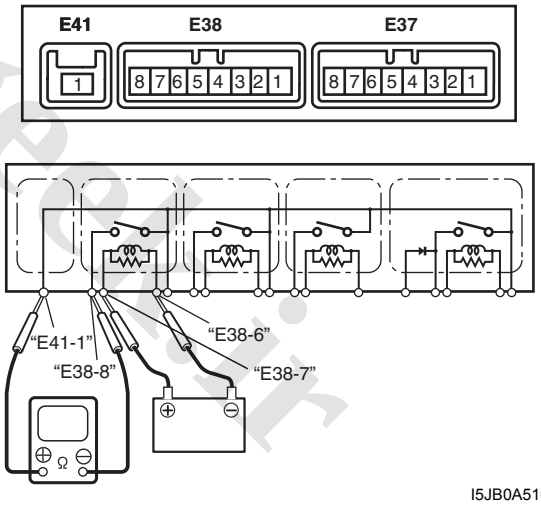


I5JB0A510159-01

www.cargeek.ir

 www.CarGeek.ir

## Automatic Transmission Unit Components

S5JB0A5106065

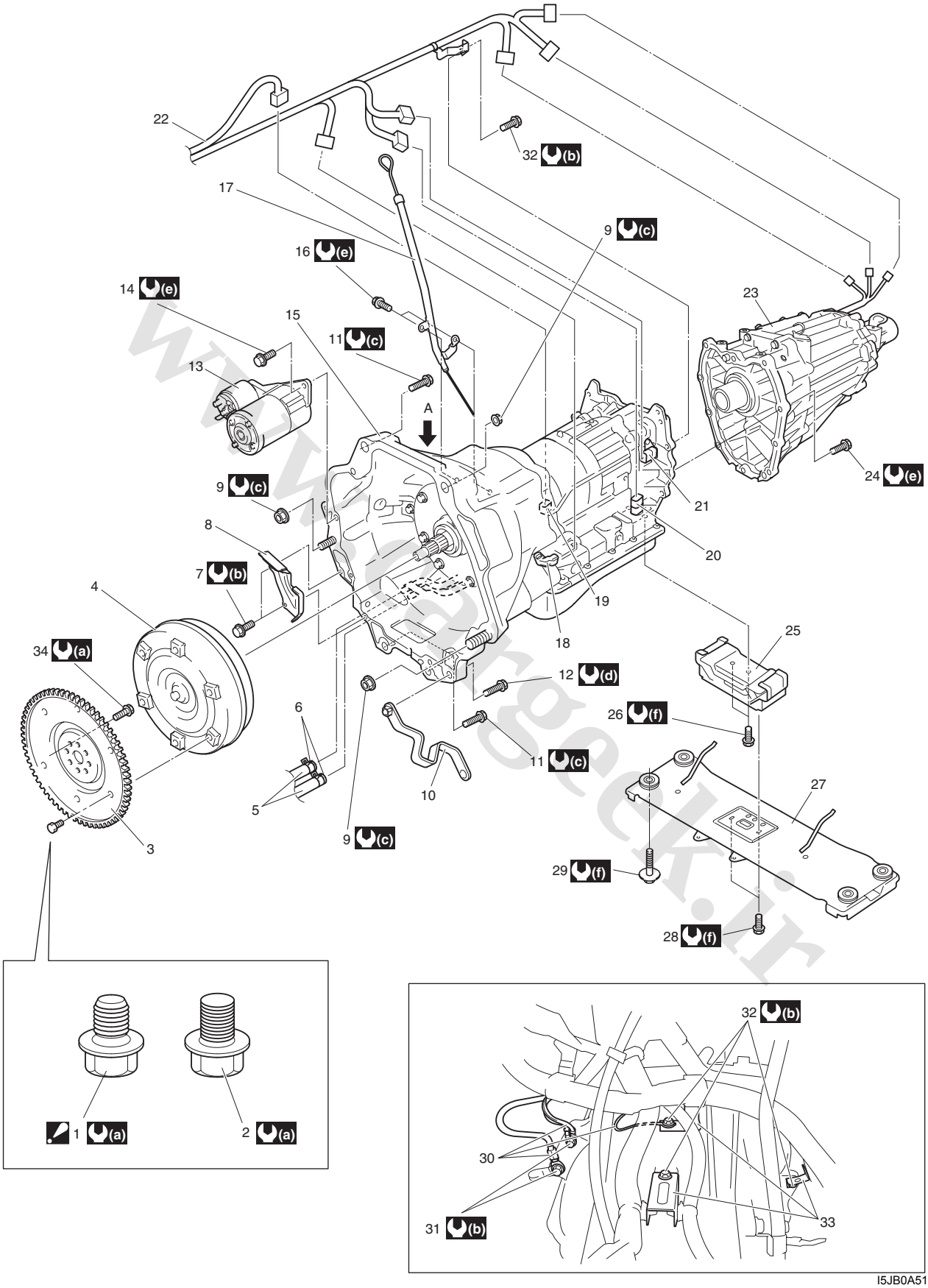


I5JB0A510003-01

www.cargeek.ir

| | | | |
|---|---|---|---|
| 1. Torque converter mounting bolt No.1 : After tightening torque converter mounting bolt No.1, tighten torque converter mounting bolt No.2. | 11. Transmission to engine bolt | 21. Output shaft speed sensor | 31. Engine earth cable bolt |
| 2. Torque converter mounting bolt No.2 | 12. Exhaust pipe No.2 bracket bolt | 22. Engine harness | 32. Harness bracket bolt |
| 3. Drive plate | 13. Starting motor | 23. Transfer | 33. Harness bracket |
| 4. Torque converter | 14. Starting motor bolt | 24. Transfer to transmission bolt | 34. Drive plate bolt |
| 5. Oil cooler hose | 15. Transmission | 25. Engine rear mounting | (a) : 65 N·m (6.5 kgf-m, 47.0 lb-ft) |
| 6. Clamp | 16. Oil filler tube bolt | 26. Engine rear mounting bolt | (b) : 10 N·m (1.0 kgf-m, 7.5 lb-ft) |
| 7. Drive plate cover bolt | 17. Oil filler tube | 27. Engine rear mounting bracket | (c) : 80 N·m (8.0 kgf-m, 58.0 lb-ft) |
| 8. Drive plate cover | 18. Input shaft speed sensor | 28. Engine rear mounting bracket bolt | (d) : 50 N·m (5.0 kgf-m, 36.5 lb-ft) |
| 9. Engine to transmission bolt | 19. Output shaft speed sensor | 29. Mounting member bolt | (e) : 23 N·m (2.3 kgf-m, 17.0 lb-ft) |
| 10. Exhaust pipe No.2 bracket | 20. Transmission wire connector | 30. Engine earth cable | (f) : 55 N·m (5.5 kgf-m, 40.0 lb-ft) |

## Automatic Transmission Assembly Dismounting and Remounting

S5JB0A5106066

### Dismounting

1) Dismount engine with transmission and transfer referring to “Engine Assembly Removal and Installation: For J20 Engine in Section 1D”.
2) Disconnect connectors from output shaft speed sensor, input shaft speed sensor, transmission range sensor, transmission wire, transfer actuator, differential lock switch and 4L/N switch release their wire harnesses from clamps.
3) Remove transfer from transmission.
4) Remove engine earth cable.
5) Remove engine rear mounting member and rear mounting.
6) Remove oil filler tube.
7) Remove cooler hose.
8) Remove drive plate cover, and then remove drive plate bolts by holding crankshaft pulley bolt stationary.
9) Remove Starting Motor referring to “Starting Motor Dismounting and Remounting: in Section 1I”.
10) Remove transmission assembly from engine assembly.

### Installation

For remounting, reverse dismounting procedure noting the following points.

- Tighten each bolts and nuts referring to “Automatic Transmission Unit Components: ”
- Tighten drive plate bolt No.1 (1) first and then tighten drive plate bolts No.2 (2).

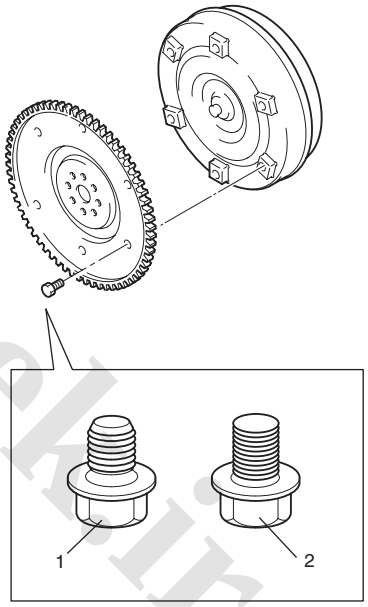


I5JB0A510068-01

- Set each clamp for wiring securely.
- Fill A/T fluid referring to “A/T Fluid Change: ”.
- Connect battery and check function of engine and transmission.

www.cargeek.ir

 www.CarGeek.ir

## Automatic Transmission Unit Disassembly

S5JB0A5106067

1) Extract torque converter. And remove oil filler tube and dipstick.

**⚠ CAUTION**

**Remove torque converter as much straight as possible. Leaning it may cause damage to oil seal lip.**

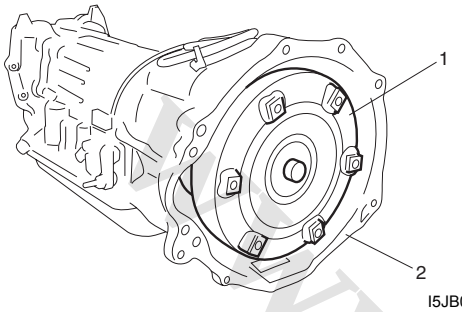


I5JB0A510069-01

| | |
|---|---|
| 1. | Torque converter |
| 2. | Converter housing |

2) Remove input shaft speed sensor (1) and output shaft speed sensor (2).
3) Remove 6 adapter case fixing bolts and then remove adaptor case (3) and gasket.

**NOTE**

**Use care not to cause damage to oil seal.**

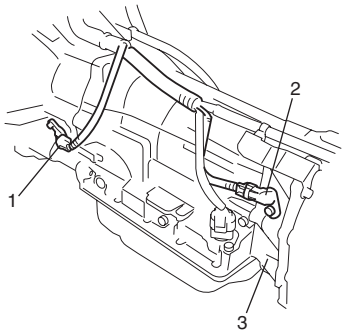


I5JB0A510070-02

4) Remove shift switch (1).

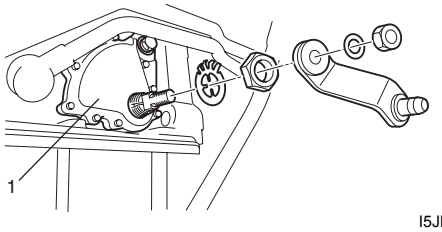


I5JB0A510071-01

5) Remove C-ring (1) and then remove speed sensor rotor (2).

**NOTE**

**Use care not to loose rotor stop key.**

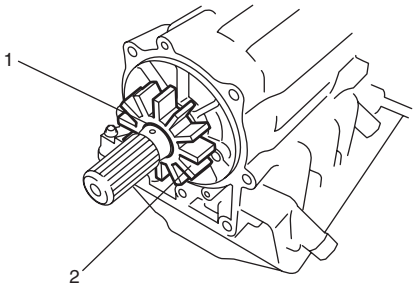


I5JB0A510072-01

6) Remove oil pump (1) by using special tools.

**Special tool**
**(A): 09913–65135**
**(B): 09927–66520**

**NOTE**

**Use care not to cause damage to shaft bushing surface.**

7) Remove bearing at the rear of oil pump (1).
8) Remove O-ring from oil pump (1).
9) Holding input shaft (2) by hand, remove converter housing (3).

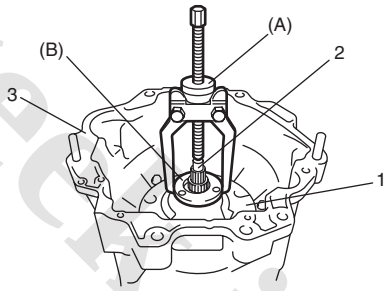


I5JB0A510073-01

www.cargeek.ir

10) Check dimensions of overdrive (O/D) case (1) surface and clutch cylinder (2) surface for reassembly.
11) Remove overdrive (O/D) clutch assembly by holding input shaft (3).
12) Remove O/D case, bearing and bearing race.

**NOTE**

**Confirm direction of bearing and bearing race for reassembly.**

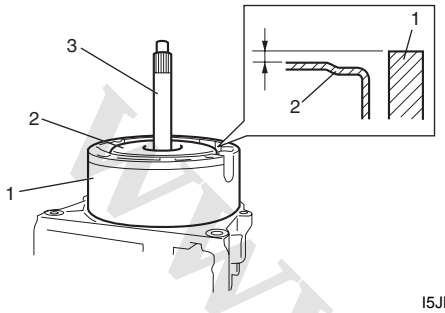


I5JB0A510074-01

13) Remove oil pan (1).

**NOTE**

- **Hold oil pan with oil pan side down to prevent foreign material in oil pan from entering valve body.**
- **If iron powder is found, it is possible that bearing, gear or clutch plate is worn.**

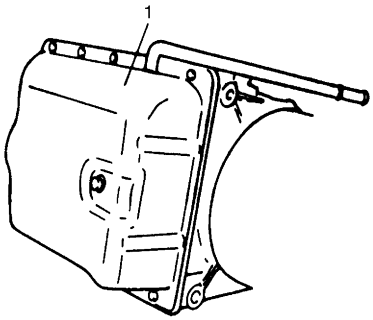


IYSQ01510094-01

14) Remove oil strainer (1).

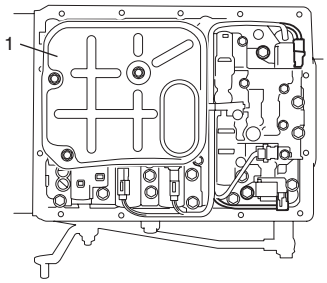


I5JB0A510075-01

15) Remove overdrive (O/D) brake apply tube (1).
16) Disconnect couplers, and then remove transmission wire connector (2).

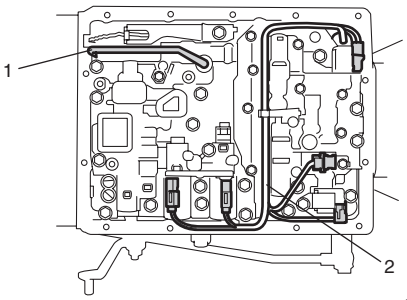


I5JB0A510077-02

17) Remove valve body (1) mounting bolts as shown in the figure.

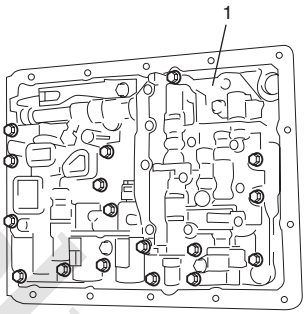


I5JB0A510076-01

www.cargeek.ir

 www.CarGeek.ir

18) Remove accumulator pistons (1) by blowing air into holes (2) as shown in the figure.

**NOTE**

**Hold accumulator piston (1) with shop cloth while blowing.**

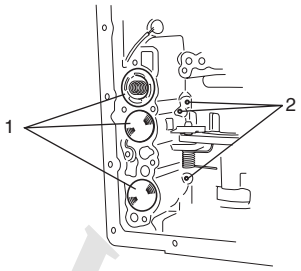


I5JB0A510078-02

19) Place transmission (1) upright as shown in the figure.

**NOTE**

- **To prevent transmission case from getting damaged, protect its contacting surface with stand by using shop cloth or the like.**
- **A stand of such size as shown in the figure will facilitate work.**

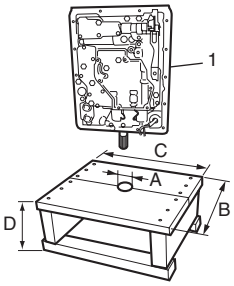


I5JB0A510079-01

| | |
|---|---|
| A: | 50 mm (1.9 in.) |
| B: | 350 mm (13.8 in.) |
| C: | 400 mm (15.7 in.) |
| D: | 200 mm (7.9 in.) |

20) Check top surface level of forward clutch (2) against case (1) for reassembly.

21) Remove forward clutch.

**NOTE**

**Confirm direction of bearing and bearing race for reassembly.**

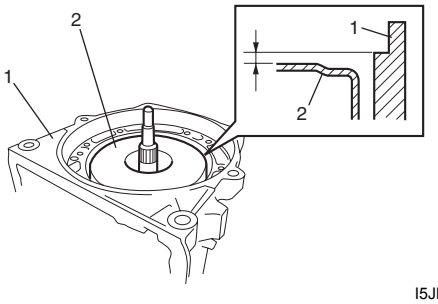


I5JB0A510080-01

22) Remove direct clutch (1).

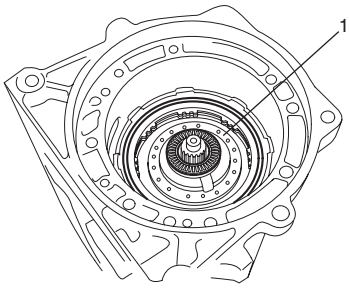


I5JB0A510081-01

23) Remove pawl bracket (1), and then parking lock rod (2) from manual shift lever.

24) Remove pawl spring (3), pawl pin and parking rock pawl (4).

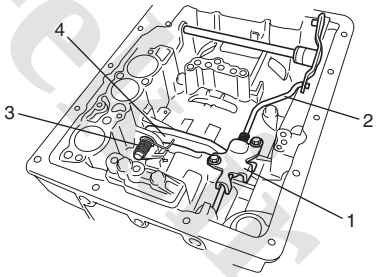


I5JB0A510082-01

25) Remove 2 bolts (1) from valve body side.

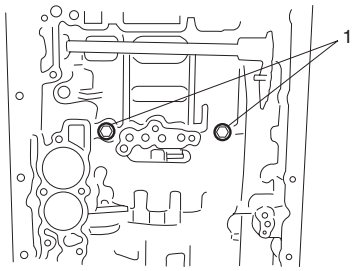


I5JB0A510083-01

www.cargeek.ir

26) Remove center support assembly (1).

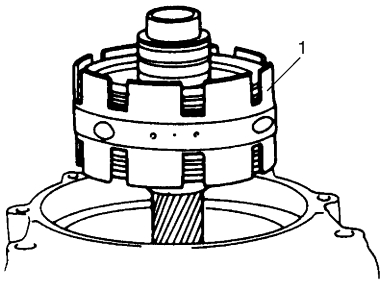


IYSQ01510104-01

27) Remove retaining ring (1), planetary gear assembly leaf spring, bearing and bearing race.

**NOTE**

- **Use care not to cause damage to case when removing retaining ring.**
- **Confirm direction of bearing and bearing race for reassembly.**

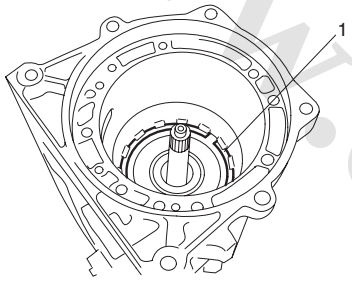


I5JB0A510084-01

28) Remove apply tube.

29) Remove reverse brake return spring (1) using special tools.

**Special tool**
**(A): 09926–98390**
**(B): 09944–88210**
**(C): 09926–98320**

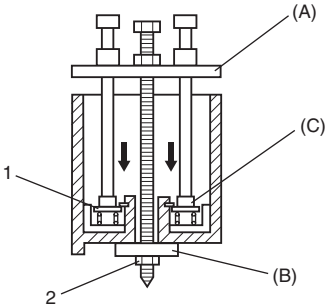


I5JB0A510085-01

| | |
|---|---|
| 2. | Nut M12 x 1.75 |

30) Remove reverse brake piston (1) by applying compressed air (400 – 800 kPa, 4 – 8 kg/cm$^2$, 57 – 113 psi) to oil hole (2).

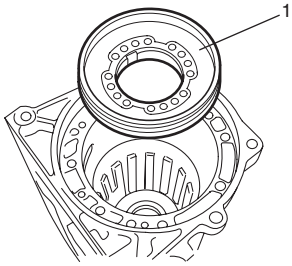


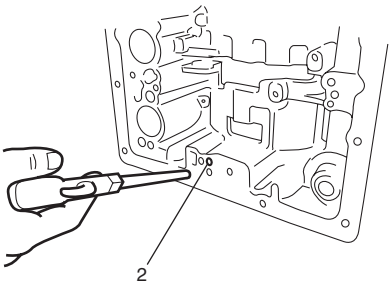


I5JB0A510086-02

31) Apply compressed air (400 – 800 kPa, 4 – 8 kg/cm$^2$, 57 – 113 psi) to oil hole (3) to remove brake reaction sleeve (1) and secondary reverse piston (2).

32) Remove brake reaction sleeve (1) and secondary reverse piston (2) by using special tools.

**Special tool**
**(A): 09920–20310**

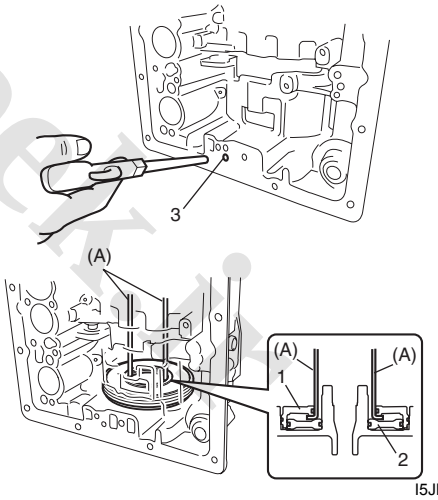


I5JB0A510087-02

www.cargeek.ir

 www.CarGeek.ir

33) Remove manual shift shaft and lever as follows.

a) Undo caulking of sleeve cover (1) by using flat end rod or the like and hammer.

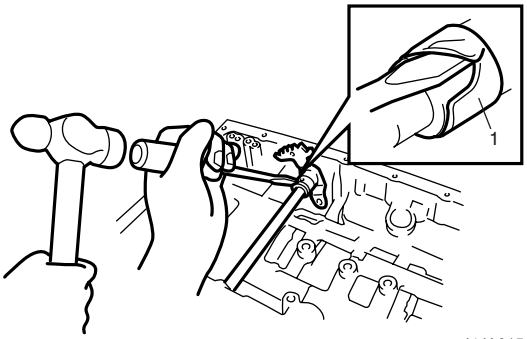


I4JA01512082-01

b) Drive out manual shift lever pin (1) by using special tool and hammer.

**Special tool**
**(A): 09922–89810**

c) Pull out manual shift shaft (2) from transmission case, and then remove manual shift lever (3) and sleeve cover (4).

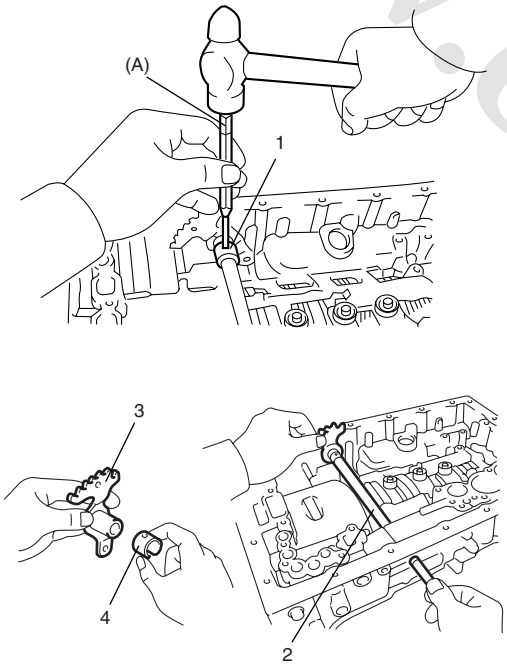


I4JA01512083-01

34) Remove oil seal (1) from both sides of transmission case.

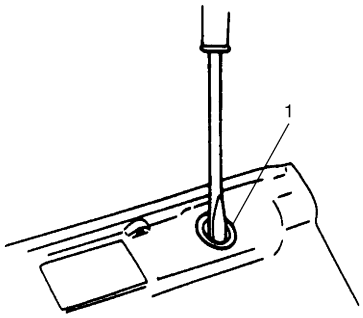


IYSQ01510111-01

35) Remove cover plate (1).

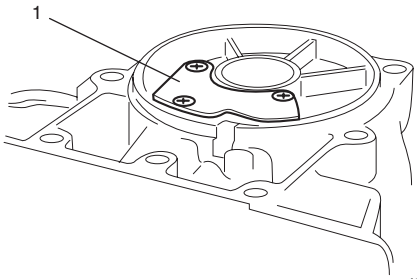


I5JB0A510089-01

www.cargeek.ir

www.cargeek.ir

## Oil Pump Components

S5JB0A5106068

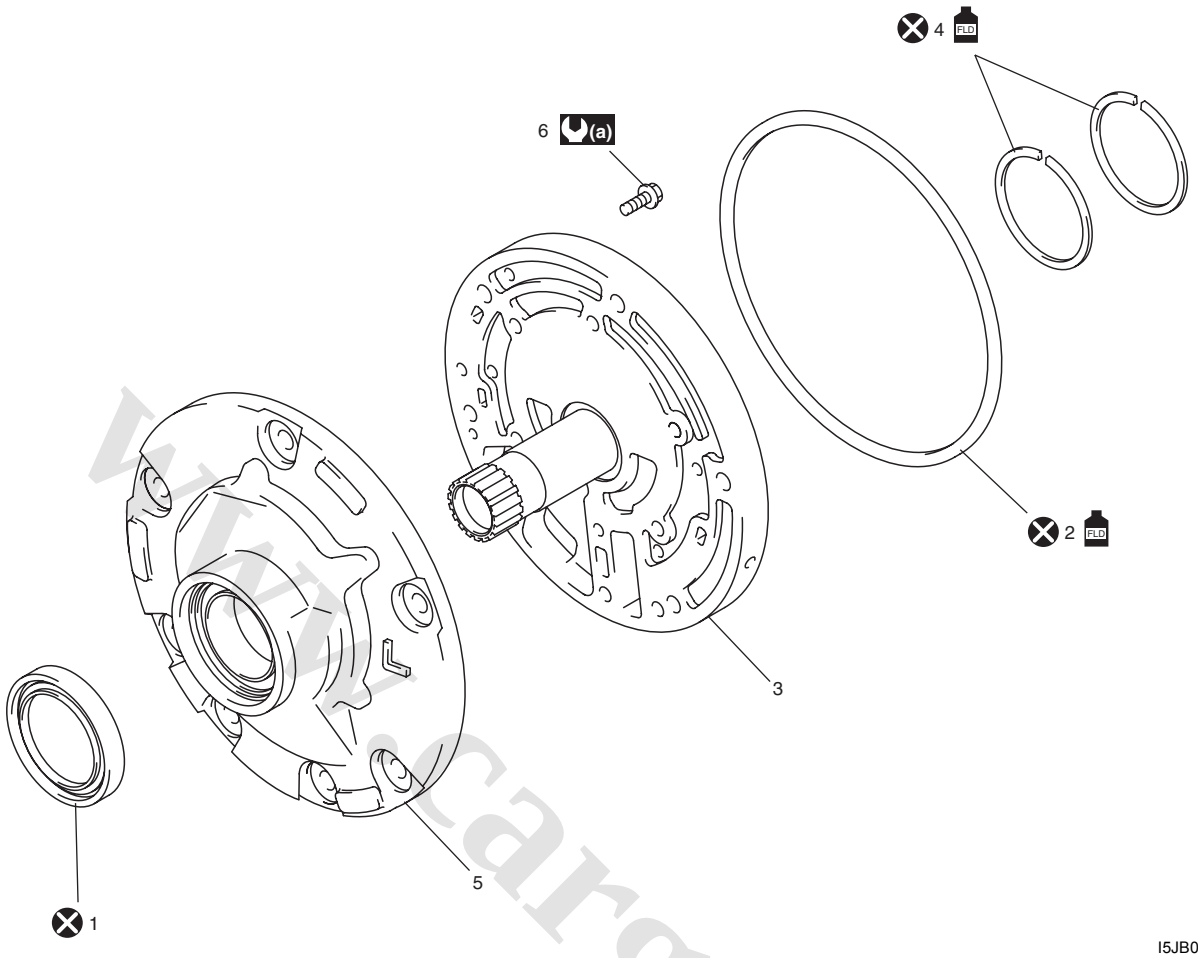


I5JB0A510090-01

| | | |
|---|---|---|
| 1. Oil pump body oil seal | 4. Seal ring | (a) : 7.5 N·m (0.75 kgf-m, 5.5 lb-ft) |
| 2. Oil pump cover O-ring | 5. Oil pump body | ⊗ : Do not reuse. |
| 3. Oil pump cover | 6. Oil pump bolt | FLD : Apply A/T fluid. |

www.cargeek.ir

 www.CarGeek.ir

## Oil Pump Disassembly and Assembly

S5JB0A5106069

### Disassembly

1) Remove 6 bolts, oil pump cover (1), drive gear and driven gear in that order.

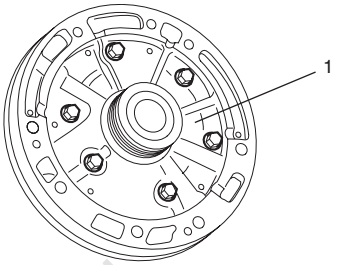


I5JB0A510091-01

2) Remove oil pump cover O-ring.
3) Remove oil pump body oil seal (1) using special tool.

**Special tool**
**(A): 09913–50121**

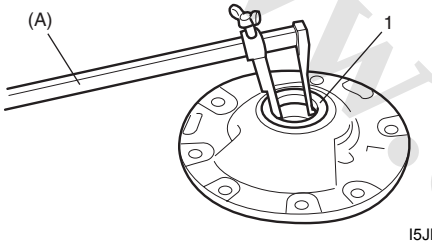


I5JB0A510093-01

### Assembly

Assemble each component by reversing removal procedure and noting the following points.

- Before installing inner gear and outer gear to pump body, apply A/T fluid to them.
- Install oil pump seal using special tool.

**Special tool**
**(A): 09913–85210**

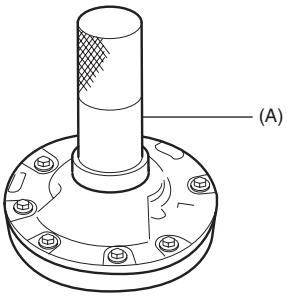


I5JB0A510092-01

- When installing pump cover, use care so that its splined part will not cause damage to oil seal and use specified torque to tighten it to pump body.

**Tightening torque**
**Oil pump bolt (a): 7.5 N·m (0.75 kgf-m, 5.5 lb-ft)**

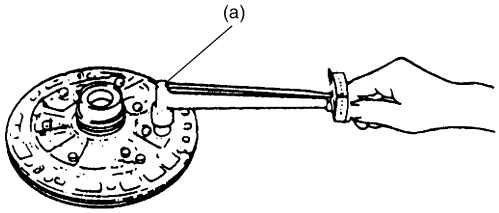


IYSQ01510114-01

- When installing O-ring and oil seal, apply enough A/T fluid to them and fit them securely in groove.
- After installation, check that inner gear turns smoothly by making use of torque converter.
- When installing seal ring, it should not be opened more than necessary.
- Fit claws of seal ring securely.

## Oil Pump Inspection

S5JB0A5106070

- Check seal ring (2) and bushing (1) for wear and damage.

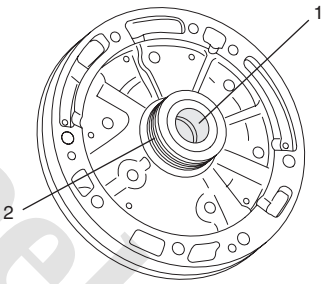


I5JB0A510094-01

- Check clearance between outer gear (1) and body.

**<u>Clearance between outer gear and body</u>**
**Standard: 0.07 – 0.15 mm (0.0028 – 0.0059 in.)**
**Service limit: 0.30 mm (0.0118 in.)**

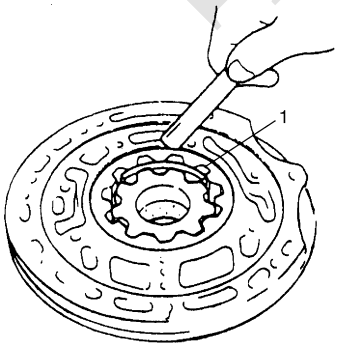


IYSQ01510116-01

www.cargeek.ir

- Check tip clearance between inner gear (1) and outer gear.

  **Tip clearance between inner gear and outer gear**
  **Standard: 0.11 – 0.14 mm (0.0043 – 0.0055 in.)**
  **Service limit: 0.30 mm (0.0118 in.)**

  **NOTE**

  **Measure with torque converter installed.**

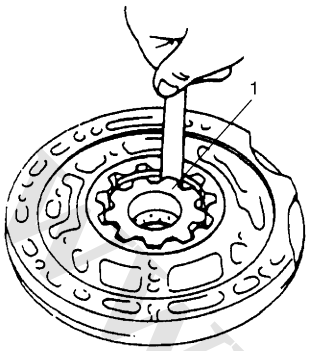


IYSQ01510117-01

- Check side clearance between inner gear/outer gear and pump body.

  **Side clearance between inner gear / outer gear and pump body**
  **Standard: 0.02 – 0.05 mm (0.0008 – 0.0020 in.)**
  **Service limit: 0.1 mm (0.0039 in.)**

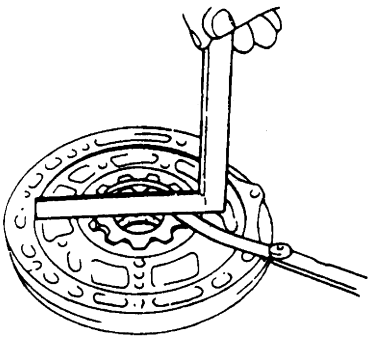

IYSQ01510118-01

- Measure inside diameter of oil pump body bushing. If inside diameter exceeds limit, replace oil pump body.

  **Oil pump body bushing inside diameter standard**
  **38.113 – 38.138 mm (1.5005 – 1.5014 in.)**

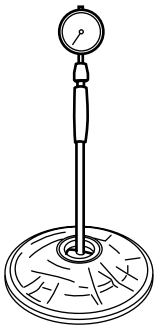

I4JA01512140-01

- Measure inside diameter of stator shaft assembly bushing.
  If inside diameter exceeds limit, replace stator shaft assembly.

  **Stator shaft assembly bushing inside diameter standard**
  **Front side (2): 21.501 – 21.527 mm (0.8465 – 0.8475 in.)**
  **Rear side (1): 23.025 – 23.051 mm (0.9065 – 0.9075 in.)**

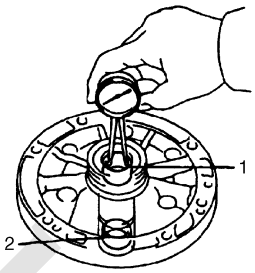


I5JB0A510148-01

www.cargeek.ir

 www.CarGeek.ir

## Overdrive (Planetary Gear Side) Components

S5JB0A5106071

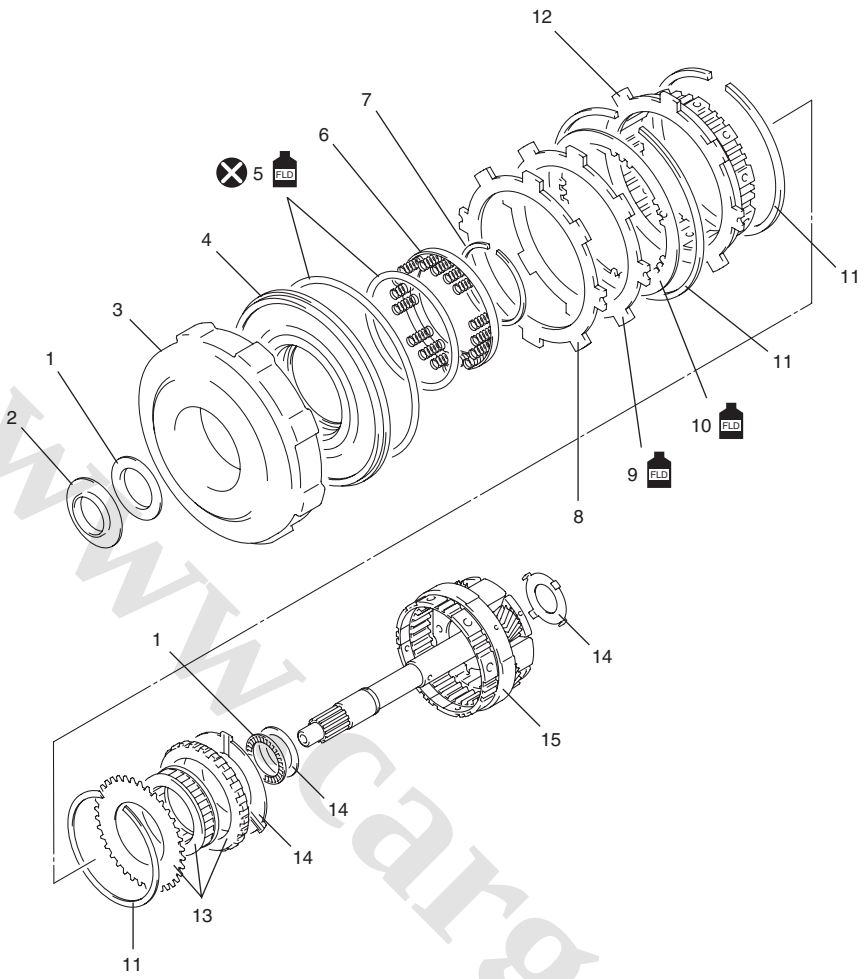


I5JB0A510096-01

| | | | | |
|---|---|---|---|---|
| 1. Bearing | 5. O-ring | 9. Clutch plate | 13. One-way clutch | FLD : Apply A/T fluid. |
| 2. Race | 6. Return spring | 10. Clutch disc | 14. Thrust washer | |
| 3. Clutch cylinder | 7. Snap ring | 11. Retaining ring | 15. O/D planetary gear | |
| 4. Clutch piston | 8. Cushion clutch plate | 12. Brake hub | ⊗ : Do not reuse. | |

## Overdrive (Planetary Gear Side) Disassembly and Assembly

S5JB0A5106072

### Disassembly

1) With overdrive (O/D) clutch cylinder (1) held stationary, turn O/D input shaft (2) clockwise to check that it turns smoothly and then counterclockwise to check that it locks.

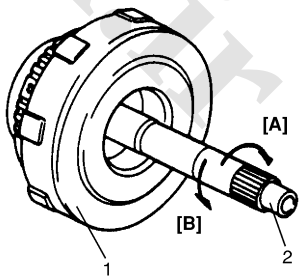


IYSQ01510120-01

| | |
|---|---|
| [A]: | Rotates |
| [B]: | Locks |

www.cargeek.ir

2) Remove O/D planetary gear assembly (1).

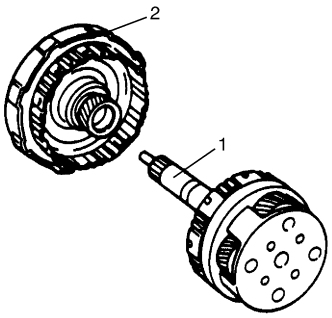


IYSQ01510121-01

| |
|---|
| 2. O/D clutch cylinder |

3) With O/D clutch assembly (2) installed to oil pump, apply compressed air (400 – 800 kPa, 4 – 8 kg/cm$^2$, 57 – 113 psi) to oil hole (3) in oil pump (1) and measure stroke of clutch piston. If it is not within standard range, replace cushion clutch plate or clutch disc.

**Standard stroke of clutch piston**
**1.74 – 2.44 mm (0.069 – 0.096 in.)**

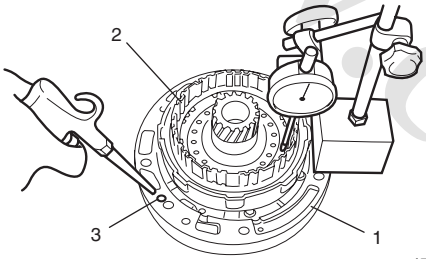


I5JB0A510097-01

4) Remove retaining ring (1) and then remove brake hub (2).

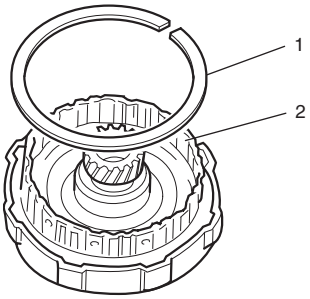


I5JB0A510098-01

5) Remove retaining ring (1) cushion plate (2), clutch plate (3) and clutch disc (4) in that order.

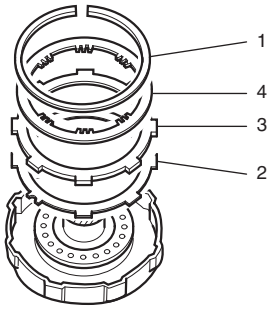


I5JB0A510099-01

6) With clutch piston return spring compressed with special tools, remove clutch piston return spring.

**Special tool**
**(A): 09918–48211**
**(B): 09926–98320**
**(C): 09918–48220**

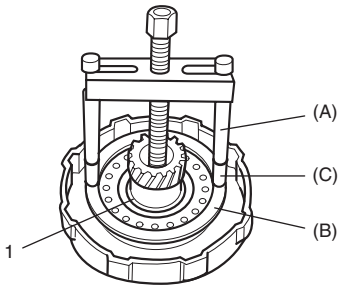


I5JB0A510100-01

| |
|---|
| 1. Snap ring |

7) Install O/D clutch cylinder to oil pump (2). Apply compression air into fluid hole (3) in oil pump (2) and remove clutch piston (1).

8) Remove piston inner O-ring and piston outer O-ring from clutch piston (1).

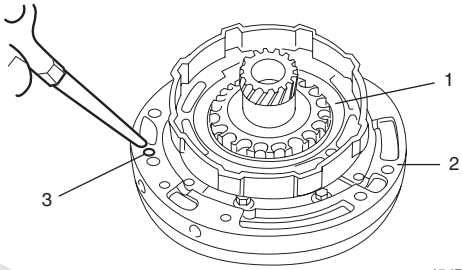


I5JB0A510101-01

9) Remove retaining ring from O/D planetary gear and then remove one-way clutch, thrust washer and thrust bearing.

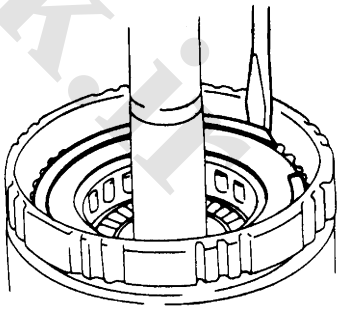

IYSQ01510127-01

www.cargeek.ir

 www.CarGeek.ir

### Assembly

Assemble each component by reversing removal procedure and noting the following points.

- When installing thrust washer (1), bring its oil groove (3) to the front.
- When installing one-way clutch to one-way clutch outer race, bring its flange (2) to the front.

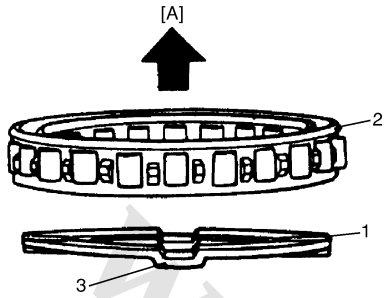


I5JB0A510154-02

| |
|---|
| [A]: Front |

- Before installing piston inner O-ring and piston outer O-ring, apply A/T fluid to them.
- Install so that snap opening and projection (1) of clutch piston return spring will not match.

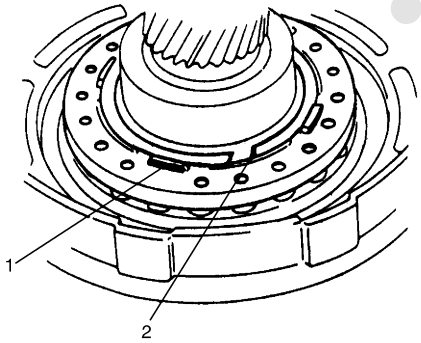


IYSQ01510129-01

| |
|---|
| 2. Slot |

- Install retaining clutch ring and retaining brake hub so that their slots (2) will not match with dent (1) in O/D clutch cylinder.

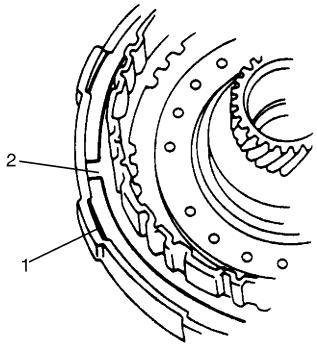


IYSQ01510130-01

- For installing cushion clutch plate (1), refer to the figure.

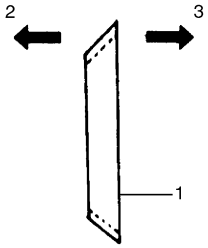


IYSQ01510131-01

| |
|---|
| 2. Clutch cylinder side |
| 3. Brake hub side |

## Overdrive (Planetary Gear Side) Inspection

S5JB0A5106073

- Check that sliding surface of discs and plate are not worn or burnt. if necessary, replace them.

**NOTE**

- **If disc lining is exfoliated, discolored or worn hardly, replace all discs.**
- **If only a part of printed numbers is corroded, replace all discs.**
- **Before assembling new discs, soak them in A/T fluid for at least 15 minutes.**

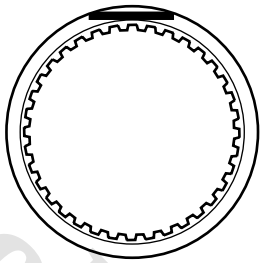

I4JA01512210-01

- Check that ball valve of clutch piston is not stuck.
- Check valve for leakage by applying low pressure air into ball valve hale.

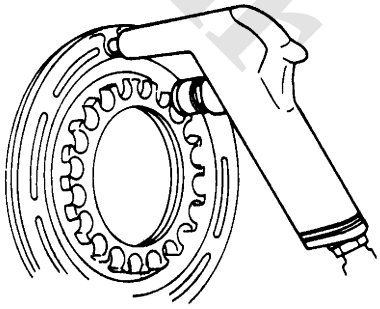

IYSQ01510132-01

www.cargeek.ir

- Measure free length of piston return spring.

  **Standard free length of O/D clutch piston return spring**
  **16.9 mm (0.665 in.)**

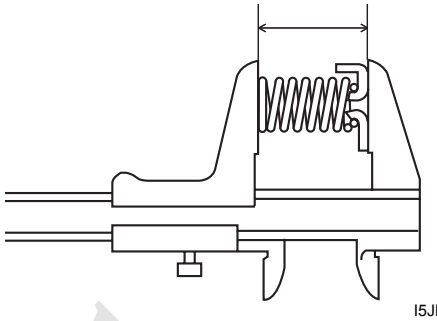

I5JB0A510171-01

- Measure inside diameter of planetary gear bushing. If inside diameter exceeds limit, replace planetary gear.

  **Planetary gear bushing inside diameter standard**
  **11.200 – 11.221 mm (0.4409 – 0.4418 in.)**

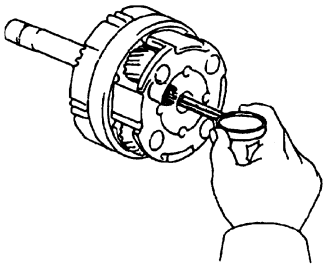

I5JB0A510149-01

## Overdrive (Case Side) Components

S5JB0A5106074

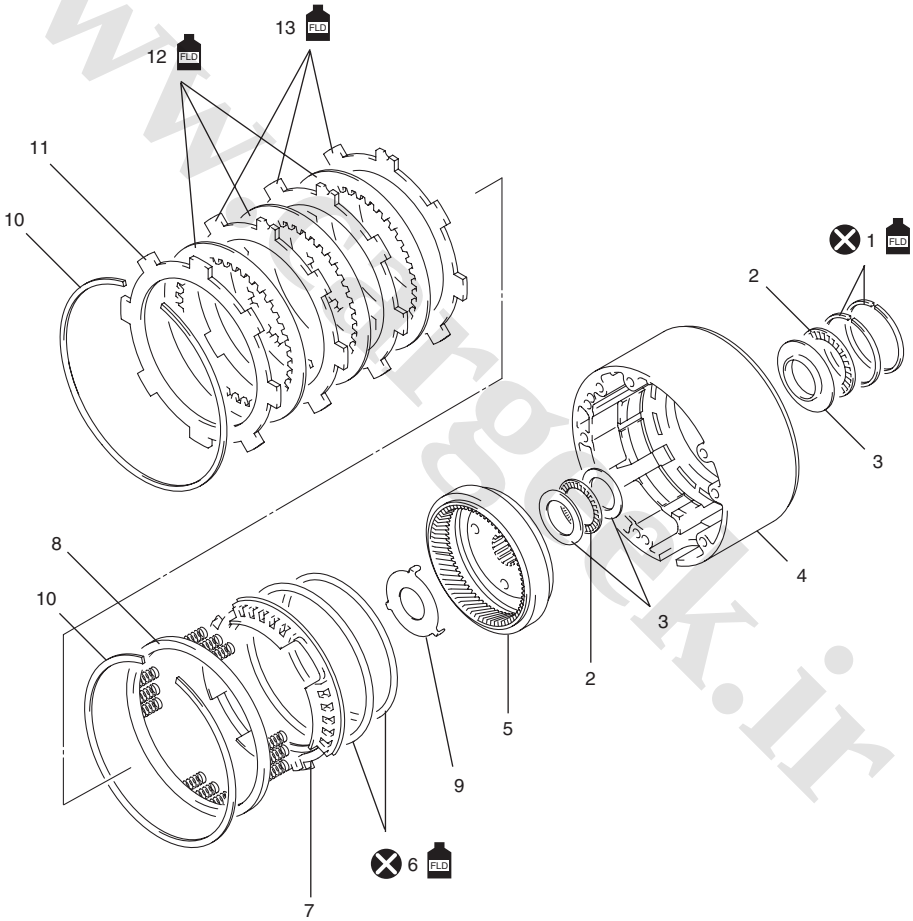


I5JB0A510103-01

| | | | | |
|---|---|---|---|---|
| 1. Sealing | 4. O/D case | 7. Brake piston | 10. Retaining ring | 13. Brake plate |
| 2. Bearing | 5. Planetary ring gear | 8. Return spring | 11. Brake backing plate | ⊗ : Do not reuse. |
| 3. Bearing race | 6. O-ring | 9. Thrust washer | 12. Brake disc | FLD : Apply A/T fluid. |

www.cargeek.ir

 www.CarGeek.ir

## Overdrive (Case Side) Disassembly and Assembly

S5JB0A5106075

### Disassembly

1) Remove retaining ring (1), brake backing plate (2), brake disc (3) and brake plate (4) in that order. Then remove planetary ring gear, thrust bearing race and thrust bearing.

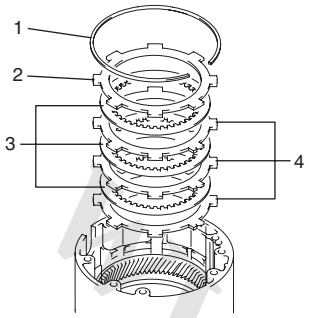


I5JB0A510104-01

2) Remove retaining ring and piston return spring using special tool and press (1).

**Special tool**
**(A): 09926–96510**

**⚠ CAUTION**

**Be careful when applying pressure, for overpressure will cause plate section of piston return spring to deform.**

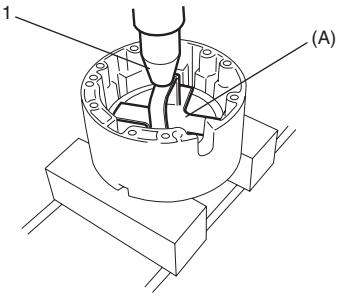


I5JB0A510105-01

3) Apply compressed air (400 – 800 kPa, 4 – 8 kg/cm$^2$, 57 – 113 psi) to oil hole (1) in O/D case (2) and remove brake piston.

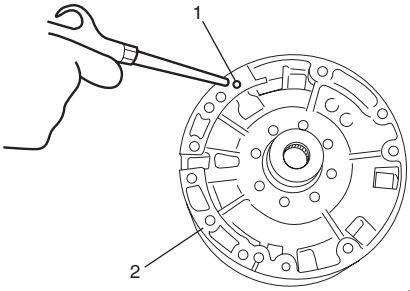


I5JB0A510106-01

4) Remove brake piston inner ring and brake piston outer ring from brake piston.
5) Unsnap seal ring (1).
6) Remove 2 seal rings (1).

**NOTE**

**Be careful not to open seal ring more than necessary.**

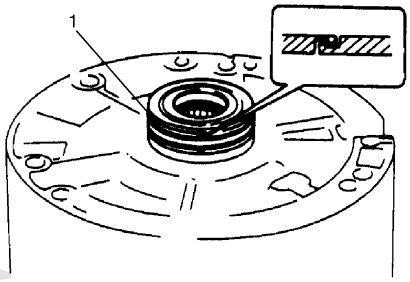


IYSQ01510138-01

www.cargeek.ir

### Assembly

Install each component by reversing removal procedure and noting the following points.

- When installing rear seal ring, use care not to open it too wide.
- Apply A/T fluid to O-ring, disc, etc. before installing them.
- Opening of retaining brake front ring (2) and projection (1) of O/D case should be matched.

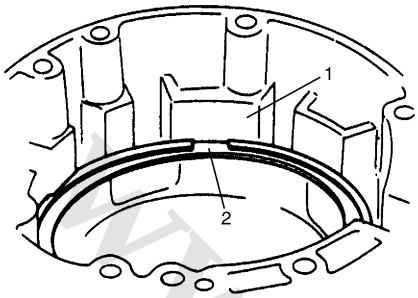


IYSQ01510139-01

- When installing each component, refer to “Overdrive (Case Side) Components: ”.
- Measure clearance between retaining ring (1) and brake backing plate (2) with thickness gauge.
  If the clearance is out of specification, select another plate with suitable thickness from the list below and replace it.

**Standard clearance between retaining ring and brake backing plate**
**0.40 – 1.38 mm (0.016 – 0.054 in.)**

| Thickness |
|---|
| 1.95 – 2.05 mm (0.077 – 0.081 in.) |
| 2.25 – 2.35 mm (0.089 – 0.093 in.) |

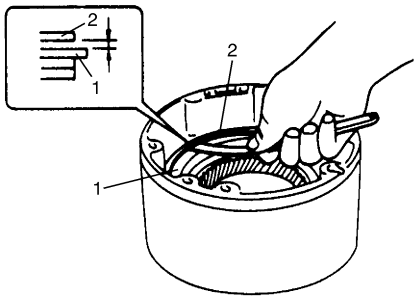


IYSQ01510134-01

## Overdrive (Case Side) Inspection

S5JB0A5106076

- Measure free length of piston return spring.

**Standard free length of O/D brake piston return spring**
**15.10 mm (0.594 in.)**

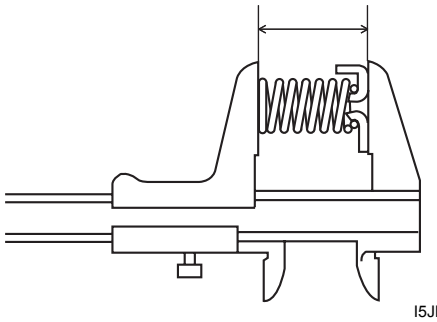

I5JB0A510171-01

- Check that sliding surface of discs and plate are not worn or burnt. If necessary, replace them.

**NOTE**

- **If disc lining is exfoliated, discolored or worn hardly, replace all discs.**
- **If only a part of printed numbers is corroded, replace all discs.**
- **Before assembling new discs, soak them in A/T fluid for at least 15 minutes.**

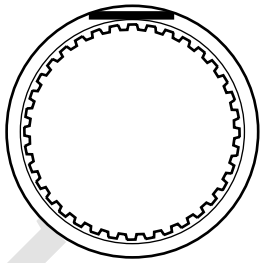

I4JA01512210-01

www.cargeek.ir

 www.CarGeek.ir

## Forward Clutch Components

S5JB0A5106077

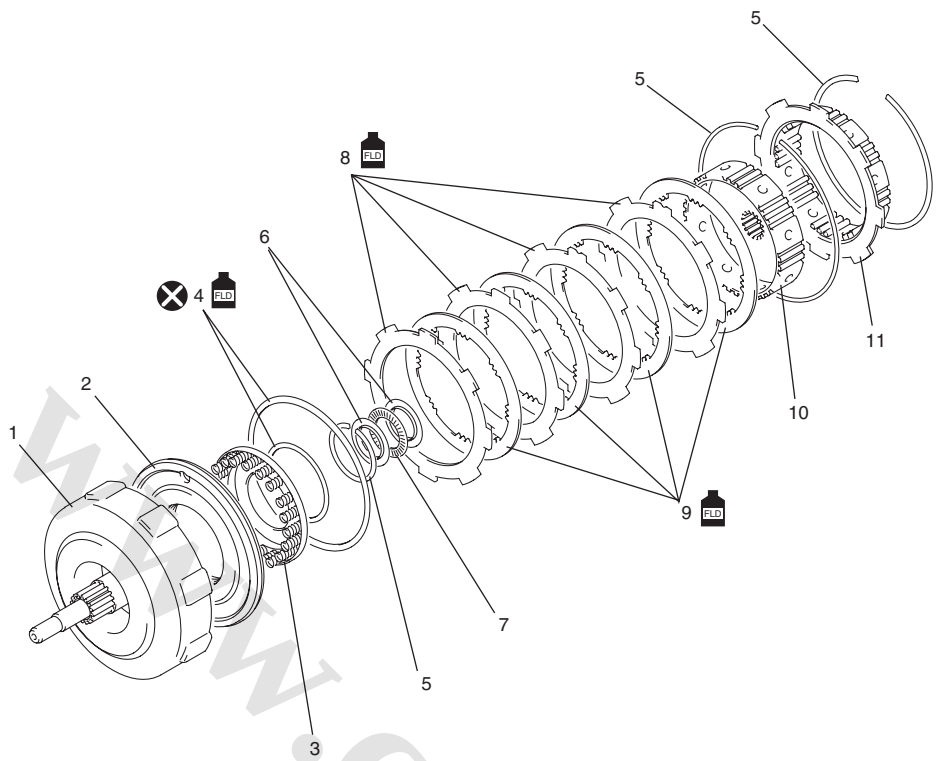


I5JB0A510108-01

| | | | |
|---|---|---|---|
| 1. Input shaft | 5. Retaining ring | 9. Clutch disc | : Apply A/T fluid. |
| 2. Piston | 6. Bearing race | 10. Froward clutch hub | |
| 3. Return spring | 7. Bearing | 11. Direct clutch hub | |
| 4. O-ring | 8. Clutch plate | : Do not reuse. | |

## Forward Clutch Disassembly and Assembly

S5JB0A5106078

### Disassembly

1) After removing retaining ring (1), remove direct clutch hub (2) and forward clutch hub (3).

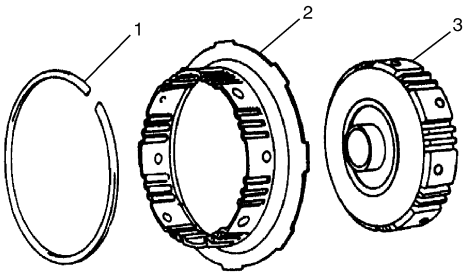


IYSQ01510143-01

2) Remove bearing race (1) and thrust bearing (2).

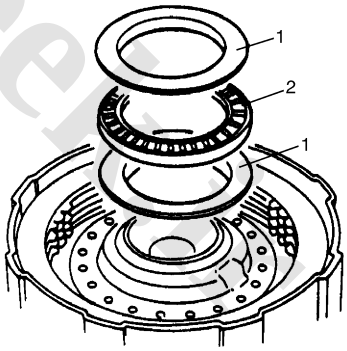


I5JB0A510109-01

3) Remove retaining ring (1) and then remove all clutch discs.

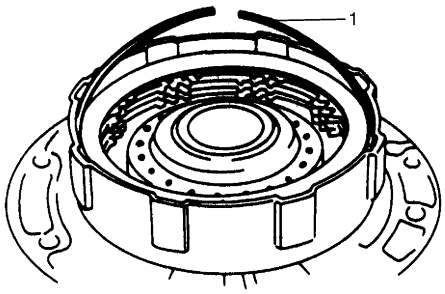


IYSQ01510147-01

www.cargeek.ir

4) Using special tool and hydraulic press, compress forward clutch piston return spring and remove retaining return spring.

**Special tool**
**(A): 09926–98310**

**⚠ CAUTION**

**Be careful when applying pressure, for overpressure will cause plate section of piston return spring to deform.**

5) Remove forward clutch piston return spring.

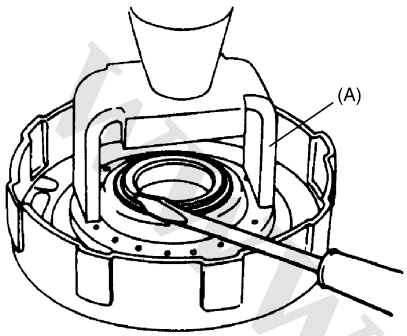


IYSQ01510148-01

6) Install forward clutch to O/D case (1). Blow low pressure air into fluid hole (2) at the right of cut in O/D case to remove forward clutch piston (3).

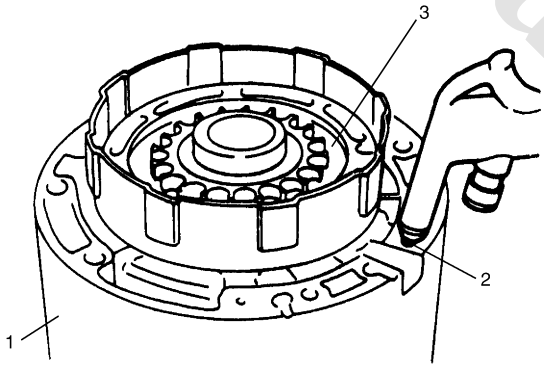


I5JB0A510110-01

**Assembly**

1) Apply A/T fluid to forward input shaft O-rings, install forward clutch piston and piston return spring (2) to forward input shaft and then install return spring ring with special tool and hydraulic press.

**Special tool**
**(A): 09926–98310**

**NOTE**

- **When installing return spring (2), be careful so that return spring will not fall or tilt.**
- **Do not align opening in retaining ring (1) with lug of forward clutch piston return spring at its retainer section.**

**⚠ CAUTION**

**Be careful when applying pressure, for overpressure will cause plate section of piston return spring to deform.**

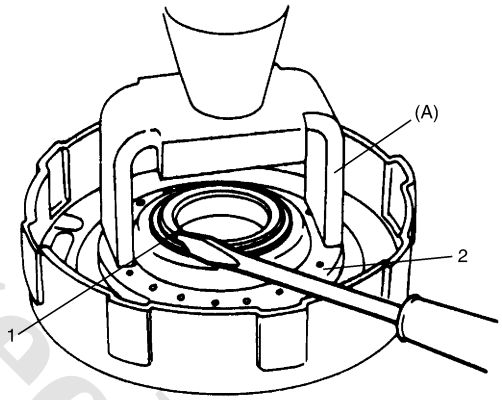


IYSQ01510150-01

2) Install clutch discs and plates and then install retaining clutch ring.

**NOTE**

- **Refer to "Forward Clutch Components: " when installing each component.**
- **Do not match opening in retaining clutch ring and dent in forward clutch input shaft.**

3) Install bearing races (1) and thrust bearing (2).

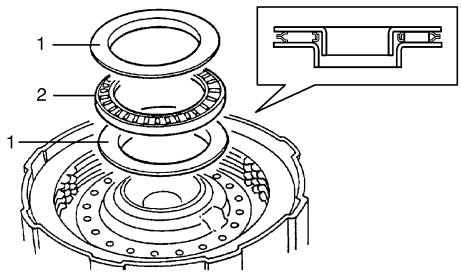


I5JB0A510111-01

www.cargeek.ir

 www.CarGeek.ir

4) Install forward clutch hub (3), direct clutch hub (2) and retaining ring (1) in that order.

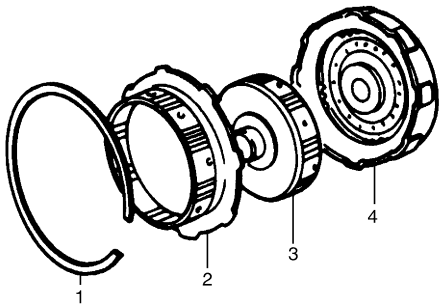


IYSQ01510151-01

| | |
|---|---|
| 4. | Input shaft |

5) Install forward clutch (2) to O/D case (1). Apply compressed air (400 – 800 kPa, 4 – 8 kg/cm$^2$, 57 – 113 psi) to oil hole at the right of cut in O/D case and measure movement of forward clutch piston.
If measured value is not within standard range, select another plate with suitable thickness from the list below and replace it.

| Thickness |
|---|
| 1.75 – 1.85 mm (0.069 – 0.073 in.) |
| 1.95 – 2.05 mm (0.077 – 0.081 in.) |

**Standard forward clutch piston movement**
**1.40 – 1.70 mm (0.055 – 0.067 in.)**

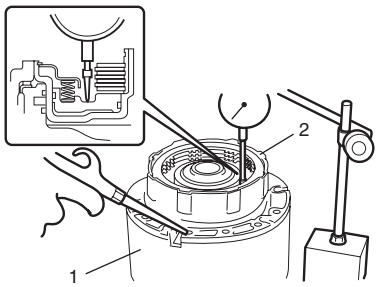


I5JB0A510150-01

## Forward Clutch Inspection

S5JB0A5106079

### Forward Clutch Piston

- Shake piston to check that ball is not stuck.
- Blow low pressure air to check ball section for leakage.

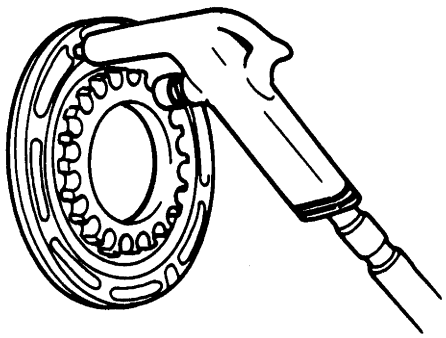

IYSQ01510152-01

### Forward Clutch Piston Return Spring

- Measure free length.

**Standard free length of forward clutch piston return spring**
**24.81 mm (0.977 in.)**

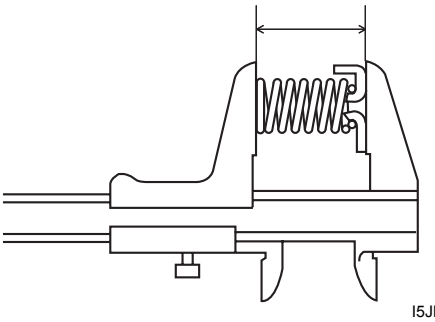

I5JB0A510171-01

### Clutch Plate and Disc

- Check that sliding surface of discs and plate are not worn or burnt. If necessary, replace them.

**NOTE**

- **If disc lining is exfoliated, discolored or worn hardly, replace all discs.**
- **If only a part of printed numbers is corroded, replace all discs.**
- **Before assembling new discs, soak them in A/T fluid for at least 15 minutes.**

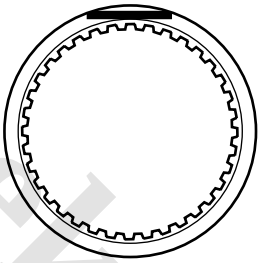

I4JA01512210-01

www.cargeek.ir

www.cargeek.ir

## Direct Clutch Components

S5JB0A5106080

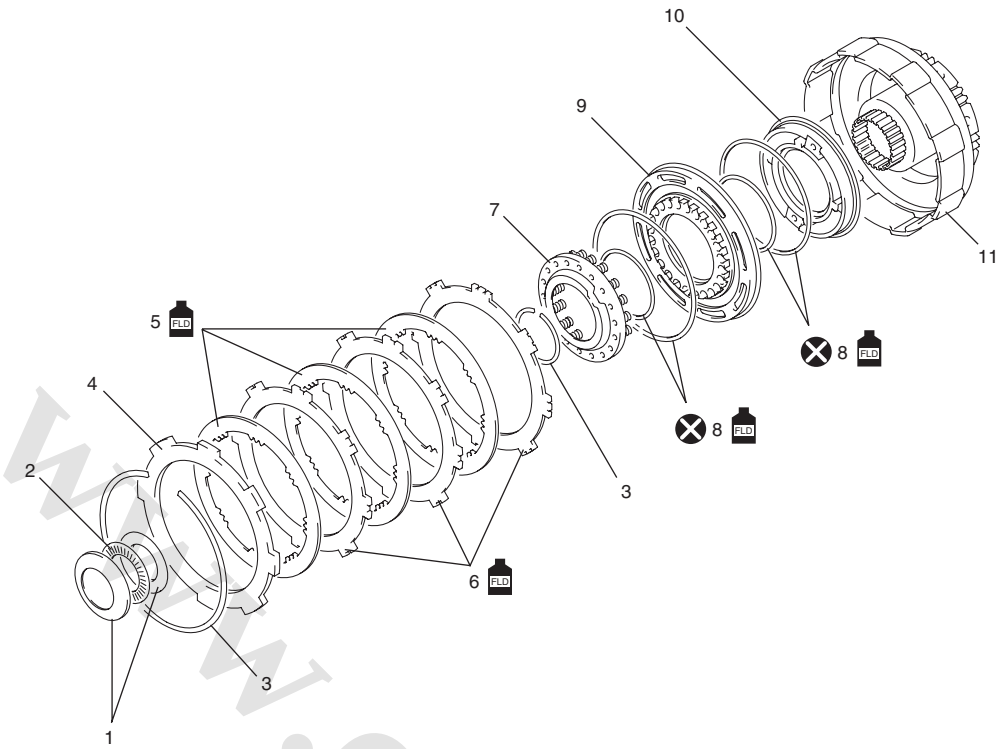


I5JB0A510112-01

| | | | |
|---|---|---|---|
| 1. Bearing race | 5. Clutch disc | 9. Direct clutch piston | : Apply A/T fluid. |
| 2. Bearing | 6. Clutch plate | 10. Direct clutch inner piston | |
| 3. Retaining ring | 7. Return spring | 11. Direct clutch cylinder | |
| 4. Clutch backing plate | 8. O-ring | : Do not reuse. | |

## Direct Clutch Disassembly and Assembly

S5JB0A5106081

### Disassembly

1) Remove direct clutch assembly from center support and then remove retaining ring.

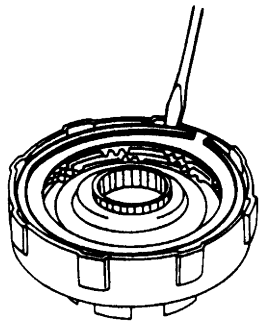

IYSQ01510156-01

2) Remove clutch backing plate (1) and then remove clutch disc (3) and clutch plate (2).

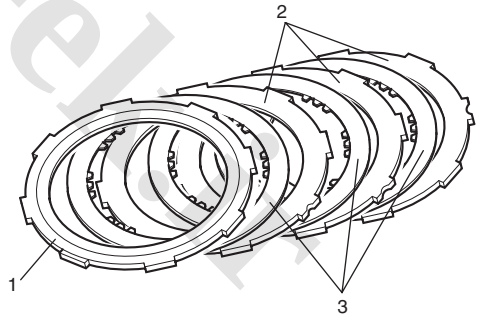


I5JB0A510114-01

www.cargeek.ir

 www.CarGeek.ir

3) Using special tool and hydraulic press (1), compress direct clutch piston return spring (3) and remove retaining return spring ring (2).

**Special tool**
**(A): 09926–98310**

**⚠ CAUTION**

**Be careful when applying pressure, for overpressure will cause plate section of piston return spring to deform.**

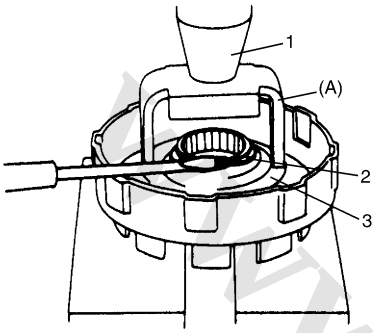


IYSQ01510158-01

4) Remove direct clutch piston return spring.
5) Install direct clutch cylinder to center support. Remove direct clutch piston by blowing air into the second hole from the left as shown in the figure. Also, remove direct clutch inner piston by blowing air into hole at the extreme right. And then remove O-rings from pistons.

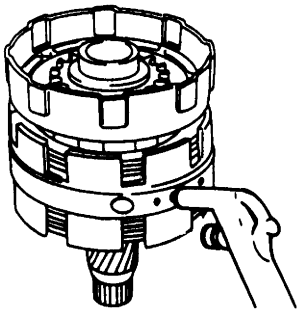

IYSQ01510159-01

**Assembly**

Assemble each component by reversing disassembly procedure and noting the following points.

- Always use new O-ring and apply A/T fluid before installation.
- Do not align opening in retaining ring (2) with lug of direct clutch piston return spring at retainer.

**Special tool**
**(A): 09926–98310**

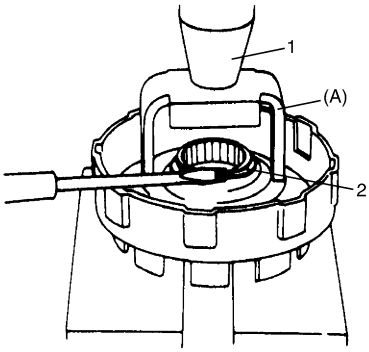


IYSQ01510160-01

| | |
|---|---|
| 1. | Hydraulic press |

- Use care so that direct clutch piston return spring will not fall or tilt.

**⚠ CAUTION**

**Be careful when applying pressure, for overpressure will cause plate section of piston return spring to deform.**

- Do not match opening (1) in retaining back plate ring with cutout (2) in direct clutch cylinder.

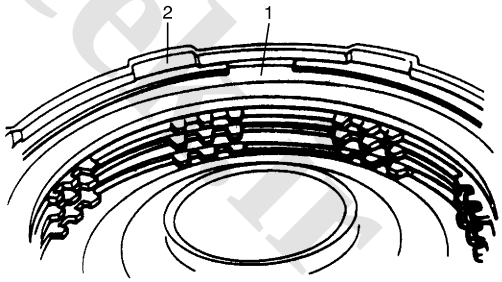


IYSQ01510161-01

- Install clutch backing plate with its grooved side (1) facing the front.

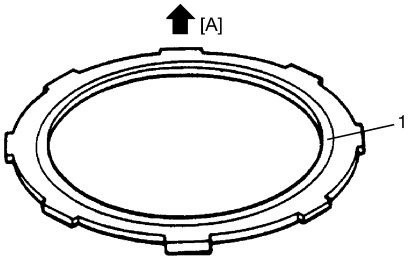


I5JB0A510115-01

| | |
|---|---|
| [A]: | Front |

www.cargeek.ir

- Install direct clutch assembly (1) to center support (2) and with compressed air (400 – 800 kPa, 4 – 8 kg/cm$^2$, 57 – 113 psi) applied to oil hole (3), measure stroke of direct clutch piston as shown in the figure. If it is not within standard range, select another plate with suitable thickness from the list below and replace it.

**Direct clutch piston standard stroke**
**0.90 – 1.30 mm (0.035 – 0.051 in.)**

| Identification No. | Thickness |
|---|---|
| No identification | 3.925 – 4.050 mm (0.155 – 0.159 in.) |
| “B” | 3.675 – 3.800 mm (0.145 – 0.150 in.) |
| “A” | 3.475 – 3.600 mm (0.137 – 0.142 in.) |

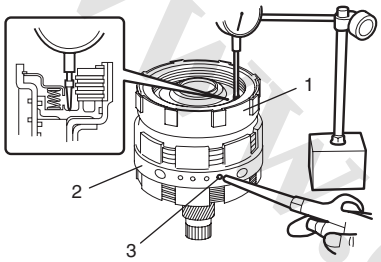

I5JB0A510113-01

## Direct Clutch Inspection

S5JB0A5106082

- Measure inside diameter of direct clutch cylinder bushing. If inside diameter exceeds limit, replace direct clutch cylinder.

**Direct clutch cylinder bushing inside diameter standard**
**23.062 – 23.088 mm (0.9080 – 0.9090 in.)**

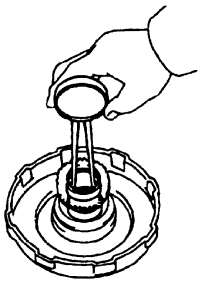
I5JB0A510156-01

### Direct Clutch Piston Return Spring

- Measure free length.

**Standard free length of direct clutch piston return spring**
**24.25 mm (0.955 in.)**

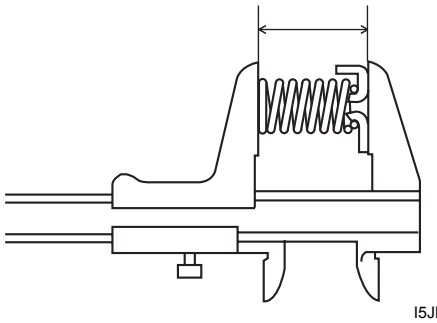
I5JB0A510171-01

### Direct Clutch Piston

- Shake piston to check that ball is not stuck.
- Apply air pressure and check that there is no leakage.

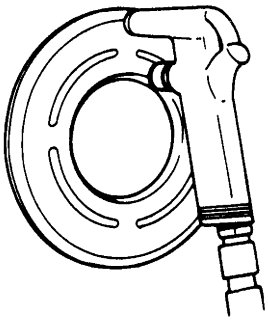
IYSQ01510163-01

### Clutch Disc and Plate

Check that sliding surface of discs and plate are not worn or burnt. if necessary, replace them.

**NOTE**

- **If disc lining is exfoliated, discolored or worn hardly, replace all discs.**
- **If only a part of printed numbers is corroded, replace all discs.**
- **Before assembling new discs, soak them in A/T fluid for at least 15 minutes.**

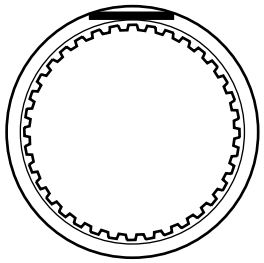
I4JA01512210-01

www.cargeek.ir

 www.CarGeek.ir

## Center Support Components

S5JB0A5106083

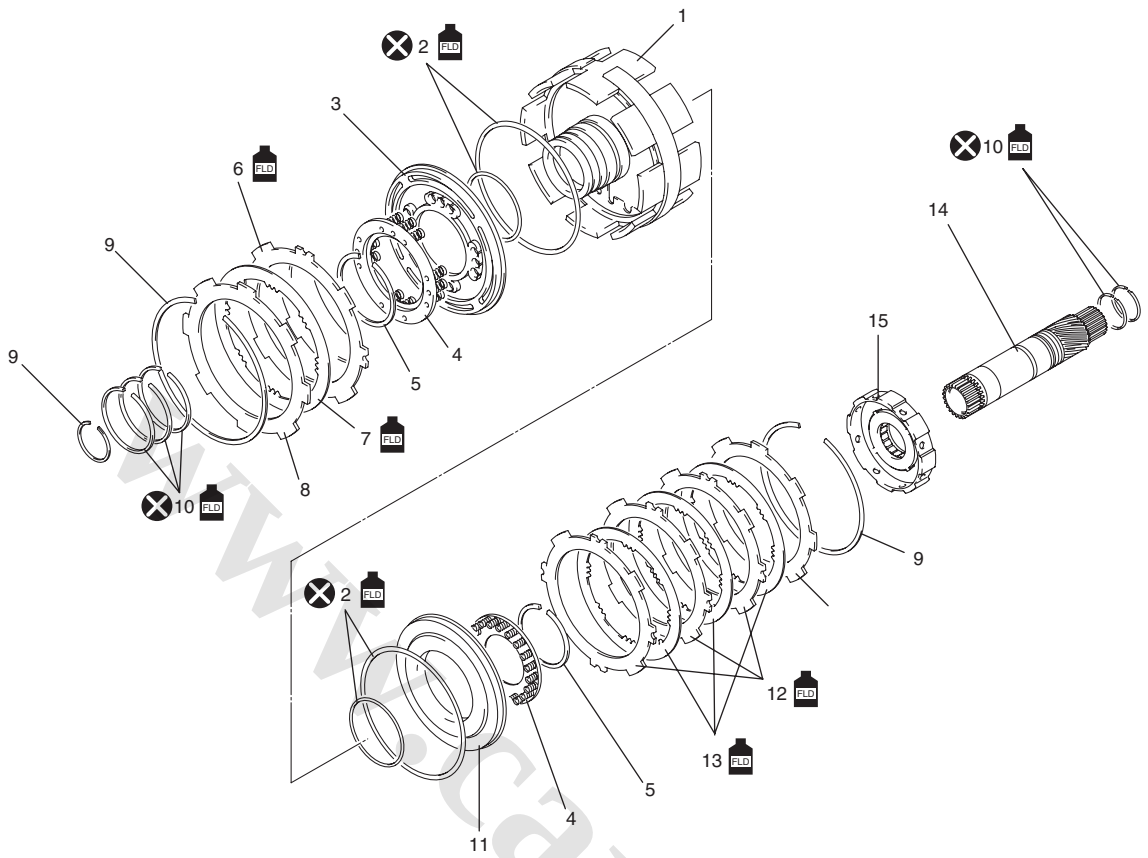


I5JB0A510116-01

| | | | |
|---|---|---|---|
| 1. Center support | 6. Second coast brake plate | 11. Second brake piston | ⊗ : Do not reuse. |
| 2. O-ring | 7. Second coast brake disc | 12. Second brake plate | FLD : Apply A/T fluid. |
| 3. Second coast brake piston | 8. Clutch backing plate | 13. Second brake disc | |
| 4. Piston return spring | 9. Retaining ring | 14. Planetary sun gear | |
| 5. Snap ring | 10. Seal ring | 15. Second brake hub assembly | |

www.cargeek.ir

## Center Support Disassembly and Assembly

S5JB0A5106084

### Disassembly

1) Remove retaining ring.

**Special tool**
**(A): 09920–76010**

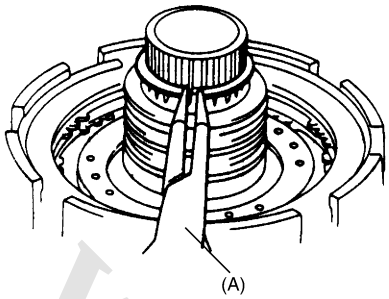


IYSQ01510165-01

2) Pull out center support assembly (2) from planetary sun gear (1).

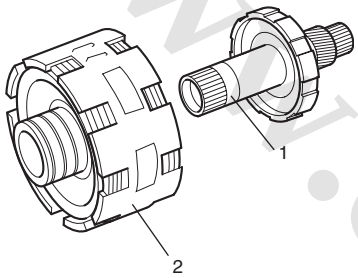


I5JB0A510117-01

3) Apply compressed air (400 – 800 kPa, 4 – 8 kg/cm$^2$, 57 – 113 psi) to oil hole (1) at the extreme left and measure movement of second coast brake (Second coast brake) piston.
If measured value is not within standard range, replace second coast brake plate or second coast brake disc.

**Standard second coast brake piston movement**
**0.75 – 1.35 mm (0.030 – 0.053 in.)**

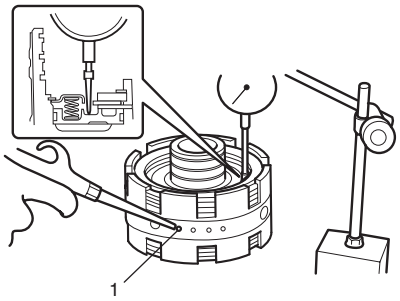


I5JB0A510118-01

4) Remove retaining ring.

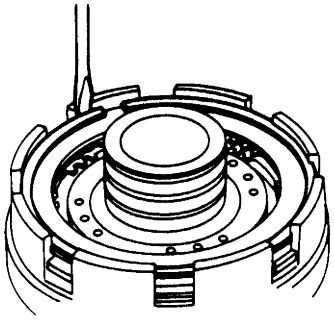

IYSQ01510168-01

5) After removing clutch backing plate (1), remove second coast brake plate (3) and second coast brake disc (2).

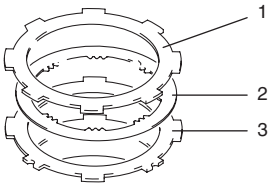


I5JB0A510119-02

6) Using special tool and hydraulic press, compress piston return spring and remove snap ring.

**⚠ CAUTION**

**Be careful when applying pressure, for overpressure will cause plate section of piston return spring to deform.**

**Special tool**
**(A): 09926–98310**

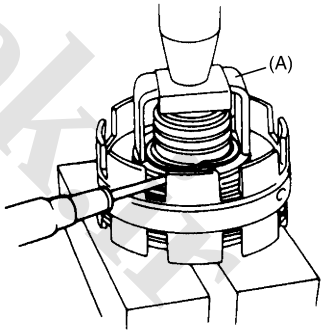


IYSQ01510170-01

7) Remove brake piston return spring (1).

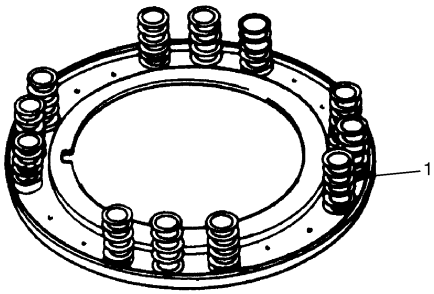


IYSQ01510171-01

www.cargeek.ir

 www.CarGeek.ir

8) Apply compressed air (400 – 800 kPa, 4 – 8 kg/cm$^2$, 57 – 113 psi) to oil hole at the extreme left and remove second coast brake piston as shown in the figure. Then remove piston inner O-ring and piston outer O-ring from second coast brake piston.

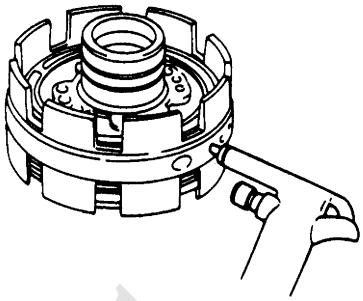

IYSQ01510172-01

9) Remove 3 seal rear rings (1).

**NOTE**

**Use care not to open ring more than necessary.**

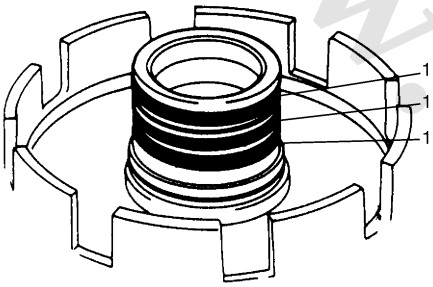


IYSQ01510173-01

10) Apply compressed air (400 – 800 kPa, 4 – 8 kg/cm$^2$, 57 – 113 psi) to second hole (1) from the left and measure stroke of second brake (Second brake) piston as shown in the figure.
If measured value is not within standard range, replace second brake plate or second brake disc.

**Standard second brake piston stroke**
**0.97 – 1.70 mm (0.038 – 0.067 in.)**

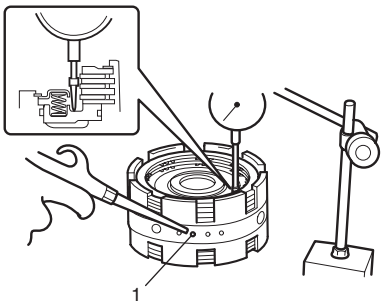


I5JB0A510120-01

11) After removing retaining back plate ring, remove clutch backing plate, second brake plates and second brake discs.

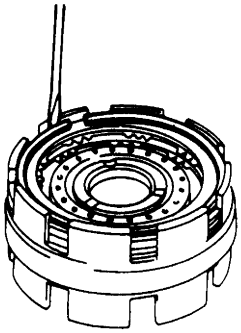

IYSQ01510175-01

12) Using special tool and hydraulic press, compress brake piston return spring and remove snap second coast brake ring.

**⚠ CAUTION**

**Be careful when applying pressure, for overpressure will cause plate section of piston return spring to deform.**

**Special tool**
**(A): 09926–98310**

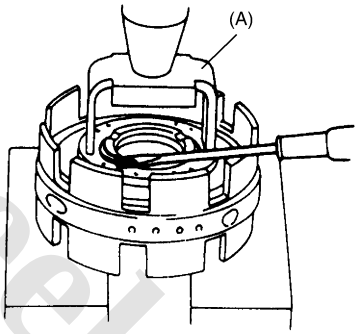


IYSQ01510176-01

13) Remove brake piston return spring.

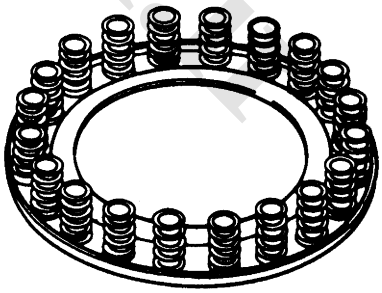

IYSQ01510177-01

www.cargeek.ir

14) Blow air into the second air hole from the left and remove second brake piston. Then remove piston inner O-ring and piston outer O-ring from second brake piston.

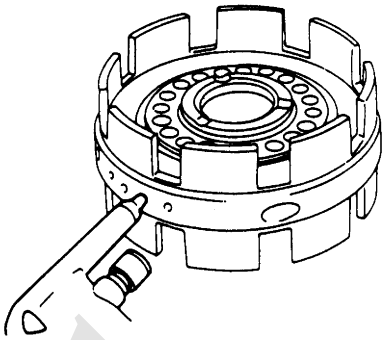

IYSQ01510178-01

15) With second brake hub assembly (3) held stationary, turn planetary sun gear (4) clockwise to check that it locks and then counterclockwise to check that it turns smoothly.

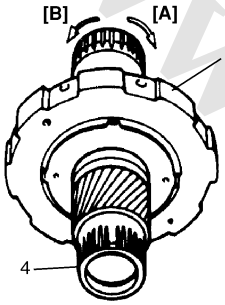


IYSQ01510179-01

| | |
|---|---|
| [A]: | Locks |
| [B]: | Turns |

16) Remove second brake hub assembly (1) from planetary sun gear (2).

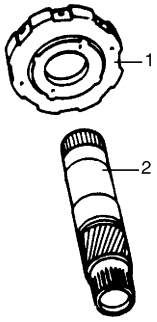


IYSQ01510180-01

17) Remove 2 sun gear seal rings (1) from planetary sun gear.

**NOTE**

**Use care not to open sun gear seal ring more than necessary.**

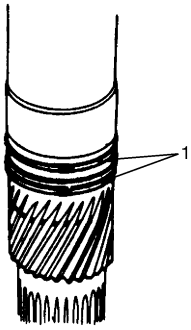


IYSQ01510181-01

## Assembly

Assemble components by reversing disassembly procedure and noting the following points.

- Snap both ends of sun gear seal ring (1) securely.

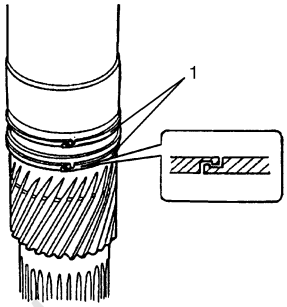


I5JB0A510121-01

- Do not open sun gear seal ring more than necessary.
- Always use new O-ring and apply A/T fluid before installation.
- When installing O-ring, make sure that it is not kinked or caught.
- Push in brake piston horizontally.
- When installing brake piston return spring, be careful so that spring will not fall or tilt.
- When installing snap ring, do not align lug (1) of retainer with opening in snap ring (2).

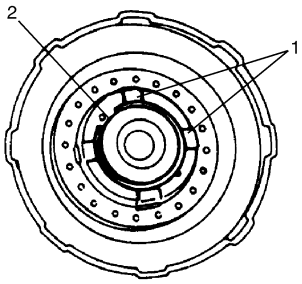


IYSQ01510182-01

www.cargeek.ir

 www.CarGeek.ir

- When installing brake discs, brake plates and clutch backing plate, refer to “Center Support Components: ”.
- Install clutch backing plate (1) with its flat side facing brake disc.

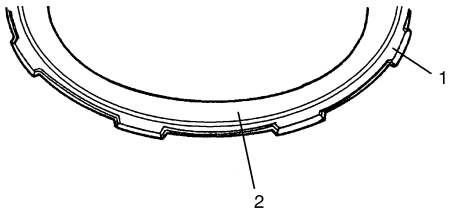


I5JB0A510122-01

| 2. Step |
|---|

- After installing each retaining backing plate ring, measure movement of brake piston again.
  If it is not within standard range, it is possible that ring is not installed properly. Then disassemble and reassemble again.

  **Standard movement of second coast brake piston and second brake piston**
  **Second coast brake piston: 1.00 – 1.20 mm (0.039 – 0.047 in.)**
  **Second brake piston: 1.01 – 2.25 mm (0.040 – 0.089 in.)**

## Center Support Inspection

S5JB0A5106089

- Check that sliding surface of discs and plate are not worn or burnt. If necessary, replace them.

**NOTE**

- **If disc lining is exfoliated, discolored or worn hardly, replace all discs.**
- **If only a part of printed numbers is corroded, replace all discs.**
- **Before assembling new discs, soak them in A/T fluid for at least 15 minutes.**

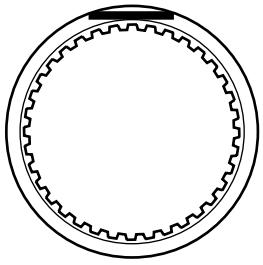

I4JA01512210-01

- Measure inside diameter of center support hub bushing. If inside diameter exceeds limit, replace center support.

  **Center support bushing inside diameter standard**
  **36.386 – 36.411 mm (1.4325 – 1.4335 in.)**

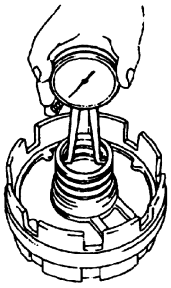

I5JB0A510123-01

- Measure inside diameter of planetary sun gear bushing. If inside diameter exceeds limit, replace planetary sun gear.

  **Planetary sun gear bushing inside diameter standard**
  **21.501 – 21.527 mm (0.8465 – 0.8475 in.)**

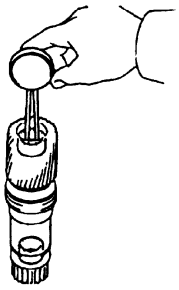

I5JB0A510124-01

- Measure free length of piston return spring.

  **Standard free length of second coast brake piston return spring**
  **16.84 mm (0.663 in.)**

  **Standard free length of second brake piston return spring**
  **15.82 mm (0.623 in.)**

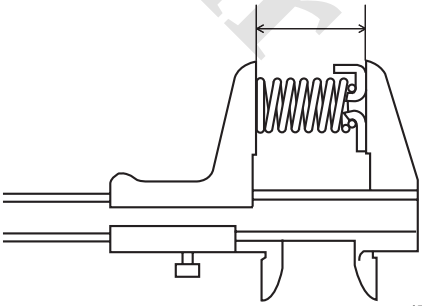

I5JB0A510171-01

www.cargeek.ir

## Planetary Gears and Output Shaft Components

S5JB0A5106085

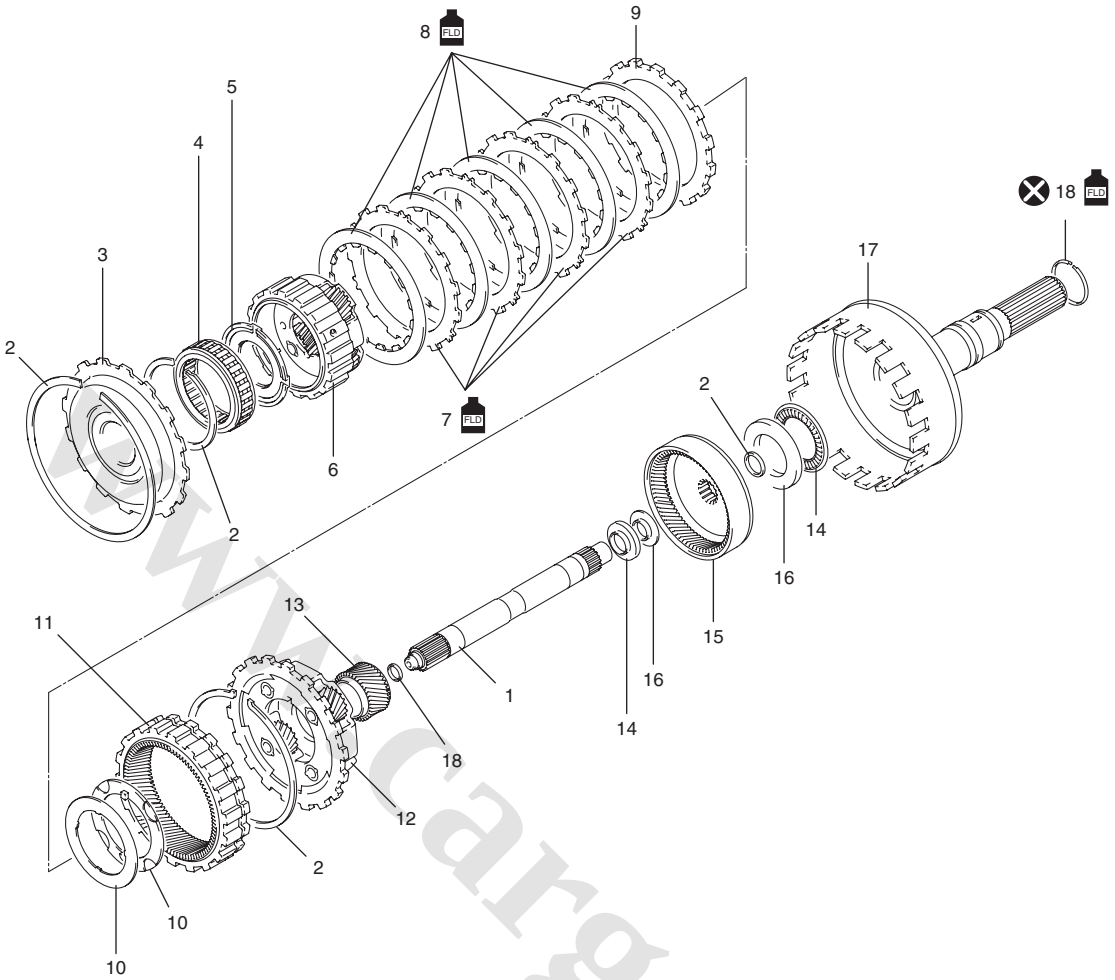


I5JB0A510125-01

| | | | |
|---|---|---|---|
| 1. Inner shaft | 6. Front planetary gear | 11. Front planetary ring gear | 16. Bearing race |
| 2. Retaining ring | 7. Reverse brake plate | 12. Rear planetary gear | 17. Output shaft assembly |
| 3. Reverse brake reaction plate | 8. Reverse brake disc | 13. Planetary sun gear | 18. Seal ring |
| 4. One-way clutch | 9. Reverse brake backing plate | 14. Bearing | FLD : Apply A/T fluid. |
| 5. One-way clutch thrust washer | 10. Thrust washer | 15. Rear planetary ring gear | |

www.cargeek.ir

 www.CarGeek.ir

## Planetary Gears and Output Shaft Disassembly and Assembly

S5JB0A5106086

### Disassembly

1) Remove front planetary gear assembly (1) from output shaft assembly (2).

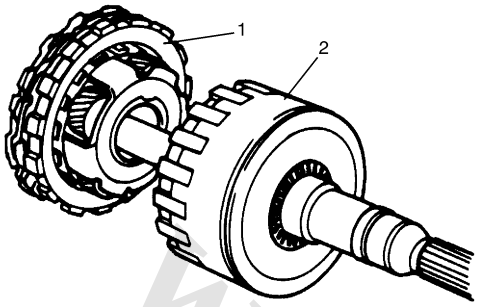


IYSQ01510185-01

2) Remove rear planetary thrust washer (1), reverse brake backing plate (2), reverse brake disc (3) and reverse brake plate (4) from front planetary gear assembly.

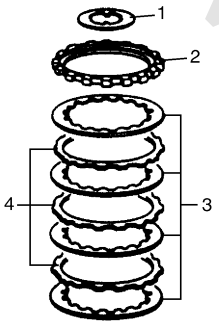


IYSQ01510186-01

3) Remove reverse brake reaction plate (2) from front planetary gear (1).

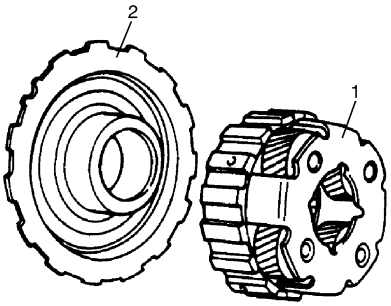


IYSQ01510187-01

4) After removing retaining ring (1), remove one-way clutch (2) and one-way clutch rear thrust washer (3).

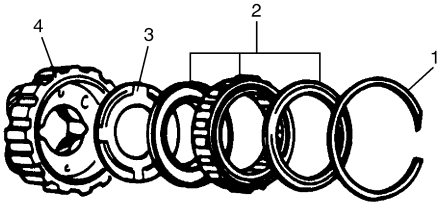


IYSQ01510188-01

| |
|---|
| 4. Front planetary gear |

5) After removing retaining ring (1), remove front planetary ring gear (2), thrust bearing and bearing race.

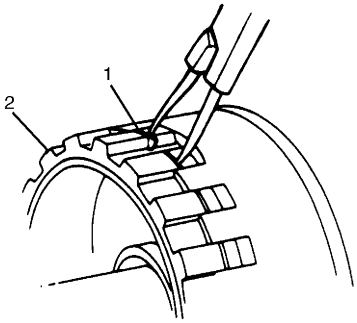


IYSQ01510189-01

6) Remove thrust washer (1), rear planetary gear (2) and rear planetary sun gear (3).

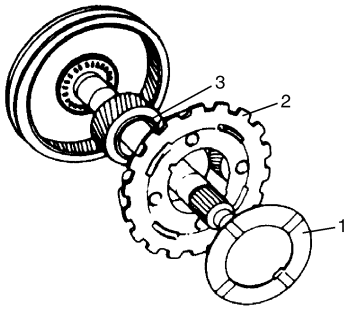


IYSQ01510190-01

7) After removing retaining ring (2) from inner shaft (1), remove rear planetary ring gear (3) and thrust bearing assembly.

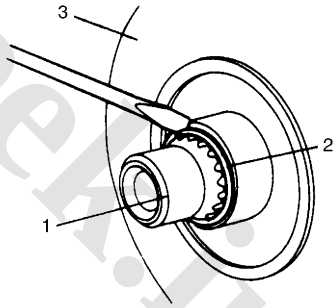


IYSQ01510191-01

### Assembly

Assemble components by reversing disassembly procedure and noting the following points.

- Refer to “Planetary Gears and Output Shaft Components: ” when installing each component.
- Check seal ring for damage before installation and replace if damaged.
- Install planetary sun gear as shown in the figure.

www.cargeek.ir

**NOTE**

**A is longer than B.**

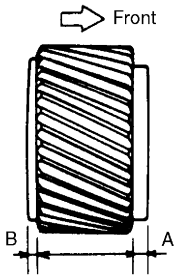


I5JB0A510155-01

- Fit retaining rings into groove securely.
- Install one-way clutch as shown in the figure.

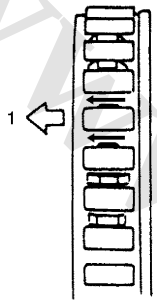


IYSQ01510193-01

| | |
|---|---|
| 1. | Front planetary gear side |

- Install reverse brake reaction plate (2) to front planetary gear (1).
  With reverse brake reaction plate (2) fixed stationary, turn front planetary gear (1) clockwise to check that it locks and then counterclockwise to check that it turns smoothly.

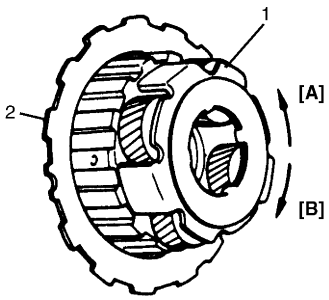


IYSQ01510194-01

| | |
|---|---|
| [A]: | Rotates |
| [B]: | Locks |

## Planetary Gears and Output Shaft Inspection

S5JB0A5106090

- Check that sliding surface of discs and plate are not worn or burnt. if necessary, replace them.

**NOTE**

- **If disc lining is exfoliated, discolored or worn hardly, replace all discs.**
- **If only a part of printed numbers is corroded, replace all discs.**
- **Before assembling new discs, soak them in A/T fluid for at least 15 minutes.**

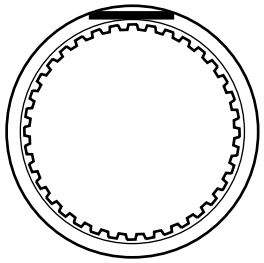

I4JA01512210-01

- Measure inside diameter of output shaft bushing. If inside diameter exceeds limit, replace output shaft.

**Output shaft bushing inside diameter standard**
**18.001 – 18.026 mm (0.7087 – 0.7097 in.)**

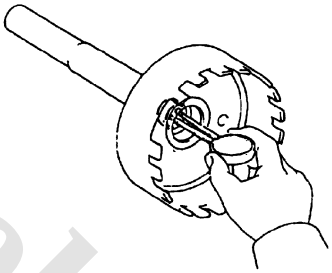

I5JB0A510126-01

www.cargeek.ir

 www.CarGeek.ir

## Valve Body Assembly Components

S5JB0A5106087

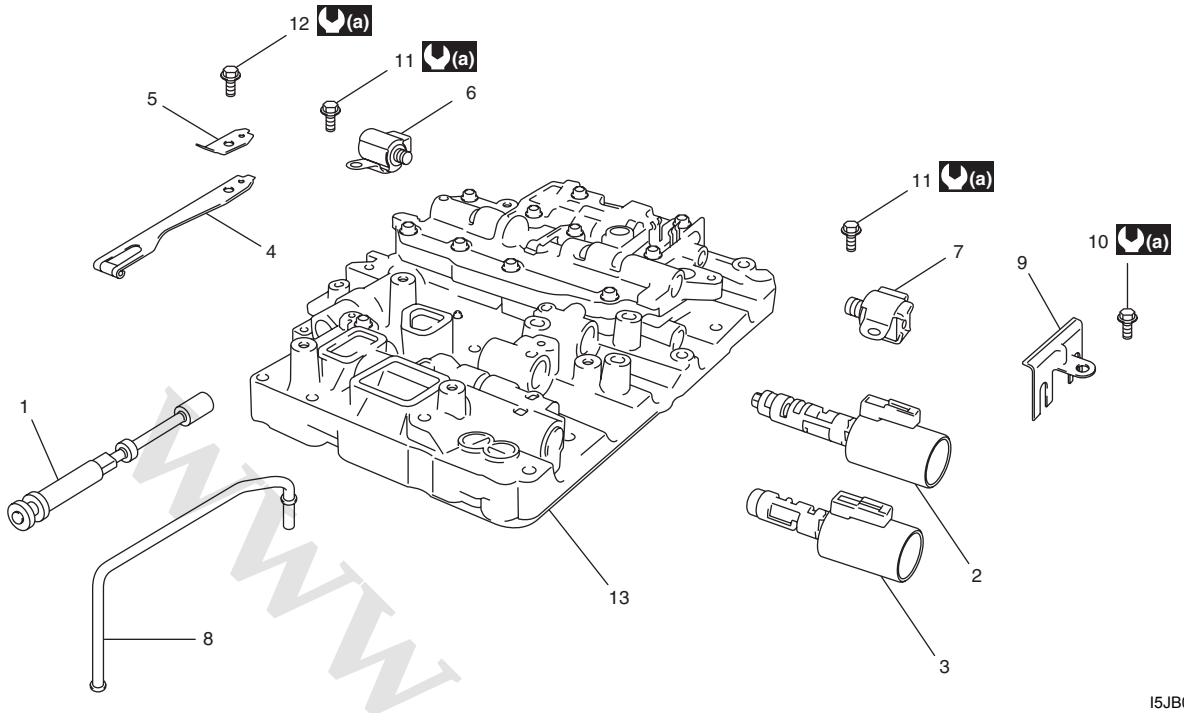


I5JB0A510127-01

| | | | |
|---|---|---|---|
| 1. Manual valve | 5. Plate | 9. Solenoid clamp | 13. Valve body assembly |
| 2. TCC control solenoid valve | 6. Shift solenoid valve A | 10. Solenoid clamp bolt | (a) : 5.5 N·m (0.55 kgf-m, 4.0 lb-ft) |
| 3. Pressure control solenoid valve | 7. Shift solenoid valve B | 11. Shift solenoid bolt | |
| 4. Detent spring | 8. Over drive (O/D) brake apply tube | 12. Detent spring bolt | |

## Automatic Transmission Unit Assembly

S5JB0A5106088

**⚠ CAUTION**

**When replacing pressure control solenoid valve and/or TCC pressure control solenoid valve, it is strictly required to replace it together with valve body assembly as a set. Replacing pressure control solenoid valve and/or TCC pressure control solenoid valve independently may cause excessive shift shock.**

1) Measure inside diameter of transmission case bushing. If inside diameter exceeds limit, replace transmission case.

**Transmission case bushing inside diameter standard**
**38.113 – 38.138 mm (1.5005 – 1.5015 in.)**

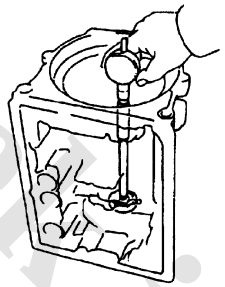

I5JB0A510129-01

2) After applying A/T fluid to new O-rings, install them to reverse brake piston (3), reaction sleeve (2) and secondary reverse piston (1).

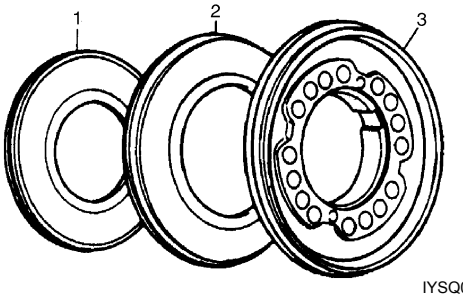


IYSQ01510236-01

www.cargeek.ir

3) Measure free length of reverse brake piston return spring.

**Standard free length of reverse brake piston return spring**
**16.84 mm (0.663 in.)**

4) Install reverse brake piston assembly and brake piston return spring to transmission case, using care not to damage O-ring. Then install snap ring (1) with special tools.

**NOTE**

- **Install so that opening in snap ring (1) will not align with any of 3 lugs of spring seat.**
- **Do not compress spring more than necessary and do not allow it fall or tilt.**

**Special tool**
**(A): 09926–98320**
**(B): 09926–98390**
**(C): 09944–88210**

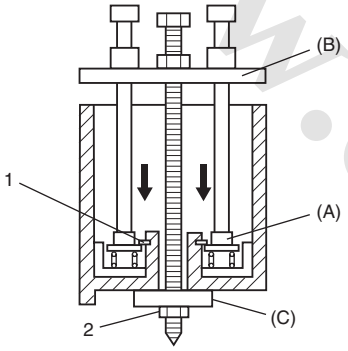


I5JB0A510128-01

| | |
|---|---|
| 2. Nut M12 x 1.75 | |

5) Prepare a stand as shown. It is necessary because work will be done with transmission case (1) set upright from this step on.

**NOTE**

- **To protect transmission case against damage, spread cloth on stand where case contacts.**
- **A stand of such size as shown in the figure will facilitate work.**

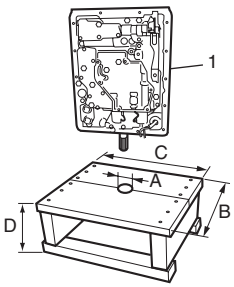


I5JB0A510079-01

| | |
|---|---|
| A: 50 mm (1.9 in.) | C: 400 mm (15.7 in.) |
| B: 350 mm (13.8 in.) | D: 200 mm (7.9 in.) |

6) Install thrust bearing (1) and thrust bearing race (2) after lubricating them with grease.

**NOTE**

**Make sure that thrust bearing output shaft race is installed in proper direction.**

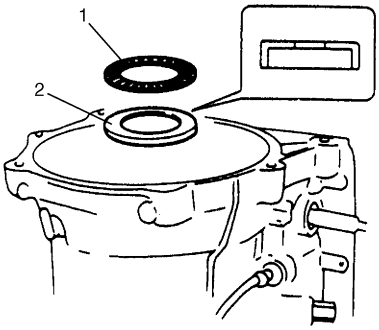


I5JB0A510160-01

7) Install brake applying tube (1) so that its lug (2) fits in a in transmission case (4). After installation, check that 4 lugs (3) along the underside of brake applying tube fit inside of reverse brake piston.

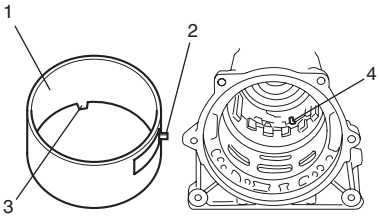


I5JB0A510130-02

8) Install leaf spring (1) as shown in figure.

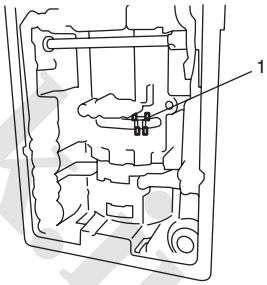


I5JB0A510131-02

www.cargeek.ir

 www.CarGeek.ir

9) Remove reverse brake reaction plate of planetary gear assembly and align lugs of reverse brake plate, reverse brake disc and reverse brake backing plate. Install planetary gear assembly to transmission case so that aligned lugs fit in groove in transmission case.

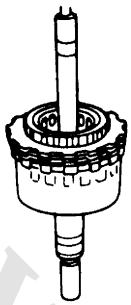

IYSQ01510241-01

10) Measure clearance between reverse brake plate and lugs of transmission case.
If measured value is less than standard range, it is possible that something is installed improperly or dust or fluid is on reverse brake disc, etc. If it exceeds standard range, adjust it to standard clearance with selective reverse brake backing plates as shown after making sure reverse brake disc, reverse brake plate and reverse brake backing plate are in good condition. If the clearance is out of specification, select another plate with suitable thickness from the list below and replace it.

**Standard clearance between reverse brake plate and lugs of transmission case**
**0.52 – 1.27 mm (0.020 – 0.050 in.)**

**Available plate thickness**

| Identification No. | Thickness |
|---|---|
| No identification | 2.95 – 3.05 mm (0.116 – 0.120 in.) |
| “325” | 3.20 – 3.30 mm (0.126 – 0.120 in.) |
| “350” | 3.45 – 3.55 mm (0.136 – 0.140 in.) |
| “375” | 3.70 – 3.80 mm (0.146 – 0.150 in.) |
| “400” | 3.95 – 4.05 mm (0.156 – 0.159 in.) |
| “425” | 4.20 – 4.30 mm (0.165 – 0.169 in.) |

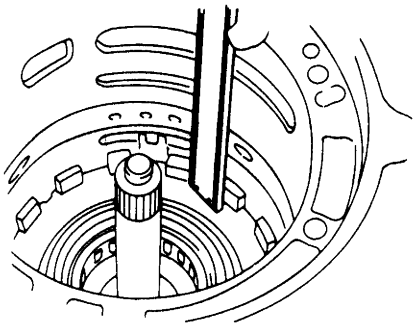

IYSQ01510242-01

11) Install reverse brake reaction plate so that its lug with dent (1) comes to specified position as shown in figure.

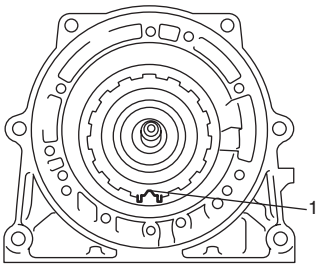


I5JB0A510132-01

12) Using screwdriver with vinyl tape or the like wound at its tip, install retaining reaction plate ring (1). After installation, check that ring is in groove securely.

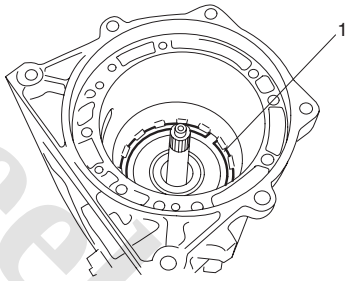


I5JB0A510084-01

www.cargeek.ir

13) After confirming that lugs of all brake plates and brake discs are in grooves securely, hold retaining ring (1) of planetary sun gear, install center support assembly by aligning bolt holes (2) in center support and transmission case.

**NOTE**

**Unless retaining ring of planetary sun gear is held, brake valve gets off center support and that will make it impossible to align fluid holes with bolt holes.**

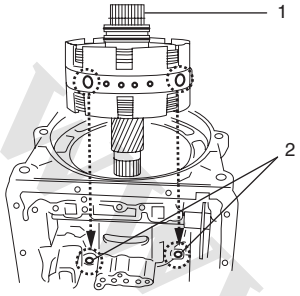


I5JB0A510133-01

14) Tighten center support bolts by certain amount at a time till specified tightening torque is obtained.

**Tightening torque**
**Center support bolt: 26 N·m (2.6 kgf-m, 19.0 lb-ft)**

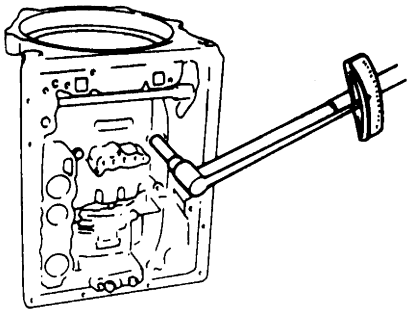

IYSQ01510246-01

15) Install direct clutch assembly by aligning splines in direct clutch cylinder with planetary sun gear.

**NOTE**

**Ends of splines in direct clutch cylinder and planetary sun gear should come almost in match.**

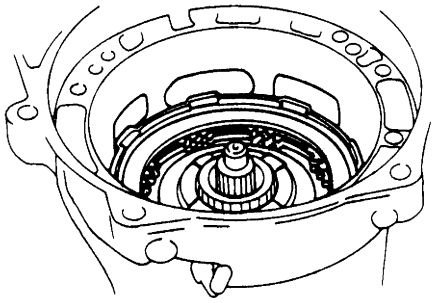

IYSQ01510247-01

16) Apply grease to thrust bearing (1) and bearing races (2), and then install them to direct clutch.

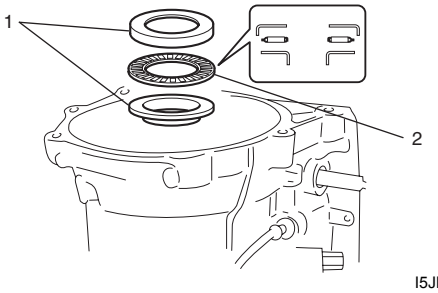


I5JB0A510134-01

17) Install forward clutch assembly by putting all lugs of direct clutch disc hub together and matching them with groove cut in direct clutch input hub, and at the same time aligning splines in forward clutch hub with inner shaft.

**NOTE**

**Use care not to let forward clutch rear No.1 race and thrust bearing installed to forward clutch hub fall off.**

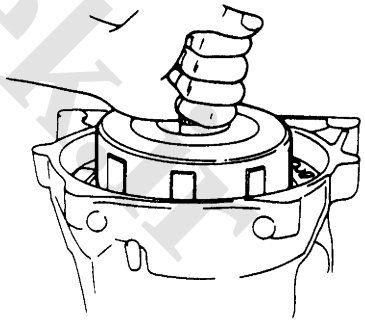

IYSQ01510249-01

www.cargeek.ir

 www.CarGeek.ir

18) When clutch disc and plate have been replaced, check height difference between forward clutch input shaft and transmission case (1) by measuring as shown in the figure.

**NOTE**

**If measured value is less than standard value, remove forward clutch assembly and install it again.**

**Standard height difference between forward clutch input shaft and transmission case**
**"a": About 2.0 mm (0.079 in.)**

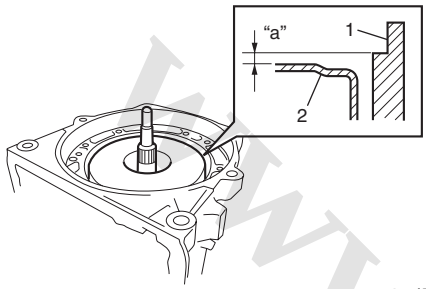


I5JB0A510135-01

| |
|---|
| 2. Forward clutch |

19) Apply grease to thrust bearing (1) and bearing race (2), and then install them to forward clutch input shaft.

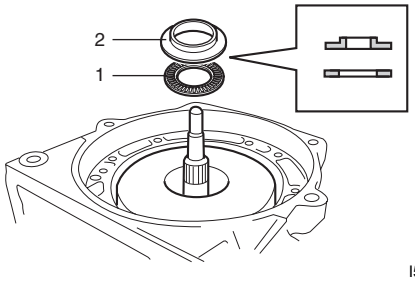


I5JB0A510136-01

20) Install O/D case by aligning cutout in O/D case (1) and that in transmission case.

**NOTE**

**Use care not to drop thrust rear race installed to O/D case.**

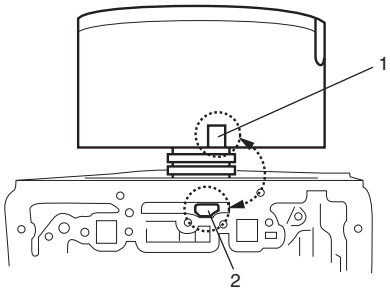


I5JB0A510137-02

| |
|---|
| 2. Cutout in automatic transmission |

21) Apply grease to thrust washers (1) and install them to O/D planetary gear (2) and planetary ring gear (3), and then install O/D input shaft assembly to O/D case.

**NOTE**

- **Fit claws of thrust washer into holes securely.**
- **Use care not to drop thrust washer installed to O/D planetary gear.**

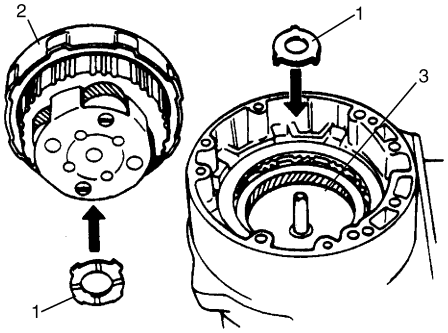


I5JB0A510138-01

22) When clutch disc or plate has been replaced, check height difference between O/D case (1) and O/D clutch cylinder (2) by measuring it as shown in the figure.

**NOTE**

**Measure at the highest point along inner circumference of O/D clutch cylinder.**

**Standard height difference between O/D case and O/D clutch cylinder**
**"a": About 3.5 mm (0.138 in.)**

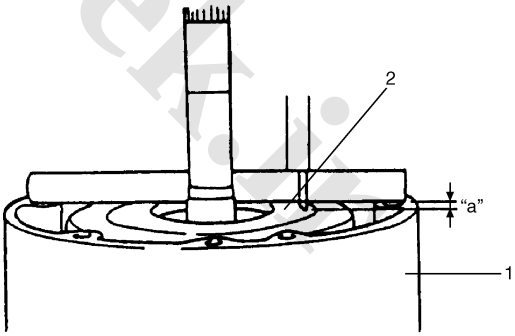


I5JB0A510161-01

www.cargeek.ir

23) Apply A/T fluid to new housing O-ring and install it to O/D case. Then install converter housing (1) and tighten housing bolt to specified torque.

**Tightening torque**
**Torque converter housing bolt (a): 35 N·m (3.5 kgf-m, 25.5 lb-ft)**
**Torque converter housing bolt (b): 58 N·m (5.8 kgf-m, 42.0 lb-ft)**

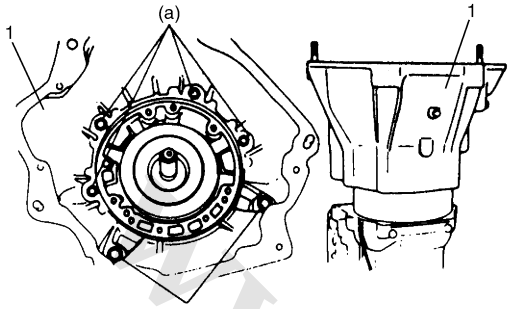


I5JB0A510162-01

24) Apply grease to bearing race (1) and thrust bearing (2) and install them to O/D clutch cylinder.

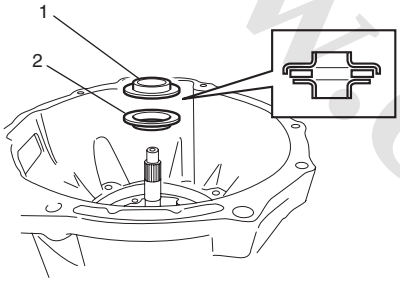


I5JB0A510139-01

25) Apply A/T fluid to new oil pump cover O-ring and install it to oil pump assembly. Then install oil pump assembly aligning bolt holes in O/D case with those in transmission case oil pump assembly. Apply seal packing to oil pump assembly bolts and tighten them by certain amount of torque at each time one after another till specified torque is attained.

**Tightening torque**
**Oil pump bolt (a): 22 N·m (2.2 kgf-m, 16.0 lb-ft)**

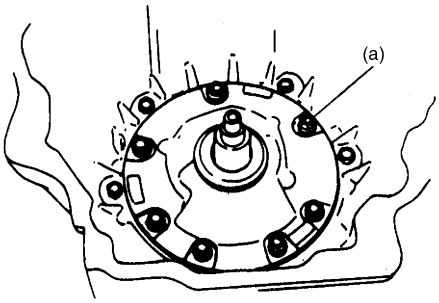


IYSQ01510257-01

26) Apply 2 – 4 kg/cm$^2$ air pressure into fluid holes in the figure as numbered and check operation sound of each part.

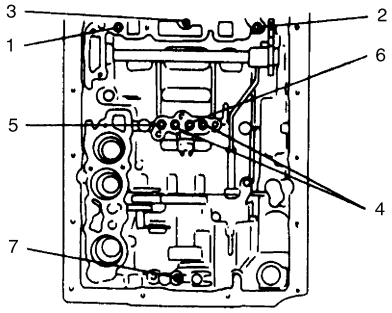


IYSQ01510258-01

| | |
|---|---|
| 1. O/D clutch | 5. Second coast brake |
| 2. O/D brake | 6. Second brake |
| 3. Forward clutch | 7. Reverse brake |
| 4. Direct clutch | |

27) Take clown transmission from stand and install new gasket and cover plate (1).

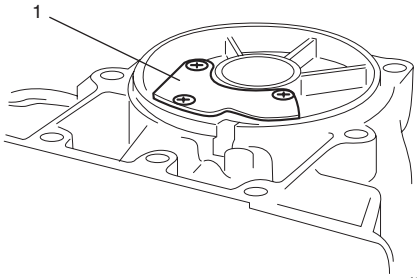


I5JB0A510089-01

28) Measure clearance in shaft direction by applying dial gauge (1) to output shaft as shown in the figure.

**Standard clearance in shaft direction**
**0.3 – 0.9 mm (0.012 – 0.035 in.)**

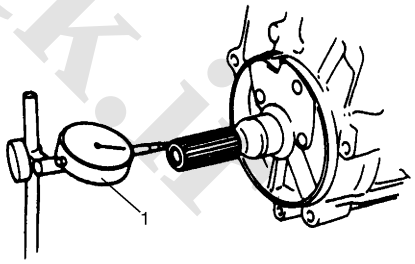


IYSQ01510259-01

www.cargeek.ir

 www.CarGeek.ir

29) Check that inner shaft runs smoothly.

30) Apply grease to lip of new oil lip seal and drive in oil lip seal with special tool till it contacts transmission case.

**Special tool**
**(A): 09923–46020**

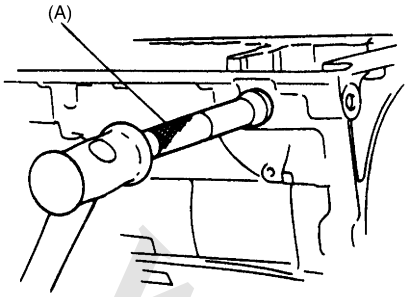


IYSQ01510261-01

31) Install a new spacer (1) to manual shift lever (2).

32) Install manual shift shaft (3) to transmission case through manual shift lever.

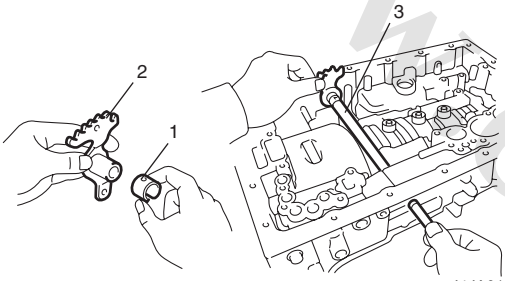


I4JA01512266-01

33) Drive in manual shift lever pin (1) by using hammer.

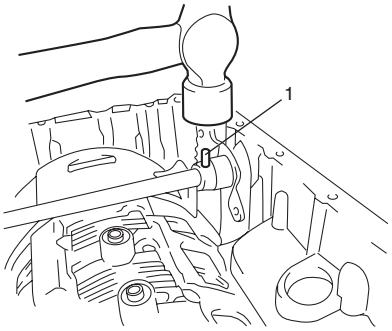


I4JA01512267-01

34) Align hole in sleeve cover with dent in manual shift lever and caulk securely with pin punch (1). Then check that manual shift shaft turns smoothly.

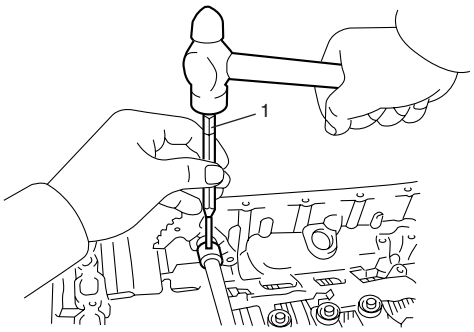


I4JA01512268-01

35) Install parking lock pawl (2), parking pawl pin (1) and parking pawl spring (3).

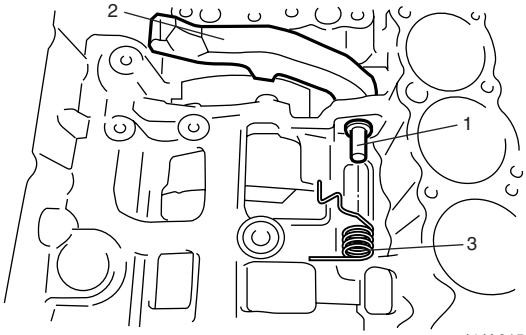


I4JA01512269-01

36) Connect parking lock rod (2) to manual shift lever (1) as shown in the figure.

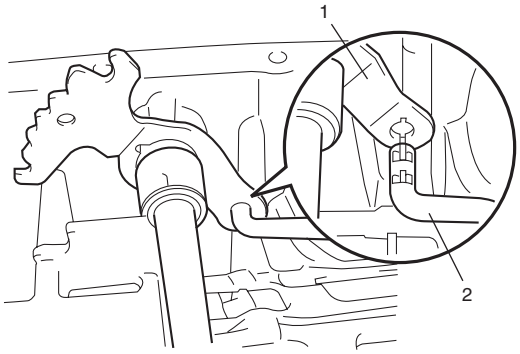


I4JA01512270-01

37) Install parking lock pawl bracket (1).
Tighten parking pawl bracket bolts (2) to specified torque.

**Tightening torque**
**Parking pawl bracket bolt (a): 7.4 N·m (0.74 kgf-m, 5.5 lb-ft)**

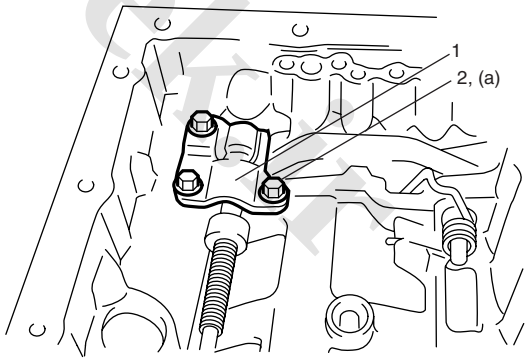


I4JA01512271-01

www.cargeek.ir

38) Apply A/T fluid to new O-ring and spring and install them to accumulator piston and install accumulator piston to transmission case.

**Accumulator spring specification**

| Accumulator piston | Accumulator spring | |
|---|---|---|
| | Spring free length “a” | Color |
| Forward clutch | 75.03 | White + Blue |
| Direct clutch | 57.74 | White + Purple |
| Second brake | 56.16 | Purple |

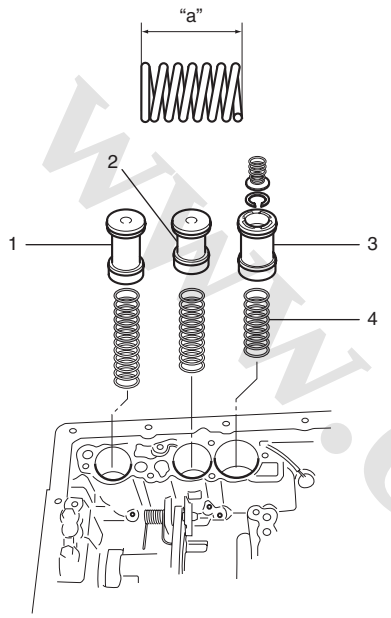


I5JB0A510140-01

| | |
|---|---|
| 1. | Forward clutch accumulator piston |
| 2. | Direct clutch accumulator piston |
| 3. | Second brake accumulator piston |
| 4. | Accumulator spring |

39) After confirming that accumulator piston is pushed all the way down, match pin of manual shift lever with groove in manual valve.

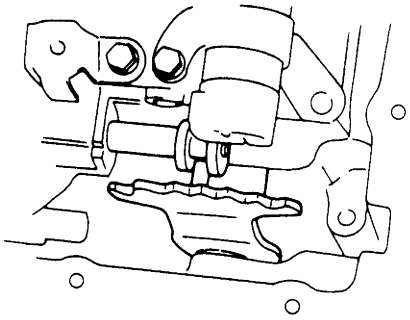

IYSQ01510269-01

40) Fix valve body (1) by using bolts with each nominal length as indicated in the figure and tightening to specified torque.

**Tightening torque**
**Valve body bolt: 10 N·m (1.0 kgf-m, 7.5 lb-ft)**

**Valve body bolt nominal length**
**“a”: 28 mm (1.10 in.)**
**“b”: 30 mm (1.18 in.)**
**“c”: 36 mm (1.42 in.)**
**“d”: 45 mm (1.77 in.)**

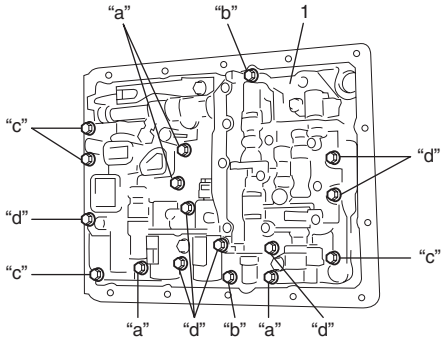


I5JB0A510141-01

41) Install O/D brake applying tube (1).

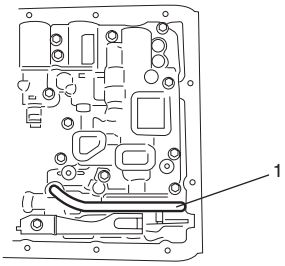


I5JB0A510143-02

42) Lubricate new O-ring with A/T fluid and attach it to grommet of solenoid wire harness. Then connect solenoid wire harness to transmission case and fix it with solenoid wire harness clamp. Connect each connector to solenoid. And install new gasket and brake applying cover.

**Tightening torque**
**Transmission wire connector bolt (a): 16 N·m ( 1.6 kgf-m, 11.5 lb-ft)**

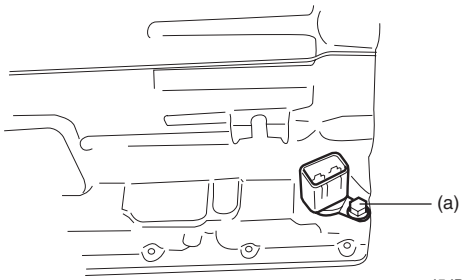


I5JB0A510142-01

www.cargeek.ir

 www.CarGeek.ir

43) Connect solenoid coupler to each solenoid.

44) Install oil strainer (1) to valve body assembly.

**Tightening torque**
**Oil strainer bolt (a): 5.5 N·m (0.55 kgf-m, 4.0 lb-ft)**

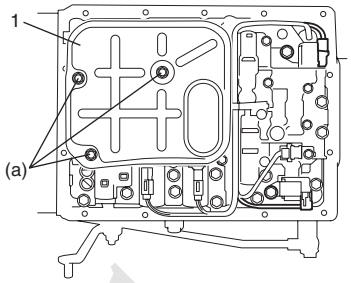


I5JB0A510144-01

45) Install transmission oil pan (1) with new oil pan gasket.

**NOTE**

**Align cutout in oil pan gasket with that in transmission case.**

**Tightening torque**
**Transmission oil pan bolt: 4.5 N·m (0.45 kgf-m, 3.5 lb-ft)**

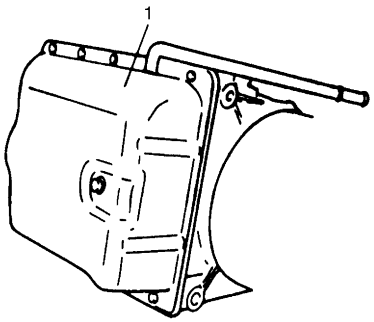


IYSQ01510094-01

46) With wood rough key attached to output shaft, install sensor rotor (2) by aligning its key groove with wood rough key and install C-ring.

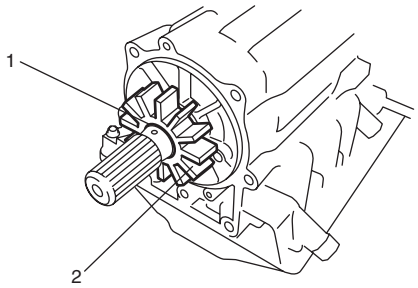


I5JB0A510072-01

| |
|---|
| 1. C-ring |

47) Install adapter case (1) with new adapter gasket to transmission case and tighten adapter case bolts to specified torque.

**Tightening torque**
**Adapter case bolt (a): 31 N·m (3.1 kgf-m, 30.0 lb-ft)**

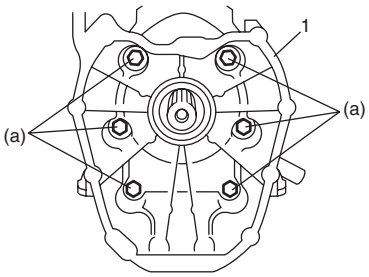


I5JB0A510145-01

48) Apply A/T fluid to new O-rings and install them to input shaft speed sensor (1) and output shaft speed sensor (2), and then install input shaft speed sensor (1) and output shaft speed sensor (2).

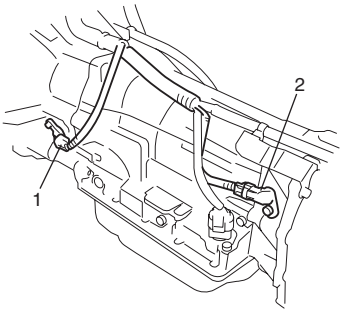


I5JB0A510163-01

49) After turning manual shift shaft fully rearward, turn it back by 2 notches and set it to “N” range. Then install shift switch, lock washer and nut and tighten nut. After tightening it, bend claws of lock washer.

**Tightening torque**
**Manual shift shaft nut (a): 12.5 N·m (1.25 kgf-m, 9.0 lb-ft)**

50) With neutral reference line (1) and cut groove (2) in switch aligned, tighten lock bolt.

**Tightening torque**
**Transmission range sensor bolt (b): 5.3 N·m ( 0.53 kgf-m, 4.0 lb-ft)**

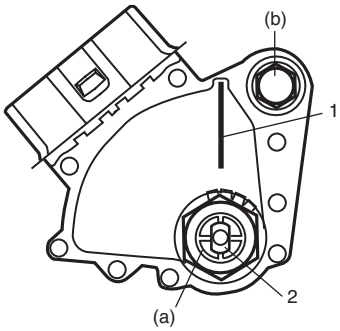


I5JB0A510147-01

www.cargeek.ir

51) Confirm that torque converter is fully fitted in transmission. Confirmation can be done by measuring dimension between end surface of housing case (2) and drive plate installation seat.

**Standard dimension between end surface of case housing and drive plate installation seat "a"**
**17.4 mm (0.69 in.)**

52) Check that torque converter turns smoothly and apply grease to center piece (1) of torque converter.

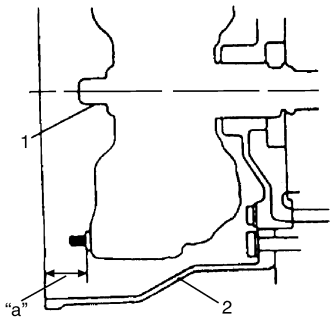


IYSQ01510279-01

# Specifications

## Tightening Torque Specifications

S5JB0A5107001

| Fastening part | Tightening torque | | | Note |
|---|---|---|---|---|
| | N·m | kgf-m | lb-ft | |
| Fluid pressure check hole bolt | 8 | 0.8 | 6.0 | ☞ |
| A/T fluid drain plug | 20 | 2.0 | 14.5 | ☞ |
| Manual selector assembly mounting bolt | 18 | 1.8 | 13.0 | ☞ |
| Manual select cable nut | 13 | 1.3 | 9.5 | ☞ |
| Manual shift shaft nut | 12.5 | 1.25 | 9.0 | ☞ / ☞ |
| Transmission range sensor bolt | 5.3 | 0.53 | 4.0 | ☞ / ☞ |
| Manual select lever nut | 12.5 | 1.25 | 9.0 | ☞ |
| Input shaft speed sensor bolt | 7 | 0.7 | 5.0 | ☞ |
| Output shaft speed sensor bolt | 7 | 0.7 | 5.0 | ☞ |
| Oil pump bolt | 7.5 | 0.75 | 5.5 | ☞ |
| Center support bolt | 26 | 2.6 | 19.0 | ☞ |
| Torque converter housing bolt | 35 | 3.5 | 25.5 | ☞ |
| Torque converter housing bolt | 58 | 5.8 | 42.0 | ☞ |
| Oil pump bolt | 22 | 2.2 | 16.0 | ☞ |
| Parking pawl bracket bolt | 7.4 | 0.74 | 5.5 | ☞ |
| Valve body bolt | 10 | 1.0 | 7.5 | ☞ |
| Transmission wire connector bolt | 16 | 1.6 | 11.5 | ☞ |
| Oil strainer bolt | 5.5 | 0.55 | 4.0 | ☞ |
| Transmission oil pan bolt | 4.5 | 0.45 | 3.5 | ☞ |
| Adapter case bolt | 31 | 3.1 | 30.0 | ☞ |

**NOTE**

**The specified tightening torque is also described in the following.**
**"Manual Selector Assembly Components: "**
**"Select Cable Component: "**
**"Oil Cooler Hose and Pipe Components: "**
**"Automatic Transmission Unit Components: "**
**"Oil Pump Components: "**
**"Valve Body Assembly Components: "**

**Reference:**
For the tightening torque of fastener not specified in this section, refer to "Fastener Information: in Section 0A".

www.cargeek.ir

 www.CarGeek.ir

# Special Tools and Equipment

## Recommended Service Material

S5JB0A5108001

**NOTE**

**Required service material is also described in the following.**
**“Oil Pump Components: ”**
**“Overdrive (Planetary Gear Side) Components: ”**
**“Overdrive (Case Side) Components: ”**
**“Forward Clutch Components: ”**
**“Direct Clutch Components: ”**
**“Center Support Components: ”**
**“Planetary Gears and Output Shaft Components: ”**

## Special Tool

S5JB0A5108002

| | |
|---|---|
| 09913–50121<br>Oil seal remover<br>☞ 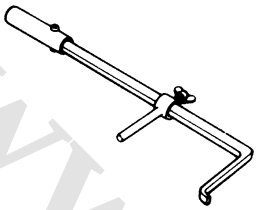 | 09913–65135<br>Bearing puller<br>☞ 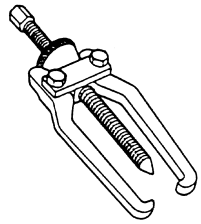 |
| 09913–85210<br>Bearing installer<br>☞ 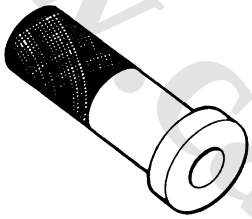 | 09918–48211<br>Oil pump remover<br>☞ 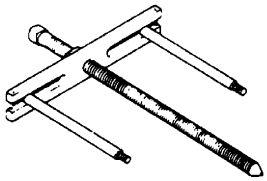 |
| 09918–48220<br>Oil pump remover attachment (M8)<br>☞ 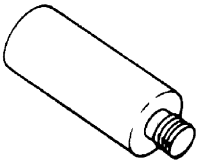 | 09920–20310<br>Clutch spring hook<br>☞ 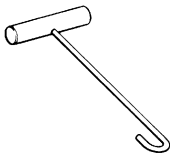 |
| 09920–76010<br>Snap ring opener<br>☞ 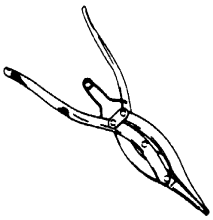 | 09922–89810<br>Shifter lock pin remover (3.5 mm)<br>☞ 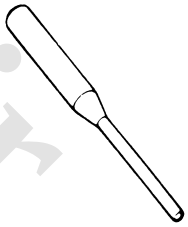 |
| 09923–46020<br>Joint pipe<br>☞ 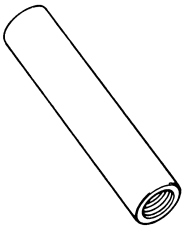 | 09925–37811–001<br>Oil pressure gauge<br>☞ 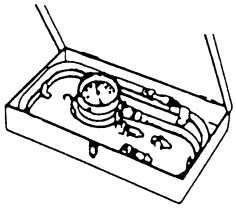 |
| 09926–96510<br>Spring compressor<br>☞ 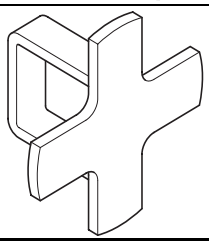 | 09926–98310<br>Clutch spring compressor<br>☞ / ☞ / ☞ / ☞ / ☞ / ☞ 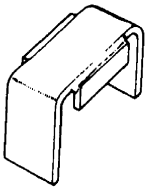 |

www.cargeek.ir

| | |
|---|---|
| 09926–98320<br>Spring compressor No. 1 set<br>☞ / ☞ / ☞<br> 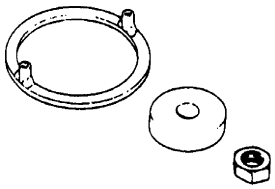 | 09926–98390<br>Remover<br>☞ / ☞<br> 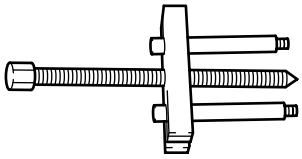 |
| 09927–66520<br>Oil pump remover<br>☞<br> 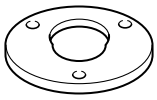 | 09944–88210<br>Bearing housing installer<br>☞ / ☞<br> 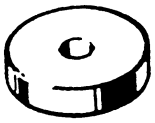 |
| SUZUKI scan tool<br>—<br>This kit includes following items. 1. Tech 2, 2. PCMCIA card, 3. DLC cable, 4. SAE 16/19 adapter, 5. Cigarette cable, 6. DLC loopback adapter, 7. Battery power cable, 8. RS232 cable, 9. RS232 adapter, 10. RS232 loop back connector, 11. Storage case, 12. Power supply ☞ / ☞<br> 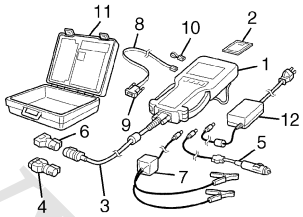 | |

www.cargeek.ir

 www.CarGeek.ir

# Manual Transmission/Transaxle

## General Description

### Manual Transmission Construction

S5JB0A5201001

The manual transmission consists of the input shaft, output shaft, countershaft and reverse idle gear shaft which are installed in the die-cast aluminum alloy case. This transmission provides five forward speeds and one reverse speed. The 1st, 2nd, 3rd and 4th speeds are for speed reduction drive, 5th speed is for direct drive. The low speed (1st and 2nd) synchronizer is mounted on the countershaft and engaged with the countershaft 1st or 2nd gear. The high speed (3rd and 4th) synchronizer is mounted on of the input shaft and engaged with the input shaft 3rd and 4th gear. The 5th speed synchronizer is mounted on the input shaft and engaged with the output shaft. The gear shift lever case is located at the upper behind the transmission case and has a cam which prevents direct gear shifting from the 5th speed gear into the reverse gear.

As the die-cast aluminum alloy case are sealed with liquid type gasket, it is necessary to use genuine sealant or its equivalent on its mating surface when reassembling them. Also, the case fastening bolts must be tightened to specified torque by means of the torque wrench and tightening over or below the specified torque should be avoided.

The description under “Repair Instructions” covers the transfer partially which is next to the transmission as well, but their gear boxes are independent and each of them has its own drain and filler plugs for the oil change or the level check.

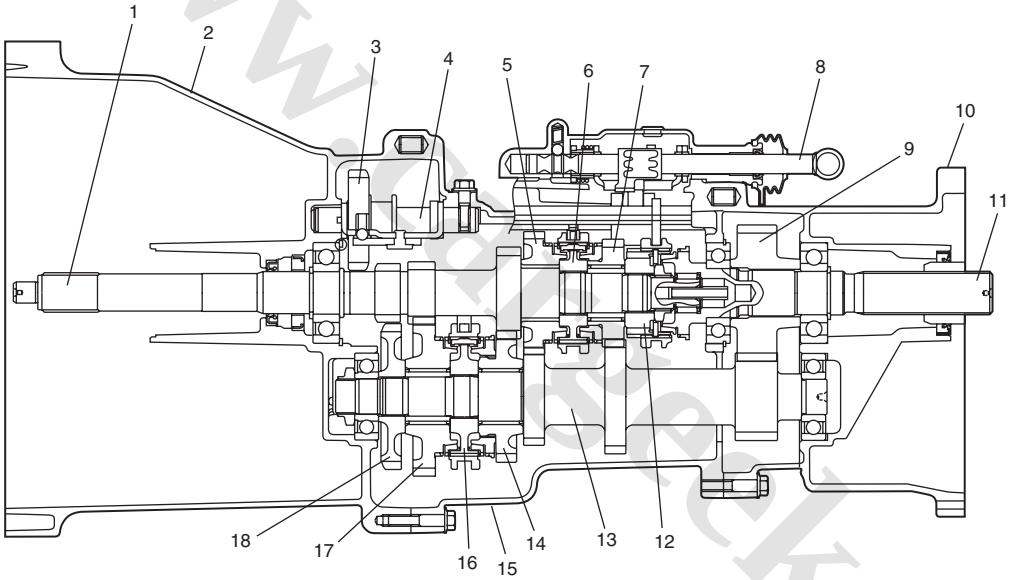


I5JB0A520017-02

| | | |
|---|---|---|
| 1. Input shaft | 7. 3rd gear | 13. Countershaft |
| 2. Transmission front case | 8. Gear shift shaft | 14. 2nd gear |
| 3. Reverse idler gear | 9. Output shaft gear | 15. Transmission rear case |
| 4. Reverse shaft | 10. Adapter case | 16. Low speed synchronizer hub |
| 5. 4th gear | 11. Output shaft | 17. 1st gear |
| 6. High speed synchronizer hub | 12. 5th speed synchronizer hub | 18. Reverse gear |

www.cargeek.ir

www.CarGeek.ir


# Diagnostic Information and Procedures

## Manual Transmission Symptom Diagnosis

S5JB0A5204001

| Condition | Possible cause | Correction / Reference Item |
|---|---|---|
| ***Gear slipping out of mesh*** | Worn shift fork shaft | *Replace.* |
| | Worn shift fork or synchronizer sleeve | *Replace.* |
| | Weak or damaged locating spring | *Replace.* |
| | Worn bearings on input shaft, countershaft or output shaft | *Replace.* |
| | Worn chamfered tooth on sleeve or gear | *Replace sleeve and gear.* |
| | Missing or disengagement of snap ring(s) | *Install or replace.* |
| ***Gears refusing to disengage*** | Weakened or broken synchronizer spring | *Replace.* |
| | Distorted shift shaft or shift fork | *Replace.* |
| ***Hard shifting*** | Improper clutch pedal free travel | *Replace pedal arm and/or clutch master cylinder.* |
| | Distorted or broken clutch disc | *Replace.* |
| | Damaged clutch pressure plate | *Replace clutch cover.* |
| | Air in clutch hydraulic system | *Bleed air.* |
| | Fluid leakage from clutch fluid line | *Locate leaking point and repair.* |
| | Worn synchronizer ring | *Replace.* |
| | Worn chamfered tooth on sleeve or gear | *Replace sleeve and gear.* |
| | Distorted shift shaft | *Replace.* |
| ***Noise*** | Inadequate or insufficient lubricant | *Replenish.* |
| | Damaged or worn bearing(s) | *Replace.* |
| | Damaged or worn gear(s) | *Replace.* |
| | Damaged or worn synchronizer ring | *Replace.* |
| | Damaged or worn chamfered tooth on sleeve or gear | *Replace.* |

www.cargeek.ir

 www.CarGeek.ir

# Repair Instructions

## Manual Transmission Assembly Components

S5JB0A5206001

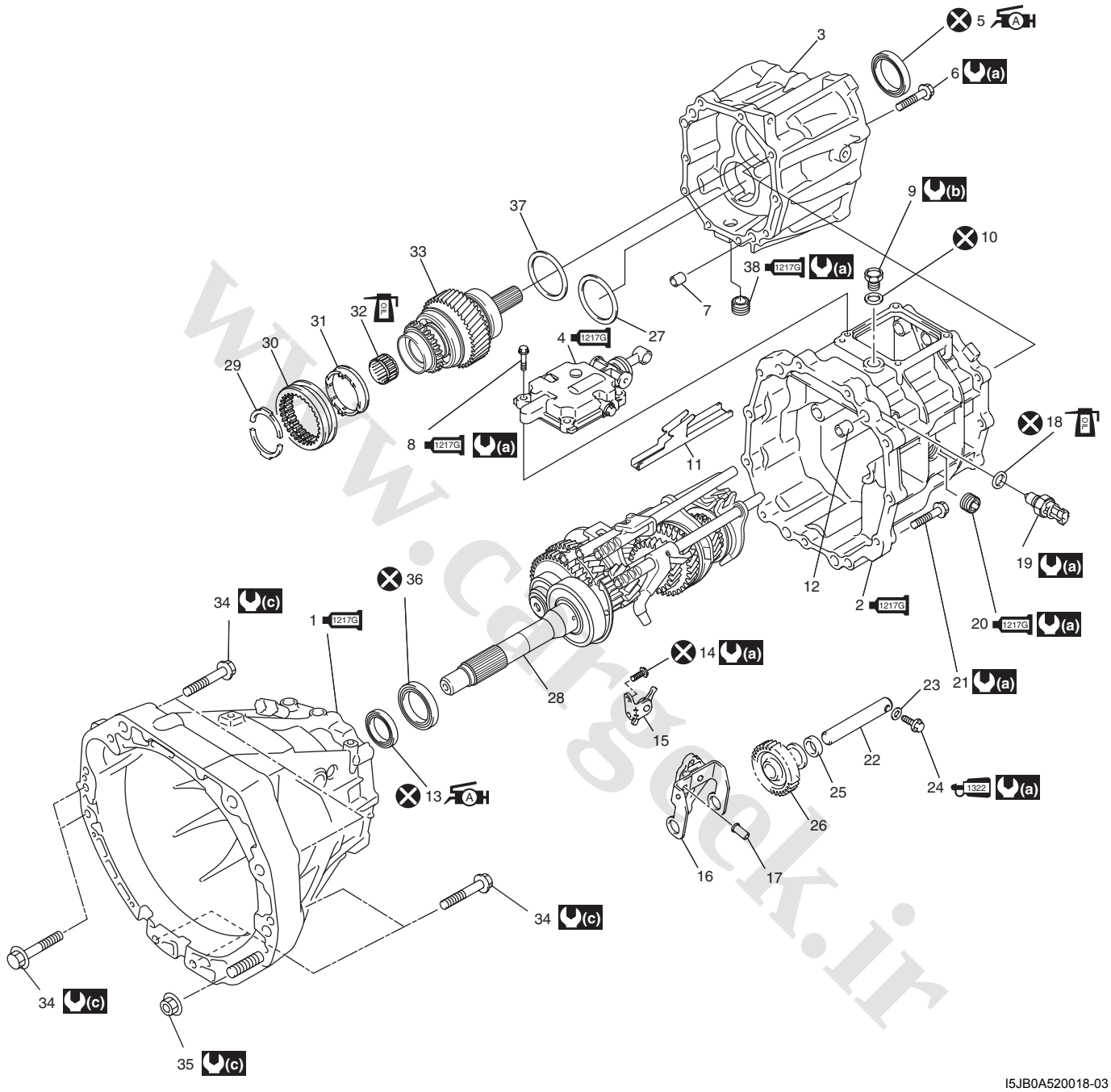


I5JB0A520018-03

www.cargeek.ir

| | | |
|---|---|---|
| 1217G 1. Transmission front case<br>: Apply sealant 99000-31260 to mating surface of front case and rear case. | 16. Reverse gear shift lever | 31. 5th speed synchronizer ring |
| 1217G 2. Transmission rear case<br>: Apply sealant 99000-31260 to mating surface of rear case and adapter case. | 17. Reverse shift locating | 32. Input shaft needle bearing |
| 3. Adapter case | 18. O-ring | 33. Output shaft assembly |
| 1217G 4. Gear shift lever front case assembly<br>: Apply sealant 99000-31260 to mating surface of rear case and gear shift lever front case assembly. | 19. Back up light switch | 34. Transmission to engine bolt |
| A 5. Adapter case oil seal<br>: Apply grease 99000-25010 to oil seal lip. | 1217G 20. Oil filler plug<br>: Apply sealant 99000-31260 to all around thread part of bolt. | 35. Transmission to engine nut |
| 6. Adapter case bolt | 21. Transmission case bolt | 36. Pump seal |
| 7. Knock pin | 22. Reverse gear shaft | 37. Output shaft shim |
| 1322 8. Gear shift lever case bolt<br>: Apply thread lock 99000-32110 to all around thread part of bolt. | 23. Reverse shaft bolt washer | 1217G 38. Drain plug<br>: Apply sealant 99000-31260 to all around thread part of bolt. |
| 9. Oil hole plug | 1322 24. Reverse shaft bolt<br>: Apply thread lock 99000-32110 to all around thread part of bolt. | (a) : 23 N·m (2.3 kgf-m, 17.0 lb-ft) |
| 10. Oil hole gasket | 25. Reverse gear shaft washer | (b) : 10 N·m (1.0 kgf-m, 7.5 lb-ft) |
| 11. Oil gutter | 26. Reverse idler gear | (c) : 85 N·m (8.5 kgf-m, 61.5 lb-ft) |
| 12. Knock pin | 27. Countershaft shim | : Do not reuse. |
| A 13. Input shaft oil seal<br>: Apply grease 99000-25010 to oil seal lip. | 28. Input shaft & countershaft assembly | : Apply transmission oil. |
| 14. Low gear shift inverse lever bolt | 29. 5th speed synchronizer lever | |
| 15. Low gear shift inverse lever | 30. 5th speed synchronizer sleeve | |

www.cargeek.ir

 www.CarGeek.ir

## Gear Shift Control Lever Rear Case Assembly Components

S5JB0A5206002

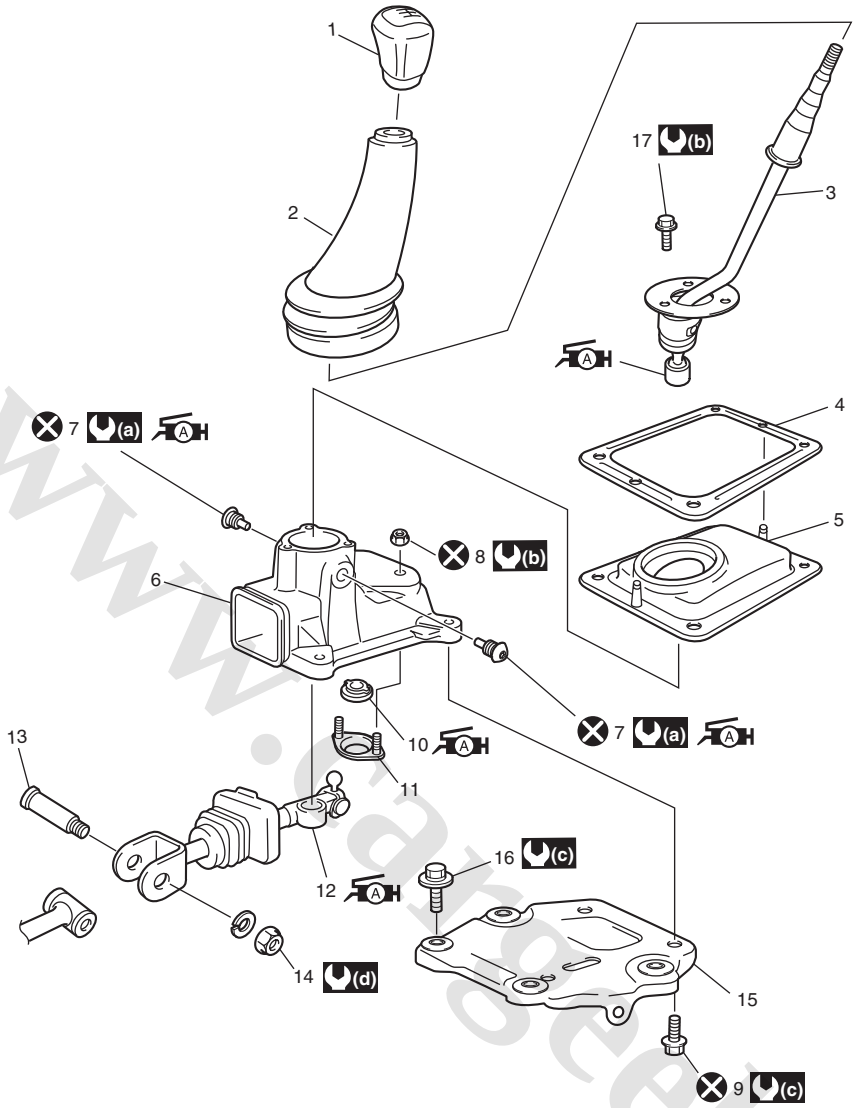


I5JB0A520019-08

| | | |
|---|---|---|
| 1. Gear shift control lever knob | 9. Gear shift lever rear case bolt | 17. Gear shift lever case cover bolt |
| 2. Gear shift control lever boot | 10. Gear shift control joint bush<br>: Apply grease 99000-25010 to bush. | (a) : 9 N·m (0.9 kgf-m, 6.5 lb-ft) |
| 3. Gear shift control lever assembly<br>: Apply grease 99000-25010 to bush of lever. | 11. Gear shift stopper plate | (b) : 10 N·m (1.0 kgf-m, 7.5 lb-ft) |
| 4. Gear shift control boot cover | 12. Gear shift control shaft<br>: Apply grease 99000-25010 to sliding part of joint. | (c) : 23 N·m (2.3 kgf-m, 17.0 lb-ft) |
| 5. Gear shift control lever No.2 sheet | 13. Control shaft joint bolt | (d) : 18 N·m (1.8 kgf-m, 13.0 lb-ft) |
| 6. Gear shift lever rear case | 14. Control shaft joint nut | : Do not reuse. |
| 7. Control lever locating bolt<br>: Apply grease 99000-25010 to end of bolt. | 15. Gear shift lever case plate | |
| 8. Gear shift stopper plate nut | 16. Gear shift lever rear case plate bolt | |

www.cargeek.ir

www.CarGeek.ir


## Gear Shift Lever Front Case Assembly Components

S5JB0A5206026

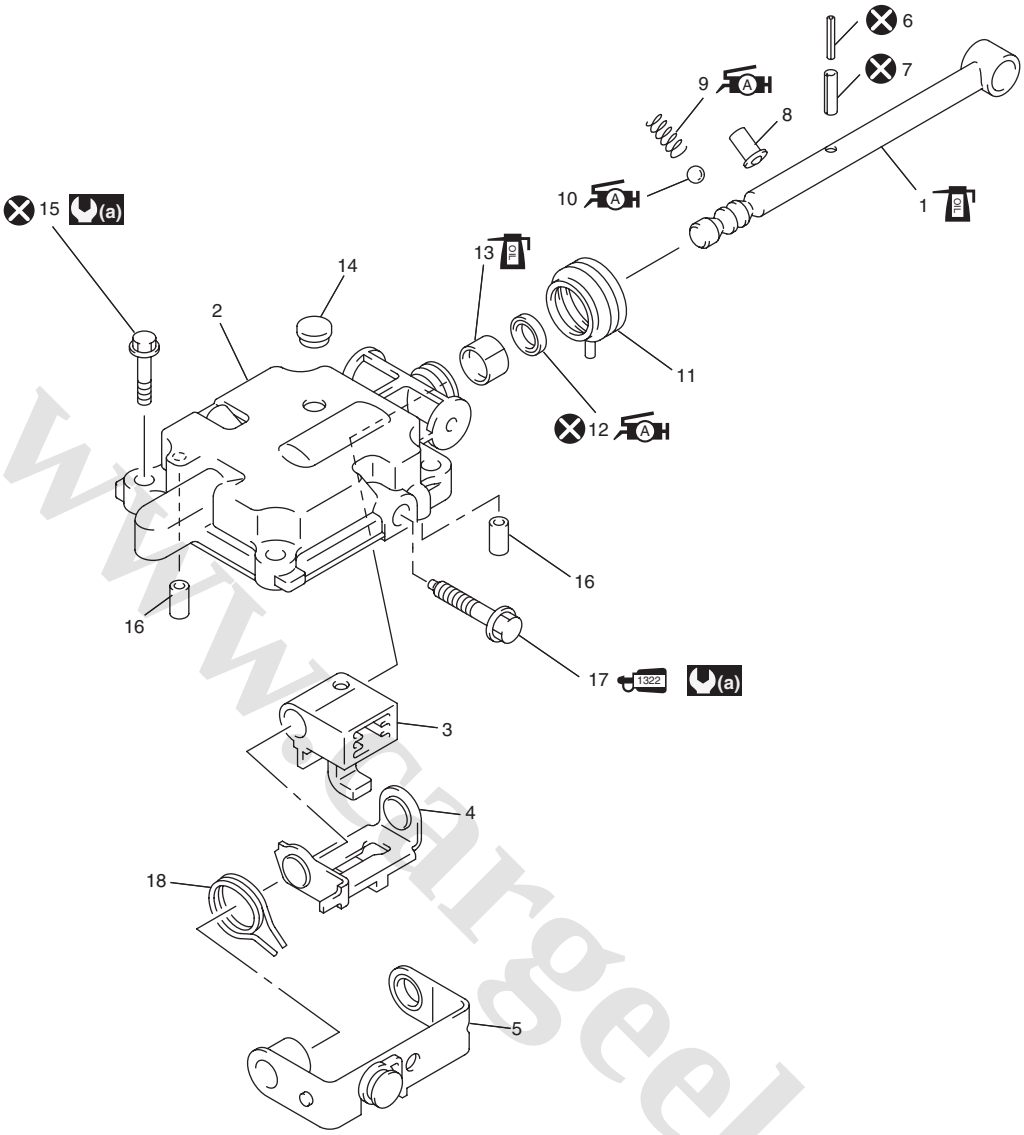


I5JB0A520001-02

| | | |
|---|---|---|
| 1. Gear shift shaft | 8. Gear shift locating retainer | 15. Gear shift lever front case bolt |
| 2. Gear shift lever front case | 9. Gear shift locating spring<br>: Apply grease 99000-25010 to spring. | 16. Knock pin |
| 3. Gear shift & select arm | 10. Gear shift locating ball<br>: Apply grease 99000-25010 to ball. | 17. Gear shift stop bolt<br>: Apply thread lock 99000-32110 to bolt thread. |
| 4. Gear shift interlock plate | 11. Gear shift shaft boot | 18. Gear select return spring |
| 5. Reverse gear shift limit plate | 12. Gear shift shaft oil seal<br>: Apply grease 99000-25010 to seal lip. | (a) : 23 N·m (2.3 kgf-m, 17.0 lb-ft) |
| 6. Gear shift arm inner pin | 13. Gear shift case bush | : Do not reuse. |
| 7. Gear shift arm outer pin | 14. Gear shift case plug | : Apply transmission oil. |

www.cargeek.ir

 www.CarGeek.ir

## Gear Shift Shaft and Fork Components

S5JB0A5206027

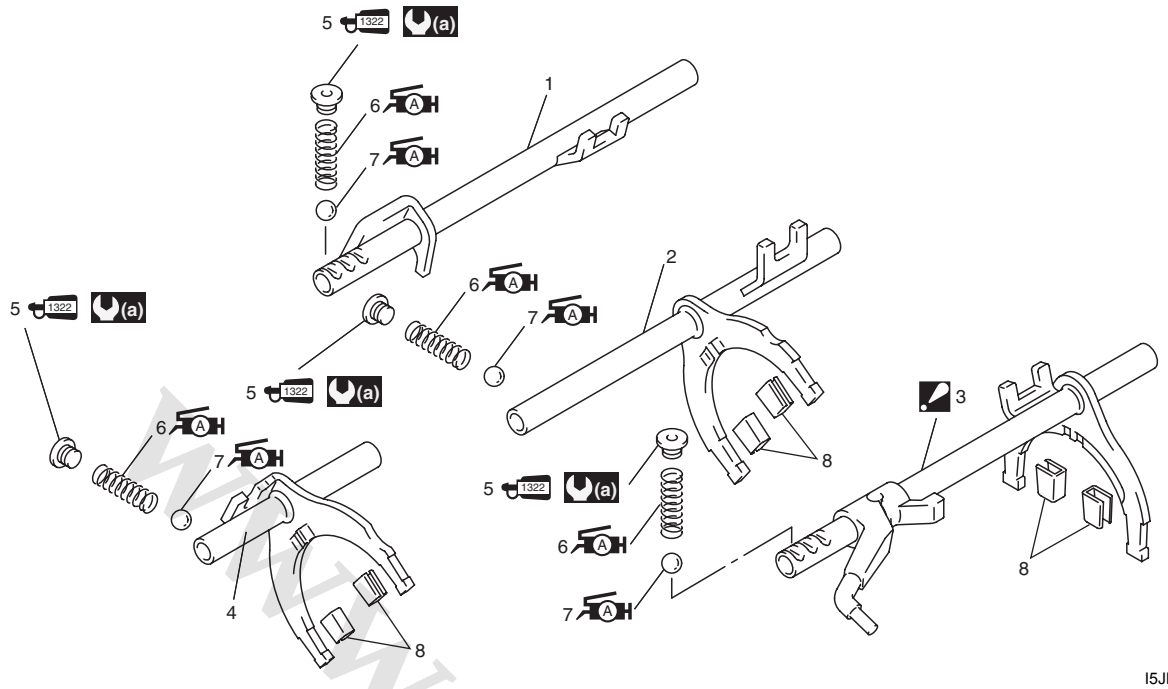


I5JB0A520002-02

| | | |
|---|---|---|
| 1. Low speed gear shift shaft | 4. Low speed gear shift fork | 7. Gear shift shaft ball<br>: Apply grease 99000-25010 to ball. |
| 2. High speed gear shift fork | 1322 5. Gear shift locating bolt<br>: Apply thread lock 99000-32110 to bolt thread. | 8. Gear shift fork bush |
| 3. 5th & reverse gear shift fork<br>: Never disassemble. | 6. Gear shift locating spring<br>: Apply grease 99000-25010 to spring. | (a) : 23 N·m (2.3 kgf-m, 17.0 lb-ft) |

www.cargeek.ir

www.CarGeek.ir


## Input Shaft Assembly, Output Shaft Assembly and Countershaft Assembly Components

S5JB0A5206003

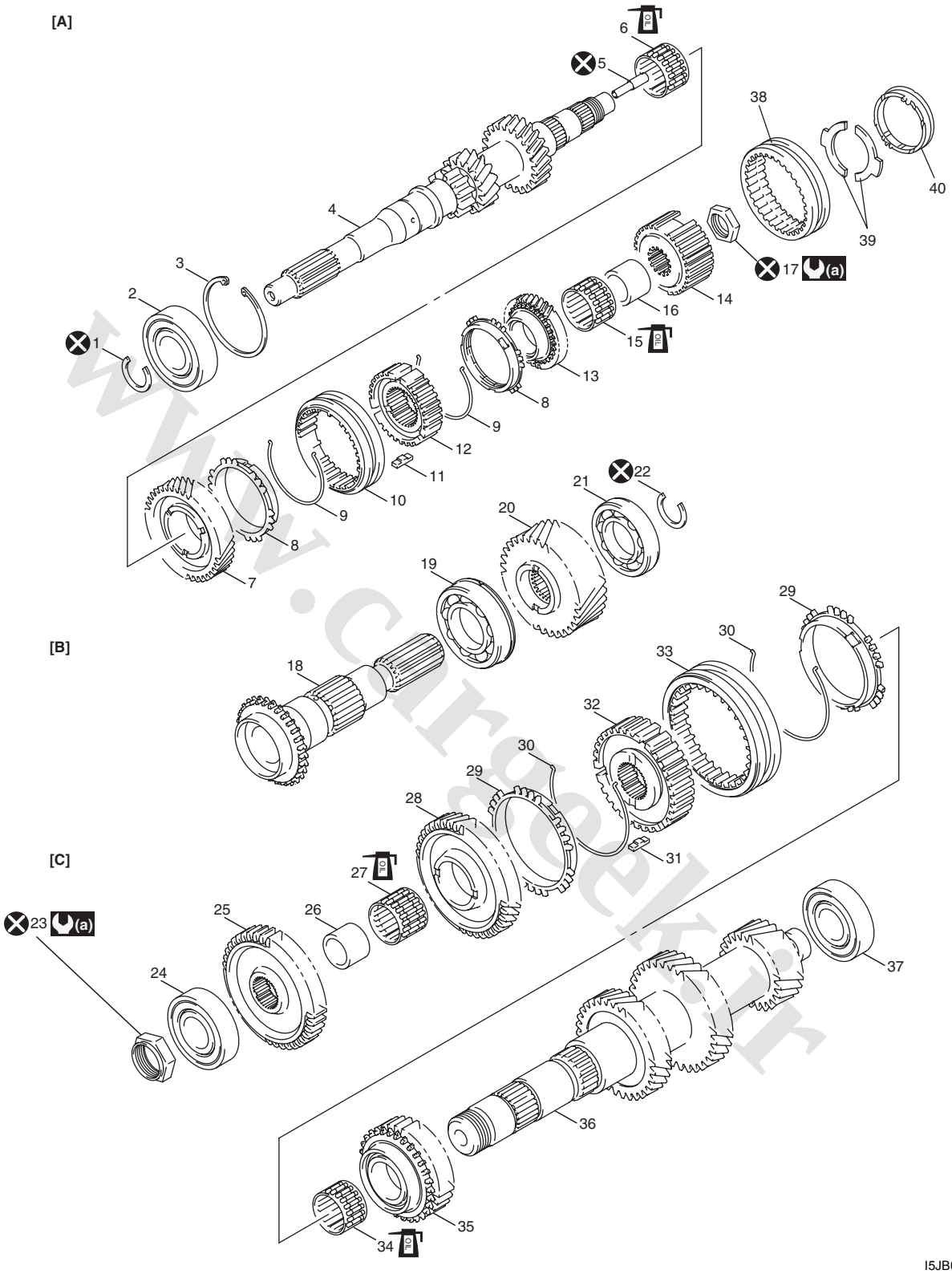


I5JB0A520003-01

www.cargeek.ir

 www.CarGeek.ir

| | | |
|---|---|---|
| [A]: Input shaft assembly | 14. 5th speed synchronizer hub | 30. Low speed synchronizer spring |
| [B]: Output shaft assembly | 15. High speed gear needle bearing | 31. Low speed synchronizer key |
| [C]: Countershaft assembly | 16. Input shaft 3rd gear bush | 32. Low speed synchronizer hub |
| 1. Snap ring | 17. Input shaft 5th hub nut | 33. Low speed synchronizer sleeve |
| 2. Input shaft front bearing | 18. Output shaft | 34. Countershaft gear needle bearing |
| 3. Input shaft front bearing circlip | 19. Output shaft front bearing | 35. 2nd gear |
| 4. Input shaft | 20. Output shaft gear | 36. Countershaft |
| 5. Input shaft union | 21. Output shaft rear bearing | 37. Countershaft rear bearing |
| 6. High speed gear needle bearing | 22. Output shaft rear snap ring | 38. 5th speed synchronizer sleeve |
| 7. 4th gear | 23. Countershaft front bearing nut | 39. 5th speed synchronizer lever |
| 8. High speed synchronizer ring | 24. Countershaft front bearing | 40. 5th speed synchronizer ring |
| 9. High speed synchronizer spring | 25. Countershaft reverse gear | (a) : 210 N·m (21.0 kgf-m, 152.0 lb-ft) |
| 10. High speed synchronizer sleeve | 26. Countershaft low needle bush | : Do not reuse. |
| 11. High speed synchronizer key | 27. Countershaft gear needle bearing | : Apply transmission oil. |
| 12. High speed synchronizer hub | 28. 1st gear | |
| 13. 3rd gear | 29. Low speed synchronizer ring | |

## Manual Transmission Oil Change

S5JB0A5206004

1) Before changing or inspecting oil, be sure to stop engine and lift vehicle horizontally.
2) With vehicle lifted up, check oil level and leakage. If leakage exists, correct or repair it.

**NOTE**

**Whenever vehicle is hoisted for any other service work than oil change, also be sure to check for oil leakage.**

3) Remove oil filler plug (2).
4) Remove drain plug (1), and drain old oil.
5) Apply sealant to thread of drain plug (1), and tighten it to specified torque.

**"A": Sealant 99000–31260 (SUZUKI Bond No.1217G)**

**Tightening torque**
**Transmission oil drain plug (a): 23 N·m (2.3 kgf-m, 17.0 lb-ft)**

**NOTE**

**If water or rust is mixed in drained oil, be sure to check breather hose and boot of transmission.**

6) Pour new specified oil until oil level reaches bottom of oil filler plug hole (3) as shown in figure.

**NOTE**

**It is highly recommended to use API 75 W-90 gear oil.**

**Gear oil specifications**
**: API GL-4 (For SAE classification, refer to viscosity chart [A] in figure.)**

**Transmission gear oil capacity (Reference)**
**1.9 liters (4.0 / 3.3 US / Imp. pt)**

7) Apply sealant to thread of filler plug, and then tighten it to specified torque.

**"A": Sealant 99000–31260 (SUZUKI Bond No.1217G)**

**Tightening torque**
**Oil filler plug (b): 23 N·m (2.3 kgf-m, 17.0 lb-ft)**

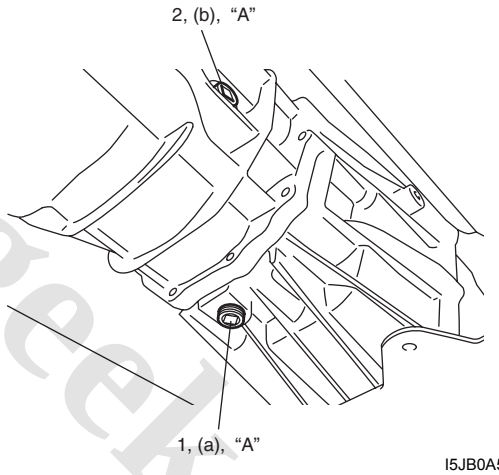


I5JB0A520020-01

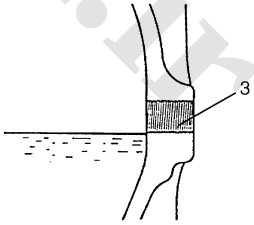


I5JB0A520022-02

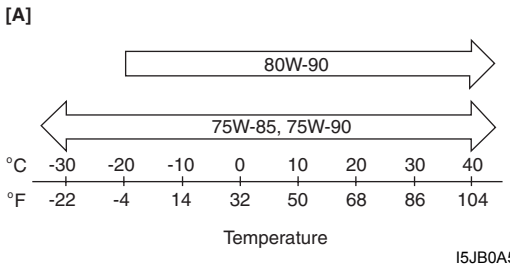


I5JB0A520021-02

www.cargeek.ir

www.CarGeek.ir


## Transmission Shift Control Lever Removal and Installation

S5JB0A5206005

### Removal

1) Remove front console box referring to “Console Box Components: in Section 9H”.
2) Lift up boot cover (1), boot (2) and sheet (3).
3) Remove case cover (4) and take out shift control lever (5) from gear shift lever rear case (6).

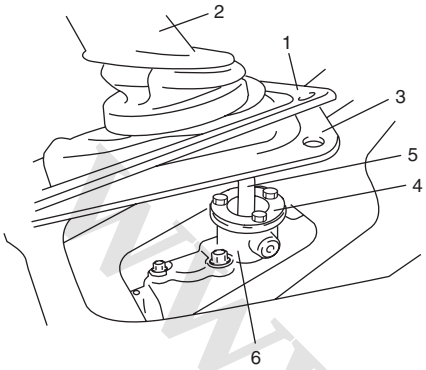


I5JB0A520023-02

### Installation

1) Tighten new control lever locating bolts (1) to specified torque, if removed.

   **Tightening torque**
   **Control lever locating bolt (a): 9 N·m (0.9 kgf-m, 6.5 lb-ft)**

2) Apply grease to pivot portions and seat, then install shift control lever.

   **“A”: Grease 99000–25010 (SUZUKI Super Grease A)**

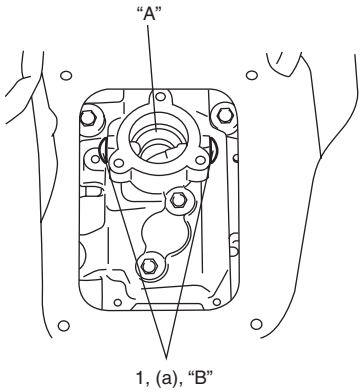


I5JB0A520024-03

3) Set shift control lever (2) to gear shift lever rear case.
4) Install case cover (1) to gear shift lever rear case (3). Tighten case cover bolt to specified torque.

   **Tightening torque**
   **Case cover bolt (a): 10 N·m (1.0 kgf-m, 7.5 lb-ft)**

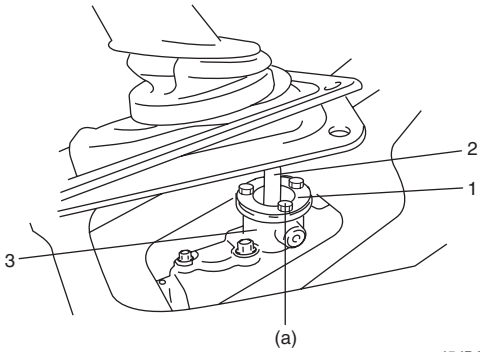


I5JB0A520025-02

5) Install sheet, boot (1) with boot cover (2) to floor panel.

   **Tightening torque**
   **Control lever boot cover bolt (a): 12 N·m (1.2 kgf-m, 9.0 lb-ft)**

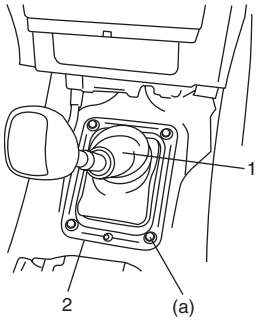


I5JB0A520027-02

6) Install front console box referring to “Console Box Components: in Section 9H”.

## Transmission Shift Control Lever Inspection

S5JB0A5206006

- Check transmission shift control lever lower portion and control lever locating sheet for excessive wear.
- Check boot for damage.

Correct or replace if necessary.

www.cargeek.ir

 www.CarGeek.ir

## Back Up Light Switch Removal and Installation

S5JB0A5206007

### Removal

**⚠ WARNING**

**Refrain from work while exhaust No.2 pipe is hot.**

**NOTE**

- **When replacing switch, use care not to let dust enter transmission through switch hole.**

1) Hoist vehicle and disconnect connector from back up light switch.
2) Remove back up light switch (1) from transmission rear case.

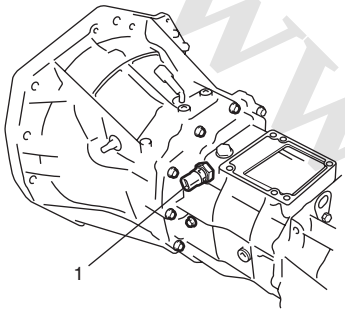


I5JB0A520005-01

### Installation

Reverse removal procedure for installation noting the following.

- Apply oil to new O-ring (1) and then install back up light switch to transmission rear case.

**Tightening torque**

**Back up light switch (a): 23 N·m (2.3 kgf-m, 17.0 lb-ft)**

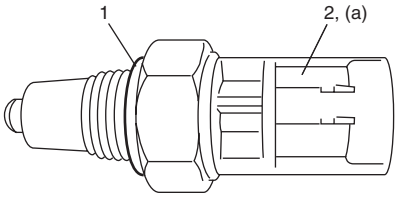


I5JB0A520004-01

- Check back up light for proper function with ignition switch turned ON and reverse position.

## Back Up Light Switch Inspection

S5JB0A5206008

Check back up light switch for function using ohmmeter. If resistance is not as specified below, replace back up light switch.

**Back up lamp switch specification**

**Switch ON (Push): Continuity**

**Switch OFF (Release): No continuity**

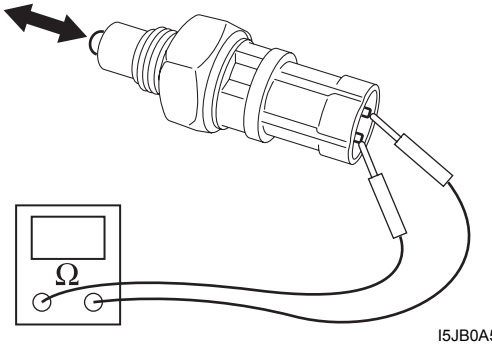


I5JB0A520006-01

## Gear Shift Control Lever Rear Case Assembly Removal and Installation

S5JB0A5206028

### Removal

1) Dismount transmission assembly from vehicle referring to “Manual Transmission Assembly Dismounting and Remounting: ”
2) Remove gear shift control lever rear case assembly (1) with plate (2) from transfer case.

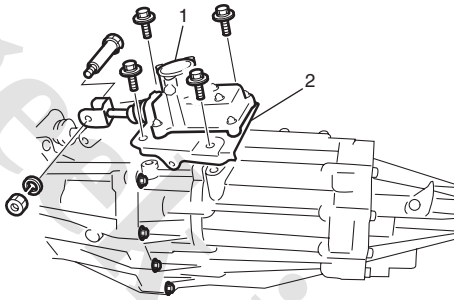


I5JB0A520007-02

www.cargeek.ir

### Installation

1) Install gear shift control lever rear case assembly with its plate to transfer case referring to figure for proper installing direction of control shaft joint bolt (2). Tighten plate bolts (1) and control shaft joint nut (3) to specified torque.

   **Tightening torque**
   **Plate bolt (a): 23 N·m (2.3 kgf-m, 17.0 lb-ft)**
   **Control shaft joint nut (b): 18 N·m (1.8 kgf-m, 13.0 lb-ft)**

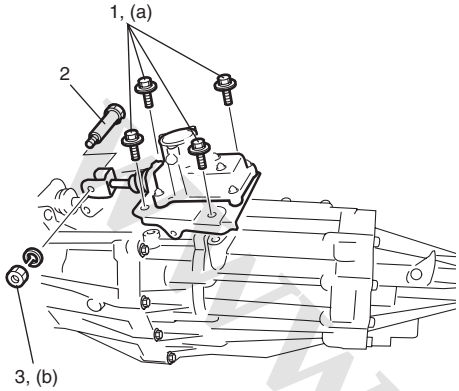


I5JB0A520008-02

2) Remount transmission assembly to vehicle referring to “Manual Transmission Assembly Dismounting and Remounting: ”

## Gear Shift Control Lever Rear Case Assembly Disassembly and Reassembly

S5JB0A5206029

Disassembly and reassembly component parts referring to “Gear Shift Control Lever Rear Case Assembly Components: ”.

## Gear Shift Control Lever Rear Case Assembly Inspection

S5JB0A5206030

- Check that gear shift control shaft moves smoothly without abnormal noise. If abnormality is found, replace defective part.
- Check bush and boot for damage and deterioration. If abnormality is found, replace defective part.

## Gear Shift Lever Front Case Assembly Removal and Installation

S5JB0A5206031

### Removal

1) Dismount transmission assembly referring to “Manual Transmission Assembly Dismounting and Remounting: ”
2) Remove gear shift lever front case assembly (1) from transmission rear case.

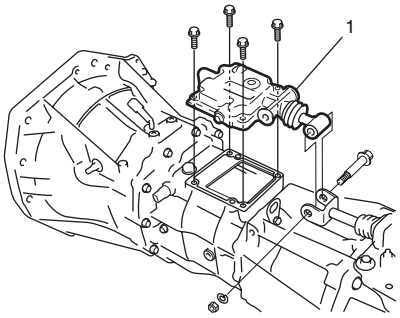


I5JB0A520009-02

### Installation

**NOTE**

- **Install gear shift lever front case to transmission rear case without using sealant for functional check.**
- **Install shift control lever and check to make sure that it shifts smoothly according to shift pattern as shown in the figure.**

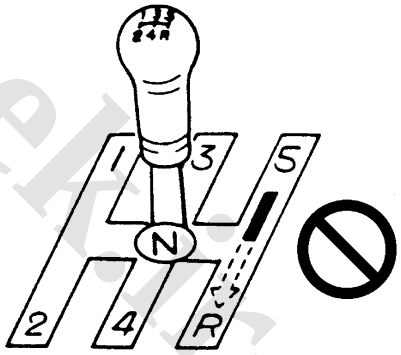


I5JB0A520010-01

www.cargeek.ir

 www.CarGeek.ir

1) Clean mating surface of both rear case and gear shift lever front case (2), and uniformly apply sealant to lever case as shown in figure by such amount that its section is 1.2 mm (0.047 in.) in diameter, and then mate it with gear shift lever front case.

   **"A": Sealant 99000–31260 (SUZUKI Bond No.1217G)**

2) Install lever case to rear case and then tighten new lever case bolts (1) to specified torque.

   **Tightening torque**
   **Gear shift lever front case bolt (a): 23 N·m (2.3 kgf-m, 17.0 lb-ft)**

3) Connect gear shift shaft (3) of lever case assembly to gear shift control shaft (4) of gear shift control lever rear case assembly referring to figure for proper installing direction of control shaft joint bolt (5). Tighten control shaft joint nut (6) to specified torque.

   **Tightening torque**
   **Control shaft joint nut (b): 18 N·m (1.8 kgf-m, 13.0 lb-ft)**

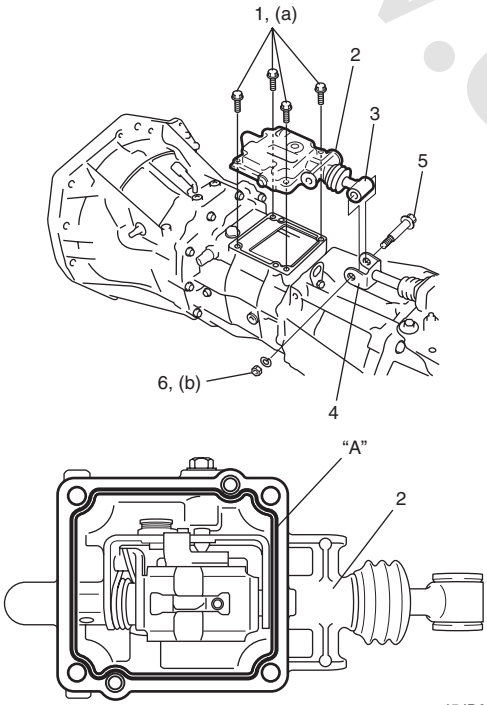


I5JB0A520011-03

4) Remount transmission assembly referring to "Manual Transmission Assembly Dismounting and Remounting: "

## Gear Shift Lever Front Case Assembly Disassembly and Reassembly

S5JB0A5206032

### Disassembly

1) Remove gear shift case plug.
2) Drive out gear shift arm pin using special tool, and then disassemble components parts.

**⚠ CAUTION**

**Be careful to disconnect gear shift shaft from gear shift lever front case so that gear shift locating ball and gear shift locating spring may be jumped out.**

**Special tool**
**(A): 09925–78210**

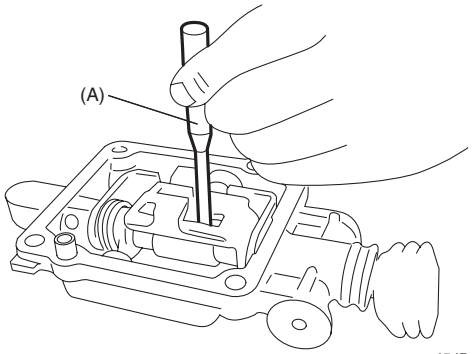


I5JB0A520012-01

### Reassembly

1) Install new gear shift shaft oil seal (1) to gear shift lever front case using special tool.

**Special tool**
**(A): 09923–46020**

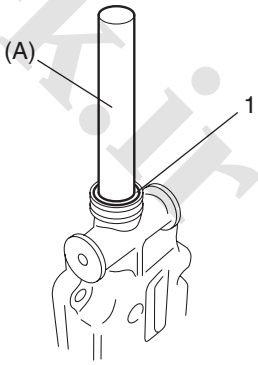


I5JB0A520013-01

www.cargeek.ir

www.CarGeek.ir


2) Assemble components parts referring to “Gear Shift Lever Front Case Assembly Components: ”.
3) Set new gear shift arm inner pin (1) and outer pin (2) facing each gap (“a”, “b”) as shown in figure.
Drive gear shift arm pins by using special tool, till the length “c” becomes the specified. (The length “c” is the length of the pin protrusion from gear shift shaft (4) and select arm (3)).

**Special tool**
**(A): 09925–78210**

**Gear shift arm pin protrusion “c”: 0.5–1.5 mm (0.020–0.059 in.)**

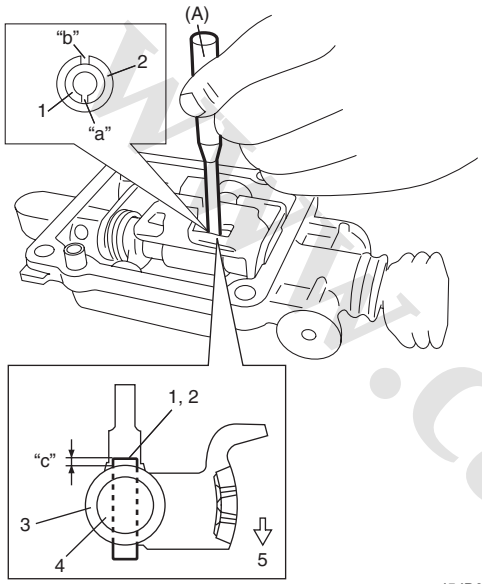


I5JB0A520014-01

| | |
|---|---|
| 5. | Case side |

## Gear Shift Lever Front Case Assembly Inspection

S5JB0A5206033

- Check that gear shift shaft moves smoothly without abnormal noise. If abnormality is found, replace defective part.
- Check bushes and boot for damage and deterioration. If abnormality is found, replace defective part.

## Engine Rear Mounting Replacement

S5JB0A5206010

When replacement of mounting parts are necessary, torque bolts as specified below.

**Tightening torque**
**Engine rear mounting No.1 bolt (a): 55 N·m (5.5 kgf-m, 40.0 lb-ft)**
**Engine rear mounting member bolt (b): 55 N·m (5.5 kgf-m, 40.0 lb-ft)**
**Engine rear mounting No.2 bolt (c): 55 N·m (5.5 kgf-m, 40.0 lb-ft)**

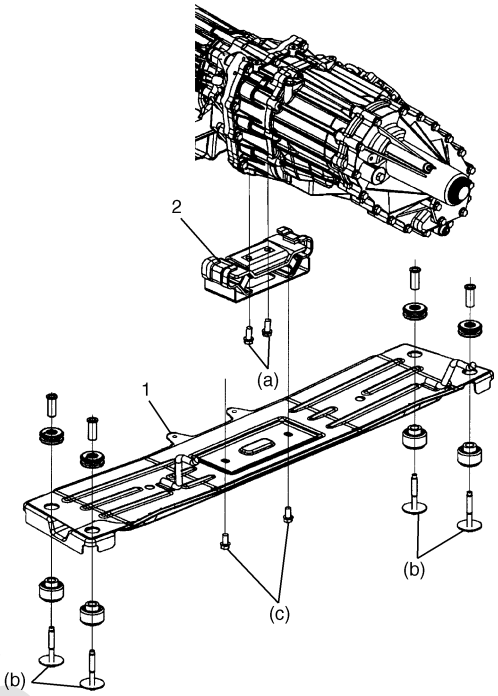


I5JB0A520015-01

| | |
|---|---|
| 1. | Engine rear mounting member |
| 2. | Engine rear mounting |

## Manual Transmission Assembly Dismounting and Remounting

S5JB0A5206011

### Dismounting

1) Disconnect negative (–) cable of battery.
2) Remove transmission shift control lever referring to “Transmission Shift Control Lever Removal and Installation: ”.
3) Detach engine harness clamps and ground wire harness from transmission front case.
4) Remove starting motor fastening bolts (2) and transmission fastening bolts (1).

www.cargeek.ir

 www.CarGeek.ir

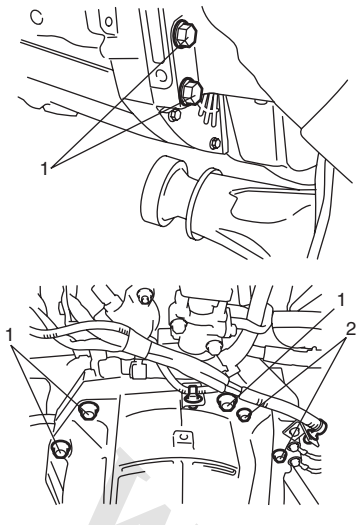


I5JB0A520016-01

5) Disconnect clutch fluid joint from pipe of clutch operating cylinder assembly referring to “Clutch Operating Cylinder Assembly Removal and Installation: in Section 5C”.
6) Hoist vehicle.
7) Drain oil from transmission and transfer.
8) Remove propeller shafts referring to “Propeller Shaft Removal and Installation: in Section 3D”.
9) Remove exhaust No. 2 pipe.
10) Remove engine under cover.
11) Remove clutch housing lower plates (1).
12) Remove transmission fastening nut (2) and bolts (3).

I5JB0A520028-01

13) Disconnect the following couplers and release their harness from clamps.
    - Back up light switch
    - Transfer shift actuator (for J20 engine model)
    - 4L/N switch (for J20 engine model)
    - Center differential lock switch (for J20 engine model)
14) Apply transmission jack (1) and remove engine rear mounting member (2) taking off its bolts.

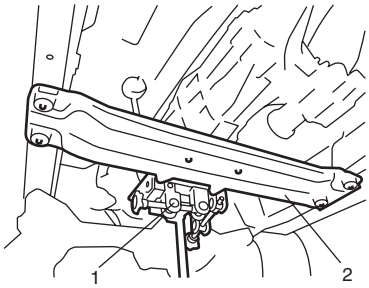


I5JB0A520029-01

15) After removing mounting member, move rearward transmission and transfer assemblies placed on jack and then lower them.
16) Separate gear shift control lever rear case assembly (2) and transfer assembly (3) from transmission assembly (1).

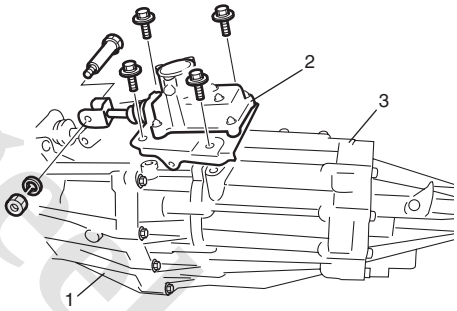


I5JB0A520030-02

www.cargeek.ir

**Remounting**

For remounting, reverse dismounting procedure.

- Apply grease to input shaft.

  **"A": Grease 99000–25010 (SUZUKI Super Grease A)**

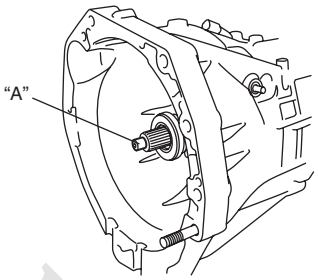


I5JB0A520031-01

- Slant the rear of the engine down, using support device (1) and install transmission to engine.

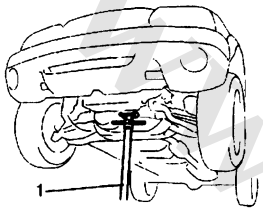


I3JA01520024-01

- Use specified torques as given below.

  **Tightening torque**
  **Transmission to engine bolt and nut (a): 85 N·m ( 8.5 kgf-m, 61.5 lb-ft)**
  **Engine rear mounting member bolt (b): 55 N·m ( 5.5 kgf-m, 40.0 lb-ft)**
  **Clutch housing lower plate bolt (c): 11 N·m (1.1 kgf-m, 8.0 lb-ft)**
  **Engine rear mounting No.2 bolt (d): 55 N·m (5.5 kgf-m, 40.0 lb-ft)**

- Set each clamp for wiring and hose securely.
- Install shift control lever referring to "Transmission Shift Control Lever Removal and Installation: ".
- Connect clutch fluid joint to pipe of clutch operating cylinder assembly referring to "Clutch Operating Cylinder Assembly Removal and Installation: in Section 5C".
- Install exhaust No.2 pipe referring to "Exhaust System Components: in Section 1K".
- Fill gear oil to transmission referring to "Manual Transmission Oil Change: ".
- Fill gear oil to transfer referring to "Transfer Oil Change: Motor-Shift Type (Transfer with Shift Actuator) in Section 3C" or "Transfer Oil Change: Non-Shift Type (Transfer without Shift Actuator) in Section 3C".
- Connect battery and check function of engine, clutch, transmission and transfer.
- Install propeller shafts referring to "Propeller Shaft Removal and Installation: in Section 3D".

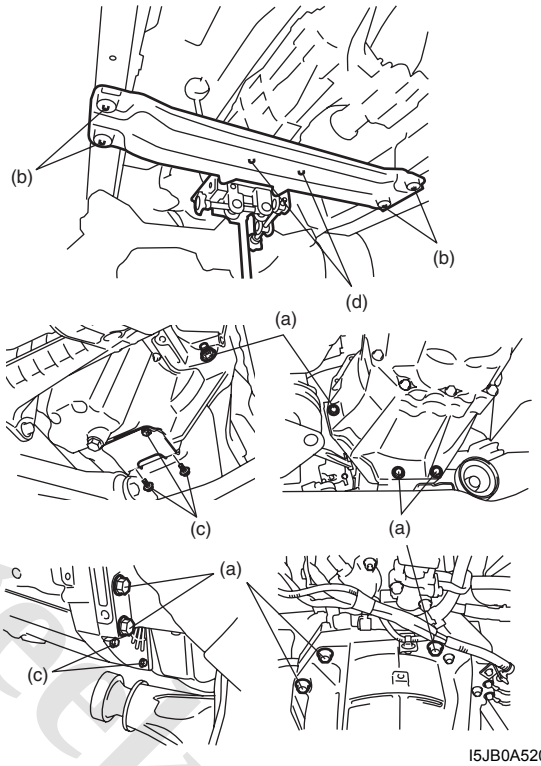


I5JB0A520032-01

www.cargeek.ir

 www.CarGeek.ir

## Manual Transmission Unit Disassembly

S5JB0A5206012

1) Remove clutch operating cylinder assembly from transmission front case referring to “Clutch Operating Cylinder Assembly Removal and Installation: in Section 5C”
2) Remove gear shift control lever rear cause assembly and gear shift lever front case assembly referring to “Gear Shift Control Lever Rear Case Assembly Removal and Installation: ” and “Gear Shift Lever Front Case Assembly Removal and Installation: ”.
3) Separate transfer assembly (1) from transmission assembly.

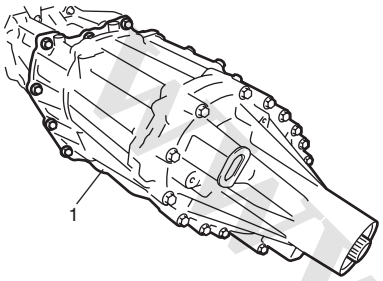


I5JB0A520033-01

4) Remove adapter case (1) from rear case (2).
5) Remove output shaft assembly (3) from adapter case.

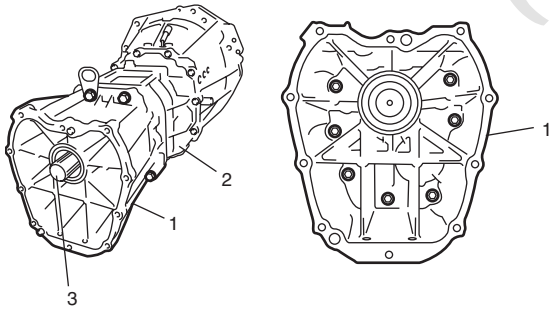


I5JB0A520034-01

6) Remove reverse shaft bolt (1) and back up light switch (2).

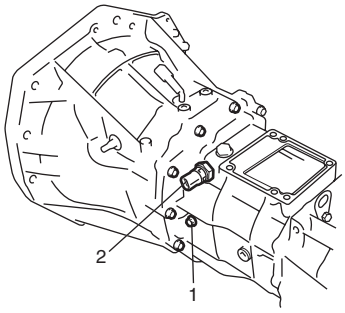


I5JB0A520035-01

7) Remove gear shift locating bolts (1), then take out locating springs (2) and gear shift shaft balls (3).
8) Remove rear to front case bolts (4), then separate rear case from front case tapping front case flange with plastic hammer.

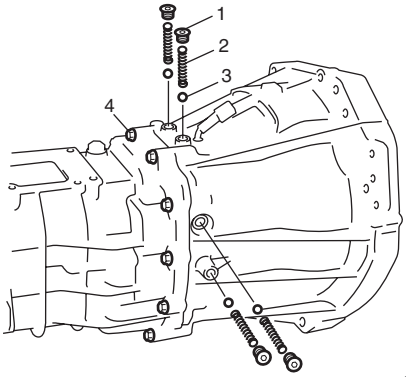


I5JB0A520036-01

9) Remove oil gutter.
10) Remove reverse shaft assembly (1).
11) Remove low gear shift inverse lever (4).
12) Remove low speed gear shift shaft (2) and 5th & reverse gear shift fork (3) with 5th speed synchronizer sleeve (5).

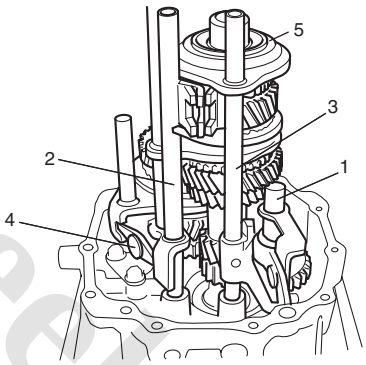


I5JB0A520037-01

13) Remove input shaft needle bearing, 5th speed synchronizer ring and 5th speed synchronizer levers.
14) Remove input shaft front bearing circlip (1) from case using special tool.

**Special tool**
**(A): 09900–06106**

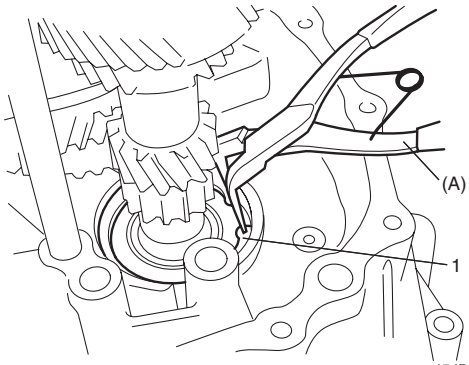


I5JB0A520038-01

www.cargeek.ir

15) Remove input shaft assembly (1), countershaft assembly (2), high speed gear shift fork (3) and low speed gear shift fork (4) as assembly from front case (5) tapping input shaft end by plastic hammer lightly.

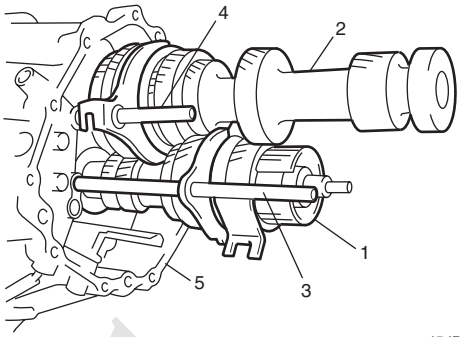


I5JB0A520039-01

## Manual Transmission Unit Reassembly

S5JB0A5206013

1) Assemble input shaft assembly (1), countershaft assembly (2), high speed gear shift fork (3) and low speed gear shift fork (4), then install them all together into front case (5).

**⚠ CAUTION**

**Take care not to damage oil seal lip by input shaft, or oil leakage may take place.**

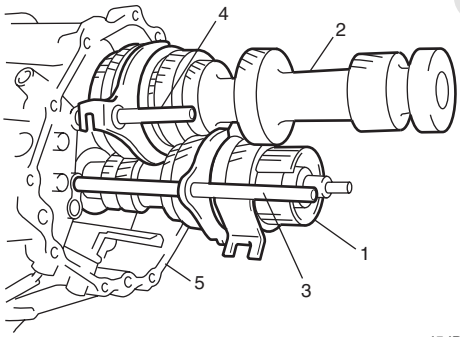


I5JB0A520039-01

2) Install input shaft front bearing snap ring (1) using special tool.

**Special tool**
**(A): 09900–06106**

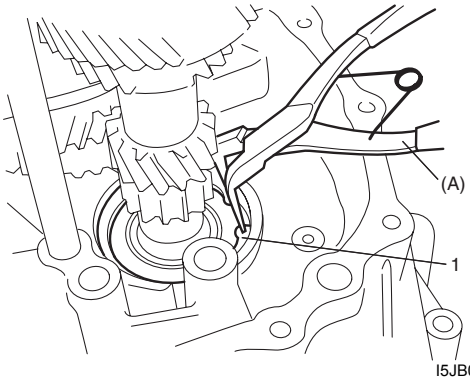


I5JB0A520040-01

3) Install low speed gear shift shaft (1) and low gear shift inverse lever (2) and tighten with new bolt (3).

**Tightening torque**
**Low gear shift inverse lever bolt (a): 23 N·m (2.3 kgf-m, 17.0 lb-ft)**

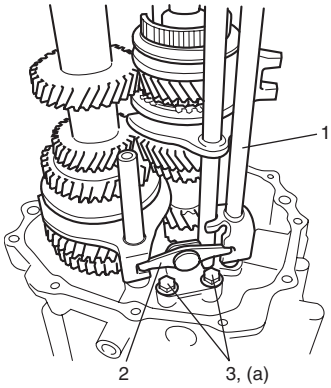


I5JB0A520041-02

4) Fit 5th & reverse gear shift fork (1) to 5th speed synchronizer sleeve (2), and install them into input shaft and front case in specified direction as shown in figure.

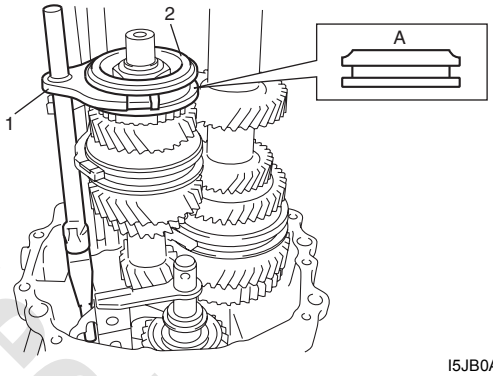


I5JB0A520042-01

| A: Chamfered side |
|---|

5) Set reverse idler gear (1), reverse gear shift lever (2) and reverse gear shaft washer (4), insert reverse gear shaft (3) into case through idler gear and then align hole “B” in shaft with protrusion “A” in case.

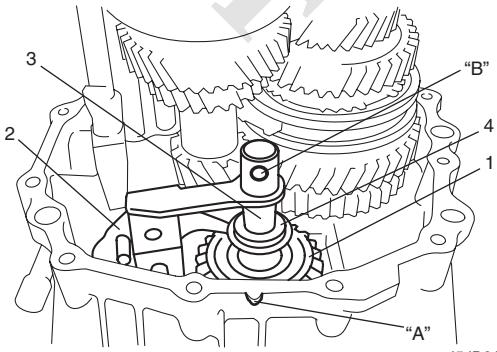


I5JB0A520043-01

www.cargeek.ir

 www.CarGeek.ir

6) Install oil gutter.
7) Install 5th speed synchronizer levers and 5th speed synchronizer ring as follows.
   a) Fit 5th speed synchronizer levers (1) to hub (2) aligning protrusion “A” of 5th speed synchronizer levers with groove of hub.

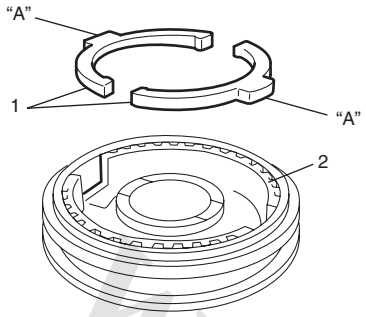


I5JB0A520044-01

   b) Install synchronizer ring (1) to hub (2) in specified direction as shown in figure.

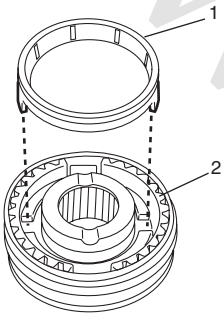


I5JB0A520045-01

8) Install input shaft needle bearing to end of input shaft.
9) Clean mating surfaces of both front and rear cases, and uniformly apply sealant to front case (1) as shown in figure by such amount that its section is 1.2 mm (0.047 in.) in diameter, and then mate it with rear case.

**“A”: Sealant 99000–31260 (SUZUKI Bond No.1217G)**

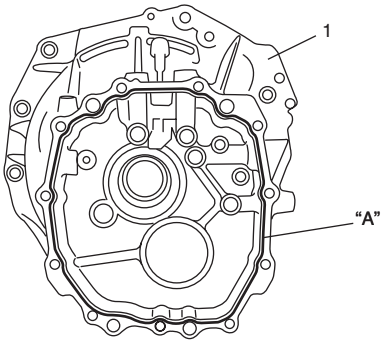


I5JB0A520046-01

10) Install rear case to front case. Tighten case bolts (1) to specified torque.

**Tightening torque**
**Transmission case bolt (a): 23 N·m (2.3 kgf-m, 17.0 lb-ft)**

11) Apply thread lock cement to reverse shaft bolt (2), and tighten it.

**“B”: Thread lock cement 99000–32110 (Thread Lock Cement Super 1322)**

**Tightening torque**
**Reverse shaft bolt (b): 23 N·m (2.3 kgf-m, 17.0 lb-ft)**

12) Install back up light switch (3) referring to “Back Up Light Switch Removal and Installation: ”.

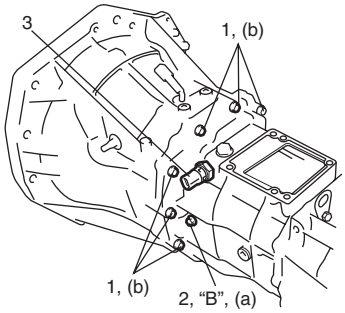


I5JB0A520047-01

13) Apply grease to gear shift shaft balls (1) and locating springs (2), then install them.
Apply thread lock cement to gear shift locating bolts (3), and then tighten them.

**“A”: Grease 99000–25010 (SUZUKI Super Grease A)**
**“B”: Thread lock cement 99000–32110 (Thread Lock Cement Super 1322)**

**Tightening torque**
**Gear shift locating bolt (a): 23 N·m (2.3 kgf-m, 17.0 lb-ft)**

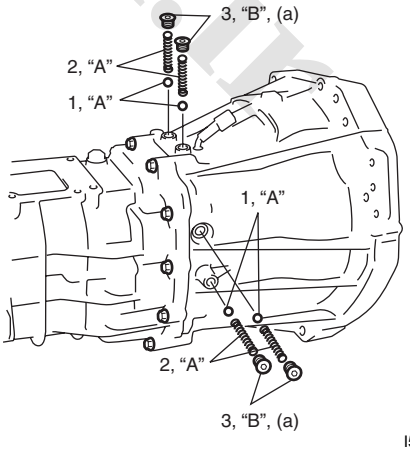


I5JB0A520048-01

www.cargeek.ir

14) Install output shaft assembly into rear case.

15) Select a countershaft shim and output shaft shim as follows.

a) Measure depth “a” from mating surface of adapter case (1) to face processed for installation of countershaft rear bearing (2) and measure depth “c” from mating surface of adapter case to face processed for installation of output shaft rear bearing (5) using vernier caliper.

b) Measure height “b” from mating surface of rear case (3) to countershaft rear bearing (2) and “d” from mating surface of rear case (3) to output shaft bearing (6) using vernier caliper.

c) Calculate “a” – “b” and “c” – “d”, and select a shim according to the following table.

**Countershaft shim selection table**

| Clearance “a” – “b” | Thickness of countershaft shim |
|---|---|
| 1.15 – 1.24 mm (0.046 – 0.048 in.) | 0.90 mm (0.035 in.) |
| 1.25 – 1.34 mm (0.050 – 0.052 in.) | 1.00 mm (0.039 in.) |
| 1.35 – 1.44 mm (0.054 – 0.056 in.) | 1.10 mm (0.043 in.) |
| 1.45 – 1.54 mm (0.057 – 0.060 in.) | 1.20 mm (0.047 in.) |
| 1.55 – 1.64 mm (0.061 – 0.064 in.) | 1.30 mm (0.051 in.) |
| 1.65 – 1.74 mm (0.065 – 0.068 in.) | 1.40 mm (0.055 in.) |
| 1.75 – 1.84 mm (0.069 – 0.072 in.) | 1.50 mm (0.059 in.) |
| 1.85 – 1.94 mm (0.073 – 0.076 in.) | 1.60 mm (0.063 in.) |
| 1.95 – 2.04 mm (0.077 – 0.080 in.) | 1.70 mm (0.067 in.) |
| 2.05 – 2.14 mm (0.081 – 0.084 in.) | 1.80 mm (0.071 in.) |
| 2.15 – 2.24 mm (0.085 – 0.088 in.) | 1.90 (0.90 + 1.00) mm (0.075 (0.035 + 0.039) in.) |

**Output shaft shim selection table**

| Clearance “c” – “d” | Thickness of countershaft shim |
|---|---|
| 0 – 0.09 mm (0 – 0.04 in.) | — |
| 0.1 – 0.19 mm (0.004 – 0.007 in.) | 0.1 mm (0.004 in.) |
| 0.2 – 0.29 mm (0.008 – 0.011 in.) | 0.2 mm (0.008 in.) |
| 0.3 – 0.39 mm (0.012 – 0.015 in.) | 0.3 mm (0.012 in.) |
| 0.4 – 0.49 mm (0.016 – 0.019 in.) | 0.4 mm (0.016 in.) |
| 0.5 – 0.59 mm (0.020 – 0.023 in.) | 0.5 (0.2 + 0.3) mm (0.020 (0.008 + 0.012) in.) |
| 0.6 – 0.69 mm (0.024 – 0.027 in.) | 0.6 (0.2 + 0.4) mm (0.024 (0.008 + 0.016) in.) |
| 0.7 – 0.79 mm (0.028 – 0.031 in.) | 0.7 (0.3 + 0.4) mm (0.028 (0.012 + 0.016) in.) |

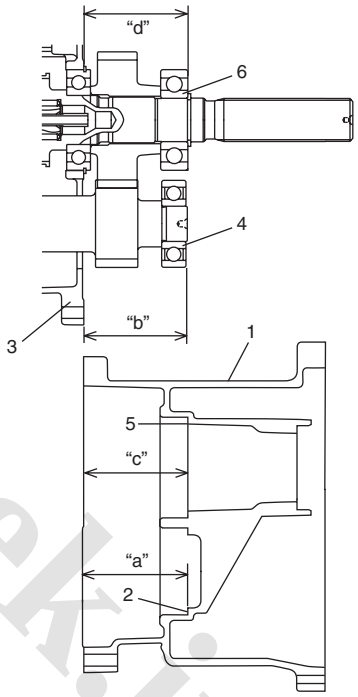

I5JB0A520049-02

16) Install selected countershaft shim and output shaft shim to adapter case.

17) Clean mating surface of both rear case (1) and adapter case, and uniformly apply sealant to rear case as shown in figure by such amount that its section is 1.2 mm (0.047 in.) in diameter, and then mate it with adapter case.

**“A”: Sealant 99000–31260 (SUZUKI Bond No.1217G)**

www.cargeek.ir

 www.CarGeek.ir

18) Install rear case to adapter case. Tighten case bolts (2) to specified torque.

**Tightening torque**
**Adapter case bolt (a): 23 N·m (2.3 kgf-m, 17.0 lb-ft)**

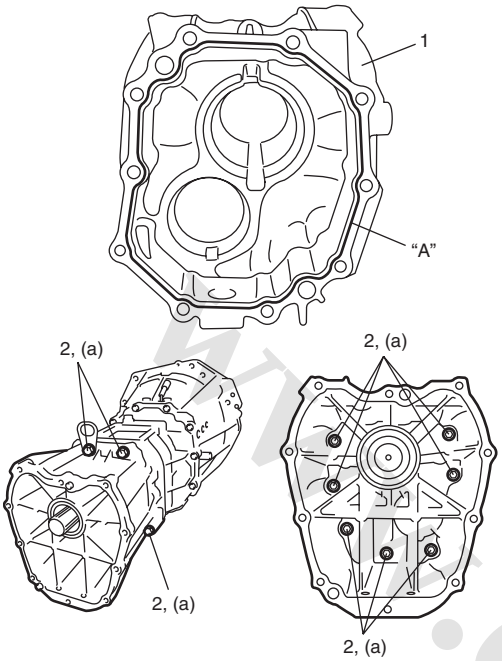


I5JB0A520050-01

19) Install transfer assembly to transmission assembly. Tighten transfer fastening bolts to specified torque referring to "Transfer Assembly Components: Motor-Shift Type (Transfer with Shift Actuator) in Section 3C" or "Transfer Assembly Components: Non-Shift Type (Transfer without Shift Actuator) in Section 3C".
20) Install gear shift control lever rear case assembly and gear shift lever front case assembly referring to "Gear Shift Control Lever Rear Case Assembly Removal and Installation: " and "Gear Shift Lever Front Case Assembly Removal and Installation: ".
21) Install clutch operating cylinder assembly to transmission front case referring to "Clutch Operating Cylinder Assembly Removal and Installation: in Section 5C".

## Locating Spring Inspection

S5JB0A5206034

Check locating springs for deterioration and replace with new ones if necessary.

**<u>Locating spring free length</u>**
**Standard: 44.6 mm (1.756 in.)**
**Service limit: 40.1 mm (1.579 in.)**

## Input Shaft Disassembly

S5JB0A5206016

1) Remove snap ring.
2) Remove input shaft front bearing (1) using bearing puller and hydraulic press.

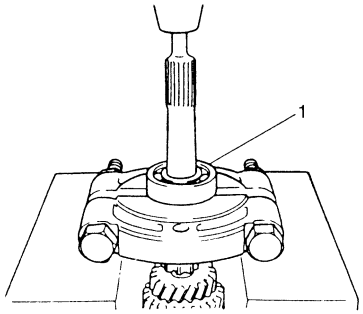


I5JB0A520051-01

3) Remove input shaft union.
4) Hold hatched area (5) of input shaft assembly (1) with "V" blocks (4) on vise (2) or the like to stop rotation of shaft, undo caulking and input shaft 5th hub nut (3).

**⚠ CAUTION**

**Do not hold spline, gear teeth or abrasived surface of shaft with vise through "V" blocks or the like, otherwise shaft components may be damaged.**

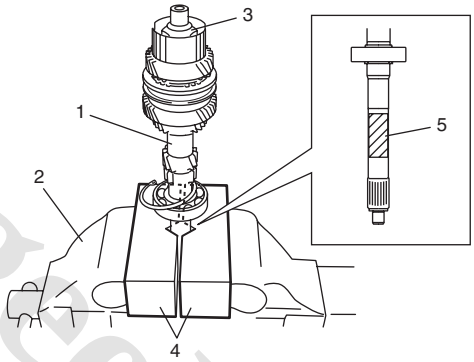


I5JB0A520052-01

5) Apply bearing puller to 4th gear (1), and drive out 5th speed synchronizer hub (2), 3rd gear (3), high speed gear needle bearings, 3rd gear bush, high speed synchronizer assembly (4) and 4th gear all at once from input shaft using metal stick (5) and press.

**⚠ CAUTION**

**To avoid gear teeth from being damaged, support 4th gear at flat side of bearing puller.**

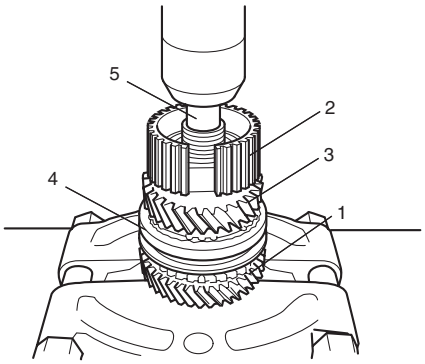


I5JB0A520053-01

www.cargeek.ir

www.CarGeek.ir


## Input Shaft Inspection

S5JB0A5206017

- Check clearance “a” between synchronizer ring (2) and gear (1), key slot width “b” in synchronizer ring and each chamfered tooth of gear and synchronizer ring and replace with new one, if necessary. Also, check gear tooth.

**Clearance “a” between synchronizer ring and gear (Input shaft) (3rd and 4th)**
**Standard: 1.0 – 1.4 mm (0.040 – 0.055 in.)**
**Service limit: 0.5 mm (0.020 in.)**

**Key slot width “b” (3rd and 4th synchronizer ring)**
**Standard: 10.0 – 10.2 mm (0.394 – 0.401 in.)**
**Limit: 10.45 mm (0.411 in.)**

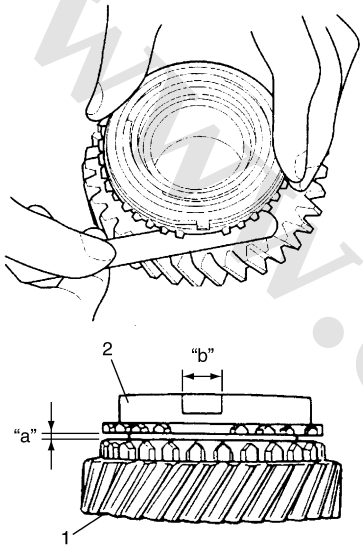


I5JB0A520054-01

- Measure width of high speed gear shift fork end “a” and groove width of high speed synchronizer sleeve “b”, 5th & reverse gear shift fork end “a” and groove width of 5th speed synchronizer sleeve “b” and then calculate clearance “c” as follows:

Clearance “c” = “b” – “a”

If clearance exceeds limit, replace fork bush (1) and sleeve.

**Clearance “c” between fork and sleeve for high speed and 5th speed**
**Standard: 0.3 – 0.5 mm (0.012 – 0.020 in.)**
**Limit: 1.0 mm (0.039 in.)**

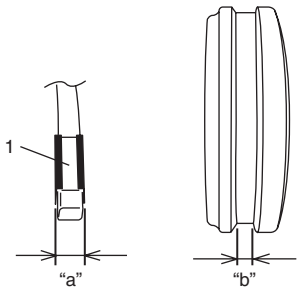


I5JB0A520055-01

- Check diameter of input shaft (1) and needle bush (2) as shown in the figure. If measured value is out of specification, replace input shaft and/or bush.

**Input shaft and needle bush specifications (diameter)**

| Measuring portion | Standard |
|---|---|
| “a” | 30.002 – 30.015 mm (1.1812 – 1.1816 in.) |
| “b” | 34.950 – 34.991 mm (1.3760 – 1.3775 in.) |
| “c” | 30.959 – 30.975 mm (1.2189 – 1.2194 in.) |
| “d” | 27.987 – 28.000 mm (1.1018 – 1.1023 in.) |
| “e” | 27.967 – 27.980 mm (1.1011 – 1.1015 in.) |
| “f” | 19.975 – 19.991 mm (0.7865 – 0.7870 in.) |
| “g” | 28.000 – 28.013 mm (1.1024 – 1.1028 in.) |
| “h” | 34.975 – 34.991 mm (1.3770 – 1.3775 in.) |

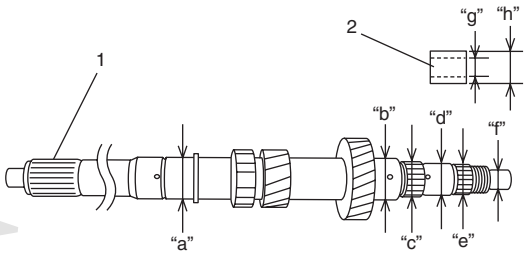


I5JB0A520056-01

- Using “V” blocks (1) and dial gauge (2), check runout. If runout exceeds limit below, replace input shaft (3).

**Input shaft runout**
**Limit: 0.02 mm (0.0008 in.)**

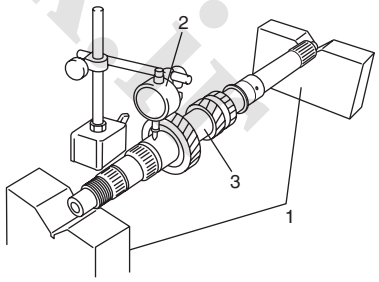


I5JB0A520057-01

www.cargeek.ir

 www.CarGeek.ir

- Using cylinder gauge (1), check inside diameter of each gear. If its inside diameter exceeds specification, replace it.

  **Inside diameter (standard) of gear**
  **3rd and 4th gear: 40.000 – 40.025 mm (1.5748 – 1.5757 in.)**

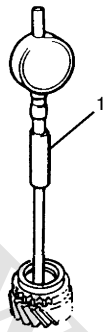


IYSQ01522099-01

- Check chamfered part of each sleeve for damage and excessive wear, and replace as necessary.
- Check each synchronizer key and synchronizer spring and replace as necessary.
- Check spline portions and replace parts if excessive wear is found.

## Input Shaft Reassembly

S5JB0A5206018

**NOTE**

- **Before installation, wash each part and apply specified gear oil to sliding faces of bearing and gear.**
- **Use new snap rings on shaft for installation. Don't reuse snap rings.**

1) Clean all components thoroughly, inspect them for any abnormality and replace with new ones as necessary.
2) To ensure lubrication, air blow oil holes (1) and make sure that they are free from any obstruction.

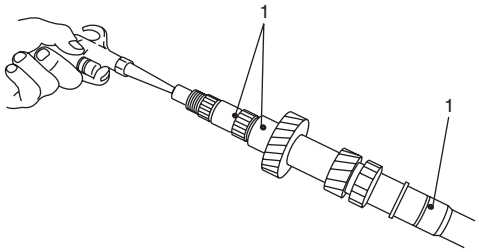


I5JB0A520058-01

3) Drive in input shaft front bearing (1) to input shaft using special tool and hammer and then install snap ring in specified direction as shown in figure.

   **Special tool**
   **(A): 09940–51710**

**NOTE**

**Input shaft front bearing circlip (2) must be installed before input shaft front bearing is installed.**

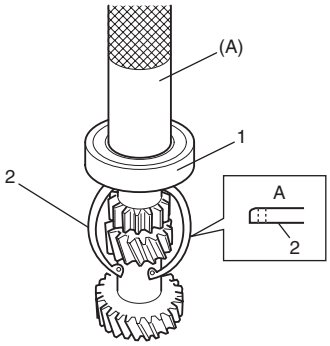


I5JB0A520059-01

| | |
|---|---|
| A: | Bearing side |

4) Apply oil to high speed gear needle bearing (5), and then install needle bearing, 4th gear (5) and high speed synchronizer ring (7) to input shaft.
5) Assemble synchronizer sleeve (4) and hub (3) as follows.
   a) Fit high speed synchronizer sleeve to hub in specified direction as shown in figure.
   b) Insert 3 keys (2) to hub.
   c) Set springs (1) at specified position as shown in figure.

   **Synchronizer key installation position**
   **: A = B**

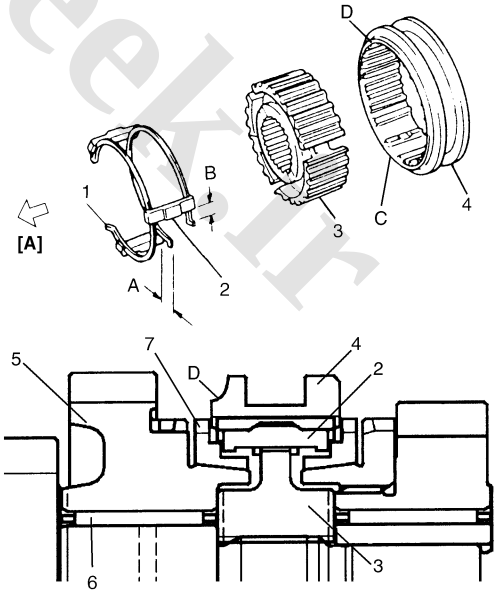


I5JB0A520060-01

| | |
|---|---|
| [A]: | 4th gear side |
| C: | Key way |
| D: | Projecting end |

www.cargeek.ir

6) Drive in high speed synchronizer assembly (1) using special tool and hammer.

**NOTE**

- **While press-fitting sleeve & hub, make sure that synchronizer ring key slots (2) are aligned with keys in sleeve & hub assembly.**
- **Check free rotation of 4th gear after press fitting sleeve & hub assembly.**

**Special tool**
**(A): 09913–84510**

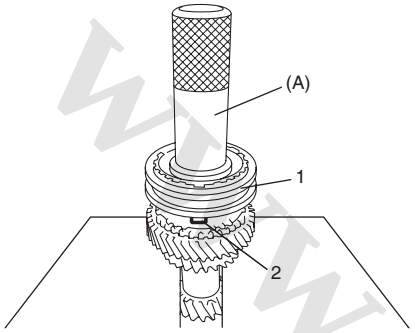

I5JB0A520061-01

7) Check 4th gear (1) thrust clearance by using thickness gauge. If clearance is out of specification, repress-fit or replace defective part.

**4th gear thrust clearance**
**"a": 0.10 – 0.25 mm (0.004 – 0.010 in.)**

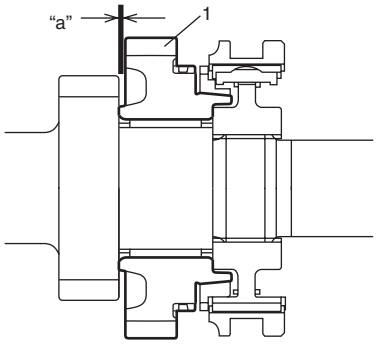

I5JB0A520062-01

8) Apply oil to high speed gear needle bearing, and then install 3rd gear bush (1), high speed gear needle bearing (2) and 3rd gear (3).

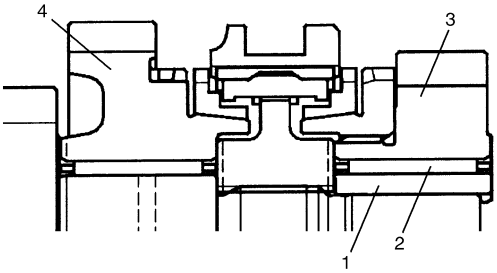

I5JB0A520063-01

| | |
|---|---|
| 4. | 4th gear |

9) Press-fit 5th speed synchronizer hub (1) using special tool and hammer.

**Special tool**
**(A): 09913–84510**

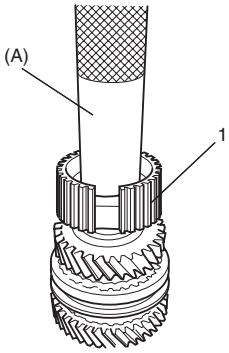

I5JB0A520064-01

10) Check 3rd gear (1) thrust clearance by using thickness gauge. If clearance is out of specification, repress-fit or replace defective part.

**3rd gear thrust clearance**
**"a": 0.10 – 0.25 mm (0.004 – 0.010 in.)**

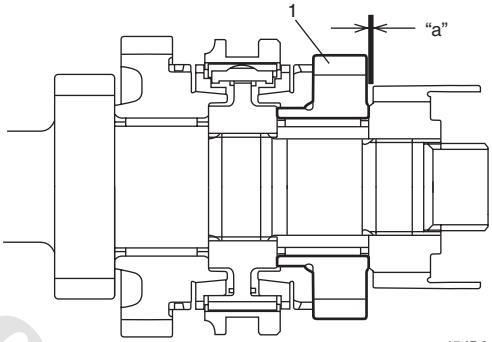

I5JB0A520065-01

11) Tighten input shaft 5th hub nut to specified torque in the same manner as step 4) of "Input Shaft Disassembly: ".

**⚠ CAUTION**

**Do not hold spline, gear teeth or abrasived surface of shaft with vise through "V" blocks or the like, otherwise shaft components may be damaged.**

**Tightening torque**
**Input shaft 5th hub nut: 210 N·m (21.0 kgf-m, 152.0 lb-ft)**

www.cargeek.ir

 www.CarGeek.ir

12) Caulk input shaft 5th hub nut (2) using caulking tool.
13) Drive in new input shaft union (1) using puller and hydraulic press.

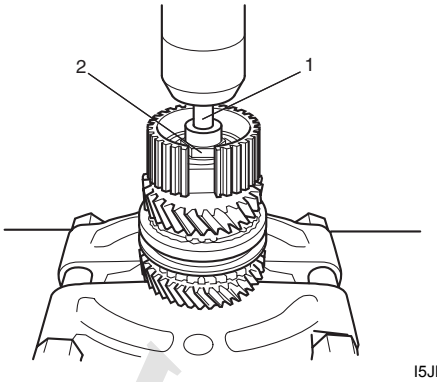


I5JB0A520066-01

## Countershaft Disassembly and Assembly

S5JB0A5206019

### Disassembly

1) Remove countershaft rear bearing (1) using bearing puller, metal stick (2) and hydraulic press.

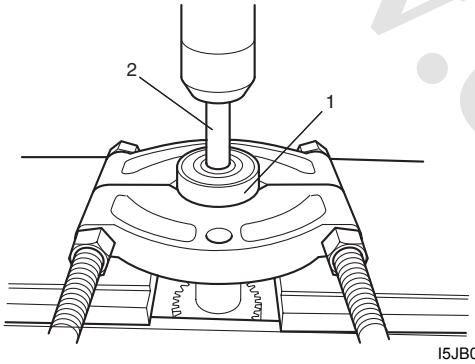


I5JB0A520067-01

2) Hold hatched area (5) of countershaft assembly (1) with “V” blocks (4) on vise (2) or the like to stop rotation of shaft, undo caulking and countershaft front bearing nut (3).

**⚠ CAUTION**

**Do not hold spline, gear teeth or abrasived surface of shaft with “V” blocks on vise or the like, otherwise shaft may be damaged.**

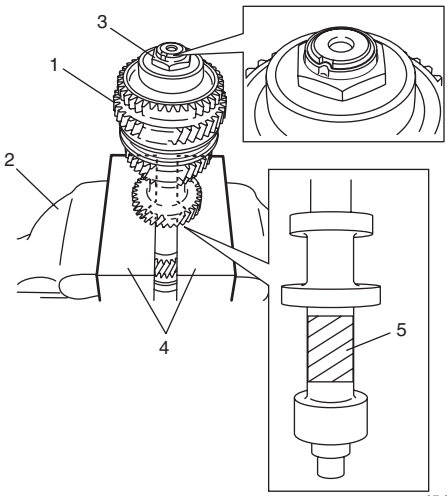


I5JB0A520068-01

3) Apply bearing puller to 2nd gear (1), and drive out countershaft front bearing (2), countershaft reverse gear (3), 1st gear (4), countershaft gear needle bearings, countershaft low needle bearing bush, low speed synchronizer assembly (5) and 2nd gear all at once from countershaft using metal stick (6) and hydraulic press.

**⚠ CAUTION**

**To avoid gear teeth from being damaged, support 2nd gear at flat side of bearing puller.**

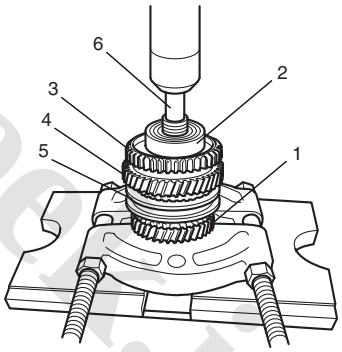


I5JB0A520069-01

www.cargeek.ir

**Assembly**

1) Clean all components thoroughly, inspect them for any abnormality and replace with new ones as necessary.
2) To ensure lubrication, air blow oil holes (1) and make sure that they are free from any obstruction.

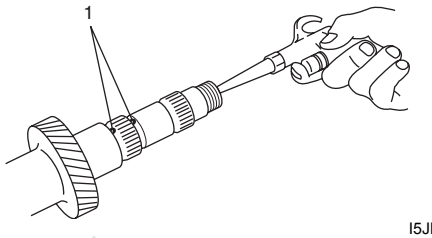


I5JB0A520070-01

3) Drive in countershaft rear bearing (1) using special tool and hammer.

**Special tool**
**(A): 09913–84510**

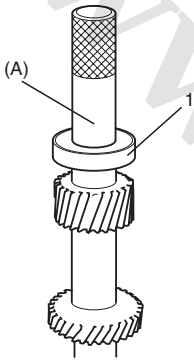


I5JB0A520071-01

4) Apply oil to countershaft gear needle bearing (6), and then install needle bearing, 2nd gear (5) and low speed synchronizer ring (7).
5) Assemble synchronizer sleeve (4) and hub (3) as follows.
   a) Fit low speed synchronizer sleeve to hub in specified direction as shown in figure.
   b) Insert 3 keys (2) to hub.
   c) Set springs (1) at specified position as shown in figure.

**Synchronizer key installation position**
**: A = B**

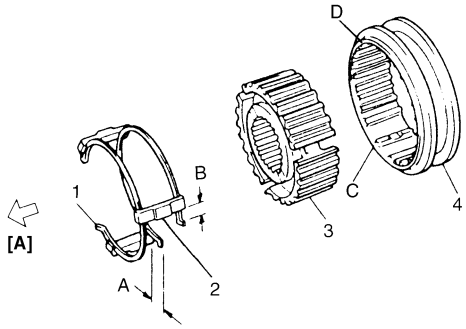


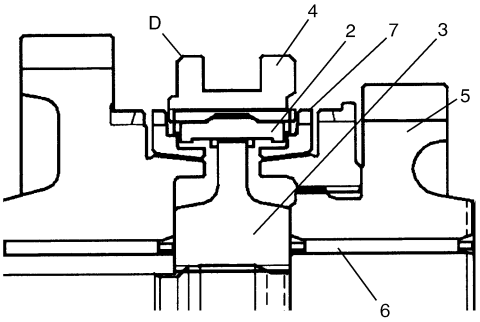


I5JB0A520072-01

| | |
|---|---|
| [A]: | 1st gear side |
| C: | Key way |
| D: | Chamfered side |

6) Drive in low speed synchronizer assembly (1) using special tool and hammer.

**NOTE**

- **While press-fitting sleeve & hub, make sure that synchronizer ring key slots (2) are aligned with keys in sleeve & hub assembly.**
- **Check free rotation of 2nd gear after press-fitting sleeve & hub assembly.**

**Special tool**
**(A): 09913–84510**

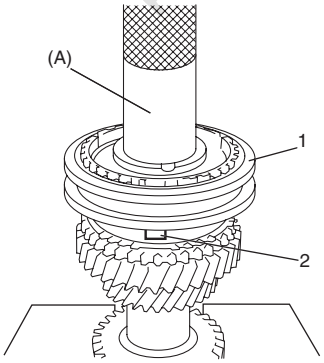


I5JB0A520073-01

www.cargeek.ir

 www.CarGeek.ir

7) Check 2nd gear (1) thrust clearance by using thickness gauge. If clearance is out of specification, repress-fit or replace defective part.

**2nd gear thrust clearance**
**"a": 0.10 – 0.25 mm (0.004 – 0.010 in.)**

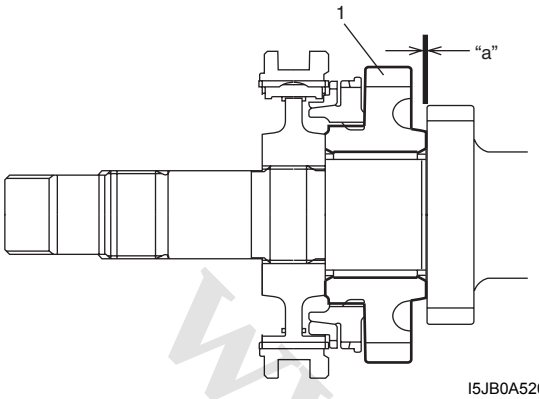


I5JB0A520074-01

8) Apply oil to countershaft gear needle bearing, and then countershaft low needle bush, needle bearing and 1st gear (1) to countershaft.

9) Press-fit countershaft reverse gear (2) using special tool and hammer.

**Special tool**
**(A): 09913–80113**

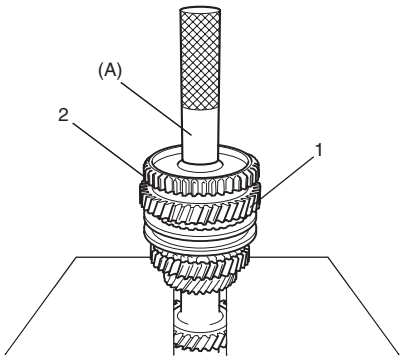


I5JB0A520075-01

10) Press-fit countershaft front bearing (1) using special tool and hammer.

**Special tool**
**(A): 09913–84510**

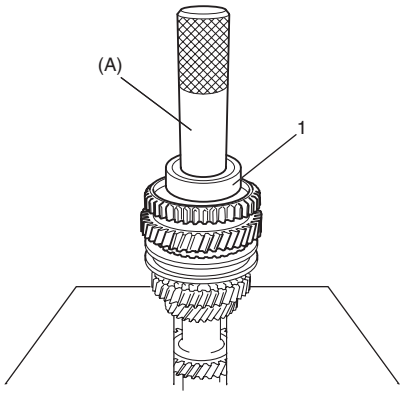


I5JB0A520076-01

11) Check low gear (1) thrust clearance by using thickness gauge. If clearance is out of specification, repress-fit or replace defective part.

**Low gear thrust clearance**
**"a": 0.10 – 0.25 mm (0.004 – 0.010 in.)**

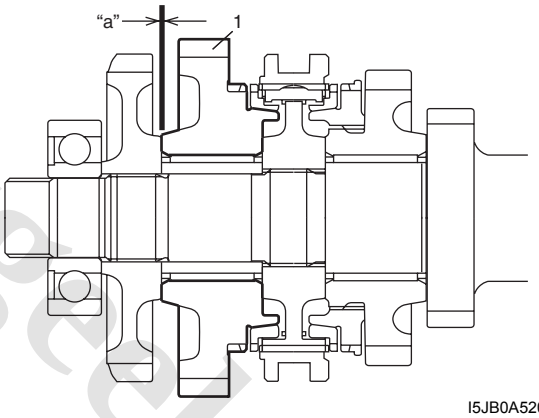


I5JB0A520077-01

12) Tighten countershaft front bearing nut to specified torque while locking counter shaft in the same manner as step 2) of "Disassembly" under "Countershaft Disassembly and Assembly: ".

**⚠ CAUTION**

**Do not hold spline, gear teeth or abrasived surface of shaft with vise through "V" blocks or the like, otherwise shaft may be damaged.**

**Tightening torque**
**Countershaft front bearing nut: 210 N·m (21.0 kgf-m, 152.0 lb-ft)**

13) Caulk countershaft front bearing nut using caulking tool and hammer.

www.cargeek.ir

## Countershaft and Reverse Idle Gear Inspection

S5JB0A5206020

- Using micrometer, check diameter of countershaft (1) and needle bush (2) as shown. If measured value is out of specification, replace counter and/or bush.

**Countershaft diameter (standard)**

| Measuring portion | Standard |
|---|---|
| "a" | 25.002 – 25.015 mm (0.9843 – 0.9848 in.) |
| "b" | 27.987 – 28.000 mm (1.1019 – 1.1023 in.) |
| "c" | 27.987 – 28.000 mm (1.1019 – 1.1023 in.) |
| "d" | 30.959 – 30.975 mm (1.2189 – 1.2194 in.) |
| "e" | 34.975 – 34.991 mm (1.3770 – 1.3775 in.) |
| "f" | 30.002 – 30.015 mm (1.1812 – 1.1816 in.) |
| "g" | 28.000 – 28.013 mm (1.1023 – 1.1028 in.) |
| "h" | 34.975 – 34.991 mm (1.3770 – 1.3776 in.) |

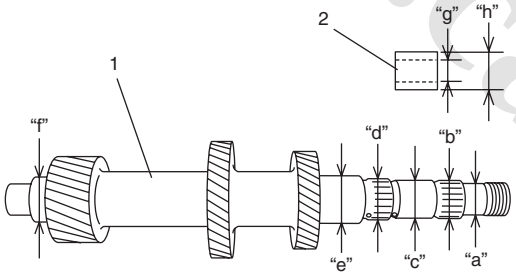


I5JB0A520078-01

- Measure width "a" of low speed gear shift fork and groove width "b" of low speed gear synchronizer sleeve and then calculate clearance "c" as follows:

Clearance "c" = "b" – "a"

If clearance exceeds limit, replace fork bush (1) and sleeve.

**Clearance "c" between fork and sleeve**
**Standard: 0.3 – 0.5 mm (0.012 – 0.020 in.)**
**Limit: 1.0 mm (0.039 in.)**

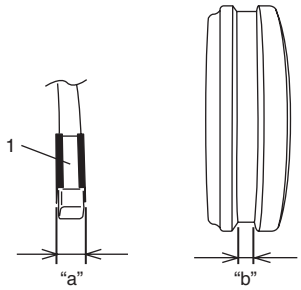


I5JB0A520055-01

- Check clearance "a" between synchronizer ring (2) and gear (1), key slot width "b" in synchronizer ring and each chamfered tooth of gear and synchronizer ring and replace with new one, if necessary. Also, check gear tooth.

**Clearance "a" between synchronizer ring and gear (Countershaft) (1st and 2nd)**
**Standard: 1.0 – 1.4 mm (0.040 – 0.055 in.)**
**Service limit: 0.5 mm (0.020 in.)**

**Key slot width "b" (1st and 2nd synchronizer ring)**
**Standard: 10.0 – 10.2 mm (0.394 – 0.401 in.)**
**Limit: 10.45 mm (0.411 in.)**

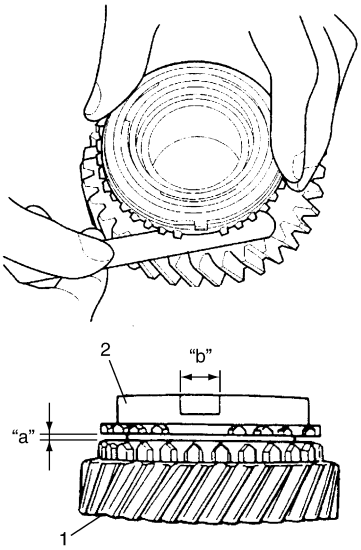


I5JB0A520079-01

- Using cylinder gauge (1), check inside diameter of countershaft 1st and 2nd gears (2). If measured value exceeds specification, replace countershaft 5th gear.

**Countershaft 1st and 2nd gears diameter**
**Standard: 40.000 – 40.025 mm (1.5748 – 1.5757 in.)**

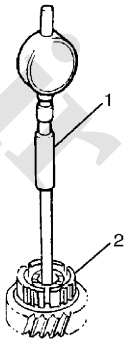


IYSQ01522122-01

www.cargeek.ir

 www.CarGeek.ir

- Check oil clearance between reverse idle gear (2) and shaft (1) measuring inside diameter “a” of gear and diameter “b” of shaft and calculate as follows:

Clearance “c” = “b” – “a”

If clearance exceeds limit, replace gear and shaft.

**Oil clearance “c” between reverse idle gear and shaft**
**Standard: 0.016 – 0.045 mm (0.0006 – 0.0018 in.)**
**Limit: 0.13 mm (0.005 in.)**

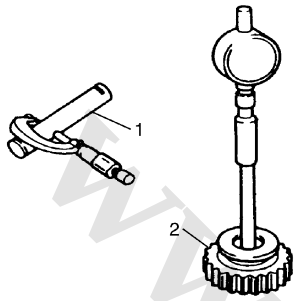

IYSQ01522123-01

- Check clearance between reverse idle gear (2) and lever (1) of reverse gear shift link.
  If clearance exceeds limit, replace gear and lever.

**Clearance between reverse idle gear and lever**
**Standard: 0.05 mm – 0.35 mm (0.002 – 0.014 in.)**
**Limit: 0.5 mm (0.020 in.)**

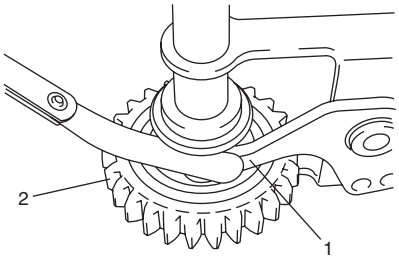

I5JB0A520080-01

## Output Shaft Disassembly and Assembly

S5JB0A5206021

### Disassembly

1) Remove output shaft rear snap ring.
2) Apply bearing puller to output shaft front bearing (1), and drive out output shaft front bearing, output shaft gear (2) and output shaft rear bearing (3) all at once from output shaft using press.

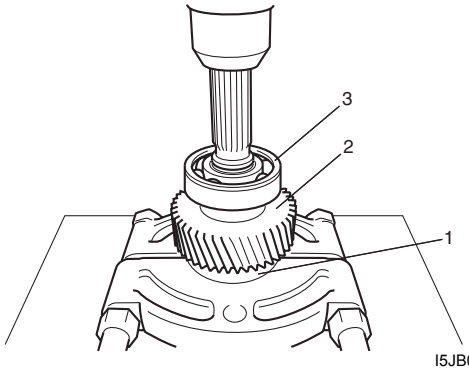

I5JB0A520081-01

### Assembly

1) Clean all components thoroughly, inspect them for any abnormality and replace with new ones as necessary.
2) Put front bearing (1) onto output shaft facing groove (4) side to output shaft gear (2) and drive in output shaft front bearing, output shaft gear and output shaft rear bearing (3) all together using special tool and hammer.

**Special tool**
**(A): 09940–51710**

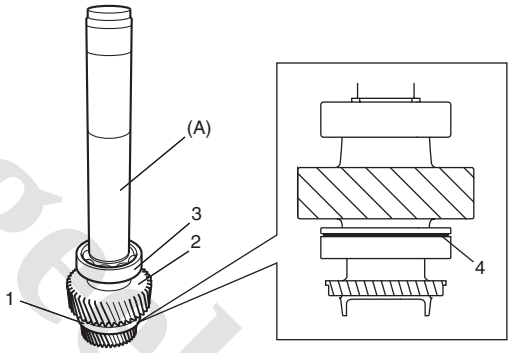

I5JB0A520082-01

3) Install new output shaft rear snap ring.

## Output Shaft Inspection

S5JB0A5206035

Check clearance “a” between ring (2) and output shaft (1), each chamfered teeth of gear, ring and sleeve, then determine parts replacement.

**Clearance between synchronizer ring and output shaft**
**Standard “a”: 1.0 - 1.4 mm (0.040 - 0.055 in.)**
**Service limit “a”: 0.5 mm (0.020 in.)**

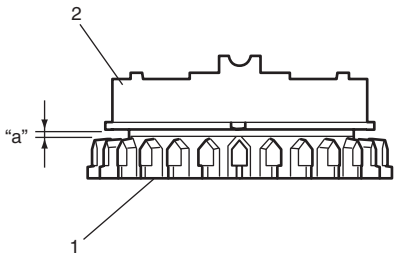

I5JB0A520083-01

www.cargeek.ir

www.CarGeek.ir


## Manual Transmission Front Case Disassembly and Assembly

S5JB0A5206022

### Disassembly

Remove pump seal (1) and oil seal (2) from front case using special tools.

**Special tool**
**(A): 09941–64511**
**(B): 09930–30104**

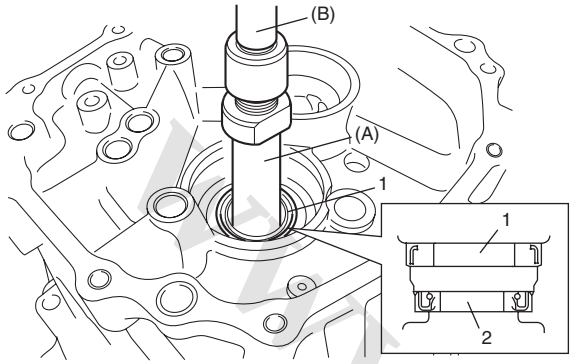


I5JB0A520084-02

### Assembly

1) Set new oil seal to front case with its spring side facing rear case side.
2) Install oil seal until it becomes flush with case surface using special tool and hammer and apply grease to oil seal lip.

   **Special tool**
   **(A): 09940–51710**

   **: Grease 99000–25010 (SUZUKI Super Grease A)**

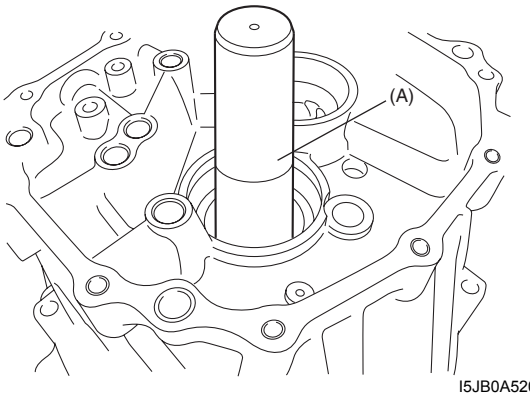


I5JB0A520085-02

3) Install pump seal to front case using special tool and hammer.

   **Special tool**
   **(A): 09913–75810**

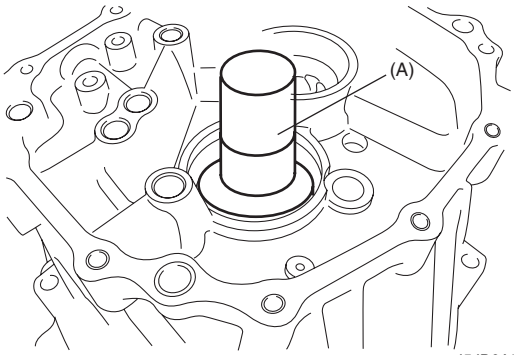


I5JB0A520088-01

## Manual Transmission Adapter Case Disassembly and Assembly

S5JB0A5206023

### Disassembly

Remove oil seal (1) from adapter case using special tool.

**Special tool**
**(A): 09913–50121**

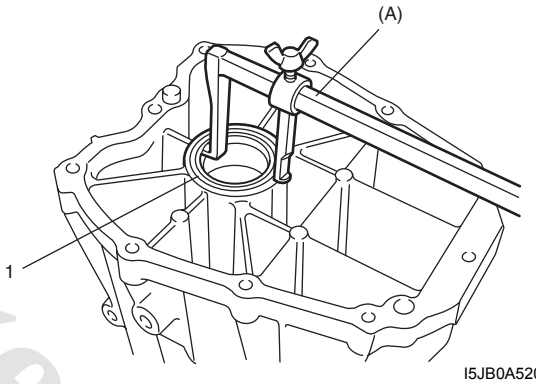


I5JB0A520086-01

### Assembly

1) Set new oil seal to adapter case with its spring side facing rear case side.
2) Install oil seal until it becomes flush with case surface using special tool and hammer and apply grease to oil seal lip.

**Special tool**
**(A): 09913–85210**

**: Grease 99000–25010 (SUZUKI Super Grease A)**

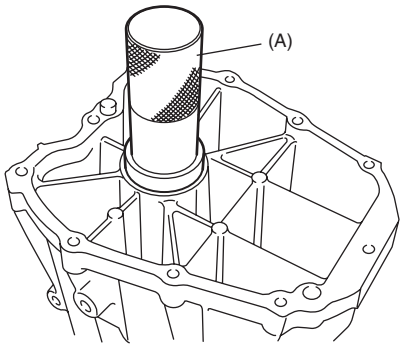


I5JB0A520087-01

www.cargeek.ir

 www.CarGeek.ir

# Specifications

## Tightening Torque Specifications

S5JB0A5207001

| Fastening part | Tightening torque | | | Note |
|---|---|---|---|---|
| | N·m | kgf-m | lb-ft | |
| Transmission oil drain plug | 23 | 2.3 | 17.0 | ☞ |
| Oil filler plug | 23 | 2.3 | 17.0 | ☞ |
| Control lever locating bolt | 9 | 0.9 | 6.5 | ☞ |
| Case cover bolt | 10 | 1.0 | 7.5 | ☞ |
| Control lever boot cover bolt | 12 | 1.2 | 9.0 | ☞ |
| Back up light switch | 23 | 2.3 | 17.0 | ☞ |
| Plate bolt | 23 | 2.3 | 17.0 | ☞ |
| Control shaft joint nut | 18 | 1.8 | 13.0 | ☞ / ☞ |
| Gear shift lever front case bolt | 23 | 2.3 | 17.0 | ☞ |
| Engine rear mounting No.1 bolt | 55 | 5.5 | 40.0 | ☞ |
| Engine rear mounting member bolt | 55 | 5.5 | 40.0 | ☞ / ☞ |
| Engine rear mounting No.2 bolt | 55 | 5.5 | 40.0 | ☞ / ☞ |
| Transmission to engine bolt and nut | 85 | 8.5 | 61.5 | ☞ |
| Clutch housing lower plate bolt | 11 | 1.1 | 8.0 | ☞ |
| Low gear shift inverse lever bolt | 23 | 2.3 | 17.0 | ☞ |
| Transmission case bolt | 23 | 2.3 | 17.0 | ☞ |
| Reverse shaft bolt | 23 | 2.3 | 17.0 | ☞ |
| Gear shift locating bolt | 23 | 2.3 | 17.0 | ☞ |
| Adapter case bolt | 23 | 2.3 | 17.0 | ☞ |
| Input shaft 5th hub nut | 210 | 21.0 | 152.0 | ☞ |
| Countershaft front bearing nut | 210 | 21.0 | 152.0 | ☞ |

**NOTE**

**The specified tightening torque is also described in the following.**
**“Manual Transmission Assembly Components: ”**
**“Gear Shift Control Lever Rear Case Assembly Components: ”**
**“Gear Shift Lever Front Case Assembly Components: ”**
**“Gear Shift Shaft and Fork Components: ”**
**“Input Shaft Assembly, Output Shaft Assembly and Countershaft Assembly Components: ”**

**Reference:**
For the tightening torque of fastener not specified in this section, refer to “Fastener Information:  in Section 0A”.

www.cargeek.ir

# Special Tools and Equipment

## Recommended Service Material

S5JB0A5208001

| Material | SUZUKI recommended product or Specification | | Note |
|---|---|---|---|
| Grease | SUZUKI Super Grease A | P/No.: 99000–25010 | ☞ / ☞ / ☞ / ☞ / ☞ |
| Sealant | SUZUKI Bond No.1217G | P/No.: 99000–31260 | ☞ / ☞ / ☞ / ☞ / ☞ |
| Thread lock cement | Thread Lock Cement Super 1322 | P/No.: 99000–32110 | ☞ / ☞ |

**NOTE**

**Required service material is also described in the following.**
**“Manual Transmission Assembly Components: ”**
**“Gear Shift Control Lever Rear Case Assembly Components: ”**
**“Gear Shift Lever Front Case Assembly Components: ”**
**“Gear Shift Shaft and Fork Components: ”**
**“Input Shaft Assembly, Output Shaft Assembly and Countershaft Assembly Components: ”**

## Special Tool

S5JB0A5208002

| | |
|---|---|
| 09900–06106<br>Snap ring pliers (closing type)<br>☞ / ☞ 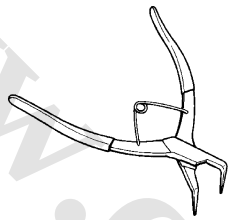 | 09913–50121<br>Oil seal remover<br>☞ 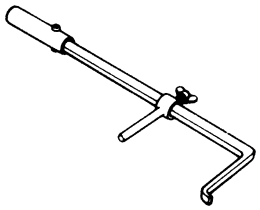 |
| 09913–75810<br>Bearing installer<br>☞ 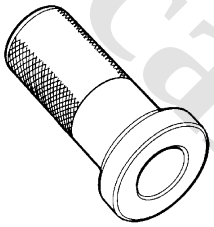 | 09913–80113<br>Bearing installer<br>☞ |
| 09913–84510<br>Bearing installer<br>☞ / ☞ / ☞ / ☞ / ☞ 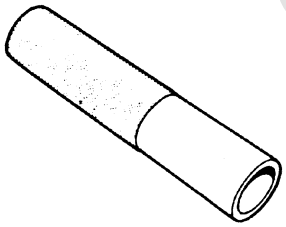 | 09913–85210<br>Bearing installer<br>☞ 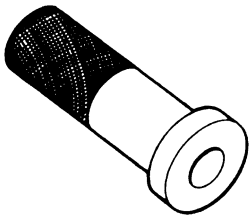 |
| 09923–46020<br>Joint pipe<br>☞ 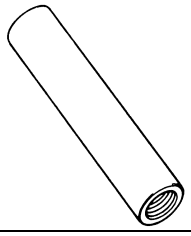 | 09925–78210<br>Spring pin remover (6 mm)<br>☞ / ☞ 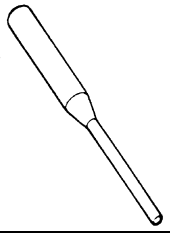 |
| 09930–30104<br>Sliding shaft<br>☞ 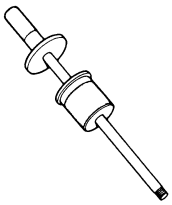 | 09940–51710<br>Bearing installer<br>☞ / ☞ / ☞ 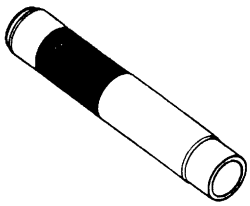 |

www.cargeek.ir

 www.CarGeek.ir

| | |
|---|---|
| 09941–64511<br>Bearing and oil seal remover<br>(30 mm Min.)<br>☞ 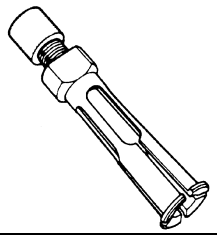 | |

www.cargeek.ir

www.cargeek.ir

www.CarGeek.ir


# Clutch

## General Description

### Clutch (Hydraulic Type) Construction

S5JB0A5301001

The clutch is a diaphragm-spring clutch of a dry single disc type. The diaphragm spring is of a tapering-finger type, which is a solid ring in the outer diameter part, with a series of tapered fingers pointing inward.
The disc, carrying torsional coil springs, is positioned on the transmission input shaft with an involute spline fit.
The clutch cover is secured to the flywheel, and carries the diaphragm spring in such a way that the peripheral edge part of the spring pushes on the pressure plate against the flywheel (with the disc in between), when the clutch release bearing (incorporated in clutch operating cylinder) is held back. This is the engaged condition of the clutch.
Depressing the clutch pedal causes the release bearing (incorporated in clutch operating cylinder) to advance and pushes on the tips of the tapered fingers of the diaphragm spring. When this happens, the diaphragm spring pulls the pressure plate away from the flywheel, thereby interrupting the flow of drive from flywheel through clutch disc to transmission input shaft.
Clutch fluid is supplied from brake fluid reservoir.
Clutch fluid level can be checked by brake fluid level of brake fluid reservoir.

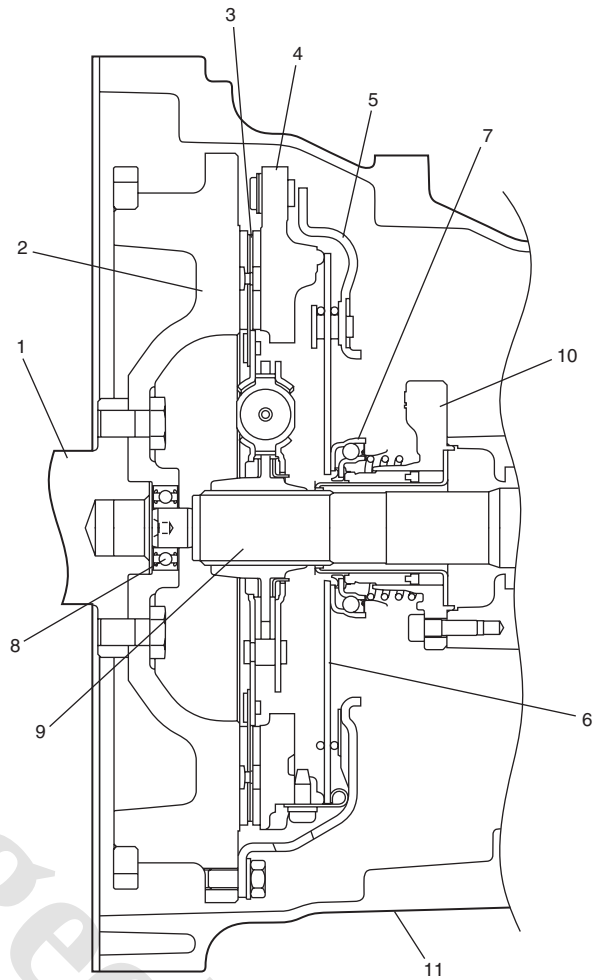


I5JB0A530001-01

| | |
|---|---|
| 1. Crankshaft | 7. Release bearing |
| 2. Flywheel | 8. Input shaft bearing |
| 3. Clutch disc | 9. Input shaft |
| 4. Pressure plate | 10. Operating cylinder |
| 5. Clutch cover | 11. Clutch housing |
| 6. Diaphragm spring | |

www.cargeek.ir

www.CarGeek.ir

# Component Location

## Clutch Fluid Pipe and Hose Location

S5JB0A5303001

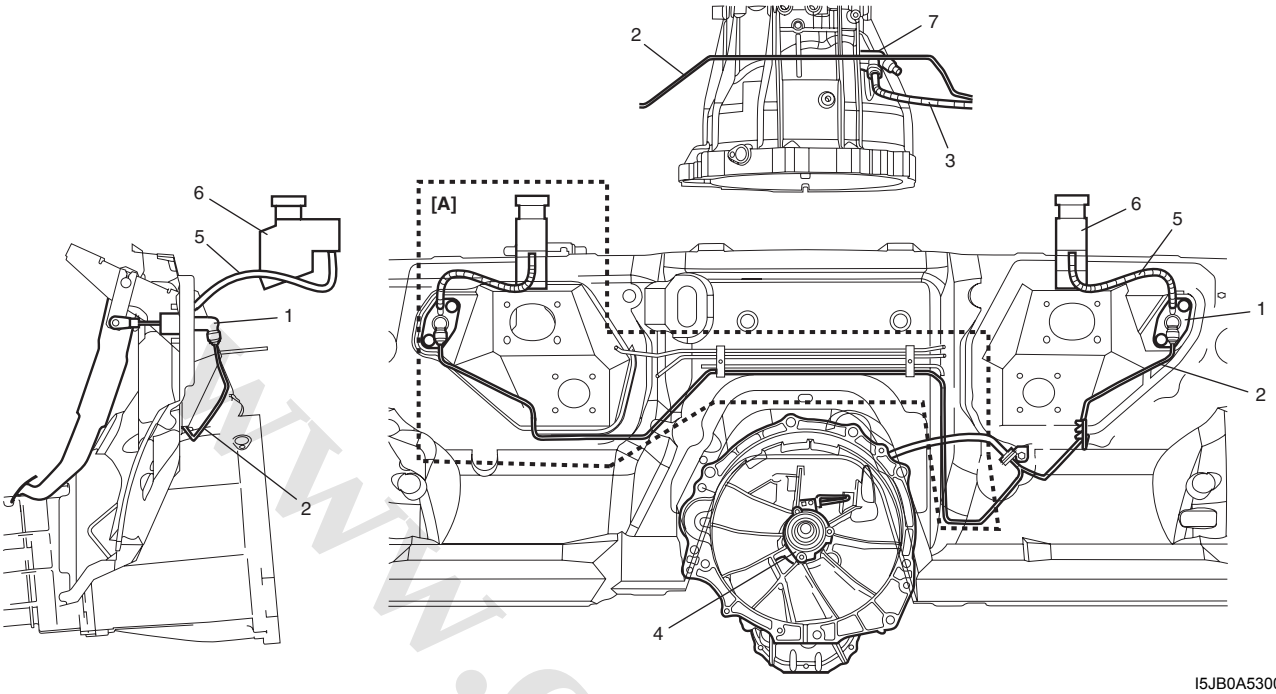


I5JB0A530002-02

| | | |
|---|---|---|
| [A]: Right-hand steering vehicle | 3. Clutch fluid hose | 6. Brake master cylinder reservoir |
| 1. Clutch master cylinder | 4. Clutch operating cylinder assembly | 7. Clutch fluid pipe joint |
| 2. Clutch fluid pipe | 5. Clutch reservoir hose | |

# Diagnostic Information and Procedures

## Clutch (Hydraulic Type) Symptom Diagnosis

S5JB0A5304001

| Condition | Possible cause | Correction / Reference Item |
|---|---|---|
| ***Slipping*** | Improper clutch pedal free travel | *Bleed air or replace master cylinder.* |
| | Worn or oily clutch disc facing | *Replace disc.* |
| | Warped disc, pressure plate or flywheel surface | *Replace disc, clutch cover or flywheel.* |
| | Weakened diaphragm spring | *Replace clutch cover.* |
| | Master cylinder piston or seal cup not returning | *Repair master cylinder.* |
| ***Dragging clutch*** | Improper clutch pedal free travel | *Bleed air or replace master cylinder.* |
| | Weakened diaphragm spring, or worn spring tip | *Replace clutch cover.* |
| | Rusted input shaft splines | *Lubricate.* |
| | Damaged or worn splines of transmission input shaft | *Replace input shaft.* |
| | Excessively wobbly clutch disc | *Replace disc.* |
| | Clutch facings broken or dirty with oil | *Replace disc.* |
| | Fluid leakage | *Repair or replace.* |

www.cargeek.ir

www.CarGeek.ir


| Condition | Possible cause | Correction / Reference Item |
|---|---|---|
| ***Clutch vibration*** | Glazed (glass-like) clutch facings | *Repair or replace disc.* |
| | Clutch facings dirty with oil | *Replace disc.* |
| | Release bearing slides unsmoothly | *Replace clutch operating cylinder assembly.* |
| | Wobbly clutch disc, or poor facing contact | *Replace disc.* |
| | Weakened torsion springs in clutch disc | *Replace disc.* |
| | Clutch disc rivets loose | *Replace disc.* |
| | Distorted pressure plate or flywheel surface | *Replace clutch cover or flywheel.* |
| | Weakened or loosened engine mounting bolt or nut | *Retighten or replace mounting.* |
| ***Noisy clutch*** | Worn or broken release bearing | *Replace clutch operating cylinder assembly.* |
| | Input shaft front bearing worn down | *Replace input shaft bearing.* |
| | Excessive rattle of clutch disc hub | *Replace disc.* |
| | Cracked clutch disc | *Replace disc.* |
| | Pressure plate and diaphragm spring rattling | *Replace clutch cover.* |
| ***Grabbing clutch*** | Clutch disc facings soaked with oil | *Replace disc.* |
| | Clutch disc facings excessively worn | *Replace disc.* |
| | Rivet heads showing out of facing | *Replace disc.* |
| | Weakened torsion springs | *Replace disc.* |

## Clutch Pedal Height Inspection

S5JB0A5304002

Measure clutch pedal height “a” from brake pedal (2). If pedal height is excessive low or high, check installation position of clutch position switch, clutch fluid leakage, bending of clutch pedal arm and bending of push rod of clutch master cylinder (3). If any abnormality is found, adjust or replace it with a new one.

**Clutch pedal height**

**“a”: Approx. 20 mm (0.79 in.)**

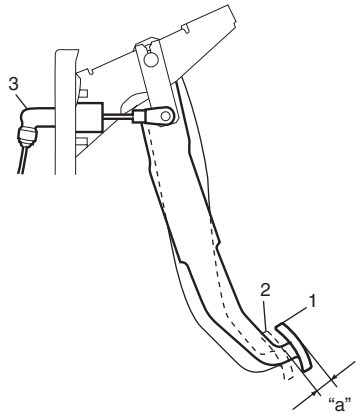


I5JB0A530003-01

1. Clutch pedal

## Clutch Pedal Free Travel Check

S5JB0A5304003

Depress clutch pedal (1), stop the moment clutch resistance is felt and measure distance (clutch pedal free travel). Free travel should be within the following specification. If free travel is out of specification, check installation position of clutch pedal position switch, clutch fluid leakage, bending of clutch pedal arm and bending of push rod of clutch master cylinder. If any abnormality is found, adjust or replace it with a new one.

**Clutch pedal free travel**

**“a”: 0 – 10 mm (0 – 0.4 in.)**

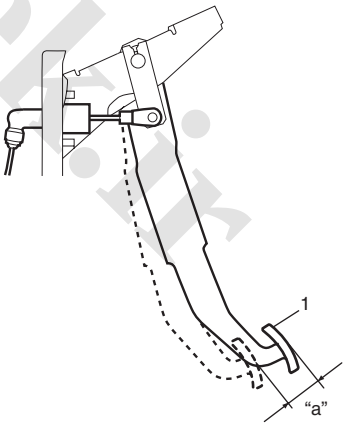


I5JB0A530004-01

## Clutch Fluid Inspection

S5JB0A5304004

Refer to “Brake Fluid Level Check: in Section 4A”.

www.cargeek.ir

www.CarGeek.ir

# Repair Instructions

## Clutch Pedal Position (CPP) Switch Removal and Installation

S5JB0A5306001

### Removal

1) Disconnect connector of CPP switch (1) with ignition switch OFF.
2) Remove CPP switch (1) from pedal bracket.

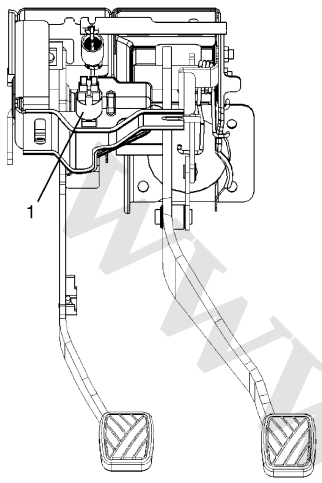


I5JB0A530005-02

### Installation

1) Instal CPP switch to pedal bracket.
2) Adjust switch position referring to “Clutch Pedal Position (CPP) Switch Inspection and Adjustment: ”.
3) Connect connector to CPP switch securely.

## Clutch Pedal Position (CPP) Switch Inspection and Adjustment

S5JB0A5306002

### Inspection

Check for resistance between terminals under each condition below. If check result is not satisfactory, replace.

**CPP switch resistance**
**When switch shaft is pushed (1): Continuity**
**When switch shaft is free (2): No continuity**

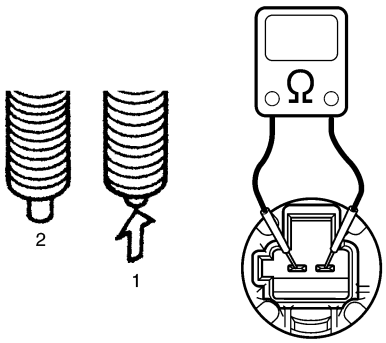


I5JB0A530006-01

### Adjustment

With clutch pedal (1) released, adjust switch (2) position so that clearance between end of thread and clutch pedal arm is within specification.

**Clearance between end of thread and clutch pedal arm**
**“a”: 0.5 – 1.5 mm (0.02 – 0.06 in.)**

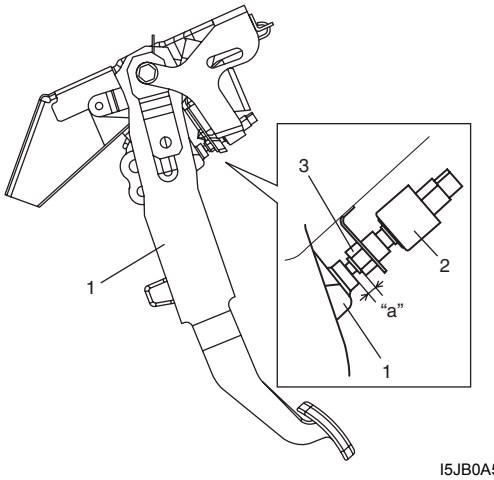


I5JB0A530007-02

## Clutch Fluid Pipe and Hose Removal and Installation

S5JB0A5306003

**⚠ CAUTION**

**Do not allow fluid to get on painted surface. It may cause painted surface damage.**

### Removal

1) Remove dust and dirt from each joint of hose and pipe to be disconnected and clean around reservoir cap of brake master cylinder.
2) Take out fluid with syringe or such.
3) Remove clamp (1) of clutch master cylinder (2) and disconnect fluid pipe (3).

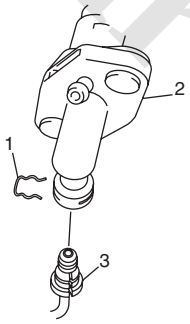


I5JB0A530008-01

www.cargeek.ir

www.CarGeek.ir


4) Disconnect fluid pipe (1) from hose (2).

**NOTE**

**To disconnect pipe (1) from hose (2), separate them by using flare nut wrench (4) and spanner (3) so as not to kink them.**

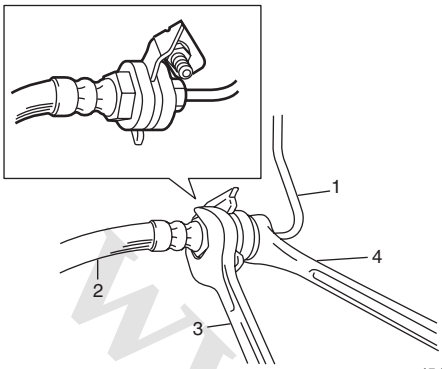

I5JB0A530009-03

5) Pull clamp (1) of fluid pipe joint (2) and disconnect fluid hose (3).

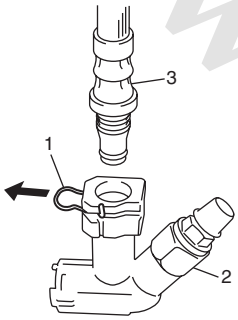

I5JB0A530010-02

**Installation**

Reverse removal sequence noting the following points.

- Tighten flare nut (3) and hose bracket nut (4) to specified torque.

**Tightening torque**

**Clutch fluid pipe flare nut (a): 16 N·m (1.6 kgf-m, 11.5 lb-ft)**

**Clutch fluid hose bracket nut (b): 10 N·m (1.0 kgf-m, 7.5 lb-ft)**

- Do not allow pipe (1) and hose (2) to contact hard against vehicle or other parts.
- Install each clamp securely.
- After installation, check clutch pedal free travel and bleed air from system.
- Check fluid leakage.
- Add fluid close to MAX level of reservoir.

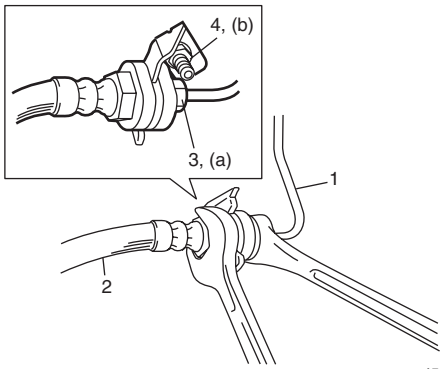

I5JB0A530011-03

## Clutch Fluid Pipe and Hose Inspection

S5JB0A5306004

Check pipe (1) and hose (2) for dent, kink, crack, dirt and dust. Replace if check result is not satisfactory.

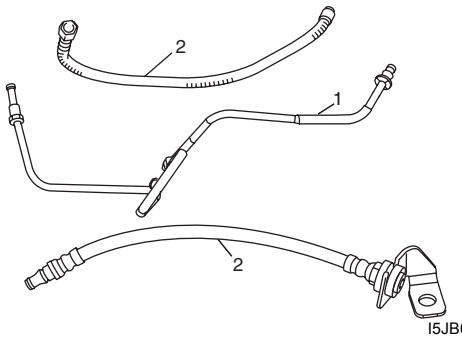

I5JB0A530012-03

## Clutch Master Cylinder Removal and Installation

S5JB0A5306005

**⚠ CAUTION**

- **Do not allow fluid to get on painted surfaces. It may cause painted surface damage.**
- **Do not disassemble clutch master cylinder.**

**Removal**

1) Clean around reservoir cap of brake master cylinder and take out fluid with syringe or such.
2) Detach main fuse box.
3) Disconnect fluid pipe (2) and reservoir hose (4) from master cylinder assembly (1).
4) Remove clip (6) and push rod clevis pin (5).
5) Remove master cylinder attaching nuts (3).
6) Remove master cylinder assembly (1) and gasket.

www.cargeek.ir

www.CarGeek.ir

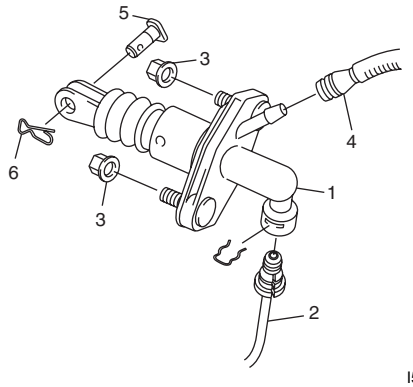

I5JB0A530013-01

**Installation**

Reverse removal procedure for installation noting the following.

- Apply grease to push rod clevis pin (1).

**"A": Grease 99000–25100 (SUZUKI Silicone Grease)**

- Tighten master cylinder attaching nuts (2) to specified torque.

  **Tightening torque**
  **Clutch master cylinder attaching nut (a): 23 N·m ( 2.3 kgf-m, 17.0 lb-ft)**

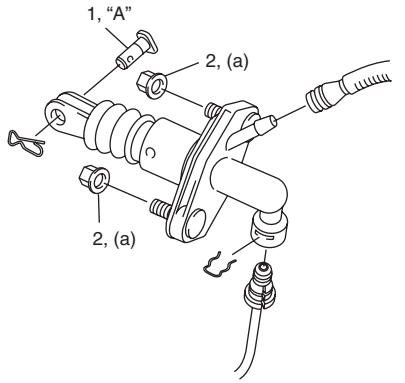

I5JB0A530014-01

- Fill reservoir with specified brake fluid and check fluid leakage.
- After installation, bleed air from clutch system and check clutch pedal free travel. Refer to "Air Bleeding of Brake System: in Section 4A" for air bleeding procedure.

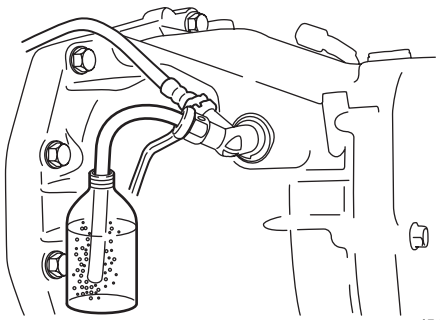
I5JB0A530015-03

## Clutch Master Cylinder Inspection

S5JB0A5306008

- Check master cylinder (1) for damage and fluid leakage, boot for damage and deterioration, gasket for damage and deterioration.
- Check for push rod clevis distance "a" and clevis pin hole diameter "b" as shown.

If any malfunction is found, replace master cylinder.

**Push rod clevis distance "a":**
**106.1 – 107.1 mm (4.18 – 4.22 in.)**

**Clevis pin hole diameter "b":**
**10.05 – 10.15 mm (0.396 – 0.399 in.)**

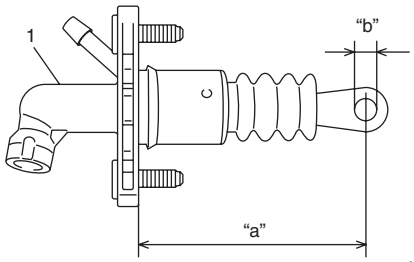

I5JB0A530016-01

## Clutch Operating Cylinder Assembly Removal and Installation

S5JB0A5306009

**⚠ CAUTION**

- **Do not allow fluid to get on painted surfaces. It may cause painted surface damage.**
- **Do not disassemble clutch operating cylinder assembly.**

**Removal**

1) Clean around reservoir cap of brake master cylinder and take out fluid with syringe or such.
2) Dismount transmission assembly referring to "Manual Transmission Assembly Dismounting and Remounting: in Section 5B".
3) Loosen clutch fluid pipe flare nut (1) of clutch operating cylinder assembly (2).
4) Remove clutch pipe joint sleeve (3) from transmission front case and then remove clutch fluid pipe (4).
5) Remove clutch operating cylinder assembly from transmission front case.

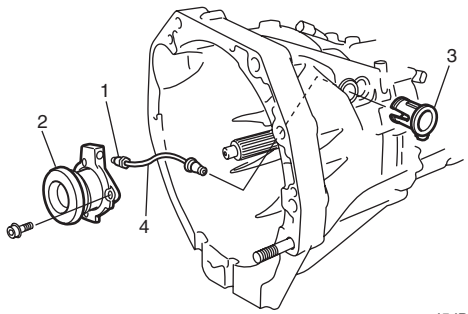

I5JB0A530017-01

www.cargeek.ir

### Installation

1) Install clutch operating cylinder assembly (2) to transmission front case. Tighten mounting bolts to specified torque.

**Tightening torque**
**Clutch operating cylinder assembly mounting bolt (a): 10 N·m (1.0 kgf-m, 7.5 lb-ft)**

2) Connect clutch fluid pipe (4) to clutch operating cylinder assembly temporarily.
3) Install clutch pipe joint sleeve (3) to transmission front case securely and then tighten clutch fluid pipe flare nut (1) to specified torque.

**Tightening torque**
**Clutch fluid pipe flare nut (b): 16 N·m (1.6 kgf-m, 11.5 lb-ft)**

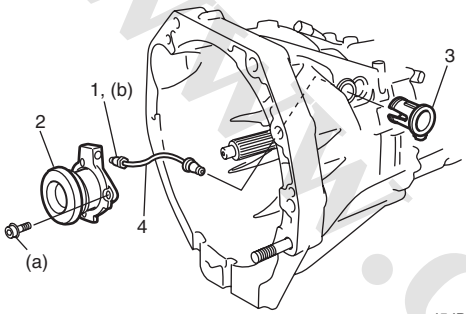

I5JB0A530018-01

4) Remount transmission assembly referring to "Manual Transmission Assembly Dismounting and Remounting: in Section 5B".
5) Fill reservoir with specified brake fluid and check for fluid leakage.
6) Bleed air from system and check clutch pedal free travel. Refer to "Air Bleeding of Brake System: in Section 4A" for air bleeding procedure.

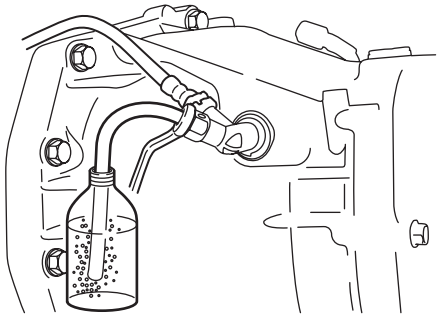
I5JB0A530015-03

### Clutch Operating Cylinder Assembly Inspection

Check clutch fluid leakage, spring for damage and bearing for smooth rotation. If malfunction is found, replace clutch operating cylinder assembly.

## Clutch Cover, Clutch Disc and Flywheel Components

S5JB0A5306010

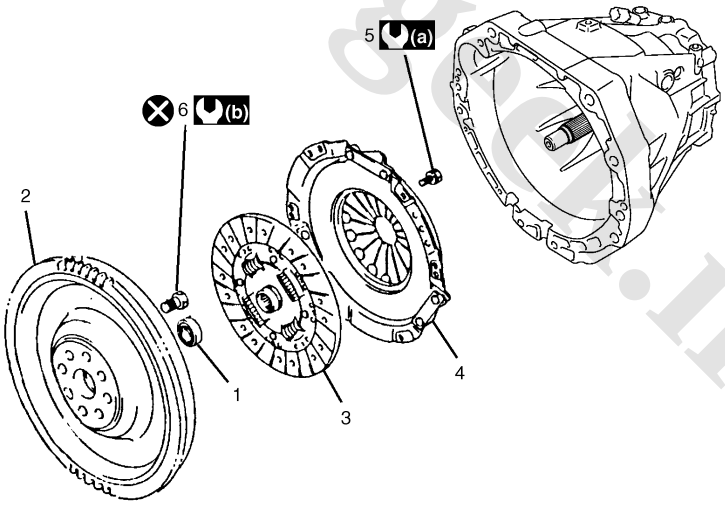

I5JB0A530022-01

| | | |
|---|---|---|
| 1. Input shaft bearing | 4. Clutch cover | (a) : 23 N·m (2.3 kgf-m, 17.0 lb-ft) |
| 2. Flywheel | 5. Clutch cover bolt | (b) : 70 N·m (7.0 kgf-m, 50.5 lb-ft) (for M16 engine model)<br>68.5 N·m (6.85 kgf-m, 49.5 lb-ft) (for J20 engine model) |
| 3. Clutch disc | 6. Flywheel bolt | ⊗ : Do not reuse. |

www.cargeek.ir

www.CarGeek.ir

## Clutch Cover, Clutch Disc and Flywheel Removal and Installation

S5JB0A5306012

### Removal

1) Dismount transmission assembly referring to “Manual Transmission Assembly Dismounting and Remounting: in Section 5B”.
2) Hold flywheel stationary with special tool and remove clutch cover bolts (1), clutch cover (2) and clutch disc.

**Special tool**
**(A): 09924–17811**

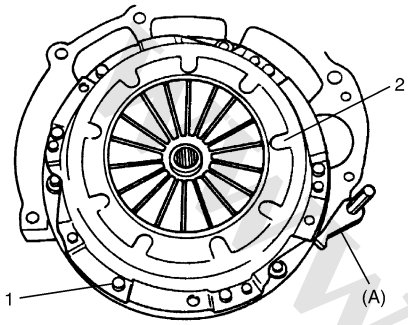


IYSQ01530019-01

3) Pull out input shaft bearing (1) by using special tools.

**Special tool**
**(A): 09921–26020**
**(B): 09930–30104**

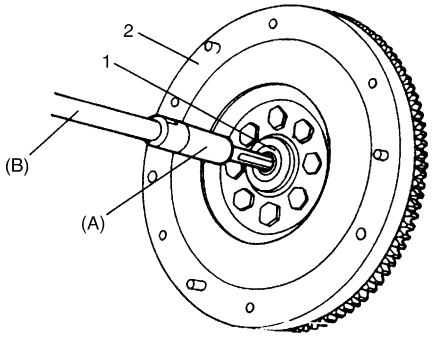


I2RH01530023-01

4) Remove flywheel from crankshaft.

### Installation

**NOTE**

**Before installation, make sure that flywheel surface and pressure plate surface have been cleaned and dried thoroughly.**

1) Install flywheel (1) to crankshaft and tighten new bolts (2) to specification.

**Special tool**
**(A): 09924–17811**

**Tightening torque**
**Flywheel bolt (for M16 engine model) (a): 70 N·m (7.0 kgf-m, 50.5 lb-ft)**
**Flywheel bolt (for J20 engine model) (a): 68.5 N·m (6.9 kgf-m, 49.5 lb-ft)**

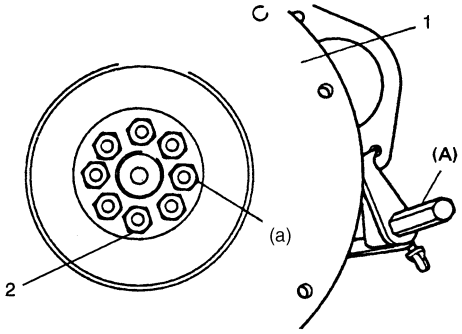


I5JB0A530020-01

2) Using special tool, install input shaft bearing to flywheel.

**Special tool**
**(B): 09925–98210**

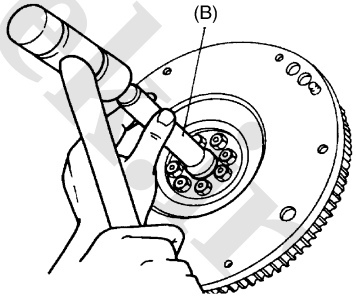


IYSQ01530022-01

www.cargeek.ir

www.CarGeek.ir


3) Aligning clutch disc to flywheel center by using special tool, install clutch cover (1) and bolts (2). Then tighten bolts to specification.

**NOTE**

- **While tightening clutch cover bolts, compress clutch disc with special tool by hand so that disc centered.**
- **Tighten cover bolts little by little evenly in diagonal order.**

**Special tool**
**(A): 09924–17811**
**(C): 09923–36320**

**Tightening torque**
**Clutch cover bolt (b): 23 N·m (2.3 kgf-m, 17.0 lb-ft)**

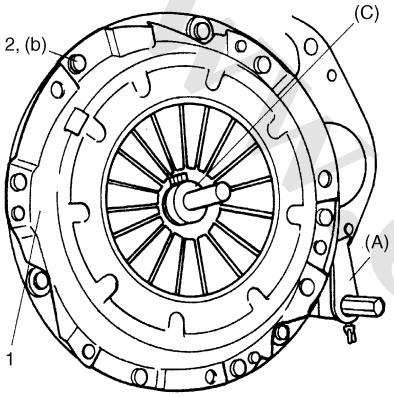

IYSQ01530023-01

4) Slightly apply grease to input shaft (1).

**"A": Grease 99000–25210 (SUZUKI Super Grease I)**

5) Join transmission assembly with engine. Refer to "Manual Transmission Assembly Dismounting and Remounting: in Section 5B".

**NOTE**

**Turn crankshaft with wrench from front while inserting transmission input shaft (1) to clutch disc until splines mesh.**

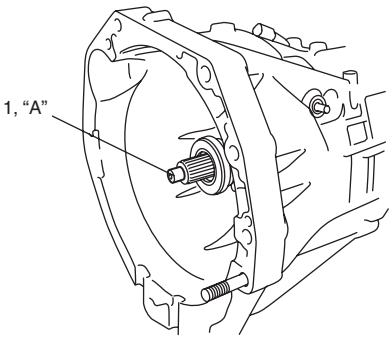

I5JB0A530021-01

## Clutch Cover, Clutch Disc and Flywheel Inspection

S5JB0A5306013

### Input Shaft Bearing

Check bearing for smooth rotation and replace it if abnormality is found.

### Clutch Disc

Measure depth of rivet head depression, i.e. distance between rivet head and facing surface. If depression is found to have reached service limit at any of holes, replace disc assembly.

**Rivet head depth**
**Standard: 1.5 mm (0.06 in.)**
**Service limit: 0.5 mm (0.02 in.)**

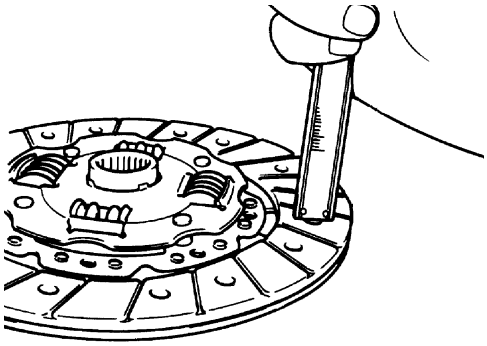
IYSQ01530025-01

### Clutch Cover

- Check diaphragm spring for abnormal wear or damage.
- Inspect pressure plate for wear or heat spots.

If abnormality is found, replace it as assembly. Do not disassemble it into diaphragm and pressure plate.

### Flywheel

Check surface contacting clutch disc for abnormal wear or heat spots. Replace or repair as required.

www.cargeek.ir

www.CarGeek.ir

# Specifications

## Tightening Torque Specifications

S5JB0A5307001

| Fastening part | Tightening torque | | | Note |
|---|---|---|---|---|
| | N·m | kgf-m | lb-ft | |
| Clutch fluid pipe flare nut | 16 | 1.6 | 11.5 | ☞ / ☞ |
| Clutch fluid hose bracket nut | 10 | 1.0 | 7.5 | ☞ |
| Clutch master cylinder attaching nut | 23 | 2.3 | 17.0 | ☞ |
| Clutch operating cylinder assembly mounting bolt | 10 | 1.0 | 7.5 | ☞ |
| Flywheel bolt (for M16 engine model) | 70 | 7.0 | 50.5 | ☞ |
| Flywheel bolt (for J20 engine model) | 68.5 | 6.9 | 49.5 | ☞ |
| Clutch cover bolt | 23 | 2.3 | 17.0 | ☞ |

**NOTE**

**The specified tightening torque is also described in the following.**
**“Clutch Cover, Clutch Disc and Flywheel Components: ”**

**Reference:**
For the tightening torque of fastener not specified in this section, refer to “Fastener Information: in Section 0A”.

# Special Tools and Equipment

## Recommended Service Material

S5JB0A5308001

| Material | SUZUKI recommended product or Specification | | Note |
|---|---|---|---|
| Grease | SUZUKI Silicone Grease | P/No.: 99000–25100 | ☞ |
| | SUZUKI Super Grease I | P/No.: 99000–25210 | ☞ |

## Special Tool

S5JB0A5308002

| | |
|---|---|
| 09921–26020<br>Bearing remover<br>☞ 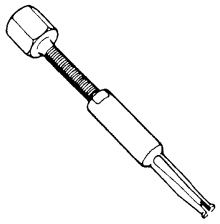 | 09923–36320<br>Clutch center guide (15 mm)<br>☞ 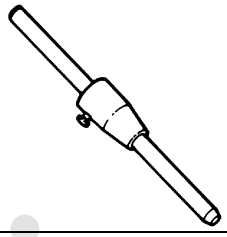 |
| 09924–17811<br>Flywheel holder<br>☞ / ☞ / ☞ 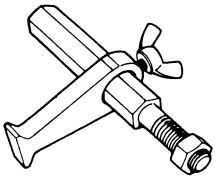 | 09925–98210<br>Input shaft bearing installer<br>☞ 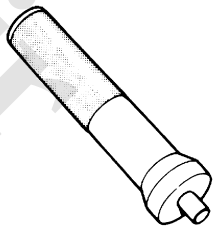 |
| 09930–30104<br>Sliding shaft<br>☞ 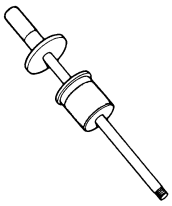 | |

www.cargeek.ir

www.CarGeek.ir


# Section 6

# Steering

## CONTENTS


**Precautions ..... 6-1**
**Precautions ..... 6-1**
Precautions for Steering ..... 6-1

**Steering General Diagnosis ..... 6A-1**
**Diagnostic Information and Procedures ..... 6A-1**
Steering Symptom Diagnosis ..... 6A-1

**Steering Wheel and Column ..... 6B-1**
**Precautions ..... 6B-1**
Service Precautions of Air Bag Steering Wheel and Column ..... 6B-1
Handling and Storage of Air Bag Steering Wheel and Column ..... 6B-1
Disposal of Air Bag Steering Wheel and Column ..... 6B-1
**General Description ..... 6B-1**
Steering Wheel and Column Construction ..... 6B-1
**Diagnostic Information and Procedures ..... 6B-3**
Air Bag Steering Wheel and Column Symptom Diagnosis ..... 6B-3
Air Bag Steering Wheel and Column Inspection and Repair Required after Accident ..... 6B-3
Diagnosis and Servicing of Air Bag Steering Wheel and Column ..... 6B-3
**Repair Instructions ..... 6B-3**
Checking Steering Column for Accident Damage ..... 6B-3
Steering Wheel Removal and Installation ..... 6B-4
Contact Coil Cable Assembly Removal and Installation ..... 6B-5
Contact Coil Cable Assembly Inspection ..... 6B-7
Centering Contact Coil Cable Assembly ..... 6B-7
Steering Column Assembly Removal and Installation ..... 6B-7
Steering Column Assembly Inspection ..... 6B-10
Ignition Switch Cylinder Assembly Removal and Installation (Without Keyless Start System) ..... 6B-10
Steering Lock Assembly (Ignition Switch) Removal and Installation ..... 6B-11
Adjustable Steering Column Release Lever Inspection ..... 6B-11
Steering Upper Shaft Assembly Removal and Installation ..... 6B-11
Steering Upper Shaft Assembly Inspection ..... 6B-12
Steering Lower Shaft Assembly Removal and Installation ..... 6B-13
**Specifications ..... 6B-14**
Tightening Torque Specifications ..... 6B-14
**Special Tools and Equipment ..... 6B-14**
Special Tool ..... 6B-14

**Power Assisted Steering System ..... 6C-1**
**Precautions ..... 6C-1**
P/S System Note ..... 6C-1
**General Description ..... 6C-1**
P/S System Construction ..... 6C-1
Steering Gear Case Construction ..... 6C-2
P/S Pump Construction ..... 6C-2
**Schematic and Routing Diagram ..... 6C-3**
P/S Fluid Flow Diagram ..... 6C-3
**Diagnostic Information and Procedures ..... 6C-3**
P/S System Symptom Diagnosis ..... 6C-3
Steering Wheel Check ..... 6C-4
Steering Force Check ..... 6C-5
Steering Wheel Recovery Check ..... 6C-5
Idle Up System Check ..... 6C-5
Hydraulic Pressure in P/S Circuit Check ..... 6C-5
**Repair Instructions ..... 6C-7**
P/S Fluid Change ..... 6C-7
P/S Fluid Level Check ..... 6C-7
P/S Fluid Leakage Check ..... 6C-8
P/S System Air Bleeding Procedure ..... 6C-8
P/S Pump and A/C Compressor (If Equipped) Drive Belt Inspection and Adjustment for M16 Engine Model ..... 6C-9
P/S Pump and A/C Compressor (If Equipped) Drive Belt Inspection and Adjustment for J20 Engine Model ..... 6C-9
P/S Pump and A/C Compressor (If Equipped) Drive Belt Removal and Installation for M16 Engine Model ..... 6C-9
P/S Pump and A/C Compressor (If Equipped) Drive Belt Removal and Installation for J20 Engine Model ..... 6C-10
Steering Rack Boot Check ..... 6C-10
Tie-Rod End Boot Check ..... 6C-10
Tie-Rod End Removal and Installation ..... 6C-10
Tie-Rod End Ball Joint Inspection ..... 6C-11
P/S Gear Case Assembly Components ..... 6C-12
P/S Gear Case Assembly Removal and Installation ..... 6C-13




www.cargeek.ir

www.CarGeek.ir

Steering Gear Case Mount Bushing Removal and Installation....6C-14
Steering Gear Case Mount Bushing Inspection....6C-14
Rack Boot / Tie-Rod Removal and Installation....6C-15
P/S Hose / Pipe Components....6C-16
P/S Pump Removal and Installation for M16 Engine Model....6C-18
P/S Pump Removal and Installation for J20 Engine Model....6C-18
P/S Pump Components for M16 Engine Model....6C-19
P/S Pump Assembly Components for J20 Engine Model....6C-20
P/S Pump Disassembly and Assembly for M16 Engine Model....6C-20
P/S Pump Inspection for M16 Engine Model....6C-22
P/S Pump Inspection for J20 Engine Model....6C-23
**Specifications....6C-23**
Tightening Torque Specifications....6C-23
**Special Tools and Equipment....6C-24**
Recommended Service Material....6C-24
Special Tool....6C-24

www.cargeek.ir

www.cargeek.ir

www.CarGeek.ir


# Precautions

## Precautions

### Precautions for Steering

S5JB0A6000001

**Air Bag Warning**
Refer to “Air Bag Warning: in Section 00”.

**Fastener Caution**
Refer to “Fastener Caution: in Section 00”.

**Service Precautions of Air Bag Steering Wheel and Column**
Refer to “Service Precautions of Air Bag Steering Wheel and Column: in Section 6B”.

**Handling and Storage of Air Bag Steering Wheel and Column**
Refer to “Handling and Storage of Air Bag Steering Wheel and Column: in Section 6B”.

**Disposal of Air Bag Steering Wheel and Column**
Refer to “Disposal of Air Bag Steering Wheel and Column: in Section 6B”.

www.cargeek.ir

www.cargeek.ir

 www.CarGeek.ir

# Steering General Diagnosis

## Diagnostic Information and Procedures

### Steering Symptom Diagnosis

S5JB0A6104001

Since the problems in steering involve several systems, they must all be considered when diagnosing a complaint. To avoid using the wrong symptom, always road test the vehicle first.
Proceed with the following preliminary inspections and correct any defects which are found.

1) Inspect tires for proper pressure and uneven wear.
2) Raise vehicle on a hoist and inspect steering system for loose or damaged parts.
3) Spin front wheels. Inspect for out-of-round tires, out-of-balance tires, bent rims, loosen and/or rough wheel bearings.

| Condition | Possible cause | Correction / Reference Item |
|---|---|---|
| ***Hard steering*** | Bind in tie rod end ball studs or lower ball joints | *Replace tie rod end or front suspension control arm.* |
| | Disturbed front end alignment | *Check front end alignment.* |
| | Tire not adequately inflated | *Inflate tires to proper pressure.* |
| | Bind in steering column | *Repair or replace.* |
| | Low fluid level, loose drive belt or malfunction of power steering system | *Check and correct. Refer to "P/S System Symptom Diagnosis: in Section 6C".* |
| ***Too much play in steering*** | Wheel bearings worn | *Replace wheel bearing.* |
| | Loose steering gear case bolts | *Tighten.* |
| | Faulty steering gear case | *Replace steering gear case assembly.* |
| | Worn steering shaft joints | *Replace joint.* |
| | Worn tie rod ends or tie rod inside ball joints | *Replace tie rod end or steering gear case.* |
| | Worn lower ball joints | *Replace front suspension control arm.* |
| ***Poor return ability*** | Bind in tie rod end ball studs | *Replace tie rod end.* |
| | Bind in ball joints | *Replace ball joint.* |
| | Bind in steering column | *Repair or replace.* |
| | Disturbed front end alignment | *Check and adjust front end alignment.* |
| | Malfunction of power steering system | *Check and correct. Refer to "P/S System Symptom Diagnosis: in Section 6C".* |
| | Tires not adequately inflated | *Adjust pressure.* |
| ***Steering noise (rattle or chuckle)*** | Loose bolts and nuts | *Retighten.* |
| | Broken or otherwise damaged wheel bearings | *Replace.* |
| | Worn or sticky tie rod ends | *Replace.* |
| | Malfunction of power steering system | *Check and correct. Refer to "P/S System Symptom Diagnosis: in Section 6C".* |
| ***Wander or poor steering stability*** | Mismatched or uneven tires | *Replace tire or inflate tires to proper pressure.* |
| | Loose ball joints and tie rod ends | *Replace suspension control arm or tie rod end.* |
| | Faulty shock absorbers / struts or mounting | *Replace absorber / strut or repair mounting.* |
| | Loose stabilizer bar | *Tighten or replace stabilizer bar or bushes.* |
| | Broken or sagging springs | *Replace spring.* |
| | Faulty steering gear case | *Replace steering gear case assembly.* |
| | Front end alignment | *Check front end alignment.* |
| ***Erratic steering when braking*** | Worn wheel bearings | *Replace wheel bearing.* |
| | Broken or sagging springs | *Replace spring.* |
| | Leaking wheel cylinder or caliper | *Repair or replace wheel cylinder or caliper.* |
| | Warped discs | *Replace brake disc.* |
| | Badly worn brake linings | *Replace brake shoe lining.* |
| | Drum is out of round in some brakes | *Replace brake drum.* |
| | Wheel tires are inflated unequally | *Inflate tires to proper pressure.* |
| | Defective wheel cylinders | *Replace or repair wheel cylinder.* |
| | Disturbed front end alignment | *Check front end alignment.* |

www.cargeek.ir

www.CarGeek.ir


# Steering Wheel and Column

## Precautions

### Service Precautions of Air Bag Steering Wheel and Column

S5JB0A6200001

For service precautions, refer to “Precautions on Service and Diagnosis of Air Bag System: in Section 8B”.

### Handling and Storage of Air Bag Steering Wheel and Column

S5JB0A6200002

For handling and storage, refer to “Precautions on Handling and Storage of Air Bag System Components: in Section 8B”.

### Disposal of Air Bag Steering Wheel and Column

S5JB0A6200003

For disposal, refer to “Precautions on Disposal of Air Bag and Seat Belt Pretensioner: in Section 8B”.

## General Description

### Steering Wheel and Column Construction

S5JB0A6201001

This double tube type steering column has the following three important features in addition to the steering function:

- The column is energy absorbing, designed to compress in a front-end collision.
- The ignition switch and lock are mounted conveniently on this column.
- With the column mounted lock, the ignition and steering operations can be locked to inhibit theft of the vehicle.

To insure the energy absorbing action, it is important that only the specified screws, bolts and nuts be used as designated, and that they are tightened to the specified torque. When the column assembly (6) is removed from the vehicle, special care must be taken in handling it. Use of a steering wheel puller or a sharp blow on the end of the steering shaft, leaning on the assembly, or dropping the assembly could shear the plastic shear pins which maintain column length and position.

The driver air bag (inflator) module is one of the supplemental restraint (air bag) system components and is mounted to the center of the steering wheel (1). During certain frontal crashes, the air bag system supplements the restraint of the driver’s and passenger’s seat belts by deploying the air bags. The air bag (inflator) module should be handled with care to prevent accidental deployment. When servicing, be sure to observe “Precautions on Service and Diagnosis of Air Bag System: in Section 8B”.

www.cargeek.ir

www.CarGeek.ir

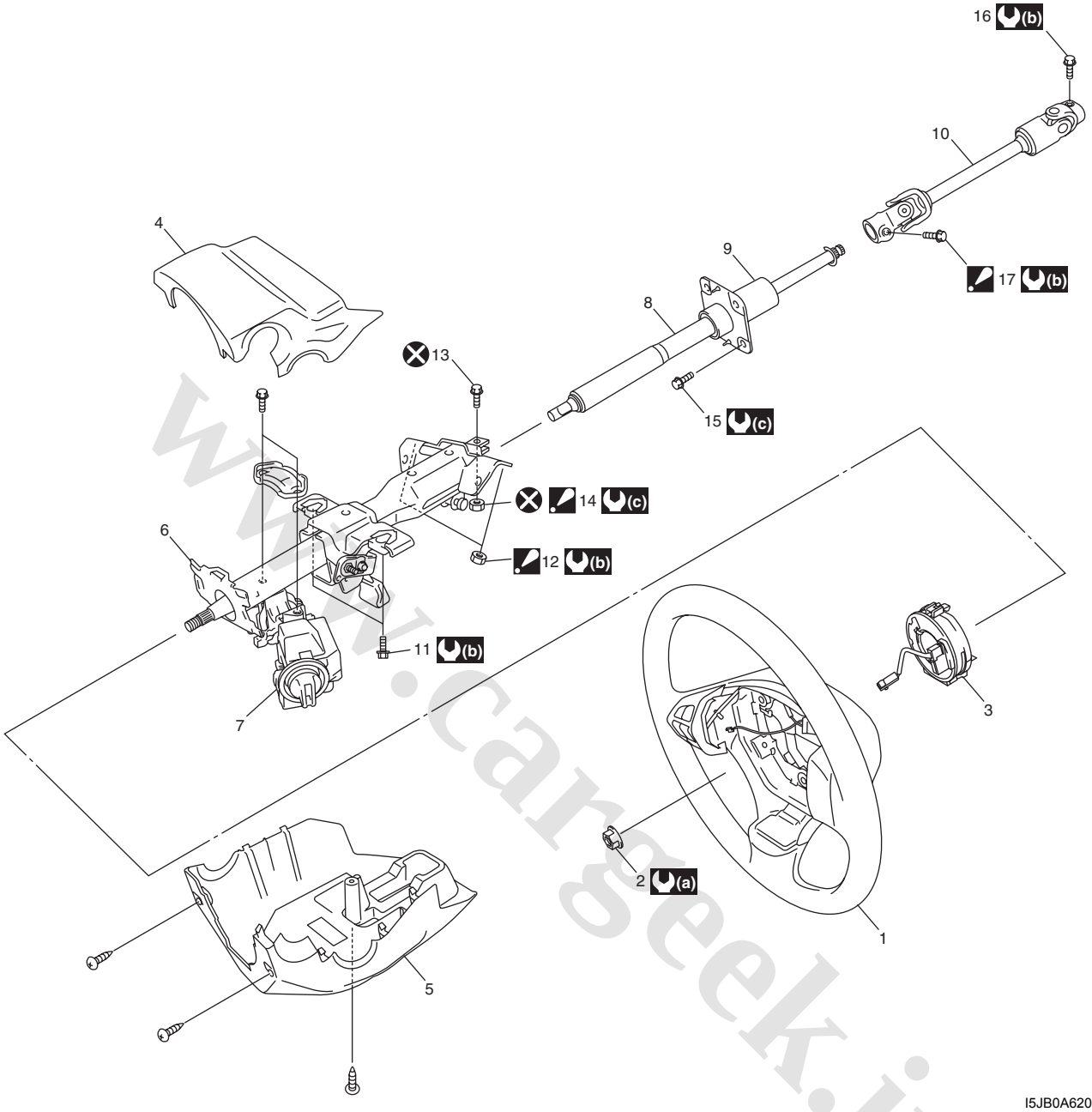


I5JB0A620001-03

| | | |
|---|---|---|
| 1. Steering wheel | 8. Steering upper shaft assembly | 15. Steering upper shaft mounting bolt |
| 2. Steering shaft nut | 9. Steering column lower seal | 16. Steering lower shaft assembly lower joint bolt |
| 3. Contact coil cable assembly | 10. Steering lower shaft assembly | 17. Steering lower shaft assembly upper joint bolt<br>: After tightening all mounting bolts and nuts and all joint bolts and nuts, tighten lower shaft lower joint bolt. |
| 4. Steering column upper cover | 11. Steering column assembly mounting bolt | (a) : 33 N·m (3.3 kgf-m, 24.0 lb-ft) |
| 5. Steering column lower cover | 12. Steering column assembly mounting nut<br>: After tightening column mounting nut, tighten column mounting bolt. | (b) : 25 N·m (2.5 kgf-m, 18.0 lb-ft) |
| 6. Steering column assembly | 13. Steering upper shaft assembly upper joint bolt | (c) : 23 N·m (2.3 kgf-m, 17.0 lb-ft) |
| 7. Steering lock assembly | 14. Steering upper shaft assembly upper joint nut<br>: After tightening upper shaft mounting bolts, tighten upper shaft joint nut. | : Do not reuse. |

www.cargeek.ir

www.CarGeek.ir


# Diagnostic Information and Procedures

## Air Bag Steering Wheel and Column Symptom Diagnosis

S5JB0A6204001

For diagnosis of the steering wheel and steering column, refer to “Steering Symptom Diagnosis: in Section 6A”. For diagnosis of the air bag system, refer to “Air Bag Diagnostic System Check: in Section 8B”.

## Air Bag Steering Wheel and Column Inspection and Repair Required after Accident

S5JB0A6204002

After accident, whether the air bag has been deployed or not, be sure to checks, inspections and repairs described under “Checking Steering Column for Accident Damage: ” as well as “Repair and Inspection Required after Accident: in Section 8B”.

## Diagnosis and Servicing of Air Bag Steering Wheel and Column

S5JB0A6204003

For diagnosis and servicing, refer to “Precautions on Service and Diagnosis of Air Bag System: in Section 8B”.

# Repair Instructions

## Checking Steering Column for Accident Damage

S5JB0A6206001

**NOTE**

**Vehicles involved in accidents resulting in body damage, where steering column has been impacted or air bag deployed, may have a damaged or misaligned steering column.**

- Check that 2 capsules (1) are attached to steering column bracket (2) securely. Check clearance between capsules and steering column bracket. Clearance should be 0 mm (0 in.) on both sides. If found loose or clearance, replace steering column assembly.

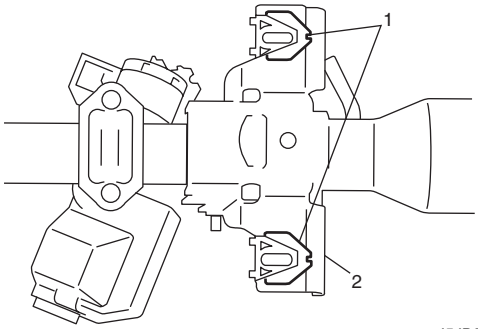


I5JB0A620002-01

- Check two rivets (1) of steering column assembly for loose, crack and breakage. If found loose, crack and breakage, replace steering column assembly with new one.
- Take measurement “a” and “b” as shown in the figure. If it is shorter than specified length, replace column assembly with a new one.

**<u>Steering column assembly length</u>**
**“a”: 471.0 ± 1.0 mm (18.54 ± 0.04 in.)**
**“b”: 423.9 ± 1.0 mm (16.69 ± 0.04 in.)**

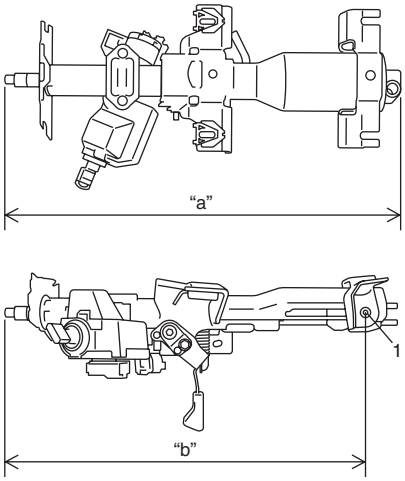


I5JB0A620003-02

- Check steering shaft for smooth rotation.
  If found defective, replace as column assembly.
- Check steering shaft and column for bend, cracks or deformation.
  If found defective, replace as column assembly.
- Check steering upper shaft lower seal for breakage or deformation.
  If found defective, replace.
- Check steering shaft joints and shaft for any damages such as crack, breakage, malfunction or excessive play.
  If anything is found faulty, replace steering upper shaft assembly, steering lower shaft assembly or steering column assembly.

www.cargeek.ir

www.CarGeek.ir

- Check steering upper shaft assembly for following conditions.
  - Steering upper shaft assembly (1) is not bent or damaged.
  - Lower seal (2) is not damaged.
  - Upper joint (3) turns with light hand force and lower joint (4) turns at the same time.

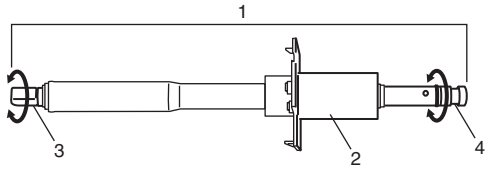

I5JB0A620004-01

  - Shaft (1) expands and contracts easily with light force.

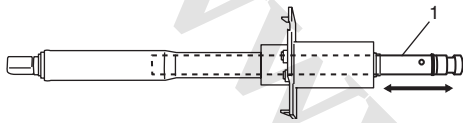

I5JB0A620005-01

  - When shaft is made to contract with light force until it stops, its length “a” is longer than specified value.

**⚠ CAUTION**

**Do not apply excessive force to shaft when making it contract. Its internal plug may be damaged.**

**<u>Steering upper shaft assembly length</u>**
**“a”: 363.0 mm (14.29 in.)**

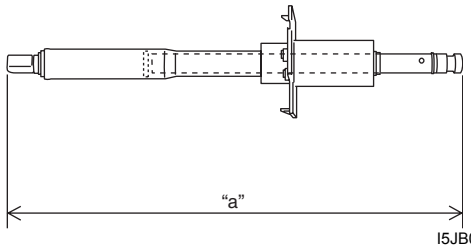

I5JB0A620006-02

**NOTE**

**If shaft has come off in sleeve due to an accident or some other reason as shown in figure, its internal plug has come off or been damaged. The same applies when length of steering upper shaft assembly is short. When anything faulty is noted in above check, replace steering upper shaft assembly with a new one.**

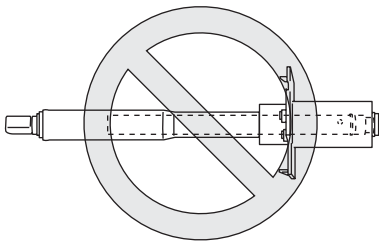
I5JB0A620007-03

## Steering Wheel Removal and Installation

S5JB0A6206002

**⚠ CAUTION**

**Removal of the steering wheel allows the contact coil cable assembly to turn freely but do not turn the contact coil cable assembly more than allowable number of turns (about two and a half turns from the center position clockwise or counterclockwise respectively), or coil will break.**

### Removal

1) Remove driver air bag (inflator) module from steering wheel referring to “Driver Air Bag (Inflator) Module Removal and Installation: in Section 8B”.
2) Disconnect horn connector and audio control switch connector, if equipped.
3) Remove steering shaft nut.
4) Make alignment marks (1) on steering wheel and shaft for a guide during reinstallation.

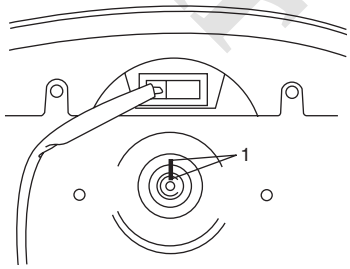

I5JB0A620008-01

www.cargeek.ir

www.CarGeek.ir


5) Remove steering wheel (1) with special tool.

**⚠ CAUTION**

**Do not hammer the end of the shaft. Hammering it will loosen the plastic shear pins which maintain the column length and impair the collapsible design of the column.**

**Special tool**
**(A): 09944–36011**

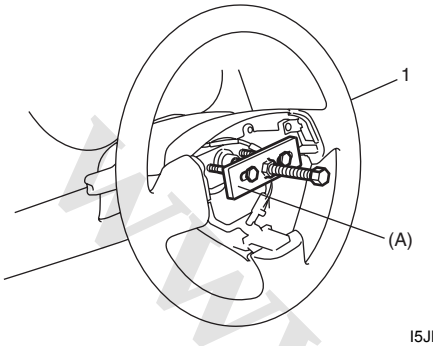


I5JB0A620009-01

**Installation**

1) Check that vehicle's front tires are at straight-ahead position and contact coil cable assembly is centered. Refer to "Centering Contact Coil Cable Assembly: ".

**⚠ CAUTION**

**These two conditions are prerequisite for installation of steering wheel. If steering wheel has been installed without these conditions, contact coil cable assembly will break when steering wheel is turned.**

2) Install steering wheel (1) to steering shaft with 2 lugs (2) on contact coil cable assembly fitted in two grooves (3) in the back of steering wheel and also aligning marks (4) on steering wheel and steering shaft.

3) Tighten steering shaft nut to specified torque.

**Tightening torque**
**Steering shaft nut: 33 N·m (3.3 kgf-m, 24.0 lb-ft)**

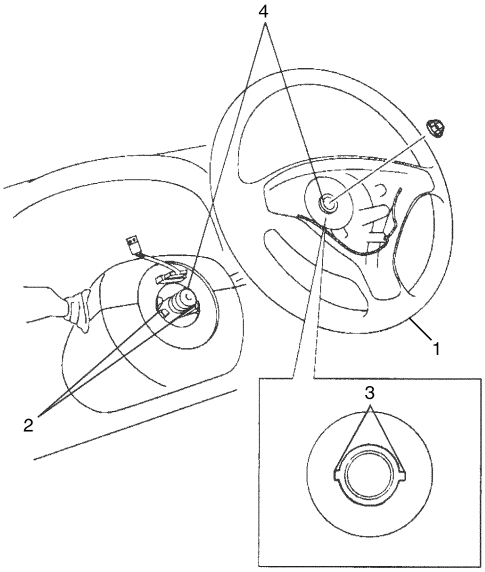


I5JB0A620010-01

4) Connect horn connector and audio control switch connector, if necessary.

5) Install driver air bag (inflator) module to steering wheel. Refer to "Driver Air Bag (Inflator) Module Removal and Installation: in Section 8B".

## Contact Coil Cable Assembly Removal and Installation

S5JB0A6206013

**⚠ CAUTION**

**Do not turn contact coil cable assembly more than allowable number of turns (about two and a half turns from the center position clockwise or counterclockwise respectively), or coil will break.**

**Removal**

1) Remove steering wheel from steering column. Refer to "Steering Wheel Removal and Installation: ".

2) Remove steering column hole cover (1).

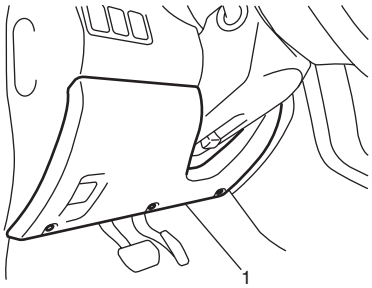


I5JB0A620011-01

www.cargeek.ir

www.CarGeek.ir

3) Remove steering column cover screws (1) (3 pieces).
4) Separate upper cover (2) and lower cover (3), then remove them.

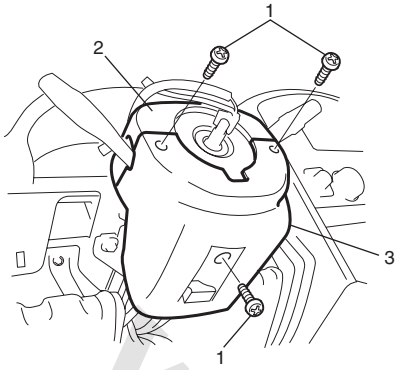

I5JB0A620012-01

5) Disconnect all connectors for contact coil cable assembly.
6) Remove contact coil cable assembly (1) from steering column.

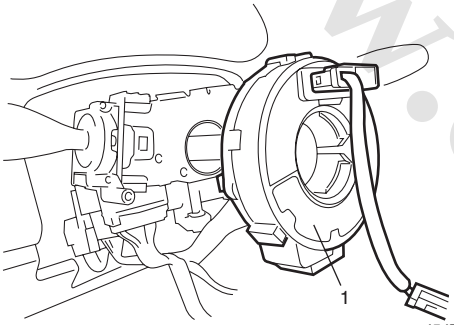

I5JB0A620013-01

**Installation**

1) Check to make sure that vehicle's front tires are set at straight-ahead position and then ignition switch is at "LOCK" position.
2) Install contact coil cable assembly to steering column.

**NOTE**

**New contact coil cable assembly is supplied with contact coil cable assembly set and held at its center position with a lock pin (1). Remove this lock pin after installing contact coil cable assembly to steering column.**

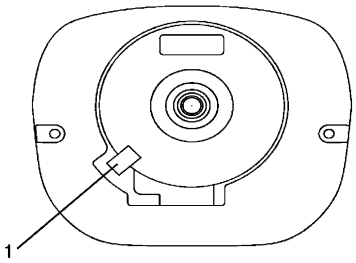

I5JB0A620014-01

3) Connect all connectors that have been removed in "Removal".
4) Install steering column upper cover (2) and lower cover (3), and then tighten steering column cover screws (1).

**⚠ CAUTION**

**When installing lower cover (3) and upper cover (2), be careful so that each lead wire is not caught between covers.**

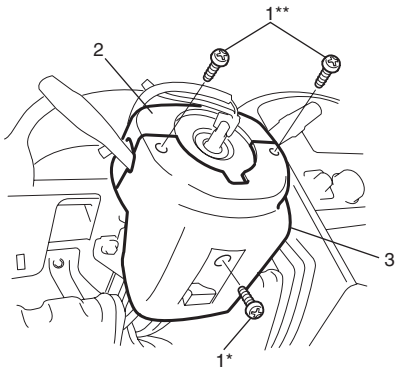

I5JB0A620015-01

| | |
|---|---|
| *: | Standard screw |
| **: | Tapping screw |

5) Install steering column hole cover (1).

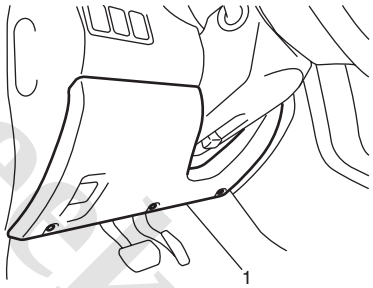

I5JB0A620011-01

6) Install steering wheel to steering column. Refer to "Steering Wheel Removal and Installation: ".

www.cargeek.ir

www.CarGeek.ir


## Contact Coil Cable Assembly Inspection

S5JB0A6206014

**⚠ CAUTION**

**Do not turn contact coil cable assembly more than allowable number of turns (about two and a half turns from the center position clockwise or counterclockwise respectively), or coil will break.**

Check contact coil cable assembly (1) wire harness for any signs of scorching, melting or other damage.
If it is damaged, replace.

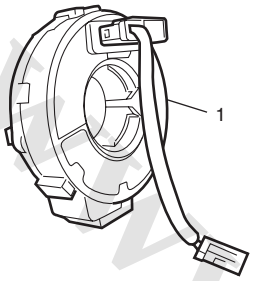


I5JB0A620016-01

## Centering Contact Coil Cable Assembly

S5JB0A6206003

**⚠ CAUTION**

**Removal of the steering wheel allows the contact coil cable assembly to turn freely but do not turn the contact coil cable assembly more than allowable number of turns (about two and a half turns from the center position clockwise or counterclockwise respectively), or coil will break.**

1) Check that vehicle's wheels (front tires) are set at straight-ahead position.
2) Check that ignition switch is at LOCK position.
3) Turn contact coil cable assembly (2) counterclockwise slowly with a light force till contact coil cable assembly will not turn any further.

**NOTE**

**Contact coil cable assembly can turn about 5 turns at maximum, that is, if it is at the center position, can turn about two and a half turns both clockwise and counterclockwise.**

4) From the position where contact coil cable assembly (2) became unable to turn any further (it stopped), turn it back clockwise about two and a half rotations and align center mark with alignment mark (1).

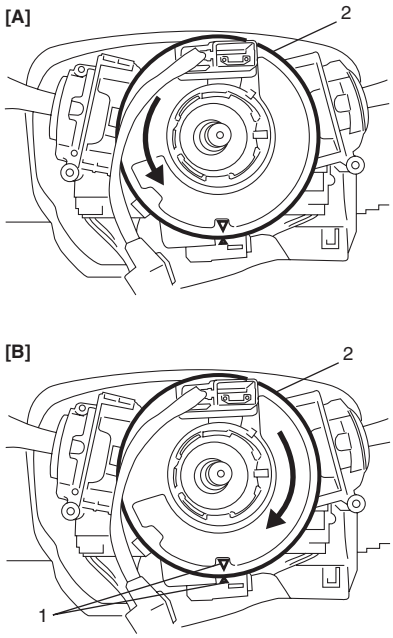


I5JB0A620017-03

| | |
|---|---|
| [A]: | Turn slowly till coil stops |
| [B]: | Turn contact coil cable assembly back about 2 and a half turns |

## Steering Column Assembly Removal and Installation

S5JB0A6206006

**⚠ CAUTION**

**Once the steering column assembly is removed from the vehicle, the column is extremely susceptible to damage.**
**Dropping the column assembly on its end could collapse the steering shaft or loosen the plastic shear pins which maintain column length leaning on the column assembly could cause it to bend or deform.**
**Any of the above damage could impair the column's collapsible design.**
**When loosening steering column mounting bolts and nuts, make sure that steering column assembly and steering upper shaft assembly have been separated. Loosening them with steering column assembly and steering upper shaft assembly assembled could cause damage to upper joint and mounting bracket in steering upper shaft assembly.**

www.cargeek.ir

www.CarGeek.ir

## Removal

**⚠ WARNING**

**Never rest a steering column assembly on the steering wheel with air bag (inflator) module face down and column vertical. Otherwise personal injury may result.**

**⚠ CAUTION**

**Never turn steering wheel while steering column with steering wheel is removed. Turning steering wheel more than about two and a half turns will break contact coil cable assembly.**

1) Disconnect negative (–) cable at battery.
2) Disable air bag system referring to “Disabling Air Bag System: in Section 8B”.
3) Remove steering wheel and contact coil cable assembly. Refer to “Steering Wheel Removal and Installation: ” and “Contact Coil Cable Assembly Removal and Installation: ”.
4) Remove instrument panel under cover (1) from instrument panel.

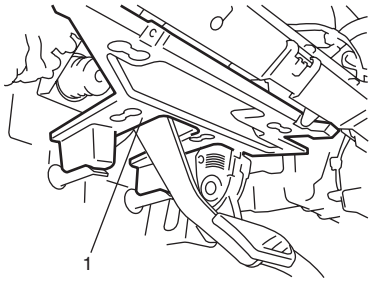


I5JB0A620018-01

5) Remove immobilizer control module (ICM) referring to “Immobilizer Control Module (ICM) Removal and Installation: in Section 10C”.
6) Remove lighting switch referring to “Headlight Switch (in Lighting Switch) Removal and Installation: in Section 9B”.
7) Remove washer switch referring to “Windshield Wiper and Washer Switch Removal and Installation: in Section 9D”.
8) Disconnect connector from steering lock assembly.
9) For A/T vehicle, disconnect shift (key) interlock cable (1) from ignition switch with ignition switch turned at ACC position.
   After disconnecting, turn ignition switch to LOCK position.

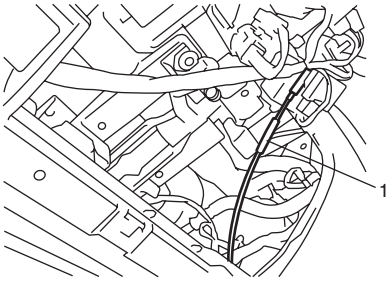


I5JB0A620019-01

10) Remove steering upper shaft upper joint bolt (1) and nut (2).

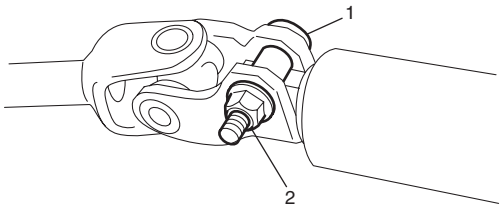


I5JB0A620020-01

11) Remove column support bracket. (if equipped)
12) Remove steering column assembly (1) mounting bolts (2) and nuts (3).

**NOTE**

**Tilt lever should not be moved before mounting bolts and nuts are tighten completely.**

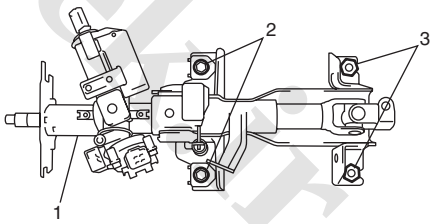


I5JB0A620021-01

13) Remove steering column assembly from vehicle.

www.cargeek.ir

www.CarGeek.ir


## Installation

**⚠ CAUTION**

**After tightening steering column assembly mounting bolts and nuts, steering shaft joint bolts should be tightened.**

1) Be sure that front wheels and steering wheel are in straight-ahead position.
2) Align flat part “A” of steering upper shaft upper joint (1) with bolt hole “B” of steering column assembly (2) as shown in the figure. Then connect steering upper shaft upper joint.

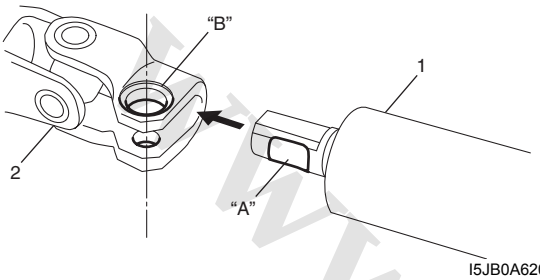

I5JB0A620022-01

3) Install steering column assembly (1) with contacting upper side of lower bracket slits to mounting bolts. Tighten steering column upper mounting nuts (3) first and then lower mounting bolts (2) to specified torque.

**Tightening torque**
**Steering column assembly mounting bolt and nut (a): 25 N·m (2.5 kgf-m, 18.0 lb-ft)**

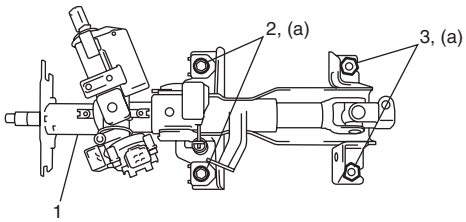

I5JB0A620023-01

4) Install column support bracket. (if equipped)
5) Install new steering upper shaft upper joint bolt (2) and nut (1). Tighten new steering upper shaft upper joint nut (1) to specified torque.

**NOTE**

**Do not reuse steering upper shaft upper joint bolt and nut.**
**Be sure to use new bolt and nut when installing.**

**Tightening torque**
**Steering upper shaft assembly upper joint nut (a): 23 N·m (2.3 kgf-m, 17.0 lb-ft)**

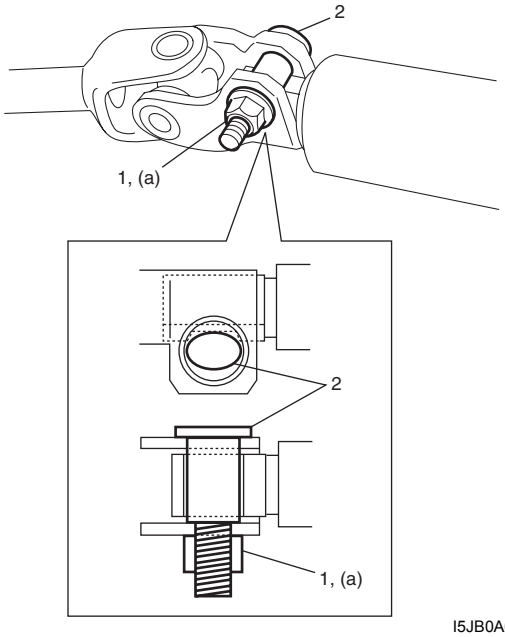

I5JB0A620024-01

6) For A/T vehicle, connect shift (key) interlock cable (1) to ignition switch with ignition switch turned at ACC position.
And then turn ignition switch LOCK position.

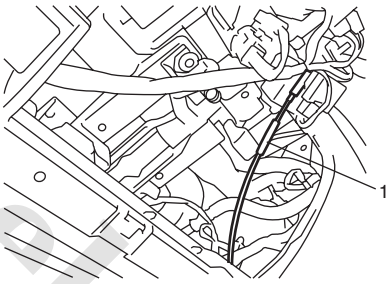

I5JB0A620019-01

7) Connect steering lock assembly connector.
8) Install contact coil cable assembly referring to “Contact Coil Cable Assembly Removal and Installation: ”.
9) Install washer switch referring to “Windshield Wiper and Washer Switch Removal and Installation: in Section 9D”.
10) Install lighting switch referring to “Headlight Switch (in Lighting Switch) Removal and Installation: in Section 9B”.
11) Install immobilizer control module (ICM) referring to “Immobilizer Control Module (ICM) Removal and Installation: in Section 10C”.

www.cargeek.ir

 www.CarGeek.ir

12) Install instrument panel under cover (1) to instrument panel.

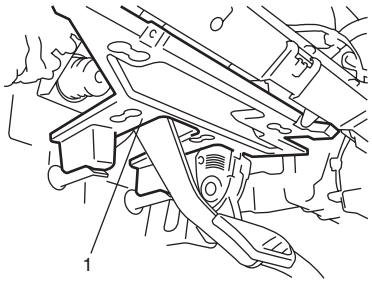


I5JB0A620018-01

13) Install steering column hole cover (1).

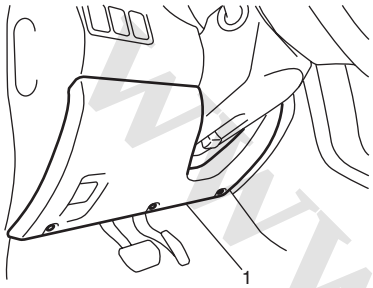


I5JB0A620011-01

14) If steering wheel is removed, install it by referring to “Steering Wheel Removal and Installation: ”.
15) Connect negative (–) cable to battery.
16) After installing steering column assembly, be sure to enable air bag system by referring to “Enabling Air Bag System: in Section 8B”.

## Steering Column Assembly Inspection

S5JB0A6206007

Check steering column for damage and operation referring to “Checking Steering Column for Accident Damage: ”.

## Ignition Switch Cylinder Assembly Removal and Installation (Without Keyless Start System)

S5JB0A6206015

### Removal

1) Disconnect negative (–) cable at battery.
2) Disable air bag system referring to “Disabling Air Bag System: in Section 8B”.
3) Remove steering column upper and lower covers.
4) Remove immobilizer control module referring to “Immobilizer Control Module (ICM) Removal and Installation: in Section 10C”.
5) Remove ignition switch cylinder assembly as follows.
   a) Turn ignition key to “ACC” position.
   b) Insert 2 mm (0.078 in.) rod (2) through hole (3) and push ignition switch cylinder lock.
   c) Detach ignition switch cylinder assembly (1) from steering lock assembly (4).

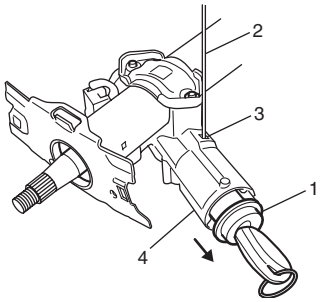


I5JB0A620025-01

### Installation

1) Install ignition switch cylinder assembly as follows.
   a) Turn ignition key to “ACC” position.
   b) In this state, push ignition switch cylinder assembly into steering lock assembly till it clicks.
2) Install immobilizer control module (ICM) referring to “Immobilizer Control Module (ICM) Removal and Installation: in Section 10C”.
3) Install upper and lower cover and screws (1).

**⚠ CAUTION**

**When installing covers, be careful so that each lead wire is not caught between covers.**

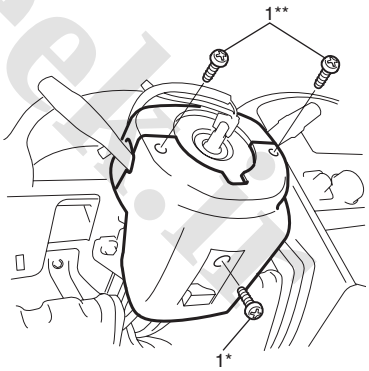


I5JB0A620026-01

| | |
|---|---|
| *: | Standard screw |
| **: | Tapping screw |

4) Enabling air bag system referring to “Disabling Air Bag System: in Section 8B”.

www.cargeek.ir

www.CarGeek.ir


## Steering Lock Assembly (Ignition Switch) Removal and Installation

S5JB0A6206008

### Removal

1) Remove steering column assembly. Refer to “Steering Column Assembly Removal and Installation: ”.
2) Using center punch (with sharp point) (1) as shown in the figure, loosen and remove steering lock mounting bolts (2).

**NOTE**

**Use care not to damage aluminum part of steering lock body (3) with center punch (1).**

3) Turn ignition key to ACC or ON position and remove steering lock assembly (3) from steering column assembly (4).

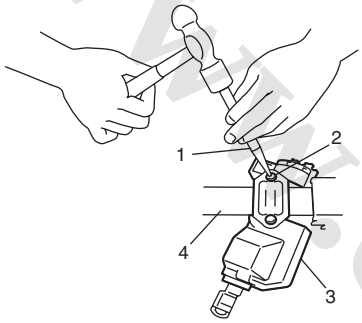


I5JB0A620027-01

### Installation

1) Position oblong hole of steering shaft (2) in the center of hole in steering column assembly (1).

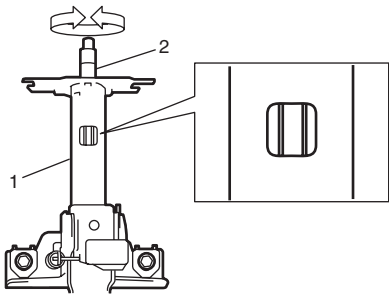


I5JB0A620028-01

2) Turn ignition key to ACC or ON position and install steering lock assembly onto column.
3) Now turn ignition key to LOCK position and pull it out.
4) Align hub on lock with oblong hole of steering shaft and rotate shaft to assure that steering shaft is locked.
5) Tighten new bolts until head of each bolt is broken off.

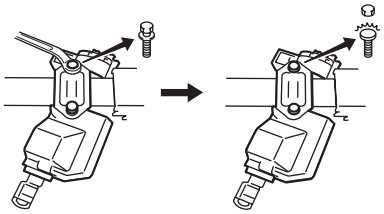

I5JB0A620029-01

6) Turn ignition key to ACC or ON position and check to be sure that steering shaft rotates smoothly. Also check for lock operation.
7) Install steering column. Refer to “Steering Column Assembly Removal and Installation: ”.

## Adjustable Steering Column Release Lever Inspection

S5JB0A6206009

Check to make sure that the followings:

- Steering column (1) moves smoothly when adjustable steering column release lever is at upper position (2) (i.e., steering column is not locked).
- Steering column (1) is fixed securely when adjustable steering column release lever is at lower position (3) (i.e., steering column is locked).

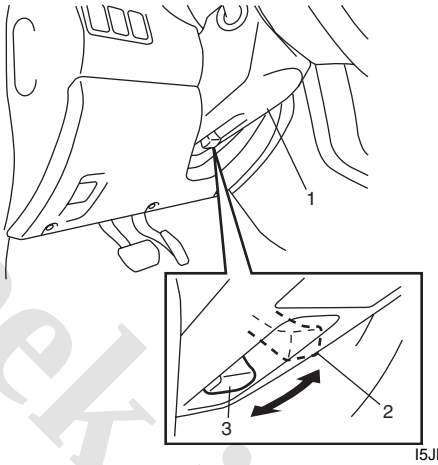


I5JB0A620030-01

## Steering Upper Shaft Assembly Removal and Installation

S5JB0A6206010

**⚠ CAUTION**

**Never turn steering wheel while steering upper shaft assembly is removed.**
**Should it have been turned and contact coil cable assembly have got out of its centered position, it needs to be centered again. Also, turning steering wheel more than about two and a half turns will break contact coil cable assembly.**

www.cargeek.ir

 www.CarGeek.ir

### Removal

1) Turn steering wheel so that vehicle's front tires are at straight-ahead position.
2) Turn ignition switch to LOCK position and remove key.
3) Remove steering column assembly from vehicle referring to "Steering Column Assembly Removal and Installation: ".
4) Make alignment marks (3) on steering upper shaft (2) and steering lower shaft (1) for a guide during reinstallation.

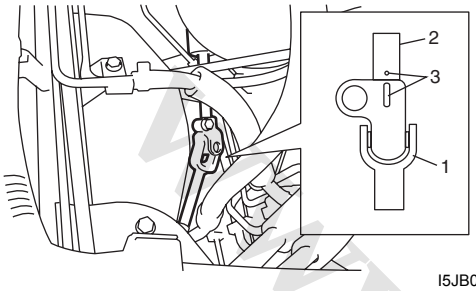


I5JB0A620031-01

5) Remove joint bolt (1) and disconnect upper shaft (3) from lower shaft (2).

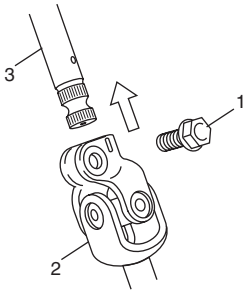


I5JB0A620032-01

6) Remove steering upper shaft mounting bolts (1) (4 pieces).

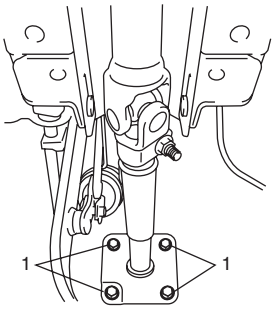


I5JB0A620033-01

7) Remove steering upper shaft assembly from vehicle.

### Installation

1) Be sure that front tires and steering wheel are in straight-ahead position.
2) Install steering upper shaft assembly to dash panel. Tighten steering upper shaft mounting bolts (1) to specified torque.

**Tightening torque**
**Steering upper shaft assembly mounting bolt (a): 23 N·m (2.3 kgf-m, 17.0 lb-ft)**

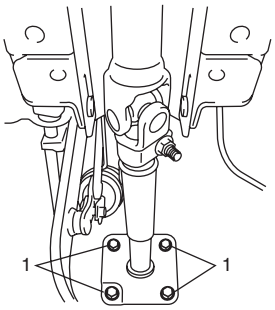


I5JB0A620033-01

3) Install steering column assembly to vehicle referring to "Steering Column Assembly Removal and Installation: ".
4) Install steering upper shaft (1) to steering lower shaft (2) by matching it to marks (3) made before removal.
5) Install joint bolt (4). Then tighten it to specified torque.

**Tightening torque**
**Steering upper shaft assembly lower joint bolt (a): 25 N·m (2.5 kgf-m, 18.0 lb-ft)**

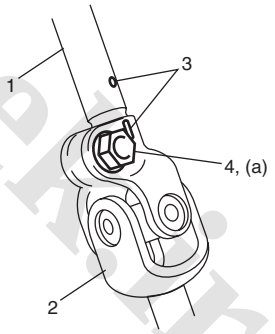


I5JB0A620034-01

## Steering Upper Shaft Assembly Inspection

S5JB0A6206011

Check steering shaft damage and operation referring to "Checking Steering Column for Accident Damage: ".

www.cargeek.ir

www.CarGeek.ir


## Steering Lower Shaft Assembly Removal and Installation

S5JB0A6206012

**⚠ CAUTION**

**Never turn steering wheel while steering lower shaft assembly is removed.**
**Should it have been turned and contact coil cable assembly have got out of its centered position, it needs to be centered again. Also, turning steering wheel more than about two and a half turns will break contact coil cable assembly.**

### Removal

1) Turn steering wheel so that vehicle's front tires are at straight-ahead position.
2) Turn ignition switch to LOCK position and remove key.
3) Make alignment marks (1) on steering upper shaft (2) and steering lower shaft for a guide during reinstallation.
4) Remove joint bolt (4) and disconnect upper shaft (2) from joint (3).

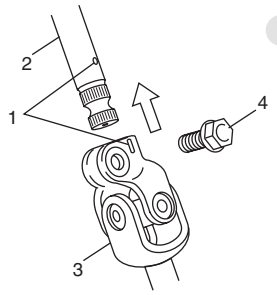


I5JB0A620035-02

5) Remove joint bolt (2) and then remove lower shaft assembly (1).

**NOTE**

**When yellow paint (3) cannot be confirmed make alignment marks on steering lower shaft assembly lower joint (1) and pinion shaft of P/S gear case assembly (4) for a guide during reinstallation.**

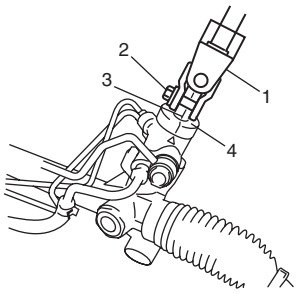


I5JB0A620036-01

### Installation

1) Check for following conditions before installing lower shaft.
   - Front tires of vehicle are at straight-ahead position.
   - Match mark on gear case (6) and that on pinion shaft (4) are aligned.
2) Install lower shaft (2) to pinion shaft (5), aligning slit (1) in lower shaft with match mark (4) on pinion shaft (5).
3) Install joint bolt (3) and tighten it to specified torque.

**Tightening torque**
**Steering lower shaft assembly lower joint bolt**
**(a): 25 N·m (2.5 kgf-m, 18.0 lb-ft)**

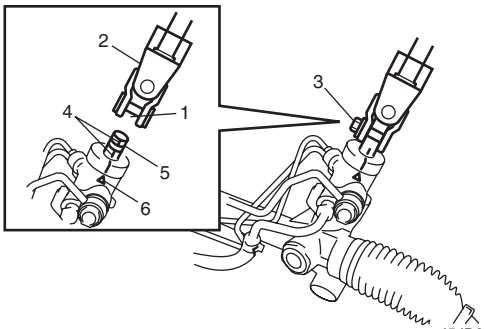


I5JB0A620037-01

4) Install upper shaft (1) to lower shaft (3) it matching to marks (4) made before removal.
   Install joint bolt (2). Then tighten it specified torque.

**NOTE**

**Be sue that front wheels and steering wheel are in straight-ahead position.**

**Tightening torque**
**Steering lower shaft assembly upper joint bolt**
**(a): 25 N·m (2.5 kgf-m, 18.0 lb-ft)**

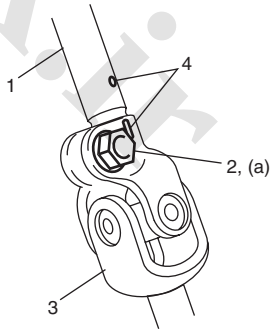


I5JB0A620038-01

www.cargeek.ir

 www.CarGeek.ir

# Specifications

## Tightening Torque Specifications

S5JB0A6207001

| Fastening part | Tightening torque | | | Note |
|---|---|---|---|---|
| | N·m | kgf-m | lb-ft | |
| Steering shaft nut | 33 | 3.3 | 24.0 | ☞ |
| Steering column assembly mounting bolt and nut | 25 | 2.5 | 18.0 | ☞ |
| Steering upper shaft assembly upper joint nut | 23 | 2.3 | 17.0 | ☞ |
| Steering upper shaft assembly mounting bolt | 23 | 2.3 | 17.0 | ☞ |
| Steering upper shaft assembly lower joint bolt | 25 | 2.5 | 18.0 | ☞ |
| Steering lower shaft assembly lower joint bolt | 25 | 2.5 | 18.0 | ☞ |
| Steering lower shaft assembly upper joint bolt | 25 | 2.5 | 18.0 | ☞ |

**NOTE**

**The specified tightening torque is also described in the following.**
**“Steering Wheel and Column Construction: ”**

**Reference:**
For the tightening torque of fastener not specified in this section, refer to “Fastener Information:  in Section 0A”.

# Special Tools and Equipment

## Special Tool

S5JB0A6208001

| | |
|---|---|
| 09944–36011<br>Steering wheel remover<br>☞ 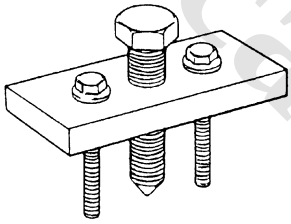 | |

www.cargeek.ir

www.cargeek.ir

www.CarGeek.ir


# Power Assisted Steering System

## Precautions

### P/S System Note

S5JB0A6300001

**NOTE**

- **Some parts in the power steering gear case cannot be disassembled or adjusted. For detailed information, refer to the description of “Steering Gear Case Construction: ”.**
- **All steering gear fasteners are important attaching parts in that they could affect the performance of vital parts and systems, and/or could result in major repair expense. They must be replaced with one of the same part number or with an equivalent part if replacement becomes necessary. Do not use a replacement part of lesser quality or substitute design. Torque values must be used as specified during reassembly to assure proper retention of these parts.**
- **Although the figures in this section show only the left-hand steering vehicle, the same work procedure and data apply to the right-hand steering vehicle.**

## General Description

### P/S System Construction

S5JB0A6301001

The power steering (P/S) system in this vehicle reduces the driver’s effort needed in turning the steering wheel by utilizing the hydraulic pressure generated by the power steering (P/S) pump (2) which is driven by the engine.
It is an integral type with the rack and pinion gears and the control valve unit, hydraulic pressure cylinder unit all built in the steering gear case (1).

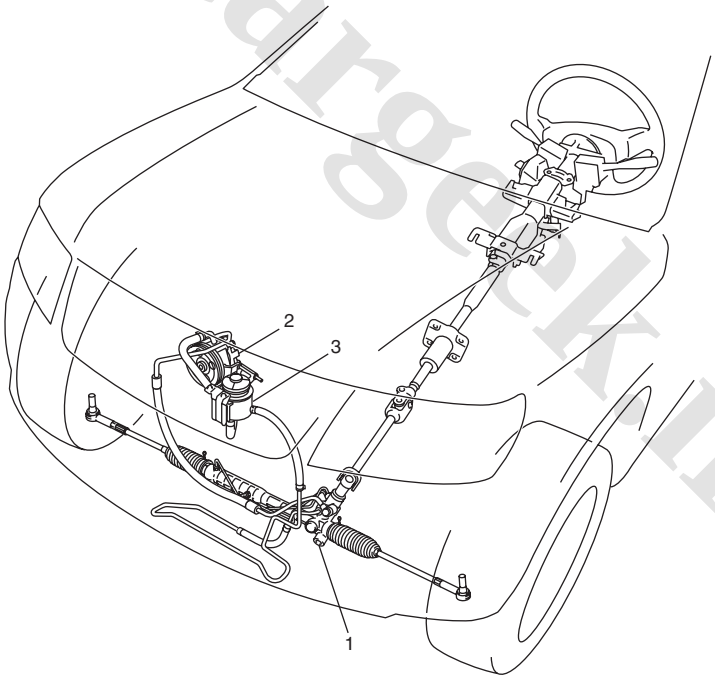


I5JB0A630001-01

3. P/S fluid reservoir

www.cargeek.ir

 www.CarGeek.ir

## Steering Gear Case Construction

S5JB0A6301002

The steering gear case consists of two sections: one including a cylinder and the other a valve. Main components of the cylinder section are a gear case (7), a rack (8) and a tube and those of the valve section are a valve case (10), a sleeve (4) and a stub shaft (2). The sleeve is linked with the pinion (6) through a pin (1) and the valve and stub shaft are integrated into one unit. Then the pinion and the stub shaft are linked to each other by means of the torsion bar (3).
Thus, when the stub shaft moves, the valve changes its position, thereby switching the hydraulic passage from the pump to the cylinder to help steering operation.
When turning the steering wheel feels heavy due to P/S fluid leakage or for some other reason (i.e., when in the manual steering mode), the stub shaft and pinion are in direct linkage and the force is output directly through the pinion and rack.

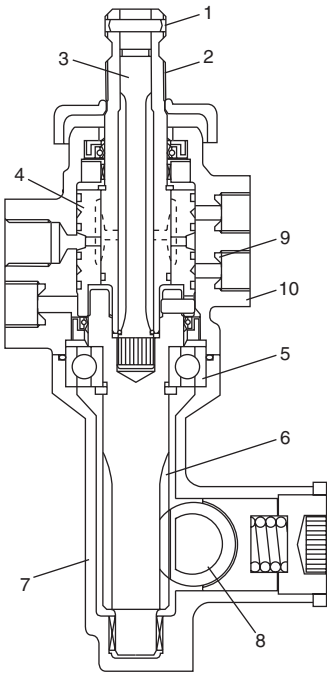


I5JB0A630002-01

| | |
|---|---|
| 5. Bearing | 9. Ferrule |

## P/S Pump Construction

S5JB0A6301003

The power steering pump is a vane type and is driven by the V-ribbed belt from the crankshaft.

**Power steering (P/S) pump specifications**

| Model | | Vane type |
|---|---|---|
| **Hydraulic pressure control** | **Relieved pressure** | **6370 kPa (63.7 kg/cm$^2$, 906 psi) for M16 engine**<br>**6860 kPa (68.6 kg/cm$^2$, 975 psi) for J20 engine** |
| | **Control device** | **Flow control valve and relief valve** |
| **Power steering pressure switch** | | **Switch turns on (closes) when the pressure is higher than 2500 – 3000 kPa (25 – 30 kg/cm$^2$, 356 – 427 psi).**<br>**ECM uses this signal for idle speed control.** |

### Flow Control Valve (Relief Valve)

As the discharge rate of the P/S pump increases in proportion to the pump revolution speed, a flow control valve is added to control it so that the optimum amount of fluid for steering operation is supplied according to the engine speed (driving condition).

www.cargeek.ir

www.CarGeek.ir


# Schematic and Routing Diagram

## P/S Fluid Flow Diagram

S5JB0A6302001

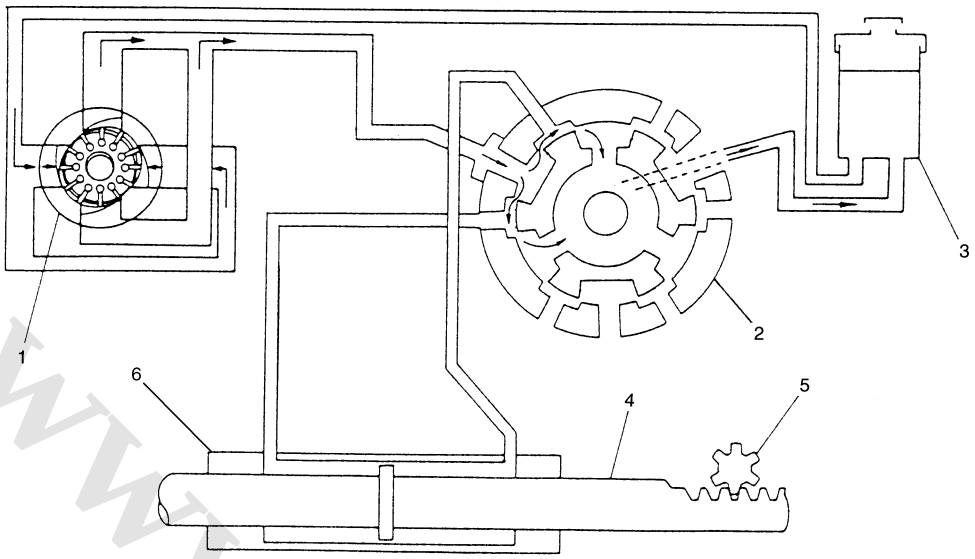


IYSQ01630002-01

| | | |
|---|---|---|
| 1. Power steering pump | 3. P/S fluid reservoir | 5. Pinion |
| 2. Valve section | 4. Rack | 6. Cylinder |

# Diagnostic Information and Procedures

## P/S System Symptom Diagnosis

S5JB0A6304001

| Condition | Possible cause | Correction / Reference Item |
|---|---|---|
| ***Steering wheel feels heavy (at low speed)*** | Fluid deteriorated, low viscosity, different type of fluid mixed | *Replace fluid.* |
| | Pipes or hoses deformed, air entering through joint | *Replace defective part.* |
| | Insufficient air purging from P/S circuit | *Purge air.* |
| | P/S belt worn, lacking in tension | *Adjust belt tension or replace belt as necessary.* |
| | Tire inflation pressure excessively low | *Inflate tire.* |
| | Front end alignment out of order | *Check and adjust front end alignment.* |
| | Steering wheel installed improperly (twisted) | *Install steering wheel correctly.* |
| | Bind in tie-rod or tie-rod end ball joint | *Replace defective part.* |
| | P/S pump hydraulic pressure fails to increase | *Check pressure and repair or replace defective part.* |
| | P/S pump hydraulic pressure increases but slowly | *Check pressure and repair or replace defective part.* |
| | Steering gear case malfunction | *Replace gear case.* |
| ***Steering wheel feels heavy momentarily when turning it to the left or right*** | Air drawn in due to insufficient amount of fluid | *Add fluid and purge air.* |
| | Slipping P/S belt | *Adjust belt tension or replace belt as necessary.* |
| | P/S pump hydraulic pressure fails to increase | *Check pressure and repair or replace defective part.* |
| | P/S pump hydraulic pressure increases but slowly | *Check pressure and repair or replace defective part.* |
| | Steering gear case malfunction | *Replace gear case.* |

www.cargeek.ir

 www.CarGeek.ir

| Condition | Possible cause | Correction / Reference Item |
|---|---|---|
| ***Poor recovery from turns*** | Deformed pipes or hoses | *Replace defective part.* |
| | Steering column installed improperly | *Install steering column correctly.* |
| | Front end alignment out of order | *Check and adjust front end alignment.* |
| | Ball joints binding | *Replace defective part.* |
| | P/S pump hydraulic pressure fails to increase | *Check pressure and repair or replace defective part.* |
| | P/S pump hydraulic pressure increases but slowly | *Check pressure and repair or replace defective part.* |
| | Steering gear case malfunction | *Replace gear case.* |
| ***Vehicle pulls to one side during straight driving*** | Mismatched or uneven tire | *Replace tire.* |
| | Low or uneven tire inflation pressure | *Inflate tires to proper pressure or adjust right and left tires inflation pressure.* |
| | Brake dragging in one wheel | *Repair.* |
| | Front end alignment out of order | *Check and adjust front end alignment.* |
| | Rear end alignment out of order | *Check and adjust rear end alignment.* |
| | Malfunction of control valve in gear case | *Replace gear case.* |
| ***Steering wheel play is large and vehicle wanders*** | Refer to “Steering Symptom Diagnosis: in Section 6A”. | |
| ***Fluid leakage*** | Loose joints of (hydraulic pressure) pipes and hoses | *Retighten.* |
| | Deformed or damaged pipes or hoses | *Replace defective part.* |
| ***Abnormal noise*** | Air drawn in due to insufficient amount of fluid | *Add fluid and purge air.* |
| | Air mixed into fluid from pipes or hoses | *Replace pipes or hoses.* |
| | Slipping (loose) P/S belt | *Adjust belt tension.* |
| | Worn P/S belt | *Replace belt.* |
| | Loose gear case fastening bolt | *Retighten bolts.* |
| | Loose linkage or joints | *Retighten.* |
| | Pipes or hoses in contact with part of vehicle body | *Install pipes and hoses correctly.* |
| | Vanes of P/S pump defective | *Replace defective part.* |
| | Malfunction of control valve in gear case | *Replace gear case.* |
| | Bearing of P/S pump shaft defective | *Replace bearing.* |
| ***No idle up*** | Power steering pressure switch defective | *Replace power steering pressure switch.* |

## Steering Wheel Check

S5JB0A6304002

- Check steering wheel for looseness or rattle by trying to move it in its shaft direction and lateral direction. If found defective, repair or replace.
- Check steering wheel for play, holding car in straight forward condition on the ground and with engine stopped.

**<u>Steering wheel play</u>**
**“a”: 0 – 30 mm (0 – 1.2 in.)**

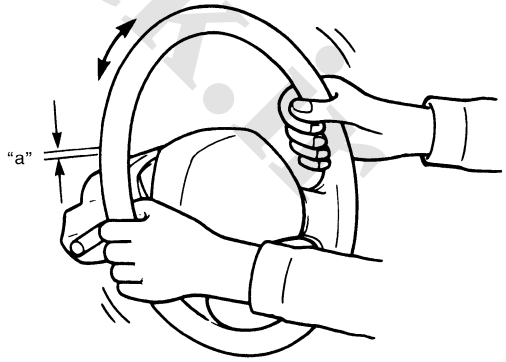


I5JB0A630004-02

If steering wheel play is not within specification, inspect as follows and replace if found defective.

– Tie-rod end ball stud for wear
– Lower ball joint for wear
– Steering shaft joint for wear
– Steering pinion or rack gear for wear or breakage
– Each part for looseness

www.cargeek.ir

## Steering Force Check

S5JB0A6304003

1) Place vehicle on level road and set steering wheel at straight-ahead position.
2) Check that tire inflation pressure is as specified. (Refer to tire placard.)
3) Start engine and keep it running till power steering fluid is warmed to 50 to 60 °C (122 to 140 °F).

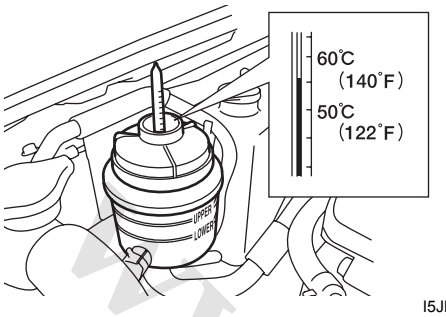


I5JB0A630005-01

4) With engine idling, measure steering force by pulling spring balancer hooked on steering wheel in tangential direction.

**Steering force**
**Less than 30 N (3.0 kg, 6.6 lb)**

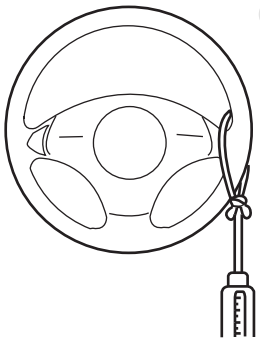

I5JB0A630057-01

## Steering Wheel Recovery Check

S5JB0A6304006

**⚠ WARNING**

**When performing a check, select a place where there is no traffic or possibility of a traffic accident and be very careful during testing to avoid occurrence of an accident.**

Check steering wheel for recovery as follows.

1) Rotate it to either right or left end.
2) Keep it at the end, and start the vehicle slowly.
3) Accelerate vehicle slowly.

If steering wheel begins to return at the vehicle speed less than 10 km/h (6.3 mph), it is normal condition.
If the check result is abnormal, diagnose the fault part referring to “Poor recovery from turns” in “P/S System Symptom Diagnosis: ”.

## Idle Up System Check

S5JB0A6304004

1) Warm up engine to normal operating temperature.
2) Turn A/C switch OFF, if equipped.
3) Turn steering wheel fully and check idle speed.
   Engine idle speed drops a little momentarily when steering wheel is turned fully but returns to its specified level immediately.
   If power steering pressure switch connector is connected, check the same with that connector disconnected.
   Momentary drop of engine idle speed should be less when it is connected than when disconnected.

## Hydraulic Pressure in P/S Circuit Check

S5JB0A6304005

1) After cleaning joint of high pressure hose and P/S pump thoroughly, disconnect hose from pump and install special tool (oil pressure gauge, attachment and hose).

**⚠ CAUTION**

**Take care not to cause damage to A/C condenser during service operation, if equipped.**

**Special tool**
**(A): 09915–77412**
**(B): 09915–77420**

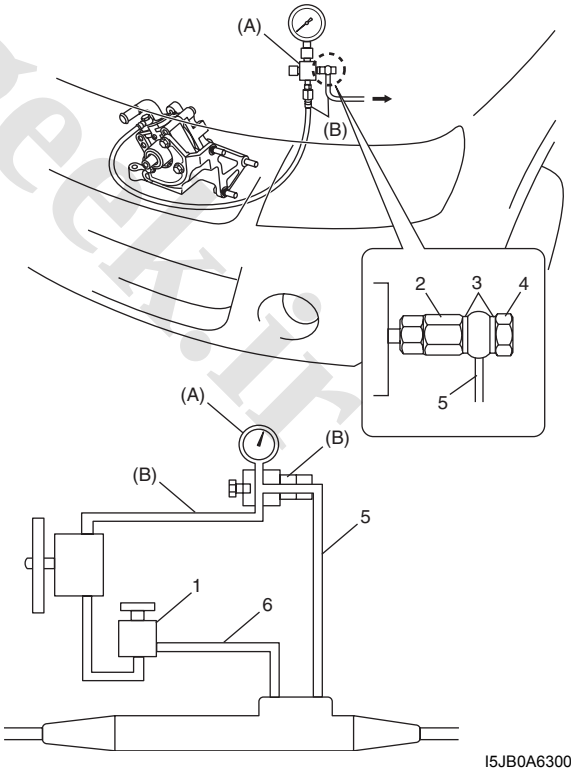


I5JB0A630007-02

| | |
|---|---|
| 1. P/S fluid reservoir | 4. Union bolt |
| 2. Attachment | 5. High pressure side |
| 3. Gasket | 6. Low pressure side |

www.cargeek.ir

 www.CarGeek.ir

2) Check each connection for fluid leakage and bleed air. Refer to “P/S System Air Bleeding Procedure: ”.
3) With engine idling, turn steering wheel and warm up engine till temperature of fluid in tank rises to 50 – 60 °C (122 – 140 °F).

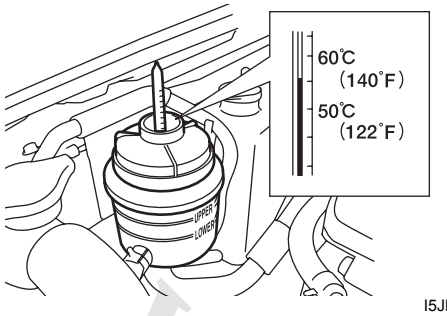

I5JB0A630005-01

4) Check back pressure by measuring hydraulic pressure with engine idling and hands off steering wheel.
When back pressure is higher than specified values, check control valve and piping for clogging.

**Back pressure**
**Lower than 1000 kPa (10 kg/cm², 142 psi)**

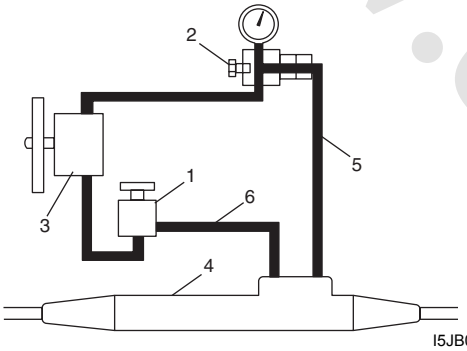

I5JB0A630008-01

| | |
|---|---|
| 1. P/S fluid reservoir | 4. P/S gear case |
| 2. Gauge valve (open) | 5. High pressure side |
| 3. P/S pump | 6. Low pressure side |

5) Check relief pressure.
   a) Increase engine speed to about 600 r/min. (rpm). Close gauge valve gradually while watching pressure increase indicated by gauge and take reading of relief pressure (maximum hydraulic pressure).
   If it is higher than specified values, possible cause is malfunction of relief valve.
   If it is lower than specified values, possible cause is either failure of P/S pump or settling of relief valve spring.

   **Relief pressure when gauge value is closed**
   **M16 Engine model: 6170 – 6870 kPa (61.7 – 68.7 kg/cm², 877 – 977 psi)**
   **J20 Engine model: 6560 – 7360 kPa (65.6 – 73.6 kg/cm², 933 – 1047 psi)**

**⚠ CAUTION**

**Be sure not to close gauge valve for longer than 10 seconds.**

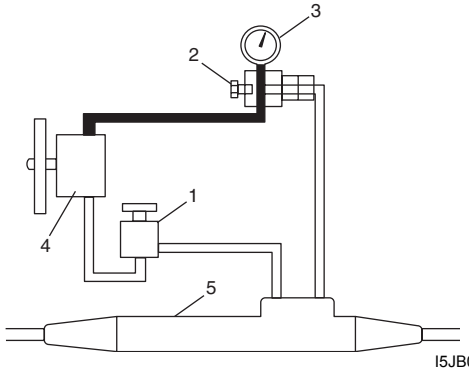

I5JB0A630009-04

| | |
|---|---|
| 1. P/S fluid reservoir | 4. P/S pump |
| 2. Gauge valve (shut) | 5. P/S gear case |
| 3. Oil pressure gauge | |

   b) Open gauge valve fully and increase engine speed to about 1500 r/min. (rpm). Then turn steering wheel to the left or right fully and take reading of relief pressure.
   If it is higher than specified values, possible cause is malfunction of relief valve.
   If it is lower than specified values, possible cause is failure in steering gear case. Replace gear case.

   **Relief pressure when gauge value is opened**
   **M16 Engine model: 6170 – 6870 kPa (61.7 – 68.7 kg/cm², 877 – 977 psi)**
   **J20 Engine model: 6560 – 7360 kPa (65.6 – 73.6 kg/cm², 933 – 1047 psi)**

**⚠ CAUTION**

**Be sure not to hold steering wheel at fully turned position for longer than 10 seconds.**

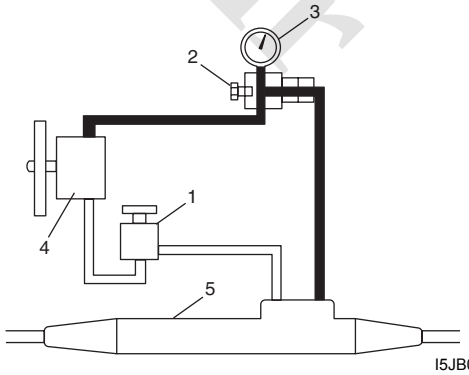

I5JB0A630010-01

| | |
|---|---|
| 1. P/S fluid reservoir | 4. P/S pump |
| 2. Gauge valve (open) | 5. P/S gear case |
| 3. Oil pressure gauge | |

www.cargeek.ir

www.CarGeek.ir


# Repair Instructions

## P/S Fluid Change

S5JB0A6306016

**⚠ CAUTION**

**Do not use any fluid other than the specified P/S fluid. Use of any fluid other than the specified P/S fluid may cause juddering or some other faulty condition to occur.**

1) Lift up vehicle.
2) Remove front under cover.
3) When engine is cool, remove P/S gear low pressure hose (1) from pipe and drain P/S fluid from low pressure hose.

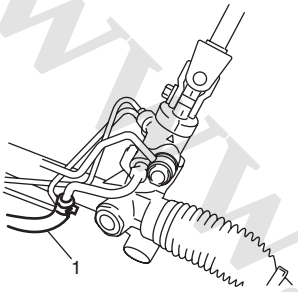


I5JB0A630011-01

4) Install low pressure hose to pipe.
5) Fill specified P/S fluid and bleed air referring to “P/S System Air Bleeding Procedure: ”.

**P/S fluid specification**
**Equivalent of DEXRON®-II**

**P/S fluid capacity reference value**
**0.7 – 0.8 liters (1.48/1.23 – 1.69/1.41 US/Imp.pt)**

## P/S Fluid Level Check

S5JB0A6306001

With engine stopped, check fluid level indicated on P/S fluid reservoir, which should be between “UPPER” and “LOWER” marks. If it is lower than “LOWER” mark, fill fluid up to “UPPER” mark.

**NOTE**

- **Be sure to use an specified power steering fluid.**
- **Fluid level should be checked when fluid is cool.**

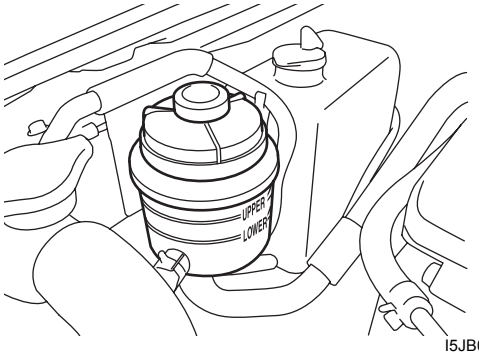


I5JB0A630012-01

www.cargeek.ir

 www.CarGeek.ir

## P/S Fluid Leakage Check

S5JB0A6306002

Start engine and turn steering wheel fully to the right and left so that maximum hydraulic pressure is provided.
Then visually check P/S gear case assembly (1), P/S pump (2) and P/S fluid reservoir (3) themselves and each joint of their connecting pipes for leakage.

**⚠ CAUTION**

**Never keep steering wheel turned fully for longer than 10 seconds.**

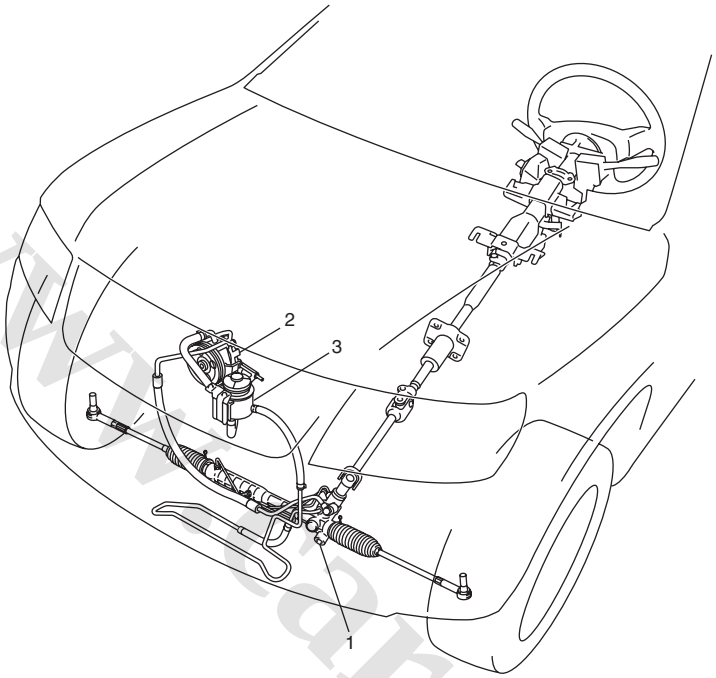


I5JB0A630001-01

## P/S System Air Bleeding Procedure

S5JB0A6306003

1) Hoist the front end of vehicle and apply safety stands.
2) Fill P/S fluid reservoir with fluid up to specified level.

**NOTE**

**Before starting engine, place transmission gear shift lever in “Neutral” (shift selector lever to “P” range for A/T model), and set parking brake.**

3) After running engine at idling speed for 3 to 5 seconds, stop it and add fluid to satisfy specification.
4) With engine stopped, turn steering wheel to the right and left as far as it stops, repeat it a few times and fill fluid to specified level.
5) With engine running at idling speed, repeat stop-to-stop turn of steering wheel till all foams in P/S fluid reservoir are gone.

**NOTE**

**Make sure to bleed air completely. If air remains in fluid, P/S pump may make humming noise or steering wheel may feel heavy.**

6) Finally check to make sure that fluid is filled to specified level.

www.cargeek.ir

## P/S Pump and A/C Compressor (If Equipped) Drive Belt Inspection and Adjustment for M16 Engine Model

S5JB0A6306004

### Inspection

- Check that belt is free from any damage and properly fitted in pulley groove.
- Check belt tension by measuring how much it deflects when pushed at intermediate point between pulleys with about 10 kg (22 lb) force.

**Deflection of P/S belt with A/C**
**(a): 9 – 10 mm (0.35 – 0.39 in.)**

**Deflection of P/S belt without A/C**
**(b): 4 – 9 mm (0.16 – 0.35 in.)**

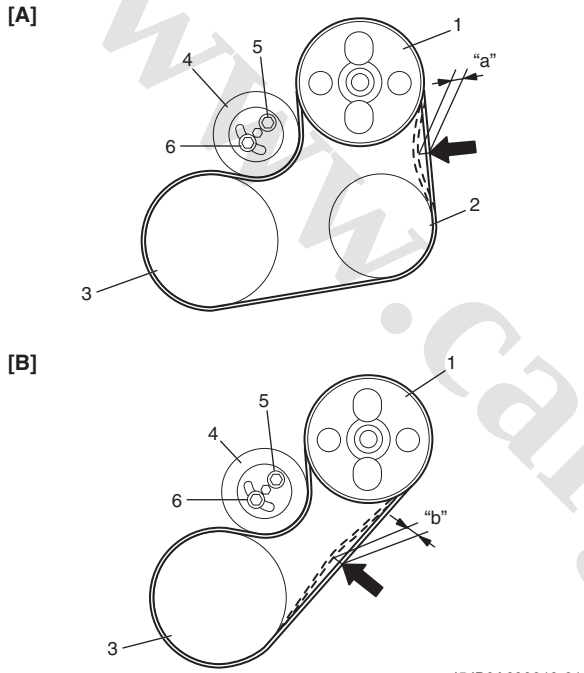


I5JB0A630013-01

| | |
|---|---|
| 1. P/S pump pulley | 5. Tension pulley bolt |
| 2. A/C compressor pulley (if equipped) | 6. Tension pulley nut |
| 3. Crankshaft pulley | [A]: with A/C |
| 4. Tension pulley | [B]: without A/C |

### Adjustment

1) To adjust P/S belt tension, loosen tension pulley bolt (2) and nut (1) and turn tension pulley (3) using hexagon wrench (4).
2) Adjust belt tension to specification, and then tighten tension pulley bolt (2) and nut (1) to specified torque.

**Tightening torque**
**P/S belt tension pulley bolt (a): 25 N·m (2.5 kgf-m, 18.5 lb-ft)**
**P/S belt tension pulley nut (b): 25 N·m (2.5 kgf-m, 18.5 lb-ft)**

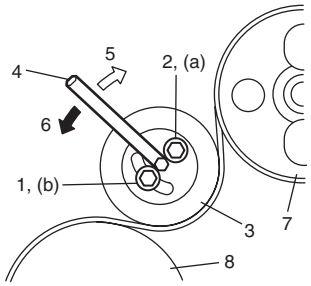


I5JB0A630014-01

| | |
|---|---|
| 5. Loose | 7. P/S pump pulley |
| 6. Tight | 8. Crank shaft pulley |

## P/S Pump and A/C Compressor (If Equipped) Drive Belt Inspection and Adjustment for J20 Engine Model

S5JB0A6306017

Refer to "Water Pump and Generator Drive Belt On-Vehicle Inspection (For J20 Engine): in Section 1J".

## P/S Pump and A/C Compressor (If Equipped) Drive Belt Removal and Installation for M16 Engine Model

S5JB0A6306018

### Removal

1) Remove tension pulley bolt (1) and nut (2).
2) Remove tension pulley (3) and P/S pump drive belt (4).

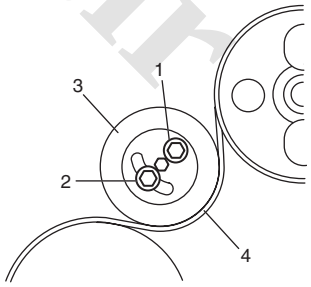


I5JB0A630015-01

### Installation

Reverse removal procedure noting the following instruction.
Adjust belt tension referring to "P/S Pump and A/C Compressor (If Equipped) Drive Belt Inspection and Adjustment for M16 Engine Model: ".

www.cargeek.ir

 www.CarGeek.ir

## P/S Pump and A/C Compressor (If Equipped) Drive Belt Removal and Installation for J20 Engine Model

S5JB0A6306019

Refer to “Water Pump and Generator Drive Belt Removal and Installation (For J20 Engine): in Section 1J”.

## Steering Rack Boot Check

S5JB0A6306005

- Check boot for crack and damage which, if any, means possibility of rusty gear, entry of dust or lack of grease. Also, check if any of such faulty conditions exists.
- Check steering rack boot for dent or breakage.
  If there is a dent, keep boot in most compressed state for some seconds to correct dent.

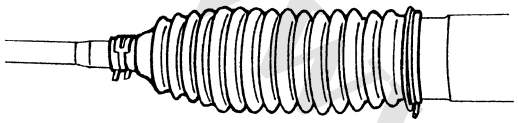

IYSQ01630013-01

## Tie-Rod End Boot Check

S5JB0A6306006

Check boot for crack and damage and if any, replace it with a new one.

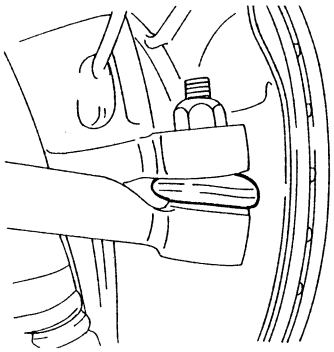

IYSQ01630014-01

## Tie-Rod End Removal and Installation

S5JB0A6306007

### Removal

1) Hoist vehicle and remove wheel.
2) Remove tie-rod end nut (3).

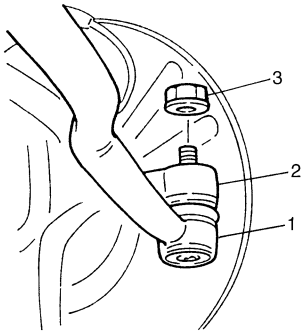


IYSQ01630015-01

| | |
|---|---|
| 1. Tie-rod end | 2. Knuckle |

3) Disconnect tie-rod end (1) by using puller (2).

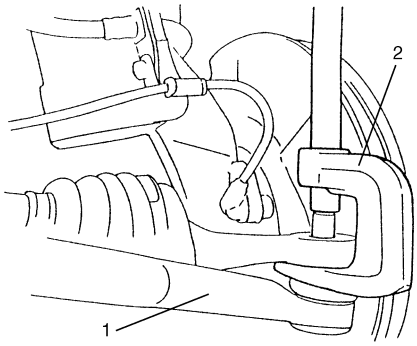


IYSQ01630016-01

4) To facilitate adjustment after installation, put a mark (2) on tie-rod thread indicating position of tie-rod end lock nut (3). Then loosen lock nut (3) and remove tie-rod end (4) from tie-rod (1).

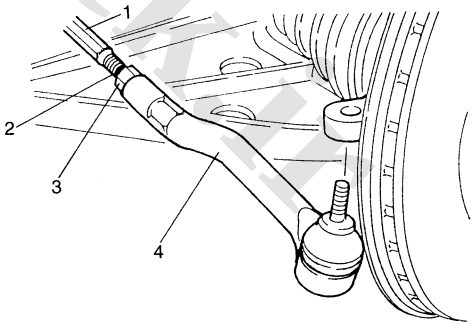


IYSQ01630017-01

www.cargeek.ir

### Installation

1) Install tie-rod end lock nut (3) and tie-rod end (4) to tie-rod (1). Tighten lock nut (3) to mark (2) on tie-rod thread.
2) Install tie-rod end (4) to knuckle (5). Tighten new tie-rod end nut (6) to specified torque.

   **Tightening torque**
   **Tie-rod end nut (a): 43 N·m (4.3 kgf-m, 31.0 lb-ft)**

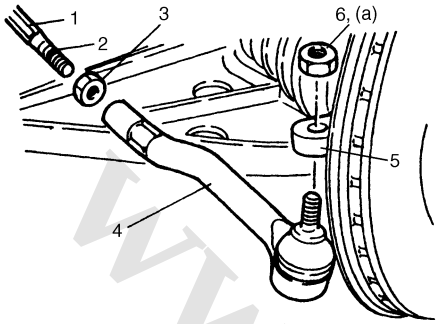

IYSQ01630018-01

3) After installing wheels, lower vehicle and tighten wheel nuts to specified torque.

   **Tightening torque**
   **Wheel nut (a): 100 N·m (10.0 kgf-m, 72.5 lb-ft)**

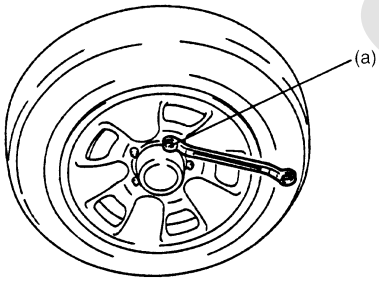

IYSQ01630019-01

4) Check that proper amount of toe-in is obtained referring to “Front Wheel Alignment Inspection and Adjustment: in Section 2B”.
5) After confirming proper amount of toe-in, tighten tie-rod end lock nut to specified torque.

   **Tightening torque**
   **Tie-rod end lock nut (a): 65 N·m (6.5 kgf-m, 47.0 lb-ft)**

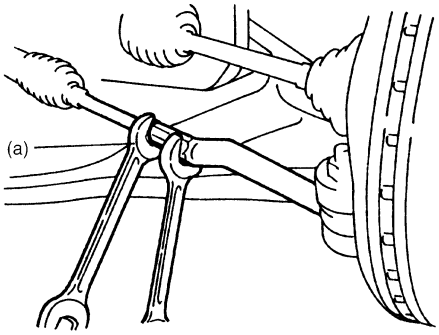

IYSQ01630020-01

## Tie-Rod End Ball Joint Inspection

S5JB0A6306008

Inspect for play in tie-rod end ball joint (1). If found defective, replace.

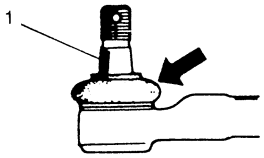

IYSQ01630021-01

www.cargeek.ir

 www.CarGeek.ir

## P/S Gear Case Assembly Components

S5JB0A6306020

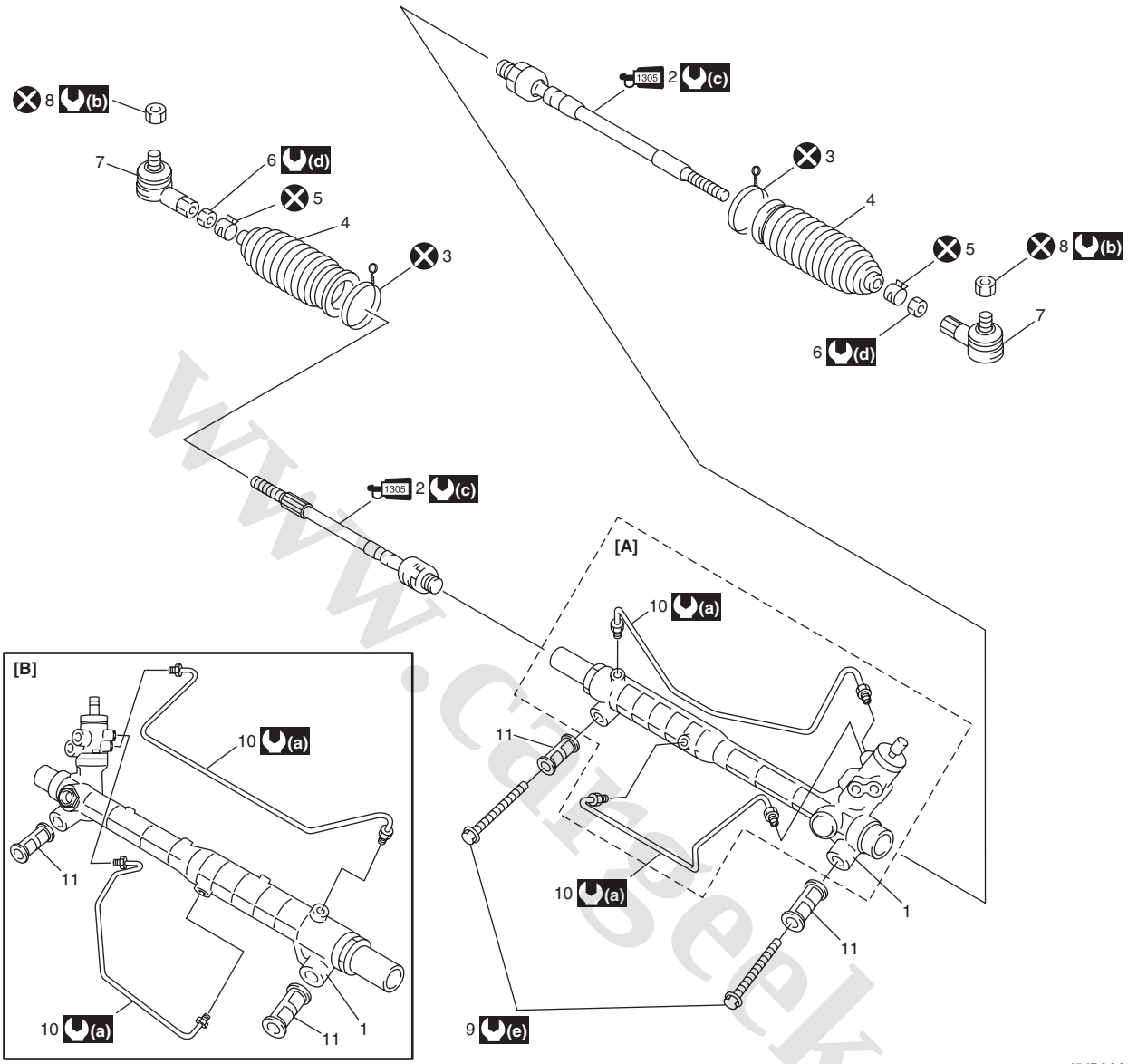


I5JB0A630016-06

| | | |
|---|---|---|
| [A]: LH steering vehicle | 6. Tie-rod end lock nut | (b) : 43 N·m (4.3 kgf-m, 31.0 lb-ft) |
| [B]: RH steering vehicle | 7. Tie-rod end | (c) : 90 N·m (9.0 kgf-m, 65.0 lb-ft) |
| 1. Steering gear case | 8. Tie-rod end nut | (d) : 65 N·m (6.5 kgf-m, 47.0 lb-ft) |
| 1305 2. Tie-rod<br>: Apply thread rock cement 99000-32100 to thread of tie-rod boll nut. | 9. Steering gear case mounting bolt | (e) : 105 N·m (10.5 kgf-m, 76.0 lb-ft) |
| 3. Band | 10. Gear case cylinder pipe | ⊗ : Do not reuse. |
| 4. Boot | 11. Steering gear case mount bushing | |
| 5. Rack boot clip | (a) : 25 N·m (2.5 kgf-m, 18.5 lb-ft) | |

www.cargeek.ir

## P/S Gear Case Assembly Removal and Installation

S5JB0A6306009

**⚠ CAUTION**

**Never disassemble P/S gear case assembly. Disassembling will adversely affect original performance of P/S gear case assembly.**

### Removal

1) Disconnect negative (–) cable at battery.
2) Take out P/S fluid in reservoir with syringe or such.
3) Hoist vehicle and remove both right and left wheels.
4) Disconnect both right and left tie-rod ends from knuckle referring to Step 2) to 3) of “Removal” in “Tie-Rod End Removal and Installation: ”.
5) Disconnect steering lower shaft assembly (1) from pinion shaft of P/S gear case assembly (2) referring to Step 5) of “Removal” in “Steering Lower Shaft Assembly Removal and Installation: in Section 6B”.
6) Disconnect high pressure pipe (3) from P/S gear case assembly.
7) Disconnect low pressure pipe (4) from P/S gear case assembly.
8) Remove P/S gear case cylinder pipes (5) from P/S gear case assembly.

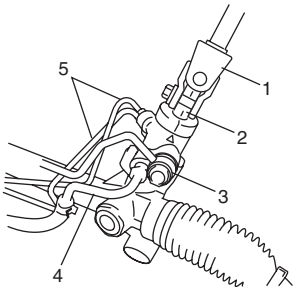


I5JB0A630017-01

9) Remove stabilizer bar mount bolt and stabilizer joint.

**NOTE**

**Do not remove stabilizer bar from vehicle.**

10) Remove stabilizer bar mount bracket (2) from left side of front suspension frame.

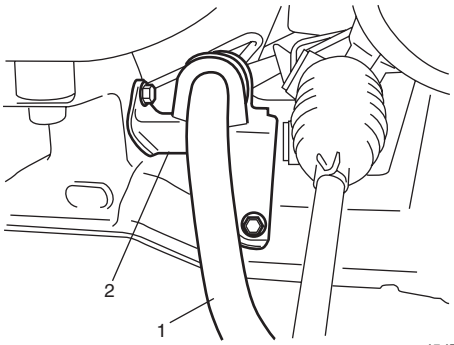


I5JB0A630018-01

11) Remove bolts (1) and then take off P/S gear case assembly from left side of vehicle.

**NOTE**

**P/S gear case assembly cannot be removed from the right side of vehicle.**

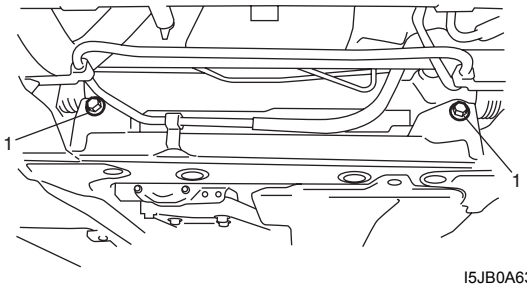


I5JB0A630019-01

### Installation

Reverse removal procedure for installation of P/S gear case, noting the following points.

- After confirming that front tire is in straight position, install P/S gear case to body temporarily. Next, with tie-rod end installed to knuckle, set rack in position close to neutral. Then obtain the neutral state by aligning match marks (1) on pinion shaft and steering gear case (2) and insert steering lower joint into pinion shaft.
  Refer to Step 3) of “Installation” in “Steering Lower Shaft Assembly Removal and Installation: in Section 6B”.

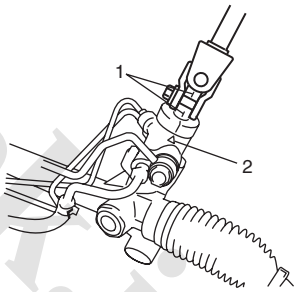


I5JB0A630020-01

**⚠ CAUTION**

**Be sure to confirm that steering wheel and front tires (wheels) are in straight position when inserting steering lower joint into steering pinion shaft.**

- If a plug was put to disconnected pipe when removing steering gear case, remove that plug before reconnecting pipe.
- Use specified torque as given below.

www.cargeek.ir

 www.CarGeek.ir

**Tightening torque**
**Steering lower shaft bolt: 25 N·m (2.5 kgf-m, 18.5 lb-ft)**
**Gear case high pressure pipe union bolt: 35 N·m (3.5 kgf-m, 25.5 lb-ft)**
**Gear case cylinder pipe flare nut: 25 N·m (2.5 kgf-m, 18.0 lb-ft)**
**Gear case mounting bolt: 105 N·m (10.5 kgf-m, 76 lb-ft)**
**Gear case low pressure pipe union bolt: 40 N·m ( 4.0 kgf-m, 29.0 lb-ft)**
**Stabilizer bar mount bracket mount bolt (a): 60 N·m (6.0 kgf-m, 43.0 lb-ft)**

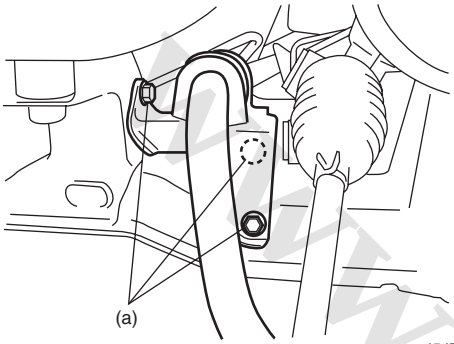

I5JB0A630021-02

- After installation, be sure to fill specified P/S fluid and bleed air. Refer to “P/S System Air Bleeding Procedure: ”.
- Check toe setting. Adjust as required. Refer to “Front Wheel Alignment Inspection and Adjustment: in Section 2B”.

## Steering Gear Case Mount Bushing Removal and Installation

S5JB0A6306024

### Removal

1) Remove P/S gear case assembly referring to “P/S Gear Case Assembly Removal and Installation: ”.
2) Push out bushing using hydraulic press (1) and special tools.

**Special tool**
**(A): 09943–88211**
**(B): 09945–55410**

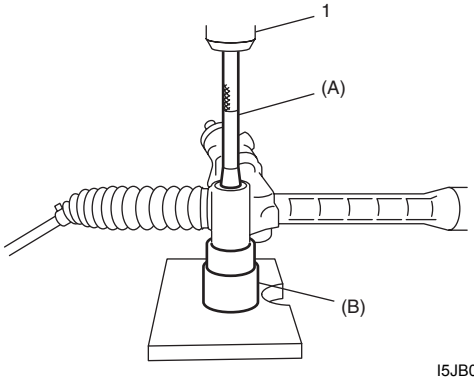

I5JB0A630053-02

### Installation

**⚠ CAUTION**

**Be sure to use new bushing.**

1) Press-fit bushing (1) using special tools and press (2).

**Special tool**
**(A): 09913–75821**
**(B): 09945–55410**

**NOTE**

**Before installing bushing, apply soap water on its circumference to facilitate installation.**

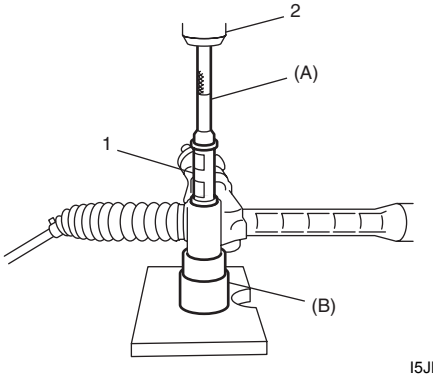

I5JB0A630055-01

2) Press-fit bushing (1) so that dimensions and in figure become equal.

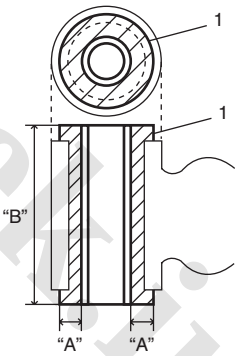

I5JB0A630056-01

| | |
|---|---|
| “A”: 6 mm (0.24 in.) | “B”: 80 mm (3.15 in.) |

3) Install P/S gear case assembly referring to “P/S Gear Case Assembly Removal and Installation: ”.

## Steering Gear Case Mount Bushing Inspection

S5JB0A6306025

Inspect for looseness, cracks, deformation or damage. Replace any defective part.

www.cargeek.ir

www.CarGeek.ir


## Rack Boot / Tie-Rod Removal and Installation

S5JB0A6306010

### Removal

1) Remove P/S gear case assembly, referring to “P/S Gear Case Assembly Removal and Installation: ”.
2) For ease of adjustment after installation, make marking (4) of tie-rod end lock nut position of tie-rod thread.
3) Loosen tie-rod end lock nut (2) and remove tie-rod end.
4) Remove boot wire and clip.
5) Remove boot (3) from tie-rod (1).

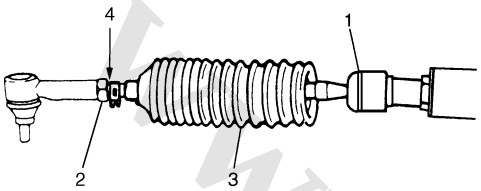


I5JB0A630054-01

6) Remove tie-rod (1) from steering gear case (2).

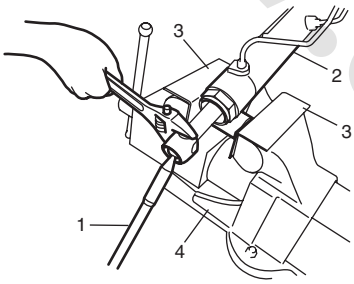


I5JB0A630022-01

| | |
|---|---|
| 3. Aluminium plate | 4. Vise |

### Installation

1) Clean threads of both tie-rod and steering gear case (2).
2) Apply thread lock cement to thread of tie-rod ball nut (1) and then tighten it to specified torque.

   **“B”: Thread lock cement 99000–32100 (Thread Lock Cement 1305)**

   **Tightening torque**
   **Tie-rod ball nut (a): 90 N·m (9.0 kgf-m, 65.0 lb-ft)**

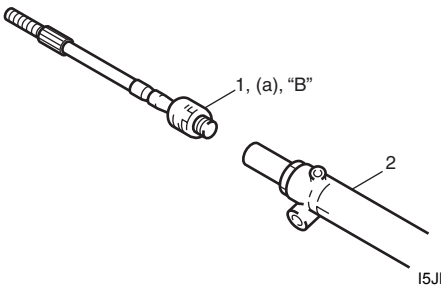


I5JB0A630023-03

3) Apply grease to boot inside “A” indicated in the figure.

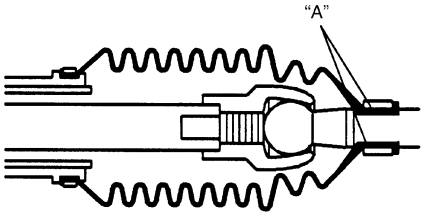


IYSQ01630030-01

4) Position boot properly in grooves of gear case and tie-rod. Check to ensure that boot is free from twist and dent.
5) Clamp boot with clip and wire. Wire should be new and should go around the boot twice.
   Pull its both ends together by screwdriver or such and make sure that the wire won’t be crossed. Then twist the ends several times, the twisted ends should be bent in the circumferential direction.

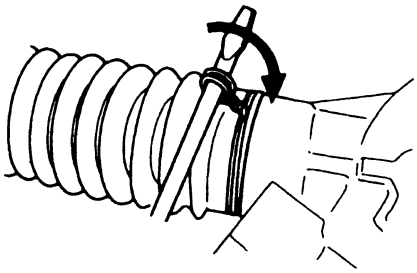

IYSQ01630035-01

6) Install tie-rod end lock nut and tie-rod end to tie-rod. Position lock nut to marking (1) made in removal.

**NOTE**

**When tie-rod was replaced, measure length “a” on removed tie-rod and use it on new replacement tie-rod so as to position lock nut properly.**

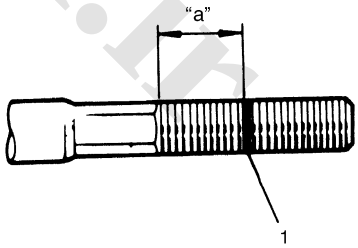


I5JB0A630058-01

7) Install steering gear case. Refer to “P/S Gear Case Assembly Removal and Installation: ”.

www.cargeek.ir

 www.CarGeek.ir

## P/S Hose / Pipe Components

S5JB0A6306011

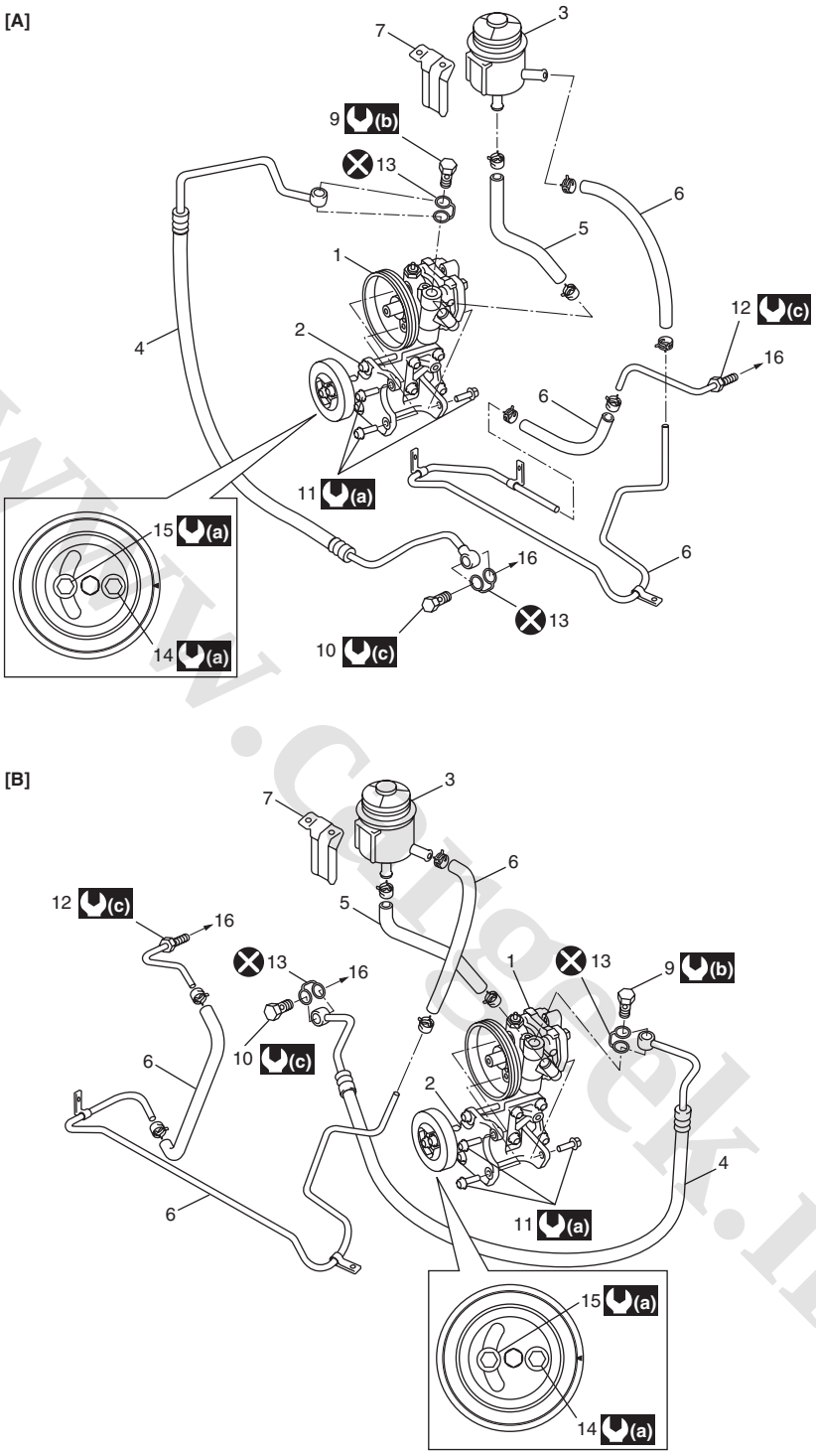


I5JB0A630024-04

www.cargeek.ir

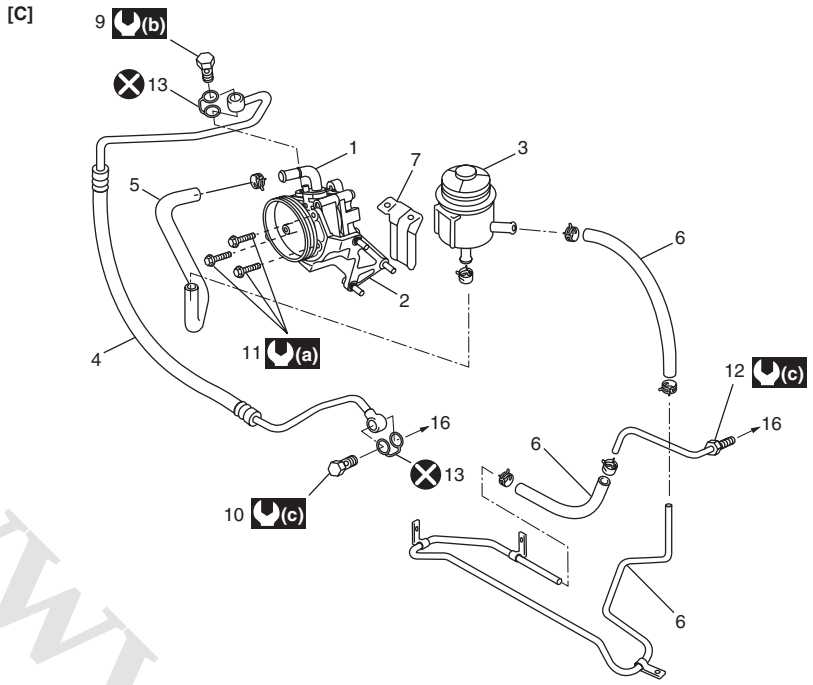


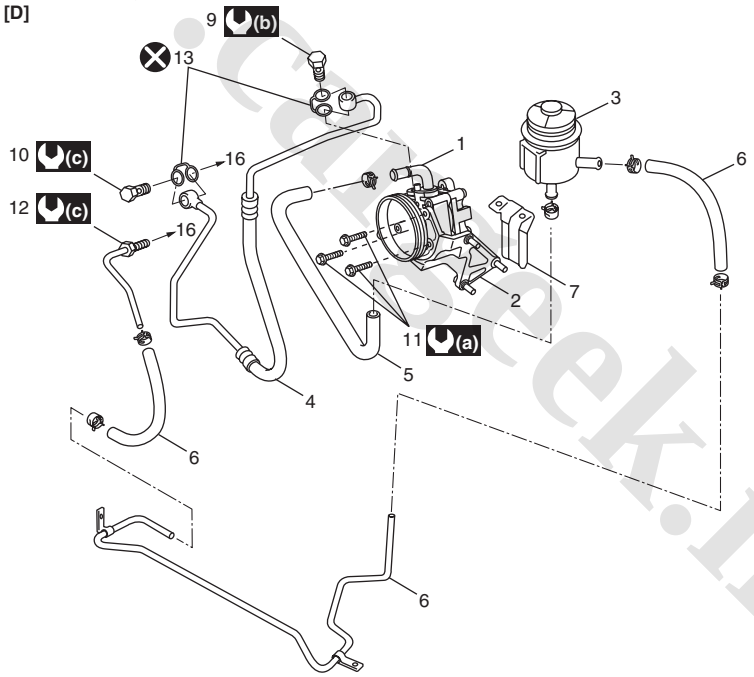


I5JB0A630025-04

| | | |
|---|---|---|
| [A]: M16 engine LH steering vehicle | 5. Suction hose | 13. Washer |
| [B]: M16 engine RH steering vehicle | 6. Low pressure return hose | 14. P/S belt tension pulley bolt |
| [C]: J20 engine LH steering vehicle | 7. P/S fluid reservoir bracket | 15. P/S belt tension pulley nut |
| [D]: J20 engine RH steering vehicle | 8. To P/S gear case | 16. To P/S gear case assembly |
| 1. P/S pump assembly | 9. P/S pump union bolt | (a) : 25 N·m (2.5 kgf-m, 18.0 lb-ft) |
| 2. Bracket | 10. P/S gear case high pressure union bolt | (b) : 60 N·m (6.0 kgf-m, 43.5 lb-ft) |
| 3. P/S fluid reservoir | 11. P/S pump mounting bolt | (c) : 35 N·m (3.5 kgf-m, 25.5 lb-ft) |
| 4. High pressure hose and pipe | 12. P/S gear case low pressure flare nut | ⊗ : Do not reuse. |

www.cargeek.ir

 www.CarGeek.ir

## P/S Pump Removal and Installation for M16 Engine Model

S5JB0A6306012

### Removal

**NOTE**

**Be sure to clean each joint of suction and discharge sides thoroughly before removal.**

1) Disconnect negative (–) cable at battery.
2) Take out P/S fluid in reservoir with syringe or such.
3) Disconnect high pressure pipe and suction hose from P/S pump.

**NOTE**

**As fluid flows out of disconnected joints, put a receptacle under joints or a plug to pipe.**

4) Disconnect pressure switch lead wire at switch terminal.
5) Remove P/S drive belt referring to “P/S Pump and A/C Compressor (If Equipped) Drive Belt Removal and Installation for M16 Engine Model: ”.
6) Remove P/S pump mounting bolts (1).
7) Remove P/S pump (2).

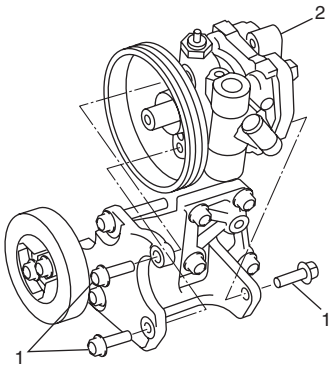


I5JB0A630026-01

**NOTE**

**Plug each port of removed pump to prevent dust or any other foreign matter from entering.**

### Installation

Reverse removal procedure, and then noting the following instructions.

**NOTE**

- **Adjust P/S pump drive belt referring to “P/S Pump and A/C Compressor (If Equipped) Drive Belt Inspection and Adjustment for M16 Engine Model: ”.**
- **Fill specified power steering fluid after installation and bleed air without failure. (Refer to “P/S System Air Bleeding Procedure: ”.)**

**Tightening torque**
**P/S pump mounting bolt: 25 N·m (2.5 kgf-m, 18.0 lb-ft)**
**High pressure pipe union bolt: 60 N·m (6.0 kgf-m, 43.5 lb-ft)**

## P/S Pump Removal and Installation for J20 Engine Model

S5JB0A6306021

### Removal

**⚠ CAUTION**

**Never disassemble P/S pump for J20 engine model. Disassembly will spoil its original performance. If faulty condition is found, replace it with new one.**

**NOTE**

**Be sure to clean each joint of suction and discharge sides thoroughly before removal.**

1) Disconnect negative (–) cable at battery.
2) Take out P/S fluid in reservoir with syringe or such.
3) Remove intake manifold referring to “Intake Manifold Removal and Installation: For J20 Engine in Section 1D”.
4) Disconnect high pressure pipe (1) and suction hose (2) from power steering pump (3).

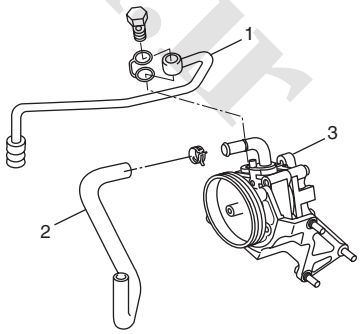


I5JB0A630027-01

**NOTE**

**As fluid flows out of disconnected joints, put a receptacle under joints or a plug to pipe.**

5) Disconnect pressure switch lead wire at switch terminal.

www.cargeek.ir

6) Remove water pump and generator drive belt referring to “Water Pump and Generator Drive Belt Removal and Installation (For J20 Engine): in Section 1J”.
7) Remove P/S pump mounting bolts (1) and then remove P/S pump.

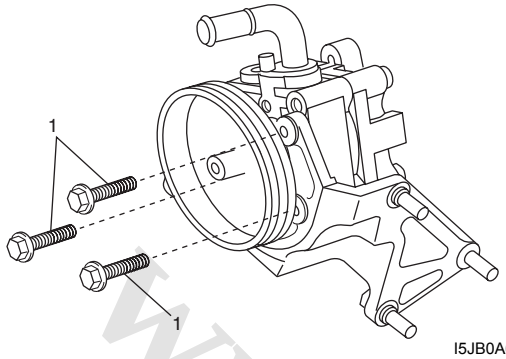


I5JB0A630028-02

**NOTE**

**Plug each port of removed pump to prevent dust or any other foreign matter from entering.**

**Installation**

Reverse removal procedure, and then nothing the following instructions.

**NOTE**

**Fill specified power steering fluid after installation and bleed air without failure referring to “P/S System Air Bleeding Procedure: ”.**

**Tightening torque**

**P/S pump mounting bolt: 25 N·m (2.5 kgf-m, 18.0 lb-ft)**

**High pressure pipe union bolt: 60 N·m (6.0 kgf-m, 43.5 lb-ft)**

## P/S Pump Components for M16 Engine Model

S5JB0A6306015

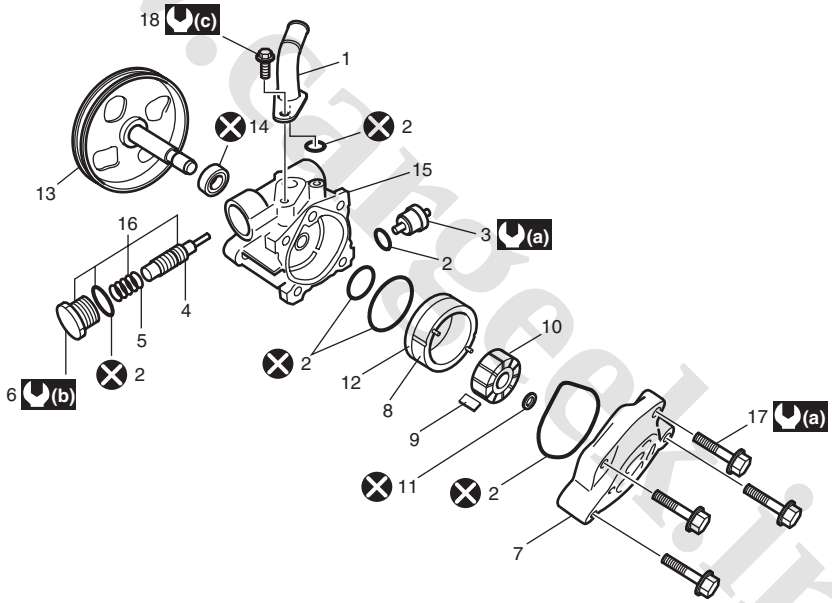


I5JB0A630003-01

| | | |
|---|---|---|
| 1. Suction connector | 9. Vane | 17. Cover bolt |
| 2. O-ring | 10. Rotor | 18. Suction connector bolt |
| 3. Pressure switch | 11. Snap ring | (a) : 28 N·m (2.8 kgf-m, 20.5 lb-ft) |
| 4. Flow control valve (Relief valve) | 12. Side plate | (b) : 60 N·m (6.0 kgf-m, 43.5 lb-ft) |
| 5. Spring | 13. Pulley (pump shaft) | (c) : 12 N·m (1.2 kgf-m, 9.0 lb-ft) |
| 6. Plug | 14. Oil seal | ⊗ : Do not reuse. |
| 7. Pump cover | 15. Pump body | |
| 8. Cam ring | 16. Flow control valve assembly | |

www.cargeek.ir

 www.CarGeek.ir

## P/S Pump Assembly Components for J20 Engine Model

S5JB0A6306022

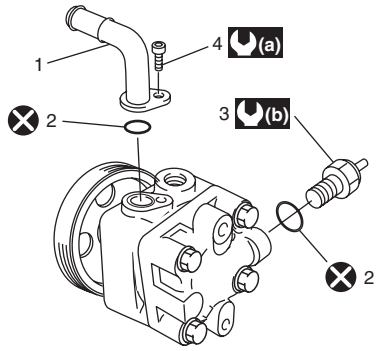


I5JB0A630029-03

| | |
|---|---|
| 1. Suction connector | (a) : 3.7 N·m (0.37 kgf-m, 2.7 lb-ft) |
| 2. O-ring | (b) : 20 N·m (2.0 kgf-m, 14.5 lb-ft) |
| 3. Pressure switch | ⊗ : Do not reuse. |
| 4. Suction connector bolt | |

## P/S Pump Disassembly and Assembly for M16 Engine Model

S5JB0A6306013

### Disassembly

1) Clean its exterior thoroughly.
2) With aluminum plates placed on vise first, grip pump body (15) with it.
3) Remove suction connector bolt, suction connector (1) and O-ring (2) from pump body (15).
4) Remove power steering pressure switch (terminal set) (3) from pump body (15).
5) Remove plug (6), flow control spring (5) and relief valve (flow control valve) (4) from pump body (15).
6) Remove cover bolts, pump cover (7) and O-ring (2) from pump body (15).
7) Remove snap ring (11) from pump shaft (13).
8) Remove vanes (9) from rotor (10).
9) Remove cam ring (8), rotor (10), side plate (12) and O-rings (2) from pump body (15).
10) Pull out pulley (13) from pump body (15).
11) Remove oil seal (14) from pump body (15).

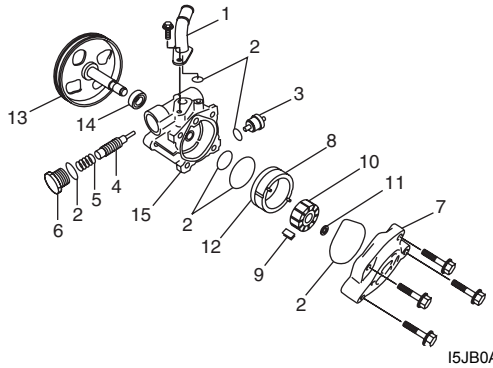


I5JB0A630030-02

### Assembly

1) Apply grease to oil seal (1) lip and apply P/S fluid to sliding surface of the shaft (2) then insert pulley's shaft (2) from oil seal side of the pump body.

**"A": Grease 99000–25010 (SUZUKI Super Grease A)**

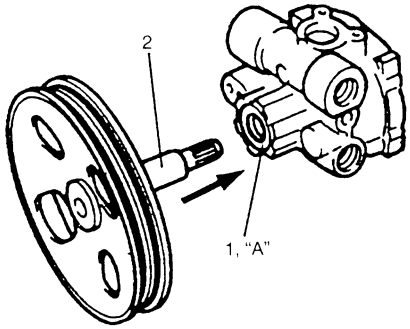


IYSQ01630041-01

2) Apply power steering fluid to O-rings (1) and fit them to pump body.

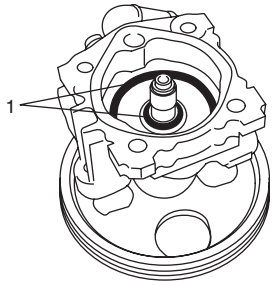


I5JB0A630031-01

3) Install side plate and cam ring and side plate (1) to pump body.

**NOTE**

**Carefully align the dowel pins on the cam ring and side plate (1) at bolt hole (2) as shown in the figure.**

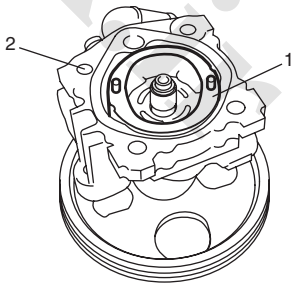


I5JB0A630032-01

www.cargeek.ir

4) Apply power steering fluid to sliding surface of rotor (1).
5) Install rotor (1) to shaft, directing dot (3) marked side of rotor facing up.
6) Install new snap ring (2) to shaft, then make sure to fit snap into shaft groove securely.

**NOTE**

**Never reuse the removed snap ring (2).**

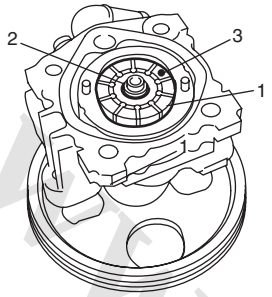


I5JB0A630033-01

7) Apply power steering fluid to sliding surface of cam ring (1).
8) Apply power steering fluid to each vane (2).
9) Install vanes (2) (10 pieces) to rotor (1).

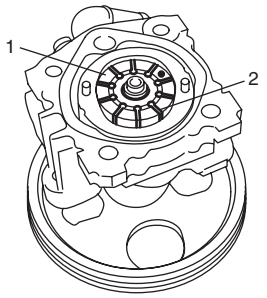


I5JB0A630034-01

10) Apply power steering fluid to O-ring (1).
11) Install O-ring (1) to pump body.

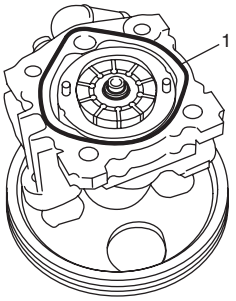


I5JB0A630035-01

12) Apply power steering fluid to sliding surface of pump cover and rotor.
13) Match the dowel pins (1) to the holes of the cover plate (2) as shown and install pump cover to pump body.

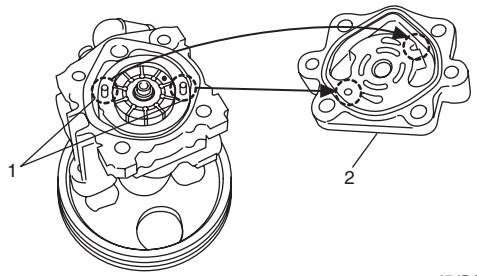


I5JB0A630036-01

14) Gradually tighten pump cover (1) bolts to diagonally specified torque.

**NOTE**

**After installing pump cover (1), check to make sure that shaft can be turned by hand.**

**Tightening torque**
**P/S pump cover bolt (a): 28 N·m (2.8 kgf-m, 20.5 lb-ft)**

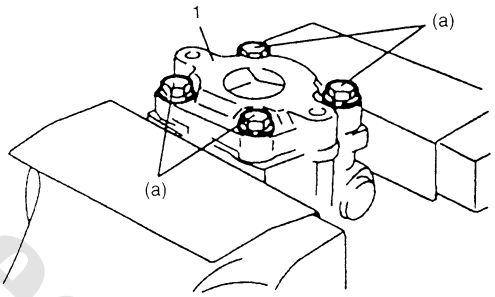


IYSQ01630049-01

15) Apply power steering fluid to O-ring (2) of pressure switch.
16) Install O-ring (2) to pressure switch.
17) Install pressure switch (1) to pump body.

**Tightening torque**
**Pressure switch for M16 engine model (a): 28 N·m (2.8 kgf-m, 20.5 lb-ft)**

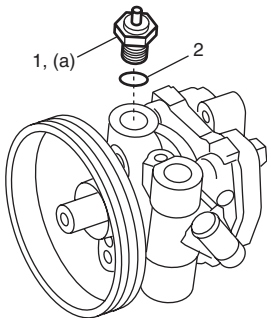


I5JB0A630037-04

www.cargeek.ir

 www.CarGeek.ir

18) Apply power steering fluid to relief valve (flow control valve).
19) Install relief valve (flow control valve) to pump body.
20) Install flow control spring.
21) Apply power steering fluid to O-rings of plug.
22) Install O-rings to plug.
23) Tighten plug to specified torque.

**Tightening torque**
**Plug (a): 60 N·m (6.0 kgf-m, 43.5 lb-ft)**

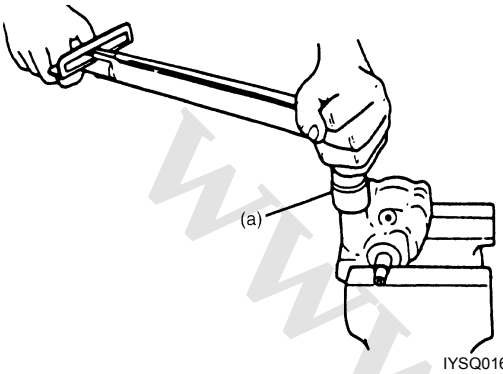


IYSQ01630051-01

24) Apply power steering fluid to O-ring (2) of suction connector (1).
25) Install O-ring (2) to suction connector (1).

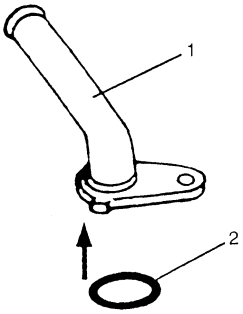


IYSQ01630052-01

26) Install suction connector (1) to pump body as shown in the figure.
Tighten suction connector (1) bolts to specified torque.

**Tightening torque**
**Suction connector bolt for M16 engine model**
**(a): 12 N·m (1.2 kgf-m, 9.0 lb-ft)**

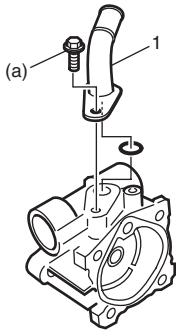


I5JB0A630038-02

## P/S Pump Inspection for M16 Engine Model

S5JB0A6306014

**Pump Body, Cover, Side Plate and Shaft**
Check sliding surfaces of each part for wear and damage. If any defect is found, replace pump assembly.

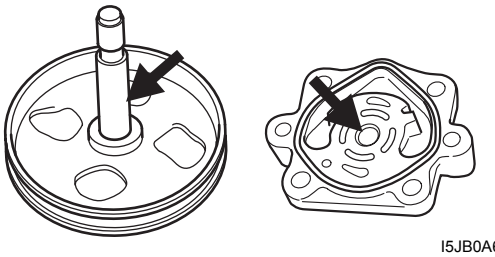

I5JB0A630051-01

**Cam Ring**
Check vane sliding surface of cam ring for wear and damage. If any defect is found, replace pump assembly.

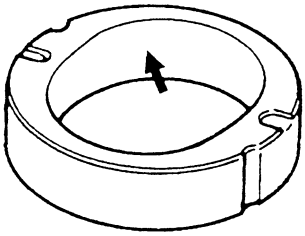

IYSQ01630055-01

**Rotor and Vane**

- Check sliding surfaces of rotor and vane for wear and damage.

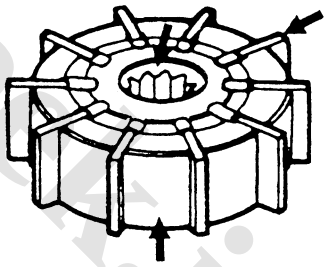

IYSQ01630056-01

- Check clearance between rotor and vane. Replace pump assembly if any defect is found.

**Clearance between rotor and vane**
**Standard: 0.015 mm (0.0006 in.)**
**Limit: 0.027 mm (0.0011 in.)**

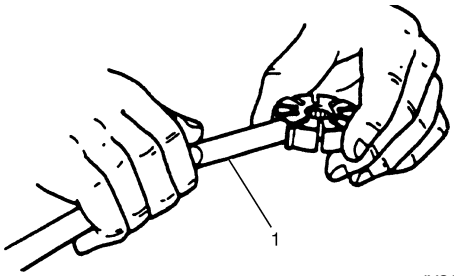


IYSQ01630057-01

1. Thickness gauge

www.cargeek.ir

**Relief Valve (Flow Control Valve) and Its Spring**

- Check fluid passage of relief valve and orifice of connector for obstruction (clogged).
- Check sliding surface of relief valve for wear and damage.

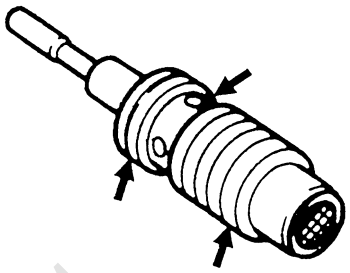

IYSQ01630058-01

- Check free length of relief valve spring (1). Replace if any defective is found.

  **Free length of relief valve spring**
  **Standard: 22.0 mm (0.866 in.)**
  **Limit: 19.0 mm (0.748 in.)**

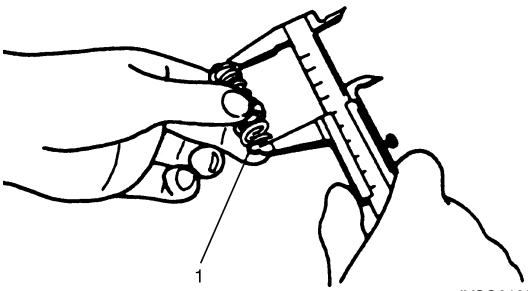


IYSQ01630059-01

## P/S Pump Inspection for J20 Engine Model

S5JB0A6306026

Check P/S pump as follows.

- Damage of pump body.
- Oil leakage from pump body.
- Wear and damage of pulley.
- Abnormal noise when pulley is turned by hand.

If abnormality is found, replace P/S pump with new one.

# Specifications

## Tightening Torque Specifications

S5JB0A6307001

| Fastening part | Tightening torque | | | Note |
|---|---|---|---|---|
| | N·m | kgf-m | lb-ft | |
| P/S belt tension pulley bolt | 25 | 2.5 | 18.5 | ☞ |
| P/S belt tension pulley nut | 25 | 2.5 | 18.5 | ☞ |
| Tie-rod end nut | 43 | 4.3 | 31.0 | ☞ |
| Wheel nut | 100 | 10.0 | 72.5 | ☞ |
| Tie-rod end lock nut | 65 | 6.5 | 47.0 | ☞ |
| Steering lower shaft bolt | 25 | 2.5 | 18.5 | ☞ |
| Gear case high pressure pipe union bolt | 35 | 3.5 | 25.5 | ☞ |
| Gear case cylinder pipe flare nut | 25 | 2.5 | 18.0 | ☞ |
| Gear case mounting bolt | 105 | 10.5 | 76 | ☞ |
| Gear case low pressure pipe union bolt | 40 | 4.0 | 29.0 | ☞ |
| Stabilizer bar mount bracket mount bolt | 60 | 6.0 | 43.0 | ☞ |
| Tie-rod ball nut | 90 | 9.0 | 65.0 | ☞ |
| P/S pump mounting bolt | 25 | 2.5 | 18.0 | ☞ / ☞ |
| High pressure pipe union bolt | 60 | 6.0 | 43.5 | ☞ / ☞ |
| P/S pump cover bolt | 28 | 2.8 | 20.5 | ☞ |
| Pressure switch for M16 engine model | 28 | 2.8 | 20.5 | ☞ |
| Plug | 60 | 6.0 | 43.5 | ☞ |
| Suction connector bolt for M16 engine model | 12 | 1.2 | 9.0 | ☞ |

**NOTE**

**The specified tightening torque is also described in the following.**
**“P/S Gear Case Assembly Components: ”**
**“P/S Hose / Pipe Components: ”**
**“P/S Pump Components for M16 Engine Model: ”**
**“P/S Pump Assembly Components for J20 Engine Model: ”**

**Reference:**
For the tightening torque of fastener not specified in this section, refer to “Fastener Information: in Section 0A”.

www.cargeek.ir

 www.CarGeek.ir

# Special Tools and Equipment

## Recommended Service Material

S5JB0A6308001

| Material | SUZUKI recommended product or Specification | | Note |
|---|---|---|---|
| Grease | SUZUKI Super Grease A | P/No.: 99000–25010 | ☞ |
| Thread lock cement | Thread Lock Cement 1305 | P/No.: 99000–32100 | ☞ |

**NOTE**

**Required service material is also described in the following.**
**“P/S Gear Case Assembly Components: ”**

## Special Tool

S5JB0A6308002

| | |
|---|---|
| 09913–75821<br>Bearing installer attachment<br>☞ 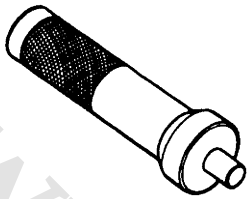 | 09915–77412<br>Oil pressure gauge<br>☞ 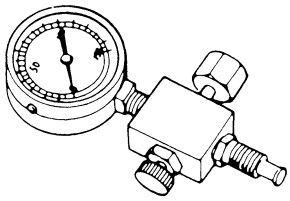 |
| 09915–77420<br>Oil pressure gauge attachment and hose set<br>☞ 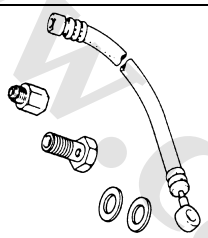 | 09943–88211<br>Pinion bearing installer<br>☞ 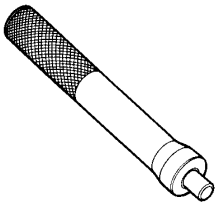 |
| 09945–55410<br>Bushing installer<br>☞ / ☞ 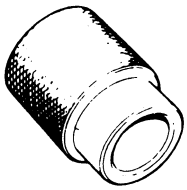 | |

www.cargeek.ir

www.cargeek.ir

www.CarGeek.ir


# Section 7

# HVAC

## CONTENTS


**Precautions ..... 7-1**
**Precautions ..... 7-1**
Precautions for HVAC ..... 7-1

**Heater and Ventilation ..... 7A-1**
**General Description ..... 7A-1**
Heater and Ventilation Construction ..... 7A-1
Body Ventilation Construction ..... 7A-2
On-Board Diagnostic System Description (for Vehicle without A/C) ..... 7A-2
HVAC Control System Description (for Vehicle without A/C) ..... 7A-3
**Schematic and Routing Diagram ..... 7A-3**
Heater and Ventilation Wiring Circuit Diagram ..... 7A-3
Electronic Control Input / Output Table (for Vehicle without A/C) ..... 7A-3
Electronic Components Location for Heater (for Vehicle without A/C) ..... 7A-4
**Diagnostic Information and Procedures ..... 7A-5**
Heater and Ventilation System Check ..... 7A-5
Visual Inspection ..... 7A-7
DTC Check ..... 7A-7
DTC Clearance ..... 7A-7
DTC Table ..... 7A-7
Fail-Safe Table ..... 7A-7
Scan Tool Data ..... 7A-7
Heater and Ventilation Symptom Diagnosis ..... 7A-8
**Repair Instructions ..... 7A-9**
Blower Unit and Heater Unit Components ..... 7A-9
HVAC Unit Removal and Installation (for Vehicle without A/C) ..... 7A-9
HVAC Air Filter Removal and Installation (for Vehicle without A/C) ..... 7A-9
HVAC Air Filter Inspection (for Vehicle without A/C) ..... 7A-9
Blower Motor Removal and Installation ..... 7A-9
Blower Motor Inspection ..... 7A-9
Blower Motor Controller Removal and Installation ..... 7A-10
Blower Motor Controller Inspection ..... 7A-10
Blower Motor Relay Inspection ..... 7A-10
Heater Core Removal and Installation ..... 7A-11
HVAC Control Module Removal and Installation ..... 7A-11
HVAC Control Module and Its Circuits Inspection (for Vehicle without A/C) ..... 7A-11
Air Flow Control Actuator Removal and Installation ..... 7A-11
Air Flow Control Actuator Inspection ..... 7A-11
Temperature Control Actuator Removal and Installation ..... 7A-12
Temperature Control Actuator Inspection ..... 7A-12
Air Intake Control Actuator Removal and Installation ..... 7A-13
Air Intake Control Actuator Inspection ..... 7A-13
Actuator Linkage Inspection ..... 7A-13
Center Ventilation Louver Removal and Installation ..... 7A-14
Side Ventilation Louver Removal and Installation ..... 7A-14
Rear Duct Components ..... 7A-15
Rear Duct Removal and Installation ..... 7A-15

**Air Conditioning System ..... 7B-1**
**Precautions ..... 7B-1**
A/C System Caution ..... 7B-1
Precautions on Servicing A/C System ..... 7B-1
Precautions in Diagnosing Trouble ..... 7B-1
Precautions on Handling Refrigerant HFC-134a (R-134a) ..... 7B-1
Precautions on Servicing Refrigerant Line ..... 7B-2
Precautions on Refrigerant Recovery ..... 7B-3
Precautions on Refrigerant Charge ..... 7B-3
Precautions on Replenishing Compressor Oil ..... 7B-3
Precautions on Servicing Compressor Assembly ..... 7B-4
**General Description ..... 7B-4**
AUTO A/C System Description ..... 7B-4
HVAC Control System Description ..... 7B-4
Auto A/C Electronic Control Input / Output Table ..... 7B-5
HVAC Control Module Operation Description ..... 7B-5
A/C Refrigerant Type Description ..... 7B-5
Sub-Cool A/C System Description ..... 7B-6
A/C Evaporator Temperature Sensor Description ..... 7B-7
On-Board Diagnostic System Description ..... 7B-7
**Schematic and Routing Diagram ..... 7B-8**
A/C System Wiring Circuit Diagram ..... 7B-8
**Component Location ..... 7B-9**
Major Components of A/C System ..... 7B-9
A/C Control System Components Location ..... 7B-10




www.cargeek.ir

www.CarGeek.ir

**Diagnostic Information and Procedures.....7B-11**
Air Conditioning System Check.....7B-11
DTC Check.....7B-13
DTC Clearance.....7B-14
DTC Table.....7B-14
Fail-Safe Table.....7B-17
Scan Tool Data.....7B-18
Visual Inspection.....7B-20
A/C System Performance Inspection.....7B-20
A/C System Symptom Diagnosis.....7B-26
Abnormal Noise Diagnosis.....7B-28
Abnormal Noise Symptom Diagnosis of A/C System.....7B-28
DTC B1502: Inside Air Temperature Sensor and/or Its Circuit Malfunction.....7B-30
DTC B1503: A/C Evaporator Air Temperature Sensor and/or Its Circuit Malfunction.....7B-31
DTC B1504: Sunload Sensor and/or Its Circuit Malfunction.....7B-33
DTC B1511: Temperature Control Actuator (Position Sensor) and/or Its Circuit Malfunction.....7B-34
DTC B1512: Air Flow Control Actuator (Position Sensor) and/or Its Circuit Malfunction.....7B-37
DTC B1513: Temperature Control Actuator and/or Its Circuit Malfunction.....7B-39
DTC B1514: Air Flow Control Actuator and/or Its Circuit Malfunction.....7B-42
DTC B1520: Temperature Selector and/or Its Circuit Malfunction.....7B-44
DTC B1521: Blower Speed Selector and/or Its Circuit Malfunction.....7B-45
DTC B1530: Air Intake Control Actuator (Position Sensor) and/or Its Circuit Malfunction.....7B-45
DTC B1531: Air Intake Control Actuator and/or Its Circuit Malfunction.....7B-48
DTC B1546: A/C Refrigerant Pressure Malfunction.....7B-50
DTC B1551: Serial Communication Circuit Malfunction.....7B-51
DTC B1552: Serial Communication Circuit Malfunction.....7B-53
DTC B1553: CAN Communication Circuit Malfunction.....7B-53
DTC B1556: Camshaft Position (CMP) Sensor and/or Its Circuit Malfunction.....7B-54
DTC B1557: Wheel Speed Sensor and/or Its Circuit Malfunction.....7B-54
DTC B1561: Engine Coolant Temperature Sensor and/or Its Circuit Malfunction.....7B-54
DTC B1562: Outside Air Temperature Sensor and/or Its Circuit Malfunction.....7B-55
DTC B1563: A/C Refrigerant Pressure Sensor and/or Its Circuit Malfunction.....7B-55
HVAC Control Module and Its Circuits Inspection.....7B-55
A/C System Inspection at ECM.....7B-58

**Repair Instructions.....7B-59**
Operation Procedure for Charging A/C with Refrigerant.....7B-59
A/C Condenser Assembly On-Vehicle Inspection.....7B-63
A/C Condenser Assembly Removal and Installation.....7B-63
Desiccant Removal and Installation.....7B-64
HVAC Air Filter Removal and Installation.....7B-65
HVAC Air Filter Inspection.....7B-65
HVAC Unit Components.....7B-66
HVAC Unit Removal and Installation.....7B-67
A/C Evaporator Removal and Installation.....7B-68
A/C Evaporator Inspection.....7B-68
A/C Evaporator Temperature Sensor Removal and Installation.....7B-68
A/C Evaporator Temperature Sensor Inspection.....7B-68
Expansion Valve On-Vehicle Inspection.....7B-69
Expansion Valve Removal and Installation.....7B-69
A/C Refrigerant Pressure Sensor and Its Circuit Inspection.....7B-69
A/C Refrigerant Pressure Sensor Removal and Installation.....7B-70
Sunload Sensor Removal and Installation.....7B-70
Sunload Sensor Inspection.....7B-71
Inside Air Temperature Sensor Removal and Installation.....7B-71
Inside Air Temperature Sensor Inspection.....7B-71
Outside Air Temperature Sensor Removal and Installation.....7B-71
Outside Air Temperature Sensor Inspection.....7B-71
Air Flow Control Actuator Removal and Installation.....7B-71
Air Flow Control Actuator Inspection.....7B-71
Air Intake Control Actuator Removal and Installation.....7B-72
Air Intake Control Actuator Inspection.....7B-72
Temperature Control Actuator Removal and Installation.....7B-72
Temperature Control Actuator Inspection.....7B-72
HVAC Control Module Removal and Installation.....7B-72
A/C Compressor Drive Belt Inspection and Adjustment.....7B-72
A/C Compressor Drive Belt Removal and Installation.....7B-72
A/C Compressor Relay Inspection.....7B-72
Compressor Assembly On-Vehicle Inspection.....7B-73
Compressor Assembly Removal and Installation for M16 Engine Model.....7B-73
Compressor Assembly Removal and Installation for J20 Engine Model.....7B-74
Magnet Clutch Components for M16 Engine Model.....7B-75
Magnet Clutch Components for J20 Engine Model.....7B-76
Magnet Clutch Operating Check for M16 Engine Model.....7B-76

www.cargeek.ir

www.CarGeek.ir


Magnet Clutch Operating Check for J20 Engine Model ..... 7B-76
Magnet Clutch Removal and Installation for M16 Engine Model ..... 7B-77
Magnet Clutch Removal and Installation for J20 Engine Model ..... 7B-79
Thermal Switch On-Vehicle Inspection for M16 Engine Model ..... 7B-80
Thermal Switch Removal and Installation for M16 Engine Model ..... 7B-81
Relief Valve On-Vehicle Inspection for M16 Engine Model ..... 7B-81
Relief Valve On-Vehicle Inspection For J20 Engine Model ..... 7B-81
Relief Valve Removal and Installation for M16 Engine Model ..... 7B-81
**Specifications ..... 7B-82**
Tightening Torque Specifications ..... 7B-82
**Special Tools and Equipment ..... 7B-83**
Recommended Service Material ..... 7B-83
Special Tool ..... 7B-83

www.cargeek.ir

www.cargeek.ir

www.CarGeek.ir

# Precautions

## Precautions

### Precautions for HVAC

S5JB0A7000001

**Air Bag Warning**
Refer to “Air Bag Warning:  in Section 00”.

**A/C System Caution**
Refer to “A/C System Caution:  in Section 00”.

**Precautions on Servicing A/C System**
Refer to “Precautions on Servicing A/C System:  in Section 7B”.

**Precautions on Servicing Compressor**
Refer to “Precautions on Servicing Compressor Assembly:  in Section 7B”.

www.cargeek.ir

www.cargeek.ir

www.CarGeek.ir


# Heater and Ventilation

## General Description

### Heater and Ventilation Construction

S5JB0A7101001

The heater, an in and out air selectable-type hot water heater, is so constructed that it is possible to assure an agreeable ventilation at all times by providing the ventilator air outlets at the center and both sides (right and left) of the instrument panel, the hot air outlet at a place close to the feet of front passengers, and the defroster air outlets at places, right and left, along the windshield glass.
The heater and ventilation consist of the following parts.

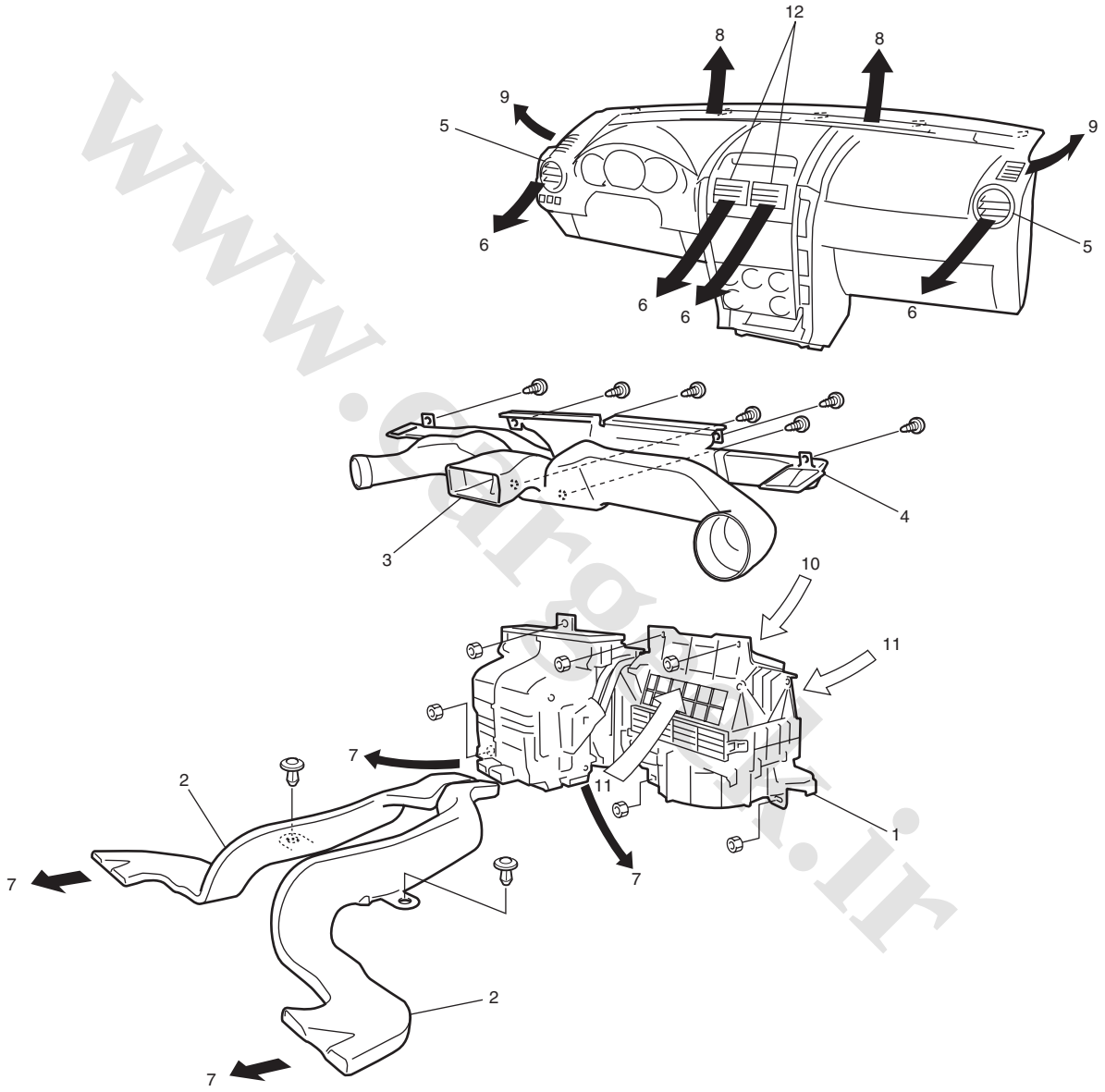


I5JB0A710001-04

| | | | |
|---|---|---|---|
| 1. HVAC unit | 4. Defroster duct | 7. Foot air | 10. Fresh air |
| 2. Rear duct | 5. Side ventilation louver | 8. Defroster air | 11. Recirculation air |
| 3. Ventilator duct | 6. Ventilation air | 9. Demister air | 12. Center ventilation louver |

www.cargeek.ir

www.CarGeek.ir

## Body Ventilation Construction

S5JB0A7101002

The body ventilation system of this vehicle has a fresh air intake (1) located at the cowl top panel. When fresh air intake air selector is at FRE position (fresh), ventilating air is drawn into the interior from the cowl center garnish and drawn out from the ventilator outlet (2) provided at each side body outer panel (both right and left side).

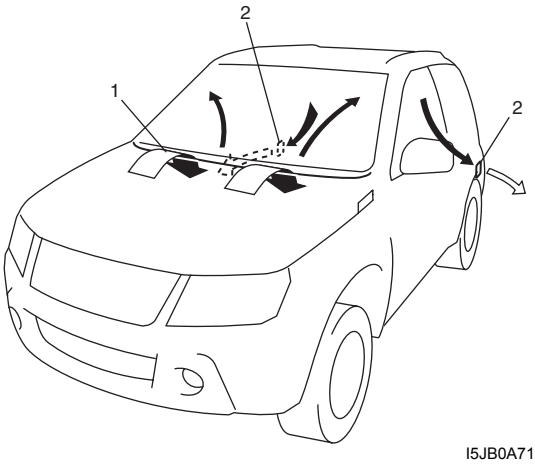


I5JB0A710002-03

## On-Board Diagnostic System Description (for Vehicle without A/C)

S5JB0A7101004

HVAC control module (for vehicle without A/C) detects malfunction, which may occur in the following area.
When HVAC control module detects any malfunction, the REC (recirculation) indicator lamp (4) flashes on and off continuously after turning ignition switch to ON position.

- ECT sensor
- CMP sensor
- Wheel speed sensor
- Temperature control actuator
- Air flow control actuator
- Air intake control actuator
- Temperature selector of HVAC control module
- Blower speed selector of HVAC control module
- Serial communication line
- CAN communication line

DTC can be checked by either one of the following ways.

- DTC can be checked by using SUZUKI scan tool (2) connected to DLC (1).
- Without using SUZUKI scan tool, DTC can be checked by reading the flashing pattern of both the FRE (fresh) indicator lamp (3) and the REC (recirculation) indicator lamp (4).
- Pressing DEF (defogger) switch (5) alternates display of current DTC and history DTC.
- DEF indicator lamp (6) remains off when display is in current DTC and it lights up when display is in history DTC.

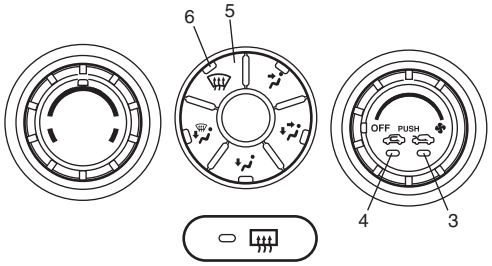


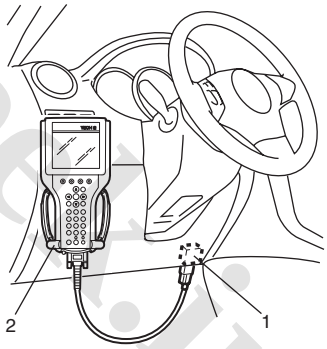


I5JB0A710004-04

www.cargeek.ir

www.CarGeek.ir


### HVAC Control System Description (for Vehicle without A/C)

S5JB0A7101005

For CAN communication system, refer to description on “CAN Communication System Description: in Section 1A”.
When following data are sent from control modules to BCM through CAN communication, they are sent from BCM to HVAC control module through serial communication line.

- Engine coolant temperature
- Engine Speed
- Wheel speed (Vehicle speed)

HVAC control module has a function to make initial settings of temperature control actuator, air intake actuator and air flow actuator.
For vehicle without A/C, HVAC control module uses engine speed signal so that temperature control actuator, air intake actuator and air flow actuator can make initial setting for door position.
Initial settings of actuators are automatically made when engine is started for the first time after battery is connected.
When initial settings are made, each actuator is forced to operate for about 15 seconds continuously.

## Schematic and Routing Diagram

### Heater and Ventilation Wiring Circuit Diagram

S5JB0A7102001

Refer to “A/C System Wiring Circuit Diagram: in Section 7B”.

### Electronic Control Input / Output Table (for Vehicle without A/C)

S5JB0A7102003

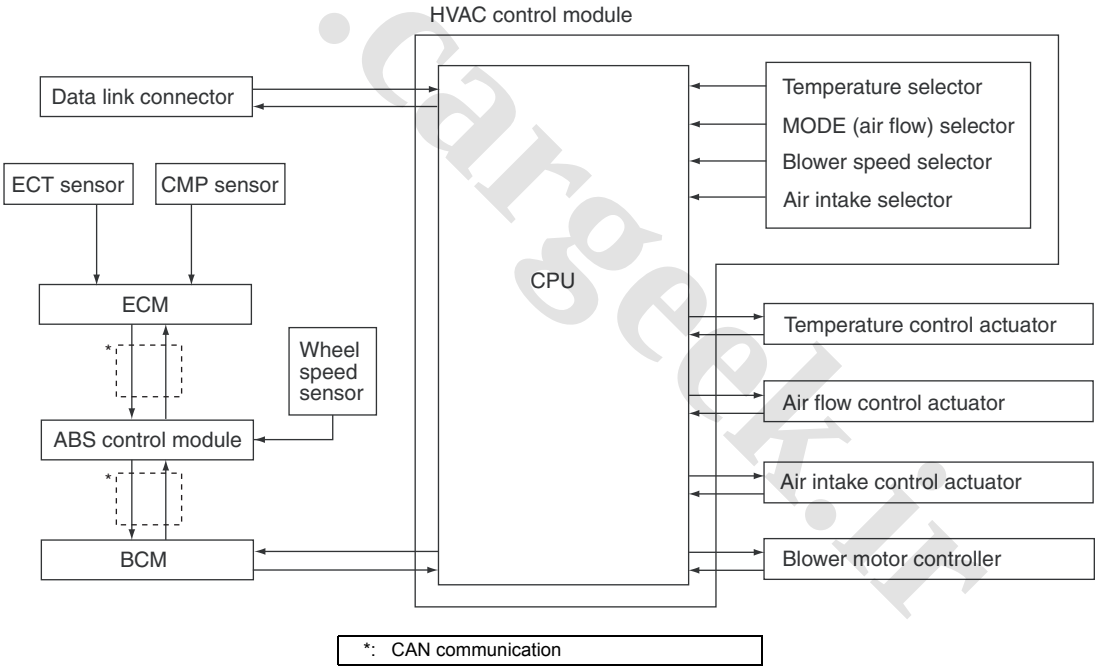


I5JB0A710003-05

www.cargeek.ir

www.CarGeek.ir

## Electronic Components Location for Heater (for Vehicle without A/C)

S5JB0A7102002

**NOTE**

**The figure shows left-hand steering vehicle. For right hand steering vehicle, parts with (*) are installed at the opposite side.**

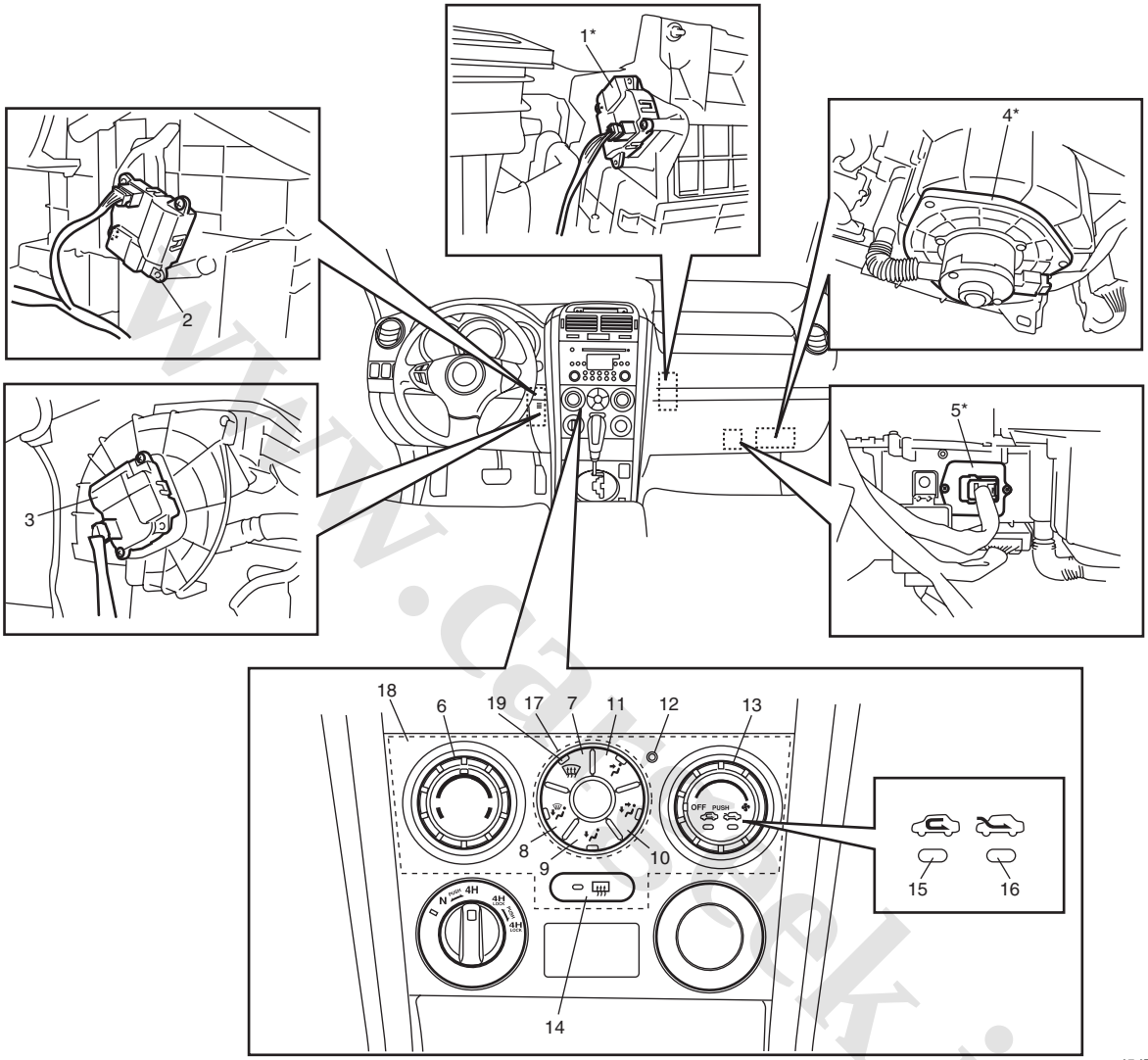


I5JB0A710005-07

| | | |
|---|---|---|
| 1. Air intake control actuator | 8. “DEF / FOOT” switch | 15. “REC” indicator lamp |
| 2. Temperature control actuator | 9. “FOOT” switch | 16. “FRE” indicator lamp |
| 3. Air flow control actuator | 10. “BI-LEVEL” switch | 17. MODE selector |
| 4. Blower motor | 11. “VENT” switch | 18. HVAC control module (for vehicle without A/C) |
| 5. Blower motor controller | 12. Alarm indicator lamp | 19. “DEF” indicator lamp |
| 6. Temperature selector | 13. Blower speed selector / Air intake selector | |
| 7. “DEF” switch | 14. Rear defogger switch | |

www.cargeek.ir

www.CarGeek.ir


# Diagnostic Information and Procedures

## Heater and Ventilation System Check

S5JB0A7104009

| Step | Action | Yes | No |
|---|---|---|---|
| 1 | ☞ **Customer complaint analysis**<br>1) Perform “Customer complaint analysis”.<br>*Was customer complaint analysis performed?* | Go to Step 2. | Perform customer complaint analysis. |
| 2 | ☞ **DTC check**<br>1) Perform “DTC check”.<br>*Is there any DTC code?* | Go to Step 3. | Go to Step 4. |
| 3 | ☞ **Troubleshooting malfunction**<br>1) Perform “Troubleshooting malfunction”.<br>*Is there any faulty condition?* | Repair or replace malfunction part, and go to Step 7. | Go to Step 5. |
| 4 | ☞ **Visual inspection**<br>1) Perform “Visual inspection”.<br>*Is there any faulty condition?* | Repair or replace malfunction part. | Go to Step 5. |
| 5 | ☞ **Perform heater and ventilation system symptom diagnosis**<br>1) Inspect and repair referring to “Heater and Ventilation Symptom Diagnosis: ”.<br>*Is there any faulty condition?* | Repair or replace malfunction part, and go to Step 7. | Go to Step 6. |
| 6 | ☞ **Check for intermittent problem**<br>1) Check for intermittent troubles referring to “Intermittent and Poor Connection Inspection: in Section 00”.<br>*Is there any faulty condition?* | Repair or replace malfunction part, and go to Step 7. | Go to Step 7. |
| 7 | ☞ **Final confirmation test**<br>1) Perform “Final confirmation test”.<br>*Is there any malfunction code?* | Go to Step 4. | Heater and ventilation system is in good condition. |

www.cargeek.ir

www.CarGeek.ir

**Description for Each Step**

**Step 1. Customer complaint analysis**
Talk to customer, and then record details of the problem.

**Customer questionnaire (example)**

| | | | |
|---|---|---|---|
| Customer's Name: | Model: | VIN: | |
| Date of Issue: | Date of Reg. | Date of Problem: | Mileage: |
| | | | |
| Problem Symptoms | • REC indicator lamp and/or FRE indicator lamp abnormal: fails to turn on / fails to turn off / flashes<br>• Abnormal noise while is working: from blower motor / from HVAC unit / from engine room, other_____<br>• Air intake selector dose not work:<br>• Blower speed selector dose not work:<br>• Temperature selector dose not work:<br>• Other: | | |
| Frequency of Occurrence | • Continuous / Intermittent (_____ times a day, a month) / other_____ | | |
| Conditions for Occurrence of Problem | • Vehicle at stop & blower motor is working:<br>• For some time after blower speed selector is ON:<br>• When outside air temperature is high:<br>• When outside air temperature is low:<br>• All the time: | | |
| Environmental Condition | • Weather: fair / cloudy / rain / snow / other_____<br>• Temperature: _____ °F (_____ °C) | | |
| Diagnostic Trouble Code | • First check: Normal code / malfunction code (_____)<br>• Second check: Normal code / malfunction code (_____) | | |

**NOTE**

**The form is a standard sample. It should be modified according to conditions characteristic of each market.**

**Step 2. Visual inspection**
As a preliminary step, be sure to perform visual check of the items that support proper function of the heater and ventilation referring to "Visual Inspection: ".

**Step 3. DTC check**
Check DTC referring to "DTC Check: ".

**Step 4. Troubleshooting malfunction**
Based on the DTC, perform an applicable DTC diagnostic flow and locate the cause of the trouble, namely in a sensor, wire harness, connector, actuator, HVAC control module or other part and repair faulty parts.

**Step 5. Heater and ventilation system symptom diagnosis**
Check any part or system suspected to be a possible cause referring to "Heater and Ventilation Symptom Diagnosis: ".

**Step 6. Check for intermittent problem**
Check any part where an intermittent trouble is easy to occur (e.g., wire harness, connector, etc.), referring to "Intermittent and Poor Connection Inspection:  in Section 00" and related circuit of trouble cord recorded.

**Step 7. Final confirmation test**
Confirm if the problem symptom is troubleshooting and the heater and ventilation system is free from any abnormal conditions. If there existed DTC, clear the DTC. Then, check if the DTC is still detected and if there is any other DTC.

www.cargeek.ir

www.CarGeek.ir


## Visual Inspection

S5JB0A7104007

Check visually the following parts and systems.

| Inspection item | Correction |
|---|---|
| • Engine coolant | • Leakage |
| • Heater pipe and/or hose | • Disconnection, looseness and deterioration |
| • Battery | • Fluid level and corrosion of terminal |
| • Connectors of electric wire harness | • Disconnection and friction |
| • Fuses | • Burning |
| • Parts | • Installation and damage |
| • Other parts that can be checked visually | |

## DTC Check

S5JB0A7104002

DTC check is the same as vehicle equipped with A/C system.
Refer to “DTC Check: in Section 7B”.

## DTC Clearance

S5JB0A7104003

DTC clearance is the same as vehicle equipped with A/C system.
Refer to “DTC Clearance: in Section 7B”.

## DTC Table

S5JB0A7104004

DTC table is the same as vehicle equipped with A/C system.
Refer to “DTC Table: in Section 7B”.

## Fail-Safe Table

S5JB0A7104005

Fail-safe table is the same as vehicle equipped with A/C system.
Refer to “Fail-Safe Table: in Section 7B”.

## Scan Tool Data

S5JB0A7104006

Scan tool data is the same as vehicle equipped with A/C system.
Refer to “Scan Tool Data: in Section 7B”.

www.cargeek.ir
www.cargeek.ir

www.CarGeek.ir

## Heater and Ventilation Symptom Diagnosis

S5JB0A7104001

| Condition | Possible cause | Correction / Reference Item |
|---|---|---|
| ***Blower won't work even when blower speed selector is ON*** | Blower fuse blown | *Replace fuse to check for short.* |
| | Blower motor faulty | *Check blower motor referring to "Blower Motor Inspection: ".* |
| | Blower motor relay faulty | *Check relay referring to "Blower Motor Relay Inspection: ".* |
| | Blower motor controller faulty | *Check blower motor controller referring to "Blower Motor Controller Inspection: ".* |
| | Blower speed selector faulty | *Check HVAC control module referring to "HVAC Control Module and Its Circuits Inspection (for Vehicle without A/C): " or "HVAC Control Module and Its Circuits Inspection: in Section 7B".* |
| | Wiring or grounding faulty | *Repair as necessary.* |
| ***Air temperature is not changed even when temperature selector is changed*** | Temperature control door broken | *Repair Temperature control door.* |
| | Linkage broken | *Check actuator linkage referring to "Actuator Linkage Inspection: ".* |
| | Heater hoses leaking or clogged | *Replace hoses.* |
| | Heater core leaking or clogged | *Replace heater core referring to "Heater Core Removal and Installation: ".* |
| | Temperature control actuator faulty | *Check temperature control actuator referring to "Temperature Control Actuator Inspection: ".* |
| | Temperature selector faulty | *Check HVAC control module referring to "HVAC Control Module and Its Circuits Inspection (for Vehicle without A/C): " or "HVAC Control Module and Its Circuits Inspection: in Section 7B".* |
| ***Air outlet port is not changed when air flow selector is changed*** | Air flow control door broken | *Repair air flow control door.* |
| | Linkage broken | *Check actuator linkage referring to "Actuator Linkage Inspection: ".* |
| | Air flow control actuator faulty | *Check air flow control actuator referring to "Air Flow Control Actuator Inspection: ".* |
| | Mode selector faulty | *Check HVAC control module referring to "HVAC Control Module and Its Circuits Inspection (for Vehicle without A/C): " or "HVAC Control Module and Its Circuits Inspection: in Section 7B".* |
| ***No fresh air inlet is changed.*** | Fuse blown | *Check related fuses and check for short circuit to ground.* |
| | Air intake control actuator faulty | *Check air intake control actuator.* |
| | Air intake control door broken | *Repair air intake control door.* |
| | Linkage broken | *Check actuator linkage referring to "Actuator Linkage Inspection: ".* |
| | Air intake selector faulty | *Check HVAC Control module referring to "HVAC Control Module and Its Circuits Inspection (for Vehicle without A/C): " or "HVAC Control Module and Its Circuits Inspection: in Section 7B".* |
| | Wiring or grounding faulty | *Repair or replace as necessary.* |

www.cargeek.ir

www.CarGeek.ir


# Repair Instructions

## Blower Unit and Heater Unit Components

S5JB0A7106001

As heater unit and blower unit are incorporated as an assembly named HVAC unit, they cannot be removed individually from vehicle body.
Same HVAC unit is used whether vehicle is equipped with A/C system or not.
For components of HVAC unit, refer to “HVAC Unit Components: in Section 7B”.

## HVAC Unit Removal and Installation (for Vehicle without A/C)

S5JB0A7106002

Refer to “HVAC Unit Removal and Installation: in Section 7B”.

## HVAC Air Filter Removal and Installation (for Vehicle without A/C)

S5JB0A7106024

Refer to “HVAC Air Filter Removal and Installation: in Section 7B”.

## HVAC Air Filter Inspection (for Vehicle without A/C)

S5JB0A7106025

Refer to “HVAC Air Filter Inspection: in Section 7B”.

## Blower Motor Removal and Installation

S5JB0A7106003

### Removal

1) Disconnect negative (–) cable at battery.
2) Disable air bag system referring to “Disabling Air Bag System: in Section 8B”.
3) Disconnect blower motor lead wire (2) at coupler.
4) Remove blower motor (1) from HVAC unit.

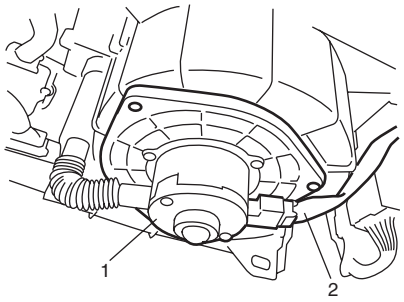


I5JB0A710006-03

### Installation

1) Reverse removal procedure for installation.
2) Enable air bag system referring to “Enabling Air Bag System: in Section 8B”.

## Blower Motor Inspection

S5JB0A7106004

- Check continuity between terminals as shown in the figure.
  If check result is continuity, proceed to next operation check. If not, replace.

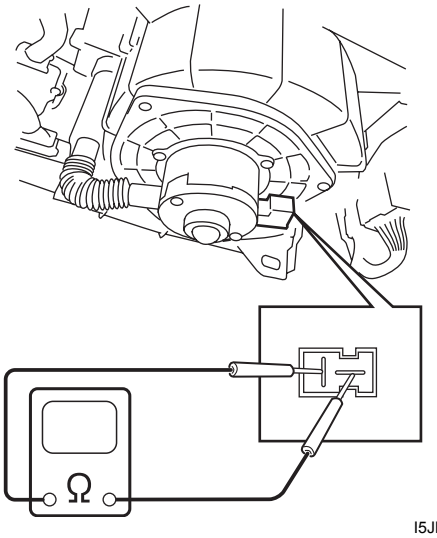


I5JB0A710007-01

- Check for operation and electric current.
  a. Put blower motor (1) in a soft-jawed vise.
  b. Connect battery to blower motor as shown.
  c. Check if blower motor operates smoothly without noise.
  d. Check if ammeter indicates the specified current. If measured current is out of specification, replace blower motor.

  **<u>Specified current for blower motor</u>**
  **Approx. 12 A at 12 V**

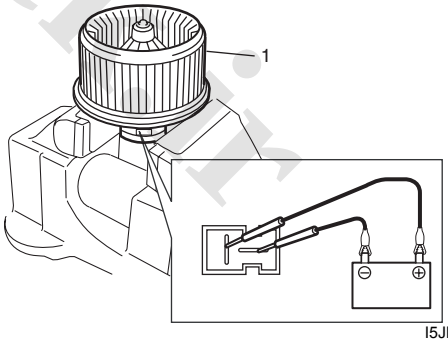


I5JB0A710008-01

www.cargeek.ir

www.CarGeek.ir

## Blower Motor Controller Removal and Installation

S5JB0A7106005

### Removal

1) Disconnect negative (–) cable at battery.
2) Disable air bag system referring to “Disabling Air Bag System: in Section 8B”.
3) Remove glove box.
4) Remove passenger lower member.
5) Disconnect blower motor controller coupler (3).
6) Remove blower motor controller (1) by loosening its fastening screws (2).

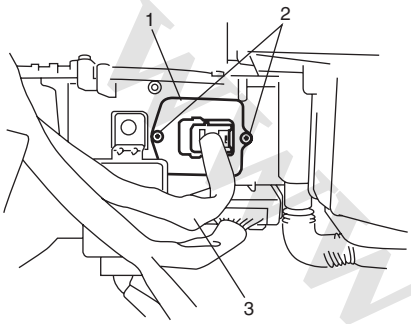


I5JB0A710009-01

### Installation

1) Reverse removal procedure.
2) Enable air bag system referring to “Enabling Air Bag System: in Section 8B”.

## Blower Motor Controller Inspection

S5JB0A7106006

Check controller for operation as follows.

- Using service wire, connect battery positive terminal to “1” terminal (1) of blower motor controller (6) and battery negative terminal to “2” terminal (2) of blower motor controller.
- Using bulb (3.4 W) (4) and service wire, connect battery positive terminal to “3” terminal (3) of blower motor controller as shown figure.
- Arrange 3 new 1.5 V batteries (5) in series (check that total voltage is 4.5 – 5.0 V) and connect its positive terminal to “3” terminal of blower motor controller and negative terminal to “2” terminal of blower motor controller. Then, check that bulb lights. If bulb does not light under the above conditions, replace blower motor controller.

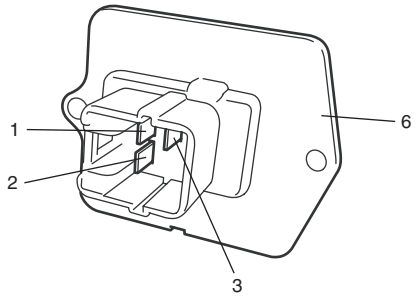


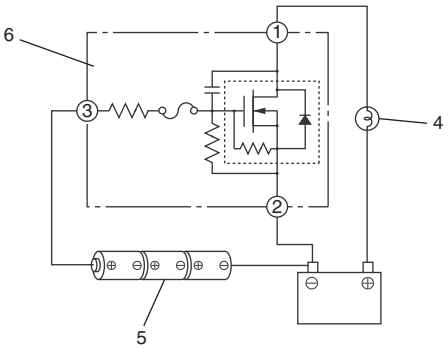


I5JB0A710010-01

## Blower Motor Relay Inspection

S5JB0A7106008

1) Disconnect negative (–) cable at battery.
2) Remove blower motor relay (1) from vehicle.
3) Check that there is no continuity between terminal “c” and “d”. If there is continuity, replace relay.
4) Connect battery positive (+) terminal to terminal “b” of relay.
   Connect battery negative (–) terminal to terminal “a” of relay.
   Check continuity between terminal “c” and “d”.
   If there is no continuity when relay is connected to the battery, replace relay.

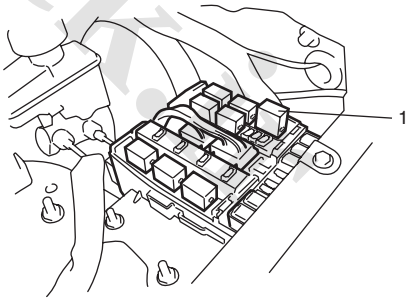


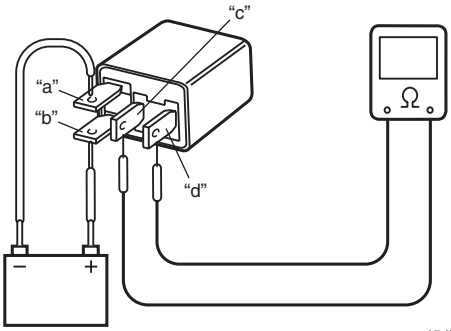


I5JB0A710011-01

www.cargeek.ir

www.CarGeek.ir


## Heater Core Removal and Installation

S5JB0A7106010

### Removal

1) Remove instrument panel referring to “Instrument Panel Removal and Installation: in Section 9C”.
2) Remove HVAC unit. Refer to “HVAC Unit Removal and Installation: in Section 7B”.
3) Remove heater core pipe clamp and then, pull out heater core (1) from HVAC unit.

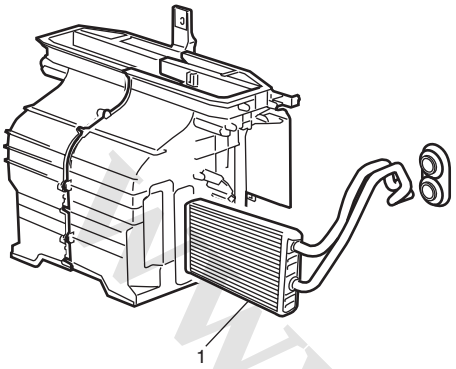


I5JB0A710012-02

### Installation

1) Install heater core by reversing removal procedure, noting the following items.
   - When installing heater core, be careful not to damage fins of heater core.
   - When installing each part, be careful not to catch any wiring harness.
2) Fill engine coolant to radiator.
3) Enable air bag system referring to “Enabling Air Bag System: in Section 8B”.

## HVAC Control Module Removal and Installation

S5JB0A7106011

### Removal

1) Disconnect negative (–) cable at battery.
2) Remove center garnish with audio unit (if equipped) and HVAC control module referring to “Audio Unit Removal and Installation: in Section 9C”.
3) Remove HVAC control module mounting screws and then, remove HVAC control module (2) from center garnish (1).

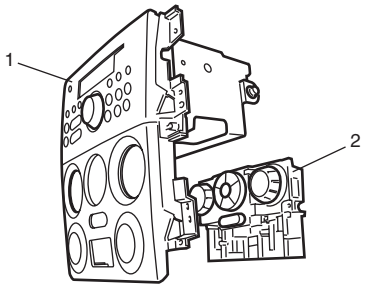


I5JB0A710013-01

### Installation

Reverse removal procedure.

## HVAC Control Module and Its Circuits Inspection (for Vehicle without A/C)

S5JB0A7106012

HVAC control module and its circuits inspection is the same as vehicle equipped with A/C system.
Refer to “HVAC Control Module and Its Circuits Inspection: in Section 7B”.

## Air Flow Control Actuator Removal and Installation

S5JB0A7106013

### Removal

1) Disconnect negative (–) cable at battery.
2) Remove steering column hole cover from instrument panel.
3) Disconnect air flow control actuator connector (2).
4) Remove screws and then, remove air flow control actuator (1) from HVAC unit.

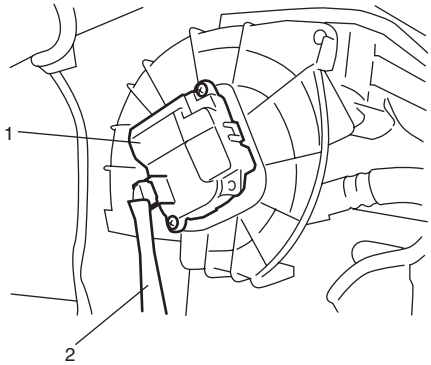


I5JB0A710014-02

### Installation

Reverse removal procedure.

## Air Flow Control Actuator Inspection

S5JB0A7106014

1) Remove air flow control actuator (1) referring to “Air Flow Control Actuator Removal and Installation: ”.
2) Check resistance between “d” and “e” terminals.

   **<u>Air flow control actuator resistance</u>**
   **DEF position: Approx. 700 Ω**
   **FOOT / BENT position: Approx. 1.7 kΩ**
   **FOOT position: Approx. 2.4 kΩ**
   **BI-LEVEL position: Approx. 3.9 kΩ**
   **VENT position: Approx. 5.1 kΩ**

3) Connect battery positive (+) terminal to terminal “a” and battery negative (–) terminal to terminal “b”. Check if position of air flow control actuator changes VENT position to DEF position.

www.cargeek.ir

www.CarGeek.ir

4) Connect battery positive (+) terminal to terminal “b” and battery positive (–) terminal to terminal “a”. Check if position of air flow control actuator changes DEF position to VENT position.
If malfunction is found, replace air flow control actuator with new one.

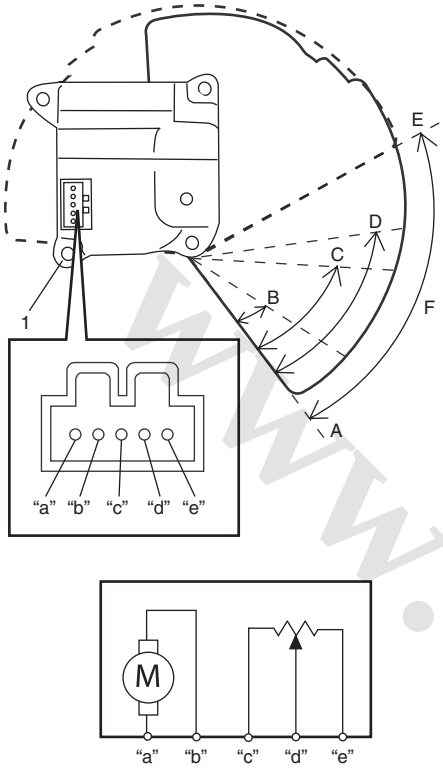


I5JB0A710015-03

| | |
|---|---|
| A: VENT position | D: DEF / FOOT position (Approx. 50°) |
| B: BI-LEVEL position (Approx. 22°) | E: DEF position |
| C: FOOT position (Approx. 40°) | F: Approx. 82° |

## Temperature Control Actuator Removal and Installation

S5JB0A7106015

### Removal

1) Disconnect negative (–) cable at battery.
2) Remove steering column hole cover from instrument panel.
3) Disconnect temperature control actuator connector (2).
4) Remove screws (3) and then, remove temperature control actuator (1) from HVAC unit.

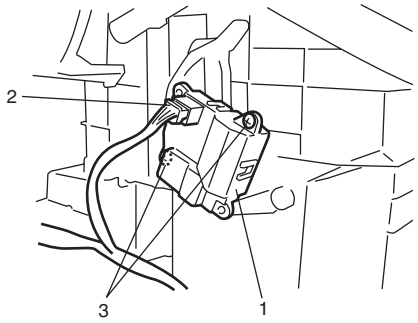


I5JB0A710016-01

### Installation

Reverse removal procedure.

## Temperature Control Actuator Inspection

S5JB0A7106016

1) Remove temperature control actuator (1). Refer to “Temperature Control Actuator Removal and Installation: ”.
2) Check resistance between “d” and “e” terminals.

**Temperature control actuator resistance**
**Max cold position: Approx. 480 Ω**
**Max hot position: Approx. 3.9 kΩ**

3) Connect battery positive (+) terminal to terminal “b” and battery negative (–) terminal to terminal “a”. Check if position of actuator lever changes COLD position to HOT position.
4) Connect battery positive (+) terminal to terminal “a” and battery positive (–) terminal to terminal “b”. Check if position of actuator lever changes HOT position to COLD position.
If malfunction is found, replace temperature control actuator with new one.

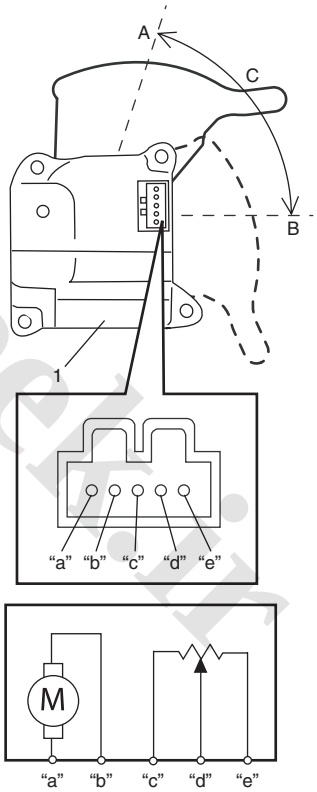


I5JB0A710017-03

| |
|---|
| A: Max cold position |
| B: Max hot position |
| C: Approx. 72° |

www.cargeek.ir

www.CarGeek.ir


## Air Intake Control Actuator Removal and Installation

S5JB0A7106017

### Removal

1) Disconnect negative (–) cable at battery.
2) Remove glove box.
3) Disconnect air intake control actuator connector (2).
4) Remove screws and then, remove air intake control actuator (1) from HVAC unit.

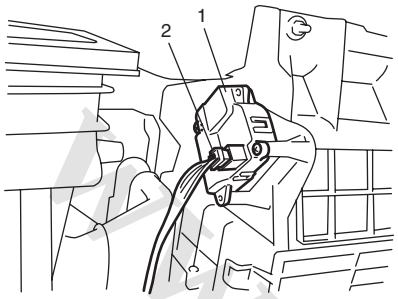


I5JB0A710018-01

### Installation

Reverse removal procedure.

## Air Intake Control Actuator Inspection

S5JB0A7106018

1) Remove air intake control actuator (1). Refer to “Air Intake Control Actuator Removal and Installation: ”.
2) Check resistance between “d” and “e” terminals of actuator.

   **<u>Air intake control actuator resistance</u>**
   **LH steering vehicle**
   **REC position: Approx. 4.5 kΩ**
   **FRE position: Approx. 1.2 kΩ**
   **RH steering vehicle**
   **REC position: Approx. 1.2 kΩ**
   **FRE position: Approx. 4.5 kΩ**

3) Connect battery positive (+) terminal to terminal “a” and battery negative (–) terminal to terminal “b”. Check if position of actuator lever is REC position.
4) Connect battery positive (+) terminal to terminal “b” and battery negative (–) terminal to terminal “a”. Check if position of actuator lever is FRESH position.

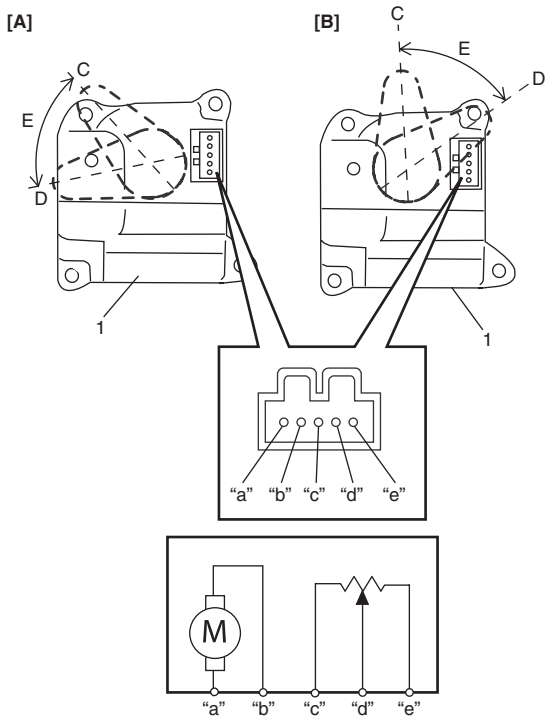


I5JB0A710019-03

| | |
|---|---|
| [A]: | LH steering vehicle |
| [B]: | RH steering vehicle |
| C: | REC position |
| D: | FRESH position |
| E: | Approx. 60° |

## Actuator Linkage Inspection

S5JB0A7106019

- Check if each actuator linkage operates smoothly.
- Check actuator rod for bend.
- Check each actuator linkage for breakage.
- Make sure if there is not any obstruction in operating range of actuator linkage.

If any malfunction is found, repair or replace faulty part(s).

www.cargeek.ir

www.CarGeek.ir

## Center Ventilation Louver Removal and Installation

S5JB0A7106020

### Removal

1) Disconnect negative (–) cable at battery.
2) Disable air bag system referring to “Disabling Air Bag System: in Section 8B”.
3) Remove center garnish with audio unit and HVAC control module referring to “Audio Unit Removal and Installation: in Section 9C”.
4) Remove mounting screw (1) and then pull off center ventilation louver (2).

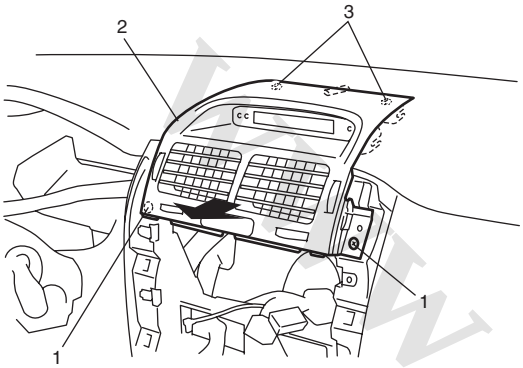


I5JB0A710020-01

| |
|---|
| 3. Clip |

5) Disconnect connectors and remove center ventilation louver.
6) Remove center ventilation louver from center garnish.

### Installation

Reverse removal procedure, noting the following item.
Insert backside of center ventilation louver to ventilator duct surely.

- When installing center ventilation louver, align boss (1) and claws (2) with installation hole of instrument panel.

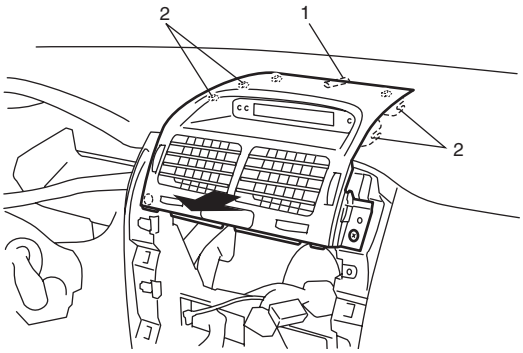


I5JB0A710021-01

- Enable air bag system referring to “Enabling Air Bag System: in Section 8B”.

## Side Ventilation Louver Removal and Installation

S5JB0A7106021

### Removal

1) Remove steering column hole cover.
2) Remove instrument panel referring to “Instrument Panel Removal and Installation: in Section 9C”.
3) Remove screws and claws (3), and then remove defroster duct (2) from instrument panel.
4) Remove ventilator duct (1) from instrument panel.

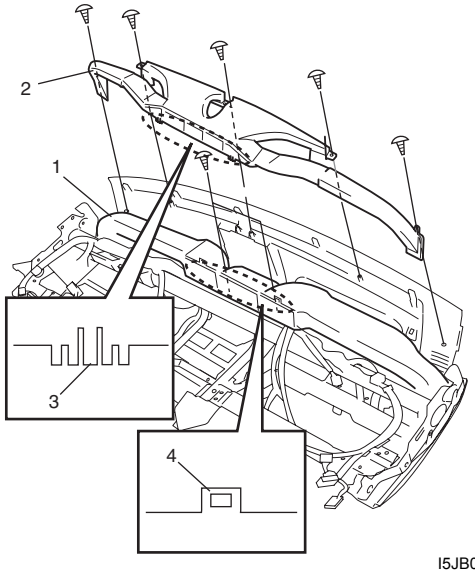


I5JB0A710022-02

| |
|---|
| 4. hole |

5) Remove side ventilation louver (1) from instrument panel while pressing claws (2).

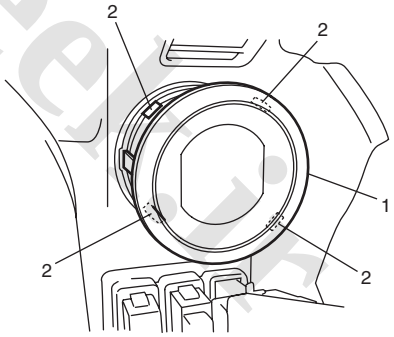


I5JB0A710023-01

www.cargeek.ir

www.CarGeek.ir


### Installation

1) Reverse removal procedure, noting the following.
   - Install side ventilation louver (1) to instrument panel (2) as shown in figure.

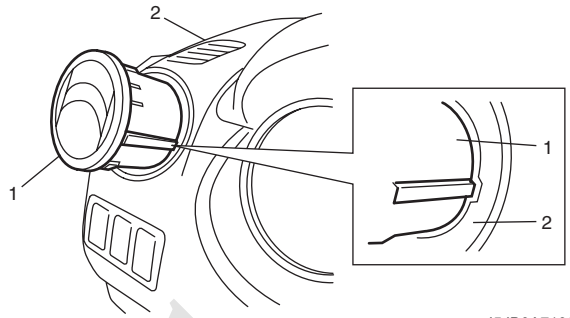


I5JB0A710024-02

   - When installing defroster duct to instrument panel, put claws of defroster duct into hole of ventilator duct surely.

## Rear Duct Components

S5JB0A7106022

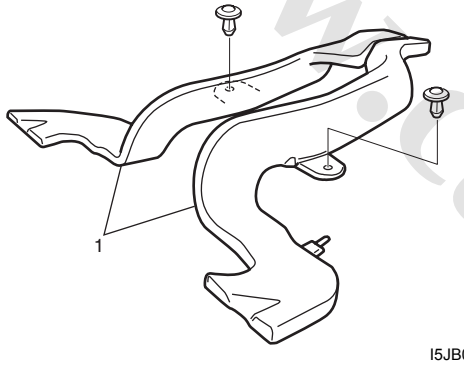


I5JB0A710025-02

| | |
|---|---|
| 1. | Rear duct |

## Rear Duct Removal and Installation

S5JB0A7106023

### Removal

1) Disconnect negative (–) cable at battery.
2) Remove front seats.
3) Remove console box.
4) Take off carpet till rear ducts is totally exposed.
5) Remove rear ducts (1).

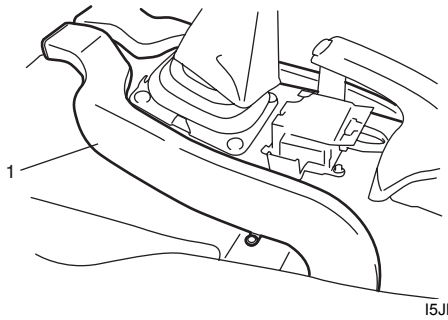


I5JB0A710026-01

### Installation

Reverse removal procedure noting the following.

- Insert boss (1) of duct into hole of floor member (2).

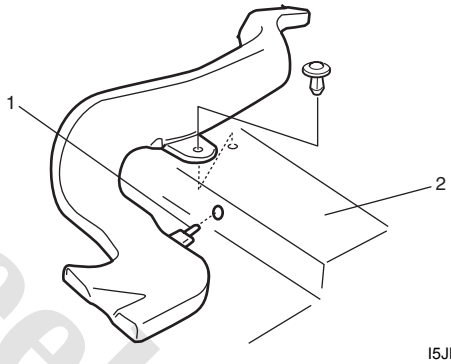


I5JB0A710027-01

www.cargeek.ir

www.CarGeek.ir

# Air Conditioning System

## Precautions

### A/C System Caution

S5JB0A7200004

**⚠ CAUTION**

**The air conditioning system of this vehicle uses refrigerant HFC-134a (R-134a).**
**None of refrigerant, compressor oil and component parts is interchangeable between two types of A/C: one using refrigerant HFC-134a (R-134a) and the other using refrigerant CFC-12 (R-12).**
**Be sure to check which refrigerant is used before any service work including inspection and maintenance. For identification between these two types, refer to "A/C Refrigerant Type Description: ".**
**When replenishing or changing refrigerant and compressor oil and when replacing parts, make sure that the material or the part to be used is appropriate to the A/C installed in the vehicle being serviced.**
**Use of incorrect one will result in leakage of refrigerant, damage in parts or other faulty condition.**

### Precautions on Servicing A/C System

S5JB0A7200005

**⚠ WARNING**

**Should refrigerant HFC-134a (R-134a) is exposed to your eye(s), consult a doctor immediately.**

- **Do not use your hand to rub affected eye(s). Instead, use fresh cold water to splash it over affected area to thus gradually raise its temperature above the freezing point.**
- **Obtain proper treatment as soon as possible from a doctor or eye specialist. Should liquid refrigerant HFC-134a (R-134a) is exposed to your skin, such affected part should be treated in the same manner as when skin is frostbitten or frozen.**

### Precautions in Diagnosing Trouble

S5JB0A7200006

- Do not disconnect connector from HVAC control module, battery cable from battery, or main fuse before reading diagnostic information stored in HVAC control module memory.
- When diagnosing vehicle indoors, sunload sensor has to be lighted over vertically with an incandescent lamp. Otherwise, DTC is detected even if sunload sensor is normal.
- Diagnostic information (diagnostic trouble code) stored in HVAC control module can be checked by display of HVAC control module. Also, it can be checked by using SUZUKI scan tool. Before checking diagnostic information (diagnostic trouble code), read this manual and operator's manual for SUZUKI scan tool to know how to read diagnostic information (diagnostic trouble code).
- When trouble is diagnosed using diagnostic information (diagnostic trouble code) on display of HVAC control module, keep in your mind that each diagnostic information (diagnostic trouble code) has priority, and only diagnostic information (diagnostic trouble code) which has the highest priority is indicated. Therefore, after troubleshooting the malfunction, make sure if there exists any other diagnostic information (diagnostic trouble code).
- After troubleshooting some trouble, DTC can be stored in HVAC control module memory as history DTC.
- Be sure to read "Precautions for Electrical Circuit Service" before inspection.

### Precautions on Handling Refrigerant HFC-134a (R-134a)

S5JB0A7200007

- When handling refrigerant, always wear goggles to protect your eyes.
- Avoid you direct contact to liquid refrigerant.
- Do not heat refrigerant container higher than 40 °C (104 °F).
- Do not discharge refrigerant into atmosphere.
- Do not allow liquid refrigerant to touch bright metals. Refrigerant combined with moisture is corrosive and will tarnish surfaces of bright metals including chrome.
- After recovering refrigerant from system, the amount of compressor oil removed must be measured and the same amount added to the system.

www.cargeek.ir

www.CarGeek.ir


## Precautions on Servicing Refrigerant Line

S5JB0A7200008

- When connecting hoses and pipes, apply a few drops of compressor oil (refrigerant oil) to seats of coupling nuts and O-ring.

### For M16 engine model

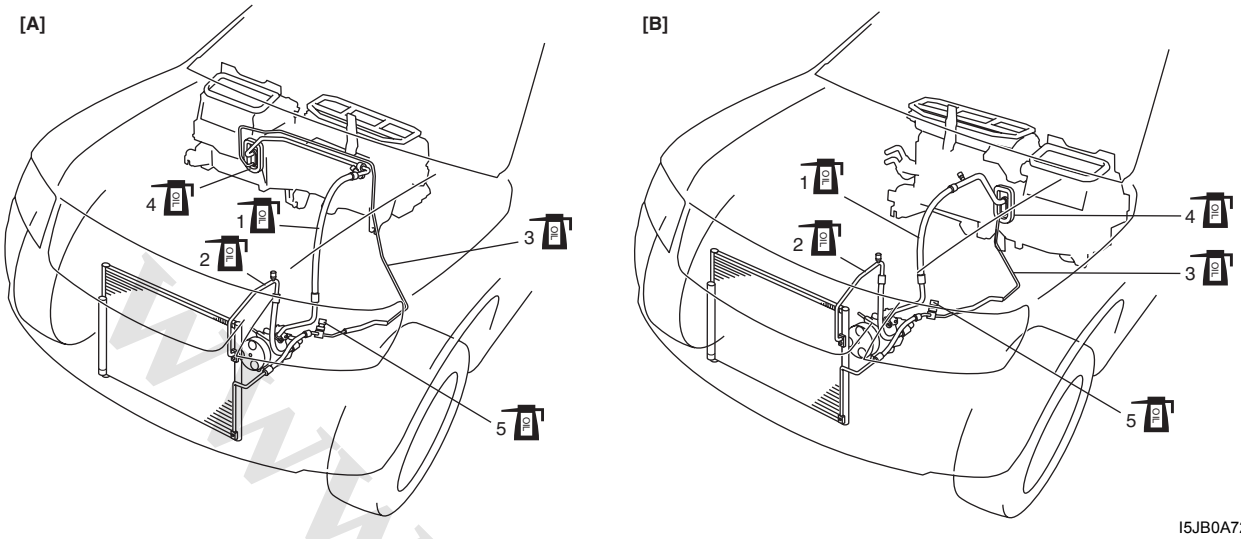


I5JB0A720001-02

| | | |
|---|---|---|
| [A]: LH steering vehicle | 2. Discharge hose | 5. Pressure sensor |
| [B]: RH steering vehicle | 3. Liquid pipe | OIL : Apply compressor oil (refrigerant oil) to O-ring. |
| 1. Suction hose | 4. Expansion valve | |

### For J20 engine model

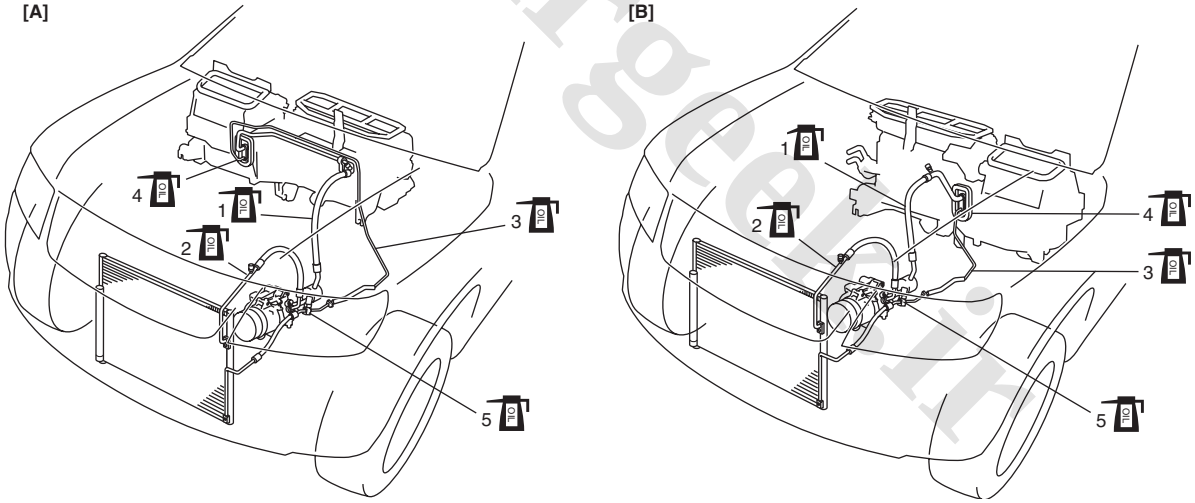


I5JB0A720002-02

| | | |
|---|---|---|
| [A]: LH steering vehicle | 2. Discharge hose | 5. Pressure sensor |
| [B]: RH steering vehicle | 3. Liquid pipe | OIL : Apply compressor oil (refrigerant oil) to O-ring. |
| 1. Suction hose | 4. Expansion valve | |

www.cargeek.ir

 www.CarGeek.ir

- Never use heat for bending pipes. When bending a pipe, try to make its bending radius as slight as possible.
- Keep internal parts of air conditioning free from moisture and dirt. When disconnecting any line from system, install a blind plug or cap to the fitting immediately.
- When tightening or loosening a fitting, use two wrenches, one for turning and the other for support.
- Tighten bolts to specified torque.

  **Tightening torque**
  **Refrigerant line bolt: 12 N·m (1.2 kgf-m, 9.0 lb-ft)**

- Route drain hose so that drained water does not make any contact to vehicle components.

## Precautions on Refrigerant Recovery

S5JB0A7200009

When discharging refrigerant out of A/C system, always recover it by using refrigerant recovery and recycling equipment. Discharging refrigerant HFC-134a (R-134a) into atmosphere would cause adverse effect to environments.

**NOTE**

**When handling recovery and recycling equipment, be sure to follow the instruction manual for the equipment.**

## Precautions on Refrigerant Charge

S5JB0A7200010

Charge a proper amount of refrigerant to A/C system according to charging procedure described in recovery, evacuation and charging. Refer to “Charge” in “Operation Procedure for Charging A/C with Refrigerant: ”.

## Precautions on Replenishing Compressor Oil

S5JB0A7200011

When replacing air conditioning parts with new ones, it is necessary to replenish oil by the amount supposedly remaining in each part.

### When Charging Refrigerant Only

When charging refrigerant without replacing any component, replenish the same amount of measured oil when recovering refrigerant (if not measure, replenish 20 $cm^3$ (20 cc) oil).

### When Replacing Compressor

**⚠ CAUTION**

**Be sure to use specified compressor oil or an equivalent compressor oil.**

Compressor oil is sealed in each new compressor (1) by the amount required for air conditioner cycle. Therefore, when using a new compressor for replacement, drain oil from it by the amount calculated as follows.

**“C” = “A” – “B”**
**“C”: Amount of oil to be drained**
**“A”: Amount of oil sealed in a new compressor**
**“B”: Amount of oil remaining in removed compressor**

**NOTE**

**Compressor assembly supplied from factory is filled up with the following amount of oil.**

**: Compressor oil 99000–99015–00A (Compressor oil (MATSUSHITADENKI) - Domestic) (M16 engine model)**
**: Compressor oil 99000–99022–00E (Compressor oil (DH-PS, 250cc)) (J20 engine model)**

**Amount of oil in new compressor**
**M16 engine model: 120 (+10, –0) $cm^3$ (120 (+10, –0) cc)**
**J20 engine model: 150 (+20, –0) $cm^3$ (150 (+20, –0) cc)**

**Amount of compressor oil to be replenished after part replacement**
**Evaporator: 50 $cm^3$ (50 cc)**
**Condenser for M16 engine model: 30 $cm^3$ (30 cc)**
**Condenser for J20 engine model: 30 $cm^3$ (30 cc)**
**Receiver/dryer for M16 engine model: 10 $cm^3$ (10 cc)**
**Receiver/dryer for J20 engine model: 10 $cm^3$ (10 cc)**
**Hoses: 10 $cm^3$ (10 cc)**
**Pipes: 10 $cm^3$ (10 cc)**

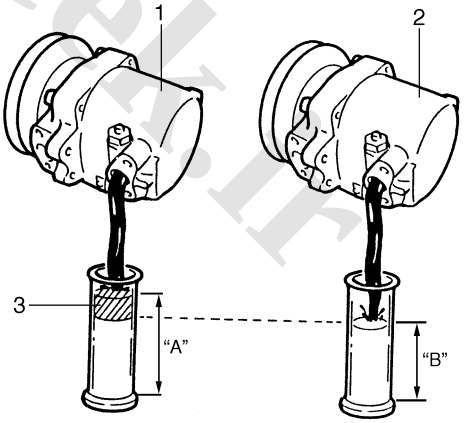


I5JB0A720003-01

| | |
|---|---|
| 2. | Removed compressor |
| 3. | Excess oil (A – B) |

www.cargeek.ir

www.CarGeek.ir


## Precautions on Servicing Compressor Assembly

S5JB0A7200002

**⚠ CAUTION**

- **None of refrigerant, compressor oil and component parts is interchangeable between two types of A/C: one using CFC-12 (R-12) and the other using HFC-134a (R-134a).**
  **For identification between these two types, refer to "A/C Refrigerant Type Description: ".**
  **When replenishing or changing refrigerant and compressor oil and when replacing parts, make sure that the material or the part to be used is appropriate to the A/C installed in the vehicle being serviced. Use of incorrect refrigerant or compressor oil will result in leakage of refrigerant, damage in parts or other faulty condition.**
- **When servicing the compressor, keep dirt or foreign material away from getting on or into the compressor parts and system. Clean tools and a clean work area are important for proper service. The compressor connection and the outside of the compressor should be cleaned before any "On-vehicle" repair or before removal of the compressor. The parts must be kept clean at all times and any parts to be reassembled should be cleaned with trichloromethane, naphtha, kerosene or equivalent solvent and dried with dry air. Use only lint free cloths to wipe parts.**
- **When compressor is removed from the vehicle for servicing, the oil remaining in the compressor should be discarded and new refrigerant oil added to the compressor.**
  **Minor repair procedures may be done on the vehicle without discharging the system. Major repair procedures require that the system be discharged of refrigerant.**

# General Description

## AUTO A/C System Description

S5JB0A7201004

The automatic air conditioning system (auto A/C), HVAC control module automatically controls inside air temperature, blower speed, airflow outlet and so forth.
Once users set up desired inside air temperature with the temperature control selector, select "AUTO" position of blower speed selector and push auto A/C switch, HVAC control module detects inside air temperature, outside air temperature, amount of sunlight, and engine coolant temperature by means of inside air temperature sensor, outside air temperature sensor, sunload sensor, and engine coolant temperature (ECT) sensor respectively.
Then, HVAC control module keeps desired in-car temperature at any time.
Then, HVAC control module keeps in-car temperature at desired level and auto A/C indicator lamp of HVAC control module turns on.

## HVAC Control System Description

S5JB0A7201005

For CAN communication system, refer to description on "CAN Communication System Description: in Section 1A".
When following data are sent from control modules to BCM through CAN communication, they are sent from BCM to HVAC control module through serial communication line.

- Engine coolant temperature
- Engine speed
- A/C refrigerant pressure
- Vehicle Speed (wheel speed)
- Outside air temperature

Based on above data, HVAC control module sends A/C compressor ON / OFF request signal to BCM through serial communication line.
BCM sends this signal through CAN communication to ECM which then causes compressor relay to turn ON / OFF.
For more information on signal transmission and reception of Auto A/C system, refer to "Auto A/C Electronic Control Input / Output Table: ".
HVAC control module has a function to make initial settings of temperature control actuator, air intake actuator and air flow actuator.
Initial settings of actuators are automatically made when engine is started for the first time after battery is connected.
When initial settings are made, each actuator is forced to operate for about 15 seconds continuously.

www.cargeek.ir

www.CarGeek.ir

## Auto A/C Electronic Control Input / Output Table

S5JB0A7201006

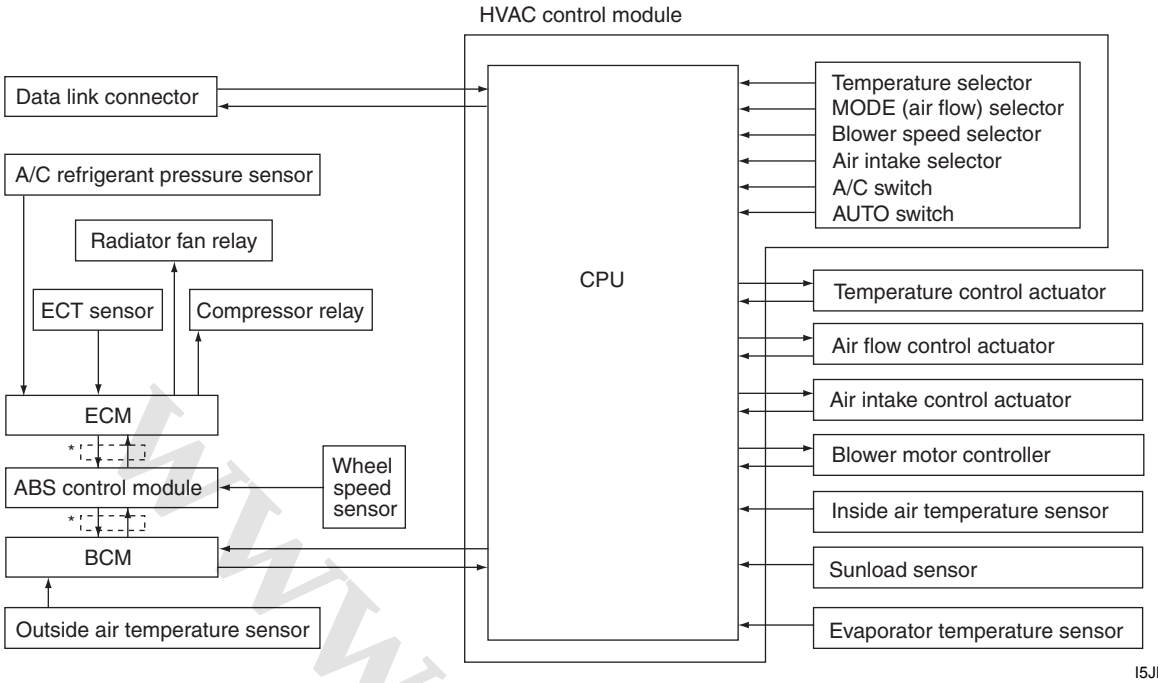


I5JB0A720004-05

*: CAN communication

## HVAC Control Module Operation Description

S5JB0A7201007

### Temperature Control

HVAC control module calculates the target temperature control door position based on signals from the temperature selector, inside air temperature sensor, outside air temperature sensor and sunload sensor and controls the temperature control actuator so that the current position of the temperature control door matches its target position.

### Fan Speed Control

HVAC control module calculates the target blower fan speed based on signals from the temperature selector, inside air temperature sensor, outside air temperature sensor and sunload sensor, compares it with the current blower fan speed inputted from the blower motor controller to control the current blower fan speed to the target level.

### Air Flow Outlet Control

HVAC control module calculates the target temperature control door position based on signals from the temperature selector, inside air temperature sensor, outside air temperature sensor and sunload sensor. Using thus obtained target temperature control door position, it further calculates the target air flow control door position and controls the air flow control actuator so that the current air flow control door position becomes the target position.

### Air Intake Position Control

HVAC control module determines the air intake position based on signals from the temperature selector, inside air temperature sensor, outside air temperature sensor and sunload sensor and controls the air intake actuator.

## A/C Refrigerant Type Description

S5JB0A7201001

Whether the A/C in the vehicle being serviced uses HFC-134a (R-134a) or CFC-12 (R-12) is indicated on LABEL (1) on the compressor. Also, it can be checked by the shape of the service (charge) valve (2).

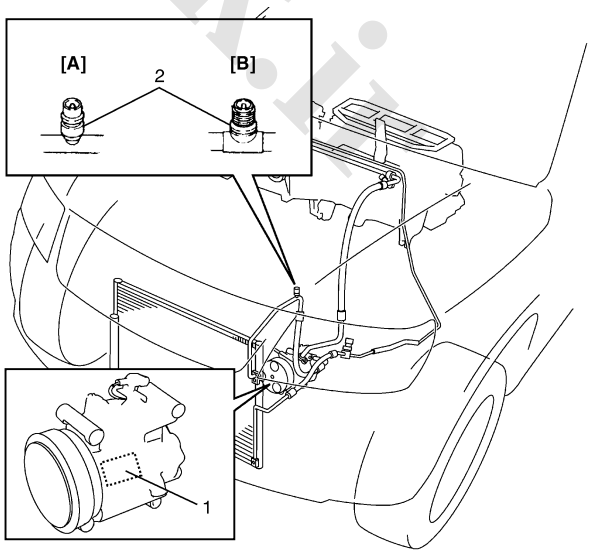


I5JB0A720005-01

| | |
|---|---|
| [A]: | HFC-134a (R-134a) |
| [B]: | CFC-12 (R-12) |

www.cargeek.ir

www.CarGeek.ir


## Sub-Cool A/C System Description

S5JB0A7201008

In the sub-cool A/C system (condenser (3) integrated with receiver / dryer (4)), the inside of the condenser is divided into the condensation part and the sub-cooler part, and the receiver / dryer is located between those. In the receiver / dryer (4), the refrigerant is separated into the vapor refrigerant and the liquid refrigerant. Only the liquid refrigerant is delivered to the sub-cooler part of the condenser. The refrigerant is supercooled by the sub-cooler part of the condenser.

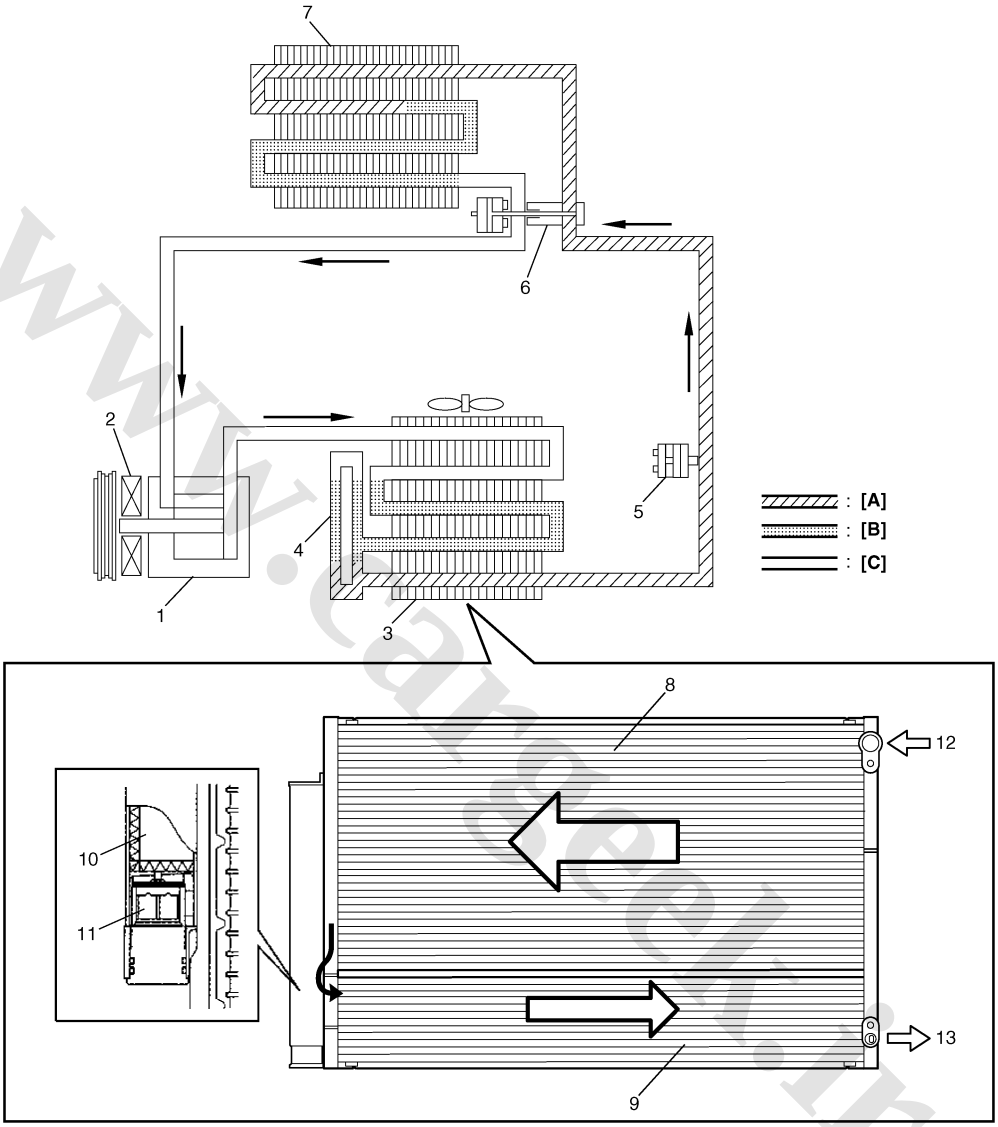


I5JB0A720006-02

| | | |
|---|---|---|
| [A]: Liquid | 4. Receiver / dryer | 10. Desiccant |
| [B]: Vapor | 5. Refrigerant pressure sensor | 11. Filter |
| [C]: Superheated vapor | 6. Expansion valve | 12. Vapor refrigerant |
| 1. Compressor | 7. Evaporator | 13. Liquid refrigerant |
| 2. Magnet clutch | 8. Condensation part | |
| 3. Condenser | 9. Sub-cooler part | |

www.cargeek.ir

www.CarGeek.ir

## A/C Evaporator Temperature Sensor Description

S5JB0A7201002

The A/C evaporator temperature sensor (1) is a temperature sensor to sense the temperature of air discharged from evaporator.

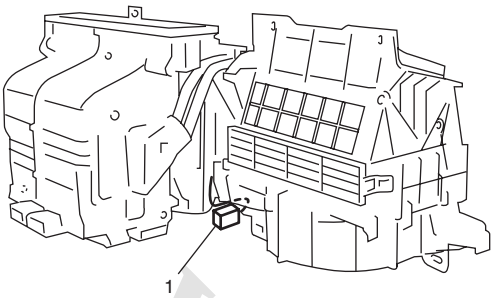


I5JB0A720089-02

The electrical characteristic is shown.

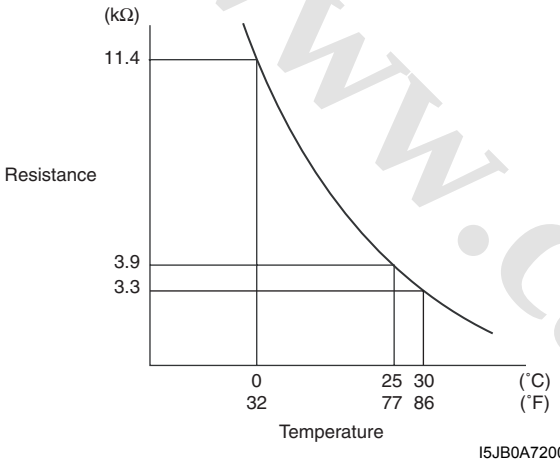


I5JB0A720090-03

When temperature is lower than specified, A/C controller makes magnet clutch turn off to prevent evaporator from frosting.

## On-Board Diagnostic System Description

S5JB0A7201003

HVAC control module detects malfunction, which may occur in the following area. When HVAC control module detects any malfunction, the REC (recirculation) indicator lamp (3) flashes on and off continuously after turning ignition switch to ON position.
Abnormality exists (when air intake selector is operated while “REC” indicator lamp is flashing), “FRE” indicator lamp lights for 15 seconds and then “REC” indicator lamp flashes.

- Outside temperature sensor
- Inside temperature sensor
- Sunload sensor (Short circuit)
- Wheel speed sensor
- CMP sensor
- CAN communication line
- Serial communication line
- A/C evaporator temperature sensor
- ECT sensor
- Temperature control actuator
- Air flow control actuator
- Air intake control actuator
- Temperature selector of HVAC control module
- Blower speed selector of HVAC control module

DTC can be checked by either one of the following ways.

- DTC can be checked by using SUZUKI scan tool (2) connected to DLC (1).
- Without using SUZUKI scan tool, DTC can be checked by reading the flashing pattern of both the FRE (fresh air) indicator lamp (3) and the REC (recirculation) indicator lamp (4).
- Current DTC and history DTC by pushing DEF (defogger) switch (5) when DTC displayed by HVAC control module.
- History DTC is such DTC which HVAC control module saves in its memory when it detects current DTC for 60 seconds or more continuously.
- During indication of current DTC, DEF (defogger) indicator lamp (6) is OFF. However DEF indicator lamp (6) is ON during indication of history DTC.

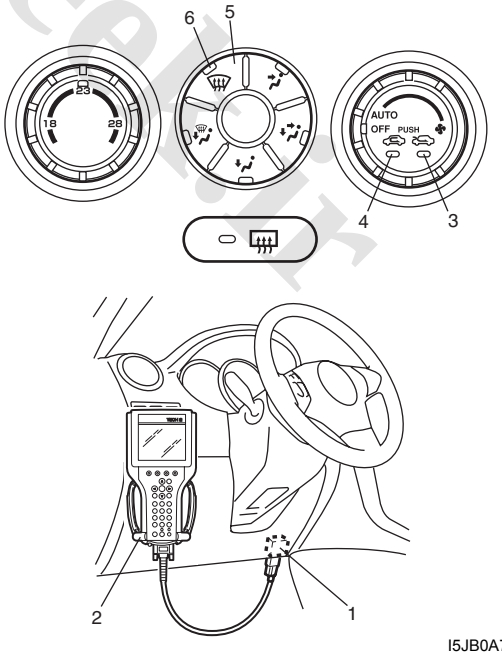


I5JB0A720093-01

www.cargeek.ir

www.CarGeek.ir


# Schematic and Routing Diagram

## A/C System Wiring Circuit Diagram

S5JB0A7202002

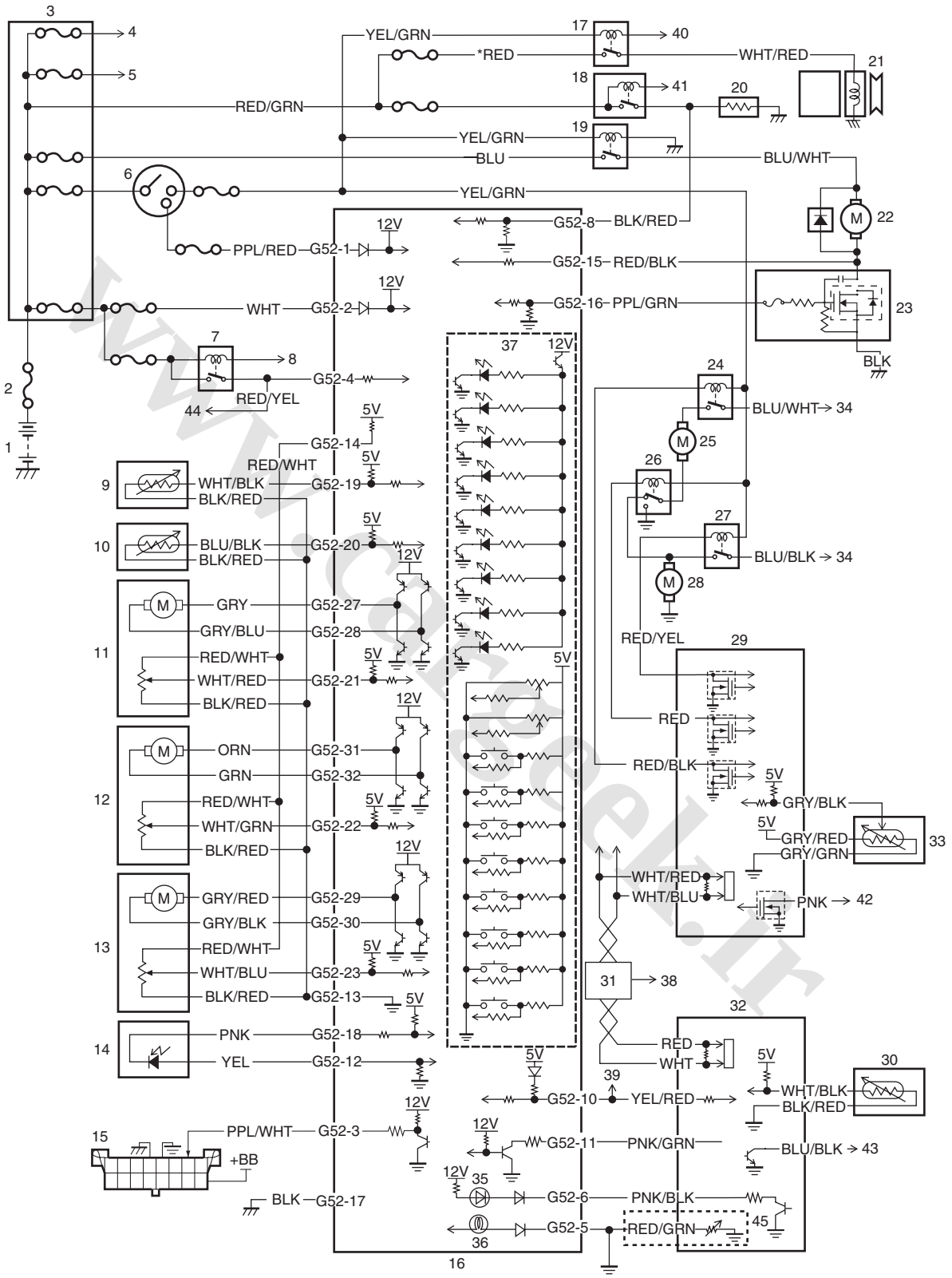


I5JB0A720007-05

www.cargeek.ir

 www.CarGeek.ir

| | | |
|---|---|---|
| 1. Battery | 17. Compressor relay | 33. Refrigerant pressure sensor |
| 2. Main fuse | 18. Rear defogger relay | 34. To fuse box |
| 3. Fuse box | 19. Blower motor relay | 35. Alarm indicator |
| 4. To radiator fan relay No.1 | 20. Rear defogger | 36. Illumination lamp |
| 5. To radiator fan relay No.3 | 21. A/C compressor | 37. Indicator lamp, switch, selector |
| 6. Ignition switch | 22. Blower motor | 38. To wheel speed sensor |
| 7. Small lamp relay | 23. Blower motor selector | 39. To information display |
| 8. To BCM | 24. Radiator fan relay No.1 | 40. To ECM |
| 9. Evaporator temperature sensor | 25. Radiator fan No.1 | 41. To BCM |
| 10. Inside air temperature sensor | 26. Radiator fan relay No.2 | 42. To compressor relay |
| 11. Temperature control actuator | 27. Radiator fan relay No.3 | 43. To rear defogger relay |
| 12. Air intake control actuator | 28. Radiator fan No.2 | 44. To combination switch |
| 13. Air flow control actuator | 29. BCM | 45. AUTO-ON head light system vehicle |
| 14. Sunload sensor | 30. Outside temperature sensor | *: M16 engine model |
| 15. Data link connector | 31. ABS control module | |
| 16. HVAC control module | 32. ECM | |

# Component Location

## Major Components of A/C System

S5JB0A7203002

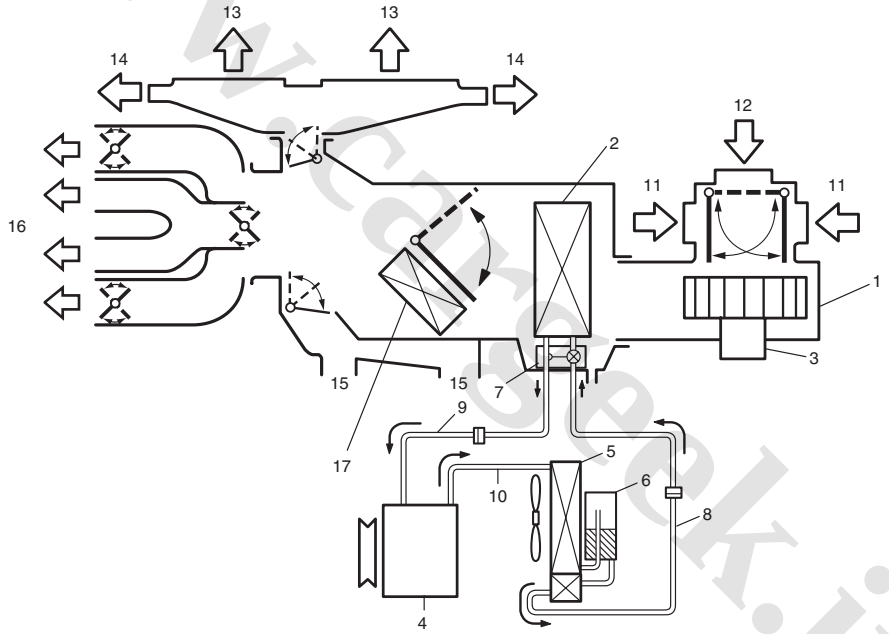


I5JB0A720008-02

| | | |
|---|---|---|
| 1. HVAC unit | 7. Expansion valve | 13. Defroster air |
| 2. Evaporator | 8. Liquid pipe | 14. Demister air |
| 3. Blower fan motor | 9. Suction pipe | 15. Foot air |
| 4. Compressor | 10. Discharge pipe | 16. Ventilation air |
| 5. Condenser assembly | 11. Recirculation air | 17. Heater core |
| 6. Receiver / dryer | 12. Fresh air | |

www.cargeek.ir

www.CarGeek.ir


## A/C Control System Components Location

S5JB0A7203001

**NOTE**

**The figure shows left-hand steering vehicle. For right-hand vehicle, parts with (*) are installed at the opposite side.**

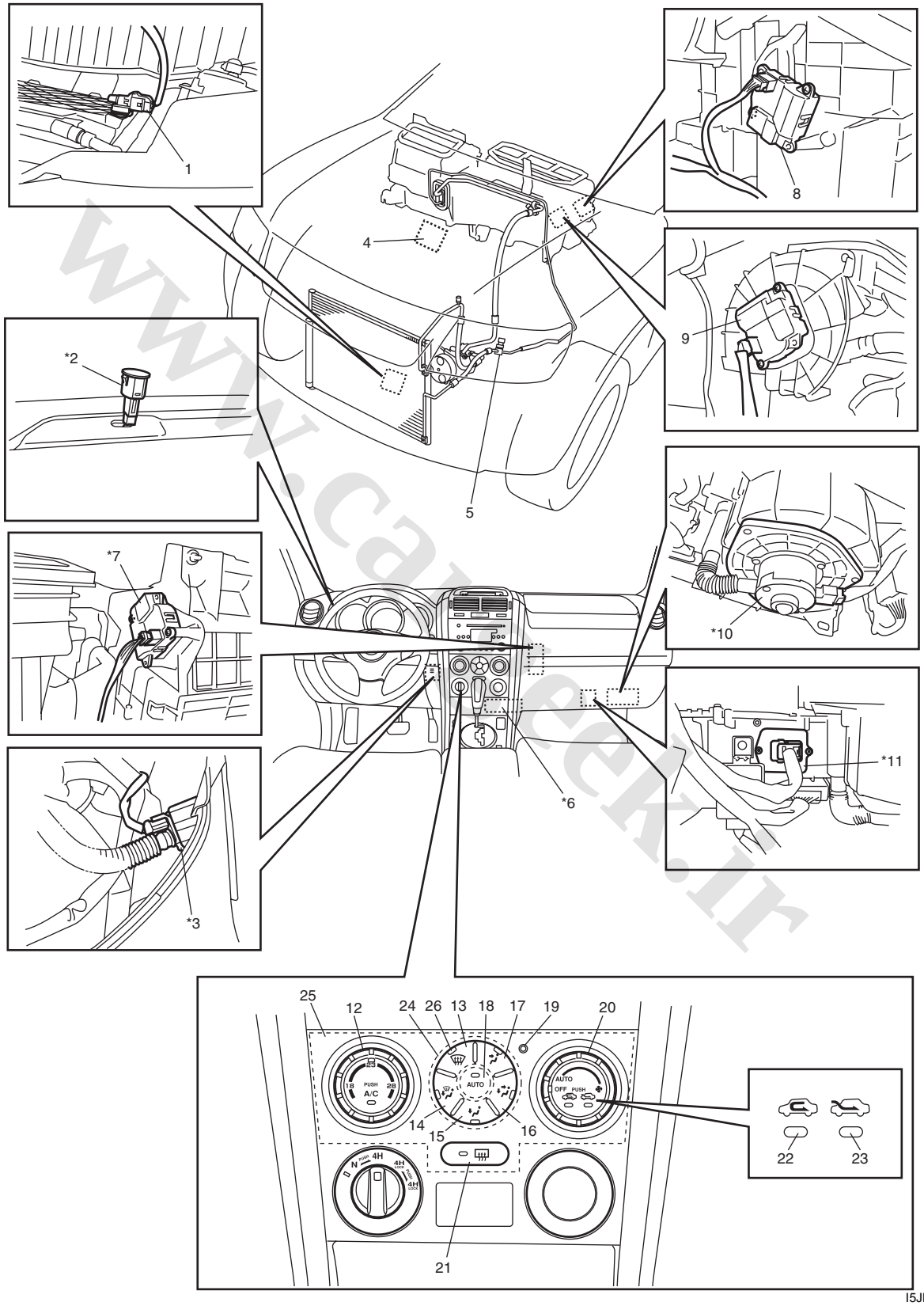


I5JB0A720009-05

www.cargeek.ir

 www.CarGeek.ir

| | | |
|---|---|---|
| 1. Outside temperature sensor | 10. Blower motor | 19. Alarm indicator |
| 2. Sunload sensor | 11. Blower motor controller | 20. Blower speed selector / Air intake selector |
| 3. Inside temperature sensor | 12. Temperature selector / A/C switch | 21. Rear defogger switch |
| 4. ECT sensor | 13. “DEF” switch | 22. “REC” indicator lamp |
| 5. Refrigerant pressure sensor | 14. “DEF / FOOT” switch | 23. “FRE” indicator lamp |
| 6. Evaporator temperature sensor | 15. “FOOT” switch | 24. MODE selector |
| 7. Air intake control actuator | 16. “BI-LEVEL” switch | 25. HVAC control module (vehicle with A/C) |
| 8. Temperature control actuator | 17. “VENT” switch | 26. “DEF” indicator lamp |
| 9. Air flow control actuator | 18. “AUTO” switch | |

# Diagnostic Information and Procedures

## Air Conditioning System Check

S5JB0A7204007

To ensure that system diagnosis is done accurately and smoothly, read “Precautions in Diagnosing Trouble: ” and follow “Air Conditioning System Check: ”.

| Step | Action | Yes | No |
|---|---|---|---|
| 1 | ☞ **Customer complaint analysis**<br>1) Perform “Customer Complaint Analysis”.<br>*Was customer complaint analysis performed according to instruction?* | Go to Step 2. | Perform customer complaint analysis. |
| 2 | ☞ **Visual inspection**<br>1) Perform “Visual Inspection”.<br>*Is there any faulty condition?* | Repair or replace malfunction part. | Go to Step 3. |
| 3 | ☞ **DTC check**<br>1) Perform “DTC Check”.<br>*Is it malfunction code?* | Go to Step 4. | Go to Step 5. |
| 4 | ☞ **Troubleshooting for DTC**<br>1) Check and repair according to DTC diag. flow.<br>*Are check and repair completed?* | Go to Step 7. | Check and repair malfunction part(s). |
| 5 | ☞ **Check for intermittent problem**<br>1) Check for intermittent problem.<br>*Is there faulty condition?* | Repair or replace malfunction part(s). | Go to Step 6. |
| 6 | ☞ **Air conditioning system symptom diagnosis**<br>1) Inspect and repair referring to “A/C System Symptom Diagnosis: ”.<br>*Are inspect and repair complete?* | Go to Step 7. | Inspect and repair malfunction part(s). |
| 7 | ☞ **Final confirmation test**<br>1) Perform DTC check.<br>*Is there any DTC?* | Go to Step 4. | Air Conditioning system is good condition. |

www.cargeek.ir

www.CarGeek.ir


**Customer Complaint Analysis**
Record details of the problem (failure, complaint) and how it occurred as described by the customer.
For this purpose, use of such a questionnaire form as shown in the figure will facilitate collecting information to the point required for proper analysis and diagnosis.

**Customer questionnaire (example)**

| | | | |
|---|---|---|---|
| Customer's Name: | Model: | VIN: | |
| Date of Issue: | Date Reg. | Date of Problem: | Mileage: |
| | | | |
| Problem Symptoms | • "FRE" indicator lamp abnormal: fails to turn ON / fails to go OFF / flashes<br>• Abnormal noise while "A/C" switch is turned ON: from compressor, from radiator fan motor, other_____<br>• Cool air does not come out:<br>• Radiator fan motor does not work:<br>• A/C compressor does not work:<br>• Blower fan motor does not work: | | |
| Frequency of Occurrence | • Continuous / Intermittent (_____ times a day, a month) / other_____ | | |
| Conditions for Occurrence of Problem | • Vehicle at stop & A/C compressor is working:<br>• For some time after A/C switch is ON:<br>• When outside air temperature is high:<br>• When outside air temperature is low:<br>• All the time: | | |
| Environmental Condition | • Weather: fair / cloudy / rain / snow / other_____<br>• Temperature: _____ °F (_____ °C) | | |
| DTC | • First check: Normal code / malfunction code (_____)<br>• Second check: Normal code / malfunction code (_____) | | |

**NOTE**

**The form is a standard sample. It should be modified according to conditions characteristic of each market.**

**Visual Inspection**
As a preliminary step, be sure to perform visual check of the items that support proper function of the air conditioning system referring to "Visual Inspection: ".

**DTC Check**
Refer to "DTC Check: " for checking procedure.

**Troubleshooting for DTC**
Based on the DTC indicated in Step 4 and referring to applicable DTC flow, locate the cause of the trouble, namely in a sensor, actuator, wire harness, connector, HVAC control module or other part and repair or replace faulty parts.

**Check for Intermittent Problem**
Check parts where an intermittent trouble is easy to occur (e.g., wire harness, connector, etc.), referring to "Intermittent and Poor Connection Inspection:  in Section 00".

**Air Conditioning System Symptom Diagnosis**
Check the parts or system suspected as a possible cause referring to "A/C System Symptom Diagnosis: ".

**Final Confirmation Test**
Confirm that the problem symptom has gone and the air conditioning system is free from any abnormal conditions. If what has been repaired is related to the malfunction DTC, check DTC once and confirm that no DTC is indicated.

www.cargeek.ir

www.CarGeek.ir

## DTC Check

S5JB0A7204028

**NOTE**

**To know how to use SUZUKI scan tool in detail, refer to its operator's manual.**

### Using SUZUKI Scan Tool

1) Turn ignition switch to OFF position.
2) Connect SUZUKI scan tool to data link connector (DLC) (1) located on underside of instrument panel.

**Special tool**
**(A): SUZUKI scan tool**

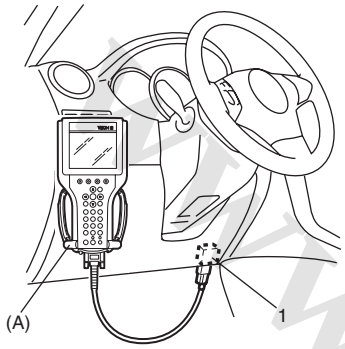


I5JB0A720014-01

3) Apply light to sunload sensor vertically, holding incandescent lamp of approximately 100 W about 100 mm (3.94 in.) away from sunload sensor.

**NOTE**

**If B1504 is detected when vehicle is not exposed to light (indoor, etc.), check again for DTC with light from incandescent lamp applied to sunload sensor, referring to "Sunload Sensor Inspection: ". If B1504 is not detected in this check, sunload sensor is in good condition.**

4) Turn ignition switch to ON position.
5) Read DTC according to instructions displayed on SUZUKI scan tool and print it or write it down. Refer to SUZUKI scan tool operator's manual for further details.
   If communication between scan tool and ECM (PCM) is not possible, check if scan tool is communicable by connecting it to ECM (PCM) in another vehicle. If communication is possible in this case, scan tool is good condition. Then check data link connector and serial data line (circuit) in the vehicle with which communication was not possible.
6) After completing the check, turn ignition switch OFF position and disconnect SUZUKI scan tool from data link connector (DLC).

### Not Using SUZUKI Scan Tool

**NOTE**

**If B1504 is detected when vehicle is not exposed to light (indoor, etc.), check again for DTC with light from incandescent lamp applied to sunload sensor, referring to "Sunload Sensor Inspection: ". If B1504 is not detected in this check, sunload sensor is in good condition.**

1) Apply light to sunload sensor vertically, holding incandescent lamp of approximately 100 W about 100 mm (3.94 in.) away from sunload sensor.
2) Set the following selectors to specified positions respectively with turn ignition switch OFF.
   - Temperature selector (1): max cool position
   - Blower speed selector (2): "OFF" position
3) While pressing "B/L" (BI-LEVEL) switch (3) and "D/F" (defogger foot) switch (4) simultaneously turn ignition switch to ON position.

**NOTE**

**For 15 seconds after ignition switch is turned on, both "REC" indicator lamp and "FRE" indicator lamp light for in-system trouble check.**

4) Read DTC from flashing pattern of "FRE" indicator (5) and "REC" indicator (6) referring to "DTC Table: ".

**NOTE**

- **Pressing "DEF" switch (7) alternates display of current DTC and history DTC.**
- **"DEF" indicator lamp (8) remains off when display is in current DTC mode and it lights up when display is in history DTC mode.**

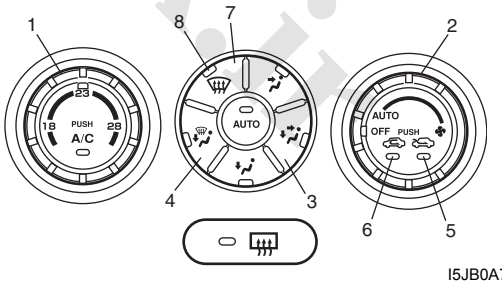


I5JB0A720015-01

www.cargeek.ir

www.CarGeek.ir


5) After completing above check, turn ignition switch to "OFF" position.

**NOTE**

**HVAC control module returns to a original state at the following conditions.**

- **Ignition switch turned to "OFF" position**
- **Temperature selector is operated**
- **Blower speed selector is operated**
- **5 minutes have passed since HVAC control unit started DTC display**

## DTC Clearance

S5JB0A7204029

### Using SUZUKI Scan Tool

1) Turn ignition switch to OFF position.
2) Connect SUZUKI scan tool to data link connector (DLC) (1).

**Special tool**
**(A): SUZUKI scan tool**

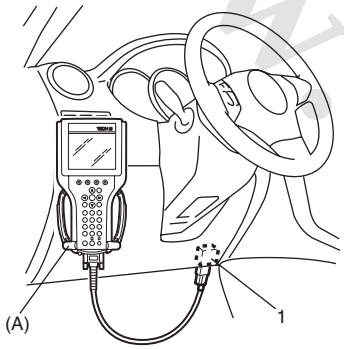


I5JB0A720014-01

3) Turn ignition switch to ON position.
4) Erase DTC according to instructions displayed on SUZUKI scan tool. Refer to SUZUKI scan tool operator's manual for further details.
5) After completing the clearance, turn ignition switch to OFF position and disconnect SUZUKI scan tool from DLC.
6) Perform "DTC Check: " and confirm if normal DTC (NO CODES) is displayed.

### Not Using SUZUKI Scan Tool

1) Display history DTC by HVAC control module referring to "Not Using SUZUKI Scan Tool" under "DTC Check: ".
2) Confirm display DTC and light "DEF" indicator lamp (1).
3) Push "DEF" switch (2) at 5 seconds or more.

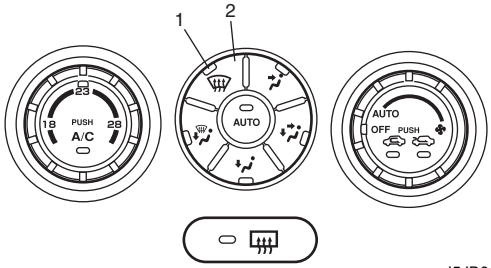


I5JB0A720016-01

4) After completing the clearance, turn ignition switch OFF position.
5) Perform "DTC Check: ", and confirm if normal DTC is displayed and if any other DTC is detected.

## DTC Table

S5JB0A7204030

**⚠ CAUTION**

**Be sure to perform "Air Conditioning System Check: " before starting diagnosis.**

| DTC No. (displayed on SUZUKI scan tool) | DTC (indicated on HVAC control module) | | Priority of display | Diagnosis | |
|---|---|---|---|---|---|
| | Indicated by "REC" indicator lamp | Indicated by "FRE" indicator lamp | | | |
| ☞ B1562 | 1 | 4 | 1 | Outside air temperature sensor and/or its circuit malfunction | Data error |
| ☞ B1502 | 2 | 1 | 2 | Inside air temperature sensor and/or its circuit malfunction | Open |
| | | 2 | 3 | | Short |
| ☞ B1503 | 3 | 1 | 4 | Evaporator temperature sensor and/or its circuit malfunction | Open |
| | | 2 | 5 | | Short |
| ☞ B1504 | 4 | 1 | 29 | Sunload sensor and/or its circuit malfunction | Open |
| | | 2 | 6 | | Short |
| ☞ B1561 | 5 | 4 | 7 | Engine coolant temperature sensor and/or its circuit malfunction | Data error |

www.cargeek.ir

 www.CarGeek.ir

| DTC No. (displayed on SUZUKI scan tool) | DTC (indicated on HVAC control module) | | Priority of display | Diagnosis | |
|---|---|---|---|---|---|
| | Indicated by "REC" indicator lamp | Indicated by "FRE" indicator lamp | | | |
| ☞ B1511 | 6 | 1 | 8 | Temperature control actuator (position sensor) and/or its circuit malfunction | Open |
| | | 2 | 9 | | Short |
| ☞ B1513 | | 3 | 10 | Temperature control actuator and/or its circuit malfunction | Lock detect |
| ☞ B1512 | 7 | 1 | 11 | Air flow control actuator (position sensor) and/or its circuit malfunction | Open |
| | | 2 | 12 | | Short |
| ☞ B1514 | | 3 | 13 | Air flow control actuator and/or its circuit malfunction | Lock detect |
| ☞ B1530 | 8 | 1 | 14 | Air intake control actuator (position sensor) and/or its circuit malfunction | Open |
| | | 2 | 15 | | Short |
| ☞ B1531 | | 3 | 16 | Air intake control actuator and/or its circuit malfunction | Lock detect |
| ☞ B1551 | 9 | 1 | 17 | Serial communication circuit malfunction | Open |
| | | 2 | 18 | | Short |
| ☞ B1552 | | 4 | 19 | | Data error |
| ☞ B1553 | 10 | 4 | 20 | CAN communication circuit malfunction | Data error |
| ☞ B1557 | 11 | 4 | 21 | Wheel speed sensor and/or its circuit malfunction | Data error |
| ☞ B1556 | 12 | 4 | 22 | Camshaft position (CMP) sensor and/or its circuit malfunction | Data error |
| ☞ B1563 | 13 | 4 | 23 | A/C refrigerant pressure sensor and/or its circuit malfunction | Data error |
| ☞ B1546 | | 5 | 24 | A/C refrigerant pressure sensor malfunction | Refrigerant pressure malfunction |
| ☞ B1520 | 15 | 1 | 25 | Temperature selector malfunction | Open |
| | | 2 | 26 | | Short |
| ☞ B1521 | 16 | 1 | 27 | Blower speed selector malfunction | Open |
| | | 2 | 28 | | Short |
| — | See NOTE below | | — | Normal | — |

**NOTE**

**When no abnormality is detected, "FRE" indicator lamp and "REC" indicator lamp repeat cycle of ON for 2 seconds and OFF for 1 second.**

www.cargeek.ir

### Example of “REC” Indicator Lamp Flashing Pattern

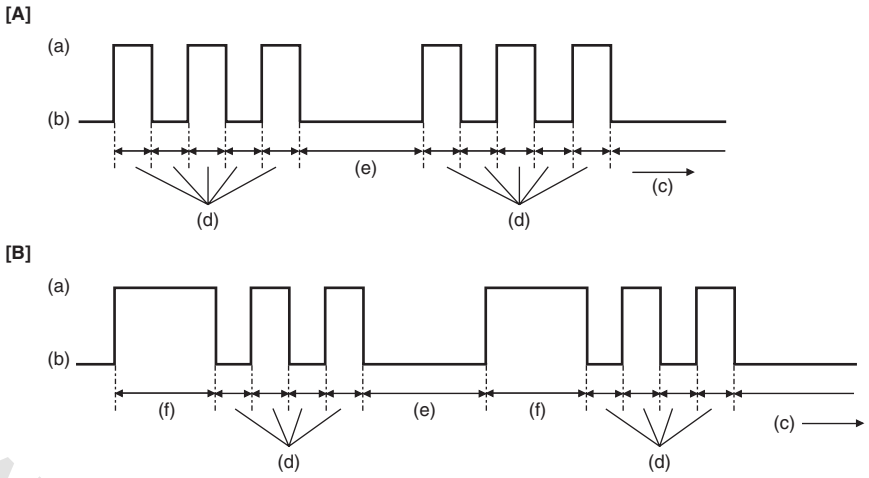


I5JB0A720017-01

| | | |
|---|---|---|
| [A]: B1503 (No.3) | (b): “REC” indicator lamp “OFF” | (e): 2.0 (sec.) |
| [B]: B1556 (No.12) | (c): Time (sec.) | (f): 1.5 (sec.) |
| (a): “REC” indicator lamp “ON” | (d): 0.5 (sec.) | |

### Example of “FRE” Indicator Lamp Flashing Pattern

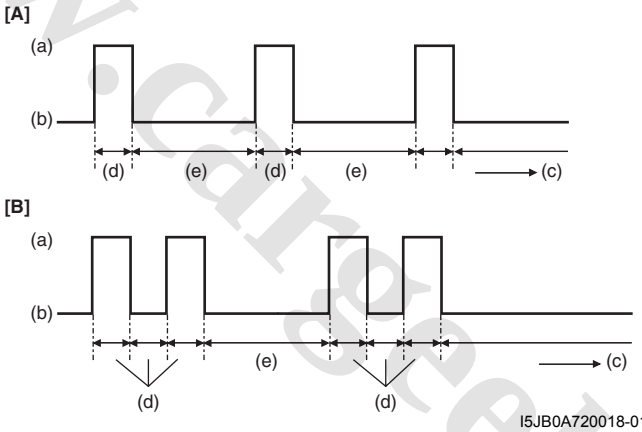


I5JB0A720018-01

| | | |
|---|---|---|
| [A]: Open | (b): “FRE” indicator lamp “OFF” | (e): 2.0 (sec.) |
| [B]: Short | (c): Time (sec.) | |
| (a): “FRE” indicator lamp “ON” | (d): 0.5 (sec.) | |

**NOTE**

**Locked actuator, data error and refrigerant pressure malfunction are indicated by flashing pattern of “FRE” indicator lamp specified for each of them.**

### Display Timing of “FRE” Indicator Lamp and “REC” Indicator Lamp

Code with short display time waits until display of code with long display time is over.

www.cargeek.ir

 www.CarGeek.ir

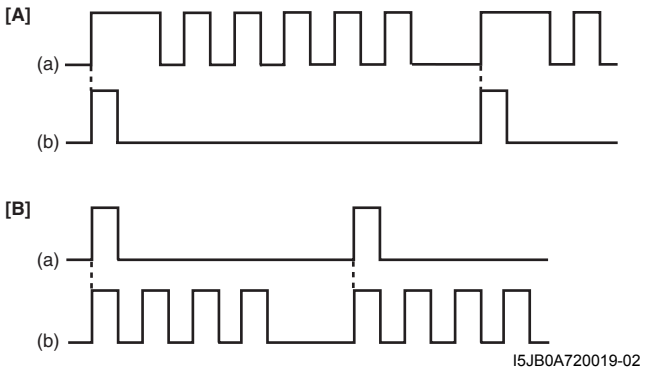


| | |
|---|---|
| [A]: B1520 (15 – 1) | (a): "REC" indicator flashing pattern |
| [B]: B1562 (1 – 4) | (b): "FRE" indicator flashing pattern |

## Fail-Safe Table

S5JB0A7204031

When any of the following malfunctions (DTCs) is detected, HVAC control module enters fail-safe mode. However, when HVAC control module detects normal operation of A/C system, fail-safe mode is canceled.

| DTC No. | Trouble Area | Fail-Safe Operation | |
|---|---|---|---|
| | | When ignition switch is turned ON after malfunction is already detected | When malfunction is detected during ignition switch is ON |
| ☞ B1502 | Inside air temperature sensor and/or its circuit malfunction | HVAC control module controls actuators assuming that inside air temperature is 25 °C (77 °F). | |
| ☞ B1503 | Evaporator temperature sensor and/or its circuit malefaction | HVAC control module controls actuators assuming that amount of evaporator temperature is –6 °C (21.2 °F). | |
| ☞ B1504 | Sunload sensor and/or its circuit malfunction | HVAC control module controls actuators assuming that amount of sunlight is 0 W/m². | |
| ☞ B1511 | Temperature control actuator (position sensor) and/or its circuit malfunction | Circuit open: Temperature control actuator fixed to "MAX HOT" position.<br>Circuit short: Temperature control actuator fixed to "MAX COOL" position. | |
| ☞ B1512 | Air flow control actuator (position sensor) and/or its circuit malfunction | Circuit open: Air flow control actuator fixed to "DEF" position.<br>Circuit short: Air flow control actuator fixed to "VENT" position. | |
| ☞ B1513 | Temperature control actuator and/or its circuit malfunction | Stop the operation of temperature control actuator. | |
| ☞ B1514 | Air flow control actuator and/or its circuit malfunction | Stop the operation of Air flow control actuator. | |
| ☞ B1520 | Temperature selector malfunction | HVAC control module keeps condition just before malfunction is detected. | HVAC control module controls actuators assuming that setting of temperature selector is 23 °C (73.4 °F). |
| ☞ B1521 | Blower speed selector malfunction | HVAC control module keeps condition just before malfunction is detected. | HVAC control module controls actuators assuming that as follows.<br>• Blower speed is minimum.<br>• Air flow control actuator fixed to "DEF" position. |
| ☞ B1530 | Air intake control actuator (position sensor) and/or its circuit malfunction | Circuit open: Air intake control actuator fixed to "FRE" position.<br>Circuit short: Air intake control actuator fixed to "REC" position. | |
| ☞ B1531 | Air intake control actuator and/or its circuit malfunction | Stop the operation of temperature control actuator. | |

www.cargeek.ir

www.CarGeek.ir


| DTC No. | Trouble Area | Fail-Safe Operation | |
|---|---|---|---|
| | | When ignition switch is turned ON after malfunction is already detected | When malfunction is detected during ignition switch is ON |
| ☞ B1551 | Serial communication circuit malfunction | HVAC control module keeps condition just before malfunction is detected. | HVAC control module controls actuators assuming that as follows.<br>• Outside air temperature is 20 °C (68 °F).<br>• Engine coolant temperature is 90 °C (194 °F).<br>• Vehicle speed is 0 km/h (0 mph).<br>• Engine speed is 0 rpm. |
| ☞ B1552 | | | |
| ☞ B1553 | CAN communication circuit malfunction | | |
| ☞ B1556 | Camshaft position (CMP) sensor and/or its circuit malfunction | HVAC control module keeps condition just before malfunction is detected. | HVAC control module controls actuators assuming that amount of engine speed is 0 rpm. |
| ☞ B1557 | Vehicle speed sensor and/ or its circuit malfunction | HVAC control module keeps condition just before malfunction is detected. | HVAC control module controls actuators assuming that amount of vehicle speed is 0 km/h (0 mph). |
| ☞ B1561 | Engine coolant temperature sensor and/or its circuit malfunction | HVAC control module keeps condition just before malfunction is detected. | HVAC control module controls actuators assuming that amount of engine coolant temperature is 90 °C (194 °F). |
| ☞ B1562 | Outside air temperature sensor and/or its circuit malfunction | HVAC control module keeps condition just before malfunction is detected. | HVAC control module controls actuators assuming that amount of outside air temperature is 20 °C (68 °F). |

## Scan Tool Data

S5JB0A7204032

As the data values given below are standard values estimated on the basis of values obtained from the normally operating vehicles by using a scan tool, use them as reference values. Even when the vehicles are in good condition, there may be cases where the checked values do not fall within each specifies data range. Therefore, judgement as abnormal should not be made by checking with these data alone.

| Scan Tool Data | Condition | Normal Condition / Reference Value |
|---|---|---|
| ☞ TEMP CONT SWITCH | Each reference value is relative to the position of temperature selector of HVAC control module. | Max Cool, 18 °C (64.4 °F) – 28 °C (82.4 °F), Max Hot |
| ☞ CABIN TEMPERATURE | Reference value is relative to in car temperature. | –40 °C – 87.5 °C (–40 °F – 189.5 °F) |
| ☞ OUT SIDE AIR TEMP | Reference value is relative to outside air temperature. | –40 °C – 87.5 °C (–40 °F – 189.5 °F) |
| ☞ EVAPORATOR TEMP | Reference value is relative to temperature of evaporator. | –40 °C – 87.5 °C (–40 °F – 189.5 °F) |
| ☞ COOLANT TEMP | At specified idle speed after warming up | –40 °C – 215 °C (–40 °F – 419 °F) |
| ☞ SUN LOAD | Reference value depends on the situation. | 0 W/m² – 4447.8 W/m² |
| ☞ MODE CONT SWITCH | Each reference value is relative to the position of airflow selector of HVAC control module. | AUTO, VENT, BI-LEVEL, FOOT, DEF-FOOT DEF |
| ☞ FAN CONT SWITCH | Each reference value is relative to the position of blower speed selector of HVAC control module. | AUTO, OFF 1st, 2nd – 7th, 8th |
| ☞ FAN DESIRE VOLT | Reference value is relative to the position of blower speed selector of HVAC control module. | 0 – 16.0 V |
| ☞ AIR MIX POS SENSOR | Reference value is relative to the position of temperature selector of HVAC control module. | Approx. 1.5 V (Max Hot) |
| | | Approx. 4.5 V (Max Cool) |
| ☞ R/F POS SENSOR | Reference value is relative to the position of air intake selector of HVAC control module. (LH steering vehicle) | Approx. 4.0 V (REC) |
| | | Approx. 0.9 V (FRE) |
| ☞ R/F POS SENSER | Reference value is relative to the position of air intake selector of HVAC control module. (RH steering vehicle) | Approx. 0.9 V (REC) |
| | | Approx. 4.0 V (FRE) |

www.cargeek.ir

 www.CarGeek.ir

| Scan Tool Data | Condition | | Normal Condition / Reference Value |
|---|---|---|---|
| ☞ MODE POS SENSOR | Reference value is relative to the position of airflow selector of HVAC control module. | | Approx. 0.5 V (DEF) |
| | | | Approx. 4.5 V (VENT) |
| ☞ A/C CONT SIG | A/C system is ON. | | ON |
| | A/C system is OFF. | | OFF |
| ☞ AIR INTAKE MODE | Fresh air (FRE) mode is activated. | | FRE |
| | Recirculation air (REC) mode is activated. | | REC |
| | AUTO mode is activated. | | AUTO |
| ☞ A/C COMP CLUCH | Magnet clutch is engaged. | | ON |
| | Magnet clutch is not engaged. | | OFF |
| ☞ REFRIGERANT PRESSURE | Engine running. | A/C ON (A/C is operating) at ambient temperature: 30 °C (86 °F) | 1350 – 1650 kPa for more details, refer to pressure of high pressure gauge under “A/C System Performance Inspection: ”. |
| | | A/C ON (A/C is not operating) at ambient temperature: 30 °C (86 °F) and engine coolant temperature: 90 °C – 100 °C (194 °F – 212 °F) | 600 – 1000 kPa after longer than 10 min from A/C switch turned off. |
| ☞ A/C INDICATOR LAMP | A/C indicator lamp is lighted. | | ON |
| | A/C indicator lamp is not lighted. | | OFF |
| ☞ FRE INDICATOR LAMP | Fresh air (FRE) indicator lamp is lighted. | | ON |
| | Fresh air (FRE) indicator lamp is not lighted. | | OFF |
| ☞ REC INDICATOR LAMP | Recirculation air (REC) indicator lamp is lighted. | | ON |
| | Recirculation air (REC) indicator lamp is not lighted. | | OFF |
| ☞ REAR DEF INDICATOR | Rear defogger indicator lamp is lighted. | | ON |
| | Rear defogger indicator lamp is not lighted. | | OFF |
| ☞ VEHICLE SPEED | At stop. | | 0 km/h (0 mph) |
| ☞ ENGINE SPEED | At engine idle speed | | Engine idle speed is display |

**Scan Tool Data Definitions**

**TEMP CONT SWITCH:** Position of temperature control selector of HVAC control module

**CABIN TEMPERATURE:** In-car temperature detected by inside air temperature sensor installed in HVAC control module

**OUTSIDE AIR TEMP (OUTSIDE AIR TEMPERATURE):** Outside air temperature detected by outside air temperature sensor installed in front bumper member

**EVAPORATOR TEMP:** Temperature of air passed through evaporator

**COOLANT TEMP:** Engine coolant temperature detected by engine coolant temperature sensor

**SUN LOAD:** Amount of sunlight detected by sunload sensor installed on the driver side on the dashboard

**MODE CONT SWITCH:** Position of airflow selector of HVAC control module

**FAN CONT SWITCH:** Position of air speed selector of HVAC control module

**FAN DESIRE VOLT:** Voltage for blower motor

**AIR MIX POS SENSOR:** Input signal from position sensor in temperature control actuator

**MODE POS SENSOR:** Input signal form position sensor in air flow control actuator

**R/F POS SENSOR (AIR FLOW CONTROL ACTUATOR POSITION SENSOR):** Input signal from position sensor in air intake control actuator

**A/C CONT SIG (ON or OFF):** State of A/C indicator lamp

**AIR INTAKE MODE (FRE, REC or MIX):** State of air intake mode

**A/C COMP CLUCH:** State of magnet clutch

**REFRIGERANT PRESSURE (A/C REFRIGERANT ABSOLUTE PRESSURE):** This parameter indicates A/C refrigerant absolute pressure calculated by ECM

**A/C INDICATOR LAMP (ON or OFF):** State of A/C indicator lamp

**FRE INDICATOR LAMP (ON or OFF):** State of fresh air (FRE) indicator lamp

**REC INDICATOR LAMP (ON or OFF):** State of recirculation air (REC) indicator lamp

**REAR DEF INDICATOR (ON or OFF):** State of rear defogger indicator lamp

**VEHICLE SPEED:** It is computed based on pulse signals from vehicle speed sensor

**ENGINE SPEED:** It is computed by signal from CMP sensor

www.cargeek.ir

www.CarGeek.ir


## Visual Inspection

S5JB0A7204008

Visually check the following parts and systems.

| Inspection Item | Correction |
|---|---|
| • Refrigerant ---- leakage and amount<br>• A/C pipe or hose ---- disconnection, looseness and deterioration<br>• A/C compressor drive belt ---- looseness and damage<br>• Battery ---- fluid level and corrosion of terminal<br>• Connectors of electric wire harness ---- disconnection and friction<br>• Fuses ---- burning<br>• Parts ---- installation and damage<br>• Other parts that can be checked visually | Refer to “A/C Compressor Drive Belt Inspection and Adjustment: ”. |

## A/C System Performance Inspection

S5JB0A7204027

1) Confirm that vehicle and environmental conditions are as follows.
   - Vehicle is put indoors.
   - Ambient air temperature is within 15 – 35 °C (59 – 95 °F).
   - Relative humidity is within 30 – 70%.
   - There is no wind indoors.
   - HVAC unit is normal condition.
   - There is no air leakage from air ducts.
   - Condenser fins are clean.
   - Are filter is not clogged with dirt and dust.
   - Battery voltage is 12 V or more.
   - Radiator cooling fan operates normally.
2) Make sure that high pressure valve (1) and low pressure valve (2) of manifold gauge (3) are firmly closed.
3) Connect high pressure charging hose (4) to high pressure service valve (5) on vehicle, and connect low pressure charging hose (6) to low pressure service valve (7) on vehicle.
4) Bleed the air in charging hoses by loosening their respective nuts on manifold gauge, utilizing the refrigerant pressure. When a hiss is heard, immediately tighten nut.

**⚠ CAUTION**

**Do not interchange high and low pressure charging hoses by mistake.**

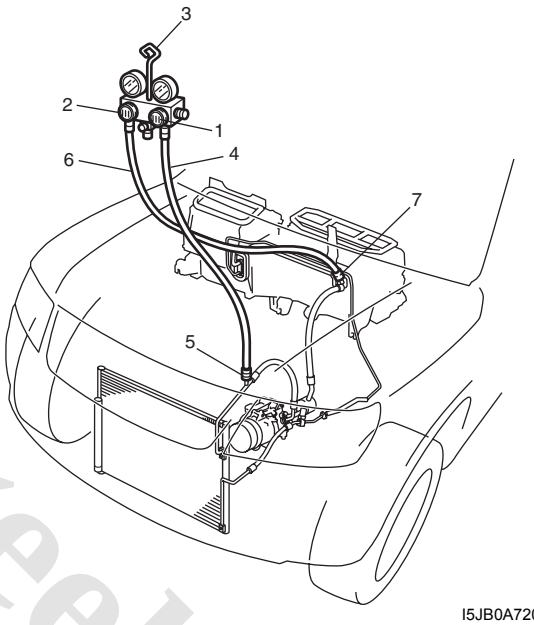


I5JB0A720010-01

5) Warm up engine to normal operating temperature (engine coolant temperature at 80 – 90 °C (176 – 194 °F)) and keep it at specified idle speed.
6) Operate A/C at the following conditions.
   - A/C switch at ON position
   - Blower speed selector at max position
   - Air flow selector at “VENT” position
   - Temperature selector at max cool position
   - Vehicle door at all open
   - Air inlet door at recirculation position

www.cargeek.ir

 www.CarGeek.ir

7) Wait for ten minutes to stabilize A/C operation.
8) Keep all windows, doors and engine food open.
9) With about 20 mm (0.8 in.) of dry bulb thermometer (1) put right in front of center ventilation louver and a wet and dry bulb thermometer (2) near air inlet (3) of HVAC unit.

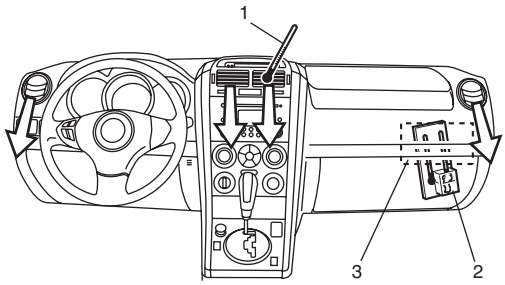

I5JB0A720011-01

10) Check for each pressure of low side and high side if it is within shaded range of graph. If each gauge reading is out of specified pressure, correct defective part referring to the table.

**Low side and high side pressure example, gauges should read as follows when ambient temperature is 30 °C (86 °F)**

**M16 engine model**
**Pressure on high pressure gauge (HI): 1150 – 1410 kPa (11.5 – 14.1 kg/cm², 164 – 201 psi)**
**Pressure on high pressure gauge (LO): 280 – 410 kPa (2.8 – 4.1 kg/cm², 40 – 58 psi)**
**J20 engine model**
**Pressure on high pressure gauge (HI): 1300 – 1630 kPa (13.0 – 16.3 kg/cm², 185 – 232 psi)**
**Pressure on high pressure gauge (LO): 250 – 370 kPa (2.5 – 3.7 kg/cm², 36 – 53 psi)**

**NOTE**

**Pressure registered on gauge varies with ambient temperature. Therefore, use the graphs when determining if pressures are normal or not.**

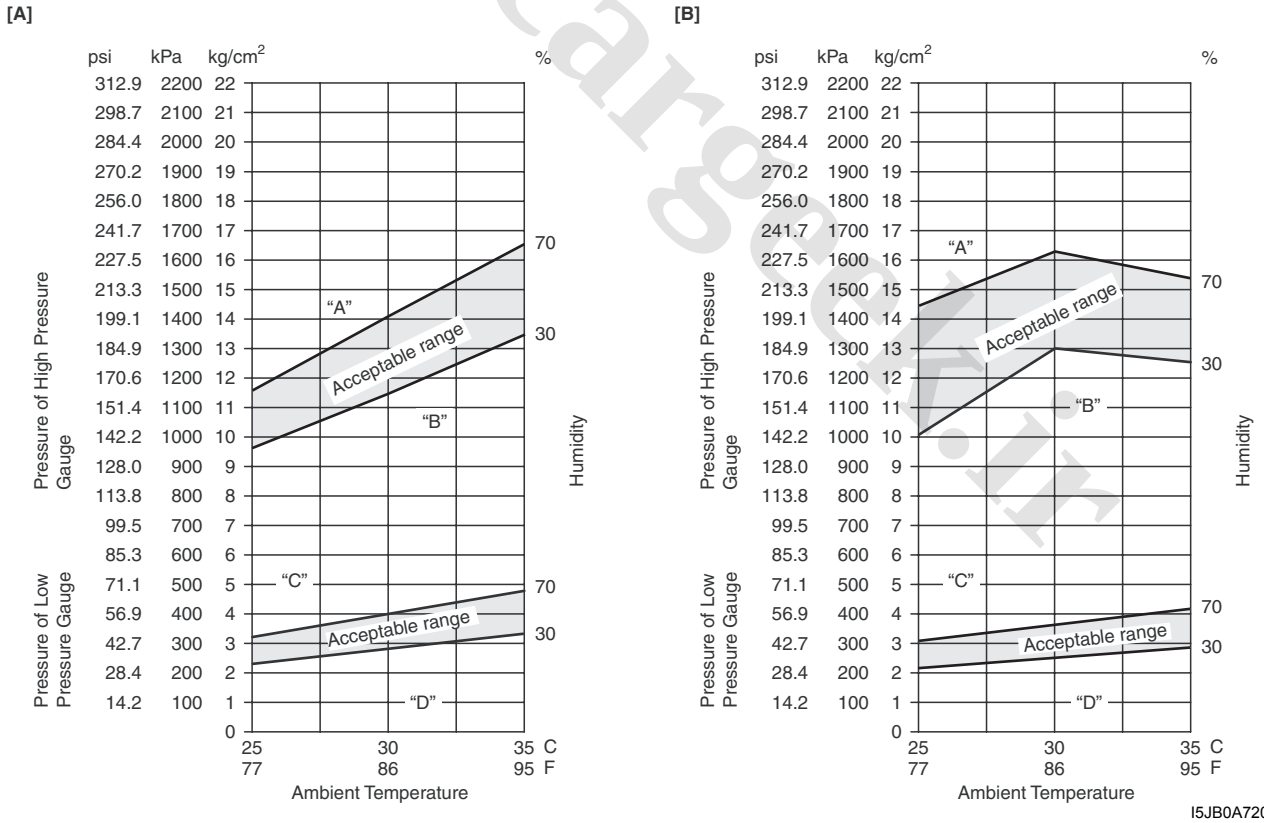

I5JB0A720012-04

| | |
|---|---|
| [A]: | M16 engine model |
| [B]: | J20 engine model |

www.cargeek.ir

www.CarGeek.ir


**High pressure gauge**

| Condition | Possible Cause | Correction |
|---|---|---|
| Pressure is higher than acceptable range (“A” area) | Refrigerant overcharged | Recharge. |
| | Expansion valve frozen or clogged | Check expansion valve. |
| | Clogged refrigerant passage of high side | Clean or replace. |
| | Radiator cooling fan malfunction (Insufficient cooling of condenser) | Check radiator cooling fan. |
| | Dirty or bent condenser fins (Insufficient cooling of condenser) | Clean or repair. |
| | Compressor malfunction (Insufficient oil etc.) | Check compressor. |
| | Engine overheat | Check engine cooling system referring to “Engine Cooling Symptom Diagnosis: in Section 1F”. |
| Pressure is lower than acceptable range (“B” area) | Insufficient refrigerant (Insufficient charge or leakage) | Check for leakage, repair if necessary and recharge. |
| | Expansion valve malfunction (valve opens too wide) | Check expansion valve. |
| | Compressor malfunction (Insufficient compression) | Check compressor. |

**Low pressure gauge**

| Condition | Possible Cause | Correction |
|---|---|---|
| Pressure is higher than acceptable range (“C” area) | Expansion valve malfunction (valve opens too wide) | Check expansion valve. |
| | Compressor malfunction (Insufficient compression) | Check compressor. |
| Pressure is lower than acceptable range (“D” area) | Insufficient refrigerant (Insufficient charge or leakage) | Check for leakage, repair if necessary and recharge. |
| | Expansion valve malfunction (valve opens too narrow) | Check expansion valve. |
| | Clogged refrigerant passage (crashed pipe) | Repair or replace. |

www.cargeek.ir

www.cargeek.ir

 www.CarGeek.ir

11) Check inlet port temperature-to-outlet port temperature relationship using graph.
For example, if A/C evaporator inlet port temperature is 25 °C (77 °F) and center ventilation louver temperature is 13 °C (55.4 °F), their crossing point is within acceptable range as shown in the graph in this case, cooling performance is satisfactory and proper.

12) If crossing point is out of acceptable range, diagnose trouble referring to the following table.

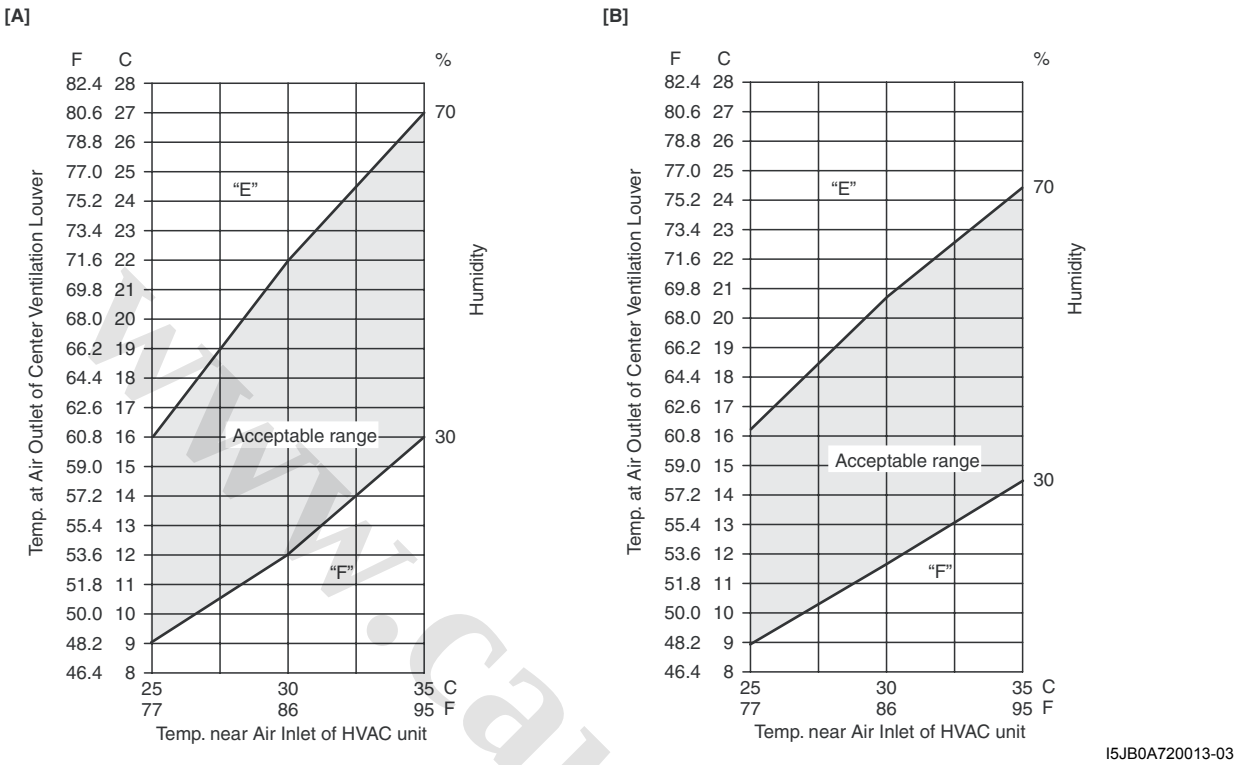


| | |
|---|---|
| [A]: | M16 engine model |
| [B]: | J20 engine model |

**Thermometer at center duct**

| Condition | Possible Cause | Correction |
|---|---|---|
| Crossing point is higher than acceptable range ("E" area) | Insufficient or excessive charge of refrigerant | Check refrigerant pressure. |
| | Dirty or bent A/C evaporator fins | Clean or repair. |
| | Air leakage from cooling (heater) unit or air duct | Repair or replace. |
| | Malfunctioning, switch over function of damper in cooling (heater) unit | Repair or replace. |
| | Compressor malfunction | Check compressor. |
| Crossing point is lower than acceptable range ("F" area) | Insufficient air volume from center duct (Heater blower malfunction) | Check blower motor and fan. |
| | Compressor malfunction | Check compressor. |

**NOTE**

**If ambient temperature is within 25 °C (77 °F), it is possible to diagnose A/C system in detail referring to the following table.**

www.cargeek.ir

| Condition | | | Possible Cause | Correction |
|---|---|---|---|---|
| Manifold Gauge | MPa (kg/cm²) (psi) | Detail | | |
| Lo | Hi | | | |
| M16 engine model<br>0.23 – 0.33<br>(2.3 – 3.3)<br>(33 – 47)<br>J20 engine model<br>0.22 – 0.31<br>(2.2 – 3.1)<br>(31 – 44) | M16 engine model<br>0.96 – 1.16<br>(9.6 – 11.6)<br>(136 – 165)<br>J20 engine model<br>1.10 – 1.45<br>(11.0 – 14.5)<br>(156 – 206) | Normal condition | — | — |
| Negative pressure | 0.5 – 0.6<br>(5 – 6)<br>(71.2 – 85.3) | The low pressure side reads a negative pressure, and the high pressure side reads an extremely low pressure.<br>Presence of frost around tubing to and from receiver/ dryer and expansion valve. | Dust particles or water droplets are either stuck or frozen inside expansion valve, preventing the refrigerant from flowing. | Clean expansion valve. Replace it if it cannot be cleaned.<br>Replace desiccant.<br>Evacuate the A/C system and recharge with fresh refrigerant. |
| Normal:<br>M16 engine model<br>0.23 – 0.33<br>(2.3 – 3.3)<br>(33 – 47)<br>J20 engine model<br>0.22 – 0.31<br>(2.2 – 3.1)<br>(31 – 44)<br>↑↓<br>Abnormal:<br>Negative pressure | Normal:<br>M16 engine model<br>0.96 – 1.16<br>(9.6 – 11.6)<br>(136 – 165)<br>J20 engine model<br>1.10 – 1.45<br>(11.0 – 14.5)<br>(156 – 206)<br>↑↓<br>Abnormal:<br>0.7 – 1.0<br>(7 – 10)<br>(100 – 142) | During A/C operation, the low pressure side sometimes indicates negative pressure, and sometimes normal pressure. Also high pressure side reading fluctuates between the abnormal and normal pressure. | Expansion valve is frozen due to moisture in the system, and temporarily shuts off the refrigeration cycle. | Replace expansion valve.<br>Replace desiccant.<br>Evacuate A/C system and recharge with fresh refrigerant. |
| 0.05 – 0.15<br>(0.5 – 1.5)<br>(4.2 – 21.3) | 0.7 – 1.0<br>(7 – 10)<br>(100 – 142) | Both low and high pressure sides indicate low readings. Output air is slightly cold. | Insufficient refrigerant in system. (Refrigerant leaking) | Using a gas leak detector, check for leaks and repair as necessary. Recharge refrigerant to a specified amount.<br>If the pressure reading is almost 0 when the manifold gauges are attached, check for any leaks, repair them, and evacuate the system. |
| 0.4 – 0.6<br>(4 – 6)<br>(56.9 – 85.3) | | Pressure on low pressure side is high.<br>Pressure on high pressure side is low.<br>Both pressure becoming equal right after A/C is turned OFF. | Internal leak in compressor | Inspect compressor and repair or replace as necessary. |

www.cargeek.ir

 www.CarGeek.ir

| Condition | | | Possible Cause | Correction |
|---|---|---|---|---|
| Manifold Gauge | MPa (kg/cm$^2$) (psi) | Detail | | |
| Lo | Hi | | | |
| M16 engine model<br>0.35 – 0.45<br>(3.5 – 4.5)<br>(50 – 64)<br>J20 engine model<br>0.33 – 0.45<br>(3.3 – 4.5)<br>(47 – 64) | 2.0 – 2.5<br>(20 – 25)<br>(285 – 355) | High pressure reading on both low and high pressure sides. | Overcharged A/C system.<br>Faulty condenser cooling operation.<br>Faulty radiator fan operation. | Adjust refrigerant to specified amount.<br>Clean condenser.<br>Inspect and repair radiator fan. |
| | | High pressure reading on both low and high pressure sides.<br>Low pressure side tubing is not cold when touched. | Presence of air in A/C system. (Improperly evacuated) | Replace desiccant.<br>Inspect quantity of compressor oil and presence of contaminants in oil.<br>Evacuate system and recharge with fresh refrigerant. |
| 0.45 – 0.55<br>(4.5 – 5.5)<br>(64 – 78) | | High pressure reading on both low and high pressure sides.<br>Large amount of frost or dew on the low pressure side tubing. | Faulty expansion valve.<br>Refrigerant flow is not regulated properly. | Replace expansion valve. |

www.cargeek.ir

www.cargeek.ir

www.CarGeek.ir


## A/C System Symptom Diagnosis

S5JB0A7204001

| Condition | Possible cause | Correction / Reference Item |
|---|---|---|
| ***No cool air comes out (A/C system does not operate)*** | No refrigerant | *Perform recovery, evacuation and charge referring to "Operation Procedure for Charging A/C with Refrigerant: ".* |
| | Fuse blown | *Check related fuses, and then check for short circuit to ground.* |
| | Evaporator temperature sensor faulty | *Check evaporator temperature sensor referring to "A/C Evaporator Temperature Sensor Inspection: ".* |
| | A/C refrigerant pressure sensor faulty | *Check A/C refrigerant pressure sensor referring to "A/C Refrigerant Pressure Sensor and Its Circuit Inspection: ".* |
| | Wiring or grounding faulty | *Repair as necessary.* |
| | ECT sensor faulty | *Check ECT sensor referring to "Engine Coolant Temperature (ECT) Sensor Inspection: in Section 1C".* |
| | ECM faulty | *Check ECM referring to "A/C System Inspection at ECM: ".* |
| | HVAC control module faulty | *Check HVAC control module referring to "HVAC Control Module and Its Circuits Inspection: ".* |
| | Magnet clutch faulty | *Check magnet clutch referring to "Magnet Clutch Operating Check for M16 Engine Model: " or "Magnet Clutch Operating Check for J20 Engine Model: ".* |
| | Compressor drive belt loosened or broken | *Adjust or replace drive belt.* |
| | Compressor faulty | *Check compressor.* |
| | Compressor relay faulty | *Check compressor relay referring to "A/C Compressor Relay Inspection: ".* |
| | Temperature selector, blower speed selector, and/or air flow selector faulty | *Check HVAC control module referring to "HVAC Control Module and Its Circuits Inspection: ".* |
| | BCM faulty | *Check BCM referring to "Inspection of BCM and its Circuits: in Section 10B".* |
| ***No cool air comes out (radiator cooling fan motor does not operate)*** | Fuse blown | *Check related fuses, and then check for short circuit to ground.* |
| | Wiring or grounding faulty | *Repair as necessary.* |
| | Radiator cooling fan motor relay faulty | *Check radiator cooling fan motor relay referring to "Radiator Cooling Fan Relay Inspection: in Section 1F".* |
| | Radiator cooling fan motor faulty | *Check radiator cooling fan motor referring to "Radiator Cooling Fan Motor On-Vehicle Inspection: in Section 1F".* |
| | ECM faulty | *Check ECM referring to "A/C System Inspection at ECM: ".* |
| | HVAC control module faulty | *Check HVAC control module referring to "HVAC Control Module and Its Circuits Inspection: ".* |

www.cargeek.ir

 www.CarGeek.ir

| Condition | Possible cause | Correction / Reference Item |
|---|---|---|
| ***No cool air comes out (blower motor does not operate)*** | Fuse blown | *Check related fuses, and then check for short circuit to ground.* |
| | Blower motor controller faulty | *Check blower motor controller referring to "Blower Motor Controller Inspection: in Section 7A".* |
| | Blower speed selector faulty | *Check blower speed selector referring to "HVAC Control Module and Its Circuits Inspection: ".* |
| | HVAC control module faulty | *Check HVAC control module referring to "HVAC Control Module and Its Circuits Inspection: ".* |
| | Wiring or grounding faulty | *Repair as necessary.* |
| | Blower motor faulty | *Check blower motor referring to "Blower Motor Inspection: in Section 7A".* |
| | Blower motor relay faulty | *Check blower motor relay referring to "Blower Motor Relay Inspection: in Section 7A".* |
| ***Cool air does not come out or insufficient cooling (A/C system normal operation)*** | Insufficient or excessive charge of refrigerant | *Check the amount of refrigerant and system for leaks.* |
| | Condenser clogged | *Check condenser referring to "A/C Condenser Assembly On-Vehicle Inspection: ".* |
| | A/C evaporator clogged or frosted | *Check A/C evaporator and evaporator temperature sensor referring to "A/C Evaporator Inspection: " and "A/C Evaporator Temperature Sensor Inspection: ".* |
| | Evaporator temperature sensor faulty | *Check evaporator temperature sensor referring to "A/C Evaporator Temperature Sensor Inspection: ".* |
| | Expansion valve faulty | *Check expansion valve referring to "Expansion Valve On-Vehicle Inspection: ".* |
| | Desiccant clogged | *Check desiccant.* |
| | Compressor drive belt loosened or broken | *Adjust or replace drive belt.* |
| | Magnet clutch faulty | *Check magnet clutch referring to "Magnet Clutch Operating Check for M16 Engine Model: " or "Magnet Clutch Operating Check for J20 Engine Model: ".* |
| | Compressor faulty | *Check compressor.* |
| | Air in A/C system | *Replace desiccant, and then perform evacuation and charge referring to "Operation Procedure for Charging A/C with Refrigerant: ".* |
| | Air leaking from HVAC unit or air duct | *Repair as necessary.* |
| | Heater and ventilation system faulty | *Check HVAC unit.* |
| | Temperature selector faulty | *Check temperature selector referring to "HVAC Control Module and Its Circuits Inspection: ".* |
| | HVAC control module faulty | *Check HVAC control module referring to "HVAC Control Module and Its Circuits Inspection: ".* |
| | Temperature control actuator faulty | *Check temperature control actuator referring to "Temperature Control Actuator Inspection: ".* |
| | Blower motor faulty | *Check blower motor referring to "Blower Motor Inspection: in Section 7A".* |
| | Excessive compressor oil in A/C system | *Drain excessive compressor oil from A/C system circuit and compressor.* |

www.cargeek.ir

www.CarGeek.ir


| Condition | Possible cause | Correction / Reference Item |
|---|---|---|
| ***Cool air does not come out only intermittently*** | Wiring connection faulty | *Repair as necessary.* |
| | Expansion valve faulty | *Check expansion valve referring to "Expansion Valve On-Vehicle Inspection: ".* |
| | Excessive moisture in A/C system | *Replace desiccant, and then perform evacuation and charge referring to "Operation Procedure for Charging A/C with Refrigerant: ".* |
| | Magnet clutch faulty | *Check magnet clutch referring to "Magnet Clutch Operating Check for M16 Engine Model: " or "Magnet Clutch Operating Check for J20 Engine Model: ".* |
| | Excessive amount of refrigerant | *Check the amount of refrigerant.* |
| ***Cool air comes out only at high speed*** | Condenser clogged | *Check condenser referring to "A/C Condenser Assembly On-Vehicle Inspection: ".* |
| | Insufficient charge of refrigerant | *Check the amount of refrigerant and system for leaks.* |
| | Air in A/C system | *Replace desiccant, and then perform evacuation and charge referring to "Operation Procedure for Charging A/C with Refrigerant: ".* |
| | Compressor drive belt loosened or broken | *Adjust or replace drive belt.* |
| | Compressor faulty | *Check compressor.* |
| ***Cool air does not come out only at high speed*** | Excessive amount of refrigerant | *Check the amount of refrigerant.* |
| | A/C evaporator frosted | *Check A/C evaporator and evaporator temperature sensor referring to "A/C Evaporator Inspection: " and "A/C Evaporator Temperature Sensor Inspection: ".* |
| ***Insufficient air flow of cooled air*** | A/C evaporator clogged or frosted | *Check A/C evaporator and evaporator temperature sensor referring to "A/C Evaporator Inspection: " and "A/C Evaporator Temperature Sensor Inspection: ".* |
| | Air leaking from HVAC unit or air duct | *Repair as necessary.* |
| | Blower motor faulty | *Check blower motor referring to "Blower Motor Inspection: in Section 7A".* |
| | Wiring or grounding faulty | *Repair as necessary.* |

## Abnormal Noise Diagnosis

S5JB0A7204002

There are various types of noise, ranging from those produced in the engine compartment to those from the passenger compartment, also from rumbling noises to whistling noises.

## Abnormal Noise Symptom Diagnosis of A/C System

S5JB0A7204026

### Abnormal Noise from Compressor

| Condition | Possible cause | Correction / Reference Item |
|---|---|---|
| ***During compressor operation, a rumbling noise is heard proportional to engine revolutions*** | Inadequate clearance in scroll area | *Replace compressor.* |
| ***A loud noise is heard at a certain rpm, disproportionately to engine revolution*** | Loose or faulty compressor drive belt | *Adjust drive belt tension or replace drive belt.* |
| | Loose compressor mounting bolts | *Retighten mounting bolts.* |
| ***A loud rattle is heard at low engine rpm*** | Loose compressor armature plate bolt | *Retighten armature plate bolt.*<br>*Replace compressor if it was operated in this condition for a long time.* |

www.cargeek.ir

 www.CarGeek.ir

### Abnormal Noise from Magnetic Clutch

| Condition | Possible cause | Correction / Reference Item |
|---|---|---|
| ***A rumbling noise is heard when compressor is not in operation*** | Worn or damaged bearings | *Replace magnet clutch assembly.* |
| ***A chattering noise is heard when compressor is in operation*** | Faulty magnet clutch clearance (excessive clearance) | *Adjust magnet clutch clearance.* |
| | Worn magnet clutch friction surface | *Replace magnet clutch assembly.* |
| | Compressor oil leaked from shaft seal, contaminating the friction surface | *Replace compressor body assembly.* |

### Abnormal Noise from Tubing

| Condition | Possible cause | Correction / Reference Item |
|---|---|---|
| ***A droning noise is heard from inside of the vehicle, but not particularly noticeable in engine compartment*** | Faulty tubing clamps | *Reposition clamps or increase the number of clamps.* |
| | Resonance caused by pulsation from variations in refrigerant pressure | *Attach a silencer to tubing, or modify its position and length.* |

### Abnormal Noise from Condenser Assembly

| Condition | Possible cause | Correction / Reference Item |
|---|---|---|
| ***Considerable vibration in condenser assembly*** | Resonance from condenser assembly bracket and body | *Firmly insert a silencer between condenser assembly bracket and body.* |

### Abnormal Noise from Crankshaft Pulley

| Condition | Possible cause | Correction / Reference Item |
|---|---|---|
| ***A large rattling noise is heard at idle or sudden acceleration*** | Loosen crankshaft pulley bolt | *Retighten bolt.* |

### Abnormal Noise from Tension Pulley

| Condition | Possible cause | Correction / Reference Item |
|---|---|---|
| ***Clattering noise is heard from pulley*** | Worn or damaged bearing | *Replace tension pulley.* |
| ***Pulley cranks upon contact*** | Cracked or loose bracket | *Replace or retighten bracket.* |

### Abnormal Noise from A/C Evaporator

| Condition | Possible cause | Correction / Reference Item |
|---|---|---|
| ***Whistling sound is heard from A/C evaporator*** | Depending on the combination of the interior / exterior temperatures, engine rpm and refrigerant pressure, the refrigerant flowing out of the expansion valve may, under certain conditions, make a whistling sound | *At times, slightly decreasing refrigerant volume may stop this noise.*<br>*Inspect expansion valve and replace if faulty.* |

### Abnormal Noise from Blower Motor

| Condition | Possible cause | Correction / Reference Item |
|---|---|---|
| ***Blower motor emits a chirping sound in proportion to its speed of rotation*** | Worn or damaged motor brushes or commutator | *Replace blower motor.* |
| ***Fluttering noise or large droning noise is heard from blower motor*** | Leaves or other debris introduced from fresh air inlet to blower motor | *Remove debris and make sure that the screen at fresh air inlet is intact.* |

www.cargeek.ir

www.CarGeek.ir


## DTC B1502: Inside Air Temperature Sensor and/or Its Circuit Malfunction

S5JB0A7204033

### Wiring Diagram

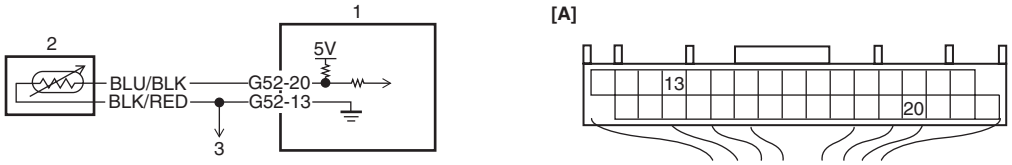


I5JB0A720020-01

| | |
|---|---|
| [A]: HVAC control module connector “G52” (harness side view) | 2. Inside air temperature sensor |
| 1. HVAC control module | 3. To other sensors |

### DTC Detecting Condition and Trouble Area

| DTC Detecting Condition | Trouble Area |
|---|---|
| Inside air temperature sensor signal voltage is more than or less than specified value for specified time continuously. | • Inside air temperature sensor circuit<br>• Inside air temperature sensor<br>• HVAC control module |

### DTC Confirmation Procedure

1) Connect scan tool to DLC with ignition switch turned OFF.
2) Turn ON ignition switch and clear DTC using scan tool.
3) Check DTC.

### DTC Troubleshooting

**NOTE**

**When DTC B1503, B1511, B1512 and B1530 are indicated together, it is possible that “BLK/RED” wire circuit open.**

| Step | Action | Yes | No |
|---|---|---|---|
| 1 | **Inside air temperature sensor signal circuit check**<br>1) Disconnect inside air temperature sensor connector with ignition switch turned OFF.<br>2) Check for proper connection to inside air temperature sensor at “BLU/BLK” and “BLK/RED” wire terminals.<br>3) If OK, measure voltage between “BLU/BLK” wire terminal of inside air temperature sensor connector and vehicle body ground with ignition switch turned ON.<br>*Is voltage 4 – 6 V?* | Go to Step 5. | Go to Step 2. |
| 2 | **Inside air temperature sensor signal circuit check**<br>1) Disconnect connector from HVAC control module with ignition switch turned OFF.<br>2) Check for proper connection to HVAC control module connector at “G52-20” and “G52-13” terminals.<br>3) If OK, measure resistance between “BLU/BLK” wire terminal of inside air temperature sensor connector and “G52-20” terminal of HVAC control module connector.<br>*Is resistance below 5 Ω?* | Go to Step 3. | “BLU/BLK” wire open or high resistance circuit. |
| 3 | **Inside air temperature sensor signal circuit check**<br>1) Measure resistance between “BLU/BLK” wire terminal of inside air temperature sensor connector and vehicle body ground.<br>*Is resistance infinity?* | Go to Step 4. | “BLU/BLK” wire shorted to ground circuit. |

www.cargeek.ir

 www.CarGeek.ir

| Step | Action | Yes | No |
|---|---|---|---|
| 4 | **Inside air temperature sensor signal circuit check**<br>1) Measure voltage between “BLU/BLK” wire terminal of inside air temperature sensor connector and vehicle body ground with ignition switch turned ON.<br>*Is voltage 0 V?* | Go to Step 5. | “BLU/BLK” wire shorted to other circuit. |
| 5 | **Inside air temperature sensor ground circuit check**<br>1) Connect HVAC control module connector with ignition switch turned OFF.<br>2) Measure resistance between “BLK/RED” wire terminal of inside air temperature sensor connector and vehicle body ground.<br>*Is resistance below 5 Ω?* | Go to Step 7. | Go to Step 6. |
| 6 | **Inside air temperature sensor ground circuit check**<br>1) Measure resistance between “G52-13” terminal of HVAC control module connector and vehicle body ground.<br>*Is resistance below 5 Ω?* | “BLK/RED” wire open or high resistance circuit. | HVAC control module faulty. |
| 7 | **Inside air temperature sensor check**<br>1) Check inside air temperature sensor referring to “Inside Air Temperature Sensor Inspection: ”.<br>*Is it in good condition?* | HVAC control module faulty. | Inside air temperature sensor faulty. |

## DTC B1503: A/C Evaporator Air Temperature Sensor and/or Its Circuit Malfunction

S5JB0A7204034

### Wiring Diagram

I5JB0A720021-01

| | |
|---|---|
| [A]: HVAC control module connector “G52” (harness side view) | 2. Evaporator temperature sensor |
| 1. HVAC control module | 3. To other sensors |

### DTC Detecting Condition and Trouble Area

| DTC Detecting Condition | Trouble Area |
|---|---|
| Evaporator temperature sensor signal voltage is more than or less than specified value for specified time continuously. | • Evaporator temperature sensor circuit<br>• Evaporator temperature sensor<br>• HVAC control module |

### DTC Confirmation Procedure

1) Connect scan tool to DLC with ignition switch turned OFF.
2) Turn ON ignition switch and clear DTC using scan tool.
3) Check DTC.

www.cargeek.ir

www.CarGeek.ir


## DTC Troubleshooting

**NOTE**

**When DTC B1502, B1511, B1512 and B1530 are indicated together, it is possible that "BLK/RED" wire circuit open.**

| Step | Action | Yes | No |
|---|---|---|---|
| 1 | **Evaporator temperature sensor signal circuit check**<br>1) Disconnect evaporator temperature sensor connector with ignition switch turned OFF.<br>2) Check for proper connection to evaporator temperature sensor at "WHT/BLK" and "BLK/RED" wire terminals.<br>3) If OK, measure voltage between "WHT/BLK" wire terminal of evaporator temperature sensor connector and vehicle body ground with ignition switch turned ON.<br>*Is voltage 4 – 6 V?* | Go to Step 5. | Go to Step 2. |
| 2 | **Evaporator temperature sensor signal circuit check**<br>1) Disconnect connector from HVAC control module with ignition switch turned OFF.<br>2) Check for proper connection to HVAC control module connector at "G52-19" and "G52-13" terminals.<br>3) If OK, measure resistance between "WHT/BLK" wire terminal of evaporator temperature sensor connector and "G52-19" terminal of HVAC control module connector.<br>*Is resistance below 5 Ω?* | Go to Step 3. | "WHT/BLK" wire open or high resistance circuit. |
| 3 | **Evaporator temperature sensor signal circuit check**<br>1) Measure resistance between "WHT/BLK" wire terminal of evaporator temperature sensor connector and vehicle body ground.<br>*Is resistance infinity?* | Go to Step 4. | "WHT/BLK" wire shorted to ground circuit. |
| 4 | **Evaporator temperature sensor signal circuit check**<br>1) Measure voltage between "WHT/BLK" wire terminal of evaporator temperature sensor connector and vehicle body ground with ignition switch turned ON.<br>*Is voltage 0 V?* | Go to Step 5. | "WHT/BLK" wire shorted to other circuit. |
| 5 | **Evaporator temperature sensor ground circuit check**<br>1) Connect HVAC control module connector with ignition switch turned OFF.<br>2) Measure resistance between "BLK/RED" wire terminal of evaporator temperature sensor connector and vehicle body ground.<br>*Is resistance below 5 Ω?* | Go to Step 7. | Go to Step 6. |
| 6 | **Evaporator temperature sensor ground circuit check**<br>1) Measure resistance between "G52-13" terminal of HVAC control module connector and vehicle body ground.<br>*Is resistance below 5 Ω?* | "BLK/RED" wire open or high resistance circuit. | HVAC control module faulty. |
| 7 | **Evaporator temperature sensor check**<br>1) Check evaporator temperature sensor referring to "A/C Evaporator Temperature Sensor Inspection: ".<br>*Is it in good condition?* | HVAC control module faulty. | Evaporator temperature sensor faulty. |

www.cargeek.ir

 www.CarGeek.ir

## DTC B1504: Sunload Sensor and/or Its Circuit Malfunction

S5JB0A7204035

### Wiring Diagram

I5JB0A720022-01

| | | |
|---|---|---|
| [A]: HVAC control module connector “G52” (harness side view) | 1. HVAC control module | 2. Sunload sensor |

### DTC Detecting Condition and Trouble Area

| DTC Detecting Condition | Trouble Area |
|---|---|
| Sunload sensor signal voltage is more than or less than specified value for specified time continuously. | • Sunload sensor circuit<br>• Sunload sensor<br>• HVAC control module |

### DTC Confirmation Procedure

1) Connect scan tool to DLC with ignition switch turned OFF.
2) Turn ON ignition switch and clear DTC using scan tool.
3) Check DTC.

### DTC Troubleshooting

| Step | Action | Yes | No |
|---|---|---|---|
| 1 | **Sunload sensor power supply circuit check**<br>1) Disconnect sunload sensor connector with ignition switch turned OFF.<br>2) Check for proper connection to sunload sensor at “PNK” and “YEL” wire terminals.<br>3) If OK, measure voltage between “PNK” wire terminal of sunload sensor connector and vehicle body ground with ignition switch turned ON.<br>*Is voltage 4 – 6 V?* | Go to Step 5. | Go to Step 2. |
| 2 | **Sunload sensor power supply circuit check**<br>1) Disconnect connector from HVAC control module with ignition switch turned OFF.<br>2) Check for proper connection to HVAC control module connector at “G52-12” and “G52-18” terminals.<br>3) If OK, measure resistance between “PNK” wire terminal of sunload sensor connector and “G52-12” terminal of HVAC control module connector.<br>*Is resistance below 5 Ω?* | Go to Step 3. | “PNK” wire open or high resistance circuit. |
| 3 | **Sunload sensor power supply circuit check**<br>1) Measure resistance between “PNK” wire terminal of sunload sensor connector and vehicle body ground.<br>*Is resistance infinity?* | Go to Step 4. | “PNK” wire shorted to ground circuit. |
| 4 | **Sunload sensor power supply circuit check**<br>1) Measure voltage between “PNK” wire terminal of sunload sensor connector and vehicle body ground with ignition switch turned ON.<br>*Is voltage 0 V?* | Go to Step 5. | “PNK” wire shorted to other circuit. |

www.cargeek.ir

www.CarGeek.ir


| Step | Action | Yes | No |
|---|---|---|---|
| 5 | **Sunload sensor signal circuit check**<br>1) Disconnect HVAC control module connector with ignition switch turned OFF.<br>2) Measure resistance between “YEL” wire terminal of sunload sensor connector and vehicle body ground.<br>*Is resistance infinity?* | Go to Step 6. | “YEL” wire shorted to ground circuit. |
| 6 | **Sunload sensor signal circuit check**<br>1) Measure resistance between “G52-12” terminal of HVAC control module connector and “YEL” wire terminal of sunload sensor connector.<br>*Is resistance below 5 Ω?* | Go to Step 7. | “YEL” wire open or high resistance circuit. |
| 7 | **Sunload sensor signal circuit check**<br>1) Measure voltage between “YEL” wire terminal of sunload sensor connector and vehicle body ground with ignition switch turned ON.<br>*Is voltage 0 V?* | Go to Step 8. | “YEL” wire shorted to other circuit. |
| 8 | **Sunload sensor check**<br>1) Check sunload sensor referring to “Sunload Sensor Inspection: ”.<br>*Is it in good condition?* | HVAC control module faulty. | Sunload sensor faulty. |

## DTC B1511: Temperature Control Actuator (Position Sensor) and/or Its Circuit Malfunction

S5JB0A7204036

### Wiring Diagram

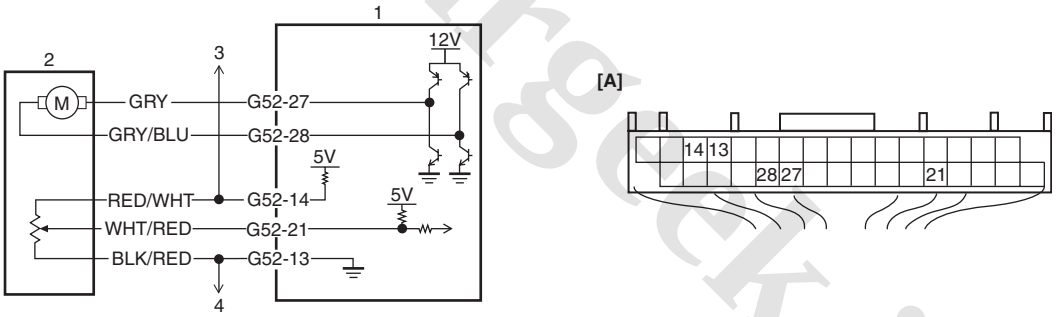


I5JB0A720023-02

| | |
|---|---|
| [A]: HVAC control module connector “G52” (harness side view) | 3. To other actuators |
| 1. HVAC control module | 4. To other sensors |
| 2. Temperature control actuator | |

### DTC Detecting Condition and Trouble Area

| DTC Detecting Condition | Trouble Area |
|---|---|
| Temperature control actuator position sensor signal voltage is more than or less than specified value for specified time continuously. | • Temperature control actuator circuit<br>• Temperature control actuator<br>• HVAC control module |

### DTC Confirmation Procedure

1) Connect scan tool to DLC with ignition switch turned OFF.
2) Turn ON ignition switch and clear DTC using scan tool.
3) Check DTC.

www.cargeek.ir

 www.CarGeek.ir

## DTC Troubleshooting

**NOTE**

**When DTC B1502, B1503, B1512 and B1530 are indicated together, it is possible that "BLK/RED" wire circuit open.**

| Step | Action | Yes | No |
|---|---|---|---|
| 1 | **Position sensor power supply circuit check**<br>1) Disconnect temperature control actuator connector with ignition switch turned OFF.<br>2) Check for proper connection to temperature control actuator at "RED/WHT", "WHT/RED" and "BLK/RED" wire terminals.<br>3) If OK, measure voltage between "RED/WHT" wire terminal of temperature control actuator connector and vehicle body ground with ignition switch turned ON.<br>*Is voltage 4 – 6 V?* | Go to Step 6. | Go to Step 2. |
| 2 | **Position sensor power supply circuit check**<br>1) Disconnect air flow control actuator connector with ignition switch turned OFF.<br>2) Measure voltage between "RED/WHT" wire terminal of temperature control actuator connector and vehicle body ground with ignition switch turned ON.<br>*Is voltage 4 – 6 V?* | Air flow control actuator faulty. | Go to Step 3. |
| 3 | **Position sensor power supply circuit check**<br>1) Disconnect air intake control actuator connector with ignition switch turned OFF.<br>2) Measure voltage between "RED/WHT" wire terminal of temperature control actuator connector and vehicle body ground with ignition switch turned ON.<br>*Is voltage 4 – 6 V?* | Air intake control actuator faulty. | Go to Step 4. |
| 4 | **Position sensor power supply circuit check**<br>1) Disconnect connector from HVAC control module with ignition switch turned OFF.<br>2) Check for proper connection to HVAC control module connector at "G52-14", "G52-27" and "G52-21" terminals.<br>3) If OK, measure resistance between "RED/WHT" wire terminal of temperature control actuator connector and "G52-14" terminal of HVAC control module connector.<br>*Is resistance below 5 Ω?* | Go to Step 5. | "RED/WHT" wire open or high resistance circuit. |
| 5 | **Position sensor power supply circuit check**<br>1) Measure resistance between "RED/WHT" wire terminal of temperature control actuator connector and vehicle body ground.<br>*Is resistance infinity?* | Go to Step 6. | "RED/WHT" wire shorted to ground circuit. |
| 6 | **Position sensor power supply circuit check**<br>1) Measure voltage between "RED/WHT" wire terminal of temperature control actuator connector and vehicle body ground with ignition switch turned ON.<br>*Is voltage 0 V?* | Go to Step 7. | "RED/WHT" wire shorted to other circuit. |

www.cargeek.ir

www.CarGeek.ir


| Step | Action | Yes | No |
|---|---|---|---|
| 7 | **Position sensor signal circuit check**<br>1) Connect HVAC control module connector with ignition switch turned OFF.<br>2) Measure voltage between “WHT/RED” wire terminal of temperature control actuator connector and vehicle body ground with ignition switch turned ON.<br>*Is voltage 4 – 6 V?* | Go to Step 11. | Go to Step 8. |
| 8 | **Position sensor signal circuit check**<br>1) Disconnect connector from HVAC control module with ignition switch turned OFF.<br>2) Measure resistance between “WHT/RED” wire terminal of temperature control actuator connector and “G52-21” terminal of HVAC control module connector.<br>*Is resistance below 5 Ω?* | Go to Step 9. | “WHT/RED” wire open or high resistance circuit. |
| 9 | **Position sensor signal circuit check**<br>1) Measure resistance between “WHT/RED” wire terminal of temperature control actuator connector and vehicle body ground.<br>*Is resistance infinity?* | Go to Step 10. | “WHT/RED” wire shorted to ground circuit. |
| 10 | **Position sensor signal circuit check**<br>1) Measure voltage between “WHT/RED” wire terminal of temperature control actuator connector and vehicle body ground with ignition switch turned ON.<br>*Is voltage 0 V?* | Go to Step 11. | “WHT/RED” wire shorted to other circuit. |
| 11 | **Position sensor ground circuit check**<br>1) Connect HVAC control module connector with ignition switch turned OFF.<br>2) Measure resistance between “BLK/RED” wire terminal of temperature control actuator connector and vehicle body ground.<br>*Is resistance below 5 Ω?* | Go to Step 13. | Go to Step 12. |
| 12 | **Position sensor ground circuit check**<br>1) Measure resistance between “G52-13” terminal of HVAC control module connector and vehicle body ground.<br>*Is resistance below 5 Ω?* | “BLK/RED” wire open or high resistance circuit. | HVAC control module faulty. |
| 13 | **Temperature control actuator check**<br>1) Check temperature control actuator referring to “Temperature Control Actuator Inspection: ”.<br>*Is it in good condition?* | HVAC control module faulty. | Temperature control actuator faulty. |

www.cargeek.ir

 www.CarGeek.ir

## DTC B1512: Air Flow Control Actuator (Position Sensor) and/or Its Circuit Malfunction

S5JB0A7204037

### Wiring Diagram

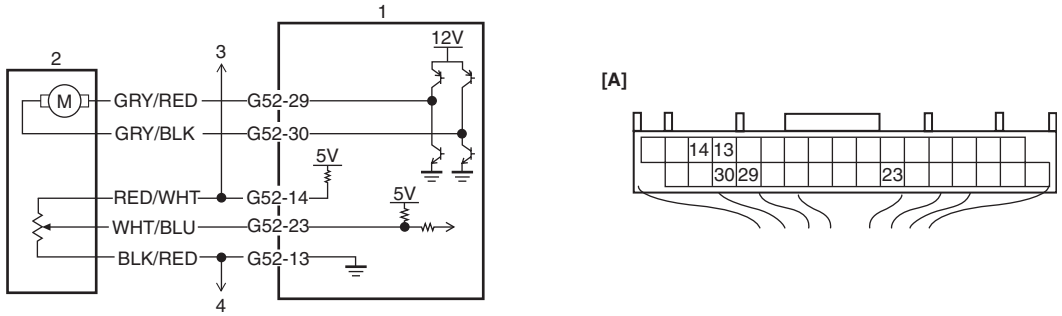


I5JB0A720024-02

| | |
|---|---|
| [A]: HVAC control unit connector “G52” (harness side view) | 3. To other actuators |
| 1. HVAC control module | 4. To other sensors |
| 2. Air flow control actuator | |

### DTC Detecting Condition and Trouble Area

| DTC Detecting Condition | Trouble Area |
|---|---|
| Air flow control actuator position sensor signal voltage is more than or less than specified value for specified time continuously. | • Air flow control actuator circuit<br>• Air flow control actuator<br>• HVAC control module |

### DTC Confirmation Procedure

1) Connect scan tool to DLC with ignition switch turned OFF.
2) Turn ON ignition switch and clear DTC using scan tool.
3) Check DTC.

### DTC Troubleshooting

**NOTE**

**When DTC B1502, B1503, B1511 and B1530 are indicated together, it is possible that “BLK/RED” wire circuit open.**

| Step | Action | Yes | No |
|---|---|---|---|
| 1 | **Position sensor power supply circuit check**<br>1) Disconnect air flow control actuator connector with ignition switch turned OFF.<br>2) Check for proper connection to air flow control actuator at “RED/WHT”, “WHT/BLU” and “BLK/RED” wire terminals.<br>3) If OK, measure voltage between “RED/WHT” wire terminal of air flow control actuator connector and vehicle body ground with ignition switch turned ON.<br>*Is voltage 4 – 6 V?* | Go to Step 6. | Go to Step 2. |
| 2 | **Position sensor power supply circuit check**<br>1) Disconnect temperature control actuator connector with ignition switch turned OFF.<br>2) Measure voltage between “RED/WHT” wire terminal of air flow control actuator connector and vehicle body ground with ignition switch turned ON.<br>*Is voltage 4 – 6 V?* | Temperature control actuator faulty. | Go to Step 3. |

www.cargeek.ir

| Step | Action | Yes | No |
|---|---|---|---|
| 3 | **Position sensor power supply circuit check**<br>1) Disconnect air intake control actuator connector with ignition switch turned OFF.<br>2) Measure voltage between “RED/WHT” wire terminal of temperature control actuator connector and vehicle body ground with ignition switch turned ON.<br>*Is voltage 4 – 6 V?* | Air intake control actuator faulty. | Go to Step 4. |
| 4 | **Position sensor power supply circuit check**<br>1) Disconnect connector from HVAC control module with ignition switch turned OFF.<br>2) Check for proper connection to HVAC control module connector at “G52-14”, “G52-13” and “G52-23” terminals.<br>3) If OK, measure resistance between “RED/WHT” wire terminal of air flow control actuator connector and “G52-14” terminal of HVAC control module connector.<br>*Is resistance below 5 Ω?* | Go to Step 5. | “RED/WHT” wire open or high resistance circuit. |
| 5 | **Position sensor power supply circuit check**<br>1) Measure resistance between “RED/WHT” wire terminal of air flow control actuator connector and vehicle body ground.<br>*Is resistance infinity?* | Go to Step 6. | “RED/WHT” wire shorted to ground circuit. |
| 6 | **Position sensor power supply circuit check**<br>1) Measure voltage between “RED/WHT” wire terminal of air flow control actuator connector and vehicle body ground with ignition switch turned ON.<br>*Is voltage 0 V?* | Go to Step 7. | “RED/WHT” wire shorted to other circuit. |
| 7 | **Position sensor signal circuit check**<br>1) Connect HVAC control module connector with ignition switch turned OFF.<br>2) Measure voltage between “WHT/BLU” wire terminal of air flow control actuator connector and vehicle body ground with ignition switch turned ON.<br>*Is voltage 4 – 6 V?* | Go to Step 11. | Go to Step 8. |
| 8 | **Position sensor signal circuit check**<br>1) Disconnect connector from HVAC control module with ignition switch turned OFF.<br>2) Measure resistance between “WHT/BLU” wire terminal of air flow control actuator connector and “G52-23” terminal of HVAC control module connector.<br>*Is resistance below 5 Ω?* | Go to Step 9. | “WHT/BLU” wire open or high resistance circuit. |
| 9 | **Position sensor signal circuit check**<br>1) Measure resistance between “WHT/BLU” wire terminal of air flow control actuator connector and vehicle body ground.<br>*Is resistance infinity?* | Go to Step 10. | “WHT/BLU” wire shorted to ground circuit. |

www.cargeek.ir

 www.CarGeek.ir

| Step | Action | Yes | No |
|---|---|---|---|
| 10 | **Position sensor signal circuit check**<br>1) Measure voltage between “WHT/BLU” wire terminal of air flow control actuator connector and vehicle body ground with ignition switch turned ON.<br>*Is voltage 0 V?* | Go to Step 11. | “WHT/BLU” wire shorted to other circuit. |
| 11 | **Position sensor ground circuit check**<br>1) Connect HVAC control module connector with ignition switch turned OFF.<br>2) Measure resistance between “BLK/RED” wire terminal of air flow control actuator connector and vehicle body ground.<br>*Is resistance below 5 Ω?* | Go to Step 13. | Go to Step 12. |
| 12 | **Position sensor ground circuit check**<br>1) Measure resistance between “G52-13” terminal of HVAC control module connector and vehicle body ground.<br>*Is resistance below 5 Ω?* | “BLK/RED” wire open or high resistance circuit. | HVAC control module faulty. |
| 13 | **Air flow control actuator check**<br>1) Check air flow control actuator referring to “Air Flow Control Actuator Inspection: ”.<br>*Is it in good condition?* | HVAC control module faulty. | Air flow control actuator faulty. |

## DTC B1513: Temperature Control Actuator and/or Its Circuit Malfunction

S5JB0A7204038

### Wiring Diagram

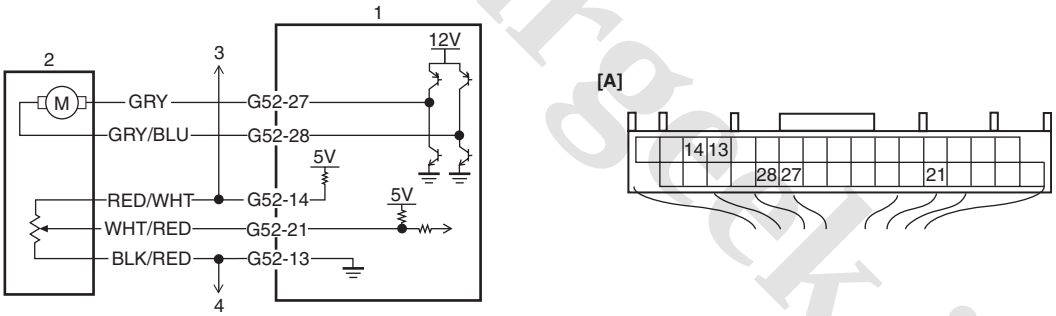


I5JB0A720025-02

| | |
|---|---|
| [A]: HVAC control module connector “G52” (harness side view) | 3. To other actuators |
| 1. HVAC control module | 4. To other sensors |
| 2. Temperature control actuator | |

### DTC Detecting Condition and Trouble Area

| DTC Detecting Condition | Trouble Area |
|---|---|
| Difference between target opening and actual opening is more than specified value even though temperature control actuator has operated for 15 seconds. | • Temperature control actuator circuit<br>• Temperature control linkage<br>• Temperature control actuator<br>• HVAC unit<br>• HVAC control module |

www.cargeek.ir

**DTC Confirmation Procedure**

1) Connect scan tool to DLC with ignition switch turned OFF.
2) Turn ON ignition switch and clear DTC using scan tool.
3) Start A/C system and select temperature selector at “MAX COOL” position or “MAX HOT” position.
4) Wait for 1 minute.
5) Check DTC.

**DTC Troubleshooting**

| Step | Action | Yes | No |
|---|---|---|---|
| 1 | **DTC check**<br>1) Connect scan tool to DLC with ignition switch turned OFF.<br>2) Turn ON ignition switch and check DTC.<br>*Is there DTC B1511?* | Go to applicable DTC diag. flow. | Go to Step 2. |
| 2 | **Visual check**<br>1) Check if there is any obstruction in operating range of actuator linkage and if actuator linkage operates smoothly.<br>*Is it in good condition?* | Go to Step 3. | Obstruction in operating range of actuator linkage, actuator linkage faulty and/or internal fault of HVAC unit. |
| 3 | **Wire harness check**<br>1) Disconnect connector from temperature control actuator with ignition switch turned OFF.<br>2) Check for proper connection to temperature control actuator connector at “GRY” and “GRY/BLU” wire terminals.<br>3) If OK, measure voltage between “GRY” wire terminal of temperature control actuator connector and vehicle body ground with ignition switch turned ON when temperature selector is operation to COOL direction.<br>*Is voltage 10 – 14 V?* | Go to Step 7. | Go to Step 4. |
| 4 | **Wire harness check**<br>1) Disconnect connector from HVAC control module with ignition switch turned OFF.<br>2) Check for proper connection to HVAC control module connector at “G52-27” and “G52-28” terminals.<br>3) If OK, measure resistance between “GRY” wire terminal of temperature control actuator connector and “G52-27” terminal of HVAC control module connector.<br>*Is resistance below 5 Ω?* | Go to Step 5. | “GRY” wire open or high resistance circuit. |
| 5 | **Wire harness check**<br>1) Measure resistance between “GRY” wire terminal of temperature control actuator connector and vehicle body ground.<br>*Is resistance infinity?* | Go to Step 6. | “GRY” wire shorted to ground circuit. |
| 6 | **Wire harness check**<br>1) Measure voltage between “GRY” wire terminal of temperature control actuator connector and vehicle body ground with ignition switch turned ON.<br>*Is voltage 0 V?* | Go to Step 7. | “GRY” wire shorted to other circuit. |

www.cargeek.ir

 www.CarGeek.ir

| Step | Action | Yes | No |
|---|---|---|---|
| 7 | **Wire harness check**<br>1) Connect connector to HVAC control module with ignition switch turned OFF.<br>2) Measure voltage between “GRY/BLU” wire terminal of temperature control actuator connector and vehicle body ground with ignition switch turned ON when temperature selector is operation to HOT direction.<br>*Is voltage 10 – 14 V?* | Go to Step 11. | Go to Step 8. |
| 8 | **Wire harness check**<br>1) Disconnect connector from HVAC control module with ignition switch turned OFF.<br>2) Check for proper connection to HVAC control module connector at “G52-27” and “G52-28” terminals.<br>3) If OK, measure resistance between “GRY/BLU” wire terminal of temperature control actuator connector and “G52-28” terminal of HVAC control module connector.<br>*Is resistance below 5 Ω?* | Go to Step 9. | “GRY/BLU” wire open or high resistance circuit. |
| 9 | **Wire harness check**<br>1) Measure resistance between “GRY/BLU” wire terminal of temperature control actuator connector and vehicle body ground.<br>*Is resistance infinity?* | Go to Step 10. | “GRY/BLU” wire shorted to ground circuit. |
| 10 | **Wire harness check**<br>1) Measure voltage between “GRY/BLU” wire terminal of temperature control actuator connector and vehicle body ground with ignition switch turned ON.<br>*Is voltage 0 V?* | Go to Step 11. | “GRY/BLU” wire shorted to other circuit. |
| 11 | **Position sensor circuit check**<br>1) Check temperature control actuator position sensor circuit referring to Step 1 to Step 6 and Step 11 to Step 12 of “DTC B1511: Temperature Control Actuator (Position Sensor) and/or Its Circuit Malfunction: ”.<br>*Is it in good condition?* | Go to Step 12. | Repair circuit. |
| 12 | **Temperature control actuator check**<br>1) Check temperature control actuator referring to “Temperature Control Actuator Inspection: ”.<br>*Is it in good condition?* | HVAC control module faulty. | Temperature control actuator faulty. |

www.cargeek.ir

www.CarGeek.ir


## DTC B1514: Air Flow Control Actuator and/or Its Circuit Malfunction

S5JB0A7204039

### Wiring Diagram

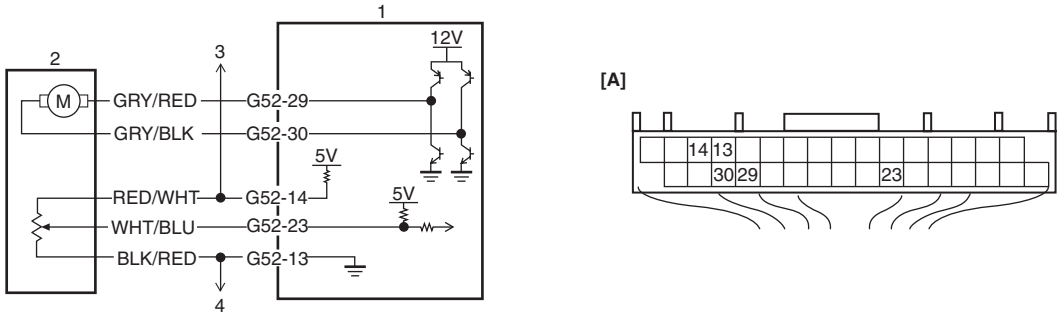


I5JB0A720026-01

| | |
|---|---|
| [A]: HVAC control module connector “G52” (harness side view) | 3. To other actuators |
| 1. HVAC control module | 4. To other sensors |
| 2. Air flow control actuator | |

### DTC Detecting Condition and Trouble Area

| DTC Detecting Condition | Trouble Area |
|---|---|
| Difference between target opening and actual opening is more than specified value even though air flow control actuator has operated for 15 seconds. | • Air flow control actuator circuit<br>• Air flow control linkage<br>• Air flow control actuator<br>• HVAC unit<br>• HVAC control module |

### DTC Confirmation Procedure

1) Connect scan tool to DLC with ignition switch turned OFF.
2) Turn ON ignition switch and clear DTC using scan tool.
3) Start A/C system and select mode selector at “DEF” position.
4) Select mode selector at “FOOT” position and wait for 1 minute.
5) Check DTC.

### DTC Troubleshooting

| Step | Action | Yes | No |
|---|---|---|---|
| 1 | **DTC check**<br>1) Connect scan tool to DLC with ignition switch turned OFF.<br>2) Turn ON ignition switch and check DTC.<br>*Is there DTC B1512?* | Go to applicable DTC diag. flow. | Go to Step 2. |
| 2 | **Visual check**<br>1) Check if there is any obstruction in operating range of actuator linkage and if actuator linkage operates smoothly.<br>*Is it in good condition?* | Go to Step 3. | Obstruction in operating range of actuator linkage, actuator linkage faulty and/or internal fault of HVAC unit. |

www.cargeek.ir

 www.CarGeek.ir

| Step | Action | Yes | No |
|---|---|---|---|
| 3 | **Wire harness check**<br>1) Disconnect connector from air flow control actuator with ignition switch turned OFF.<br>2) Check for proper connection to air flow control actuator connector at “GRY/RED” and “GRY/BLK” wire terminals.<br>3) If OK, measure voltage between “GRY/RED” wire terminal of air flow control actuator connector and vehicle body ground with ignition switch turned ON when air flow selector is operation to VENT direction.<br>*Is voltage 10 – 14 V?* | Go to Step 7. | Go to Step 4. |
| 4 | **Wire harness check**<br>1) Disconnect connector from HVAC control module with ignition switch turned OFF.<br>2) Check for proper connection to HVAC control module connector at “G51-29” and “G51-30” terminals.<br>3) If OK, measure resistance between “GRY/RED” wire terminal of air flow control actuator connector and “G51-29” terminal of HVAC control module connector.<br>*Is resistance below 5 Ω?* | Go to Step 5. | “GRY/RED” wire open or high resistance circuit. |
| 5 | **Wire harness check**<br>1) Measure resistance between “GRY/RED” wire terminal of air flow control actuator connector and vehicle body ground.<br>*Is resistance infinity?* | Go to Step 6. | “GRY/RED” wire shorted to ground circuit. |
| 6 | **Wire harness check**<br>1) Measure voltage between “GRY/RED” wire terminal of air flow control actuator connector and vehicle body ground with ignition switch turned ON.<br>*Is voltage 0 V?* | Go to Step 7. | “GRY/RED” wire shorted to other circuit. |
| 7 | **Wire harness check**<br>1) Connect connector to HVAC control module with ignition switch turned OFF.<br>2) Measure voltage between “GRY/BLK” wire terminal of air flow control actuator connector and vehicle body ground with ignition switch turned ON when air flow selector is operation to DEF direction.<br>*Is voltage 10 – 14 V?* | Go to Step 11. | Go to Step 8. |
| 8 | **Wire harness check**<br>1) Disconnect connector from HVAC control module with ignition switch turned OFF.<br>2) Check for proper connection to HVAC control module connector at “G51-29” and “G51-30” terminals.<br>3) If OK, measure resistance between “GRY/BLK” wire terminal of air flow control actuator connector and “G51-30” terminal of HVAC control module connector.<br>*Is resistance below 5 Ω?* | Go to Step 9. | “GRY/BLK” wire open or high resistance circuit. |
| 9 | **Wire harness check**<br>1) Measure resistance between “GRY/BLK” wire terminal of air flow control actuator connector and vehicle body ground.<br>*Is resistance infinity?* | Go to Step 10. | “GRY/BLK” wire shorted to ground circuit. |

www.cargeek.ir

www.CarGeek.ir


| Step | Action | Yes | No |
|---|---|---|---|
| 10 | **Wire harness check**<br>1) Measure voltage between “GRY/BLK” wire terminal of air flow control actuator connector and vehicle body ground with ignition switch turned ON.<br>*Is voltage 0 V?* | Go to Step 11. | “GRY/BLK” wire shorted to other circuit. |
| 11 | **Position sensor circuit check**<br>1) Check air flow control actuator position sensor circuit referring to Step 1 to Step 6 and Step 11 to Step 12 of “DTC B1512: Air Flow Control Actuator (Position Sensor) and/or Its Circuit Malfunction: ”.<br>*Is it in good condition?* | Go to Step 12. | Repair circuit. |
| 12 | **Air flow control actuator check**<br>1) Check air flow control actuator referring to “Air Flow Control Actuator Inspection: ”.<br>*Is it in good condition?* | HVAC control module faulty. | Air flow control actuator faulty. |

## DTC B1520: Temperature Selector and/or Its Circuit Malfunction

S5JB0A7204021

### DTC Detecting Condition and Trouble Area

| DTC detecting condition | Trouble area |
|---|---|
| This DTC will be set when an internal malfunction is detected in the HVAC control module.<br>Temperature selector signal voltage is more than or less than specified value for specified time continuously. | HVAC control module (temperature selector) |

### DTC Confirmation Procedure

1) Connect scan tool to DLC with ignition switch turned OFF.
2) Turn ON ignition switch and clear DTC using scan tool.
3) Turn temperature selector to the light and left as far as it stops, repeat it 10 seconds.
4) Check DTC.

### DTC Troubleshooting

| Step | Action | Yes | No |
|---|---|---|---|
| 1 | **DTC check**<br>1) Connect scan tool to DLC with ignition switch turned OFF.<br>2) Turn ignition switch ON and clear DTC referring to “DTC Clearance: ”.<br>3) Turn ignition switch OFF position.<br>4) Turn ignition switch ON and check DTC referring to “DTC Check: ”.<br>*Is there DTC B1520?* | Go to Step 2. | Intermittent trouble. Check for intermittent referring to “Intermittent and Poor Connection Inspection: in Section 00”. |
| 2 | **HVAC control module terminal check**<br>1) Remove HVAC control module referring to “HVAC Control Module Removal and Installation: in Section 7A”.<br>2) Check for proper connection of HVAC control module connector at all terminals.<br>*Is it in good condition?* | Substitute a known-good HVAC control module and recheck. | Repair faulty condition. |

www.cargeek.ir

 www.CarGeek.ir

## DTC B1521: Blower Speed Selector and/or Its Circuit Malfunction

S5JB0A7204022

### DTC Detecting Condition and Trouble Area

| DTC detecting condition | Trouble area |
|---|---|
| This DTC will be set when an internal malfunction is detected in the HVAC control module.<br>Blower speed selector signal voltage is more than and less than specified value for specified time continuously. | HVAC control module (blower speed selector) |

### DTC Confirmation Procedure

1) Connect scan tool to DLC with ignition switch turned OFF.
2) Turn ON ignition switch and clear DTC using scan tool.
3) Turn blower speed selector to the light and left as far as it stops, repeat it 10 seconds.
4) Check DTC.

### DTC Troubleshooting

| Step | Action | Yes | No |
|---|---|---|---|
| 1 | **DTC check**<br>1) Connect scan tool to DLC with ignition switch turned OFF.<br>2) Turn ignition switch ON and clear DTC referring to “DTC Clearance: ”.<br>3) Turn ignition switch OFF position.<br>4) Turn ignition switch ON and check DTC referring to “DTC Check: ”.<br>*Is there DTC B1521?* | Go to Step 2. | Intermittent trouble. Check for intermittent referring to “Intermittent and Poor Connection Inspection: in Section 00”. |
| 2 | **HVAC control module terminal check**<br>1) Remove HVAC control module referring to “HVAC Control Module Removal and Installation: in Section 7A”.<br>2) Check for proper connection of HVAC control module connector at all terminals.<br>*Is it in good condition?* | Substitute a known-good HVAC control module and recheck. | Repair faulty condition. |

## DTC B1530: Air Intake Control Actuator (Position Sensor) and/or Its Circuit Malfunction

S5JB0A7204040

### Wiring Diagram

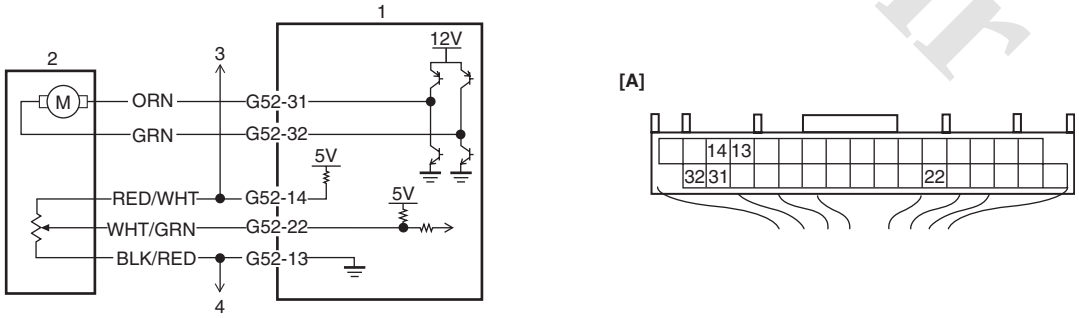


I5JB0A720027-01

| | |
|---|---|
| [A]: HVAC control module connector “G52” (harness side view) | 3. To other actuators |
| 1. HVAC control module | 4. To other sensors |
| 2. Air intake control actuator | |

www.cargeek.ir

www.CarGeek.ir


### DTC Detecting Condition and Trouble Area

**NOTE**

**When DTC B1502, B1503, B1511 and B1512 are indicated together, it is that "BLK/RED" wire circuit open.**

| DTC Detecting Condition | Trouble Area |
|---|---|
| Air intake control actuator position sensor signal voltage is more than or less than specified value for specified time continuously. | • Air intake control actuator circuit<br>• Air intake control actuator<br>• HVAC control module |

### DTC Confirmation Procedure

1) Connect scan tool to DLC with ignition switch turned OFF.
2) Turn ON ignition switch and clear DTC using scan tool.
3) Check DTC.

### DTC Troubleshooting

| Step | Action | Yes | No |
|---|---|---|---|
| 1 | **Position sensor power supply circuit check**<br>1) Disconnect air intake control actuator connector with ignition switch turned OFF.<br>2) Check for proper connection to air intake control actuator at "RED/WHT", "WHT/GRN" and "BLK/RED" wire terminals.<br>3) If OK, measure voltage between "RED/WHT" wire terminal of air flow control actuator connector and vehicle body ground with ignition switch turned ON.<br>*Is voltage 4 – 6 V?* | Go to Step 6. | Go to Step 2. |
| 2 | **Position sensor power supply circuit check**<br>1) Disconnect temperature control actuator connector with ignition switch turned OFF.<br>2) Measure voltage between "RED/WHT" wire terminal of air intake control actuator connector and vehicle body ground with ignition switch turned ON.<br>*Is voltage 4 – 6 V?* | Temperature control actuator faulty. | Go to Step 3. |
| 3 | **Position sensor power supply circuit check**<br>1) Disconnect air flow control actuator connector with ignition switch turned OFF.<br>2) Measure voltage between "RED/WHT" wire terminal of air intake control actuator connector and vehicle body ground with ignition switch turned ON.<br>*Is voltage 4 – 6 V?* | Air flow control actuator faulty. | Go to Step 4. |
| 4 | **Position sensor power supply circuit check**<br>1) Disconnect connector from HVAC control module with ignition switch turned OFF.<br>2) Check for proper connection to HVAC control module connector at "G52-14", "G52-22" and "G52-13" terminals.<br>3) If OK, measure resistance between "RED/WHT" wire terminal of air intake control actuator connector and "G52-14" terminal of HVAC control module connector.<br>*Is resistance below 5 Ω?* | Go to Step 5. | "RED/WHT" wire open or high resistance circuit. |

www.cargeek.ir

 www.CarGeek.ir

| Step | Action | Yes | No |
|---|---|---|---|
| 5 | **Position sensor power supply circuit check**<br>1) Measure resistance between “RED/WHT” wire terminal of air intake control actuator connector and vehicle body ground.<br>*Is resistance infinity?* | Go to Step 6. | “RED/WHT” wire shorted to ground circuit. |
| 6 | **Position sensor power supply circuit check**<br>1) Measure voltage between “RED/WHT” wire terminal of air flow control actuator connector and vehicle body ground with ignition switch turned ON.<br>*Is voltage 0 V?* | Go to Step 7. | “RED/WHT” wire shorted to other circuit. |
| 7 | **Position sensor signal circuit check**<br>1) Connect HVAC control module connector with ignition switch turned OFF.<br>2) Measure voltage between “WHT/GRN” wire terminal of air intake control actuator connector and vehicle body ground with ignition switch turned ON.<br>*Is voltage 4 – 6 V?* | Go to Step 11. | Go to Step 8. |
| 8 | **Position sensor signal circuit check**<br>1) Disconnect connector from HVAC control module with ignition switch turned OFF.<br>2) Measure resistance between “WHT/GRN” wire terminal of air intake control actuator connector and “G52-22” terminal of HVAC control module connector.<br>*Is resistance below 5 Ω?* | Go to Step 9. | “WHT/GRN” wire open or high resistance circuit. |
| 9 | **Position sensor signal circuit check**<br>1) Measure resistance between “WHT/GRN” wire terminal of air intake control actuator connector and vehicle body ground.<br>*Is resistance infinity?* | Go to Step 10. | “WHT/GRN” wire shorted to ground circuit. |
| 10 | **Position sensor signal circuit check**<br>1) Measure voltage between “WHT/GRN” wire terminal of air intake control actuator connector and vehicle body ground with ignition switch turned ON.<br>*Is voltage 0 V?* | Go to Step 11. | “WHT/GRN” wire shorted to other circuit. |
| 11 | **Position sensor ground circuit check**<br>1) Connect HVAC control module connector with ignition switch turned OFF.<br>2) Measure resistance between “BLK/RED” wire terminal of air intake control actuator connector and vehicle body ground.<br>*Is resistance below 5 Ω?* | Go to Step 12. | Go to Step 13. |
| 12 | **Position sensor ground circuit check**<br>1) Measure resistance between “G52-13” terminal of HVAC control module connector and vehicle body ground.<br>*Is resistance below 5 Ω?* | “BLK/RED” wire open or high resistance circuit. | HVAC control module faulty. |
| 13 | **Air intake control actuator check**<br>1) Check air intake control actuator referring to “Air Intake Control Actuator Inspection: ”.<br>*Is it in good condition?* | HVAC control module faulty. | Air intake control actuator faulty. |

www.cargeek.ir

www.CarGeek.ir


## DTC B1531: Air Intake Control Actuator and/or Its Circuit Malfunction

S5JB0A7204041

### Wiring Diagram

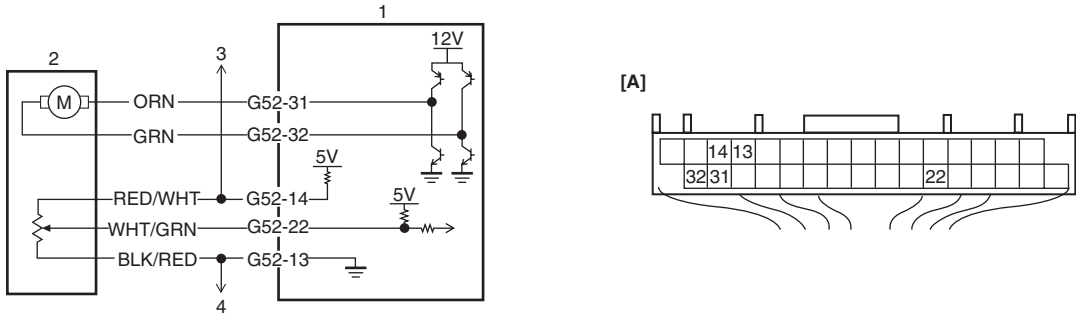


I5JB0A720027-01

| | |
|---|---|
| [A]: HVAC control module connector “G52” (harness side view) | 3. To other actuators |
| 1. HVAC control module | 4. To other sensors |
| 2. Air intake control actuator | |

### DTC Detecting Condition and Trouble Area

| DTC Detecting Condition | Trouble Area |
|---|---|
| Difference between target opening and actual opening is more than specified value even though air intake control actuator has operated for 15 seconds. | • Air intake control actuator circuit<br>• Air intake control linkage<br>• Air intake control actuator<br>• HVAC unit<br>• HVAC control module |

### DTC Confirmation Procedure

1) Connect scan tool to DLC with ignition switch turned OFF.
2) Turn ON ignition switch and clear DTC using scan tool.
3) Start A/C system and select air intake selector at “FRE” position.
4) Select air intake selector at “REC” position and wait for 1 min. or more.
5) Check DTC.

### DTC Troubleshooting

| Step | Action | Yes | No |
|---|---|---|---|
| 1 | **Visual check**<br>1) Check if there is any obstruction in operating range of actuator linkage and if actuator linkage operates smoothly.<br>*Is it in good condition?* | Go to Step 2. | Obstruction in operating range of actuator linkage, actuator linkage faulty and/or internal fault of HVAC unit. |
| 2 | **Wire harness check**<br>1) Disconnect connector from air intake control actuator with ignition switch turned OFF.<br>2) Check for proper connection to temperature control actuator connector at “ORN” and “GRN” wire terminals.<br>3) If OK, measure voltage between “ORN” wire terminal of temperature control actuator connector and vehicle body ground with ignition switch turned ON when air intake selector is operation to FRE position.<br>*Is voltage 10 – 14 V?* | Go to Step 6. | Go to Step 3. |

www.cargeek.ir

 www.CarGeek.ir

| Step | Action | Yes | No |
|---|---|---|---|
| 3 | **Wire harness check**<br>1) Disconnect connector from HVAC control module with ignition switch turned OFF.<br>2) Check for proper connection to HVAC control module connector at “G52-31” and “G52-32” terminals.<br>3) If OK, measure resistance between “ORN” wire terminal of air intake control actuator connector and “G52-31” terminal of HVAC control module connector.<br>*Is resistance below 5 Ω?* | Go to Step 4. | “ORN” wire open or high resistance circuit. |
| 4 | **Wire harness check**<br>1) Measure resistance between “ORN” wire terminal of air intake control actuator connector and vehicle body ground.<br>*Is resistance infinity?* | Go to Step 5. | “ORN” wire shorted to ground circuit. |
| 5 | **Wire harness check**<br>1) Measure voltage between “ORN” wire terminal of air intake control actuator connector and vehicle body ground with ignition switch turned ON.<br>*Is voltage 0 V?* | Go to Step 6. | “ORN” wire shorted to other circuit. |
| 6 | **Wire harness check**<br>1) Connect connector to HVAC control module with ignition switch turned OFF.<br>2) Measure voltage between “GRN” wire terminal of air intake control actuator connector and vehicle body ground with ignition switch turned ON when temperature selector is operation to REC position.<br>*Is voltage 10 – 14 V?* | Go to Step 10. | Go to Step 7. |
| 7 | **Wire harness check**<br>1) Disconnect connector from HVAC control module with ignition switch turned OFF.<br>2) Check for proper connection to HVAC control module connector at “G52-31” and “G52-32” terminals.<br>3) If OK, measure resistance between “GRN” wire terminal of air intake control actuator connector and “G52-32” terminal of HVAC control module connector.<br>*Is resistance below 5 Ω?* | Go to Step 8. | “GRN” wire open or high resistance circuit. |
| 8 | **Wire harness check**<br>1) Measure resistance between “GRN” wire terminal of air intake control actuator connector and vehicle body ground.<br>*Is resistance infinity?* | Go to Step 9. | “GRN” wire shorted to ground circuit. |
| 9 | **Wire harness check**<br>1) Measure voltage between “GRN” wire terminal of air intake control actuator connector and vehicle body ground with ignition switch turned ON.<br>*Is voltage 0 V?* | Go to Step 10. | “GRN” wire shorted to other circuit. |

www.cargeek.ir

www.CarGeek.ir


| Step | Action | Yes | No |
|---|---|---|---|
| 10 | **Position sensor circuit check**<br>1) Check air intake control actuator position sensor circuit referring to Step 1 to Step 6 and Step 11 to Step 12 of “DTC B1530: Air Intake Control Actuator (Position Sensor) and/or Its Circuit Malfunction: ”.<br>*Is it in good condition?* | Go to Step 11. | Repair circuit. |
| 11 | **Air intake control actuator check**<br>1) Check intake air control actuator referring to “Air Intake Control Actuator Inspection: ”.<br>*Is it in good condition?* | HVAC control module faulty. | Air intake control actuator faulty. |

## DTC B1546: A/C Refrigerant Pressure Malfunction

S5JB0A7204042

### DTC Detecting Condition and Trouble Area

| DTC Detecting Condition | Trouble Area |
|---|---|
| Outside temperature is more than specified value. However, refrigerant pressure is less than specified value. | • Refrigerant pressure sensor circuit<br>• Refrigerant pressure sensor<br>• Outside air temperature sensor circuit<br>• Outside air temperature sensor<br>• HVAC control module<br>• ECM<br>• BCM |

### DTC Confirmation Procedure

1) Connect scan tool to DLC with ignition switch turned OFF.
2) Turn ON ignition switch and clear DTC using scan tool.
3) Start engine and warm up to normal operating temperature.
4) Start A/C system for 1 min. or more.
5) Check DTC.

### DTC Troubleshooting

| Step | Action | Yes | No |
|---|---|---|---|
| 1 | **DTC check**<br>1) Connect scan tool to DLC with ignition switch turned OFF.<br>2) Turn ON ignition switch and clear DTC.<br>3) Ignition switch turned OFF position.<br>4) Turn ON ignition switch and check DTC.<br>*Is there DTC B1546?* | Go to Step 2. | Confirm that vehicle A/C system condition referring “A/C System Performance Inspection: ”, and recheck DTC. |
| 2 | **Refrigerant pressure check**<br>1) Connect scan tool to DLC with ignition switch OFF.<br>2) Ignition switch ON turned ON position.<br>3) Check refrigerant pressure displayed on scan tool.<br>*Is it 340 kPa or more?* | Go to Step 3. | Charge refrigerant and Confirm that vehicle A/C system condition referring to “A/C System Performance Inspection: ”. And then recheck DTC. |
| 3 | **A/C system check**<br>1) Confirm that vehicle A/C system condition referring to “A/C System Performance Inspection: ”.<br>*Is A/C system in good condition?* | Go to Step 4. | Repair and/or replace. |

www.cargeek.ir

 www.CarGeek.ir

| Step | Action | Yes | No |
|---|---|---|---|
| 4 | **Refrigerant pressure sensor check**<br>1) Check refrigerant pressure sensor referring to “A/C Refrigerant Pressure Sensor and Its Circuit Inspection: ”.<br>*Are refrigerant pressure sensor and/or its circuit in good condition?* | Go to Step 5. | Repair circuit and/or replace refrigerant pressure sensor. |
| 5 | **Outside temperature sensor check**<br>1) Check outside temperature sensor referring to “Outside Air Temperature Sensor Inspection (If Equipped): in Section 9C”.<br>*Is outside temperature sensor in good condition?* | Replace HVAC control module. | Replace outside temperature sensor. |

## DTC B1551: Serial Communication Circuit Malfunction

S5JB0A7204043

### Wiring Diagram

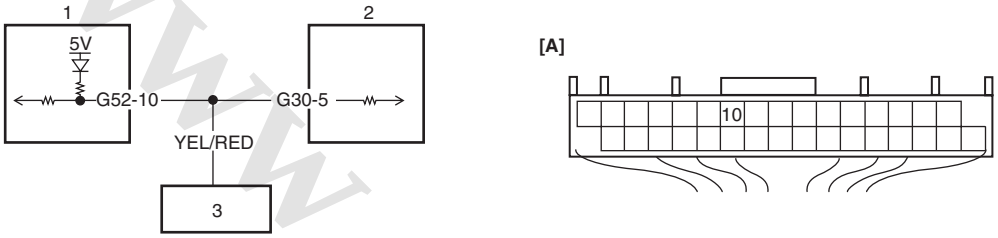


I5JB0A720029-01

| | |
|---|---|
| [A]: HVAC control module connector “G52” (harness side view) | 2. BCM |
| 1. HVAC control module | 3. Information display |

### DTC Detecting Condition and Trouble Area

| DTC detecting condition | Trouble area |
|---|---|
| Serial communication signal is more than or less than specified value for specified time continuously. | • Serial communication line of BCM<br>• BCM<br>• Information display<br>• HVAC control module |

### DTC Confirmation Procedure

1) Connect scan tool to DLC with ignition switch turned OFF.
2) Turn ON ignition switch and clear DTC using scan tool.
3) Check DTC.

www.cargeek.ir

www.CarGeek.ir


**DTC Troubleshooting**

| Step | Action | Yes | No |
|---|---|---|---|
| 1 | **DTC check**<br>1) Connect scan tool to DLC with ignition switch turned OFF.<br>2) Turn ignition switch ON and clear DTC referring to “DTC Clearance: ”.<br>3) Disconnect connector from information display with ignition switch turned OFF.<br>4) Turn ignition switch ON and check DTC referring to “DTC Check: ”.<br>*Is there DTC B1551?* | Go to Step 2. | Information display faulty. |
| 2 | **Wire harness check**<br>1) Disconnect connectors from BCM and HVAC control module.<br>2) Measure resistance between “G30-5” terminal of BCM connector and “G52-10” terminal of HVAC control module connector.<br>*Is resistance below 5 Ω?* | Go to Step 3. | “YEL/RED” wire open or high resistance circuit. |
| 3 | **Wire harness check**<br>1) Measure resistance between “G52-10” terminal of HVAC control module connector and vehicle body ground.<br>*Is resistance infinity?* | Go to Step 4. | “YEL/RED” wire shorted to ground circuit. |
| 4 | **Wire harness check**<br>1) Measure voltage between “G52-10” terminal of HVAC control module connector and vehicle body ground with ignition switch turned ON.<br>*Is voltage 0 V?* | Go to Step 5. | “YEL/RED” wire shorted to other circuit. |
| 5 | **Serial communication signal check**<br>1) Connect connectors to BCM and HVAC control module.<br>2) Using oscilloscope, check that serial communication signal at “G30-5” is outputted referring to “Voltage Check” in “Inspection of BCM and its Circuits:  in Section 10B”.<br>*Is serial communication signal outputted at “G30-5” terminal of BCM connector?* | HVAC control module faulty. | BCM (included in junction block assembly) faulty. |

www.cargeek.ir

 www.CarGeek.ir

## DTC B1552: Serial Communication Circuit Malfunction

S5JB0A7204044

### DTC Detecting Condition and Trouble Area

| DTC detecting condition | Trouble area |
|---|---|
| Data received by HVAC control module from BCM is erroneous continuously. | • BCM<br>• HVAC control module |

### DTC Confirmation Procedure

1) Connect scan tool to DLC with ignition switch turned OFF.
2) Turn ON ignition switch and clear DTC using scan tool.
3) Check DTC.

### DTC Troubleshooting

| Step | Action | Yes | No |
|---|---|---|---|
| 1 | **Serial communication signal data check**<br>1) Connect scan tool to DLC with ignition switch turned OFF.<br>2) Start engine and select “DATA LIST” mode on scan tool.<br>3) Check “Refrigerant Pressure”, “Vehicle Speed”, “Coolant Temp” and “Outside Air Temp” varies displayed on scan tool.<br>*Is displayed each varies described varies in “Scan Tool Data: ”?* | Intermittent trouble. Check for intermittent referring to “Intermittent and Poor Connection Inspection: in Section 00”. | Go to Step 2. |
| 2 | **Serial communication signal check**<br>1) Connect connectors to BCM and HVAC control module.<br>2) Using oscilloscope, check that serial communication signal at “G30-5” is outputted referring to “Voltage Check” of “Inspection of BCM and its Circuits: in Section 10B”.<br>*Is serial communication signal outputted at “G30-5” terminal of BCM connector?* | HVAC control module faulty. | BCM (included in junction block assembly) faulty. |

## DTC B1553: CAN Communication Circuit Malfunction

S5JB0A7204045

### DTC Detecting Condition and Trouble Area

| DTC detecting condition | Trouble area |
|---|---|
| HVAC control module receives error code from BCM continuously. | • CAN communication circuit<br>• BCM<br>• ECM<br>• HVAC control module |

### DTC Troubleshooting

| Step | Action | Yes | No |
|---|---|---|---|
| 1 | **DTC check**<br>1) Connect scan tool to DLC with ignition switch turned OFF.<br>2) Check ECM and BCM for DTC.<br>*Is there DTC(s)?* | Go to applicable DTC diag. flow. | Substitute a known-good HVAC control module and recheck. |

www.cargeek.ir

www.CarGeek.ir


## DTC B1556: Camshaft Position (CMP) Sensor and/or Its Circuit Malfunction

S5JB0A7204046

### DTC Detecting Condition and Trouble Area

| DTC detecting condition | Trouble area |
|---|---|
| HVAC control module receives error code from BCM continuously. | • CMP sensor circuit<br>• CMP sensor<br>• HVAC control module |

### DTC Troubleshooting

| Step | Action | Yes | No |
|---|---|---|---|
| 1 | **DTC check**<br>1) Connect scan tool to DLC with ignition switch turned OFF.<br>2) Check ECM for DTC.<br>*Is there DTC P0340?* | Go to applicable DTC diag. flow. | Substitute a known-good HVAC control module and recheck. |

## DTC B1557: Wheel Speed Sensor and/or Its Circuit Malfunction

S5JB0A7204047

### DTC Detecting Condition and Trouble Area

| DTC detecting condition | Trouble area |
|---|---|
| HVAC control module receives error code from BCM continuously. | • Wheel speed sensor circuit<br>• ABS control module<br>• Wheel speed sensor<br>• HVAC control module |

### DTC Troubleshooting

| Step | Action | Yes | No |
|---|---|---|---|
| 1 | **DTC check**<br>1) Connect scan tool to DLC with ignition switch turned OFF.<br>2) Check ABS for DTC.<br>*Is there DTC C1021, C1022 / C1025, C1026 / C1031, C1032 / C1035, C1036?* | Go to applicable DTC diag. flow. | Substitute a known-good HVAC control module and recheck. |

## DTC B1561: Engine Coolant Temperature Sensor and/or Its Circuit Malfunction

S5JB0A7204048

### DTC Detecting Condition and Trouble Area

| DTC detecting condition | Trouble area |
|---|---|
| HVAC control module receives error code from BCM continuously. | • ECT sensor circuit<br>• ECT sensor<br>• HVAC control module |

### DTC Troubleshooting

| Step | Action | Yes | No |
|---|---|---|---|
| 1 | **DTC check**<br>1) Connect scan tool to DLC with ignition switch turned OFF.<br>2) Check ECM for DTC.<br>*Are there DTC P0116, P0117 or P0118?* | Go to applicable DTC diag. flow. | Substitute a known-good HVAC control module and recheck. |

www.cargeek.ir

 www.CarGeek.ir

## DTC B1562: Outside Air Temperature Sensor and/or Its Circuit Malfunction

S5JB0A7204049

### DTC Detecting Condition and Trouble Area

| DTC detecting condition | Trouble area |
|---|---|
| HVAC control module receives error code from BCM continuously. | • Outside air temperature sensor circuit<br>• Outside air temperature sensor<br>• HVAC control module |

### DTC Troubleshooting

| Step | Action | Yes | No |
|---|---|---|---|
| 1 | **DTC check**<br>1) Connect scan tool to DLC with ignition switch turned OFF.<br>2) Check BCM for DTC.<br>*Are there DTC B1141, B1142 or B1143?* | Go to applicable DTC diag. flow. | Substitute a known-good HVAC control module and recheck. |

## DTC B1563: A/C Refrigerant Pressure Sensor and/or Its Circuit Malfunction

S5JB0A7204050

### DTC Detecting Condition and Trouble Area

| DTC detecting condition | Trouble area |
|---|---|
| HVAC control module receives error code from BCM continuously. | • A/C refrigerant pressure sensor circuit<br>• A/C refrigerant pressure sensor<br>• HVAC control module |

### DTC Troubleshooting

| Step | Action | Yes | No |
|---|---|---|---|
| 1 | **DTC check**<br>1) Connect scan tool to DLC with ignition switch turned OFF.<br>2) Check ECM for DTC.<br>*Are there DTC P0532 or P0533?* | Go to applicable DTC diag. flow. | Substitute a known-good HVAC control module and recheck. |

## HVAC Control Module and Its Circuits Inspection

S5JB0A7204052

**⚠ CAUTION**

**HVAC control module can not be checked by itself.**
**It is strictly prohibited to connect voltmeter to HVAC control module with couplers disconnected from it.**

HVAC control module and its circuits can be checked at HVAC control module wiring couplers by measuring voltage.

### Voltage Check

1) Remove HVAC control module. Refer to “HVAC Control Module Removal and Installation: in Section 7A”.
2) Connect HVAC control module and body control module couplers to HVAC control module and body control module.
3) Check each terminal voltage with couplers connected by referring to “HVAC Control Module Voltage Table: ”.

**Terminal arrangement of HVAC control module (viewed from harness side)**

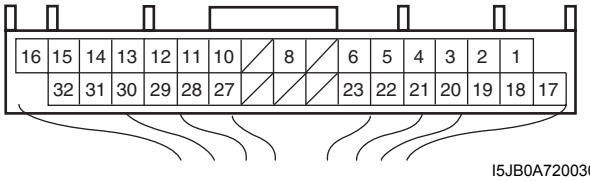


I5JB0A720030-02

www.cargeek.ir

**HVAC Control Module Voltage Table**

| Terminal | Wire color | Circuit | Normal value | Condition |
|---|---|---|---|---|
| G52-1 | PPL/RED | Power supply | 10 – 14 V | Ignition switch turned ON. |
| G52-2 | WHT | Electric power source for back-up | 10 – 14 V | Constantly. |
| G52-3 | PPL/WHT | Serial communication line of data link connector | 10 – 14 V | Ignition switch turned ON. |
| G52-4 | RED/YEL | Illumination switch | 0 – 1 V | Ignition switch turned ON, lighting switch OFF position. |
| | | | 10 – 14 V | Ignition switch turned ON, lighting switch ON position. |
| G52-5 | RED/GRN | Illumination ground | 0 – 1 V | Constantly. |
| G52-6 | PNK/BLK | Alarm indicator | — | — |
| G52-8 | BLK/RED | Rear defogger driving signal | 10 – 14 V | Ignition switch turned ON, rear defogger switch ON. |
| | | | 0 – 1 V | Ignition switch turned ON, rear defogger switch OFF. |
| G52-10 | YEL/RED | Serial communication line from BCM | Refer to “Inspection of BCM and its Circuits: in Section 10B”. | |
| G52-11 | PNK/GRN | Serial communication line to BCM | Refer to “Reference waveform No. 1: ”. | |
| G52-12 | YEL | Ground for sunload sensor | 0 – 1 V | Constantly. |
| G52-13 | BLK/RED | Ground for sensors | 0 – 1 V | Constantly. |
| G52-14 | RED/WHT | Output of 5 V power source for position sensor of actuators | 4 – 6 V | Ignition switch turned ON. |
| G52-15 | RED/BLK | Blower motor control voltage feedback | Approx. 12 V | Ignition switch turned ON, blower speed selector OFF. |
| | | | Approx. 8 V | Ignition switch turned ON, blower speed selector 1st position. |
| | | | Approx. 7 V | Ignition switch turned ON, blower speed selector 2nd position. |
| | | | Approx. 5.5 V | Ignition switch turned ON, blower speed selector 3rd position. |
| | | | Approx. 4.5 V | Ignition switch turned ON, blower speed selector 4th position. |
| | | | Approx. 3 V | Ignition switch turned ON, blower speed selector 5th position. |
| | | | Approx. 1.3 V | Ignition switch turned ON, blower speed selector 6th position. |
| | | | Approx. 0.3 V | Ignition switch turned ON, blower speed selector 7th position. |
| | | | Less than 0.3 V | Ignition switch turned ON, blower speed selector 8th position. |
| G52-16 | PPL/GRN | Blower motor controller | 0 – 1 V | Ignition switch turned ON, blower speed selector OFF. |
| | | | Approx. 4.2 V | Ignition switch turned ON, blower speed selector 1st – 7th position. |
| | | | Approx. 5.7 V | Ignition switch turned ON, blower speed selector 8th position. |
| G52-17 | BLK | Ground for HVAC control module | 0 – 1 V | Constantly. |
| G52-18 | PNK | Sunload sensor signal | Approx. 3 V | Ignition switch turned ON, amount of insolation is 500 W/m$^2$ |
| | | | Approx. 5 V | Ignition switch turned ON, amount of insolation is 0 W/m$^2$ |

www.cargeek.ir

 www.CarGeek.ir

| Terminal | Wire color | Circuit | Normal value | Condition |
|---|---|---|---|---|
| G52-19 | WHT/BLK | Evaporator temperature sensor signal | Approx. 3.6 V | Ignition switch turned ON, evaporator temperature 0 °C (32 °F). |
| | | | Approx. 3.4 V | Ignition switch turned ON, evaporator temperature 10 °C (50 °F). |
| | | | Approx. 2.4 V | Ignition switch turned ON, evaporator temperature 25 °C (77 °F). |
| G52-20 | BLU/BLK | Inside air temperature sensor signal | Approx. 2.4 V | Ignition switch turned ON, room temperature 25 °C (77 °F). |
| | | | Approx. 3.8 V | Ignition switch turned ON, room temperature 0 °C (32 °F). |
| G52-21 | WHT/RED | Temperature control actuator position sensor signal | Approx. 4.5 V | Ignition switch turned ON, temperature selector MAX COOL position. |
| | | | Approx. 1.5 V | Ignition switch turned ON, temperature selector MAX HOT position. |
| G52-22 | WHT/GRN | Air intake control actuator position sensor signal | Approx. 3.8 V | Ignition switch turned ON, air intake selector “REC” position. |
| | | | Approx. 1.5 V | Ignition switch turned ON, air intake selector “FRE” position. |
| G52-23 | WHT/BLU | Air flow control actuator position sensor signal | Approx. 4.2V | Ignition switch turned ON, air flow selector “VENT” position. |
| | | | Approx. 3.2 V | Ignition switch turned ON, air flow selector “BI-LEVEL” position |
| | | | Approx. 2 V | Ignition switch turned ON, air flow selector “FOOT” position. |
| | | | Approx. 1.5 V | Ignition switch turned ON, air flow selector “DEF / FOOT” position. |
| | | | Approx. 0.6 V | Ignition switch turned ON, air flow selector “DEF” position. |
| G52-27 | GRY | Temperature control actuator (COOL) | 10 – 14 V | Ignition switch turned ON, temperature control actuator is working in operation from HOT to COOL position. |
| | | | 0 – 1 V | Ignition switch turned ON, except the above condition. |
| G52-28 | GRY/BLU | Temperature control actuator (HOT) | 10 – 14 V | Ignition switch turned ON, temperature control actuator is working in operation from COOL to HOT position. |
| | | | 0 – 1 V | Ignition switch turned ON, except the above condition. |
| G52-29 | GRY/RED | Air flow control actuator (VENT) | 10 – 14 V | Ignition switch turned ON, air flow control actuator is working in operation from DEF to VENT position. |
| | | | 0 – 1 V | Ignition switch turned ON, except the above condition. |
| G52-30 | GRY/BLK | Air flow control actuator (DEF) | 10 – 14 V | Ignition switch turned ON, air flow control actuator is working in operation from VENT to DEF position. |
| | | | 0 – 1 V | Ignition switch turned ON, except the above condition. |
| G52-31 | ORN | Air intake control actuator (FRE) | 10 – 14 V | Ignition switch turned ON, air intake control actuator is working in operation from REC to FRE position. |
| | | | 0 – 1 V | Ignition switch turned ON, except the above condition. |
| G52-32 | GRN | Air intake control actuator (REC) | 10 – 14 V | Ignition switch turned ON, air intake control actuator is working in operation from FRE to REC position. |
| | | | 0 – 1 V | Ignition switch turned ON, except the above condition. |

www.cargeek.ir

www.CarGeek.ir


**Reference waveform No. 1**
Serial communication line to BCM (1)

| | |
|---|---|
| Measurement terminal | CH1: “G52-11” to “G52-17” |
| Oscilloscope setting | CH1: 5 V / DIV<br>TIME: 20 ms / DIV |
| Measurement condition | Ignition switch is at ON position |

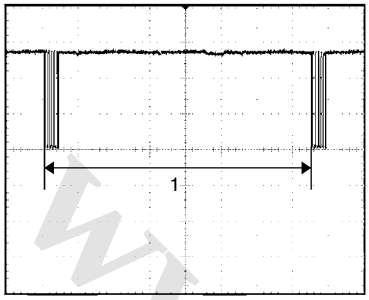


I5JB0A720091-01

## A/C System Inspection at ECM

S5JB0A7204051

**⚠ CAUTION**

- **ECM connectors are waterproofed. Each terminal of the ECM connectors is sealed up with the grommet. Therefore, do not measure circuit voltage and resistance by inserting the tester’s probe into the sealed terminal at the harness side. Or, ECM and its circuits may be damaged by water.**
- **ECM (PCM) cannot be checked by itself. It is strictly prohibited to connect voltmeter or ohmmeter to ECM (PCM) with couplers disconnected from it.**

**Voltage Check**
ECM (PCM) and its circuits can be checked at ECM (PCM) wiring couplers by measuring voltage as follows. Refer to “Inspection of ECM and Its Circuits: in Section 1A”.

- C37-12 A/C refrigerant pressure sensor signal
- C37-14 Output of 5 V power source
- C37-15 Ground for ECM
- C37-24 Engine coolant temp. (ECT) sensor signal
- C37-29 Ground for ECM
- C37-30 Ground for ECM
- C37-48 Ground for ECM
- C37-52 CMP sensor signal
- C37-57 Ground for sensors
- C37-58 Ground for ECM
- E23-4 CAN (high) communication line (active high signal) to ABS control module
- E23-16 Main power supply
- E23-19 CAN (low) communication line (active low signal) to ABS control module
- E23-46 Radiator fan relay No.1 output
- E23-47 Radiator fan relay No.2 output
- E23-48 Radiator fan relay No.3 output
- E23-49 A/C compressor relay output

www.cargeek.ir

 www.CarGeek.ir

# Repair Instructions

## Operation Procedure for Charging A/C with Refrigerant

S5JB0A7206001

**⚠ WARNING**

- **Your eyes should not be exposed to refrigerant (liquid).**
  **Any liquid Refrigerant-134a escaping by accident shows a temperature as low as approx. –6 °C (21.2 °F) below freezing point. Should liquid HFC-134a (R-134a) get into your eyes, it may cause a serious injury. To protect your eyes against such accident, it is necessary to always wear goggles. Should it occur that HFC-134a (R-134a) strikes your eye(s), consult a doctor immediately.**
  - **Do not use your hand to rub the affected eye(s). Instead, use quantities of fresh cold water to splash it over the affected area to gradually raise temperature of such area above freezing point.**
  - **Obtain proper treatment as soon as possible from a doctor or eye specialist.**
- **Should the liquid refrigerant HFC-134a (R-134a) is exposed to your skin, the affected area should be treated in the same manner as when skin is frostbitten or frozen.**
- **Do not handle refrigerant near any place where welding or steam cleaning is performed.**
- **Refrigerant should be kept in a cold and dark place. It should never be stored in any place where temperature is high, e.g. where exposed to direct sun light, close to fire or inside vehicle (including trunk room).**
- **Avoid breathing fume produced when HFC-134a (R-134a) is burned. Such fume may be hazardous to your health.**

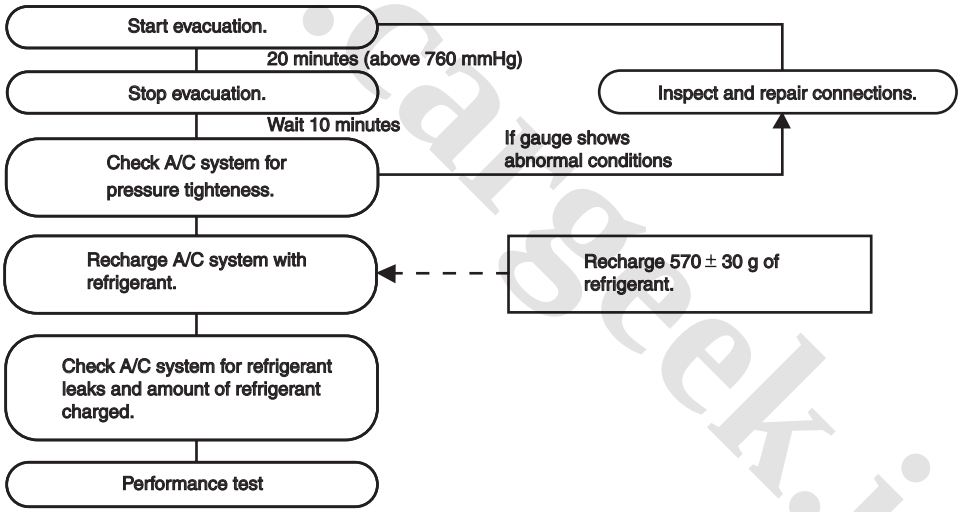


I5JB0A720031-02

www.cargeek.ir

www.CarGeek.ir


**Recovery**

When discharging refrigerant out of A/C system, always recover it by using refrigerant recovery and recycling equipment (1). Discharging refrigerant HFC-134a (R134a) into atmosphere would cause adverse effect to environments.

**NOTE**

- **After recovering refrigerant from system the amount of removed compressor oil must be measured for replenishing compressor oil. Refer to "Precautions on Replenishing Compressor Oil: ".**
- **When handling recovery and recycling equipment, be sure to follow the instruction manual for the equipment.**

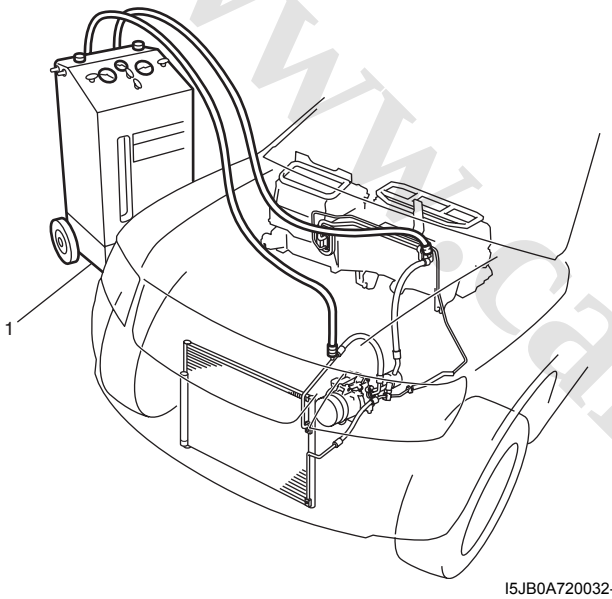


I5JB0A720032-01

**Evacuation**

**⚠ CAUTION**

**Do not evacuate before recovering refrigerant in system.**

**NOTE**

**Once A/C system circuit is opened (exposed to atmospheric air) air conditioning system must be evacuated by using a vacuum pump. The A/C system should be attached with a manifold gauge set, and should be evacuated for approx. 20 minutes.**

1) Connect high charging hose (1) and low charging hose (2) of manifold gauge set (3) respectively as follows:
   High charging hose (1) → High pressure charging valve (4) on discharge hose
   Low charging hose (2) → Low pressure charging valve (5) on suction pipe
2) Attach center charging hose (6) of manifold gauge set (3) to vacuum pump (7).
3) Operate vacuum pump (7), and then open discharge-side valve (9) (Hi) of manifold gauge set (3).
   If there is no blockage in the system, there will be an indication on high pressure gauge (10).
   In this case, open the other-side valve (8) (Lo) of the set and repair the system.
4) Approx. 10 minutes later, low pressure gauge (11) should show a vacuum lower than –100 kPa (–1.0 kg/cm $^2$, –760 mmHg, –14.2 psi) providing no leakage exists.

**NOTE**

- **If the system does not show a vacuum below –100 kPa (–1.0 kg/cm$^2$, –760 mmHg, –14.2 psi), close both valves, stop vacuum pump and watch movement of low pressure gauge.**
- **Increase in the gauge reading suggests existence of leakage. In this case, repair the system before continuing its evacuation.**
- **If the gauge shows a stable reading (suggesting no leakage), continue evacuation.**

5) Evacuation should be carried out for a total of at least 20 minutes.
6) Continue evacuation until low pressure gauge indicates a vacuum less than –100 kPa (–1.0 kg/cm$^2$, –760 mmHg, –14.2 psi), and then close both valves (8), (9).
7) Stop vacuum pump (7). Disconnect center charging hose (6) from pump inlet. Now, the system is ready for charging refrigerant.

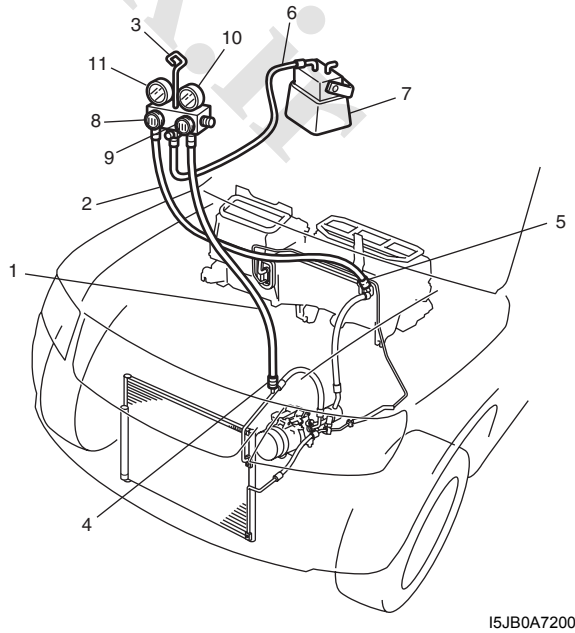


I5JB0A720033-01

www.cargeek.ir

www.CarGeek.ir

**Checking of A/C System for Pressure Leaks**
After completing the evacuation, close manifold gauge high pressure valve (Hi) and low-pressure valve (Lo) and wait 10 minutes. Verify that low-pressure gauge reading has not changed.

**⚠ CAUTION**

**If the gauge reading moves closer to "0", there is a leak somewhere. Inspect the tubing connections, make necessary corrections. And then evacuate system once again and make sure that there are no leaks.**

**Charge**

**⚠ CAUTION**

- **Because the sight glass is not used for this A/C system, do not perform an additional charge to the A/C system. To charge the proper amount of refrigerant, recover and evacuate the A/C system first. And then, charge the proper amount of refrigerant into the A/C system.**
- **Always charge through low pressure-side of A/C system at after the initial charging is performed from the high-pressure side with the engine stopped.**
- **Never charge to high pressure-side of A/C system with engine running.**
- **Do not charge while compressor is hot.**
- **When installing tap valve to refrigerant container to make a hole there through, carefully follow directions given by manufacturer.**
- **A pressure gauge should always be used before and during charging.**
- **The refrigerant container should be emptied of refrigerant when discarding it.**
- **The refrigerant container should not be heated up to 40 °C (104 °F) or over.**
- **Refrigerant container should not be reversed in direction during charging. Reversing in direction causes liquid refrigerant to enter compressor, causing troubles, such as compression of liquid refrigerant and the like.**

**NOTE**

**The A/C system contains HFC-134a (R-134a). Described here is a method to charge the A/C system with refrigerant from the refrigerant service container.**
**When charging refrigerant recovered by using the refrigerant and recycling equipment (when recycling refrigerant), follow the procedure described in the equipment manufacturer's instruction manual.**

Charge proper amount of refrigerant accurately in accordance with the following procedure.

**Specified amount of refrigerant**
**570 ± 30 g (20.1 ± 1.0 oz)**

The initial charging of the A/C system is performed from the high-pressure side with the engine stopped.
And next, this method must be followed by charging from the low-pressure side with the engine running.

1) Check to make sure that hoses are routed properly after evacuating the system.
2) Connect low charging hose (1) and high charging hose (2) of the manifold gauge set (3) in position. Thus open refrigerant container valve (4) to purge the charging line.
3) Open the high-pressure side valve (6) and charge refrigerant to system.
4) After a while, open the low-pressure side valve (5) and close the high-pressure side valve (6).

**⚠ WARNING**

**Make sure that high pressure-side valve is closed securely.**

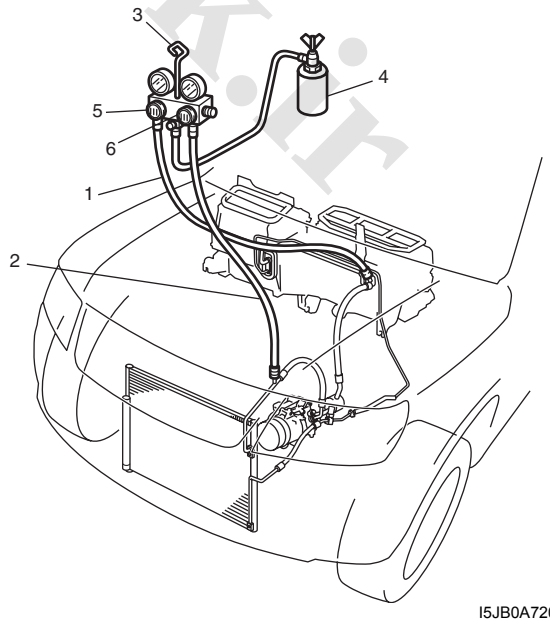

I5JB0A720034-01

www.cargeek.ir

www.CarGeek.ir


5) Start engine and keep engine speed at 1,500 rpm. Then, operate A/C system.
6) Charge A/C system with refrigerant in vapor state. At this time, refrigerant container should be held upright.
7) When refrigerant container (3) is emptied, the use following procedure to replace it with a new refrigerant container (3).
   a) Close low pressure valve.
   b) Replace empty container (3) with a refrigerant container which has been charged with refrigerant. When using refrigerant container tap valve (4), use the following procedure for replacement.
      i) Retract needle (1) and remove refrigerant container tap valve (4) by loosening its plate nut (2).
      ii) Install previously-removed refrigerant container tap valve (4) to a new refrigerant container (3).

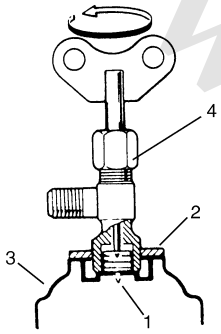

IYSQ01720015-01

   c) Purge any air existing in center charging hose. When using refrigerant container tap valve, use the following procedure to purge air.
      i) Once fully tighten refrigerant container tap valve and then loosen (open) plate nut slightly.
      ii) Open low pressure valve of manifold gauge set a little.
      iii) As soon as refrigerant comes out with a “hiss” (1) through a clearance between refrigerant container and tap valve, tighten plate nut as well as manifold gauge set low pressure valve.
      iv) Turn handle of tap valve clockwise so that its needle is screwed into the new container to make a hole for refrigerant flow.

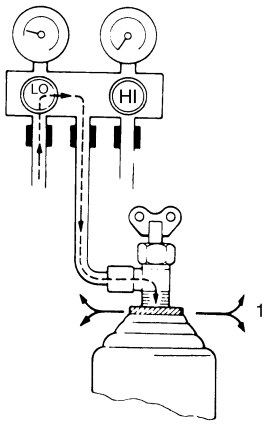

IYSQ01720016-01

8) After the system has been charged with specified amount (570 ± 30 g) of refrigerant or when low pressure gauge and high pressure gauge have indicated the following specified value, close low pressure side valve on manifold gauge set.

| Low side and high side pressure example | |
|---|---|
| Gauges should read as follows when ambient temperature is 30 °C (86 °F) | |
| Pressure on high pressure gauge | M16 engine model:<br>1150 – 1410 kPa<br>11.5 – 14.1 kg/cm$^2$<br>164 – 201 psi<br>J20 engine model:<br>1300 – 1630 kPa<br>13.0 – 16.3 kg/cm$^2$<br>185 – 232 psi |
| Pressure on low pressure gauge | M16 engine model:<br>280 – 410 kPa<br>2.8 – 4.1 kg/cm$^2$<br>40 – 58 psi<br>J20 engine model:<br>250 – 370 kPa<br>2.5 – 3.7 kg/cm$^2$<br>36 – 53 psi |

**Removal of Manifold Gauge Set**

**⚠ WARNING**

**High pressure side is under high pressure. Therefore, be careful not to get injured especially on your eyes and skin.**

For the A/C system charged with the specified amount of refrigerant, remove manifold gauge set as follows:

1) Close low pressure side valve of manifold gauge set. (The high pressure side valve is closed continuously during the process of charging.)
2) Close refrigerant container valve.
3) Stop engine.
4) Using shop rag, remove charging hoses from service valves. This operation must be performed quickly.
5) Put caps on service valves.

www.cargeek.ir

www.CarGeek.ir

**Check A/C System for Refrigerant Leaks**

Whenever a refrigerant leak is suspected in the system or any service operation has been performed which may result in malfunction lines and/or connections, it is advisable to check for leaks.
Common sense should be used in performing any refrigerant leak test, since the need and extent of any such test will, in general, depend upon the nature of a complaint and the type of a service performed on the system.

**Liquid leak detector**

**⚠ WARNING**

- **To prevent explosions or fires, make sure that there are no flammables in the vicinity.**
- **When exposed to fire, the refrigerant turns into a poisonous gas (phosgene). Do not inhale this gas.**

There are a number of fittings and places throughout the air conditioning system where a liquid leak detector solution may be used to pinpoint refrigerant leaks.
By merely applying the solution to the area in question with a swab, such as attached to the bubbles will form within seconds if there is a leak.
For confined areas, such as sections of the evaporator and condenser, an electronic (gas) leak detector (1) is more practical for determining leaks.

**Special tool**
**(A): 09990–86011**

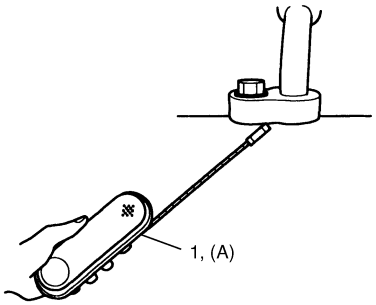


I5JB0A720035-01

## A/C Condenser Assembly On-Vehicle Inspection

S5JB0A7206002

**⚠ CAUTION**

**Be careful not to damage condenser fins. If condenser fin is bent, straighten it by using a screwdriver or pair of pliers. If any leakage is found from fitting or tube, repair or replace condenser.**

**NOTE**

**Clogged condenser fins should be washed with water, and should be dried with compressed air.**

Check the followings.

- Clog of condenser fins.
  If any clog is found, condenser fins should be washed with water and should be dried with compressed air.
- Condenser fins for leakage and breakage If any defects are found, repair or replace condenser.
- Condenser fittings for leakage. If any defects are found, repair or replace condenser.

## A/C Condenser Assembly Removal and Installation

S5JB0A7206003

**⚠ CAUTION**

**Do not damage condenser fins. If condenser fin is bent, straighten it by using flat head screwdriver or pair of pliers.**

**Removal**

1) Disconnect negative (–) cable at battery.
2) Recover refrigerant from A/C system referring to “Operation Procedure for Charging A/C with Refrigerant: ”.

**NOTE**

**The amount of removed compressor oil must be measured for replenishing compressor oil.**

www.cargeek.ir

www.CarGeek.ir


3) Remove front bumper assembly referring to “Front Bumper Components: in Section 9K”.
4) Remove front bumper upper member referring to “Front Bumper Components: in Section 9K”.
5) Disconnect compressor discharge hose (1) and liquid pipe (2) from condenser assembly (4).

**⚠ CAUTION**

**As soon as above hose and pipe are disconnected, cap opened fittings so that moisture and dust do not enter condenser.**

6) Remove condenser assembly mounting bolts (3), and then remove condenser assembly.

**NOTE**

**Be careful not to damage fins of condenser and radiator.**

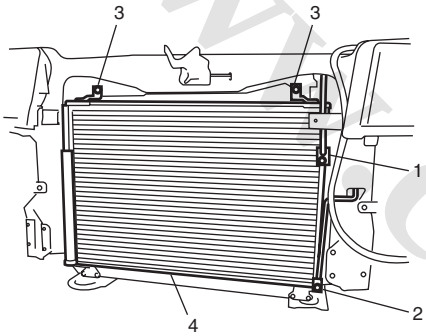

I5JB0A720036-02

**Installation**

Reverse removal sequence to install condenser, noting the following point.

- Replenish specified amount of compressor oil to compressor suction side referring to “Precautions on Replenishing Compressor Oil: ”.
- Evacuate and charge the A/C system referring to “Evacuation” and “Charge” in “Operation Procedure for Charging A/C with Refrigerant: ”.

## Desiccant Removal and Installation

S5JB0A7206007

**Removal**

1) Remove condenser assembly from vehicle referring to “A/C Condenser Assembly Removal and Installation: ”.
2) Remove circlip (4) using special tool.

**Special tool**
**: 09900–06107**

3) Remove the filter (1) from the receiver / dryer tank (2).
4) Remove desiccant (3).

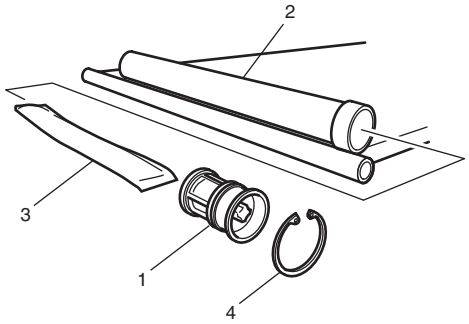

I5JB0A720037-02

**Installation**

Reverse removal sequence to install desiccant, according to instruction manual with supply parts.

**NOTE**

- **Replenish specified amount of compressor oil to compressor suction side referring to “Precautions on Replenishing Compressor Oil: ”.**
- **Install circlip (1) as shown in figure.**

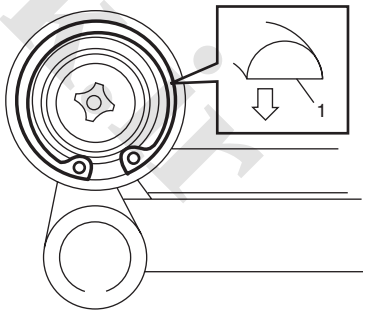

I5JB0A720038-01

www.cargeek.ir

www.CarGeek.ir

## HVAC Air Filter Removal and Installation

S5JB0A7206009

### Removal

1) Disconnect negative (–) cable at battery.
2) Remove glove box.
3) Remove filter cover (1).

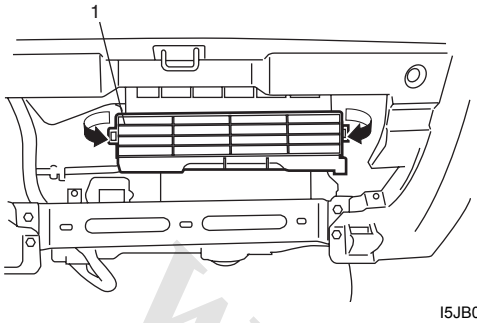


I5JB0A720039-01

4) Pull out filter element (1).

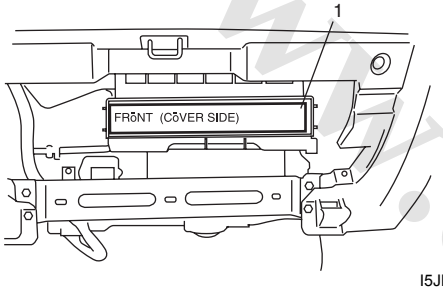


I5JB0A720040-02

### Installation

Reverse removal procedure for installation noting the followings:

- Install filter (1) into blower unit by paying attention to direction of arrow on filter.
- Enable air bag system after installation of filter. Refer to “Enabling Air Bag System: in Section 8B”.

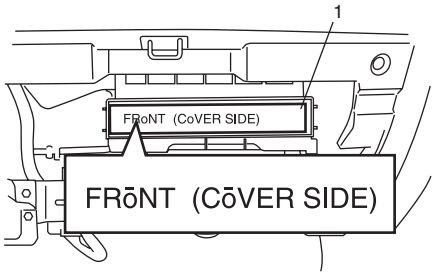


I5JB0A720041-02

## HVAC Air Filter Inspection

S5JB0A7206010

Check that filter is not excessively dirty, damage or oily, clean filter with compressed air from air outlet side of filter. If abnormality is found, replace filter with new one.

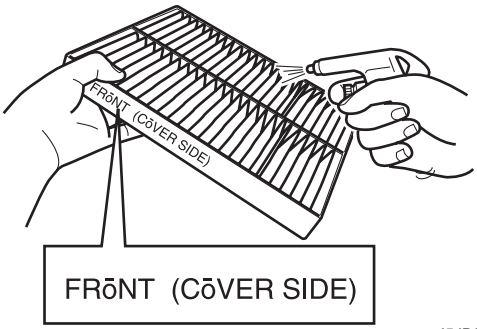


I5JB0A720092-01

www.cargeek.ir

www.CarGeek.ir


## HVAC Unit Components

S5JB0A7206011

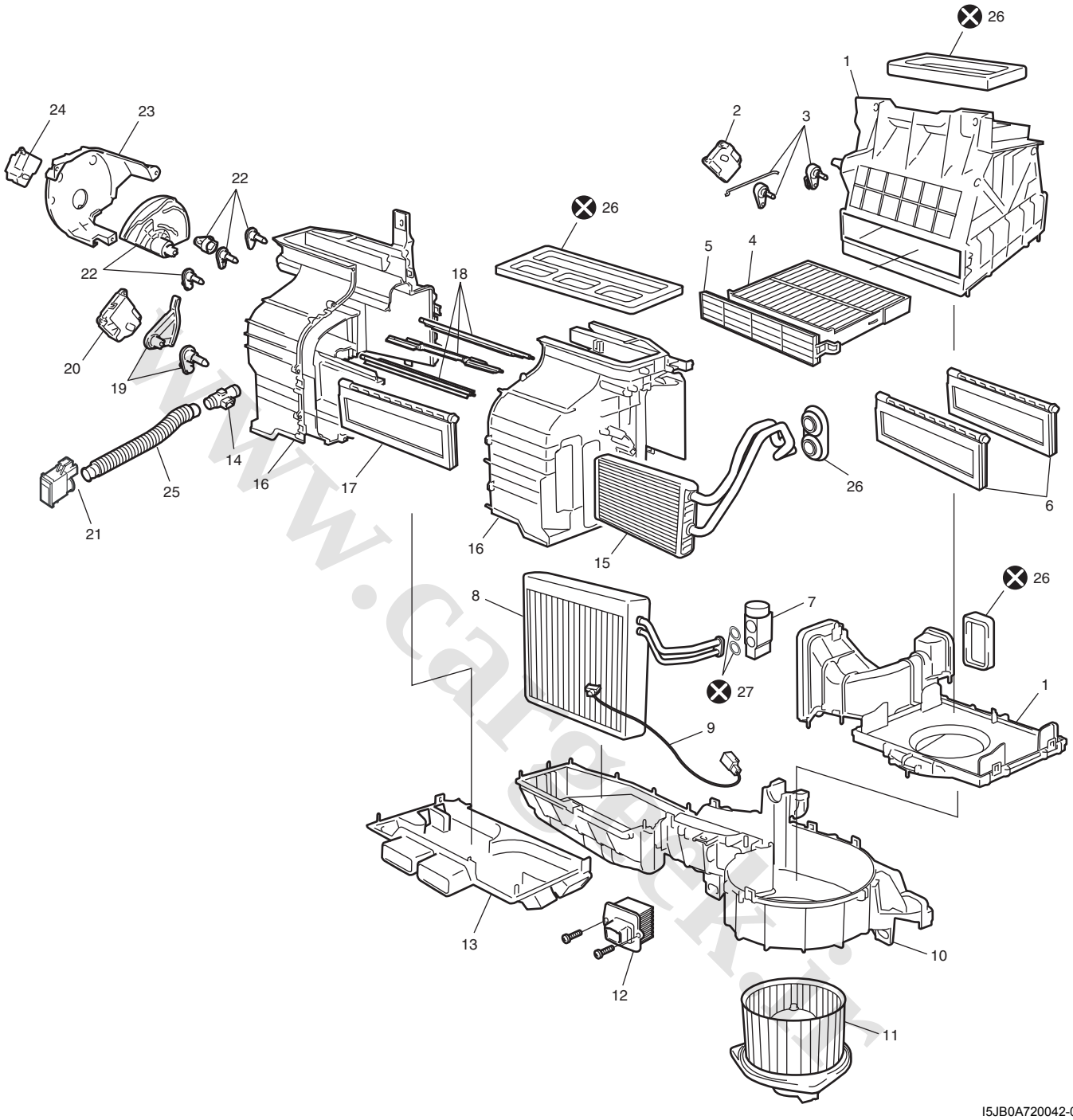


I5JB0A720042-03

| | | |
|---|---|---|
| 1. Blower upper case | 10. Blower lower case | 19. Temperature control links |
| 2. Air intake control actuator | 11. Blower motor | 20. Temperature control actuator |
| 3. Air intake control links | 12. Blower motor controller | 21. Inside air temperature sensor |
| 4. Air filter (if equipped) | 13. Foot duct | 22. Air flow control links |
| 5. Air filter cover | 14. Aspirator | 23. Air flow control links cover |
| 6. Air intake control door assembly | 15. Heater core | 24. Air flow control actuator |
| 7. Expansion valve | 16. Heater unit upper case | 25. Aspirator hose |
| 8. Evaporator | 17. Temperature control door assembly | 26. Packing |
| 9. Evaporator temperature sensor | 18. Air flow control door assembly | 27. O-ring |

www.cargeek.ir

 www.CarGeek.ir

**⚠ CAUTION**

**Be careful not to damage A/C evaporator fins. If A/C evaporator fin is bent, straighten it by using flat head screwdriver or pair of pliers.**

## HVAC Unit Removal and Installation

S5JB0A7206012

### Removal

**⚠ WARNING**

**Failure to follow the following procedure and WARNING may cause air bag deployment, personal injury, damage to parts, or air bag being unable to deploy.**

- **Never rest a steering column assembly on steering wheel with air bag (inflator) module face down and column vertical.**
- **When handling the air bag (inflator) modules (driver and passenger), be careful not to drop it or apply an impact to it. If an excessive impact was applied (e.g., dropped from a height of 91.4 cm (3 feet) or more, never attempt disassembly or repair but replace it with a new one.**
- **When grease, cleaning agent. Oil, water, etc. has got onto air bag (inflator) modules (driver and passenger), wipe off immediately with a dry cloth.**

1) Disconnect negative (–) cable at battery.
2) Disable air bag system referring to “Disabling Air Bag System: in Section 8B”.
3) Recover refrigerant from A/C system using recovery and recycling equipment referring to “Recovery” in “Operation Procedure for Charging A/C with Refrigerant: ”.
4) Drain engine coolant and disconnect heater hoses (1) from HVAC unit.
5) Disconnect suction hose (2) and condenser outlet hose (3) by removing attaching bolt (4).

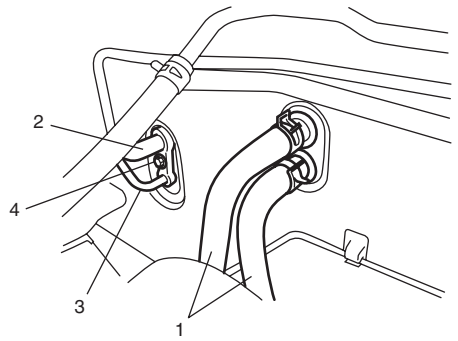


I5JB0A720043-01

6) Remove instrument panel referring to “Instrument Panel Removal and Installation: in Section 9C”.
7) Disconnect rear duct from HVAC unit.
8) Detach wiring, connectors and clamps from HVAC unit.
9) Remove HVAC unit (1).

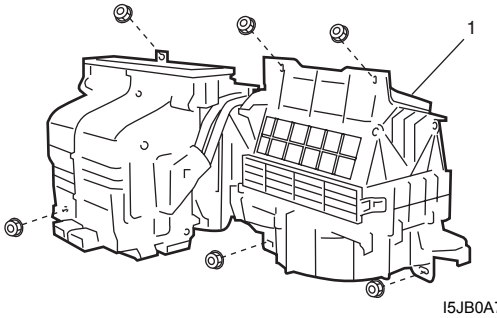


I5JB0A720044-01

### Installation

1) Install HVAC unit by reversing removal procedure, noting the following items.
   - When installing each part, be careful not to catch any wiring harness.
   - Replenish specified amount of compressor oil to compressor suction side referring to “Precautions on Replenishing Compressor Oil: ”.
   - Install the padding (1) to the installation hole uniformly.
   - Fill engine coolant to radiator.
   - Enable air bag system referring to “Enabling Air Bag System: in Section 8B”.
   - Evacuate and charge system. Refer to “Operation Procedure for Charging A/C with Refrigerant: ”.

www.cargeek.ir

www.CarGeek.ir


## A/C Evaporator Removal and Installation

S5JB0A7206013

### Removal

1) Remove HVAC unit referring to “HVAC Unit Removal and Installation: ”.
2) Remove evaporator (1) from HVAC unit by disassembling HVAC unit.

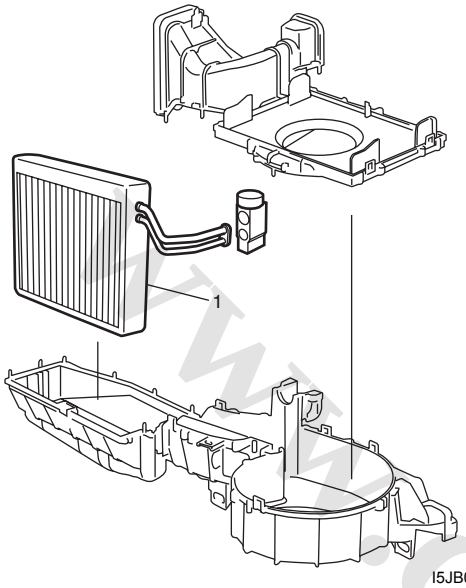


I5JB0A720045-02

### Installation

Reverse removal procedure to install A/C evaporator nothing the following instructions.

## A/C Evaporator Inspection

S5JB0A7206014

1) Check evaporator fins for blockage. If found clogged, use compressed air to clean the fins.

**⚠ CAUTION**

- **Do not use water for cleaning of evaporator.**
- **Be careful not to damage evaporator fins. If evaporator fin is bent, straighten it by using a screwdriver or pair of pliers. If any leakage is found from fitting or tube, repair or replace evaporator.**

2) Check inlet and outlet fittings for crack or scratch. Repair them as required.

## A/C Evaporator Temperature Sensor Removal and Installation

S5JB0A7206015

### Removal

1) Remove A/C evaporator (1) referring to “A/C Evaporator Removal and Installation: ”.
2) Remove A/C evaporator temperature sensor (2) from evaporator.

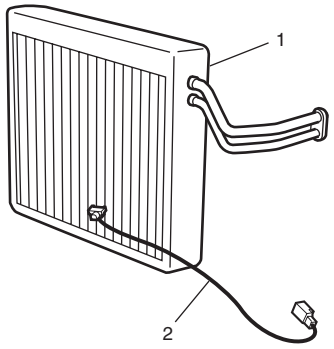


I5JB0A720046-01

### Installation

## A/C Evaporator Temperature Sensor Inspection

S5JB0A7206016

Check resistance between A/C evaporator temperature sensor terminals. If check result is not in specification, replace A/C evaporator temperature sensor with the new one.

**A/C evaporator temperature sensor resistance**
**11.2 – 11.5 kΩ at 0 °C (32 °F)**
**3.8 – 3.9 kΩ at 25 °C (77 °F)**

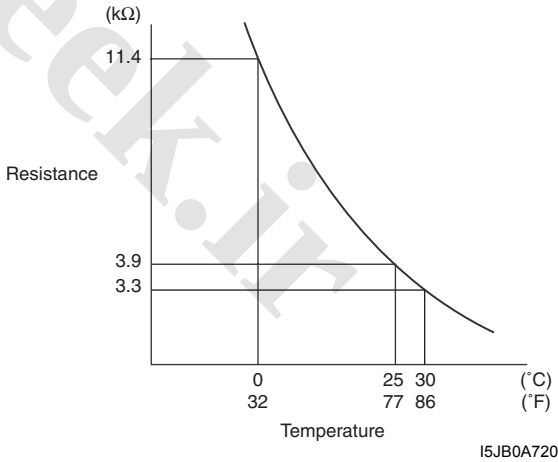


I5JB0A720090-03

www.cargeek.ir

 www.CarGeek.ir

Reverse the removal procedure nothing the following instruction.

- Install evaporator temperature sensor (1) onto evaporator (2) as shown.

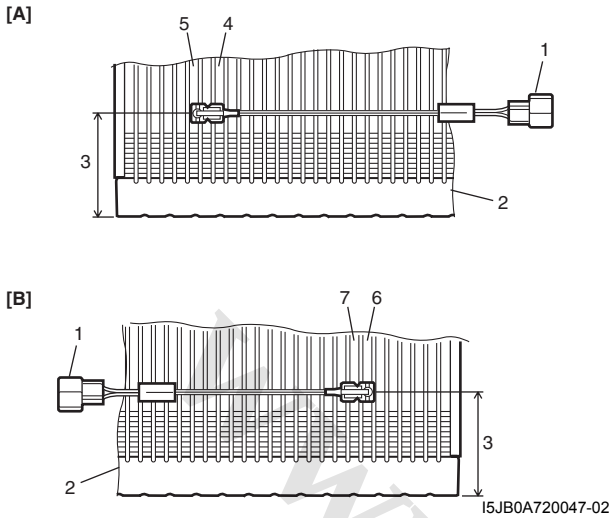


I5JB0A720047-02

| | |
|---|---|
| [A]: | LH steering vehicle |
| [B]: | RH steering vehicle |
| 1. | Evaporator temperature sensor |
| 2. | Evaporator |
| 3. | 34.5 mm (1.36 in.) |
| 4. | Sensor part fixed to 8th fin from the left-side |
| 5. | Holding part fixed to 6th fin from the left-side |
| 6. | Holding part fixed to 7th fin from the right-side |
| 7. | Sensor part fixed to 8th fin from the right-side |

## Expansion Valve On-Vehicle Inspection

S5JB0A7206018

Refer to “A/C System Performance Inspection: ”.

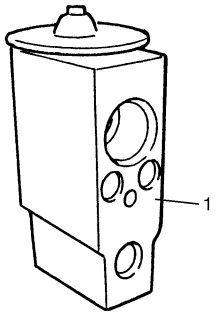


IYSQ01720049-01

| | |
|---|---|
| 1. | Expansion valve |

## Expansion Valve Removal and Installation

S5JB0A7206017

### Removal

1) Recover refrigerant from the A/C system with recovery and recycling equipment referring to “Recovery” in “Operation Procedure for Charging A/C with Refrigerant: ”.
2) Loosen a bolt (1) and remove pipes from expansion valve (2).
3) Loosen bolts (3) and remove expansion valve.

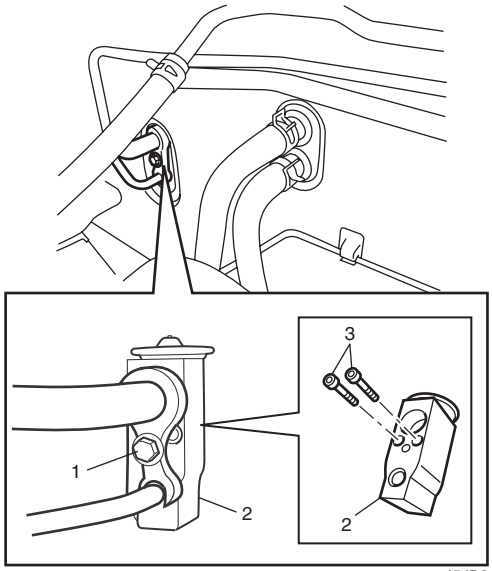


I5JB0A720048-02

### Installation

1) Reverse removal nothing the following instructions.
   - Apply compressor oil to O-ring of expansion valve and pipes.
2) Evacuate and charge system according to “Operation Procedure for Charging A/C with Refrigerant: ”.

## A/C Refrigerant Pressure Sensor and Its Circuit Inspection

S5JB0A7206051

1) Disconnect A/C refrigerant pressure sensor connector.
2) Turn ignition switch to ON position.
3) Check if voltage between “GRY/RED” wire terminal and “GRY/GRN” wire terminal of A/C refrigerant pressure sensor connector is 4.75 V to 5.25 V.
   If not, check A/C refrigerant pressure sensor circuit.
4) Connect A/C refrigerant pressure sensor connector with ignition switch turned OFF.
5) Connect manifold gauge set to the charging valves.
6) Check A/C refrigerant pressure sensor voltage of ECM connector referring to “A/C System Inspection at ECM: ”.
   If voltage is not as specified below, replace A/C refrigerant pressure sensor.

**A/C refrigerant pressure sensor voltage specifications (A/C refrigerant pressure measured by manifold gauge)**

**0.8 MPa (8.0 kg/cm$^2$, 116 psi): Approx. 1.46 – 1.71 V**
**1.4 MPa (14 kg/cm$^2$, 203 psi): Approx. 2.28 – 2.53 V**
**1.6 MPa (16 kg/cm$^2$, 232 psi): Approx. 2.55 – 2.80 V**
**1.8 MPa (18 kg/cm$^2$, 261 psi): Approx. 2.82 – 3.03 V**

www.cargeek.ir

www.CarGeek.ir


## A/C Refrigerant Pressure Sensor Removal and Installation

S5JB0A7206050

### Removal

1) Recover refrigerant from the A/C system with the recovery and recycling equipment referring to “Recovery” in “Operation Procedure for Charging A/C with Refrigerant: ”.
2) Disconnect negative (–) cable from battery.
3) Disconnect A/C refrigerant pressure sensor connector.
4) Remove A/C refrigerant pressure sensor (1) from liquid pipe (2).

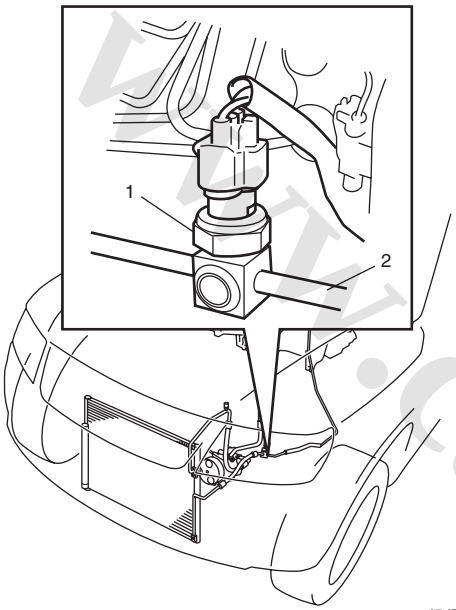


I5JB0A720049-02

### Installation

Reverse removal procedure noting the following instructions.

- Apply compressor oil to O-ring of A/C refrigerant pressure sensor.
- Tighten A/C refrigerant pressure sensor (1) to specified torque.

**Tightening torque**
**A/C refrigerant pressure sensor (a): 11 N·m (1.1 kgf-m, 8.0 lb-ft)**

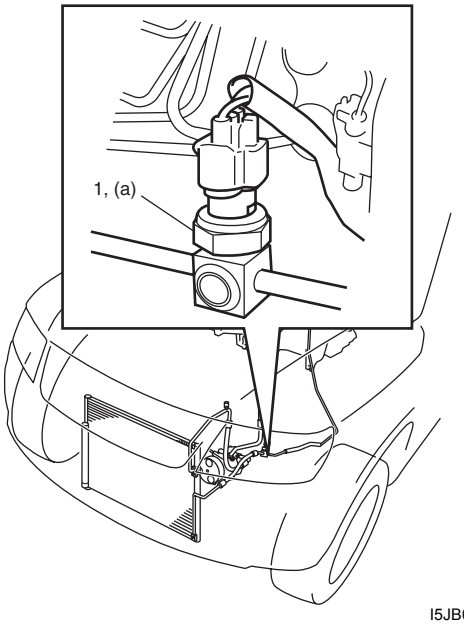


I5JB0A720050-02

- Evacuate and charge the A/C system referring to “Evacuation” and “Charge” in “Operation Procedure for Charging A/C with Refrigerant: ”.

## Sunload Sensor Removal and Installation

S5JB0A7206052

### Removal

1) Disconnect negative (–) cable at battery.
2) Detach sunload sensor (1) located on the driver side of the dashboard (3). Be careful not to damage the sensor and dashboard by using rag (2).

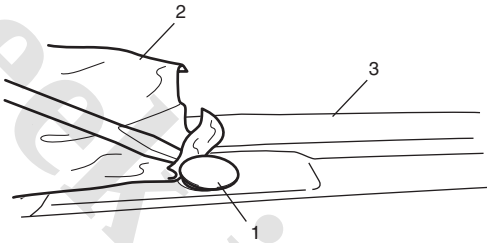


I5JB0A720051-01

3) Disconnect connector (1) from sunload sensor (2).

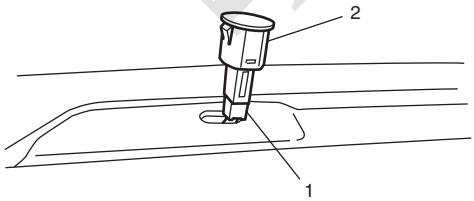


I5JB0A720052-01

### Installation

Reverse removal procedure.

www.cargeek.ir

www.CarGeek.ir

## Sunload Sensor Inspection

S5JB0A7206053

1) Remove sunload sensor. Refer to “Sunload Sensor Removal and Installation: ”.
2) Light over the sensor vertically with an incandescent lamp of approximately 100 watt.
3) The distance between the sensor and the lamp should be approximately 100 mm (3.94 in.).
4) Measure the voltage between the terminals with the (+) probe on the terminal “a” and the (–) probe on the terminal “b”.
5) Make sure if the voltage is approximately 0.38 – 0.42 V. If not, replace the sensor with the new one.

**Sunload sensor specifications**
**“a” – “b”: Approx. 0.38 – 0.42 V**

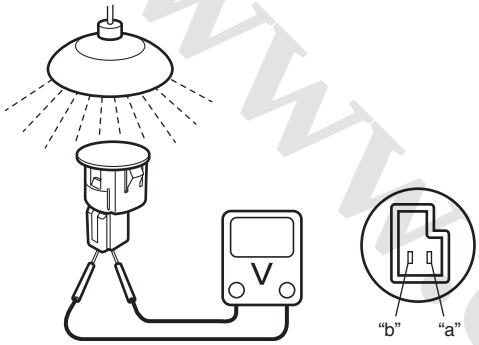

I5JB0A720053-01

## Inside Air Temperature Sensor Removal and Installation

S5JB0A7206054

### Removal

1) Disconnect negative cable (–) at battery.
2) Remove steering column hole cover.
3) Disconnect inside air temperature sensor connector (1) and aspirator hose (2).
4) Remove inside air temperature sensor (3) from vehicle.

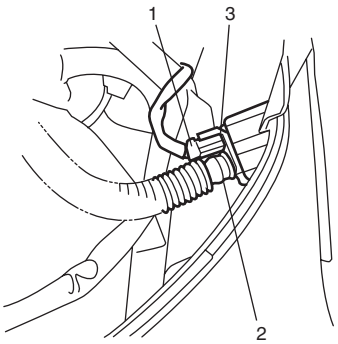

I5JB0A720054-01

### Installation

Reverse removal procedure.

## Inside Air Temperature Sensor Inspection

S5JB0A7206055

1) Remove Inside air temperature sensor referring to “Inside Air Temperature Sensor Removal and Installation: ”.
2) Check resistance between terminals.

**Inside air temperature sensor resistance**
**Approx. 1.7 kΩ ± 85 Ω at 25 °C (77 °F)**

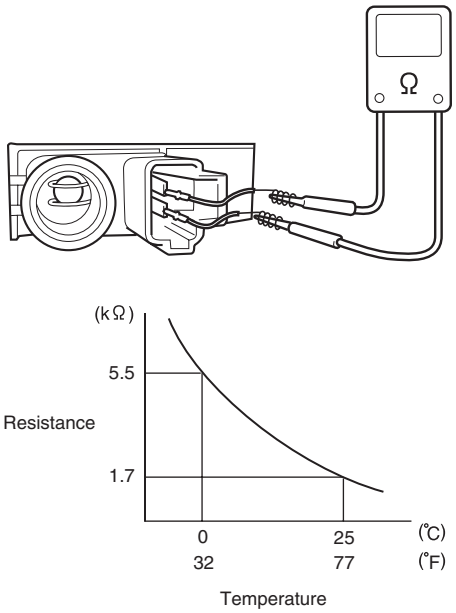

I5JB0A720055-01

## Outside Air Temperature Sensor Removal and Installation

S5JB0A7206056

Refer to “Outside Air Temperature Sensor Removal and Installation (If Equipped): in Section 9C”.

## Outside Air Temperature Sensor Inspection

S5JB0A7206057

Refer to “Outside Air Temperature Sensor Inspection (If Equipped): in Section 9C”.

## Air Flow Control Actuator Removal and Installation

S5JB0A7206058

Refer to “Air Flow Control Actuator Removal and Installation: in Section 7A”.

## Air Flow Control Actuator Inspection

S5JB0A7206059

Refer to “Air Flow Control Actuator Inspection: in Section 7A”.

www.cargeek.ir

www.CarGeek.ir


## Air Intake Control Actuator Removal and Installation

S5JB0A7206060

Refer to “Air Intake Control Actuator Removal and Installation: in Section 7A”.

## Air Intake Control Actuator Inspection

S5JB0A7206061

Refer to “Air Intake Control Actuator Inspection: in Section 7A”.

## Temperature Control Actuator Removal and Installation

S5JB0A7206062

Refer to “Temperature Control Actuator Removal and Installation: in Section 7A”.

## Temperature Control Actuator Inspection

S5JB0A7206063

Refer to “Temperature Control Actuator Inspection: in Section 7A”.

## HVAC Control Module Removal and Installation

S5JB0A7206023

Refer to “HVAC Control Module Removal and Installation: in Section 7A”.

## A/C Compressor Drive Belt Inspection and Adjustment

S5JB0A7206039

For M16 engine model referring to “P/S Pump and A/C Compressor (If Equipped) Drive Belt Inspection and Adjustment for M16 Engine Model: in Section 6C”.
For J20 engine model referring to “Water Pump and Generator Drive Belt On-Vehicle Inspection (For J20 Engine): in Section 1J”.

## A/C Compressor Drive Belt Removal and Installation

S5JB0A7206064

For M16 engine model referring to “P/S Pump and A/C Compressor (If Equipped) Drive Belt Removal and Installation for M16 Engine Model: in Section 6C”.
For J20 engine model referring to “Water Pump and Generator Drive Belt Removal and Installation (For J20 Engine): in Section 1J”.

## A/C Compressor Relay Inspection

S5JB0A7206040

### For M16 Engine Model

1) Disconnect negative (–) cable at battery.
2) Remove compressor relay (1) from vehicle.
3) Check that there is no continuity between terminal “c” and “d”. If there is continuity, replace relay.
4) Connect battery positive (+) terminal to terminal “b” of relay.
   Connect battery negative (–) terminal to terminal “a” of relay.
   Check continuity between terminal “c” and “d”.
   If there is no continuity when relay is connected to the battery, replace relay.

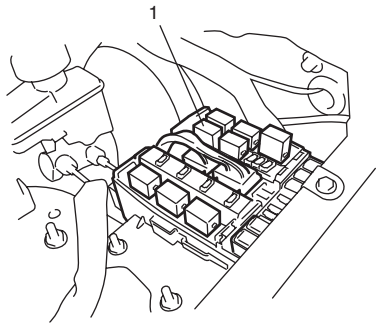


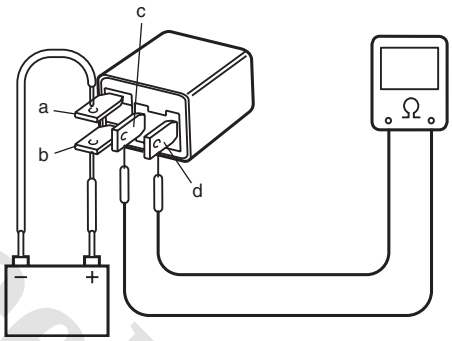


I5JB0A720056-01

### For J20 Engine Model

1) Disconnect negative cable at battery.
2) Remove included in integration relay No.2 (1) from vehicle.

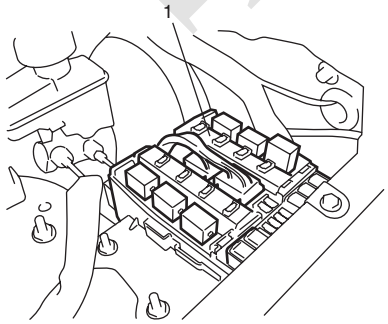


I5JB0A720057-01

www.cargeek.ir

 www.CarGeek.ir

3) Check that there is no continuity between terminals “C” and “D”.
   If there is continuity, replace integration relay No.2 (1).
4) Connect battery positive (+) terminal to terminal “B” of relay. Connect battery negative (–) terminal to terminal “A” of relay. Check for continuity between terminal “C” and “D”. If there is no continuity when relay is connected to the battery, replace integration relay No.2 (1).

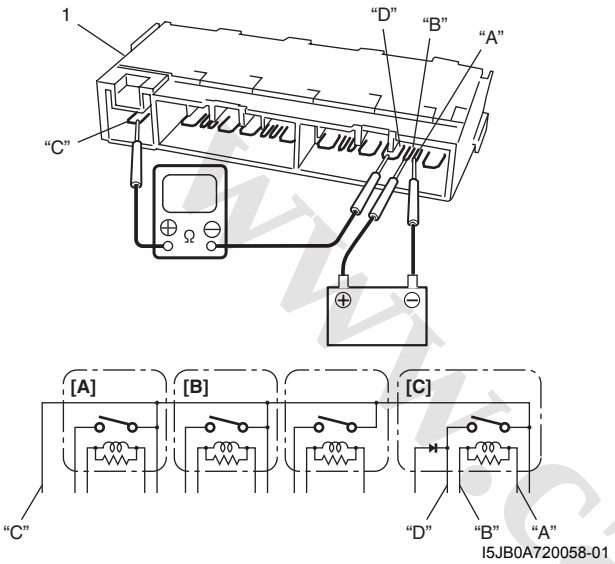


| | |
|---|---|
| [A]: | A/T relay |
| [B]: | HO2S heater relay |
| [C]: | Compressor relay |

## Compressor Assembly On-Vehicle Inspection

S5JB0A7206041

1) Install manifold gauge set (1) as shown in the figure.
2) Close Hi (4) and Lo (5) side valves.

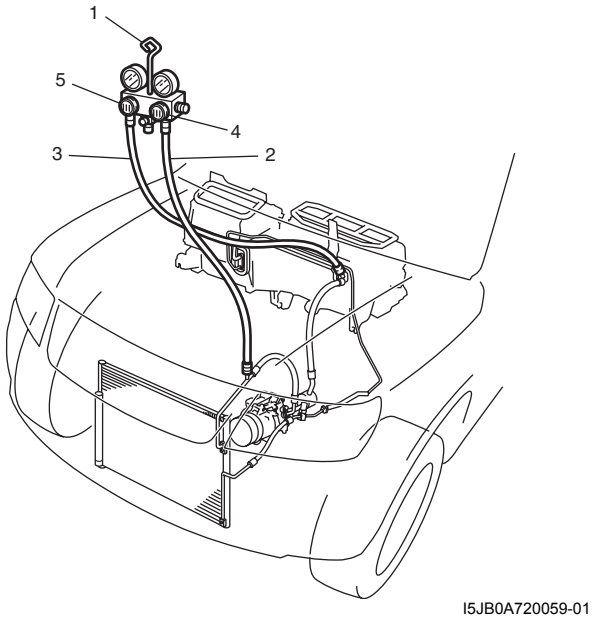


| | |
|---|---|
| 2. | High pressure side (Delivery side hose) |
| 3. | Low pressure side (Suction side pipe) |

3) Run engine at fast idle.
4) Check compressor for the following items.
   If any of the checks indicated a defect, repair compressor.
   - High pressure gauge reading is not low and low pressure gauge reading is not higher than normal.
   - Metallic sound
   - Leakage from compressor

## Compressor Assembly Removal and Installation for M16 Engine Model

S5JB0A7206042

### Removal

1) Run engine at idle with A/C ON for 10 minutes.
2) Disconnect negative (–) cable at battery.
3) Recover refrigerant from the A/C system using recovery and recycling equipment referring to “Recovery” in “Operation Procedure for Charging A/C with Refrigerant: ”.

**NOTE**

**The amount of compressor at removed must be measured and the same amount must be poured when installing the compressor.**

4) Disconnect thermal protector lead wire.
5) Disconnect suction and discharge hoses from compressor.

**NOTE**

**Cap open fitting immediately to keep moisture out of system.**

6) Remove compressor drive belt referring to “P/S Pump and A/C Compressor (If Equipped) Drive Belt Removal and Installation for M16 Engine Model: in Section 6C”.
7) Remove compressor with clutch assembly from its mount.

**NOTE**

**If compressor assembly is replaced with one, drain oil from compressor. Then, measure its amount.**

www.cargeek.ir

www.CarGeek.ir


**Installation**

Reverse removal procedure noting the following instructions.

- If compressor is replaced, pour new compressor oil referring to “Precautions on Replenishing Compressor Oil: ”.
- Evacuate and charge the A/C system referring to “Evacuation” and “Charge” in “Operation Procedure for Charging A/C with Refrigerant: ”.
- Adjust drive belt tension referring to “P/S Pump and A/C Compressor (If Equipped) Drive Belt Inspection and Adjustment for M16 Engine Model:  in Section 6C”.

**Tightening torque**
**Compressor mounting bolt for M16 engine model:  25 N·m (2.5 kgf-m, 18.0 lb-ft)**

## Compressor Assembly Removal and Installation for J20 Engine Model

S5JB0A7206043

**Removal**

1) Run engine at idle with A/C ON for 10 minutes.
2) Disconnect negative (–) cable at battery.
3) Recover refrigerant from the A/C system using recovery and recycling equipment referring to “Recovery” in “Operation Procedure for Charging A/C with Refrigerant: ”.

**NOTE**

**The amount of compressor oil at removed must be measured and the same amount must be poured when installing the compressor.**

4) Drain engine coolant.
5) Remove radiator inside hose and outside hose from vehicle.
6) Disconnect magnet clutch connector.
7) Disconnect suction hose and discharge hose from compressor.

**NOTE**

**Cap open fitting immediately to keep moisture out of system.**

8) Remove compressor from its mount.

**NOTE**

**If compressor assembly is replaced with one, drain oil from compressor. Then, measure its amount.**

**Installation**

**⚠ CAUTION**

**Be sure to use HFC-134a (R-134a) compressor oil.**

Reverse removal procedure noting the following instructions.

- If compressor is replaced, pour new compressor oil referring to “Precautions on Replenishing Compressor Oil: ”.
- Fill engine coolant to radiator.
- Evacuate and charge system referring to “Evacuation” and “Charge” in “Operation Procedure for Charging A/C with Refrigerant: ”.
- Install drive belt referring to “Water Pump and Generator Drive Belt Removal and Installation (For J20 Engine):  in Section 1J”.

**Tightening torque**
**Compressor mounting bolt for J20 engine model:  25 N·m (2.5 kgf-m, 18.0 lb-ft)**

www.cargeek.ir

 www.CarGeek.ir

## Magnet Clutch Components for M16 Engine Model

S5JB0A7206044

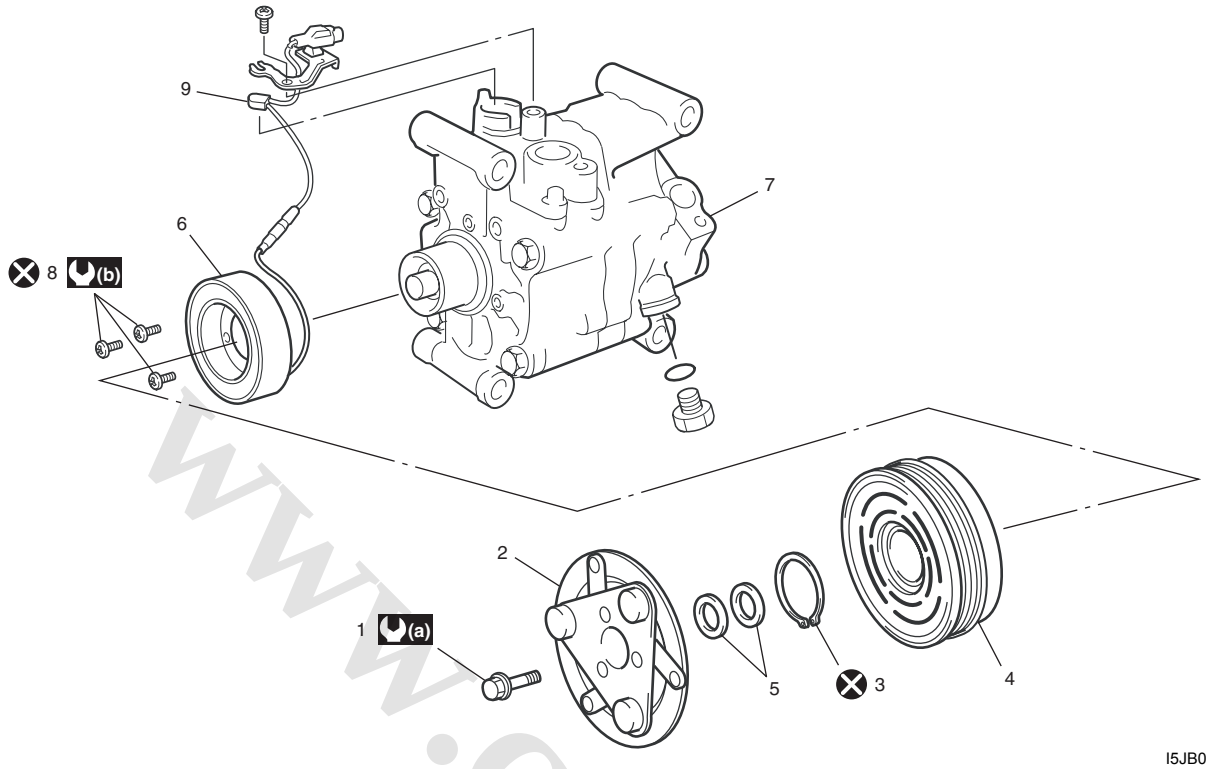


I5JB0A720060-01

| | | |
|---|---|---|
| 1. Armature plate bolt | 5. Shim(s) | 9. Thermal switch |
| 2. Armature plate | 6. Magnet clutch coil | (a) : 15 N·m (1.5 kgf-m, 11.0 lb-ft) |
| 3. Circlip | 7. Compressor body assembly | (b) : 4.9 N·m (0.49 kgf-m, 4.0 lb-ft) |
| 4. Magnet clutch | 8. Magnet clutch coil bolt | : Do not reuse. |

www.cargeek.ir

www.CarGeek.ir


## Magnet Clutch Components for J20 Engine Model

S5JB0A7206045

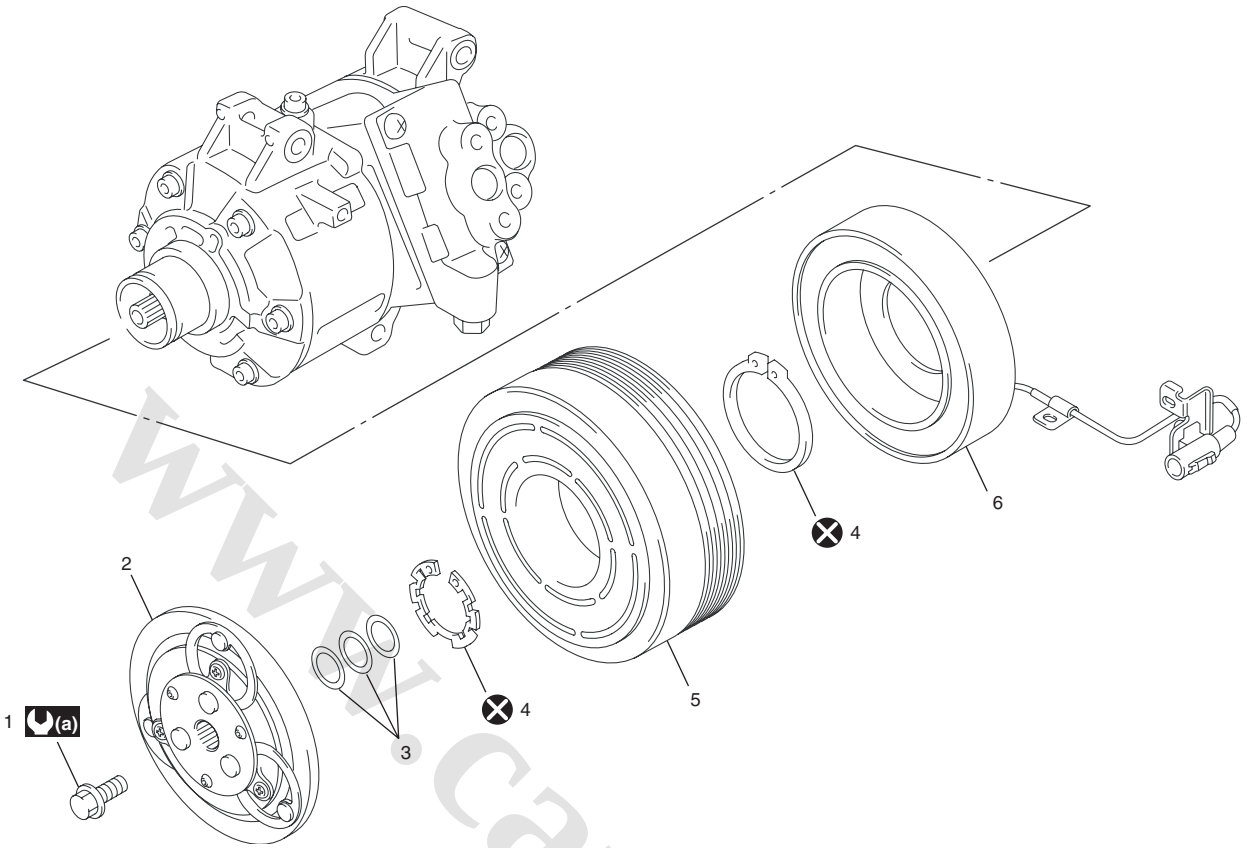


I5JB0A720061-01

| | | | |
|---|---|---|---|
| 1. Armature plate bolt | 3. Shim(s) | 5. Magnet clutch pulley | (a) : 20 N·m (2.0 kgf-m, 14.5 lb-ft) |
| 2. Armature plate | 4. Circlip | 6. Magnet clutch coil | ⊗ : Do not reuse. |

## Magnet Clutch Operating Check for M16 Engine Model

S5JB0A7206046

Check the following items.

- Inspect armature plate and rotor for signs of oil.
- Check clutch bearings for noise and grease leakage.
- Using an ohmmeter (3), measure resistance of stator coil between clutch lead wire (1) and body ground (2). If measured resistance is not within tolerance, replace coil.

**<u>Standard resistance for magnet clutch</u>**
**Approx. 2.9 – 3.2 Ω at 20 °C (68 °F)**

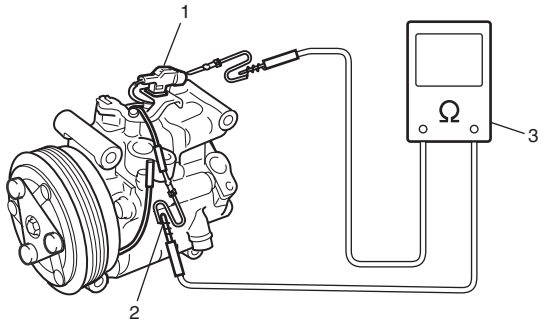


I5JB0A720062-01

## Magnet Clutch Operating Check for J20 Engine Model

S5JB0A7206047

Check the following items.
If any detects are found, repair or replace magnet clutch assembly.

- Inspect armature plate and rotor for signs of oil.
- Check clutch bearings for noise and grease leakage.
- Using an ohmmeter (3), measure resistance of stator coil between clutch lead wire (1) and body ground (2). If measured resistance is not within tolerance, replace coil.

**<u>Specified current of magnet clutch</u>**
**Approx. 3.8 – 6.0 Ω at 25 °C (77 °F)**

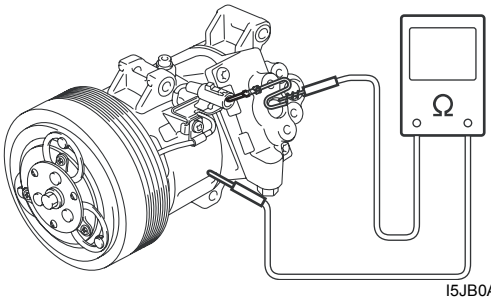


I5JB0A720063-01

www.cargeek.ir

www.CarGeek.ir

## Magnet Clutch Removal and Installation for M16 Engine Model

S5JB0A7206048

### Removal

1) Remove compressor from vehicle. Refer to “Compressor Assembly Removal and Installation for M16 Engine Model: ”.
2) Fix armature plate (1) with special tool (A) and remove armature plate bolt (2).

**Special tool**
**(A): 09991–06310**

**NOTE**

**Do not reuse armature plate bolt.**

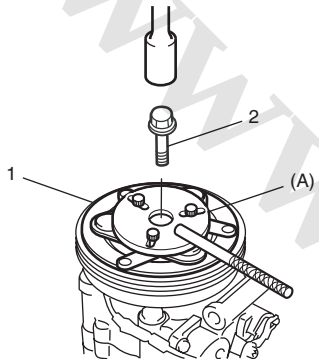


I5JB0A720064-02

3) Remove armature plate.
4) Remove shims from shaft.
5) Using special tool (A), remove circlip (1).

**Special tool**
**(A): 09900–06107**

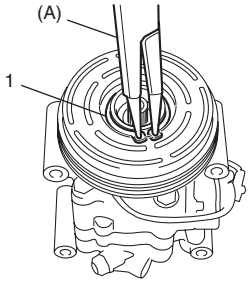


I5JB0A720065-01

6) Remove magnet clutch lead wire clamp screw, and remove magnet clutch read wire ground terminal.
7) Remove magnet clutch pulley with puller (1).

**NOTE**

**Be careful not to damage pulley when tapping magnet clutch.**

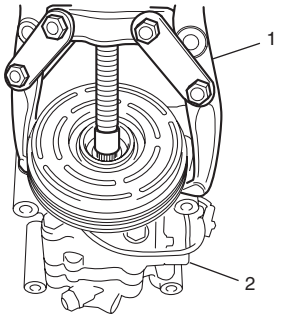


I5JB0A720066-01

| |
|---|
| 2. Compressor |

8) Remove magnet clutch bolts, and then remove magnet clutch coil.

**NOTE**

**Do not reuse magnet clutch bolts.**

### Installation

1) Install magnet clutch coil (2), and then tighten new magnet clutch coil bolts (1) as specified torque.

**Tightening torque**
**Magnet clutch coil bolt (a): 4.9 N·m (0.49 kgf-m, 4.0 lb-ft)**

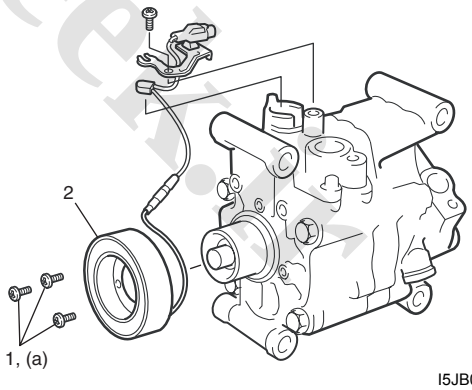


I5JB0A720067-02

2) Install clamp portion and ground terminal of lead wire.

www.cargeek.ir

www.CarGeek.ir


3) Install magnet clutch pulley (1).
   a) Set magnet clutch squarely over clutch installation boss.
   b) Place special tool (A) onto clutch bearing. Ensure that edge rests only on inner race of bearing.

      **Special tool**
      **(A): 09951–15510**

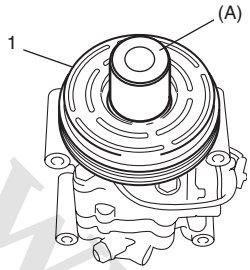

I5JB0A720068-02

   c) Install snap ring (1) using special tool (B).

      **Special tool**
      **(B): 09900–06107**

**⚠ CAUTION**

**Be careful not to scratch bearing seal.**

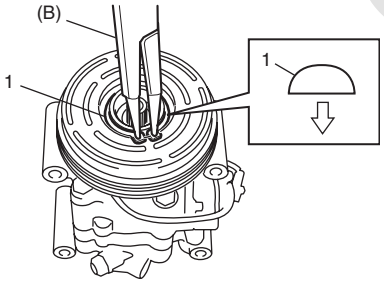

I5JB0A720087-02

4) Inspect clearance between armature plate (1) and magnet clutch pulley as follows.
   a) Put compressor in a vise (2).
   b) Set dial gauge (3) on armature plate, and then adjust its pointer at 0.
   c) Connect battery positive terminal (+) to magnet clutch coil lead wire.
   d) Connect battery negative terminal (–) to compressor body assembly. (At this point, armature plate and magnet clutch pulley are kept in contact.)
   e) Disconnect battery negative terminal (–) to compressor body assembly. (At this point, armature plate and magnet clutch pulley are not in contact.)
   f) Read stroke of armature plate from dial gauge by performing Step d) and e) repeatedly. (Stroke of armature plate is clearance between armature plate and magnet clutch pulley.)
      If clearance is out of specification, adjust clearance by changing number and/or thickness of shim(s).

**Standard clearance between armature plate and magnet clutch**
**"a": 0.3 – 0.5 mm (0.012 – 0.020 in.)**

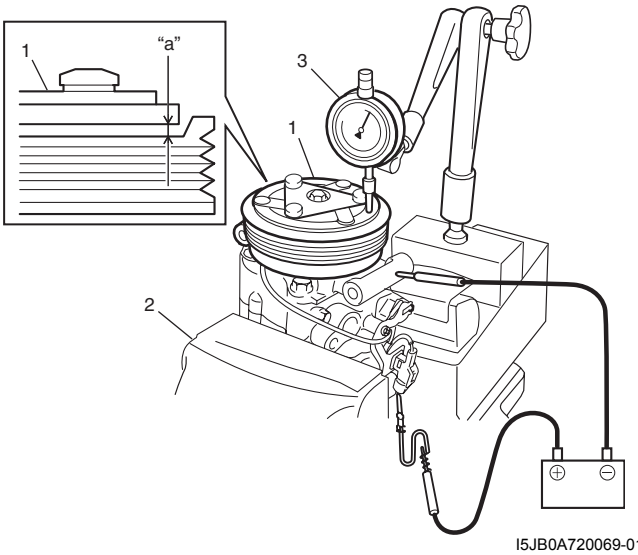

I5JB0A720069-01

5) Tighten new armature plate bolt (1) as specified torque.

   **Tightening torque**
   **Armature plate bolt (a): 15 N·m (1.5 kgf-m, 11.0 lb-ft)**

   **Special tool**
   **(A): 09991–06310**

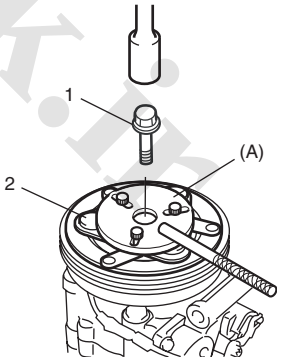

I5JB0A720070-02

| |
|---|
| 2. Armature plate |

www.cargeek.ir

www.CarGeek.ir

## Magnet Clutch Removal and Installation for J20 Engine Model

S5JB0A7206049

### Removal

1) Remove compressor from vehicle referring to “Compressor Assembly Removal and Installation for J20 Engine Model: ”.
2) Fix armature plate (1) with special tool (A) and remove armature plate bolt.

**Special tool**
**(A): 09991–06310**

**NOTE**

**Do not reuse armature plate bolt.**

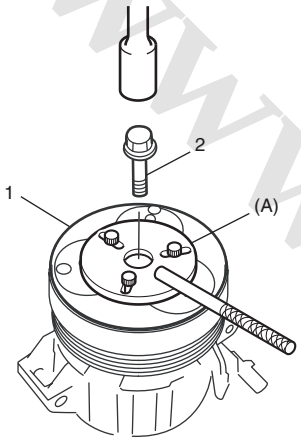


I5JB0A720071-01

3) Remove armature plate.
4) Remove shim(s) from shaft.
5) Using special tool (A), remove snap ring (1).

**Special tool**
**(A): 09900–06107**

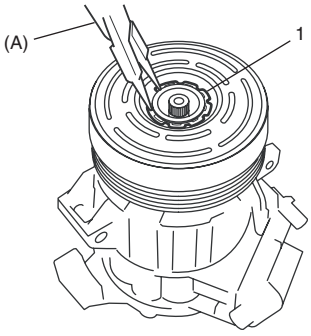


I5JB0A720072-01

6) Remove magnet clutch pulley (1) with puller (2).

**NOTE**

**Be careful not to damage pulley.**

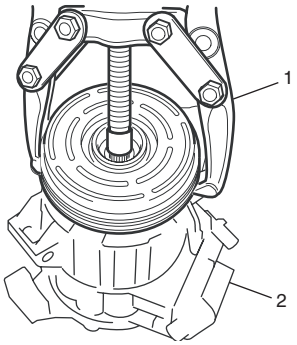


I5JB0A720073-01

7) Remove snap ring (1) using special tool (B), and then remove magnet clutch coil (1).

**Special tool**
**(A): 09900–06107**

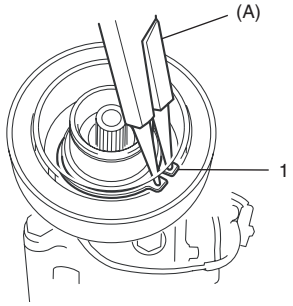


I5JB0A720074-02

### Installation

1) Install magnet clutch coil (3).

**NOTE**

**Protrusion (1) on underside of magnet clutch coil and hole (2) on compressor body assembly must match to stop movement of magnet clutch coil and to locate lead wire correctly.**

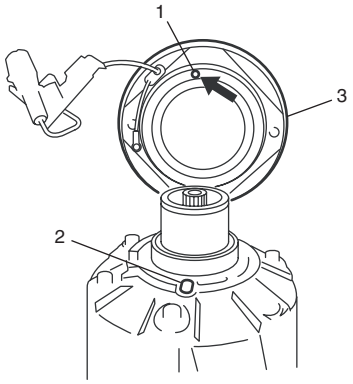


I5JB0A720075-01

www.cargeek.ir

www.CarGeek.ir


2) Install new snap ring (1) using special tool (A).

**Special tool**
**(B): 09900–06107**

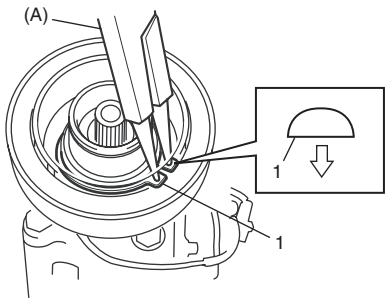

I5JB0A720088-04

3) Install magnet clutch pulley.
   a) Set magnet clutch horizontally over clutch installation boss.
   b) Place special tool (B) onto magnet clutch bearing. Ensure that edge rests only inner rase of bearing.

   **Special tool**
   **(B): 09951–15510**

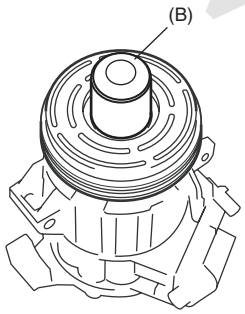

I5JB0A720076-02

   c) Install new snap ring (1) using special tool (A).

   **Special tool**
   **(A): 09900–06107**

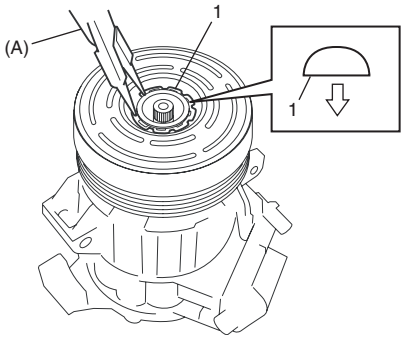

I5JB0A720077-01

4) Install armature plate (1).
5) Using special tool (A), tighten new armature plate bolt (2) to specified torque.

**Tightening torque**
**Armature plate bolt (a): 21 N·m (2.1 kgf-m, 15.5 lb-ft)**

**Special tool**
**(A): 09991–06310**

6) Adjust clearance between armature plate (1) and magnet clutch pulley by putting shim(s) on compressor shaft. To measure the clearance, perform the following steps.
   a) Put compressor in a vise.
   b) Set dial gauge on magnet clutch plate, and then adjust its pointer at 0.
   c) Connect battery positive terminal (+) to magnet clutch coil lead wire.
   d) Connect battery negative terminal (–) to compressor body assembly. (At this point, armature plate and magnet clutch pulley (2) are kept in contact.)
   e) Disconnect battery negative terminal (–) to compressor body assembly. (At this point, armature plate and magnet clutch pulley (2) are not in contact.)
   f) Read stroke of armature plate from dial gauge by performing Step d) and e) repeatedly. (Stroke of armature plate is clearance between armature plate and magnet clutch pulley (2).)

**Standard clearance between armature plate and magnet clutch**
**“a”: 0.3 – 0.6 mm (0.012 – 0.024 in.)**

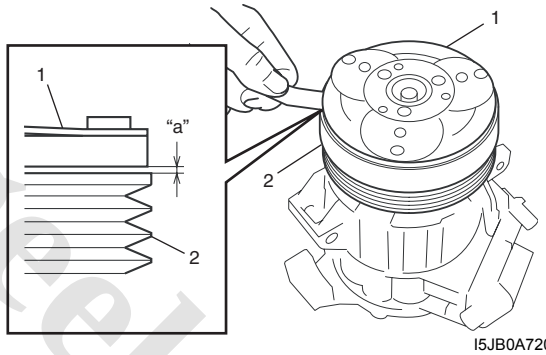

I5JB0A720078-02

7) Install compressor to vehicle referring to “Compressor Assembly Removal and Installation for J20 Engine Model: ”.

## Thermal Switch On-Vehicle Inspection for M16 Engine Model

S5JB0A7206065

Measured thermal switch for resistance at 20 °C (68 °F)

**Thermal switch resistance**
**Standard: Approx. 50 or less mΩ (DC 12 V, 5 A)**

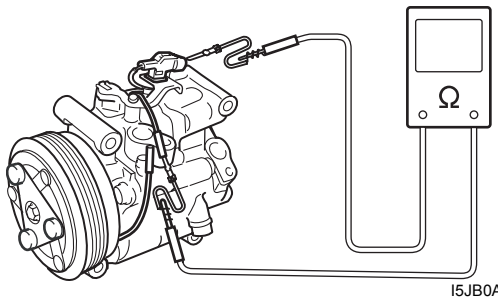

I5JB0A720079-01

www.cargeek.ir

www.CarGeek.ir

## Thermal Switch Removal and Installation for M16 Engine Model

S5JB0A7206066

### Removal

1) Disconnect negative (–) cable from battery.
2) Disconnect thermal switch connectors.
3) Remove thermal switch (1) from compressor assembly (2) using flat head (3).

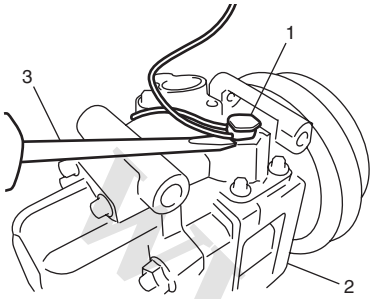


I5JB0A720080-01

### Installation

Reverse removal procedure noting the following.

- Clean installation part of compressor body (3) and thermal switch (1).
- Apply silicon (2) to thermal switch (1). Use specified silicon in thermal switch kit.

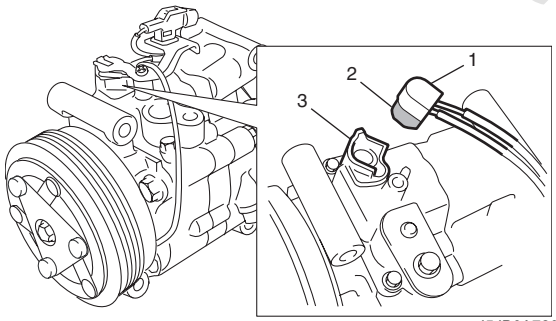


I5JB0A720081-02

## Relief Valve On-Vehicle Inspection for M16 Engine Model

S5JB0A7206067

Using special tool, check is there is refrigerant leakage.
If there is refrigerant leakage, replace relief valve (1).

**Special tool**
**(A) : 09990–86011**

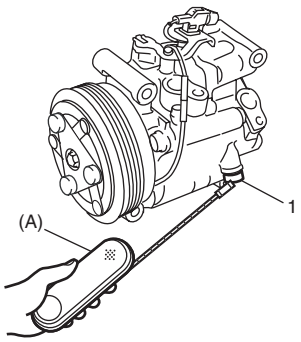


I5JB0A720082-02

## Relief Valve On-Vehicle Inspection For J20 Engine Model

S5JB0A7206068

Using special tool (A), check is there is refrigerant leakage.
If there is refrigerant leakage, replace compressor body.

**Special tool**
**(A): 09990–86011**

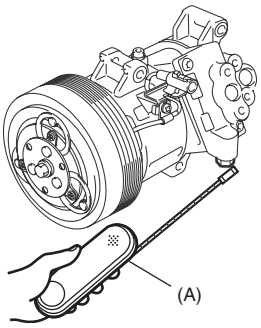


I5JB0A720083-01

## Relief Valve Removal and Installation for M16 Engine Model

S5JB0A7206069

### Removal

1) Removal compressor from vehicle. Referring to “Compressor Assembly Removal and Installation for M16 Engine Model: ”.
2) Remove relief valve (1) and O-ring from compressor body (2).

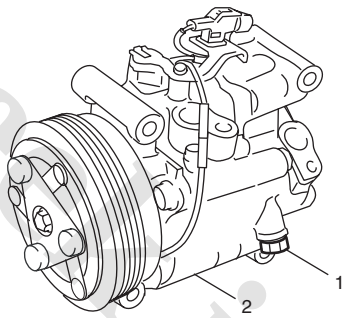


I5JB0A720084-01

www.cargeek.ir

www.CarGeek.ir


**Installation**

- Reverse removal procedure nothing the following instructions.
- Do not reuse relief valve O-ring (1).
- Apply compressor oil to O-ring (1) and install O-ring (1) to relief valve (2).
- Tighten relief valve (2) to specified torque.

  **Tightening torque**
  **Relief valve (a): 9 N·m (0.9 kgf-m, 6.5 lb-ft)**

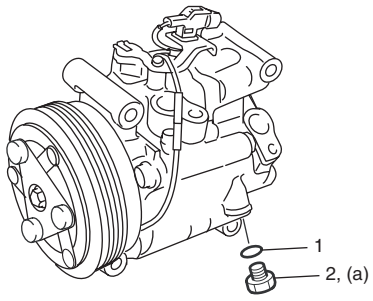

I5JB0A720085-02

# Specifications

## Tightening Torque Specifications

S5JB0A7207001

| Fastening part | Tightening torque | | | Note |
|---|---|---|---|---|
| | N·m | kgf-m | lb-ft | |
| Refrigerant line bolt | 12 | 1.2 | 9.0 | ☞ |
| A/C refrigerant pressure sensor | 11 | 1.1 | 8.0 | ☞ |
| Compressor mounting bolt for M16 engine model | 25 | 2.5 | 18.0 | ☞ |
| Compressor mounting bolt for J20 engine model | 25 | 2.5 | 18.0 | ☞ |
| Magnet clutch coil bolt | 4.9 | 0.49 | 4.0 | ☞ |
| Armature plate bolt | 15 | 1.5 | 11.0 | ☞ |
| Armature plate bolt | 21 | 2.1 | 15.5 | ☞ |
| Relief valve | 9 | 0.9 | 6.5 | ☞ |

**NOTE**

**The specified tightening torque is also described in the following.**
**“Magnet Clutch Components for M16 Engine Model: ”**
**“Magnet Clutch Components for J20 Engine Model: ”**

**Reference:**
For the tightening torque of fastener not specified in this section, refer to “Fastener Information: in Section 0A”.

www.cargeek.ir

 www.CarGeek.ir

# Special Tools and Equipment

## Recommended Service Material

S5JB0A7208001

| Material | SUZUKI recommended product or Specification | | Note |
|---|---|---|---|
| Compressor oil | Compressor oil (MATSUSHITADENKI) - Domestic | P/No.: 99000–99015–00A | (M16 engine model) ☞ |
| | Compressor oil (DH-PS, 250cc) | P/No.: 99000–99022–00E | (J20 engine model) ☞ |

**NOTE**

**Required service material is also described in the following.**
**“Precautions on Servicing Refrigerant Line: ”**

## Special Tool

S5JB0A7208002

| | |
|---|---|
| 09900–06107<br>Snap ring pliers (opening type)<br>☞ / ☞ / ☞ / ☞ / ☞ / ☞ / ☞<br> 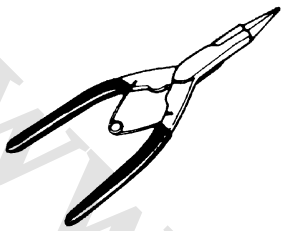 | 09951–15510<br>Magnet clutch installer<br>☞ / ☞<br> 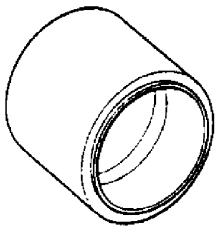 |
| 09990–86011<br>Gas leak detector<br>☞ / ☞ / ☞<br> 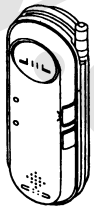 | 09991–06310<br>Armature plate holder<br>☞ / ☞ / ☞ / ☞<br> 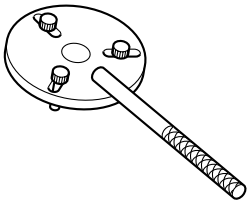 |
| SUZUKI scan tool<br>—<br>This kit includes following items. 1. Tech 2, 2. PCMCIA card, 3. DLC cable, 4. SAE 16/19 adapter, 5. Cigarette cable, 6. DLC loopback adapter, 7. Battery power cable, 8. RS232 cable, 9. RS232 adapter, 10. RS232 loop back connector, 11. Storage case, 12. Power supply ☞ / ☞<br> 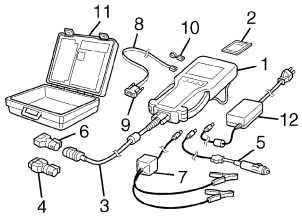 | |

www.cargeek.ir

www.cargeek.ir

www.CarGeek.ir


# Section 8

# Restraint

## CONTENTS


**Precautions ..... 8-1**
**Precautions ..... 8-1**
Precautions on Restraint ..... 8-1

**Seat Belts ..... 8A-1**
**Precautions ..... 8A-1**
Precautions on Service and Diagnosis of Seat Belt ..... 8A-1
**General Description ..... 8A-1**
Seat Belt Construction ..... 8A-1
**Diagnostic Information and Procedures ..... 8A-2**
Repair and Inspection Required after Accident ..... 8A-2
**Repair Instructions ..... 8A-3**
Front Seat Belt Components ..... 8A-3
Front Seat Belt Removal and Installation ..... 8A-4
Front Seat Belt Inspection ..... 8A-4
Rear Seat Belt Components ..... 8A-6
Rear Seat Belt Removal and Installation ..... 8A-7
Rear Seat Belt Inspection ..... 8A-7
**Specifications ..... 8A-7**
Tightening Torque Specifications ..... 8A-7

**Air Bag System ..... 8B-1**
**Precautions ..... 8B-1**
Precautions on Service and Diagnosis of Air Bag System ..... 8B-1
Precautions on Handling and Storage of Air Bag System Components ..... 8B-1
Precautions on Disposal of Air Bag and Seat Belt Pretensioner ..... 8B-5
**General Description ..... 8B-5**
Air Bag System Construction ..... 8B-5
Air Bag System Input / Output Table ..... 8B-6
**Schematic and Routing Diagram ..... 8B-7**
Air Bag System Wiring Circuit Diagram ..... 8B-7
**Component Location ..... 8B-11**
Air Bag System Components, Wiring and Connectors Location ..... 8B-11
**Diagnostic Information and Procedures ..... 8B-12**
Air Bag Diagnostic System Check ..... 8B-12
Air Bag Diagnostic System Check Flow ..... 8B-12
DTC Table ..... 8B-14
DTC Check ..... 8B-16
DTC Clearance ..... 8B-17
Scan Tool Data ..... 8B-18
“AIR BAG” Warning Lamp Comes ON Steady ..... 8B-19
“AIR BAG” Warning Lamp Does Not Come ON ..... 8B-22
“AIR BAG” Warning Lamp Flashes ..... 8B-23
“AIR BAG” Warning Lamp Cannot Indicate Flashing Pattern of DTC (If Equipped with “AIR BAG” Monitor Coupler) ..... 8B-24
DTC B1013: SDM fault ..... 8B-25
DTC B1016: Power Source Voltage High ..... 8B-25
DTC B1017: Power Source Voltage Low ..... 8B-27
DTC B1021: Air Bag Module Deployed ..... 8B-29
DTC B1031: Driver Air Bag Initiator Circuit Resistance High ..... 8B-30
DTC B1032: Driver Air Bag Initiator Circuit Resistance Low ..... 8B-34
DTC B1033: Driver Air Bag Initiator Circuit Short to Ground ..... 8B-37
DTC B1034: Driver Air Bag Initiator Circuit Short to Power Circuit ..... 8B-40
DTC B1041: Passenger Air Bag Initiator Circuit Resistance High ..... 8B-43
DTC B1042: Passenger Air Bag Initiator Circuit Resistance Low ..... 8B-46
DTC B1043: Passenger Air Bag Initiator Circuit Short to Ground ..... 8B-49
DTC B1044: Passenger Air Bag Initiator Circuit Short to Power Circuit ..... 8B-52
DTC B1051 / B1055: Driver / Passenger Pretensioner Initiator Circuit Resistance High ..... 8B-55
DTC B1052 / B1056: Driver / Passenger Pretensioner Initiator Circuit Resistance Low ..... 8B-58
DTC B1053 / B1057: Driver / Passenger Pretensioner Initiator Circuit Short to Ground ..... 8B-61
DTC B1054 / B1058: Driver / Passenger Pretensioner Initiator Circuit Short to Power Circuit ..... 8B-64
DTC B1073 / B1077: Driver / Passenger Forward-Sensor Circuit Short to Ground ..... 8B-67
DTC B1074 / B1078: Driver / Passenger Forward-Sensor Circuit Short to Power Circuit or Open ..... 8B-69
DTC B1085: Wrong Side-Sensor ID ..... 8B-71
DTC B1086 / B1096: Left / Right Side-Sensor Performance Problem ..... 8B-71
DTC B1087 / B1097: Left / Right Side-Sensor Communication Error ..... 8B-71
DTC B1321 / B1325: Left / Right Side-Air Bag Initiator Circuit Resistance High ..... 8B-73


8

www.cargeek.ir

www.CarGeek.ir

DTC B1322 / B1326: Left / Right Side-Air Bag Initiator Circuit Resistance Low ..... 8B-77
DTC B1323 / B1327: Left / Right Side-Air Bag Initiator Circuit Short to Ground ..... 8B-80
DTC B1324 / B1328: Left / Right Side-Air Bag Initiator Circuit Short to Power Circuit ..... 8B-83
DTC B1331 / B1335: Left / Right Side Curtain-Air Bag Initiator Circuit Resistance High ..... 8B-85
DTC B1332 / B1336: Left / Right Side Curtain-Air Bag Initiator Circuit Resistance Low ..... 8B-88
DTC B1333 / B1337: Left / Right Side Curtain-Air Bag Initiator Circuit Short to Ground ..... 8B-90
DTC B1334 / B1338: Left / Right Side Curtain-Air Bag Initiator Circuit Short to Power Circuit ..... 8B-92
Inspection of Intermittent and Poor Connections ..... 8B-93
Repair and Inspection Required after Accident ..... 8B-94
**Repair Instructions ..... 8B-97**
Disabling Air Bag System ..... 8B-97
Enabling Air Bag System ..... 8B-98
SDM Removal and Installation ..... 8B-98
SDM Inspection ..... 8B-99
Driver Air Bag (Inflator) Module Removal and Installation ..... 8B-100
Driver Air Bag (Inflator) Module Inspection ..... 8B-101
Passenger Air Bag (Inflator) Module Removal and Installation ..... 8B-101
Passenger Air Bag (Inflator) Module Inspection ..... 8B-103
Side-Air Bag (Inflator) Module Removal and Installation ..... 8B-103
Side-Air Bag (Inflator) Inspection ..... 8B-105
Side Curtain-Air Bag (Inflator) Module Removal and Installation ..... 8B-105
Side Curtain-Air Bag (Inflator) Module Inspection ..... 8B-107
Forward-Sensor Removal and Installation ..... 8B-107
Forward-Sensor Inspection ..... 8B-108
Side-Sensor Removal and Installation ..... 8B-108
Side-Sensor Inspection ..... 8B-109
Air Bag (Inflator) Module and Seat Belt Pretensioner Disposal ..... 8B-110
Deployed Air Bag (Inflator) Module and Activated Seat Belt Pretensioner Disposal ..... 8B-120
**Specifications ..... 8B-121**
Tightening Torque Specifications ..... 8B-121
**Special Tools and Equipment ..... 8B-121**
Use of Special Tools ..... 8B-121
Recommended Service Material ..... 8B-122
Special Tool ..... 8B-123

www.cargeek.ir

www.CarGeek.ir


# Precautions

## Precautions

### Precautions on Restraint

S5JB0A8000001

**Air Bag System Service Warning**
Refer to “Air Bag Warning: in Section 00”.

**Fastener Caution**
Refer to “Fastener Caution: in Section 00”.

**Precautions on Service and Diagnosis of Seat Belt**
Refer to “Precautions on Service and Diagnosis of Seat Belt: in Section 8A”.

**Precautions on Service and Diagnosis of Air Bag System**
Refer to “Precautions on Service and Diagnosis of Air Bag System: in Section 8B”.

**Precautions on Handling and Storage of Air Bag Components**
Refer to “Precautions on Handling and Storage of Air Bag System Components: in Section 8B”.

**Precautions on Disposal of Air Bag and Seat Belt Pretensioner**
Refer to “Precautions on Disposal of Air Bag and Seat Belt Pretensioner: in Section 8B”.

www.cargeek.ir

www.cargeek.ir

www.CarGeek.ir

# Seat Belts

## Precautions

### Precautions on Service and Diagnosis of Seat Belt

S5JB0A8100001

**⚠ WARNING**

**If replacing seat belt is necessary, replace buckle and seat belt assembly together as a set. This is for the reason of ensuring locking of tongue plate with buckle. If these parts are replaced individually, such a locking condition may become unreliable. For this reason, SUZUKI will supply only the spare buckle and seat belt assembly in a set part.**

Before servicing or replacing seat belts, refer to the following precautionary items.

- Seat belts should be normal relative to strap retractor and buckle portions.
- Keep sharp edges and damaging objects away from belts.
- Avoid bending or damaging any portion of belt buckle or latch plate.
- Do not bleach or dye belt webbing. (Use only mild soap and lukewarm water to clean it.)
- When installing a seat belt anchor bolt, it should be tightened by hand at first to prevent cross-threading and then to specified torque.
- Do not attempt any repairs on retractor mechanisms or retractor covers. Replace defective assemblies with new replacement parts.
- Keep belts dry and clean at all times.
- If there exist any parts in question, replace such parts.
- Replace belts whose webbing is cut or otherwise damaged.
- Do not put anything into trim panel opening which seat belt webbing passes through.

## General Description

### Seat Belt Construction

S5JB0A8101001

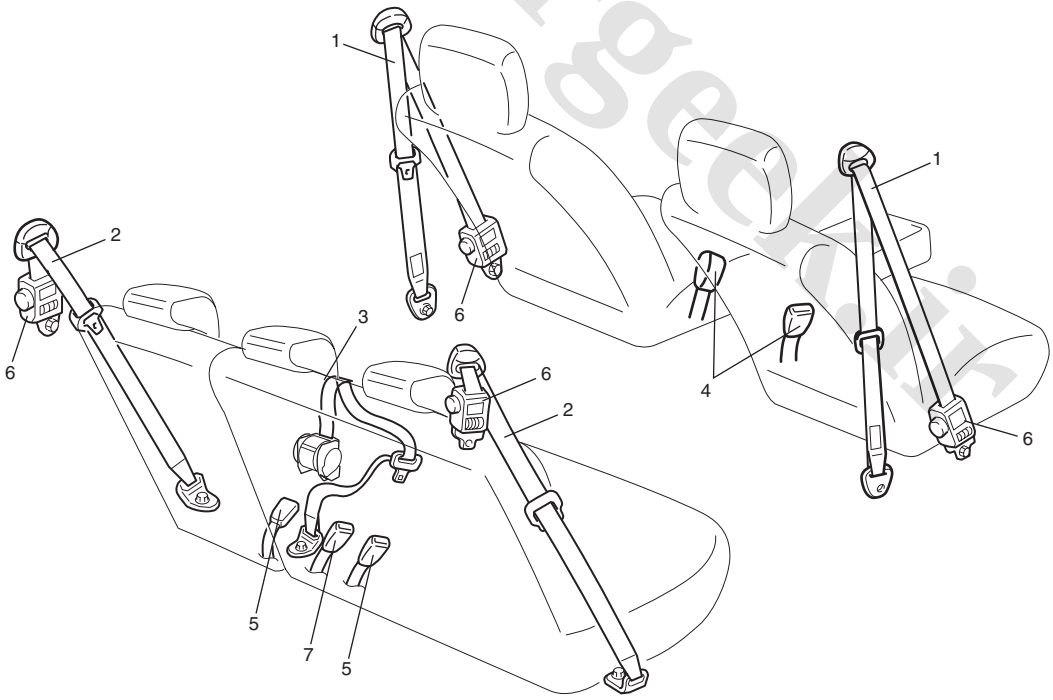


I5JB0A810001-01

| | | |
|---|---|---|
| 1. Front seat belt assembly (with ELR and pretensioner) | 4. Buckle for front seat belt assembly | 7. Buckle for rear center seat belt |
| 2. Rear seat belt assembly (with A-ELR) | 5. Buckle for rear seat belt assembly | |
| 3. Rear center seat belt (with A-ELR) | 6. Retractor assembly | |

www.cargeek.ir

www.CarGeek.ir


**Seat Belt with ELR**
The seat belt with emergency locking retractor (ELR) is designed so that it locks immediately (to prevent the webbing from being pulled out of the retractor any further) when any of the following items is detected as exceeding each set value;

- Speed at which the webbing is pulled out of the retractor.
- Acceleration or deceleration of the vehicle speed.
- Inclination.

**Seat Belt with A-ELR**
The automatic and emergency locking retractor (A-ELR) works as an Emergency Locking Retractor (ELR) till its webbing is pulled all the way out and then on as an Automatic Locking Retractor (ALR) till it is retracted fully.
ALR: Automatically locks when the webbing is pulled out from the retractor and allowed to retract even a little. Then the webbing can not be pulled out any further, unless it is wound all the way back into the retractor, which releases the lock and allows the webbing to be pulled out.

**Seat Belt with ELR and Pretensioner**
The seat belt with ELR and a pretensioner has a pretensioner mechanism which operates in linkage with the air bag in addition to the ELR.
The pretensioner is incorporated in retractor assembly and controlled by SDM as one of air bag system components. It will be activated at the same time as the driver and passenger air bag module when an impact at the front of vehicle exceeds the specified value.
When servicing seat belt (retractor assembly) with pretensioner, be sure to observe all WARNINGS and CAUTIONS and “Precautions on Service and Diagnosis of Air Bag System: in Section 8B”.

**⚠ CAUTION**

**Do not reuse the seat belt pretensioner (retractor assembly) that has activated. Replace it with a new seat belt assembly and buckle together as a set. For checking procedure of its activation, refer to “Repair and Inspection Required after Accident: in Section 8B”.**

**Seat Belt Remainder (if equipped)**
When driver’s seat belt is unfastened (under the following conditions), seat belt reminder light and warning buzzer inform that driver’s seat belt is unfastened. Seat belt reminder light located in combination meter and warning buzzer located inside BCM operate as follows:

- Seat belt reminder light comes on when driver’s seat belt is unfastened while ignition key switch is at ON position.
- If vehicle speed exceeds 15 km/h with seat belt unfastened, warning buzzer operates for approximately 95 seconds and seat belt reminder light flashes synchronously with buzzer. When warning buzzer stops operating, seat belt reminder light is turned on.
- If driver’s seat belt state is changed from “fastened” to “unfastened” while vehicle speed is above 15 km/h, warning buzzer operates for approximately 95 seconds and seat belt reminder light flashes synchronously with buzzer. When warning buzzer stops operating, seat belt reminder light is turned on.

# Diagnostic Information and Procedures

## Repair and Inspection Required after Accident

S5JB0A8104001

After an accident, whether the seat belt pretensioner has been activated or not, be sure to perform checks and repairs described on “Repair and Inspection Required after Accident: in Section 8B”.

www.cargeek.ir

www.CarGeek.ir

# Repair Instructions

## Front Seat Belt Components

S5JB0A8106001

**⚠ WARNING**

- **Never attempt to disassemble or repair the seat belt pretensioner (retractor assembly). If any abnormality is found, be sure to replace it with new one as an assembly.**
- **Be sure to read "Precautions on Service and Diagnosis of Seat Belt: " before starting to work and observe every precaution during work. Neglecting them may result in personal injury or unactivation of the seat belt pretensioner when necessary.**

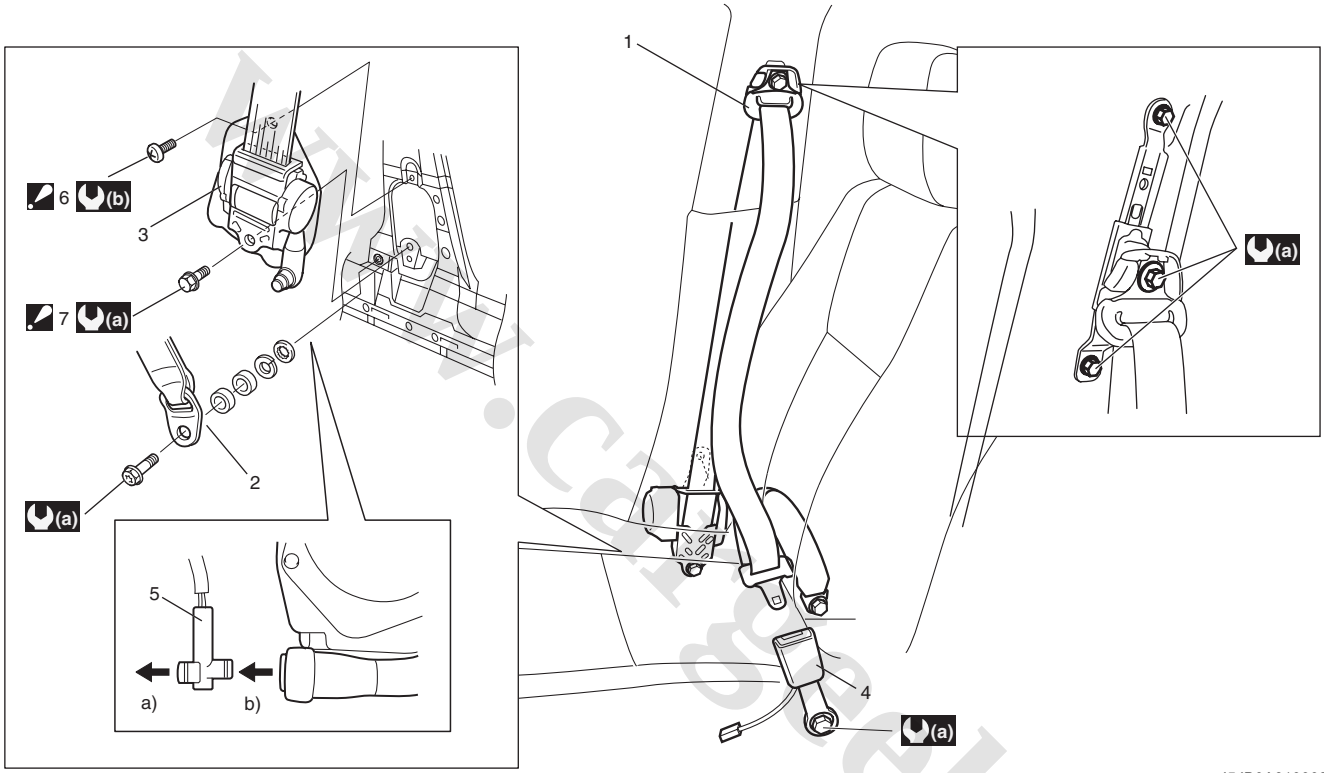


I5JB0A810002-01

| | | |
|---|---|---|
| 1. Upper anchor | 4. Buckle | 7. Retractor assembly lower mounting bolt<br>: After tightening lower bolt, tighten upper bolt. |
| 2. Lower anchor | 5. Yellow connector (for seat belt pretensioner) | (a) : 35 N·m (3.5 kgf-m, 25.5 lb-ft) |
| 3. Retractor assembly | 6. Retractor assembly upper mounting bolt<br>: After tightening lower bolt, tighten upper bolt. | (b) : 5.5 N·m (0.55 kgf-m, 4.0 lb-ft) |

www.cargeek.ir

www.CarGeek.ir


## Front Seat Belt Removal and Installation

S5JB0A8106002

**⚠ WARNING**

- **Never attempt to disassemble or repair the seat belt pretensioner (retractor assembly). If any abnormality is found, be sure to replace it with new one as an assembly.**
- **Be sure to read "Precautions on Service and Diagnosis of Seat Belt: " before starting to work and observe every precaution during work. Neglecting them may result in personal injury or unactivation of the seat belt pretensioner when necessary.**

### Removal

1) Disconnect negative (–) cable at battery.
2) Disable air bag system. Refer to "Disabling Air Bag System: in Section 8B".
3) Remove center pillar lower trim.
4) Disconnect Yellow connector (1) from seat belt pretensioner (2).
   a) Release locking of lock button (3).
   b) After unlocked, disconnect connector.

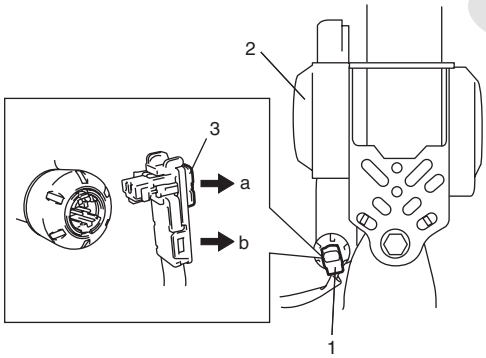


I5JB0A810003-01

5) Remove front seat belts from the vehicle.

### Installation

Install in reverse order of removal, noting the following.

- Seat belt anchor bolts should have an unified fine thread (7/16-20 UNF). Under no circumstances should any different sized or metric screw threads be used.
- Connect Yellow connector (1) to seat belt pretensioner securely.
  a. Connect connector.
  b. Lock connector with lock button (2).

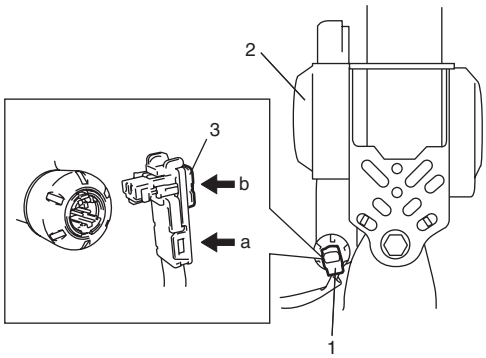


I5JB0A810004-01

- Enable air bag system. Refer to "Enabling Air Bag System: in Section 8B".

## Front Seat Belt Inspection

S5JB0A8106003

**⚠ WARNING**

- **Never attempt to disassemble or repair the seat belt pretensioner (retractor assembly). If any abnormality is found, be sure to replace it with new one as an assembly.**
- **Be sure to read "Precautions on Service and Diagnosis of Seat Belt: ", before starting to work and observe every precaution during work. Neglecting them may result in personal injury or unactivation of the seat belt pretensioner when necessary.**
- **Never measure resistance of pretensioner or disassemble it. Otherwise, personal injury may result.**

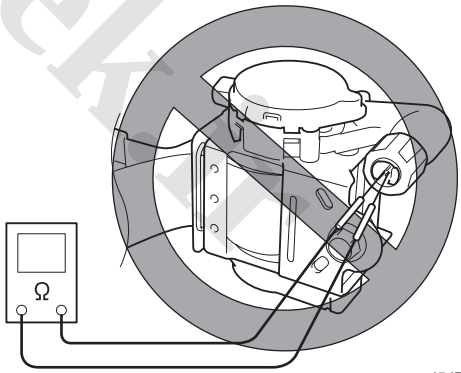


I5JB0A810005-01

www.cargeek.ir

www.CarGeek.ir

⚠ **CAUTION**

**If seat belt pretensioner (retractor assembly) was dropped from a height of 30 cm (1 ft) or more, it should be replaced.**

Seat belts and attaching parts can affect the vital components and systems of a vehicle.
Therefore, they should be inspected carefully and replaced with genuine parts only.

### Seat Belt

- The seat belt webbing or strap should be free from damage.

### Retractor Assembly (with Seat Belt Pretensioner)

1) Let the seat belt retract fully to confirm its easy retraction.
   - The retractor assembly should lock webbing when pulled quickly.
   - The front seat belt retractor assembly (1) should pass the inspection and should lock webbing even when tilted (approx. 15°) toward the fore and aft or right and left directions.
2) Check retractor assembly (1) with seat belt pretensioner appearance visually for following symptoms and if any one of them is applicable, replace it with a new one as an assembly.
   - Pretensioner has activated.
   - There is a crack in seat belt pretensioner (retractor assembly).
   - Seat belt pretensioner (retractor assembly) is damaged or a strong impact (e.g., dropping) was applied to it.

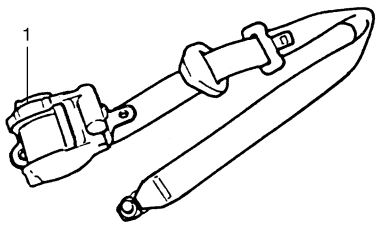


I2RH01810005-01

### Anchor Bolt

- Anchor bolts should be torqued to specification.

### Belt Latch

- It should be secure when latched.

### Seat Belt Switch

Check driver side seat belt switch for continuity by using ohmmeter.

**<u>Seat belt switch specification</u>**
**Without inserted buckle tongue to buckle catch:**
**Terminal “A” and “B”: Continuity**
**With inserted buckle tongue to buckle catch:**
**Terminal “A” and “B”: No continuity**

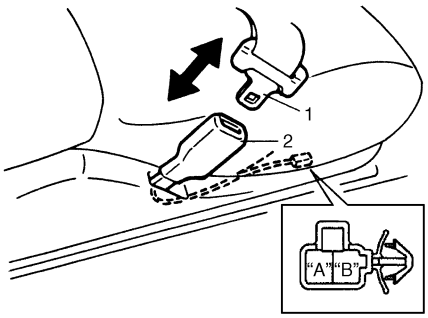


I4RS0B810001-01

| | |
|---|---|
| 1. | Buckle tongue |
| 2. | Buckle catch |

www.cargeek.ir

www.CarGeek.ir


## Rear Seat Belt Components

S5JB0A8106004

**⚠ WARNING**

**Be sure to read “Precautions on Service and Diagnosis of Seat Belt: ” before starting to work and observe every precaution during work.**

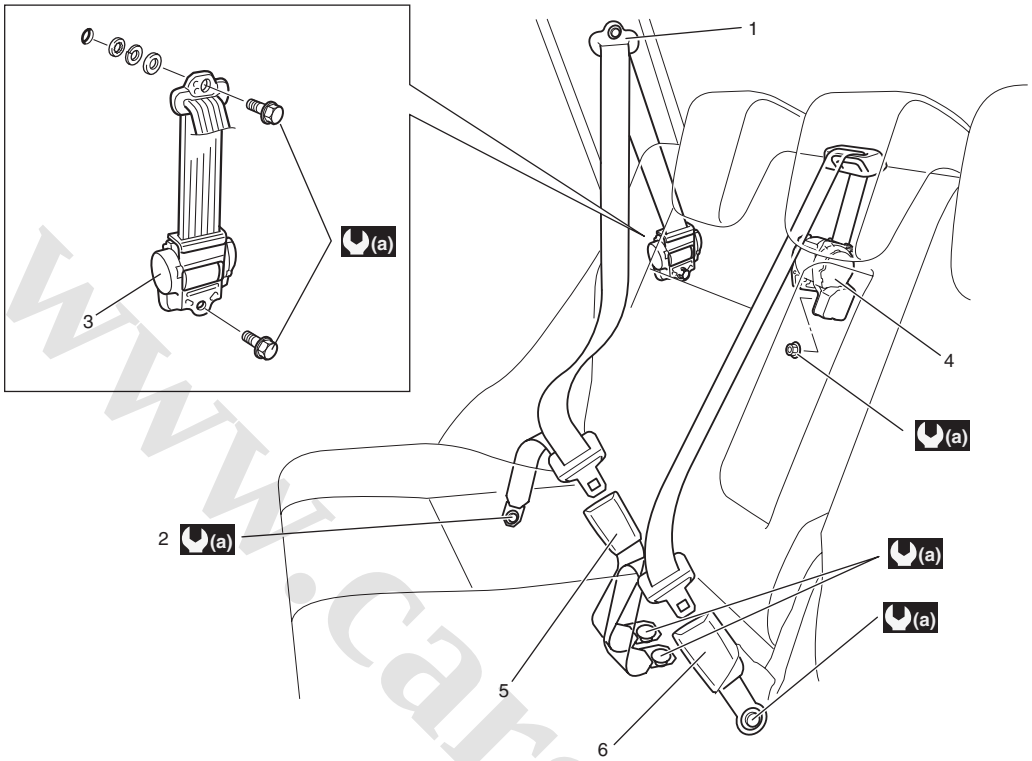


I5JB0A810006-01

| | | |
|---|---|---|
| 1. Upper anchor | 4. Rear center retractor assembly | 7. Rear seat belt |
| 2. Lower anchor | 5. Buckle for rear seat belt | (a) : 35 N·m (3.5 kgf-m, 25.5 lb-ft) |
| 3. Retractor assembly | 6. Buckle for rear center seat belt | |

www.cargeek.ir

www.CarGeek.ir

## Rear Seat Belt Removal and Installation

S5JB0A8106005

**⚠ WARNING**

**Be sure to read "Precautions on Service and Diagnosis of Seat Belt: " before starting to work and observe every precaution during work.**

### Removal

1) Remove rear side sill scuff, rear side lower trim and rear pillar trim referring to "Head Lining Removal and Installation: in Section 9H".
2) Remove rear seat belt referring to "Rear Seat Belt Components: ".

### Installation

Reverse removal procedure for installation noting the following.

- Seat belt anchor bolts should have an unified fine thread (7/16-20 UNF). Under no circumstances should any different sized or metric screw threads be used.

## Rear Seat Belt Inspection

S5JB0A8106006

**⚠ WARNING**

**Be sure to read "Precautions on Service and Diagnosis of Seat Belt: " before starting to work and observe every precaution during work.**

- Check the rear seat belt in the same way as "Front Seat Belt Inspection: ".
- As to seat belts with A-ELR, check them as follows.
  - With vehicle at stop, pull seat belt all the way out, let it retract a little and try to pull it. It should not be pulled out, that is, it should be locked where retracted.
  - Let seat belt retract to its original state. Next, pull it half way out, let it retract a little and try to pull it again. It should be pulled out smoothly, that is it should not be locked at this time.

# Specifications

## Tightening Torque Specifications

S5JB0A8107001

**NOTE**

**The specified tightening torque is also described in the following.**
**"Front Seat Belt Components: "**
**"Rear Seat Belt Components: "**

**Reference:**
For the tightening torque of fastener not specified in this section, refer to "Fastener Information: in Section 0A".

www.cargeek.ir

www.CarGeek.ir


# Air Bag System

## Precautions

### Precautions on Service and Diagnosis of Air Bag System

S5JB0A8200001

**⚠ WARNING**

- **If the air bag system and another vehicle system both need repair, SUZUKI recommends that the air bag system be repaired first, to help avoid unintended air bag system activation.**
- **Do not modify the steering wheel, dashboard, both front seat or any other on or around air bag system components. Modifications can adversely affect air bag system performance and lead to injury.**
- **Be sure to follow the procedures described in this section. Failure to follow procedures could result in possible air bag system activation, personal injury or unneeded air bag system repairs.**

- WARNING / CAUTION labels are attached on each part of air bag system components (SDM, air bag (inflator) modules and seat belt pretensioners). Be sure to follow the instructions.
- Many of service procedures require disconnection of “A/B” fuse and air bag (inflator) module(s) (driver, passenger, side of both sides and curtain of both sides) from initiator circuit to avoid an accidental deployment.
- Do not apply power to the air bag system unless all components are connected or a diagnostic flow requests it, as this will set a DTC.
- The “Air Bag Diagnostic System Check: ” must be the starting point of any air bag diagnostics. The “Air Bag Diagnostic System Check: ” will verify proper “AIR BAG” warning lamp operation and will lead you to the correct flow to diagnose any air bag malfunctions. Bypassing these procedures may result in extended diagnostic time, incorrect diagnosis, and incorrect parts replacements.
- Never use air bag component parts from another vehicle.
- If the vehicle will be exposed to temperatures over 93 °C (200 °F) (for example, during a paint baking process), remove the air bag system components beforehand to avoid component damage or unintended system activation.
- When handling the air bag (inflator) modules (driver, passenger, side of both sides and curtain of both sides), seat belt pretensioners (driver and passenger), SDM, forward-sensor or side-sensor, be careful not to drop it or apply an impact to it. If an excessive impact was applied (e.g., SDM, forward-sensor and side-sensor are dropped, air bag (inflator) module is dropped from a height of 90 cm (3 ft) or more, seat belt pretensioner (retractor assembly) is dropped from a height of 30 cm (1 ft) or more), never attempt disassembly or repair but replace it with a new one.
- When using electric welding, be sure to disconnect air bag (inflator) module connectors (driver, passenger, side of both sides and curtain of both sides) and seat belt pretensioner connectors (driver and passenger) respectively.
- When applying paint around the air bag system related parts, use care so that the harness or connector will not be exposed to the paint mist.
- Never expose air bag system component parts directly to hot air (drying or baking the vehicle after painting) or flames.

**⚠ WARNING**

**When performing service on or around air bag system components or air bag wiring, follow the procedures listed in “Disabling Air Bag System: ” to temporarily disable the air bag system.**
**Failure to follow procedures could result in possible air bag system activation, personal injury or unneeded air bag system repairs.**

### Precautions on Handling and Storage of Air Bag System Components

S5JB0A8200002

**SDM**

**⚠ WARNING**

**Never power up air bag system when SDM is not rigidly attached to the vehicle. Otherwise, personal injury may result.**

**⚠ CAUTION**

**After detecting one time of such collision as to meet deployment conditions, SDM must not be used. Refer to “Air Bag Diagnostic System Check: ” when checking SDM.**

www.cargeek.ir

www.CarGeek.ir

- Never attempt disassembly of SDM.
- When storing SDM, select a place where neither high temperature nor high humidity is anticipated and oil, water and dust are kept off.

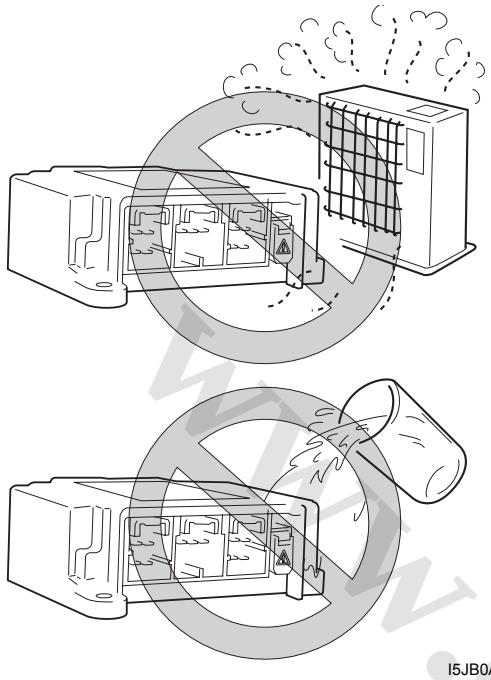

I5JB0A820001-01

- If SDM has been dropped, replace it with a new one.
- If SDM installation part of floor was damaged, repair that part completely before reinstallation.
- All SDM and mounting bracket fasteners must be carefully torqued and the arrow must be pointed toward the front of the vehicle to ensure proper operation of the air bag system.

**Live (Undeployed) Air Bag (Inflator) Modules**

Special care is necessary when handling and storing a live (undeployed) air bag (inflator) modules.
The rapid gas generation produced during deployment of the air bag could cause the air bag (inflator) module, or an object in front of the air bag (inflator) module, to be thrown through the air in the unlikely event of an accidental deployment.

**⚠ WARNING**

**Never attempt to measure the resistance of the air bag (inflator) modules (driver, passenger and side of both sides and curtain of both sides). It is very dangerous as the electric current from the tester may deploy the air bag.**

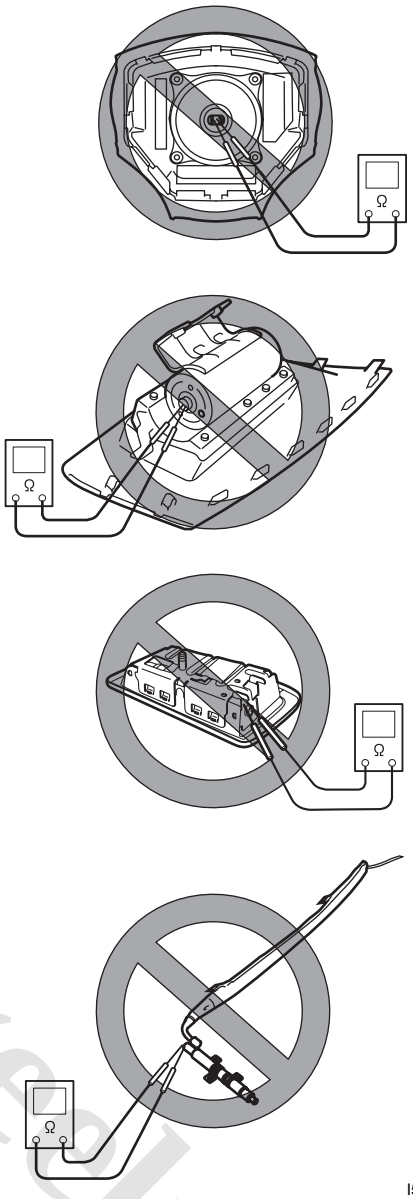


I5JB0A820002-01

- Never attempt disassembly of the air bag (inflator) modules.
- If any abnormality is found, be sure to replace it with new one as an assembly.
- When an abnormality is noted as existing in the live (undeployed) air bag (inflator) module, be sure to deploy it before discarding it.
- When grease, cleaning agent, oil, water, etc., got on the air bag (inflator) modules (driver, passenger, side of both sides and curtain of both sides), wipe it off immediately with a dry cloth.
- If air bag (inflator) module was dropped from a height of 90 cm (3 ft) or more, it should be replaced with a new one as an assembly.

www.cargeek.ir

www.CarGeek.ir


**⚠ WARNING**

- **For handling and storage of a live air bag (inflator) module, select a place where the ambient temperature below 65 °C (150 °F), without high humidity and away from electric noise.**
- **When carrying a live air bag (inflator) module, make sure the bag opening is pointed away from you. In case of an accidental deployment, the bag will then deploy with minimal chance of injury. Never carry the air bag (inflator) module by the wires or connector on the underside of the module.**

**Otherwise, personal injury may result.**

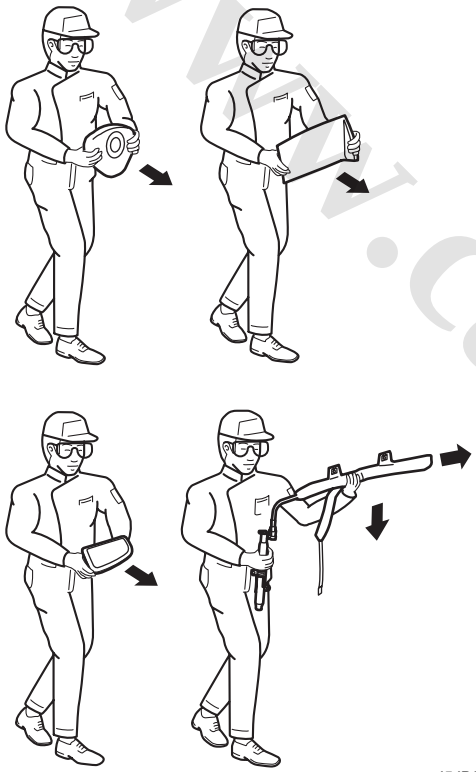

I5JB0A820003-01

**⚠ WARNING**

**When leaving or storing live air bag (inflator) module unattended on bench or other surface, always its bag (trim cover) facing up and away from surface.**
**It is also prohibited to place anything on top of the trim cover and stack air bag (inflator) modules.**
**This is necessary so that a free space is provided to allow the air bag to expand in the unlikely event of accidental deployment.**
**Otherwise, personal injury may result.**

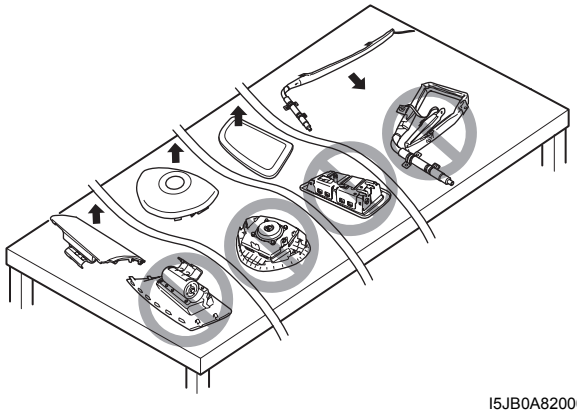

I5JB0A820004-01

**Live (Inactivated) Seat Belt Pretensioner**
Special care is necessary when handling and storing a live (inactivated) seat belt pretensioners.
Also, when the seat belt pretensioners activate, gas is generated and the seat belt (1) is retracted into the retractor assembly (2) quickly.
Note, therefore, that if they activate accidentally, the seat belt pretensioners and other object(s) around them may be thrown through the air.

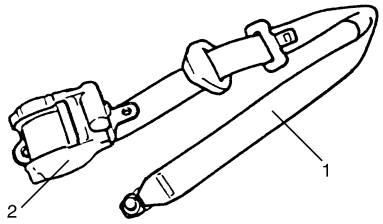


I3JA01820043-01

**⚠ WARNING**

**Never attempt to measure the resistance of the seat belt pretensioners. It is very dangerous as the electric current from the tester may activate pretensioner.**

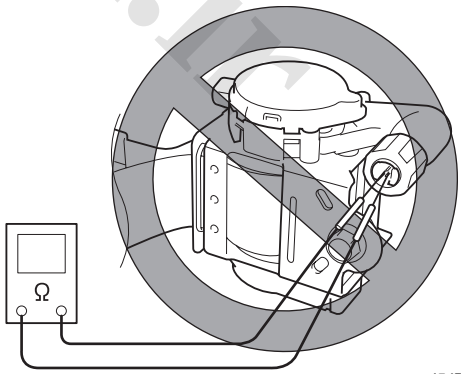


I5JB0A820005-01

- Never attempt to disassemble the seat belt pretensioners (retractor assembly).
- If any abnormality is found, be sure to replace it with new one as an assembly.

www.cargeek.ir

www.CarGeek.ir

- When an abnormality is noted as existing in the live (inactivated) seat belt pretensioner, be sure to activate it before discarding it.
- When grease, cleaning agent oil, water, etc., got on the seat belt pretensioners (retractor assembly), wipe it off immediately with a dry cloth.
- If seat belt pretensioner was dropped from a height of 30 cm (1 ft) or more, it should be replaced with a new one as an assembly.

**⚠ WARNING**

- **For handling and storage of a live seat belt pretensioner, select a place where the ambient temperature below 65 °C (150 °F), without high humidity and away from electric noise.**
- **Never carry the seat belt pretensioner by webbing.**
- **When placing a live seat belt pretensioner on the workbench or other surface, be sure not to lay it with its exhaust hole (1) provided side facing down. It is also prohibited to put something on its face with an exhaust hole (1) or to put a seat belt pretensioner on top of another.**

**Otherwise, personal injury may result.**

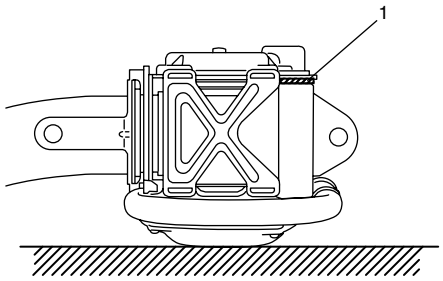

I2RH01820048-01

**Deployed Air Bag (Inflator) Module and Activated Seat Belt Pretensioner**

**⚠ WARNING**

- **The air bag (inflator) module and seat belt pretensioner immediately after deployment/activation is very hot. Wait for at least 30 minutes to cool it off before proceeding the work.**
- **Do not apply water, oil, etc. to deployed air bag (inflator) module and to activate seat belt pretensioner.**
- **After an air bag (inflator) module has been deployed, the surface of the air bag may contain a powdery residue. This powder consists primarily of cornstarch (used to lubricate the bag as it inflates) and by-products of the chemical reaction. As with many service procedures, gloves and safety glasses should be worn.**
- **Wash your hands with mild soap and water after completing the work.**

Refer to the procedure described under “Deployed Air Bag (Inflator) Module and Activated Seat Belt Pretensioner Disposal: ” for disposal.

**Air Bag Wire Harness and Connector**

Air bag wire harness is included in main harness (1), instrument panel harness (2), floor harness (3) and seat harness (4). Air bag wire harness can be identified easily as the part of connector side wire harness is covered with a yellow protection tube. Be very careful when handling it.

- When an open in air bag wire harness, damaged wire harness, connector or terminal is found, replace wire harness, connectors and terminals as an assembly.
- When installing it, be careful so that the air bag wire harness is not caught or does not interfere with other parts.
- Make sure air bag system grounding point (5) is clean and ground is securely fastened for optimum metal-to-metal contact. Poor grounding can cause intermittent problems that are difficult to diagnose.

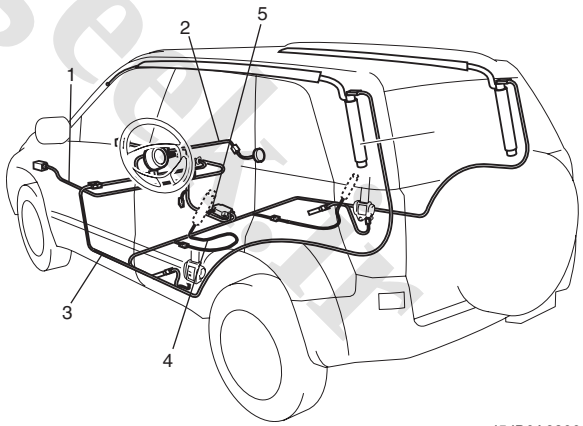

I5JB0A820006-01

www.cargeek.ir

www.CarGeek.ir


### Precautions on Disposal of Air Bag and Seat Belt Pretensioner

S5JB0A8200003

Do not dispose of the live (undeployed) air bag (inflator) modules and the live (inactivated) seat belt pretensioners.
When disposal is necessary, be sure to deploy / activate the air bag and seat belt pretensioner according to deployment / activation procedure described in “Air Bag (Inflator) Module and Seat Belt Pretensioner Disposal: ”.

**⚠ WARNING**

**Failure to follow proper air bag (inflator) module and seat belt pretensioner disposal procedures can result in air bag deployment and pretensioner activation which could cause personal injury. Undeployed air bag (inflator) module and inactivated seat belt pretensioner must not be disposed of through normal refuse channels.**
**The undeployed air bag (inflator) module and inactivated seat belt pretensioner contain substances that can cause severe illness or personal injury if the sealed container is damaged during disposal.**

## General Description

### Air Bag System Construction

S5JB0A8201001

With the air bag system which includes front air bags, side curtain-air bag and side-air bags for both the driver’s and passenger’s sides as well as the seat belt pretensioners, the sag of the seat belt is taken up (for seat belt with pretensioner), the driver air bag (inflator) module is deployed from the center of the steering column and the passenger air bag (inflator) module from the top of the instrument panel in front of the front passenger seat in occurrence of a front collision with an impact larger than a certain set value to supplement protection offered by the driver and front passenger seat belts.
Side-air bag (inflator) module is deployed from the side of the seat back in occurrence of a sideward collision with an impact larger than a certain set value.
Side curtain-air bag (inflator) module is deployed from the roof side in occurrence of a sideward collision with an impact larger than a certain set value.

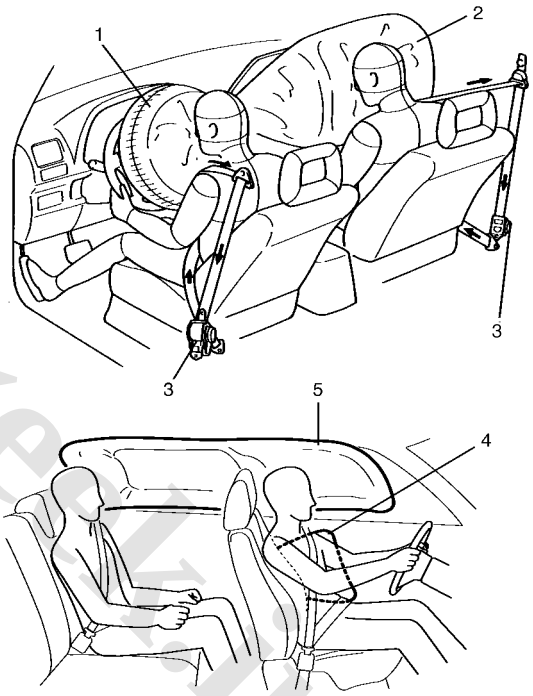


I4RS0B820002-02

| | |
|---|---|
| 1. Driver air bag | 4. Side-air bag |
| 2. Passenger air bag | 5. Side curtain-air bag |
| 3. Seat belt pretensioner | |

www.cargeek.ir

www.CarGeek.ir

The air bag system is designed to activate only in severe frontal and sideward collisions. It is not designed to activate in rear impacts, rollovers, or minor frontal and sideward collisions, since it would offer no protection in those types of accidents.

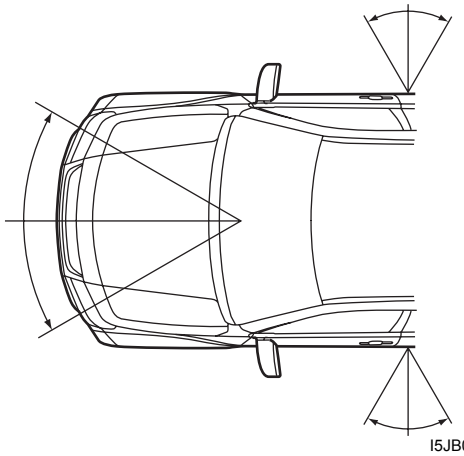

I5JB0A820007-01

## Air Bag System Input / Output Table

S5JB0A8201002

There are two types of air bag system of this model

- Consisting of 4 items, i.e., air bags for driver and front passenger and seat belts with pretensioner for driver and front passenger sides
- Consisting of 8 items, i.e., air bags for driver and front passenger, seat belts with pretensioner for driver and front passenger sides, side-air bags for driver and front passenger and curtain-air bags for driver and front passenger sides
  The side-air bag and curtain-air bag on the same side deploy at the same time only when an impact is applied to that side. For the details, refer to the table below.

| INPUT \ OUTPUT | | Driver air bag, Passenger air bag, Seat belt with pretensioner (LH) and Seat belt with pretensioner (RH) | Driver side-air bag and Driver side curtain-air bag | Passenger side-air bag and Passenger side curtain-air bag |
|---|---|---|---|---|
| Signal from sensor | Sensor in SDM and forward-sensor | ○ | — | — |
| | Driver side-sensor | — | ○ | — |
| | Passenger side-sensor | — | — | ○ |

I4RS0A820005-01

www.cargeek.ir

www.CarGeek.ir


# Schematic and Routing Diagram

## Air Bag System Wiring Circuit Diagram

S5JB0A8202001

### Air bag system without side-air bag and curtain-air bag

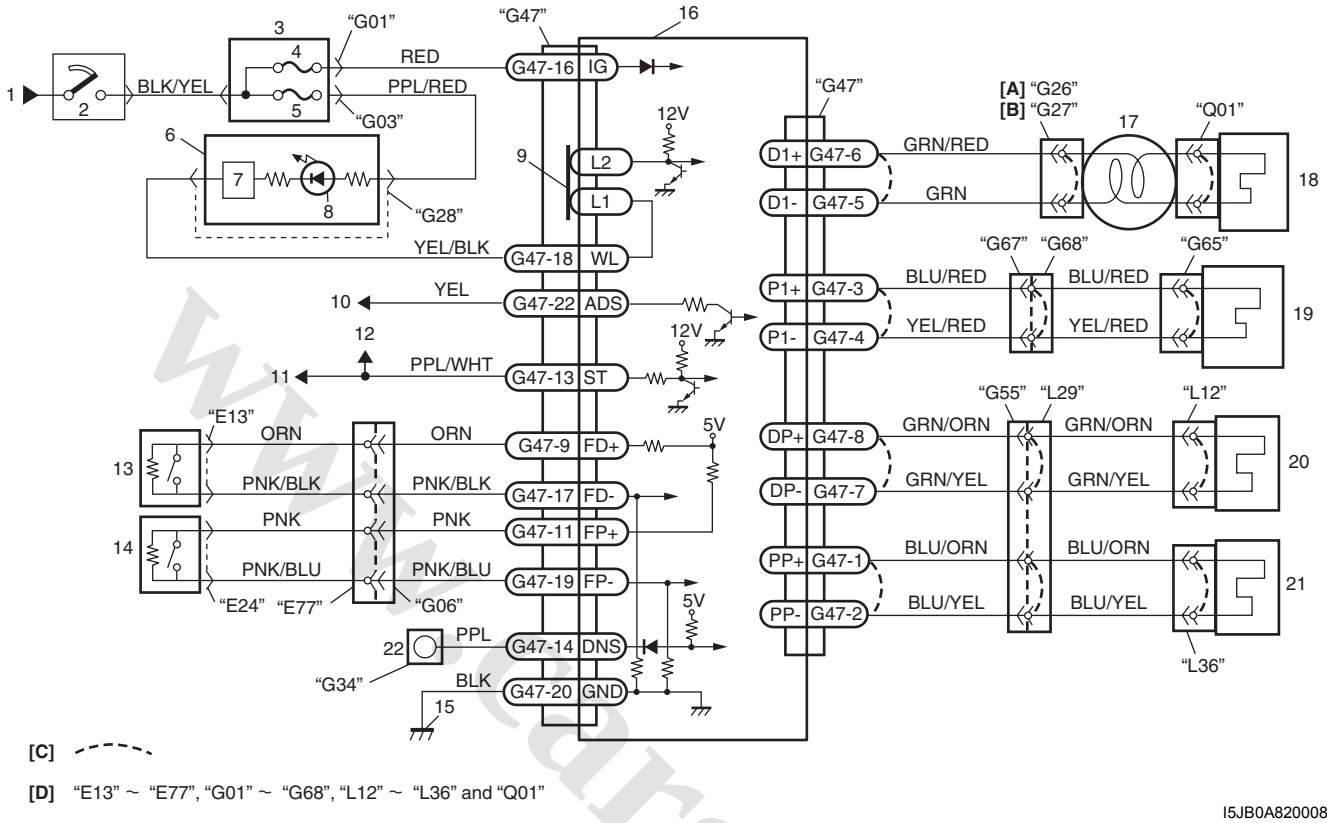


I5JB0A820008-01

| | | |
|---|---|---|
| [A]: For vehicle without cruise control system | 6. Combination meter | 15. Ground for air bag system |
| [B]: For vehicle with cruise control system | 7. Lamp driver | 16. SDM |
| [C]: Shorting bar | 8. "AIR BAG" warning lamp | 17. Contact coil |
| [D]: Connector | 9. Connection detection pin | 18. Driver air bag (inflator) module |
| 1. To battery | 10. To BCM | 19. Passenger air bag (inflator) module |
| 2. Ignition switch | 11. To data link connector (DLC) | 20. Driver seat belt pretensioner |
| 3. Junction block assembly | 12. To ECM, TCM, BCM, ABS hydraulic unit / control module assembly and 4WD control module | 21. Passenger seat belt pretensioner |
| 4. "A/B" fuse | 13. Driver forward-sensor | 22. "AIR BAG" monitor coupler (if equipped) |
| 5. "METER" fuse | 14. Passenger forward-sensor | |

www.cargeek.ir

www.CarGeek.ir

**Terminal arrangement of SDM (viewed from harness side)**

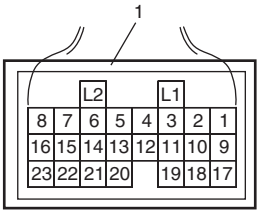


I5JB0A820009-01

1. SDM connector “G47”

**Connector “G47” (SDM connector)**

| Terminal | Terminal symbol | Circuit | Terminal | Terminal symbol | Circuit |
|---|---|---|---|---|---|
| G47-1 | PP+ | Passenger seat belt pretensioner (+) | G47-13 | ST | DLC |
| G47-2 | PP– | Passenger seat belt pretensioner (–) | G47-14 | DNS | Diagnosis switch |
| G47-3 | P1+ | Passenger air bag (+) | G47-15 | — | — |
| G47-4 | P1– | Passenger air bag (–) | G47-16 | IG | Ignition switch (power source) |
| G47-5 | D1– | Driver air bag (–) | G47-17 | FD– | Driver forward-sensor (–) |
| G47-6 | D1+ | Driver air bag (+) | G47-18 | WL | “AIR BAG” warning lamp |
| G47-7 | DP– | Driver seat belt pretensioner (–) | G47-19 | FP– | Passenger forward-sensor (–) |
| G47-8 | DP+ | Driver seat belt pretensioner (+) | G47-20 | GND | Ground |
| G47-9 | FD+ | Driver forward-sensor (+) | G47-21 | — | — |
| G47-10 | — | — | G47-22 | ADS | Air bag deployed signal for BCM |
| G47-11 | FP+ | Passenger forward-sensor (+) | G47-23 | — | — |
| G47-12 | — | — | | | |

www.cargeek.ir

www.CarGeek.ir


## Air bag system with side-air bag and curtain-air bag

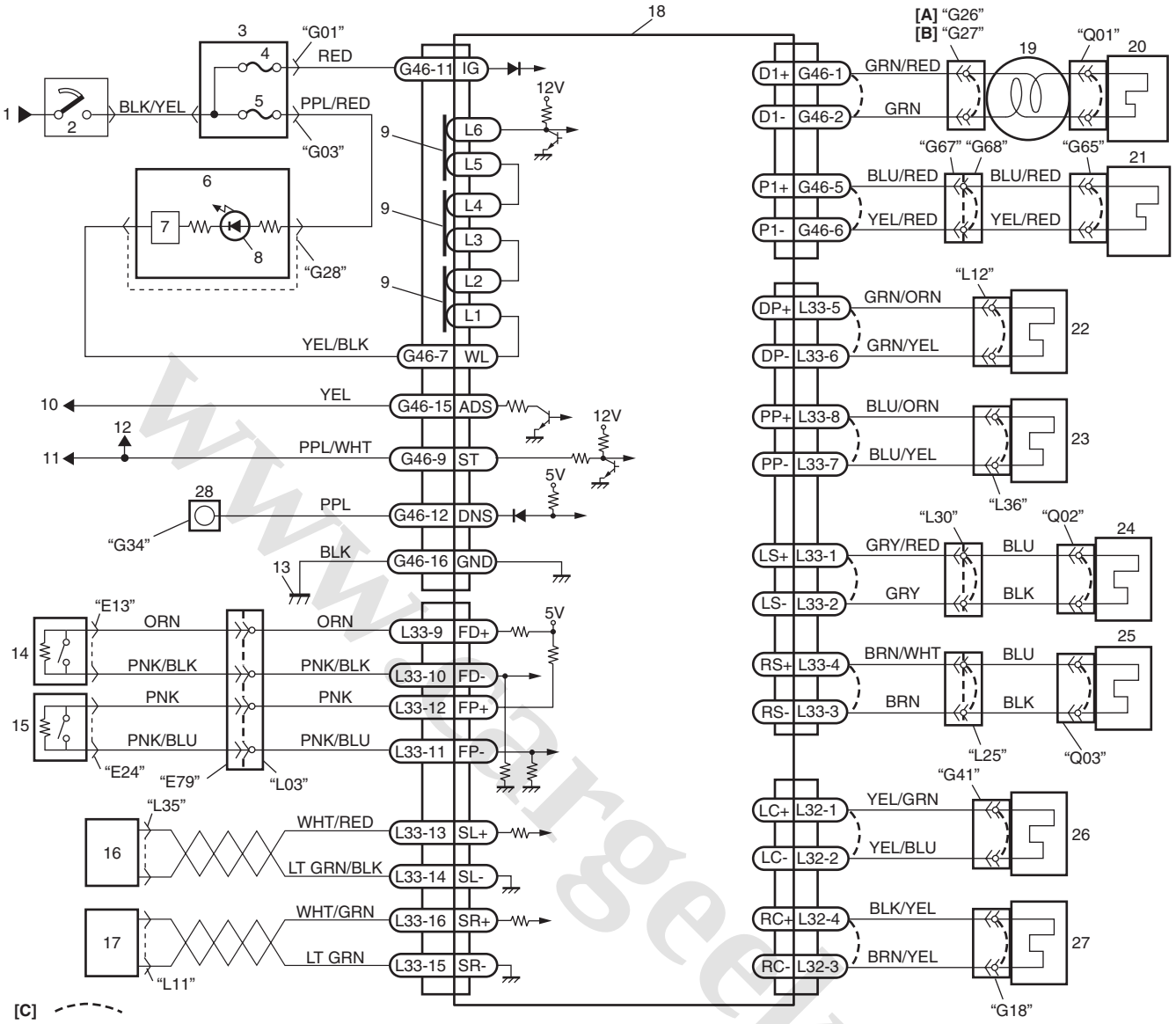


**[D]** "E13" ~ "E79", "G01" ~ "G68", "L12" ~ "L36" and "Q01" ~ "Q03"

I5JB0A820010-01

| | | |
|---|---|---|
| [A]: For vehicle without cruise control system | 8. "AIR BAG" warning lamp | 19. Contact coil |
| [B]: For vehicle with cruise control system | 9. Connection detection pin | 20. Driver air bag (inflator) module |
| [C]: Shorting bar | 10. To BCM | 21. Passenger air bag (inflator) module |
| [D]: Connector | 11. To data link connector (DLC) | 22. Driver seat belt pretensioner |
| 1. To battery | 12. To ECM, TCM, BCM, ABS hydraulic unit / control module assembly and 4WD control module | 23. Passenger seat belt pretensioner |
| 2. Ignition switch | 13. Ground for air bag system | 24. Left side-air bag (inflator) module |
| 3. Junction block assembly | 14. Driver forward-sensor | 25. Right side-air bag (inflator) module |
| 4. "A/B" fuse | 15. Passenger forward-sensor | 26. Left side curtain-air bag (inflator) module |
| 5. "METER" fuse | 16. Left side-sensor (LH steering vehicle) | 27. Right side curtain-air bag (inflator) module |
| 6. Combination meter | 17. Right side-sensor (LH steering vehicle) | 28. "AIR BAG" monitor coupler (if equipped) |
| 7. Lamp driver | 18. SDM | |

www.cargeek.ir

www.CarGeek.ir

**Terminal arrangement of SDM (viewed from harness side)**

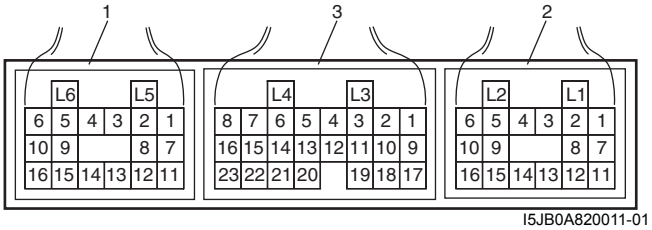


| | |
|---|---|
| 1. SDM connector “G46” | 3. SDM connector “L33” |
| 2. SDM connector “L32” | |

**Connector “G46” (SDM connector)**

| Terminal | Terminal symbol | Circuit | Terminal | Terminal symbol | Circuit |
|---|---|---|---|---|---|
| G46-1 | D1+ | Driver air bag (–) | G46-9 | ST | DLC |
| G46-2 | D1– | Driver air bag (+) | G46-10 | — | — |
| G46-3 | — | — | G46-11 | IG | Ignition switch (power source) |
| G47-4 | — | — | G46-12 | DNS | Diagnosis switch |
| G46-5 | P1+ | Passenger air bag (+) | G46-13 | — | — |
| G46-6 | P1– | Passenger air bag (–) | G46-14 | — | — |
| G46-7 | WL | “AIR BAG” warning lamp | G46-15 | ADS | Air bag deployed signal for BCM |
| G46-8 | — | — | G46-16 | GND | Ground |

**Connector “L32” (SDM connector)**

| Terminal | Terminal symbol | Circuit | Terminal | Terminal symbol | Circuit |
|---|---|---|---|---|---|
| L32-1 | LC+ | Left side curtain-air bag (+) | L32-9 | — | — |
| L32-2 | LC– | Left side curtain-air bag (–) | L32-10 | — | — |
| L32-3 | RC– | Right side curtain-air bag (–) | L32-11 | — | — |
| L32-4 | RC+ | Right side curtain-air bag (+) | L32-12 | — | — |
| L32-5 | — | — | L32-13 | — | — |
| L32-6 | — | — | L32-14 | — | — |
| L32-7 | — | — | L32-15 | — | — |
| L32-8 | — | — | L32-16 | — | — |

**Connector “L33” (SDM connector)**

| Terminal | Terminal symbol | Circuit | Terminal | Terminal symbol | Circuit |
|---|---|---|---|---|---|
| L33-1 | LS+ | Left side-air bag (+) | L33-13 | SL+ | Left side-sensor (+) |
| L33-2 | LS– | Left side-air bag (–) | L33-14 | SL– | Left side-sensor (–) |
| L33-3 | RS– | Right side-air bag (–) | L33-15 | SR– | Right side -sensor (–) |
| L33-4 | RS+ | Right side-air bag (+) | L33-16 | SR+ | Right side -sensor (+) |
| L33-5 | DP+ | Driver seat belt pretensioner (+) | L33-17 | — | — |
| L33-6 | DP– | Driver seat belt pretensioner (–) | L33-18 | — | — |
| L33-7 | PP– | Passenger seat belt pretensioner (–) | L33-19 | — | — |
| L33-8 | PP+ | Passenger seat belt pretensioner (+) | L33-20 | — | — |
| L33-9 | FD+ | Driver forward-sensor (+) | L33-21 | — | — |
| L33-10 | FD– | Driver forward-sensor (–) | L33-22 | — | — |
| L33-11 | FP– | Passenger forward-sensor (–) | L33-23 | — | — |
| L33-12 | FP+ | Passenger forward-sensor (+) | | | |

www.cargeek.ir

www.CarGeek.ir


# Component Location

## Air Bag System Components, Wiring and Connectors Location

S5JB0A8203001

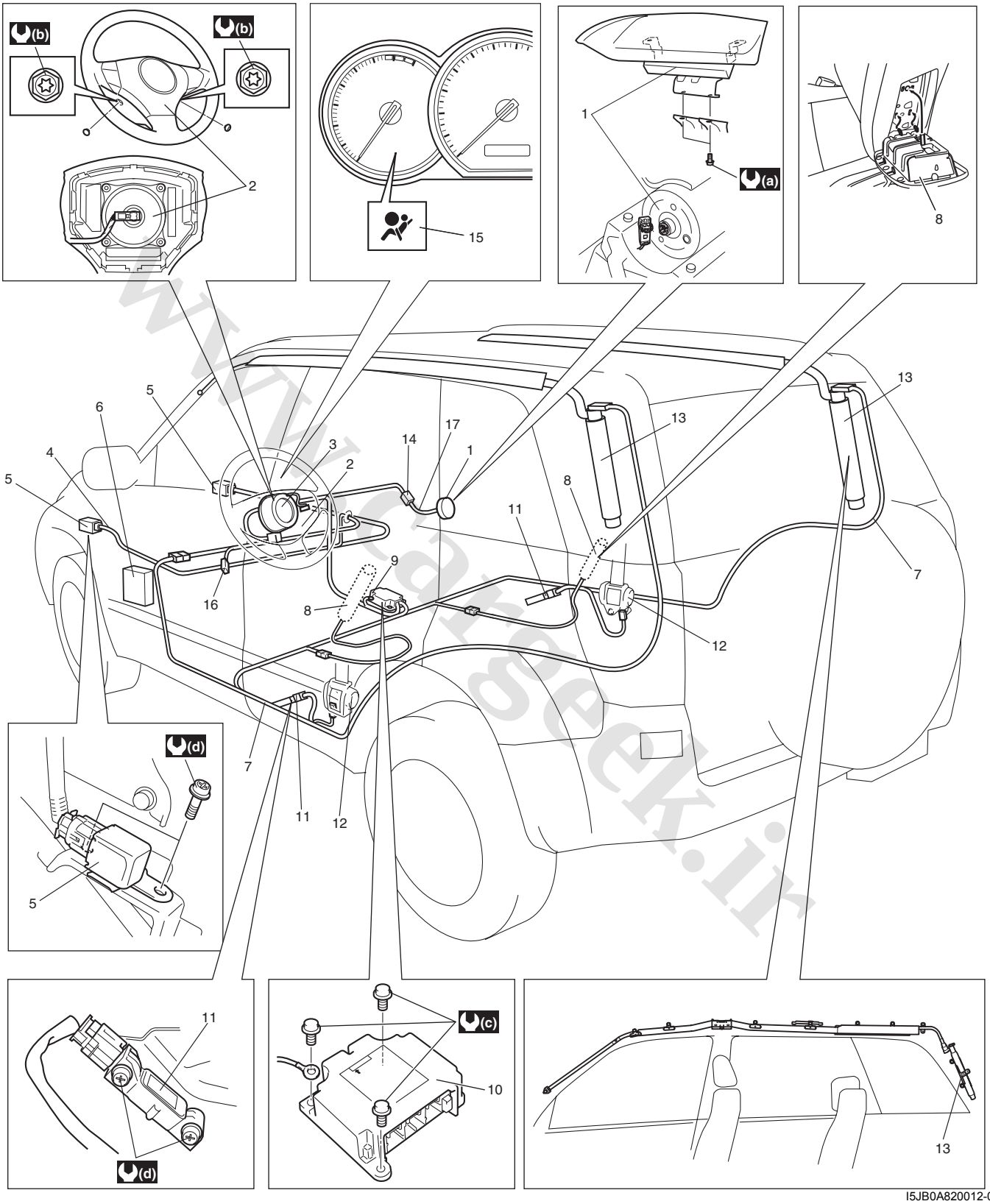


I5JB0A820012-02

| | | |
|---|---|---|
| 1. Passenger air bag (inflator) module | 8. Side-air bag (inflator) module (if equipped) | 15. “AIR BAG” warning lamp |
| 2. Driver air bag (inflator) module | 9. Ground for air bag system | 16. “AIR BAG” monitor coupler (if equipped) |
| 3. Contact coil assembly | 10. SDM | 17. Passenger air bag harness |
| 4. Air bag harness in main harness | 11. side-sensor (if equipped) | (a) : 23 N·m (2.3 kgf-m, 16.5 lb-ft) |

www.cargeek.ir

www.CarGeek.ir

| | | |
|---|---|---|
| 5. Forward-sensor | 12. Seat belt pretensioner | (b) : 9 N·m (0.9 kgf-m, 6.5 lb-ft) |
| 6. "A/B" fuse in junction block assembly | 13. Side curtain-air bag (inflator) module (if equipped) | (c) : 6 N·m (0.6 kgf-m, 4.5 lb-ft) |
| 7. Air bag harness in floor harness | 14. Air bag harness in instrument panel harness | (d) : 11 N·m (1.1 kgf-m, 8.0 lb-ft) |

# Diagnostic Information and Procedures

## Air Bag Diagnostic System Check

S5JB0A8204001

**⚠ WARNING**

**To avoid deployment when troubleshooting the air bag system, do not use electrical test equipment such as a battery powered or AC powered voltmeter, ohmmeter, etc., or any type of electrical equipment other than that specified in this manual. Do not use a non-powered probe type tester.**
**Instructions in this manual must be followed carefully, otherwise personal injury may result.**

**⚠ CAUTION**

**The order in which DTCs are diagnosed is very important. Failure to diagnose the DTCs in the order specified may result in extended diagnostic time, incorrect diagnosis and incorrect parts replacement.**

The diagnostic procedures used are designed to find and repair air bag system malfunctions.

To get the best results, it is important to use the diagnostic flow and follow the sequence in the following.

1) Perform the "Air Bag Diagnostic System Check Flow: ".
(The "Air Bag Diagnostic System Check Flow: " must be the starting point of any air bag system diagnosis. The "Air Bag Diagnostic System Check Flow: " checks for proper "AIR BAG" warning lamp operation through "AIR BAG" warning lamp and whether air bag DTCs exist.)
2) Refer to the proper diagnostic flow as directed by the "Air Bag Diagnostic System Check Flow: ".
(The "Air Bag Diagnostic System Check Flow: " will lead you to the correct flow to diagnose any air bag system malfunctions. Bypassing these procedures may result in extended diagnostic time, incorrect diagnosis and incorrect parts replacement.)
3) Repeat the "Air Bag Diagnostic System Check Flow: " after any repair or diagnostic procedures have been performed.
(Performing the "Air Bag Diagnostic System Check Flow: " after all repair or diagnostic procedures will ensure that the repair has been made correctly and that no other malfunctions exist.)

## Air Bag Diagnostic System Check Flow

S5JB0A8204002

**⚠ CAUTION**

- **Be sure to perform "Air Bag Diagnostic System Check: " before starting diagnosis according to each flow.**
- **When measurement of resistance or voltage is required in the flow, use a tester along with a correct terminal adapter from special tool (Connector test adapter kit).**
- **When a check for proper connection is required, refer to "Inspection of Intermittent and Poor Connections: ".**
- **If an open circuit in the air bag wire harness damaged, connector or terminal is found, replace the wire harness, connectors and terminals as an assembly.**

**Flow test description**
**Step 1:** Check "AIR BAG" warning lamp and circuits.
**Step 2:** Check that "AIR BAG" warning lamp lights.
**Step 3:** Check diagnosis switch circuit.
**Step 4:** Check that "AIR BAG" warning lamp flashes 6 times after ignition switch is turned ON.
**Step 6:** Check that history code(s) is in SDM memory. (using SUZUKI scan tool)
**Step 7:** Check that history code(s) is in SDM memory. (using monitor coupler)
**Step 9:** Check that current code is in SDM memory. (using SUZUKI scan tool)
**Step 10:** Check that current code is in SDM memory. (using monitor coupler)

www.cargeek.ir

www.CarGeek.ir


| Step | Action | Yes | No |
|---|---|---|---|
| 1 | 1) Make sure that battery voltage is about 11 V or higher.<br>2) Note “AIR BAG” warning lamp as ignition switch is turned ON.<br>*Does “AIR BAG” warning lamp come ON when ignition switch is turned ON?* | Go to Step 2. | Proceed to ““AIR BAG” Warning Lamp Does Not Come ON: ”. |
| 2 | *Does “AIR BAG” warning lamp come ON steady?* | Proceed to ““AIR BAG” Warning Lamp Comes ON Steady: ”. | Go to Step 3. |
| 3 | *Does “AIR BAG” warning lamp keep flashing (indicating DTC) when ignition switch is ON?* | Proceed to ““AIR BAG” Warning Lamp Flashes: ”. | Go to Step 4. |
| 4 | *Does “AIR BAG” warning lamp turn OFF, after flashing 6 times?* | “AIR BAG” warning lamp circuit is in good condition. Go to Step 5. | “AIR BAG” warning lamp circuit is in good condition. Go to Step 8. |
| 5 | *Do you have SUZUKI scan tool?* | Go to step 6. | Go to step 7. |
| 6 | Check DTC referring to “DTC Check: ” using SUZUKI scan tool.<br>*Is “NO CODES” displayed on SUZUKI scan tool?* | Air bag system is in good condition. | An intermittent trouble has occurred at some place.<br>Check the connector harness, etc. related to the sensed DTC.<br>Refer to “Inspection of Intermittent and Poor Connections: ”.<br>Then clear DTC (referring to “DTC Clearance: ”.) and repeat this flow. |
| 7 | 1) Check DTC referring to “DTC Check: ” using monitor connector (if equipped).<br>*Is flashing pattern DTC No. 0000 indicated on “AIR BAG” warning lamp?* | Air bag system is in good condition. | An intermittent trouble has occurred at some place.<br>Check the connector harness, etc. related to the sensed DTC.<br>Refer to “Inspection of Intermittent and Poor Connections: ”.<br>Then clear DTC (referring to “DTC Clearance: ”.) and repeat this flow. |
| 8 | *Do you have SUZUKI scan tool?* | Go to step 9. | Go to step 10. |
| 9 | Check DTC referring to “DTC Check: ” using SUZUKI scan tool.<br>*Is “NO CODES” displayed on SUZUKI scan tool?* | Substitute a known-good SDM and recheck. | Check and repair according to flow corresponding to that DTC. |
| 10 | Check DTC referring to “DTC Check: ” using monitor connector (if equipped).<br>*Is flashing pattern DTC No. 0000 indicated on “AIR BAG” warning lamp?* | Substitute a known-good SDM and recheck. | Check and repair according to flow corresponding to that DTC. |

www.cargeek.ir

www.CarGeek.ir

## DTC Table

S5JB0A8204003

### SDM DTC

| DTC | "AIR BAG" warning lamp flashing pattern | | Diagnosis | | |
|---|---|---|---|---|---|
| | No. | Mode | | | |
| — | 0000 | MCODEB0000-0-01 | Normal | | — |
| ☞ B1013 | 1013 | MCODEB1013-0-01 | SDM | SDM fault | Diagnose trouble according to diagnostic flow corresponding to each code No. |
| ☞ B1016 | 1016 | MCODEB1016-0-01 | Power source voltage | Too high | |
| ☞ B1017 | 1017 | MCODEB1017-0-01 | | Too Low | |
| ☞ B1021 | 1021 | MCODEB1021-0-01 | SDM | Air bag module exploded | |
| ☞ B1031 | 1031 | MCODEB1031-0-01 | Driver air bag circuit | Resistance high | |
| ☞ B1032 | 1032 | MCODEB1032-0-01 | | Resistance low | |
| ☞ B1033 | 1033 | MCODEB1033-0-01 | | Short to ground | |
| ☞ B1034 | 1034 | MCODEB1034-0-01 | | Short to power circuit | |
| ☞ B1041 | 1041 | MCODEB1041-0-01 | Passenger air bag circuit | Resistance high | |
| ☞ B1042 | 1042 | MCODEB1042-0-01 | | Resistance low | |
| ☞ B1043 | 1043 | MCODEB1043-0-01 | | Short to ground | |
| ☞ B1044 | 1044 | MCODEB1044-0-01 | | Short to power circuit | |
| ☞ B1051 | 1051 | MCODEB1051-0-01 | Driver pretensioner circuit | Resistance high | |
| ☞ B1052 | 1052 | MCODEB1052-0-01 | | Resistance low | |
| ☞ B1053 | 1053 | MCODEB1053-0-01 | | Short to ground | |
| ☞ B1054 | 1054 | MCODEB1054-0-01 | | Short to power circuit | |
| ☞ B1055 | 1055 | MCODEB1055-0-01 | Passenger pretensioner circuit | Resistance high | |
| ☞ B1056 | 1056 | MCODEB1056-0-01 | | Resistance low | |
| ☞ B1057 | 1057 | MCODEB1057-0-01 | | Short to ground | |
| ☞ B1058 | 1058 | MCODEB1058-0-01 | | Short to power circuit | |
| ☞ B1073 | 1073 | MCODEB1073-0-01 | Driver forward-sensor circuit | Short to ground | |
| ☞ B1074 | 1074 | MCODEB1074-0-01 | | Short to power circuit or open | |
| ☞ B1077 | 1077 | MCODEB1077-0-01 | Passenger forward-sensor circuit | Short to ground | |
| ☞ B1078 | 1078 | MCODEB1078-0-01 | | Short to power circuit or open | |
| ☞ B1085 | 1085 | MCODEB1085-0-01 | Side-sensor | Wrong assembly | |

www.cargeek.ir

| DTC | "AIR BAG" warning lamp flashing pattern | | Diagnosis | | |
|---|---|---|---|---|---|
| | No. | Mode | | | |
| ☞ B1086 | 1086 | MCODEB1086-0-01 | Left side-sensor | Performance problem | Diagnose trouble according to diagnostic flow corresponding to each code No. |
| ☞ B1087 | 1087 | MCODEB1087-0-01 | | Communication error | |
| ☞ B1096 | 1096 | MCODEB1096-0-01 | Right side-sensor | Performance problem | |
| ☞ B1097 | 1097 | MCODEB1097-0-01 | | Communication error | |
| ☞ B1321 | 1321 | MCODEB1321-0-01 | Left side-air bag | Resistance high | |
| ☞ B1322 | 1322 | MCODEB1322-0-01 | | Resistance low | |
| ☞ B1323 | 1323 | MCODEB1323-0-01 | | Short to ground | |
| ☞ B1324 | 1324 | MCODEB1324-0-01 | | Short to power circuit | |
| ☞ B1325 | 1325 | MCODEB1325-0-01 | Right side-air bag | Resistance high | |
| ☞ B1326 | 1326 | MCODEB1326-0-01 | | Resistance low | |
| ☞ B1327 | 1327 | MCODEB1327-0-01 | | Short to ground | |
| ☞ B1328 | 1328 | MCODEB1328-0-01 | | Short to power circuit | |
| ☞ B1331 | 1331 | MCODEB1331-0-01 | Left side curtain-air bag circuit | Resistance high | |
| ☞ B1332 | 1332 | MCODEB1332-0-01 | | Resistance low | |
| ☞ B1333 | 1333 | MCODEB1333-0-01 | | Short to ground | |
| ☞ B1334 | 1334 | MCODEB1334-0-01 | | Short to power circuit | |
| ☞ B1335 | 1335 | MCODEB1335-0-01 | Right side curtain-air bag circuit | Resistance high | |
| ☞ B1336 | 1336 | MCODEB1336-0-01 | | Resistance low | |
| ☞ B1337 | 1337 | MCODEB1337-0-01 | | Short to ground | |
| ☞ B1338 | 1338 | MCODEB1338-0-01 | | Short to power circuit | |

www.cargeek.ir

www.CarGeek.ir

## DTC Check

S5JB0A8204004

### Using SUZUKI Scan Tool

1) Turn ignition switch to OFF position.
2) Connect SUZUKI scan tool to data link connector (DLC) located on underside of instrument panel at driver's seat side.

   **Special tool**
   **(A): SUZUKI scan tool**

3) Turn ignition switch to ON position.
4) Read DTC according to instructions displayed on SUZUKI scan tool and print it or write it down. Refer to SUZUKI scan tool operator's manual for further details.
   If communication between scan tool and SDM is not possible, check if scan tool is communicable by connecting it to SDM in another vehicle. If communication is possible in this case, scan tool is in good condition. Then check data link connector and serial data line (circuit) in the vehicle with which communication was not possible.
5) After completing the check, turn ignition switch to OFF position and disconnect SUZUKI scan tool from data link connector (DLC) (1).

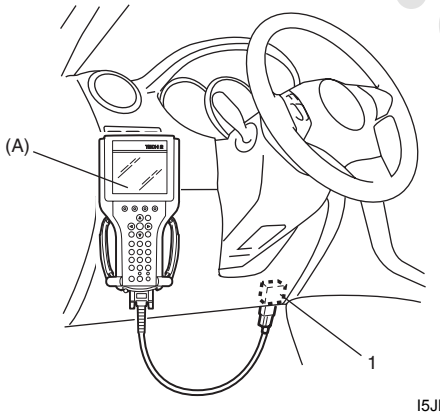


I5JB0A820013-01

### Using Monitor Connector (If Equipped)

1) Using service wire (3), ground diagnosis switch terminal (2) in "AIR BAG" monitor coupler (1).
2) Read DTC from flashing pattern of malfunction indicator lamp ("AIR BAG" warning lamp) Referring to "DTC Table: ".
   If lamp does not indicate DTC, proceed to ""AIR BAG" Warning Lamp Cannot Indicate Flashing Pattern of DTC (If Equipped with "AIR BAG" Monitor Coupler): ".
3) After completing the check, turn ignition switch to OFF position and disconnect service wire from "AIR BAG" monitor coupler.

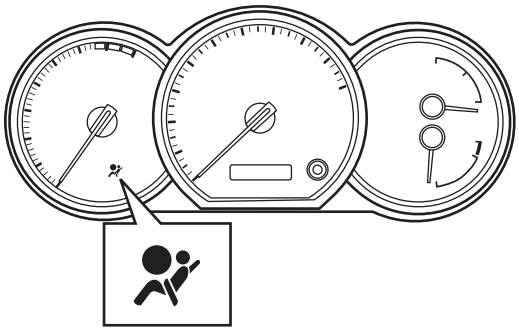

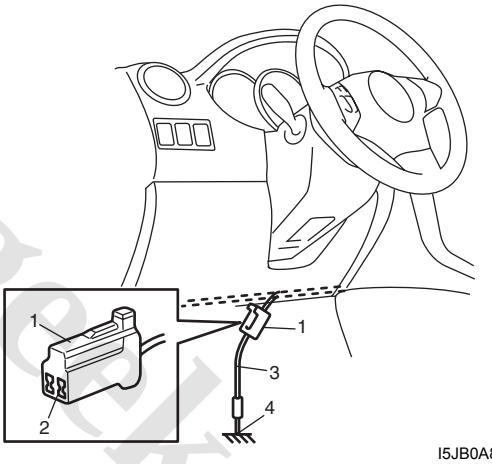


I5JB0A820014-02

| | |
|---|---|
| 4. Body ground | |

**Example: When driver air bag initiator circuit resistance high (DTC B1031) is set**

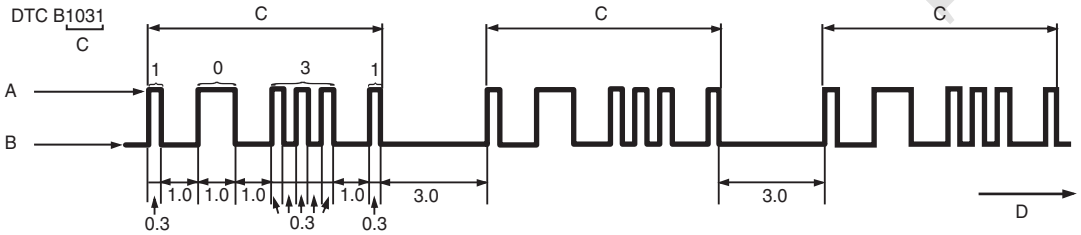


I5JB0A820015-01

| | |
|---|---|
| A: "AIR BAG" warning lamp is turned ON | C: Code No.1031 |
| B: "AIR BAG" warning lamp is turned OFF | D: Time (sec.) |

www.cargeek.ir

www.CarGeek.ir


## DTC Clearance

S5JB0A8204005

### Using SUZUKI Scan Tool

1) Turn ignition switch to OFF position.
2) Connect SUZUKI scan tool to data link connector (DLC) (1) in the same manner as when making this connection for DTC check.

**Special tool**
**(A): SUZUKI scan tool**

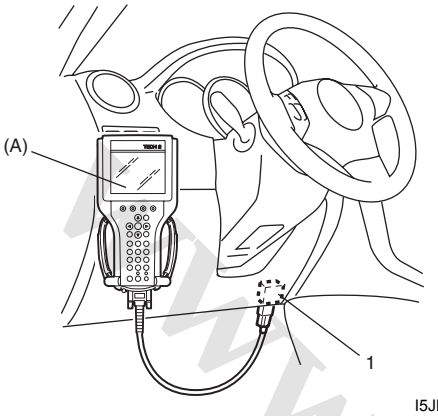


I5JB0A820013-01

3) Turn ignition switch to ON position.
4) Erase DTC according to instructions displayed on SUZUKI scan tool. Refer to SUZUKI scan tool operator's manual for further details.
5) After completing the clearance, perform "DTC Check: " and confirm that normal DTC (NO CODES) is displayed and not malfunction DTC.
6) Turn ignition switch to OFF position and disconnect SUZUKI scan tool from DLC.

**NOTE**

**If DTC B1013 or B1021 is stored in SDM, it is not possible to clear DTC.**

### Using Monitor Connector (If Equipped)

1) Turn ignition switch to ON position and wait about 6 seconds or more.
2) Using service wire (4), repeat shorting and opening between diagnosis switch terminal (3) on "AIR BAG" monitor coupler (1) and body ground (2) 5 times at about 1 second intervals within 10 seconds.

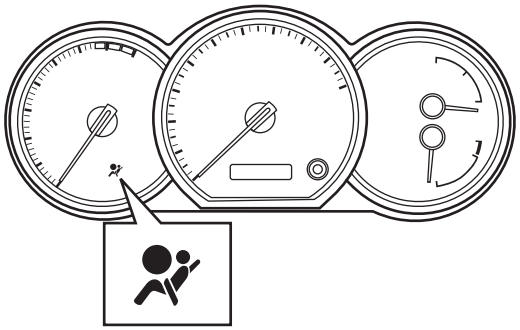

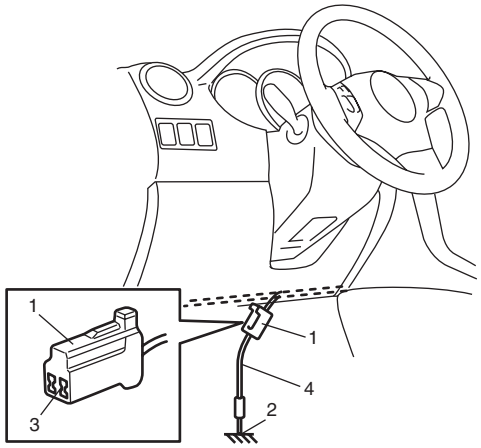


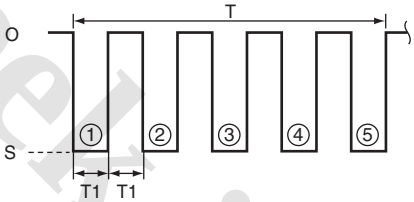


I5JB0A820016-01

| | |
|---|---|
| O: Open | T: Max, 10 seconds |
| S: Short | T1: About 1 sec. |

3) Perform "DTC Check: " and confirm that normal DTC (NO. 0000) is displayed and not malfunction DTC.

**NOTE**

**If DTC B1013 or B1021 is stored in SDM, it is not possible to clear all DTC.**

www.cargeek.ir

www.CarGeek.ir

## Scan Tool Data

S5JB0A8204006

### Data list of SDM

| Scan Tool Data | Normal Condition / Reference Value |
|---|---|
| Battery volt | 10 – 14 V |
| Back up volt | 27.0 – 33.0 V |
| System ID | 4ch or 8ch |
| Driv A/B Ini Res | 2.1 – 3.8 ohm |
| Pass A/B Ini Res | 1.8 – 2.8 ohm |
| Driv Pret Ini Res | 1.8 – 2.9 ohm |
| Pass Pret Ini Res | 1.8 – 2.9 ohm |
| LH Side Ini Res | 1.8 – 2.6 ohm |
| RH Side Ini Res | 1.8 – 2.6 ohm |
| LH Curtain Ini Res | 1.8 – 2.8 ohm |
| RH Curtain Ini Res | 1.8 – 2.8 ohm |

### Scan Tool Data Definition

**Back Up Volt (V):** This parameter indicates the capacity of the backup condenser installed to maintain the ignition current (as much as possible) even when the power supply to SDM that ignites the inflator is shut off.

**Battery Volt (V):** Battery voltage is an analog input signal read by SDM.

**System ID (4ch/8ch):** This parameter indicates the number of initiator circuits.

**Driv A/B Ini Res (Driver air bag initiator resistance) (ohm):** This parameter indicates the resistance of the driver air bag initiator circuit.

**Pass A/B Ini Res (Passenger air bag initiator resistance) (ohm):** This parameter indicates the resistance of the passenger air bag initiator circuit.

**Driv Pret Ini Res (Driver pretensioner initiator resistance) (ohm):** This parameter indicates the resistance of the driver seat belt pretensioner initiator circuit.

**Pass Pret Ini Res (Passenger pretensioner initiator resistance) (ohm):** This parameter indicates the resistance of the passenger seat belt pretensioner initiator circuit.

**LH Side Ini Res (Left side-air bag initiator resistance) (ohm):** This parameter indicates the resistance of the left side-air bag initiator circuit.

**RH Side Ini Res (Right side-air bag initiator resistance) (ohm):** This parameter indicates the resistance of the right side-air bag initiator circuit.

**LH Curtain Ini Res (Left side curtain-air bag initiator resistance) (ohm):** This parameter indicates the resistance of the left side curtain-air bag initiator circuit.

**RH Curtain Ini Res (Right side curtain-air bag initiator resistance) (ohm):** This parameter indicates the resistance of the right side curtain-air bag initiator circuit.

www.cargeek.ir
www.cargeek.ir

www.CarGeek.ir


## “AIR BAG” Warning Lamp Comes ON Steady

S5JB0A8204007

### Wiring Diagram

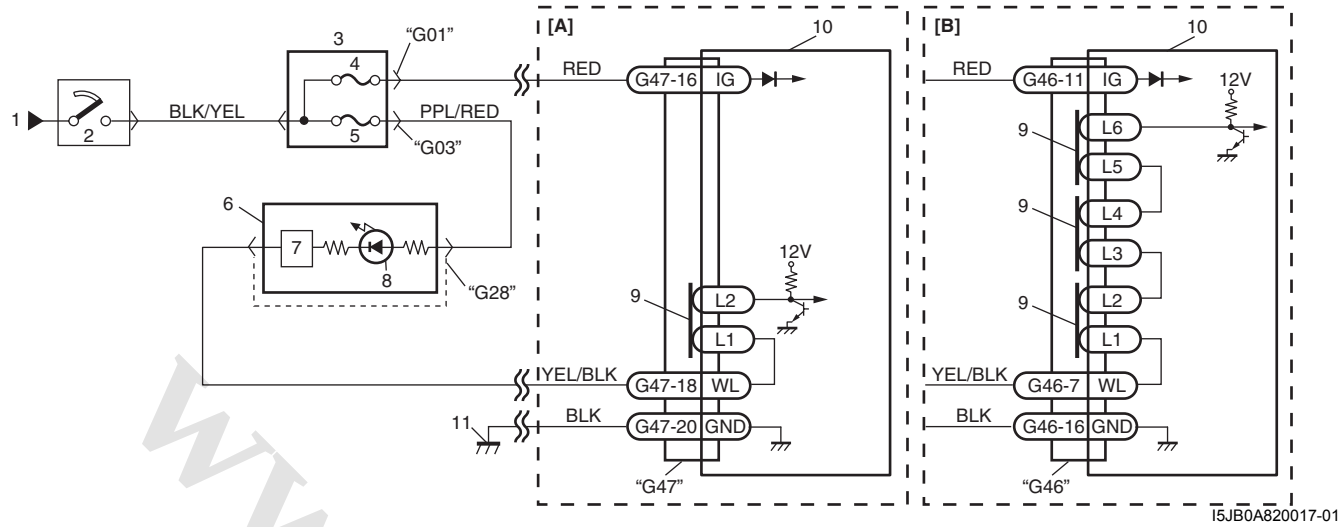


| | | | |
|---|---|---|---|
| [A]: Without side-air bag and curtain-air bag | 3. Junction block assembly | 7. Lamp driver | 11. Ground for air bag system |
| [B]: With side-air bag and curtain-air bag | 4. “A/B” fuse | 8. “AIR BAG” warning lamp | |
| 1. From main fuse | 5. “METER” fuse | 9. Connection detection pin | |
| 2. Ignition switch | 6. Combination meter | 10. SDM | |

### ⚠ CAUTION

**Be sure to observe instructions under CAUTION in “Air Bag Diagnostic System Check Flow”.**

www.cargeek.ir

www.CarGeek.ir

**Flow Test Description**

**Step 1:** Check for “AIR BAG” fuse blown.
**Step 2:** Check for loose connection between junction block assembly connector and junction block assembly.
**Step 3:** Check for loose connection between SDM connector and SDM.
**Step 4:** Check for SDM power supply circuit.
**Step 5:** Check for open or short circuit between “AIR BAG” warning lamp circuit and ground.

**Troubleshooting**

| Step | Action | Yes | No |
|---|---|---|---|
| 1 | 1) Turn ignition switch OFF.<br>2) Remove and inspect “A/B” fuse.<br>*Is fuse good?* | Go to Step 2. | “RED” wire short to ground.<br>After repair, replace “A/B” fuse. |
| 2 | 1) Check for loose connection of junction block assembly connector “G01”.<br>*Is it connected securely?* | Go to Step 3. | Correct connector “G01” securely. |
| 3 | Check for loose connection of SDM connector “G47” or “G46”.<br>*Is it connected securely?* | Go to Step 4. | Correct connector “G47” or “G46” securely. |
| 4 | 1) Disconnect SDM connector “G47” or “G46”.<br>2) Check proper connection to SDM at terminal “G47-16” or “G46-11”.<br>3) If OK, then check voltage between “G47-16” terminal [A] or “G46-11” terminal [B] of SDM connector and body ground with ignition switch ON.<br>**Special tool**<br>**(A): 09932–76010**<br> 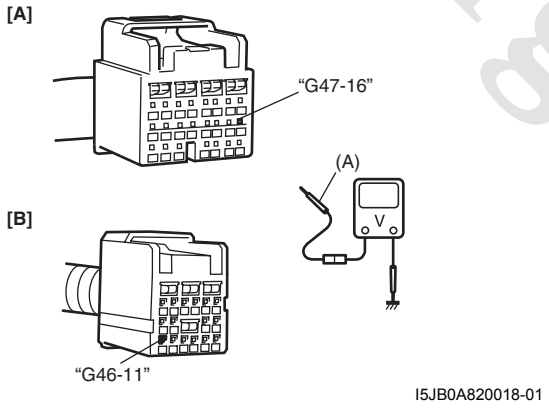 <br><br>*Is it 8 V or more?* | Go to Step 5. | “RED” wire (between “A/B” fuse and SDM connector) open or “BLK/YEL” wire (between ignition switch and “A/B” fuse) open or short to ground. |

www.cargeek.ir

www.CarGeek.ir


| Step | Action | Yes | No |
|---|---|---|---|
| 5 | 1) Disconnect combination meter connector “G28” referring to “Combination Meter Removal and Installation: in Section 9C”.<br>2) Check proper connection to combination meter at “YEL/BLK” terminal for “AIR BAG” warning lamp and to SDM at terminal “G47-18” or “G46-7”.<br>3) If OK, then check resistance between “YEL/BLK” wire terminal of combination meter connector “G28” and “G47-18” terminal [A] or “G46-7” terminal [B] of SDM connector.<br>**Special tool**<br>**(A): 09932–76010**<br> 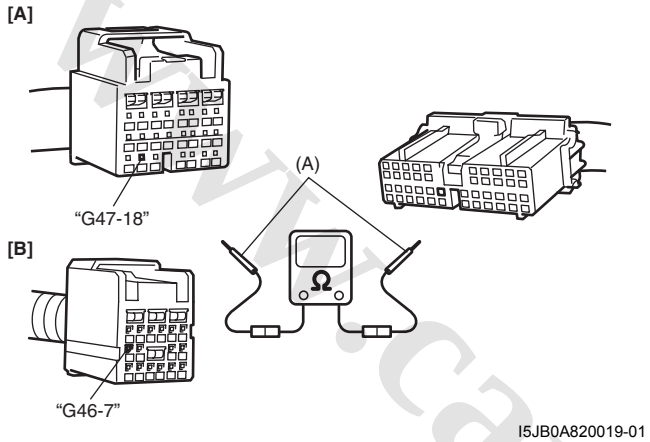 <br><br>*Is resistance 1 Ω or less?* | Substitute a known-good SDM and recheck. If “AIR BAG” warning lamp remain lighting, replace combination meter. | “YEL/BLK” wire (between combination meter and SDM connector) open or short to ground. |

**NOTE**

**Upon completion of inspection and repair work, perform the following items.**

- **Reconnect all air bag system components and ensure all components are properly mounted.**
- **Repeat “Air Bag Diagnostic System Check: ” to confirm that the trouble has been corrected.**

www.cargeek.ir

www.CarGeek.ir

## “AIR BAG” Warning Lamp Does Not Come ON

S5JB0A8204008

### Wiring Diagram

Refer to ““AIR BAG” Warning Lamp Comes ON Steady: ”.

**⚠ CAUTION**

**Be sure to observe instructions under CAUTION in “Air Bag Diagnostic System Check Flow”.**

### Flow Test Description

**Step 1:** Check combination meter power feed circuit.
**Step 2:** Check “AIR BAG” warning lamp circuit.

### Troubleshooting

| Step | Action | Yes | No |
|---|---|---|---|
| 1 | 1) Set parking brake.<br>2) Note combination meter when ignition switch is turned ON.<br>*Does the “BRAKE” indicator (warning lamp) come ON?* | Go to Step 2. | Check and correct the following possible cause. • Open circuit in “BLK/YEL” or “PPL/RED” wire. • Short circuit between “BLK/YEL” or “PPL/RED” and ground. • “METER” fuse blown. |
| 2 | 1) Disconnect SDM connector “G46” or “G47”.<br>2) Note combination meter when ignition switch is turned ON.<br>*Does the “AIR BAG” warning lamp come ON?* | Substitute a known-good SDM and recheck. | “YEL/BLK” circuit shorted to power circuit. If OK, replace combination meter. |

**NOTE**

**Upon completion of inspection and repair work, perform the following items.**

- **Reconnect all air bag system components and ensure all components are properly mounted.**
- **Repeat “Air Bag Diagnostic System Check: ” to confirm that the trouble has been corrected.**

www.cargeek.ir

www.CarGeek.ir


## “AIR BAG” Warning Lamp Flashes

S5JB0A8204009

### Wiring Diagram

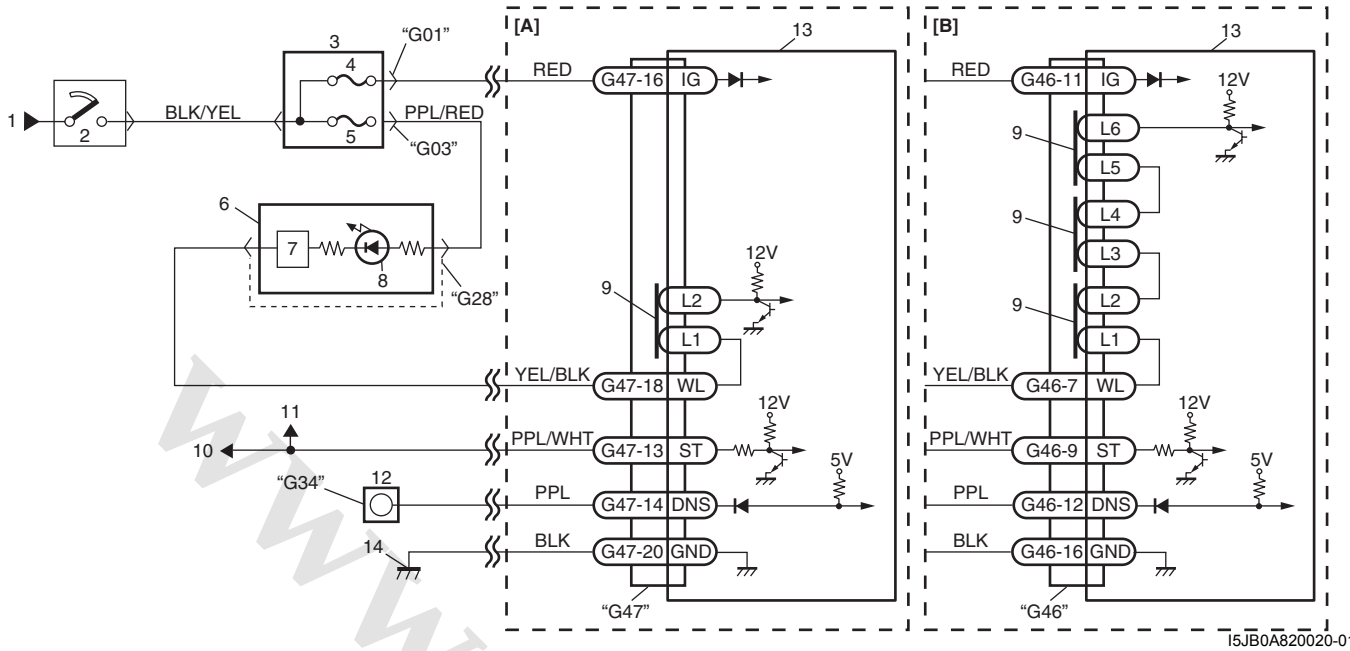


I5JB0A820020-01

| | | | |
|---|---|---|---|
| [A]: Without side-air bag and curtain-air bag | 3. Junction block assembly | 7. Lamp driver | 11. To ECM, TCM, BCM, ABS hydraulic unit / control module assembly and 4WD control module |
| [B]: With side-air bag and curtain-air bag | 4. “A/B” fuse | 8. “AIR BAG” warning lamp | 12. “AIR BAG” monitor coupler (if equipped) |
| 1. From main fuse | 5. “METER” fuse | 9. Connection detection pin | 13. SDM |
| 2. Ignition switch | 6. Combination meter | 10. To DLC | 14. Ground for air bag system |

**⚠ CAUTION**

**Be sure to observe instructions under CAUTION in “Air Bag Diagnostic System Check Flow”.**

### Flow Test Description

**Step 1:** Check that vehicle is equipped with or without “AIR BAG” monitor connector.
**Step 2:** Check “AIR BAG” monitor coupler.
**Step 3, 4:** Check for short circuit between diagnosis switch circuit and ground.

### Troubleshooting

| Step | Action | Yes | No |
|---|---|---|---|
| 1 | *Is vehicle equipped with “AIR BAG” monitor connector?* | Go to Step 2. | Go to Step 3. |
| 2 | Check “AIR BAG” monitor coupler.<br><br>*Is the diagnosis switch terminal in “AIR BAG” monitor coupler connected to body ground with service wire?* | Remove service wire. | Go to Step 3. |
| 3 | 1) With ignition switch OFF, disconnect SDM connector “G47” or “G46”.<br>2) Check “G47-14” or “G46-12” terminal of SDM connector.<br><br>*Is it shorted to ground terminal or harness?* | Clean up terminal or harness. | Substitute a known-good SDM and recheck. |

**NOTE**

**Upon completion of inspection and repair work, perform the following items.**

- **Reconnect all air bag system components and ensure all components are properly mounted.**
- **Repeat “Air Bag Diagnostic System Check: ” to confirm that the trouble has been corrected.**

www.cargeek.ir

www.CarGeek.ir

## “AIR BAG” Warning Lamp Cannot Indicate Flashing Pattern of DTC (If Equipped with “AIR BAG” Monitor Coupler)

S5JB0A8204049

### Wiring Diagram

Refer to ““AIR BAG” Warning Lamp Flashes: ”.

**⚠ CAUTION**

**Be sure to observe instructions under CAUTION in “Air Bag Diagnostic System Check Flow”.**

### Flow Test Description

**Step 1:** Check “AIR BAG” monitor coupler.
**Step 2:** Check for open circuit in air bag diagnosis switch circuit.

### Troubleshooting

| Step | Action | Yes | No |
|---|---|---|---|
| 1 | Inspect connection between diagnostic switch terminal on “AIR BAG” monitor coupler and body ground with service wire.<br><br>*Are they connected securely with service wire?* | Go to Step 2. | Properly connect diagnostic switch terminal on “AIR BAG” monitor coupler and body ground with service wire. |
| 2 | 1) Disconnect SDM connector from SDM.<br>2) Check for proper connection at “PPL” wire (“G47-14” terminal or “G46-12” terminal of SDM connector and “G34-2” terminal of “AIR BAG” monitor coupler (1)) terminals.<br>3) If OK, then measure resistance between “G47-14” terminal [A] or “G46-12” terminal [B] and “G34-2” terminal.<br><br>**Special tool**<br>**(A): 09932–76010**<br><br> 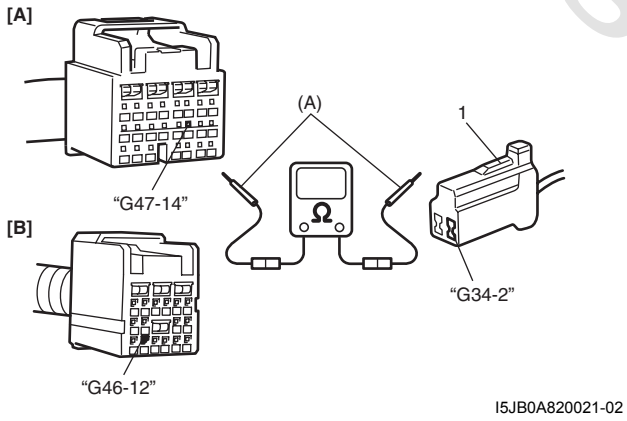 <br><br><br>*Is resistance 1 Ω or more?* | Check “PPL” wire terminals. If OK, repair high resistance or open in “PPL” wire circuit. | Substitute a known good SDM and recheck. |

**NOTE**

**Upon completion of inspection and repair work, perform the following items.**

- **Reconnect all air bag system components and ensure all components are properly mounted.**
- **Repeat “Air Bag Diagnostic System Check: ” to confirm that the trouble has been corrected.**

www.cargeek.ir

www.CarGeek.ir


## DTC B1013: SDM fault

S5JB0A8204010

### DTC Will Set when

An internal SDM fault is detected by SDM.

**NOTE**

**DTC B1013 can never be cleared once it has been set.**

### DTC Troubleshooting

1) Turn ignition switch OFF.
2) Replace SDM.
3) Repeat “Air Bag Diagnostic System Check: ”.

## DTC B1016: Power Source Voltage High

S5JB0A8204012

### Wiring Diagram

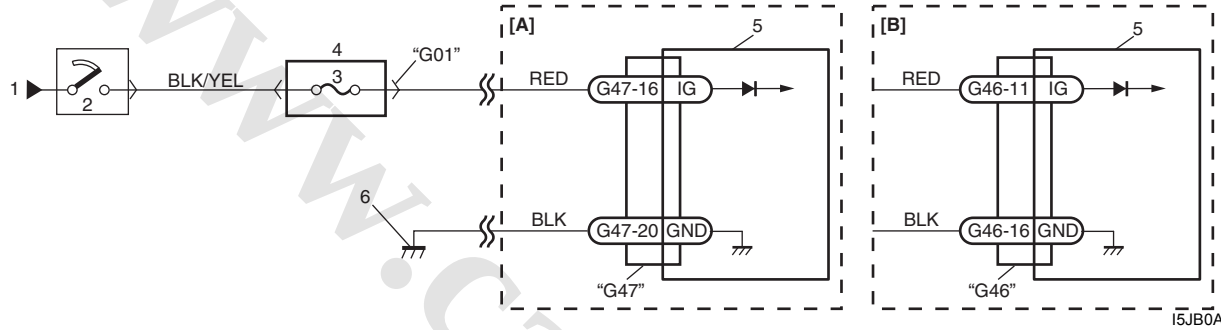


I5JB0A820022-01

| | | | |
|---|---|---|---|
| [A]: Without side-air bag and curtain air bag | 1. From main fuse | 3. “A/B” fuse | 5. SDM |
| [B]: With side-air bag and curtain air bag | 2. Ignition switch | 4. Junction block assembly | 6. Ground for air bag system |

**⚠ CAUTION**

**Be sure to observe instructions under CAUTION in “Air Bag Diagnostic System Check Flow”.**

### DTC Will Set when

The power source voltage to SDM is above specified value for specified time.

### Flow Test Description

**Step 1:** Check if voltage applied to SDM is within normal range.
**Step 2:** Check if DTC B1016 still exists.

www.cargeek.ir

www.CarGeek.ir

**DTC Troubleshooting**

| Step | Action | Yes | No |
|---|---|---|---|
| 1 | 1) With ignition switch OFF, disconnect SDM connector.<br>2) Check proper connection to SDM at “G47-16” or “G46-11” terminal.<br>3) If OK, turn ignition switch ON and then check voltage between “G47-16” [A] or “G46-11” [B] terminal on SDM connector and body ground.<br>**Special tool**<br>**(A): 09932–76010**<br> 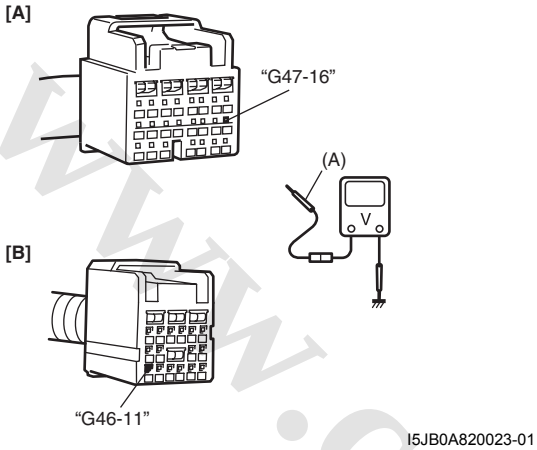 <br><br>*Is voltage 14 V or less?* | Go to Step 2. | Check charging system and repair as necessary referring to “Generator Test (Overcharged Battery Check): in Section 1J”. |
| 2 | 1) With ignition switch OFF, reconnect SDM connector.<br>*With ignition switch ON, is DTC B1016 indicated?* | Substitute a known-good SDM and recheck. | Intermittent trouble. Check for intermittent trouble referring to “Inspection of Intermittent and Poor Connections: ” If OK, substitute a known-good SDM and recheck. |

**NOTE**

**Upon completion of inspection and repair work, perform the following items.**

- **Reconnect all air bag system components and ensure all components are properly mounted.**
- **Clear DTCs referring to “DTC Clearance: ”, if any.**
- **Repeat “Air Bag Diagnostic System Check: ” to confirm that the trouble has been corrected.**

www.cargeek.ir

www.CarGeek.ir


## DTC B1017: Power Source Voltage Low

S5JB0A8204013

### Wiring Diagram

Refer to “DTC B1016: Power Source Voltage High: ”.

**⚠ CAUTION**

**Be sure to observe instructions under CAUTION in “Air Bag Diagnostic System Check Flow”.**

### DTC Will Set when

The power source voltage is below specified value for specified time.

### Flow Test Description

**Step 1:** Check if voltage on battery is within normal range.
**Step 2:** Check if voltage applied to SDM is within normal range.
**Step 3:** Check if voltage applied to “L04” connector is within normal range.
**Step 4:** Check if DTC B1017 still exists.

### DTC Troubleshooting

| Step | Action | Yes | No |
|---|---|---|---|
| 1 | 1) Measure voltage on battery.<br>*Is voltage 11 V or more?* | Go to Step 2. | Check charging system and repair as necessary referring to “Generator Test (Undercharged Battery Check): in Section 1J”. |
| 2 | 1) With ignition switch OFF, disconnect SDM connector.<br>2) Check proper connection to SDM at “G47-16” or “G46-11” terminal.<br>3) If OK, turn ignition switch ON and then check voltage between “G47-16” [A] or “G46-11” [B] terminal on SDM connector and body ground.<br>**Special tool**<br>**(A): 09932–76010**<br> 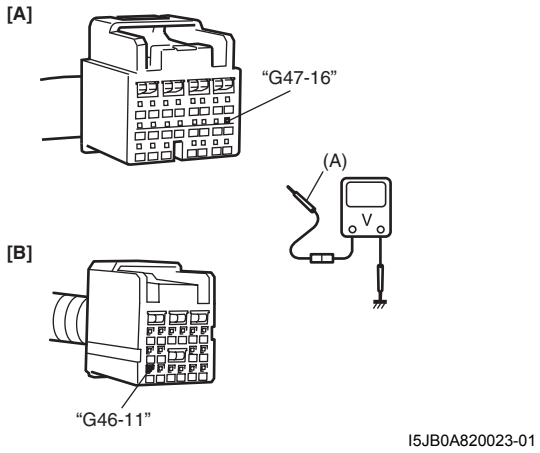 <br><br>*Is voltage 8 V or more?* | Go to Step 4. | Go to Step 3. |

www.cargeek.ir

www.CarGeek.ir

| Step | Action | Yes | No |
|---|---|---|---|
| 3 | 1) With ignition switch OFF, disconnect on connector “G01” junction block assembly.<br>2) Check proper connection at “G01-15” terminal.<br>3) If OK, turn ignition switch ON and then check voltage between “G01-15” terminal and body ground.<br> 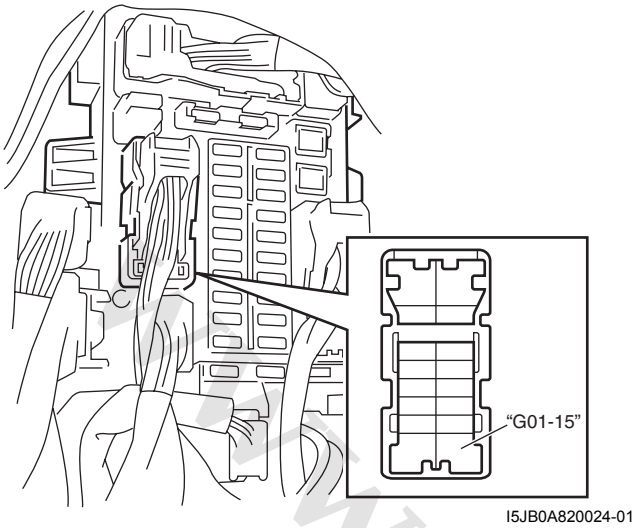 <br><br>*Is voltage 8 V or more?* | Go to Step 4. | Check circuit from battery to “G01” connector and charging system. |
| 4 | 1) With ignition switch OFF, reconnect SDM connector.<br>*With ignition switch ON, does DTC B1017 exist?* | Substitute a known-good SDM and recheck. | Check charging system and repair as necessary referring to “Generator Test (Undercharged Battery Check): in Section 1J”. |

**NOTE**

**Upon completion of inspection and repair work, perform the following items.**

- **Reconnect all air bag system components and ensure all components are properly mounted.**
- **Clear DTCs referring to “DTC Clearance: ”, if any.**
- **Repeat “Air Bag Diagnostic System Check: ” to confirm that the trouble has been corrected.**

www.cargeek.ir

www.CarGeek.ir


## DTC B1021: Air Bag Module Deployed

S5JB0A8204014

### DTC Will Set when

The SDM detects a crash of sufficient force to warrant activation of the air bag system. (SDM outputs a deployment command.)

### Flow Test Description

**Step 1:** Check that DTC B1021 has been set although air bag has not been deployed.
**Step 2:** Check that DTC has been set due to failure of SDM.

**NOTE**

**Before executing items in this flow, be sure to perform "Air Bag Diagnostic System Check: ".**

### DTC Troubleshooting

| Step | Action | Yes | No |
|---|---|---|---|
| 1 | 1) Turn ignition switch OFF.<br><br>*Has air bag deployed?* | Replace components and perform inspections as directed in "Repair and Inspection Required after Accident: ". | Go to Step 2. |
| 2 | 1) Inspect front of vehicle and undercarriage for signs of impact.<br><br>*Are there signs of impact?* | Replace components and perform inspections as directed in "Repair and Inspection Required after Accident: ". | Substitute a known-good SDM and recheck. |

**NOTE**

**Upon completion of inspection and repair work, perform the following items.**

- **Reconnect all air bag system components and ensure all components are properly mounted.**
- **Repeat "Air Bag Diagnostic System Check: " to confirm that the trouble has been corrected.**
- **Clear DTCs of BCM referring to "DTC Clearance: in Section 10B"**

www.cargeek.ir

www.CarGeek.ir

## DTC B1031: Driver Air Bag Initiator Circuit Resistance High

S5JB0A8204018

### Wiring Diagram

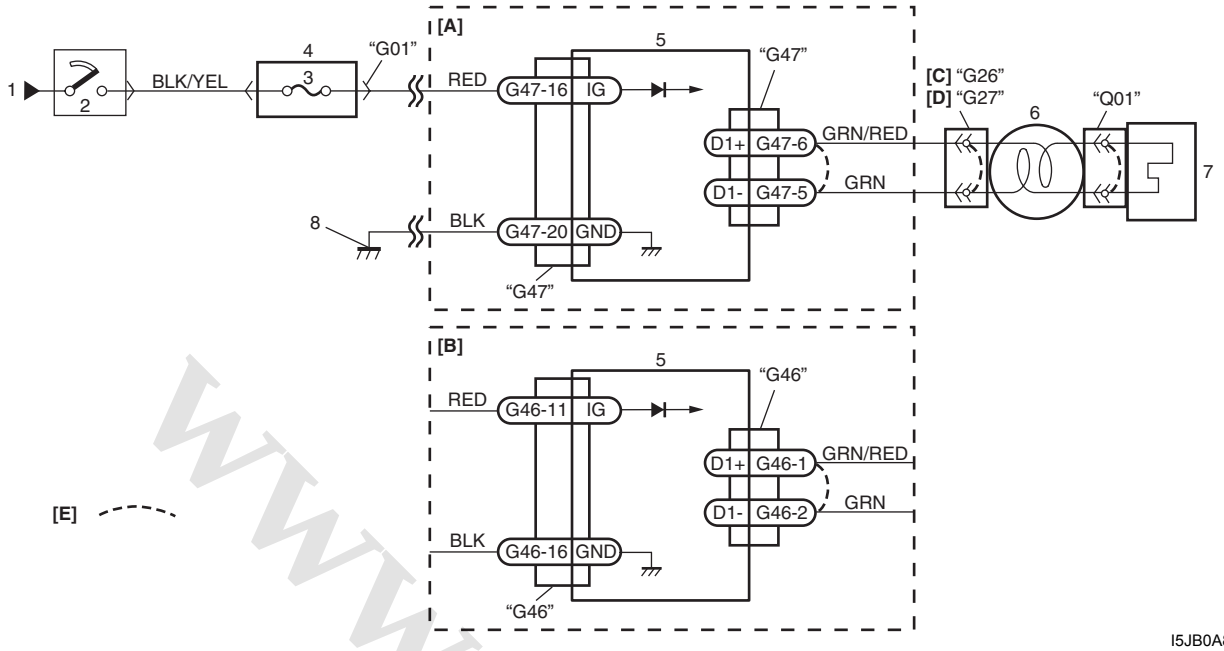


I5JB0A820025-01

| | | | |
|---|---|---|---|
| [A]: Without side-air bag and curtain-air bag | [E]: Shorting bar | 4. Junction block assembly | 8. Ground for air bag system |
| [B]: With side-air bag and curtain-air bag | 1. From main fuse | 5. SDM | |
| [C]: For vehicle without cruise control system | 2. Ignition switch | 6. Contact coil assembly | |
| [D]: For vehicle with cruise control system | 3. "A/B" fuse | 7. Driver air bag (inflator) module | |

**⚠ CAUTION**

**Be sure to observe instructions under CAUTION in "Air Bag Diagnostic System Check Flow".**

### DTC Will Set when

The combined resistance of the driver air bag (inflator) module, contact coil assembly, harness wiring and connector terminal contact is above a specified value for specified time.

### Flow Test Description

**Step 1:** Check whether malfunction is in contact coil and driver air bag (inflator) module or the others.
**Step 2:** Check driver air bag (inflator) module initiator circuit.
**Step 3:** Check whether malfunction is in contact coil or driver air bag (inflator) module.

www.cargeek.ir

www.CarGeek.ir


**DTC Troubleshooting**

| Step | Action | Yes | No |
|---|---|---|---|
| 1 | 1) With ignition switch OFF, disconnect contact coil connector located under of the steering column.<br>2) Check proper connection to contact coil at terminal in “G26” or “G27” connector.<br>3) If OK, then connect special tools (B) and (C) to “G26” connector (For vehicle without cruise control system [A]) or special tools (B) and (D) to “G27” connector (for vehicle with cruise control system [B]) disconnected in Step 1).<br>**Special tool**<br>**(B): 09932–75010**<br>**(C): 09932–78340**<br>**(D): 09932–77320**<br> 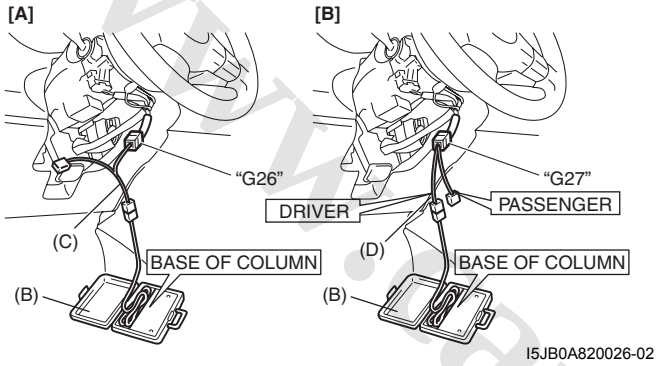 <br><br>4) Check SDM DTC.<br>*With ignition switch ON, is DTC B1031 indicated?* | Go to Step 2. | Go to Step 3. |

www.cargeek.ir

www.CarGeek.ir

| Step | Action | Yes | No |
|---|---|---|---|
| 2 | 1) With ignition switch OFF, disconnect SDM connector “G47” or “G46”.<br>2) Check proper connection to SDM at terminals “G47-5” and “G47-6” or “G46-1” and “G46-2”.<br>3) If OK, release shorting bar in SDM connector inserting release tool (1) included in special tool (A).<br>4) Measure resistance between “G47-5” and “G47-6” terminals [A] or between “G46-1” and “G46-2” terminals [B] with connected special tools (B) and (C) (for vehicle without cruise control system [C]) or special tools (B) and (D) (for vehicle with cruise control system [D]).<br>**Special tool**<br>**(A): 09932–76010**<br>**(B): 09932–75010**<br>**(C): 09932–78340**<br>**(D): 09932–77320**<br> 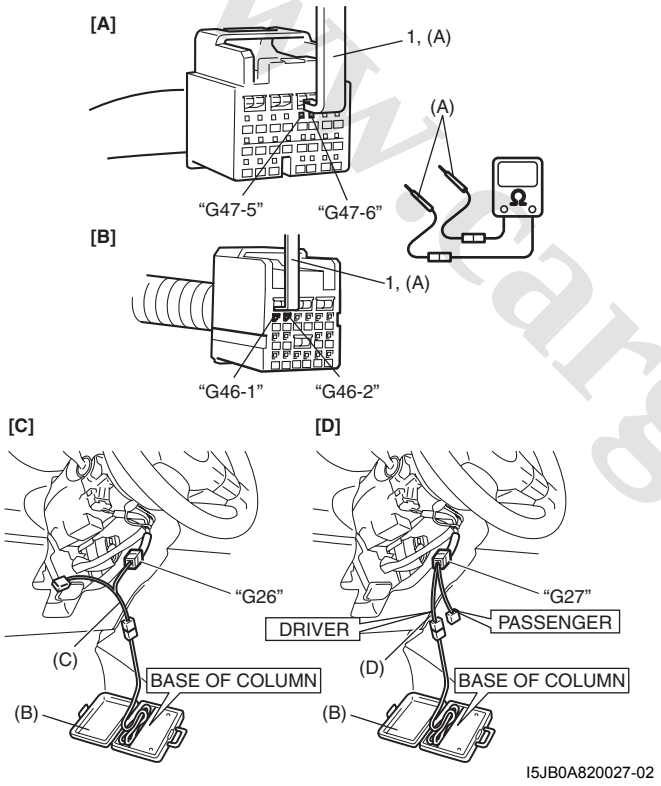 <br><br>*Is resistance 5.5 Ω or less?* | Substitute a known-good SDM and recheck. | High resistance or open wire in “GRN/RED” or “GRN” circuit. |

www.cargeek.ir

www.CarGeek.ir


| Step | Action | Yes | No |
|---|---|---|---|
| 3 | 1) With ignition switch OFF, disconnect special tools (B) and (C) or (D) from “G26” or “G27” connector and then reconnect contact coil connector located under of the steering column.<br>2) Remove driver air bag (inflator) module from steering wheel referring to “Driver Air Bag (Inflator) Module Removal and Installation: ”.<br>3) Check proper connection to driver air bag (inflator) module connector.<br>4) If OK, then connect special tools (A), (B) and (E) to driver air bag (inflator) module connector.<br>**Special tool**<br>**(A): 09932–76010**<br>**(B): 09932–75010**<br>**(C): 09932–78340**<br>**(D): 09932–77320**<br>**(E): 09932–78310**<br> 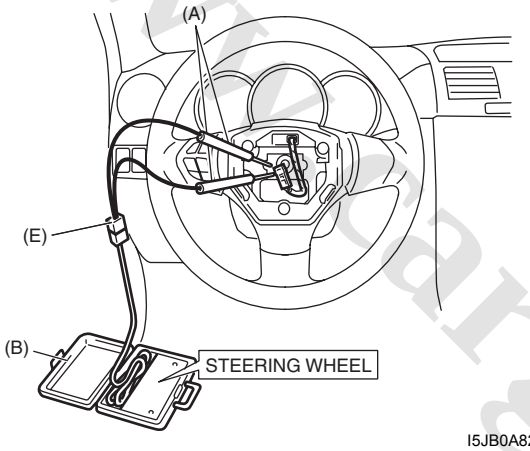 <br><br>I5JB0A820028-01<br>5) Check SDM DTC.<br>*With ignition switch ON, is DTC B1031 indicated?* | Turn ignition switch OFF. Replace contact coil assembly referring to “Contact Coil Cable Assembly Removal and Installation: in Section 6B”. | Turn ignition switch OFF. Replace driver air bag (inflator) module referring to “Driver Air Bag (Inflator) Module Removal and Installation: ”. |

**NOTE**

**Upon completion of inspection and repair work, perform the following items.**

- **Reconnect all air bag system components and ensure all components are properly mounted.**
- **Clear DTCs referring to “DTC Clearance: ”, if any.**
- **Repeat “Air Bag Diagnostic System Check: ” to confirm that the trouble has been corrected.**

www.cargeek.ir

www.CarGeek.ir

## DTC B1032: Driver Air Bag Initiator Circuit Resistance Low

S5JB0A8204019

### Wiring Diagram

Refer to “DTC B1031: Driver Air Bag Initiator Circuit Resistance High: ”.

**⚠ CAUTION**

**Be sure to observe instructions under CAUTION in “Air Bag Diagnostic System Check Flow”.**

### DTC Will Set when

The combined resistance of the driver air bag (inflator) module, contact coil assembly, harness wiring and connector terminal contact is below a specified value for specified time.

### Flow Test Description

**Step 1:** Check whether malfunction is in contact coil and driver air bag (inflator) module or the others.
**Step 2:** Check driver air bag (inflator) module initiator circuit.
**Step 3:** Check whether malfunction is in contact coil or driver air bag (inflator) module.

### DTC Troubleshooting

| Step | Action | Yes | No |
|---|---|---|---|
| 1 | 1) With ignition switch OFF, disconnect contact coil connector located under of the steering column.<br>2) Check proper connection to contact coil at terminal in “G26” or “G27” connector.<br>3) If OK, then connect special tools (B) and (C) to “G26” connector (For vehicle without cruise control system [A]) or special tools (B) and (D) to “G27” connector (for vehicle with cruise control system [B]) disconnected in Step 1).<br>**Special tool**<br>**(B): 09932–75010**<br>**(C): 09932–78340**<br>**(D): 09932–77320**<br> 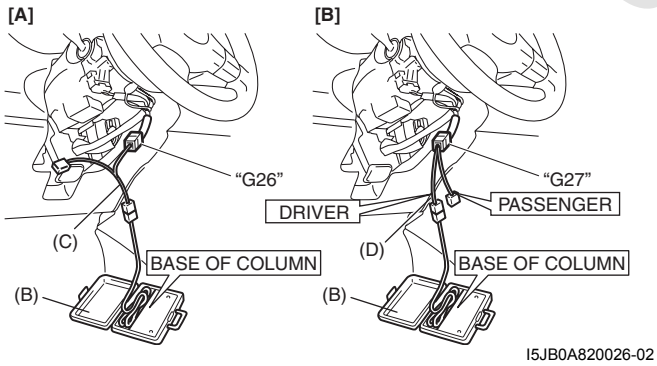 <br><br>4) Check SDM DTC.<br>*With ignition switch ON, is DTC B1032 indicated?* | Go to Step 2. | Go to Step 3. |

www.cargeek.ir

www.CarGeek.ir


| Step | Action | Yes | No |
|---|---|---|---|
| 2 | 1) With ignition switch OFF, disconnect SDM connector “G47” or “G46”.<br>2) Check proper connection to SDM at terminals “G47-5” and “G47-6” or “G46-1” and “G46-2”.<br>3) If OK, release shorting bar in SDM connector inserting release tool (1) included in special tool (A).<br>4) Measure resistance between “G47-5” and “G47-6” terminals [A] or between “G46-1” and “G46-2” terminals [B] with connected special tools (B) and (C) (for vehicle without cruise control system [C]) or special tools (B) and (D) (for vehicle with cruise control system [D]).<br>**Special tool**<br>**(A): 09932–76010**<br>**(B): 09932–75010**<br>**(C): 09932–78340**<br>**(D): 09932–77320**<br> 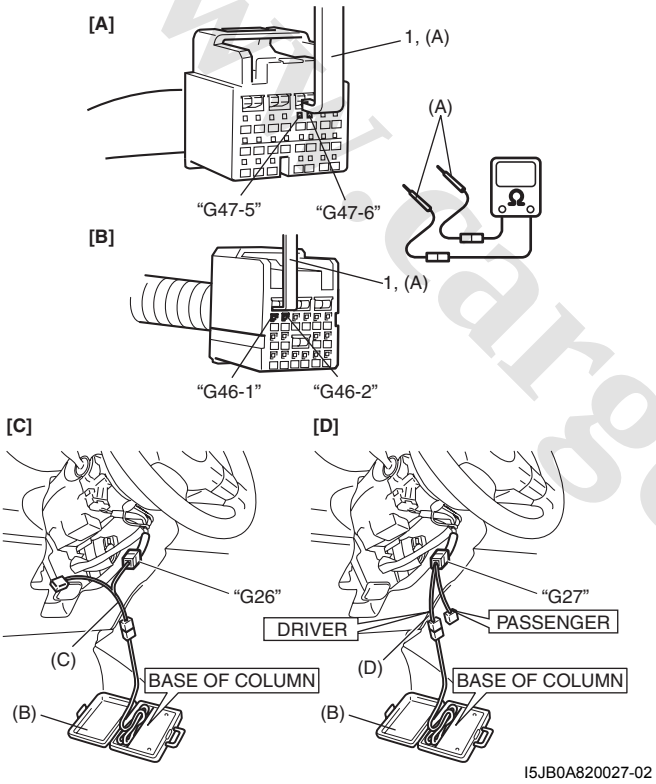 <br><br>*Is resistance 0.95 Ω or more?* | Substitute a known-good SDM and recheck. | “GRN/RED” circuit shorted to “GRN” circuit, “GRN/RED” circuit or “GRN” circuit shorted to other circuit. |

www.cargeek.ir

www.CarGeek.ir

| Step | Action | Yes | No |
|---|---|---|---|
| 3 | 1) With ignition switch OFF, disconnect special tools (B) and (C) or (D) from “G26” or “G27” connector and reconnect contact coil connector located under of the steering column.<br>2) Remove driver air bag (inflator) module from steering column referring to “Driver Air Bag (Inflator) Module Removal and Installation: ”.<br>3) Check proper connection to driver air bag (inflator) module connector.<br>4) If OK, then connect special tools (A), (B) and (E) to driver air bag (inflator) module connector.<br>**Special tool**<br>**(A): 09932–76010**<br>**(B): 09932–75010**<br>**(C): 09932–78340**<br>**(D): 09932–77320**<br>**(E): 09932–78310**<br> 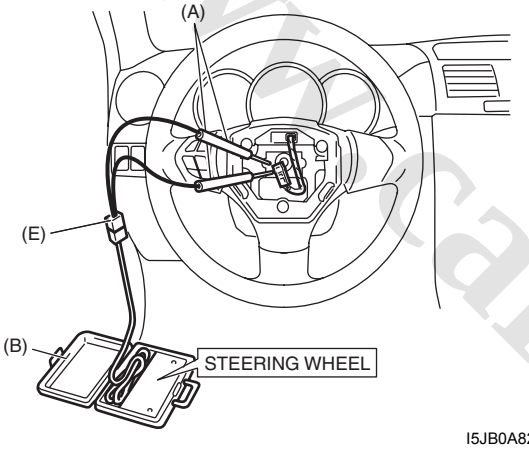 <br><br>I5JB0A820028-01<br>5) Check SDM DTC.<br>*With ignition switch ON, is DTC B1032 indicated?* | Turn ignition switch OFF. Replace contact coil assembly referring to “Contact Coil Cable Assembly Removal and Installation: in Section 6B”. | Turn ignition switch OFF. Replace driver air bag (inflator) module referring to “Driver Air Bag (Inflator) Module Removal and Installation: ”. |

**NOTE**

**Upon completion of inspection and repair work, perform the following items.**

- **Reconnect all air bag system components and ensure all components are properly mounted.**
- **Clear DTCs referring to “DTC Clearance: ”, if any.**
- **Repeat “Air Bag Diagnostic System Check: ” to confirm that the trouble has been corrected.**

www.cargeek.ir

www.CarGeek.ir


## DTC B1033: Driver Air Bag Initiator Circuit Short to Ground

S5JB0A8204020

### Wiring Diagram

Refer to “DTC B1031: Driver Air Bag Initiator Circuit Resistance High: ”.

**⚠ CAUTION**

**Be sure to observe instructions under CAUTION in “Air Bag Diagnostic System Check Flow”.**

### DTC Will Set when

The voltage measured at driver air bag initiator circuit is below a specified value for specified time.

### Flow Test Description

**Step 1:** Check whether malfunction is in contact coil and driver air bag (inflator) module or the others.
**Step 2:** Check driver air bag (inflator) module initiator circuit.
**Step 3:** Check whether malfunction is in contact coil or driver air bag (inflator) module.

### DTC Troubleshooting

| Step | Action | Yes | No |
|---|---|---|---|
| 1 | 1) With ignition switch OFF, disconnect contact coil connector located under of the steering column.<br>2) Check proper connection to contact coil at terminal in “G26” or “G27” connector.<br>3) If OK, then connect special tools (B) and (C) to “G26” connector (For vehicle without cruise control system [A]) or special tools (B) and (D) to “G27” connector (for vehicle with cruise control system [B]) disconnected in Step 1).<br>**Special tool**<br>**(B): 09932–75010**<br>**(C): 09932–78340**<br>**(D): 09932–77320**<br> 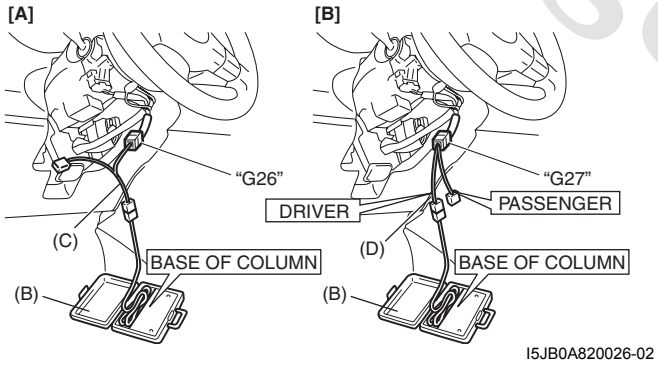 <br><br>4) Check SDM DTC.<br>*With ignition switch ON, is DTC B1033 indicated?* | Go to Step 2. | Go to Step 3. |

www.cargeek.ir

www.CarGeek.ir

| Step | Action | Yes | No |
|---|---|---|---|
| 2 | 1) With ignition switch OFF, disconnect special tools (B) and (C) or (D) from “G26” or “G27” connector and SDM connector “G47” or “G46” from SDM respectively.<br>2) Release Shorting bar in SDM connector inserting release tool (1) included in special tool (A).<br>3) Measure resistance between “G47-5” terminal and body ground, and between “G47-6” terminal and body ground [A] or between “G46-1” terminal and body ground, and between “G46-2” terminal and body ground [B].<br>**Special tool**<br>**(A): 09932–76010**<br>**(B): 09932–75010**<br>**(C): 09932–78340**<br>**(D): 09932–77320**<br> 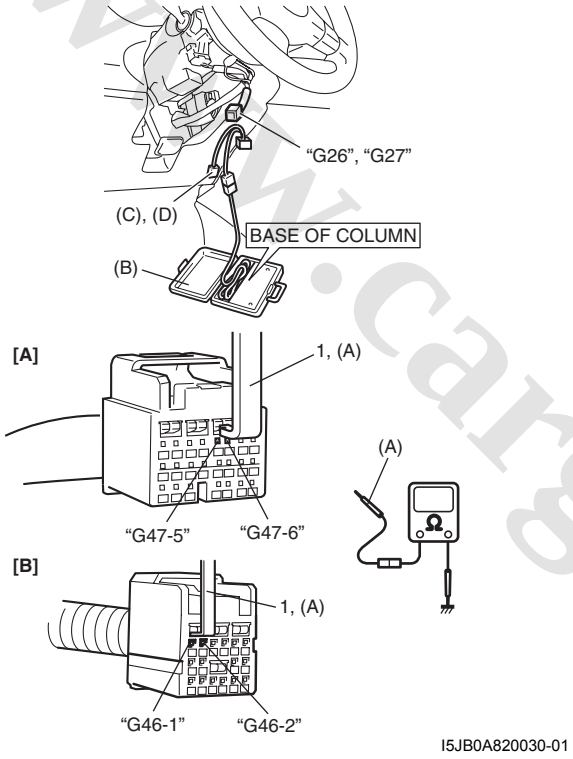 <br><br>*Are resistances infinity?* | Substitute a known-good SDM and recheck. | “GRN/RED” circuit or “GRN” circuit shorted to ground. |

www.cargeek.ir

www.CarGeek.ir


| Step | Action | Yes | No |
|---|---|---|---|
| 3 | 1) With ignition switch OFF, disconnect special tools (B) and (C) or (D) from “G26” or “G27” connector and reconnect contact coil connector located under of the steering column.<br>2) Remove driver air bag (inflator) module from steering column referring to “Driver Air Bag (Inflator) Module Removal and Installation: ”.<br>3) Check proper connection to driver air bag (inflator) module connector.<br>4) If OK, then connect special tools (A), (B) and (E) to driver air bag (inflator) module connector.<br>**Special tool**<br>**(A): 09932–76010**<br>**(B): 09932–75010**<br>**(C): 09932–78340**<br>**(D): 09932–77320**<br>**(E): 09932–78310**<br> 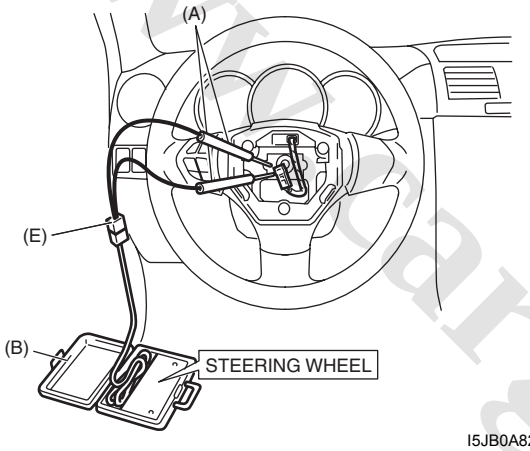 <br><br>I5JB0A820028-01<br>5) Check SDM DTC.<br>*With ignition switch ON, is DTC B1033 indicated?* | Turn ignition switch OFF. Replace contact coil assembly referring to “Contact Coil Cable Assembly Removal and Installation: in Section 6B”. | Turn ignition switch OFF. Replace driver air bag (inflator) module referring to “Driver Air Bag (Inflator) Module Removal and Installation: ”. |

**NOTE**

**Upon completion of inspection and repair work, perform the following items.**

- **Reconnect all air bag system components and ensure all components are properly mounted.**
- **Clear DTCs referring to “DTC Clearance: ”, if any.**
- **Repeat “Air Bag Diagnostic System Check: ” to confirm that the trouble has been corrected.**

www.cargeek.ir

www.CarGeek.ir

## DTC B1034: Driver Air Bag Initiator Circuit Short to Power Circuit

S5JB0A8204021

### Wiring Diagram

Refer to “DTC B1031: Driver Air Bag Initiator Circuit Resistance High: ”.

**⚠ CAUTION**

**Be sure to observe instructions under CAUTION in “Air Bag Diagnostic System Check Flow”.**

### DTC Will Set when

The voltage measured at driver air bag initiator circuit is above a specified value for specified time.

### Flow Test Description

**Step 1:** Check whether malfunction is in contact coil and driver air bag (inflator) module or the others.
**Step 2:** Check driver air bag (inflator) module initiator circuit.
**Step 3:** Check whether malfunction is in contact coil or driver air bag (inflator) module.

### DTC Troubleshooting

| Step | Action | Yes | No |
|---|---|---|---|
| 1 | 1) With ignition switch OFF, disconnect contact coil connector located under of the steering column.<br>2) Check proper connection to contact coil at terminal in “G26” or “G27” connector.<br>3) If OK, then connect special tools (B) and (C) to “G26” connector (For vehicle without cruise control system [A]) or special tools (B) and (D) to “G27” connector (for vehicle with cruise control system [B]) disconnected in Step 1).<br>**Special tool**<br>**(B): 09932–75010**<br>**(C): 09932–78340**<br>**(D): 09932–77320**<br> 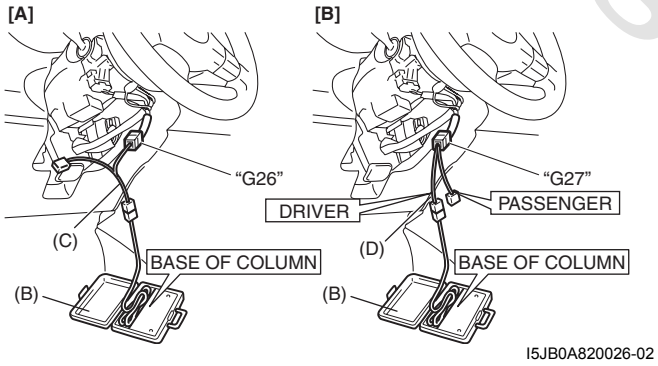 <br><br>4) Check SDM DTC.<br>*With ignition switch ON, is DTC B1034 indicated?* | Go to Step 2. | Go to Step 3. |

www.cargeek.ir

www.CarGeek.ir


| Step | Action | Yes | No |
|---|---|---|---|
| 2 | 1) With ignition switch OFF, disconnect special tools (B) and (C) or (D) from “G26” or “G27” connector and SDM connector “G47” or “G46” from SDM respectively.<br>2) Release Shorting bar in SDM connector inserting release tool (1) included in special tool (A).<br>3) Measure voltage between “G47-5” terminal and body ground, and between “G47-6” terminal and body ground [A] or between “G46-1” terminal and body ground, and between “G46-2” terminal and body ground [B].<br>**Special tool**<br>**(A): 09932–76010**<br>**(B): 09932–75010**<br>**(C): 09932–78340**<br>**(D): 09932–77320**<br> 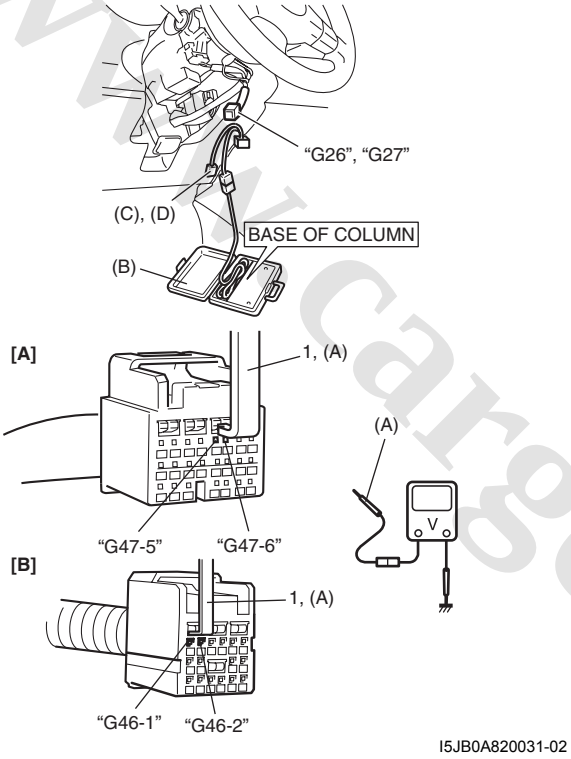 <br><br>*With ignition switch ON, is each measured value 4 V or less?* | Substitute a known-good SDM and recheck. | “GRN/RED” circuit or “GRN” circuit shorted to power supply circuit. |

www.cargeek.ir

www.CarGeek.ir

| Step | Action | Yes | No |
|---|---|---|---|
| 3 | 1) With ignition switch OFF, disconnect special tools (B) and (C) or (D) from “G26” or “G27” connector and reconnect contact coil connector located under of the steering column.<br>2) Remove driver air bag (inflator) module from steering column referring to “Driver Air Bag (Inflator) Module Removal and Installation: ”.<br>3) Check proper connection to driver air bag (inflator) module connector.<br>4) If OK, then connect special tools (A), (B) and (E) to driver air bag (inflator) module connector.<br>**Special tool**<br>**(A): 09932–76010**<br>**(B): 09932–75010**<br>**(C): 09932–78340**<br>**(D): 09932–77320**<br>**(E): 09932–78310**<br> 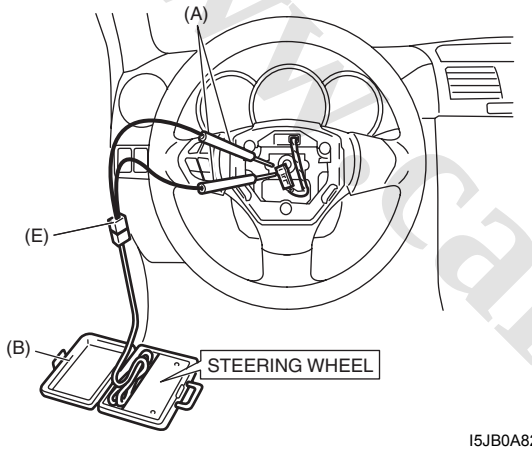 <br><br>I5JB0A820028-01<br>5) Check SDM DTC.<br>*With ignition switch ON, is DTC B1034 indicated?* | Turn ignition switch OFF. Replace contact coil assembly referring to “Contact Coil Cable Assembly Removal and Installation: in Section 6B”. | Turn ignition switch OFF. Replace driver air bag (inflator) module referring to “Driver Air Bag (Inflator) Module Removal and Installation: ”. |

**NOTE**

**Upon completion of inspection and repair work, perform the following items.**

- **Reconnect all air bag system components and ensure all components are properly mounted.**
- **Clear DTCs referring to “DTC Clearance: ”, if any.**
- **Repeat “Air Bag Diagnostic System Check: ” to confirm that the trouble has been corrected.**

www.cargeek.ir

www.CarGeek.ir


## DTC B1041: Passenger Air Bag Initiator Circuit Resistance High

S5JB0A8204022

### Wiring Diagram

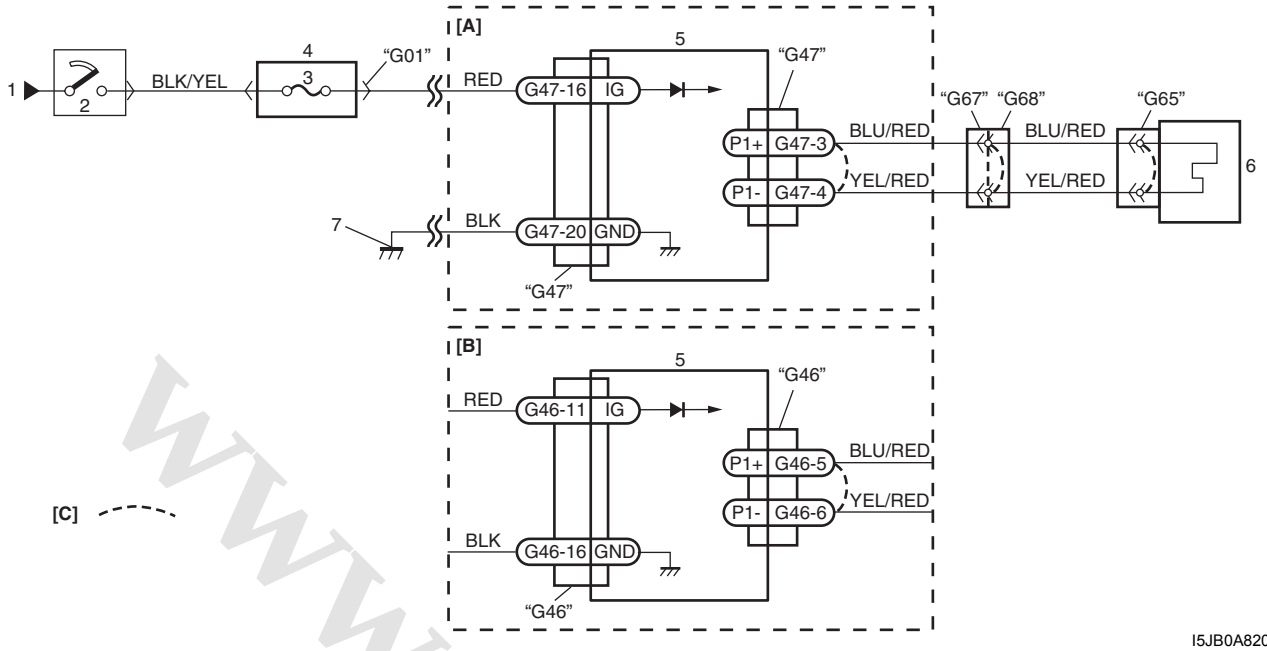


I5JB0A820032-01

| | | | |
|---|---|---|---|
| [A]: Without side-air bag and curtain-air bag | 1. From main fuse | 4. Junction block assembly | 7. Ground for air bag system |
| [B]: With side-air bag and curtain-air bag | 2. Ignition switch | 5. SDM | |
| [C]: Shorting bar | 3. "A/B" fuse | 6. Passenger air bag (inflator) module | |

**⚠ CAUTION**

**Be sure to observe instructions under CAUTION in "Air Bag Diagnostic System Check Flow".**

### DTC Will Set when

The combined resistance of the passenger air bag (inflator) module, harness wiring and connector terminal contact is above a specified value for specified time.

### Flow Test Description

**Step 1:** Check if malfunction is in passenger air bag (inflator) module.
**Step 2:** Check passenger air bag (inflator) module initiator circuit. (Between "G68" and "G65")
**Step 3:** Check passenger air bag (inflator) module initiator circuit. (Between "G67" and "G47" or "G67" and "G46")

www.cargeek.ir

www.CarGeek.ir

**DTC Troubleshooting**

| Step | Action | Yes | No |
|---|---|---|---|
| 1 | 1) With ignition switch OFF, disconnect passenger air bag (inflator) module connector.<br>2) Check proper connection to passenger air bag (inflator) module at terminals in “G65” connector.<br>3) If OK, then connect special tools (A), (B) and (D) to “G65” connector.<br>**Special tool**<br>**(A): 09932–76010**<br>**(B): 09932–75010**<br>**(D): 09932–78310**<br> 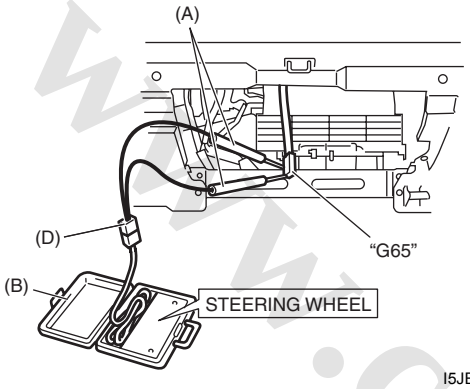 <br><br>I5JB0A820033-01<br>4) Check SDM DTC.<br>*With ignition switch ON, is DTC B1041 indicated?* | Go to Step 2. | Turn ignition switch OFF. Replace passenger air bag (inflator) module referring to “Passenger Air Bag (Inflator) Module Removal and Installation: ”. |
| 2 | 1) With ignition switch OFF, disconnect “G67” connector located near the glove box.<br>2) Check proper connection to instrument panel harness connector at terminal “G67-1” and “G67-2”.<br>3) If OK, then connect special tools (B) and (C) to “G67” connector disconnected in Step 1).<br>**Special tool**<br>**(B): 09932–75010**<br>**(C): 09932–77320**<br> 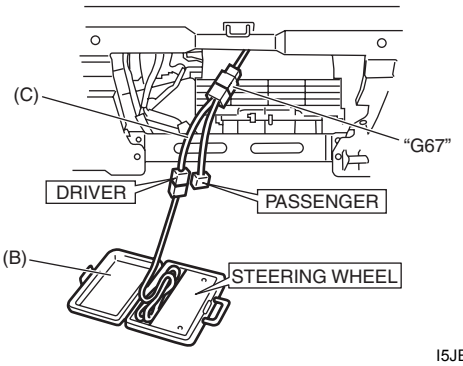 <br><br>I5JB0A820034-01<br>4) Check SDM DTC.<br>*With ignition switch ON, is DTC B1041 indicated?* | Go to Step 3. | High resistance or open wire “BLU/RED” or “YEL/RED” circuit. (Between “G68” and “G65” connectors) |

www.cargeek.ir

www.CarGeek.ir


| Step | Action | Yes | No |
|---|---|---|---|
| 3 | 1) With ignition switch OFF, disconnect SDM connector “G47” or “G46”.<br>2) Check proper connection to SDM at terminals “G47-3” and “G47-4” or “G46-5” and “G46-6”.<br>3) If OK, release shorting bar in SDM connector inserting release too (1) included in special tool (A).<br>4) Measure resistance between “G47-3” and “G47-4” terminals [A] or between “G46-5” and “G46-6” terminals [B] with connected special tools (B) and (C).<br>**Special tool**<br>**(A): 09932–76010**<br>**(B): 09932–75010**<br>**(C): 09932–77320**<br> 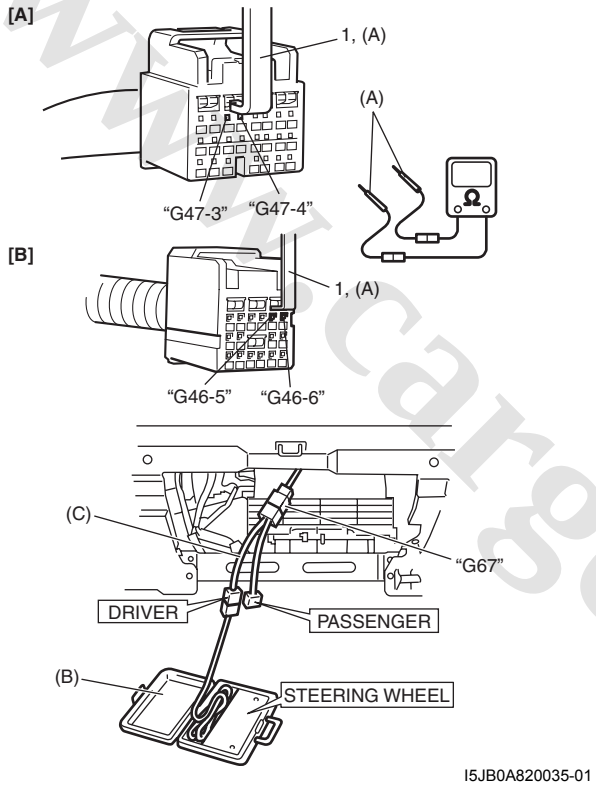 <br><br>*Is resistance 5.5 Ω or less?* | Substitute a known-good SDM and recheck. | High resistance or open wire in “BLU/RED” or “YEL/RED” circuit. (Between “G67” and “G47” connectors or between “G67” and “G46” connectors). |

**NOTE**

**Upon completion of inspection and repair work, perform the following items.**

- **Reconnect all air bag system components and ensure all components are properly mounted.**
- **Clear DTCs referring to “DTC Clearance: ”, if any.**
- **Repeat “Air Bag Diagnostic System Check: ” to confirm that the trouble has been corrected.**

www.cargeek.ir

www.CarGeek.ir

## DTC B1042: Passenger Air Bag Initiator Circuit Resistance Low

S5JB0A8204023

### Wiring Diagram

Refer to “DTC B1041: Passenger Air Bag Initiator Circuit Resistance High: ”.

**⚠ CAUTION**

**Be sure to observe instructions under CAUTION in “Air Bag Diagnostic System Check Flow”.**

### DTC Will Set when

The combined resistance of the passenger air bag (inflator) module, harness wiring and connector terminal contact is below a specified value for specified time.

### Flow Test Description

**Step 1:** Check if malfunction is in passenger air bag (inflator) module.
**Step 2:** Check passenger air bag (inflator) module initiator circuit. (Between “G68” and “G65”)
**Step 3:** Check passenger air bag (inflator) module initiator circuit. (Between “G67” and “G47” or “G67” and “G46”)

### DTC Troubleshooting

| Step | Action | Yes | No |
|---|---|---|---|
| 1 | 1) With ignition switch OFF, disconnect passenger air bag (inflator) module connector.<br>2) Check proper connection to passenger air bag (inflator) module at terminals in “G65” connector.<br>3) If OK, then connect special tools (A), (B) and (D) to “G65” connector.<br>**Special tool**<br>**(A): 09932–76010**<br>**(B): 09932–75010**<br>**(D): 09932–78310**<br> 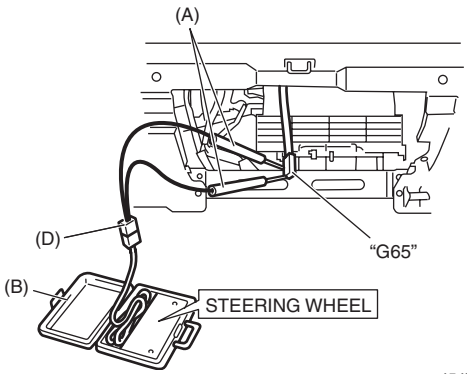 <br><br>I5JB0A820033-01<br>4) Check SDM DTC.<br>*With ignition switch ON, is DTC B1042 indicated?* | Go to Step 2. | Turn ignition switch OFF. Replace passenger air bag (inflator) module referring to “Passenger Air Bag (Inflator) Module Removal and Installation: ”. |

www.cargeek.ir

www.CarGeek.ir


| Step | Action | Yes | No |
|---|---|---|---|
| 2 | 1) With ignition switch OFF, disconnect “G67” connector located near the glove box.<br>2) Check proper connection to instrument panel harness connector at terminal “G67-1” and “G67-2”.<br>3) If OK, then connect special tools (B) and (C) to “G67” connector disconnected in Step 1).<br>**Special tool**<br>**(B): 09932–75010**<br>**(C): 09932–77320**<br> 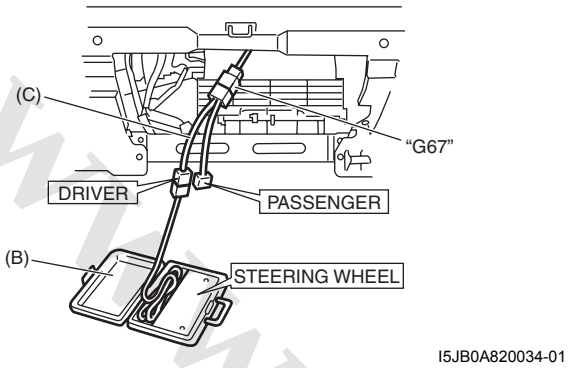 <br><br>4) Check SDM DTC.<br>*With ignition switch ON, is DTC B1042 indicated?* | Go to Step 3. | “BLU/RED” circuit shorted to “YEL/RED” circuit, “BLU/RED” circuit or “YEL/RED” circuit shorted to other circuit. (Between “G68” and “G65” connectors) |

www.cargeek.ir

www.CarGeek.ir

| Step | Action | Yes | No |
|---|---|---|---|
| 3 | 1) With ignition switch OFF, disconnect SDM connector “G47” or “G46”.<br>2) Check proper connection to SDM at terminals “G47-3” and “G47-4” or “G46-5” and “G46-6”.<br>3) If OK, release shorting bar in SDM connector inserting release tool (1) included in special tool (A).<br>4) Measure resistance between “G47-3” and “G47-4” terminals [A] or between “G46-5” and “G46-6” terminals [B] with connected special tools (B) and (C).<br>**Special tool**<br>**(A): 09932–76010**<br>**(B): 09932–75010**<br>**(C): 09932–77320**<br> 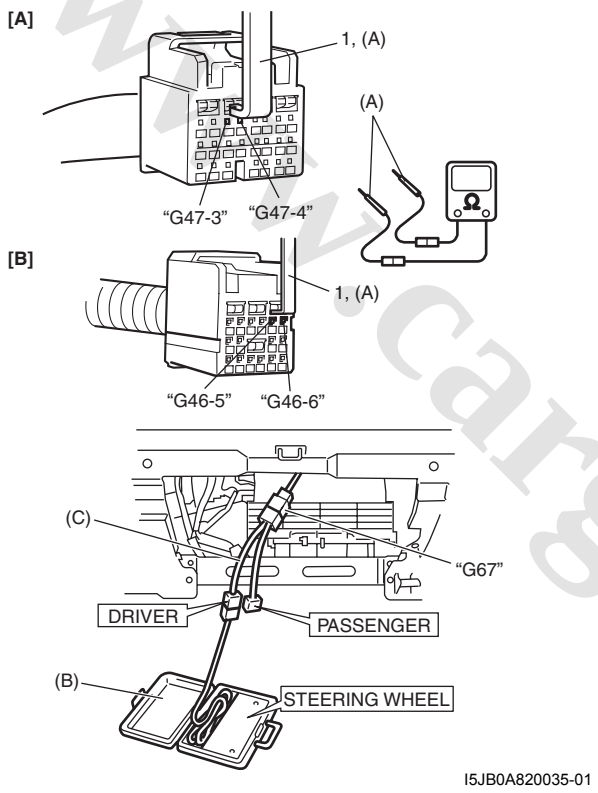 <br><br>*Is resistance 0.65 Ω or more?* | Substitute a known-good SDM and recheck. | “BLU/RED” circuit shorted to “YEL/RED” circuit, “BLU/RED” circuit or “YEL/RED” circuit shorted to other circuit. (Between “G67” and “G47” connectors or between “G67” and “G46” connectors). |

**NOTE**

**Upon completion of inspection and repair work, perform the following items.**

- **Reconnect all air bag system components and ensure all components are properly mounted.**
- **Clear DTCs referring to “DTC Clearance: ”, if any.**
- **Repeat “Air Bag Diagnostic System Check: ” to confirm that the trouble has been corrected.**

www.cargeek.ir

www.CarGeek.ir


## DTC B1043: Passenger Air Bag Initiator Circuit Short to Ground

S5JB0A8204024

### Wiring Diagram

Refer to “DTC B1041: Passenger Air Bag Initiator Circuit Resistance High: ”.

**⚠ CAUTION**

**Be sure to observe instructions under CAUTION in “Air Bag Diagnostic System Check Flow”.**

### DTC Will Set when

The voltage measured at passenger air bag (initiator) circuit is below a specified value for specified time.

### Flow Test Description

**Step 1:** Check if malfunction is in passenger air bag (inflator) module.
**Step 2:** Check passenger air bag (inflator) module initiator circuit. (Between “G68” and “G65”)
**Step 3:** Check passenger air bag (inflator) module initiator circuit. (Between “G67” and “G47” or “G67” and “G46”)

### DTC Troubleshooting

| Step | Action | Yes | No |
|---|---|---|---|
| 1 | 1) With ignition switch OFF, disconnect passenger air bag (inflator) module connector.<br>2) Check proper connection to passenger air bag (inflator) module at terminals in “G65” connector.<br>3) If OK, then connect special tools (A), (B) and (D) to “G65” connector.<br>**Special tool**<br>**(A): 09932–76010**<br>**(B): 09932–75010**<br>**(D): 09932–78310**<br> 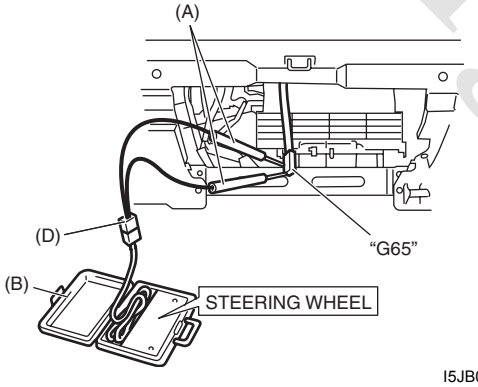 <br><br>I5JB0A820033-01<br>4) Check SDM DTC.<br>*With ignition switch ON, is DTC B1043 indicated?* | Go to Step 2. | Turn ignition switch OFF. Replace passenger air bag (inflator) module referring to “Passenger Air Bag (Inflator) Module Removal and Installation: ”. |

www.cargeek.ir

www.CarGeek.ir

| Step | Action | Yes | No |
|---|---|---|---|
| 2 | 1) With ignition switch OFF, disconnect “G67” connector located near the glove box.<br>2) Check proper connection to instrument panel harness connector at terminal “G67-1” and “G67-2”.<br>3) If OK, then connect special tools (B) and (C) to “G67” connector disconnected in Step 1).<br>**Special tool**<br>**(B): 09932–75010**<br>**(C): 09932–77320**<br> 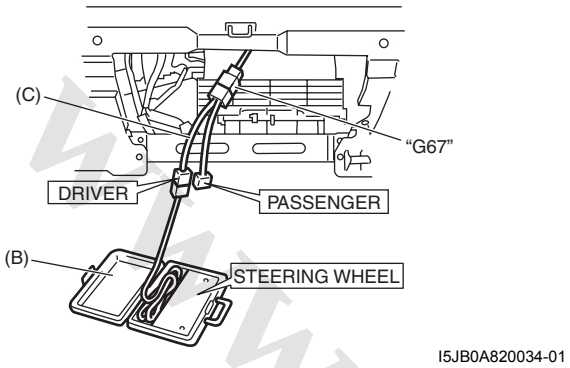 <br><br>4) Check SDM DTC.<br>*With ignition switch ON, is DTC B1043 indicated?* | Go to Step 3. | “BLU/RED” or “YEL/RED” circuit shorted to ground. (Between “G68” and “G65” connectors) |

www.cargeek.ir

www.CarGeek.ir


| Step | Action | Yes | No |
|---|---|---|---|
| 3 | 1) With ignition switch OFF, disconnect special tools (B) and (C) from “G67” connector and SDM connector “G47” or “G46” from SDM respectively.<br>2) Release shorting bar in SDM connector inserting release tool (1) included in special tool (A).<br>3) Measure resistance between “G47-3” and body ground, and between “G47-4” and body ground [A] or between “G46-5” and body ground, and between “G46-6” and body ground [B].<br>**Special tool**<br>**(A): 09932–76010**<br>**(B): 09932–75010**<br>**(C): 09932–77320**<br> 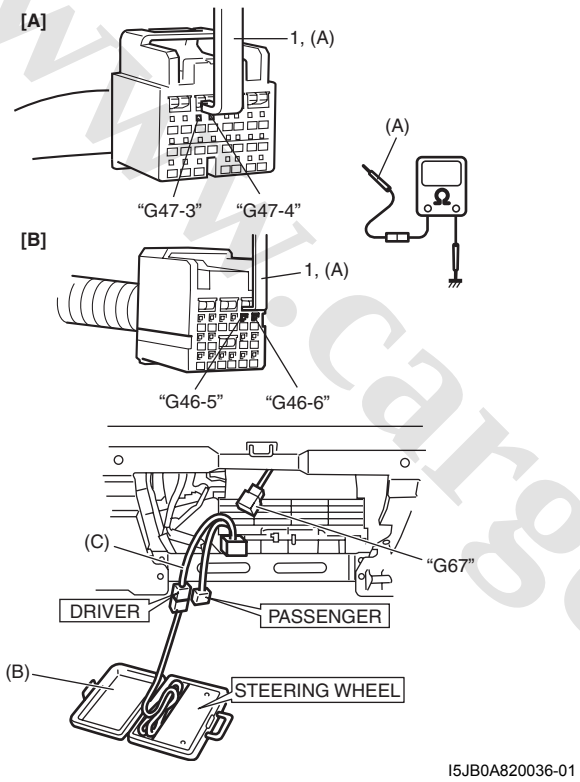 <br><br>*Is resistance infinity?* | Substitute a known-good SDM and recheck. | “BLU/RED” or “YEL/RED” circuit shorted to ground. (Between “G67” and “G47” connectors or between “G67” and “G46” connectors). |

**NOTE**

**Upon completion of inspection and repair work, perform the following items.**

- **Reconnect all air bag system components and ensure all components are properly mounted.**
- **Clear DTCs referring to “DTC Clearance: ”, if any.**
- **Repeat “Air Bag Diagnostic System Check: ” to confirm that the trouble has been corrected.**

www.cargeek.ir

www.CarGeek.ir

## DTC B1044: Passenger Air Bag Initiator Circuit Short to Power Circuit

S5JB0A8204025

### Wiring Diagram

Refer to “DTC B1041: Passenger Air Bag Initiator Circuit Resistance High: ”.

**⚠ CAUTION**

**Be sure to observe instructions under CAUTION in “Air Bag Diagnostic System Check Flow”.**

### DTC Will Set when

The voltage measured at passenger air bag (initiator) circuit is above a specified value for specified time.

### Flow Test Description

**Step 1:** Check if malfunction is in passenger air bag (inflator) module.
**Step 2:** Check passenger air bag (inflator) module initiator circuit. (Between “G68” and “G65”)
**Step 3:** Check passenger air bag (inflator) module initiator circuit. (Between “G67” and “G47” or “G67” and “G46”)

### DTC Troubleshooting

| Step | Action | Yes | No |
|---|---|---|---|
| 1 | 1) With ignition switch OFF, disconnect passenger air bag (inflator) module connector.<br>2) Check proper connection to passenger air bag (inflator) module at terminals in “G65” connector.<br>3) If OK, then connect special tools (A), (B) and (D) to “G65” connector.<br>**Special tool**<br>**(A): 09932–76010**<br>**(B): 09932–75010**<br>**(D): 09932–78310**<br> 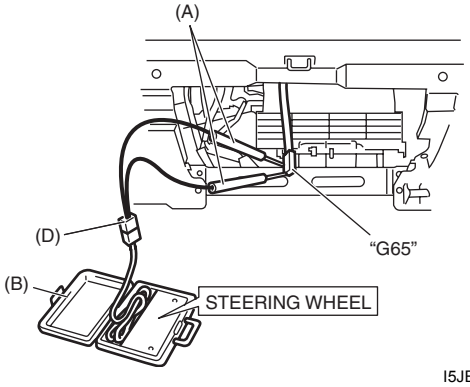 <br><br>I5JB0A820033-01<br>4) Check SDM DTC.<br>*With ignition switch ON, is DTC B1044 indicated?* | Go to Step 3. | Turn ignition switch OFF. Replace passenger air bag (inflator) module referring to “Passenger Air Bag (Inflator) Module Removal and Installation: ”. |

www.cargeek.ir

www.CarGeek.ir


| Step | Action | Yes | No |
|---|---|---|---|
| 2 | 1) With ignition switch OFF, disconnect “G67” connector located near the glove box.<br>2) Check proper connection to instrument panel harness connector at terminal “G67-1” and “G67-2”.<br>3) If OK, then connect special tools (B) and (C) to “G67” connector disconnected in Step 1).<br>**Special tool**<br>**(B): 09932–75010**<br>**(C): 09932–77320**<br> 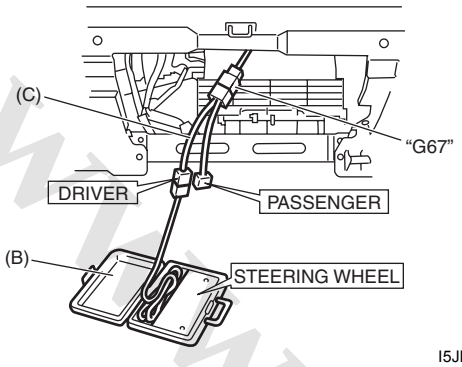 <br><br>I5JB0A820034-01<br>4) Check SDM DTC.<br>*With ignition switch ON, is DTC B1044 indicated?* | Go to Step 3. | “BLU/RED” or “YEL/RED” circuit shorted to power supply circuit. (Between “G68” and “G65” connectors) |

www.cargeek.ir

www.CarGeek.ir

| Step | Action | Yes | No |
|---|---|---|---|
| 3 | 1) With ignition switch OFF, disconnect special tools (B) and (C) from “G67” connector and SDM connector “G47” and “G46” from SDM respectively.<br>2) Release shorting bar in SDM connector inserting release tool (1) included in special tool (A).<br>3) Measure voltage between “G47-3” and body ground, and between “G47-4” and body ground [A] or between “G46-5” and body ground, and between “G46-6” and body ground [B].<br>**Special tool**<br>**(A): 09932–76010**<br>**(B): 09932–75010**<br>**(C): 09932–77320**<br> 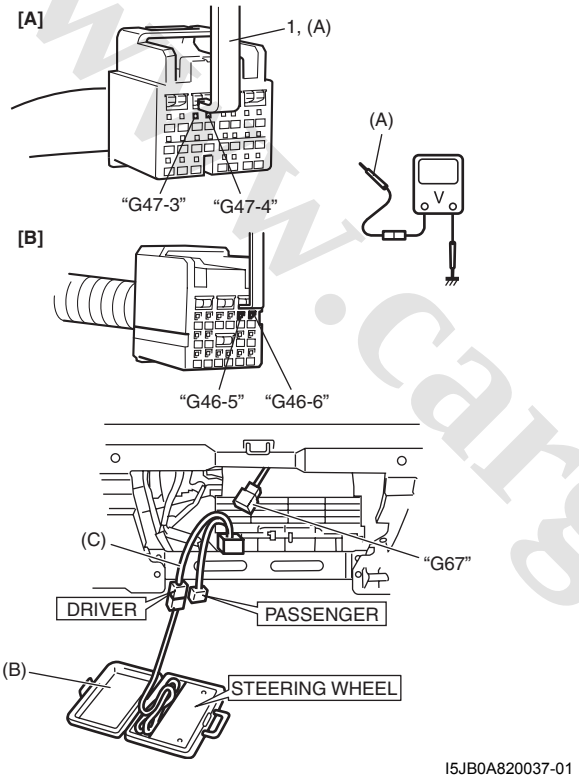 <br><br>*With ignition switch ON, is voltage 4 V or less?* | Substitute a known-good SDM and recheck. | “BLU/RED” or “YEL/RED” circuit shorted to power supply circuit. (Between “G67” and “G47” connectors or between “G67” and “G46” connectors). |

**NOTE**

**Upon completion of inspection and repair work, perform the following items.**

- **Reconnect all air bag system components and ensure all components are properly mounted.**
- **Clear DTCs referring to “DTC Clearance: ”, if any.**
- **Repeat “Air Bag Diagnostic System Check: ” to confirm that the trouble has been corrected.**

www.cargeek.ir

www.CarGeek.ir


## DTC B1051 / B1055: Driver / Passenger Pretensioner Initiator Circuit Resistance High

S5JB0A8204026

### Wiring Diagram

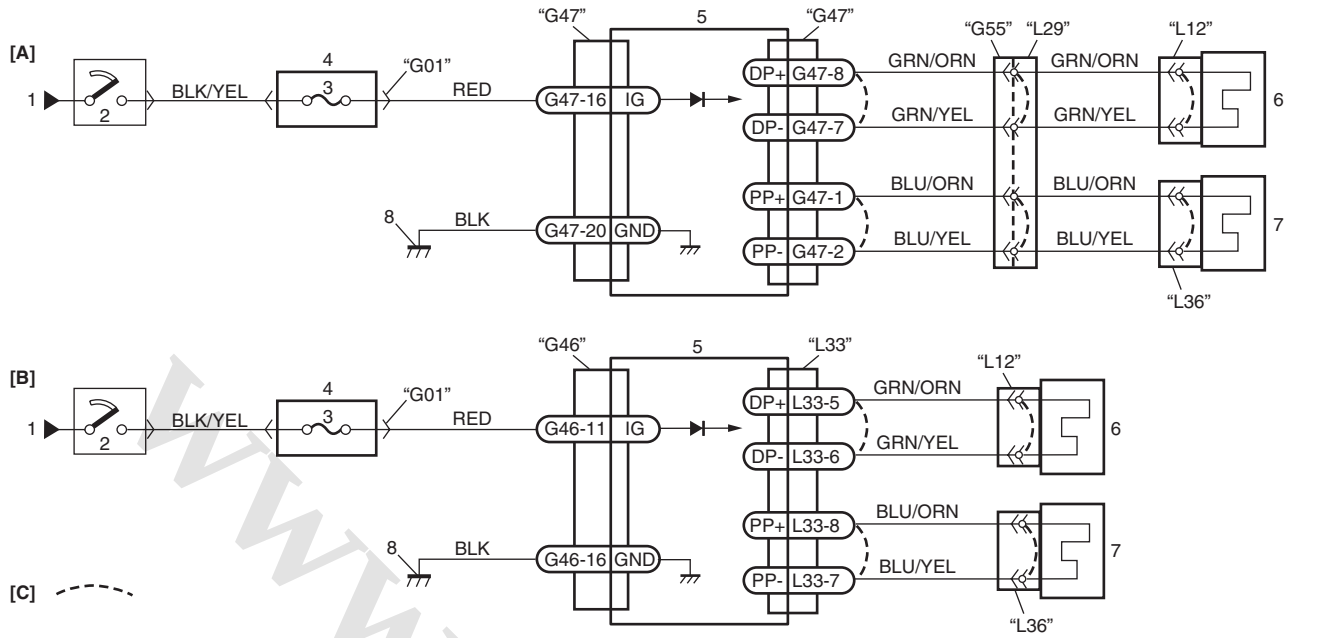


I5JB0A820038-01

| | | | |
|---|---|---|---|
| [A]: Without side-air bag and curtain-air bag | 1. From main fuse | 4. Junction block assembly | 7. Passenger seat belt pretensioner |
| [B]: With side-air bag and curtain-air bag | 2. Ignition switch | 5. SDM | 8. Ground for air bag system |
| [C]: Shorting bar | 3. "A/B" fuse | 6. Driver seat belt pretensioner | |

**⚠ CAUTION**

**Be sure to observe instructions under CAUTION in "Air Bag Diagnostic System Check Flow".**

### DTC Will Set when

The resistance of driver or passenger seat belt pretensioner initiator circuit is above a specified value for specified time.

### Flow Test Description

**Step 1:** Check if malfunction is in seat belt pretensioner.
**Step 2:** Check seat belt pretensioner initiator circuit. (Between "L29" and "L12" or "L29" and "L36")
**Step 3:** Check seat belt pretensioner initiator circuit. (Between "G55" and "G47", "L12" and "L33" or "L36" and "L33")

www.cargeek.ir

www.CarGeek.ir

**DTC Troubleshooting**

| Step | Action | Yes | No |
|---|---|---|---|
| 1 | 1) With ignition switch OFF, remove center pillar lower trim of driver or passenger side and disconnect seat belt pretensioner connector “L12” or “L36” (1).<br>2) Check proper connection to seat belt pretensioner at terminals in “L12” or “L36” connector.<br>3) If OK, then connect special tools (A), (B) and (C) to “L12” or “L36” connector disconnected in Step 1).<br>**Special tool**<br>**(A): 09932–76010**<br>**(B): 09932–75010**<br>**(C): 09932–78310**<br> 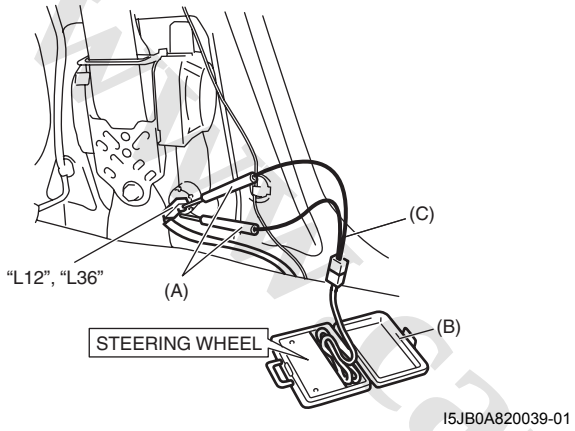 <br><br>4) Check SDM DTC.<br>*With ignition switch ON, is DTC B1051 or B1055 still indicated?* | Without side-air bag and curtain-air bag: go to Step 2.<br>With side-air bag and curtain-air bag: go to Step 3. | Turn ignition switch OFF. Replace seat belt pretensioner referring to “Front Seat Belt Removal and Installation: in Section 8A”. |
| 2 | 1) With ignition switch OFF, disconnect “G55” connector located near the console box.<br>2) Check proper connection to applicable seat belt pretensioner at terminal in “G55” connector.<br>3) If OK, then connect special tools (B) and (D) to “G55” connector.<br>**Special tool**<br>**(B): 09932–75010**<br>**(C): 09932–77320**<br> 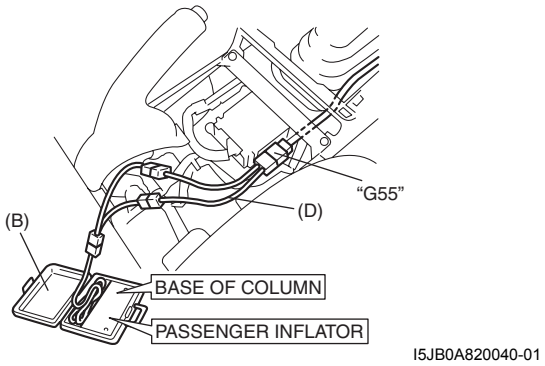 <br><br>4) Check SDM DTC.<br>*With ignition switch ON, is DTC B1051 or B1055 still indicated?* | Go to Step 3. | DTC B1051: High resistance or open wire in “GRN/ORN” or “GRN/YEL” circuit. (Between “L29” and “L12” connectors)<br>DTC B1055: High resistance or open wire in “BLU/ORN” or “BLU/YEL” circuit. (Between “L29” and “L36” connectors) |

www.cargeek.ir

www.CarGeek.ir


| Step | Action | Yes | No |
|---|---|---|---|
| 3 | 1) With ignition switch OFF, disconnect SDM connector “G47” or “L33”.<br>2) Check proper connection to SDM at terminals “G47-7” and “G47-8” or “L33-5” and “L33-6” (for DTC B1051) or terminals “G47-1” and “G47-2” or “L33-7” and “L33-8” (for DTC B1055).<br>3) If OK, release shorting bar in SDM connector inserting release tool (1) included in special tool (A).<br>4) Measure resistance between “G47-7” and “G47-8” (for DTC B1051) or “G47-1” and “G47-2” (for DTC B1055) with connected special tools (B) and (D) [A], or between “L33-5” and “L33-6” (for DTC B1051) or “L33-7” and “L33-8” (for DTC B1055) with connected special tools (A), (B) and (C) [B].<br>**Special tool**<br>**(A): 09932–76010**<br>**(B): 09932–75010**<br>**(C): 09932–78310**<br>**(D): 09932–77320**<br>**[A]**<br> 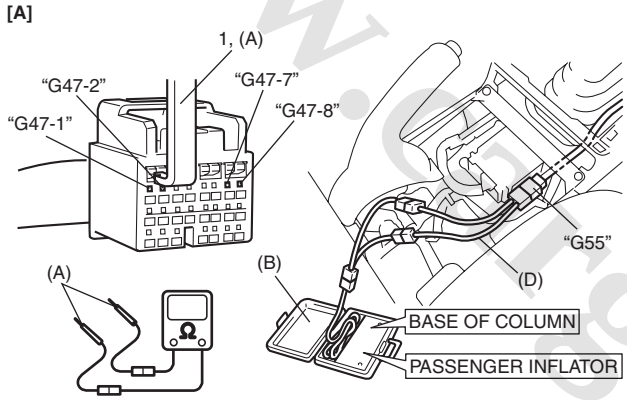 <br><br>**[B]**<br> 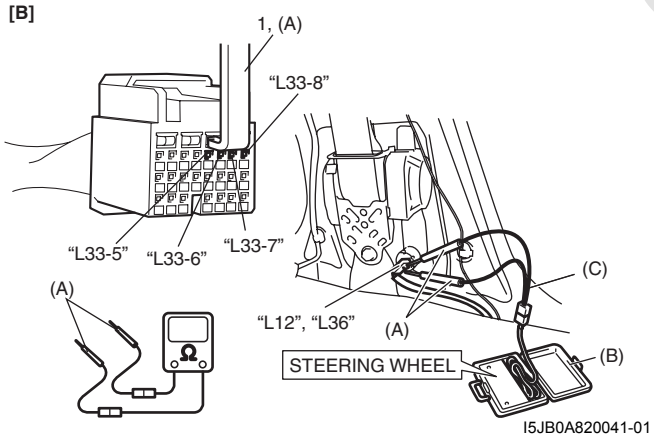 <br><br>*Is resistance 5.5 Ω or less?* | Substitute a known-good SDM and recheck. | DTC B1051: High resistance or open wire in “GRN/ORN” or “GRN/YEL” circuit. (Between “G55” and “G47” connectors or between “L12” and “L33” connectors)<br>DTC B1055: High resistance or open wire in “BLU/ORN” or “BLU/YEL” circuit. (Between “G55” and “G47” connectors or between “L36” and “L33” connectors) |

**NOTE**

**Upon completion of inspection and repair work, perform the following items.**

- **Reconnect all air bag system components and ensure all components are properly mounted.**
- **Clear DTCs referring to “DTC Clearance: ”, if any.**
- **Repeat “Air Bag Diagnostic System Check: ” to confirm that the trouble has been corrected.**

www.cargeek.ir

www.CarGeek.ir

## DTC B1052 / B1056: Driver / Passenger Pretensioner Initiator Circuit Resistance Low

S5JB0A8204027

### Wiring Diagram

Refer to “DTC B1051 / B1055: Driver / Passenger Pretensioner Initiator Circuit Resistance High: ”.

**⚠ CAUTION**

**Be sure to observe instructions under CAUTION in “Air Bag Diagnostic System Check Flow”.**

### DTC Will Set when

The resistance of driver or passenger seat belt pretensioner initiator circuit is below a specified value for specified time.

### Flow Test Description

**Step 1:** Check if malfunction is in seat belt pretensioner.
**Step 2:** Check seat belt pretensioner initiator circuit. (Between “L29” and “L12” or “L29” and “L36”)
**Step 3:** Check seat belt pretensioner initiator circuit. (Between “G55” and “G47”, “L12” and “L33” or “L36” and “L33”)

### DTC Troubleshooting

| Step | Action | Yes | No |
|---|---|---|---|
| 1 | 1) With ignition switch OFF, remove center pillar lower trim of driver or passenger side and disconnect seat belt pretensioner connector “L12” or “L36” (1).<br>2) Check proper connection to seat belt pretensioner at terminals in “L12” or “L36” connector.<br>3) If OK, then connect special tools (A), (B) and (C) to “L12” or “L36” connector disconnected in Step 1).<br>**Special tool**<br>**(A): 09932–76010**<br>**(B): 09932–75010**<br>**(C): 09932–78310**<br> 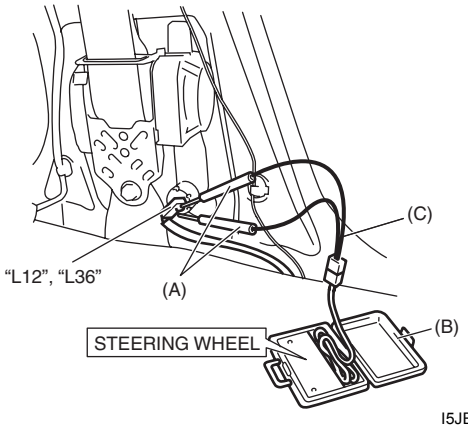 <br><br>I5JB0A820039-01<br>4) Check SDM DTC.<br>*With ignition switch ON, is DTC B1052 or B1056 still indicated?* | Without side-air bag and curtain-air bag: go to Step 2.<br>With side-air bag and curtain-air bag: go to Step 3. | Turn ignition switch OFF. Replace seat belt pretensioner referring to “Front Seat Belt Removal and Installation: in Section 8A”. |

www.cargeek.ir

www.CarGeek.ir


| Step | Action | Yes | No |
|---|---|---|---|
| 2 | 1) With ignition switch OFF, disconnect “G55” connector located near the console box.<br>2) Check proper connection to applicable seat belt pretensioner at terminal in “G55” connector.<br>3) If OK, then connect special tools (B) and (D) to “G55” connector.<br>**Special tool**<br>**(B): 09932–75010**<br>**(D): 09932–77320**<br> 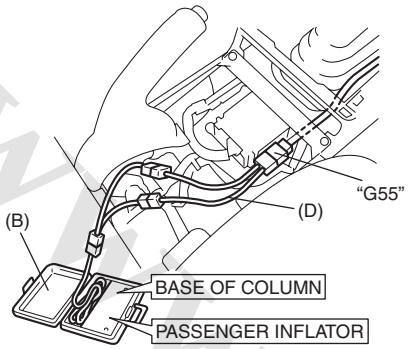 <br><br>I5JB0A820040-01<br>4) Check SDM DTC.<br>*With ignition switch ON, is DTC B1052 or B1056 still indicated?* | Go to Step 3. | DTC B1052: “GRN/ORN” circuit shorted to “GRN/YEL” circuit, “GRN/ORN” circuit or “GRN/YEL” circuit shorted to other circuit. (Between “L29” and “L12” connectors)<br>DTC B1056: “BLU/ORN” circuit shorted to “BLU/YEL” circuit, “BLU/ORN” circuit or “BLU/YEL” circuit shorted to other circuit. (Between “L29” and “L36” connectors) |

www.cargeek.ir

www.CarGeek.ir

| Step | Action | Yes | No |
|---|---|---|---|
| 3 | 1) With ignition switch OFF, disconnect SDM connector “G47” or “L33”.<br>2) Check proper connection to SDM at terminals “G47-7” and “G47-8” or “L33-5” and “L33-6” (for DTC B1052) or terminals “G47-1” and “G47-2” or “L33-7” and “L33-8” (for DTC B1056).<br>3) If OK, release shorting bar in SDM connector inserting release tool (1) included in special tool (A).<br>4) Measure resistance between “G47-7” and “G47-8” (for DTC B1052) or “G47-1” and “G47-2” (for DTC B1056) with connected special tools (B) and (D) [A], or between “L33-5” and “L33-6” (for DTC B1052) or “L33-7” and “L33-8” (for DTC B1056) with connected special tools (A), (B) and (C) [B].<br>**Special tool**<br>**(A): 09932–76010**<br>**(B): 09932–75010**<br>**(C): 09932–78310**<br>**(D): 09932–77320**<br>**[A]**<br> 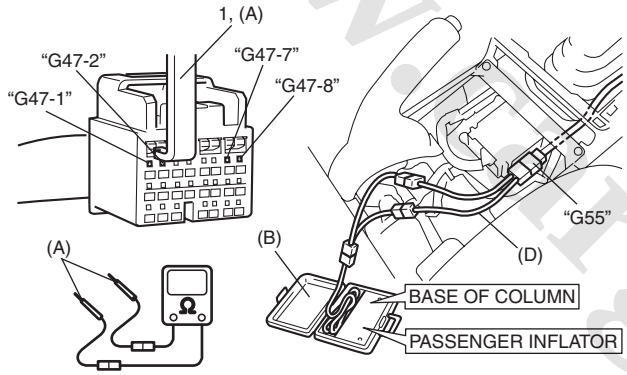 <br><br>**[B]**<br> 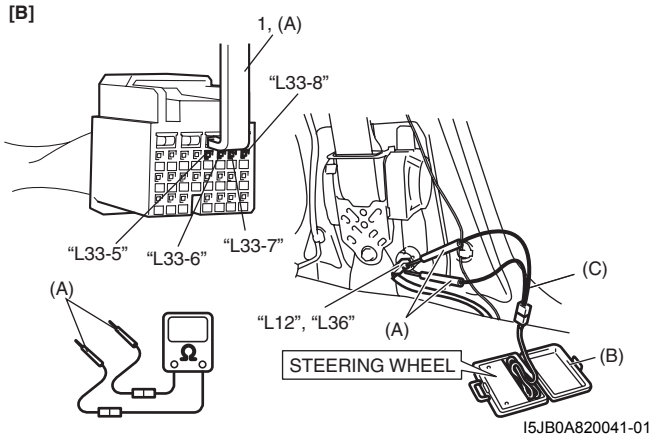 <br><br>*Is resistance 0.65 Ω or more?* | Substitute a known-good SDM and recheck. | DTC B1052: “GRN/ORN” circuit shorted to “GRN/YEL” circuit, “GRN/ORN” circuit or “GRN/YEL” circuit shorted to other circuit. (Between “G55” and “G47” connectors or between “L12” and “L33” connectors)<br>DTC B1056: “BLU/ORN” circuit shorted to “BLU/YEL” circuit, “BLU/ORN” circuit or “BLU/YEL” circuit shorted to other circuit. (Between “G55” and “G47” connectors or between “L36” and “L33” connectors) |

**NOTE**

**Upon completion of inspection and repair work, perform the following items.**

- **Reconnect all air bag system components and ensure all components are properly mounted.**
- **Clear DTCs referring to “DTC Clearance: ”, if any.**
- **Repeat “Air Bag Diagnostic System Check: ” to confirm that the trouble has been corrected.**

www.cargeek.ir

www.CarGeek.ir


## DTC B1053 / B1057: Driver / Passenger Pretensioner Initiator Circuit Short to Ground

S5JB0A8204028

### Wiring Diagram

Refer to “DTC B1051 / B1055: Driver / Passenger Pretensioner Initiator Circuit Resistance High: ”.

**⚠ CAUTION**

**Be sure to observe instructions under CAUTION in “Air Bag Diagnostic System Check Flow”.**

### DTC Will Set when

The voltage measured at driver or passenger seat belt pretensioner initiator circuit is below a specified value for specified time.

### Flow Test Description

**Step 1:** Check if malfunction is in seat belt pretensioner.
**Step 2:** Check seat belt pretensioner initiator circuit. (Between “L29” and “L12” or “L29” and “L36”)
**Step 3:** Check seat belt pretensioner initiator circuit. (Between “G55” and “G47”, “L12” and “L33” or “L36” and “L33”)

### DTC Troubleshooting

| Step | Action | Yes | No |
|---|---|---|---|
| 1 | 1) With ignition switch OFF, remove center pillar lower trim of driver or passenger side and disconnect seat belt pretensioner connector “L12” or “L36” (1).<br>2) Check proper connection to seat belt pretensioner at terminals in “L12” or “L36” connector.<br>3) If OK, then connect special tools (A), (B) and (C) to “L12” or “L36” connector disconnected in Step 1).<br>**Special tool**<br>**(A): 09932–76010**<br>**(B): 09932–75010**<br>**(C): 09932–78310**<br> 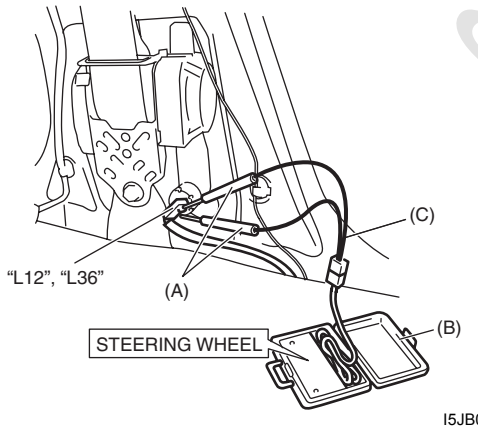 <br><br>I5JB0A820039-01<br>4) Check SDM DTC.<br>*With ignition switch ON, is DTC B1053 or B1057 still indicated?* | Without side-air bag and curtain-air bag: go to Step 2.<br>With side-air bag and curtain-air bag: go to Step 3. | Ignition switch OFF. Replace seat belt pretensioner referring to “Front Seat Belt Removal and Installation: in Section 8A”. |

www.cargeek.ir

www.CarGeek.ir

| Step | Action | Yes | No |
|---|---|---|---|
| 2 | 1) With ignition switch OFF, disconnect “G55” connector located near the console box.<br>2) Check proper connection to applicable seat belt pretensioner at terminal in “G55” connector.<br>3) If OK, then connect special tools (B) and (D) to “G55” connector.<br>**Special tool**<br>**(B): 09932–75010**<br>**(C): 09932–77320**<br> 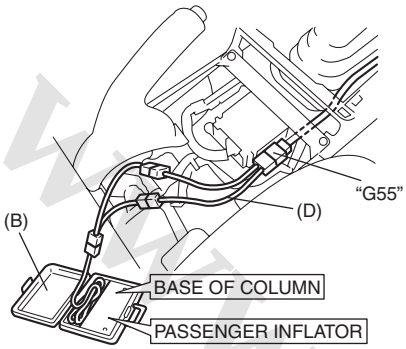 <br><br>I5JB0A820040-01<br>4) Check SDM DTC.<br>*With ignition switch ON, is DTC B1053 or B1057 still indicated?* | Go to Step 3. | DTC B1053: “GRN/ORN” or “GRN/YEL” circuit shorted to ground. (Between “L29” and “L12” connectors)<br>DTC B1057: “BLU/ORN” circuit or “BLU/YEL” circuit shorted to ground. (Between “L29” and “L36” connectors) |

www.cargeek.ir

www.cargeek.ir

| Step | Action | Yes | No |
|---|---|---|---|
| 3 | 1) With ignition switch OFF, disconnect special tools (A), (B) and (C) or (D) and SDM connector “G47” or “L33”.<br>2) Release shorting bar in SDM connector inserting release tool (1) included in special tool (A).<br>3) Measure resistance between “G47-7” and body ground, “G47-8” and body ground (for DTC B1053) or “G47-1” and body ground, “G47-2” and body ground (for DTC B1057) [A], or between “L33-5” and body ground, “L33-6” and body ground (for DTC B1053) or “L33-7” and body ground, “L33-8” and body ground (for DTC B1057) [B].<br>**Special tool**<br>**(A): 09932–76010**<br>**(B): 09932–75010**<br>**(C): 09932–78310**<br>**(D): 09932–77320**<br> 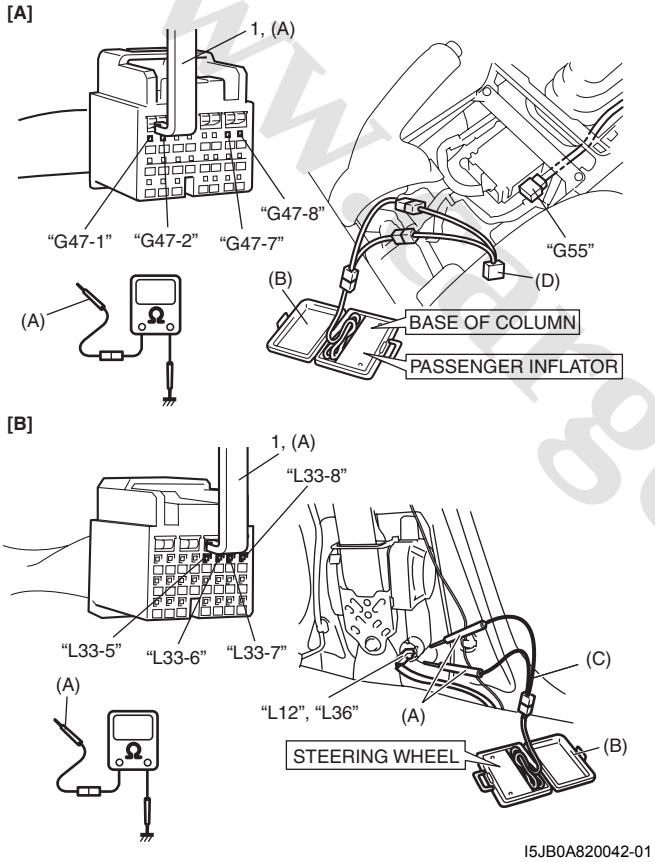 <br><br>*Is resistance infinity?* | Substitute a known-good SDM and recheck. | DTC B1053: “GRN/ORN” circuit or “GRN/YEL” circuit shorted to ground. (Between “G55” and “G47” connectors or between “L12” and “L33” connectors)<br>DTC B1057: “BLU/ORN” circuit or “BLU/YEL” circuit shorted to ground. (Between “G55” and “G47” connectors or between “L36” and “L33” connectors) |

**NOTE**

**Upon completion of inspection and repair work, perform the following items.**

- **Reconnect all air bag system components and ensure all components are properly mounted.**
- **Clear DTCs referring to “DTC Clearance: ”, if any.**
- **Repeat “Air Bag Diagnostic System Check: ” to confirm that the trouble has been corrected.**

www.cargeek.ir

www.CarGeek.ir

## DTC B1054 / B1058: Driver / Passenger Pretensioner Initiator Circuit Short to Power Circuit

S5JB0A8204029

### Wiring Diagram

Refer to “DTC B1051 / B1055: Driver / Passenger Pretensioner Initiator Circuit Resistance High: ”.

**⚠ CAUTION**

**Be sure to observe instructions under CAUTION in “Air Bag Diagnostic System Check Flow”.**

### DTC Will Set when

The voltage measured at driver or passenger seat belt pretensioner initiator circuit is above a specified value for specified time.

### Flow Test Description

**Step 1:** Check if malfunction is in seat belt pretensioner.
**Step 2:** Check seat belt pretensioner initiator circuit. (Between “L29” and “L12” or “L29” and “L36”)
**Step 3:** Check seat belt pretensioner initiator circuit. (Between “G55” and “G47”, “L12” and “L33” or “L36” and “L33”)

### DTC Troubleshooting

| Step | Action | Yes | No |
|---|---|---|---|
| 1 | 1) With ignition switch OFF, remove center pillar lower trim of driver or passenger side and disconnect seat belt pretensioner connector “L12” and “L36” (1).<br>2) Check proper connection to seat belt pretensioner at terminals in “L12” or “L36” connector.<br>3) If OK, then connect special tools (A), (B) and (C) to “L12” or “L36” connector disconnected in Step 1).<br>**Special tool**<br>**(A): 09932–76010**<br>**(B): 09932–75010**<br>**(C): 09932–78310**<br> 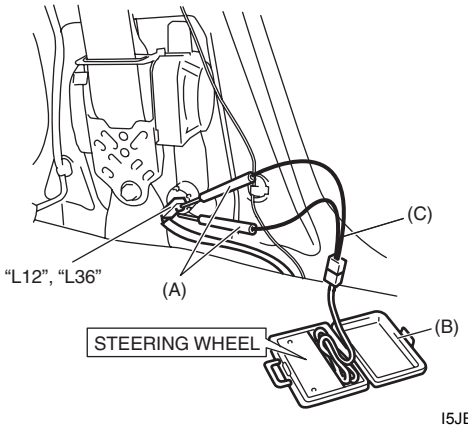 <br><br>I5JB0A820039-01<br>4) Check SDM DTC.<br>*With ignition switch ON, is DTC B1054 or B1058 still indicated?* | Without side-air bag and curtain-air bag: go to Step 2.<br>With side-air bag and curtain-air bag: go to Step 3. | Turn ignition switch OFF. Replace seat belt pretensioner referring to “Front Seat Belt Removal and Installation: in Section 8A”. |

www.cargeek.ir

www.CarGeek.ir


| Step | Action | Yes | No |
|---|---|---|---|
| 2 | 1) With ignition switch OFF, disconnect “G55” connector located near the console box.<br>2) Check proper connection to applicable seat belt pretensioner at terminal in “G55” connector.<br>3) If OK, then connect special tools (B) and (D) to “G55” connector.<br>**Special tool**<br>**(B): 09932–75010**<br>**(D): 09932–77320**<br> 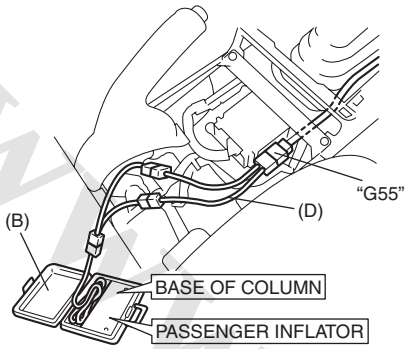 <br><br>I5JB0A820040-01<br>4) Check SDM DTC.<br>*With ignition switch ON, is DTC B1054 or B1058 still indicated?* | Go to Step 3. | DTC B1054: “GRN/ORN” or “GRN/YEL” circuit shorted to power supply circuit. (Between “L29” and “L12” connectors)<br>DTC B1058: “BLU/ORN” circuit or “BLU/YEL” circuit shorted to power supply circuit. (Between “L29” and “L36” connectors) |

www.cargeek.ir
www.cargeek.ir

www.CarGeek.ir

| Step | Action | Yes | No |
|---|---|---|---|
| 3 | 1) With ignition switch OFF, disconnect special tools (A), (B) and (C) or (D) and SDM connector “G47” or “L33”.<br>2) Release shorting bar in SDM connector inserting release tool (1) included in special tool (A).<br>3) Measure voltage between “G47-7” and body ground, “G47-8” and body ground (for DTC B1053) or “G47-1” and body ground, “G47-2” and body ground (for DTC B1057) [A], or between “L33-5” and body ground, “L33-6” and body ground (for DTC B1053) or “L33-7” and body ground, “L33-8” and body ground (for DTC B1057) [B].<br>**Special tool**<br>**(A): 09932–76010**<br>**(B): 09932–75010**<br>**(C): 09932–78310**<br>**(D): 09932–77320**<br> 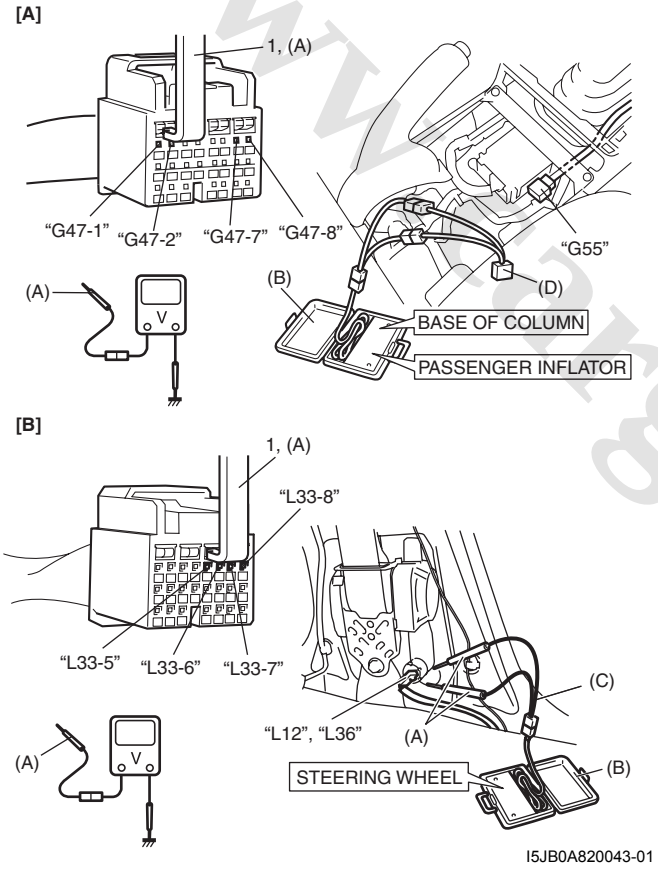 <br><br>*With ignition switch ON, is voltage 4 V or less?* | Substitute a known-good SDM and recheck. | DTC B1054: “GRN/ORN” circuit or “GRN/YEL” circuit shorted to power supply circuit. (Between “G55” and “G47” connectors or between “L12” and “L33” connectors)<br>DTC B1058: “BLU/ORN” circuit or “BLU/YEL” circuit shorted to power supply circuit. (Between “G55” and “G47” connectors or between “L36” and “L33” connectors) |

**NOTE**

**Upon completion of inspection and repair work, perform the following items.**

- **Reconnect all air bag system components and ensure all components are properly mounted.**
- **Clear DTCs referring to “DTC Clearance: ”, if any.**
- **Repeat “Air Bag Diagnostic System Check: ” to confirm that the trouble has been corrected.**

www.cargeek.ir

www.CarGeek.ir


## DTC B1073 / B1077: Driver / Passenger Forward-Sensor Circuit Short to Ground

S5JB0A8204036

### Wiring Diagram

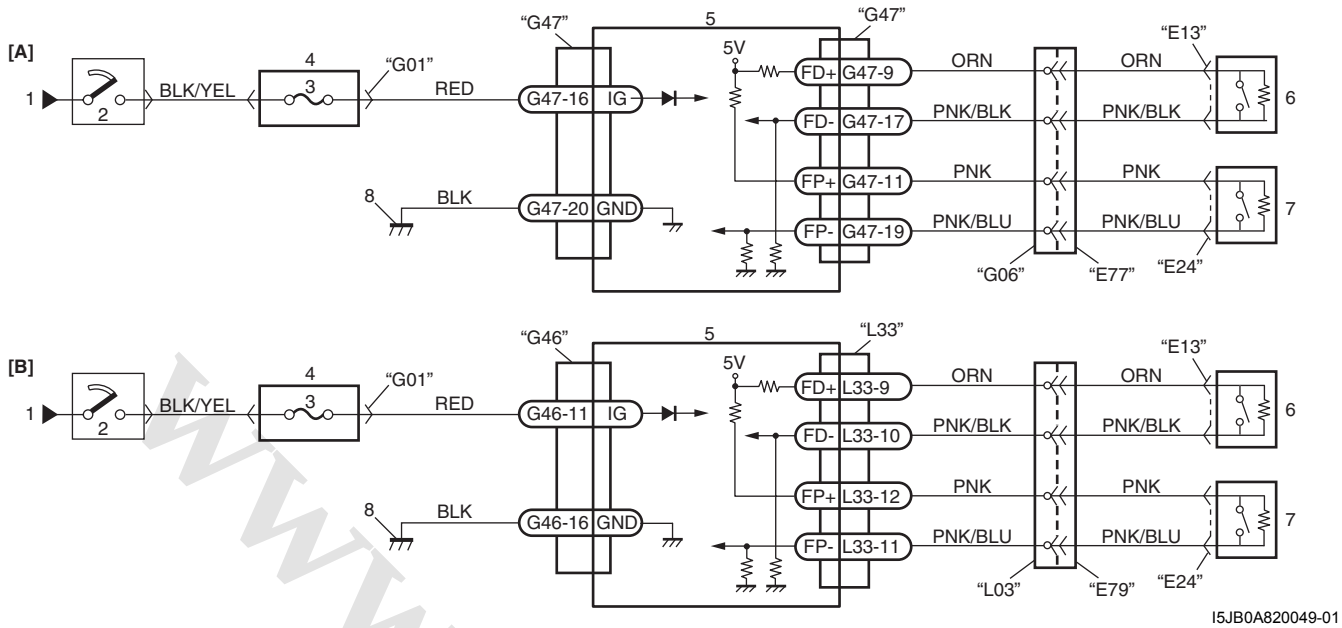


I5JB0A820049-01

| | | |
|---|---|---|
| [A]: Without side-air bag and curtain-air bag | 3. "A/B" fuse | 7. Passenger forward-sensor |
| [B]: With side-air bag and curtain-air bag | 4. Junction block assembly | 8. Ground for air bag system |
| 1. From main fuse | 5. SDM | |
| 2. Ignition switch | 6. Forward-sensor | |

### ⚠ CAUTION

**Be sure to observe instructions under CAUTION in "Air Bag Diagnostic System Check Flow".**

### DTC Will Set when

Forward-sensor abnormal signal is detected by SDM.

### Flow Test Description

**Step 1:** Check for short circuit between forward-sensor circuit and ground.
**Step 2:** Check if malfunction is in forward-sensor.

www.cargeek.ir

www.CarGeek.ir

**DTC Troubleshooting**

| Step | Action | Yes | No |
|---|---|---|---|
| 1 | 1) Turn ignition switch to OFF position.<br>2) Disconnect forward-sensor connector “E13” or “E24”.<br>3) Disconnect SDM connector “G47” or “L33”.<br>4) Check proper connection to SDM connector at terminals “G47-9” and “G47-17” or “L33-9” and “L33-10” (for DTC B1073) or terminals “G47-11” and “G47-19” or “L33-11” and “L33-12” (for DTC B1077).<br>5) Measure resistance between “G47-9” and body ground, “G47-17” and body ground (for DTC B1073) or “G47-11” and body ground, “G47-19” and body ground (for DTC B1077) [A], or between “L33-9” and body ground, “L33-10” and body ground (for DTC B1073) or “L33-11” and body ground, “L33-12” and body ground (for DTC B1077) [B].<br>**Special tool**<br>**(A): 09932–76010**<br> 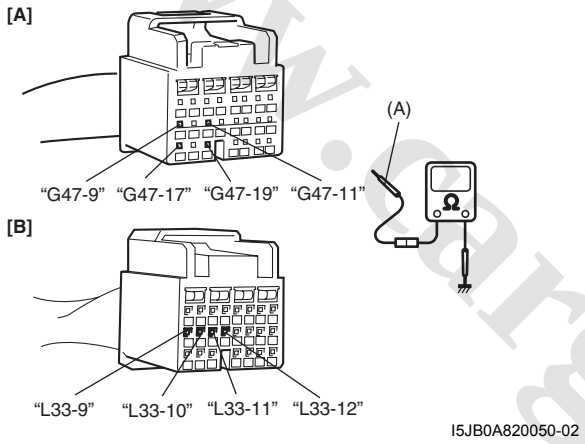 <br><br>*Is each measured resistance infinity?* | Go to Step 2. | For DTC B1073: “ORN” circuit or “PNK/BLK” circuit shorted to ground.<br>For DTC B1077: “PNK” circuit or “PNK/BLU” circuit shorted to ground. |
| 2 | 1) Check forward-sensor referring to “Forward-Sensor Inspection: ”.<br>*Is it in good condition?* | Substitute a known-good SDM and recheck. | Replace forward-sensor referring to “Forward-Sensor Removal and Installation: ”. If DTC still exists, substitute a known-good SDM and recheck. |

**NOTE**

**Upon completion of inspection and repair work, perform the following items.**

- **Reconnect all air bag system components and ensure all components are properly mounted.**
- **Clear DTCs referring to “DTC Clearance: ”, if any.**
- **Repeat “Air Bag Diagnostic System Check: ” to confirm that the trouble has been corrected.**

www.cargeek.ir

www.CarGeek.ir


## DTC B1074 / B1078: Driver / Passenger Forward-Sensor Circuit Short to Power Circuit or Open

S5JB0A8204037

### Wiring Diagram

Refer to “DTC B1073 / B1077: Driver / Passenger Forward-Sensor Circuit Short to Ground: ”.

**⚠ CAUTION**

**Be sure to observe instructions under CAUTION in “Air Bag Diagnostic System Check Flow”.**

### DTC Will Set when

Forward-sensor abnormal signal is detected by SDM.

### Flow Test Description

**Step 1:** Check for open circuit in forward-sensor circuit.
**Step 2:** Check for short circuit between forward-sensor circuit and power supply circuit.
**Step 3:** Check if malfunction is in forward-sensor.

### DTC Troubleshooting

| Step | Action | Yes | No |
|---|---|---|---|
| 1 | 1) Turn ignition switch to OFF position.<br>2) Disconnect forward-sensor connector “E13” or “E24”.<br>3) Disconnect SDM connector “G47” or “L33”.<br>4) Check proper connection to SDM connector at terminals “G47-9” and “G47-17” or “L33-9” and “L33-10” (for DTC B1074), or terminals “G47-11” and “G47-19” or “L33-11” and “L33-12” (for DTC B1078).<br>5) Check proper connection to forward-sensor connector at terminals “E13-1” and “E13-2” or “E24-1” and “E24-2”.<br>6) Using service wire (1), connect “E13-1” and “E13-2” terminal (for DTC B1074) or “E24-1” and “E24-2” terminal (for DTC B1078) of forward-sensor connector.<br>7) Measure resistance between “G47-9” and “G47-17” (for DTC B1074) or “G47-11” and “G47-19” (for DTC B1078) [A], or between “L33-9” and “L33-10” (for DTC B1074) or “L33-11” and “L33-12” (for DTC B1078) [B].<br>**Special tool**<br>**(A): 09932–76010**<br> 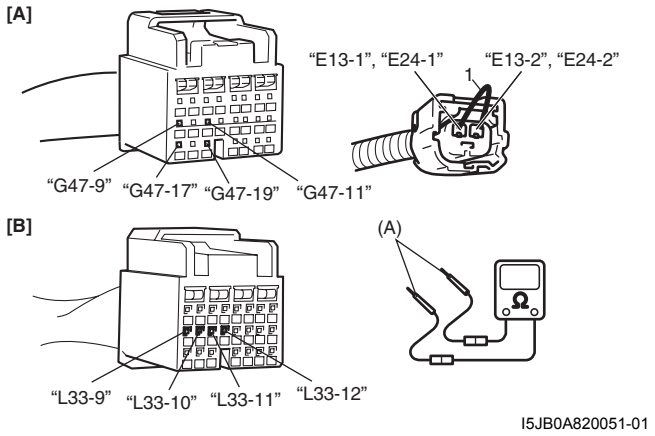 <br><br>*Is each measured resistance 1 Ω or less?* | Go to Step 2. | For DTC B1074: High resistance or open wire in “ORN” circuit or “PNK/BLK” circuit.<br>For DTC B1078: High resistance or open wire in “PNK” circuit or “PNK/BLU” circuit. |

www.cargeek.ir

www.CarGeek.ir

| Step | Action | Yes | No |
|---|---|---|---|
| 2 | 1) Disconnect service wire from “E13” or “E24” connector.<br>2) Measure voltage between “G47-9” and body ground, “G47-17” and body ground (for DTC B1074) or “G47-11” and body ground, “G47-19” and body ground (for DTC B1078) [A], or between “L33-9” and body ground, “L33-10” and body ground (for DTC B1074) or “L33-11” and body ground, “L33-12” and body ground (for DTC B1078) [B].<br>**Special tool**<br>**(A): 09932–76010**<br> 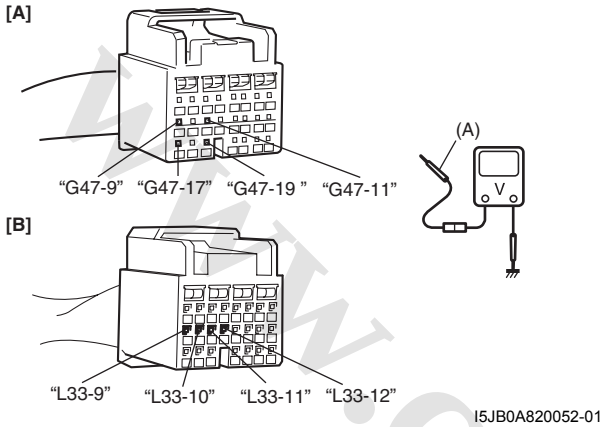 <br><br>*With ignition switch ON, is each measured value 1 V or less?* | Go to Step 3. | For DTC B1074: “ORN” circuit or “PNK/BLK” circuit shorted to power circuit.<br>For DTC B1078: “PNK” circuit or “PNK/BLU” circuit shorted to power circuit. |
| 3 | 1) Check forward-sensor referring to “Forward-Sensor Inspection: ”.<br>*Is it in good condition?* | Substitute a known-good SDM and recheck. | Replace forward-sensor referring to “Forward-Sensor Removal and Installation: ”. If DTC still exists, substitute a known-good SDM and recheck. |

**NOTE**

**Upon completion of inspection and repair work, perform the following items.**

- **Reconnect all air bag system components and ensure all components are properly mounted.**
- **Clear DTCs referring to “DTC Clearance: ”, if any.**
- **Repeat “Air Bag Diagnostic System Check: ” to confirm that the trouble has been corrected.**

www.cargeek.ir

www.CarGeek.ir


## DTC B1085: Wrong Side-Sensor ID

S5JB0A8204042

### DTC Will Set when

SDM receives wrong ID (Part No.) signal from side-sensor.

### DTC Troubleshooting

1) Turn ignition switch OFF.
2) Replace driver or passenger side-sensor referring to “Side-Sensor Removal and Installation: ”.
3) Repeat “Air Bag Diagnostic System Check: ”.

**NOTE**

**Upon completion of inspection and repair work, perform the following items.**

- **Reconnect all air bag system components and ensure all components are properly mounted.**
- **Clear DTCs referring to “DTC Clearance: ”, if any.**
- **Repeat “Air Bag Diagnostic System Check: ” to confirm that the trouble has been corrected.**

## DTC B1086 / B1096: Left / Right Side-Sensor Performance Problem

S5JB0A8204038

### DTC Will Set when

SDM receives internal fault signal from side-sensor.

### DTC Troubleshooting

1) Turn ignition switch OFF.
2) Replace left or right side-sensor referring to “Side-Sensor Removal and Installation: ”.
3) Repeat “Air Bag Diagnostic System Check: ”.

**NOTE**

**Upon completion of inspection and repair work, perform the following items.**

- **Reconnect all air bag system components and ensure all components are properly mounted.**
- **Clear DTCs referring to “DTC Clearance: ”, if any.**
- **Repeat “Air Bag Diagnostic System Check: ” to confirm that the trouble has been corrected.**

## DTC B1087 / B1097: Left / Right Side-Sensor Communication Error

S5JB0A8204039

### Wiring Diagram

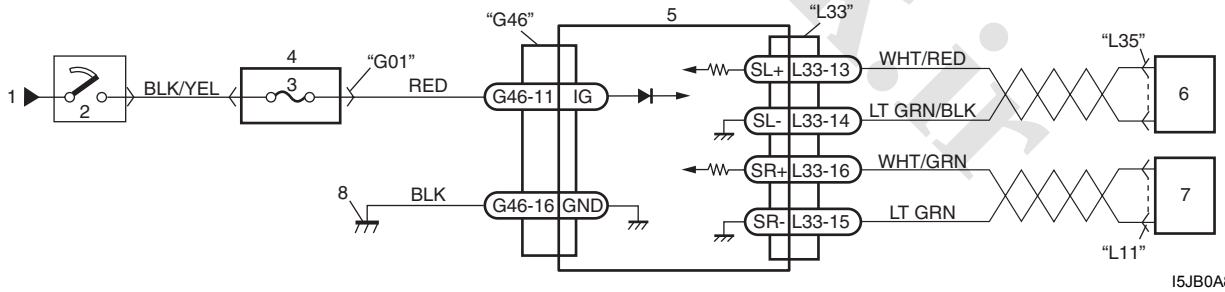


I5JB0A820053-02

| | | |
|---|---|---|
| 1. From main fuse | 4. Junction block assembly | 7. Right side-sensor |
| 2. Ignition switch | 5. SDM | 8. Ground for air bag system |
| 3. “A/B” fuse | 6. Left side-sensor | |

**⚠ CAUTION**

**Be sure to observe instructions under CAUTION in “Air Bag Diagnostic System Check Flow”.**

www.cargeek.ir

 www.CarGeek.ir

**DTC Will Set when**
Side-sensor abnormal signal is detected by SDM.

**Flow Test Description**
**Step 1:** Check for open circuit in forward sensor circuit.
**Step 2:** Check for short circuit between forward sensor circuit and ground.
**Step 3:** Check for short circuit between forward sensor circuit and power supply circuit.
**Step 4:** Check if malfunction is in forward sensor.

**DTC Troubleshooting**

| Step | Action | Yes | No |
|---|---|---|---|
| 1 | 1) Disconnect side-sensor connector “L35” or “L11”.<br>2) Disconnect SDM connector “L33”.<br>3) Check proper connection to SDM connector at terminals “L33-13” and “L33-14” or “L33-15” and “L33-16”.<br>4) Check proper connection to side-sensor connector at terminals “L35-1” and “L35-2” or “L11-1” and “L11-2”.<br>5) Using service wire (1), connect “L35-1” and “L35-2” terminal (for DTC B1087) or “L11-1” and “L11-2” terminal (for DTC B1097) of side-sensor connector.<br>6) Measure resistance between terminals “L33-13” and “L33-14” (for DTC B1087) or terminals “L33-15” and “L33-16” (for DTC B1097) of SDM connector.<br>**Special tool**<br>**(A): 09932–76010**<br> 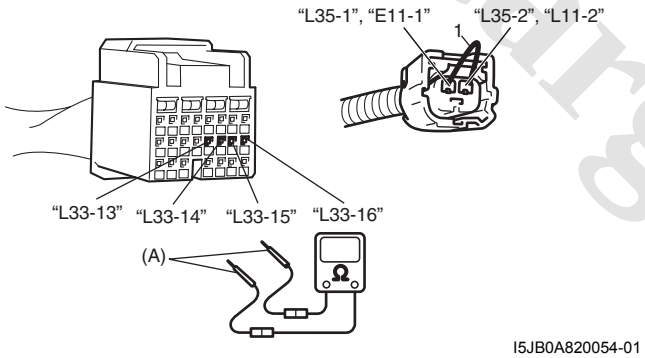 <br><br>*Is each measured resistance 1 Ω or less?* | Go to Step 2 | For DTC B1087: High resistance or open wire in “WHT/RED” circuit or “LT GRN/BLK” circuit.<br>For DTC B1097: High resistance or open wire in “WHT/GRN” circuit or “LT GRN” circuit. |
| 2 | Measure resistance between “L33-13” terminal and body ground, and “L33-14” terminal and body ground (for DTC B1087) or between “L33-15” terminal and body ground, and “L33-16” terminal and body ground (for DTC B1097).<br>**Special tool**<br>**(A): 09932–76010**<br> 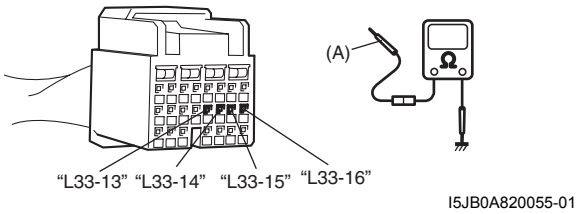 <br><br>*Is each measured resistance infinity?* | Go to Step 3. | For DTC B1087: “WHT/RED” circuit or “LT GRN/BLK” circuit shorted to ground.<br>For DTC B1087: “WHT/GRN” circuit or “LT GRN” circuit shorted to ground. |

www.cargeek.ir

www.CarGeek.ir


| Step | Action | Yes | No |
|---|---|---|---|
| 3 | Check side-sensor referring to “Side-Sensor Inspection: ”.<br><br>*Is it in good condition?* | Substitute a known-good SDM and recheck. | Replace side-sensor referring to “Side-Sensor Removal and Installation: ”. If DTC still exists, substitute a known-good SDM and recheck. |

**NOTE**

**Upon completion of inspection and repair work, perform the following items.**

- **Reconnect all air bag system components and ensure all components are properly mounted.**
- **Clear DTCs referring to “DTC Clearance: ”, if any.**
- **Repeat “Air Bag Diagnostic System Check: ” to confirm that the trouble has been corrected.**

## DTC B1321 / B1325: Left / Right Side-Air Bag Initiator Circuit Resistance High

S5JB0A8204030

### Wiring Diagram

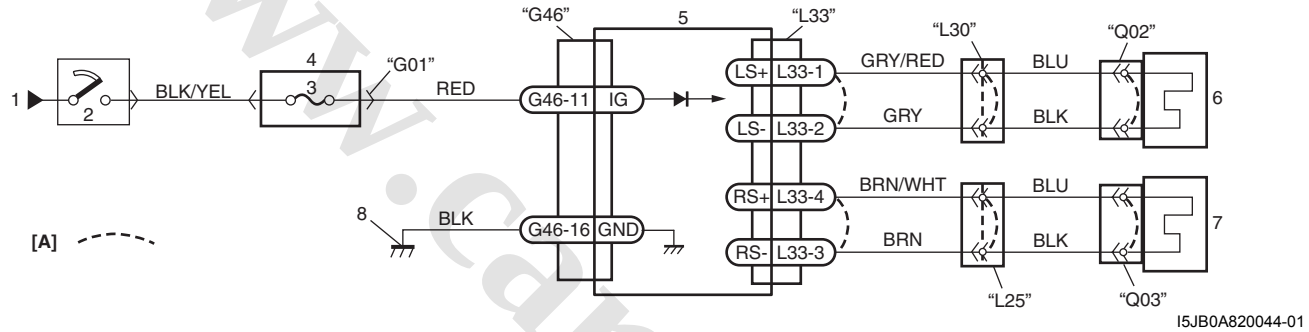


I5JB0A820044-01

| | | |
|---|---|---|
| [A]: Shorting bar | 3. “A/B” fuse | 6. Left side-air bag (inflator) module |
| 1. From main fuse | 4. Junction block assembly | 7. Right side-air bag (inflator) module |
| 2. Ignition switch | 5. SDM | 8. Ground for air bag system |

**⚠ CAUTION**

**Be sure to observe instructions under CAUTION in “Air Bag Diagnostic System Check Flow”.**

### DTC Will Set when

The combined resistance of the side-air bag (inflator) module (left or right), harness wiring and connector terminal contact is above a specified value for specified time.

### Flow Test Description

**Step 1:** Check whether malfunction is in side-air bag (inflator) module.
**Step 2:** Check side-air bag initiator circuit in floor harness.
**Step 3:** Check side-air bag initiator circuit in seat harness.

www.cargeek.ir

www.CarGeek.ir

**DTC Troubleshooting**

| Step | Action | Yes | No |
|---|---|---|---|
| 1 | 1) With ignition switch OFF, disconnect side-air bag (inflator) module connector under front seat cushion.<br>2) Check proper connection to left or right side-air bag (inflator) module at terminals in “L25” or “L30” connector.<br>3) If OK, then connect special tools (B) and (C) to side-air bag (inflator) module connector disconnected at the Step 1).<br>**Special tool**<br>**(B): 09932–75010**<br>**(C): 09932–78340**<br> 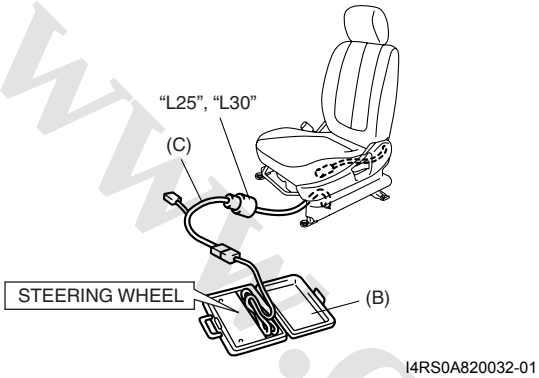 <br><br>4) Check SDM DTC.<br>*With ignition switch ON, is DTC B1321 or B1325 still indicated?* | Go to Step 2. | Go to Step 3. |

www.cargeek.ir

www.CarGeek.ir


| Step | Action | Yes | No |
|---|---|---|---|
| 2 | 1) With ignition switch OFF, disconnect SDM connector “L33”.<br>2) Check proper connection to SDM at terminals “L33-1” and “L33-2” or “L33-3” and “L33-4”.<br>3) If OK, release shorting bar in SDM connector inserting release tool (1) included in special tool (A).<br>4) Measure resistance between “L33-1” and “L33-2” terminals (for DTC B1321) or “L33-3” and “L33-4” terminals (for DTC B1325) with connected special tool (B) and (C).<br>**Special tool**<br>**(A): 09932–76010**<br>**(B): 09932–75010**<br>**(C): 09932–78340**<br> 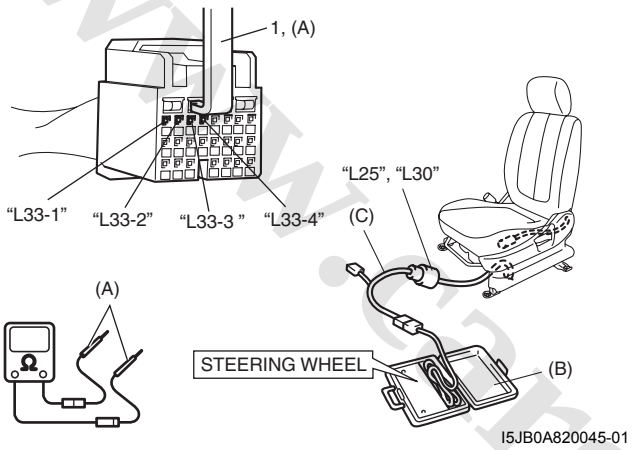 <br><br>*Is resistance 5.5 Ω or less?* | Substitute a known-good SDM and recheck. | DTC B1321: Repair high resistance or open in “GRY/RED” or “GRY” wire circuit in floor harness.<br>DTC B1325: Repair high resistance or open in “BRN/WHT” or “BRN” wire circuit in floor harness. |

www.cargeek.ir

www.CarGeek.ir

| Step | Action | Yes | No |
|---|---|---|---|
| 3 | 1) With ignition switch OFF, disconnect special tools (B) and (C) then reconnect connector “L25” or “L30”.<br>2) Disconnect side-air bag (inflator) module connector “Q02” or “Q03” from side-air bag (inflator) module.<br>3) Check proper connection to side-air bag (inflator) module at terminal in connector.<br>4) If OK, then connect special tools (A), (B) and (C) to side-air bag (inflator) connector.<br>**Special tool**<br>**(A): 09932–76010**<br>**(B): 09932–75010**<br>**(D): 09932–78310**<br> 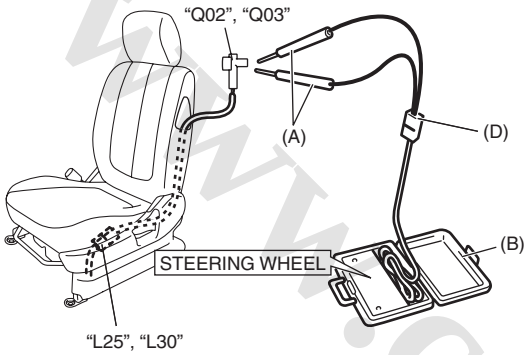 <br><br>I5JB0A820046-02<br>5) Check SDM DTC.<br>*With ignition switch ON, is DTC B1321 or B1325 still indicated?* | DTC B1321: Repair high resistance or open in “GRY/RED” or “GRY” wire circuit in seat harness.<br>DTC B1325: Repair high resistance or open in “BRN/WHT” or “BRN” wire circuit in seat harness. | Replace side-air bag (inflator) module referring to “Side-Air Bag (Inflator) Module Removal and Installation: ”. |

**NOTE**

**Upon completion of inspection and repair work, perform the following items.**

- **Reconnect all air bag system components, ensure all components are properly mounted.**
- **Clear DTCs referring to “DTC Clearance: ”, if any.**
- **Repeat “Air Bag Diagnostic System Check: ” to confirm that the trouble has been corrected.**

www.cargeek.ir

www.CarGeek.ir


## DTC B1322 / B1326: Left / Right Side-Air Bag Initiator Circuit Resistance Low

S5JB0A8204031

### Wiring Diagram

Refer to “DTC B1321 / B1325: Left / Right Side-Air Bag Initiator Circuit Resistance High: ”.

**⚠ CAUTION**

**Be sure to observe instructions under CAUTION in “Air Bag Diagnostic System Check Flow”.**

### DTC Will Set when

The combined resistance of the side-air bag (inflator) module (left or right), harness wiring and connector terminal contact is below a specified value for specified time.

### Flow Test Description

**Step 1:** Check whether malfunction is in side-air bag (inflator) module.
**Step 2:** Check side-air bag initiator circuit in floor harness.
**Step 3:** Check side-air bag initiator circuit in seat harness.

### DTC Troubleshooting

| Step | Action | Yes | No |
|---|---|---|---|
| 1 | 1) With ignition switch OFF, disconnect side-air bag (inflator) module connector under front seat cushion.<br>2) Check proper connection to left or right side-air bag (inflator) module at terminals in “L25” or “L30” connector.<br>3) If OK, then connect special tools (B) and (C) to side-air bag (inflator) module connector disconnected at the Step 1.<br>**Special tool**<br>**(B): 09932–75010**<br>**(C): 09932–78340**<br> 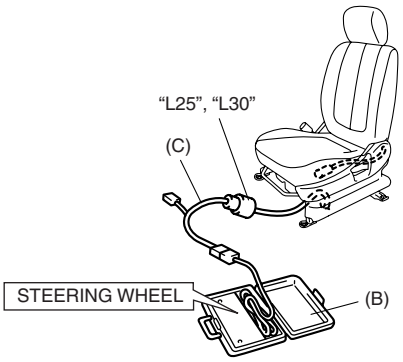 <br><br>I4RS0A820032-01<br>4) Check SDM DTC.<br>*With ignition switch ON, is DTC B1322 or B1326 still indicated?* | Go to Step 2. | Go to Step 3. |

www.cargeek.ir

www.CarGeek.ir

| Step | Action | Yes | No |
|---|---|---|---|
| 2 | 1) With ignition switch OFF, disconnect SDM connector “L33”.<br>2) Check proper connection to SDM at terminals “L33-1” and “L33-2” or “L33-3” and “L33-4”.<br>3) If OK, release shorting bar in SDM connector inserting release tool (1) included in special tool (A).<br>4) Measure resistance between “L33-1” and “L33-2” terminals (for DTC B1322) or “L33-3” and “L33-4” terminals (for DTC B1326) with connected special tools (B) and (C).<br>**Special tool**<br>**(A): 09932–76010**<br>**(B): 09932–75010**<br>**(C): 09932–78340**<br> 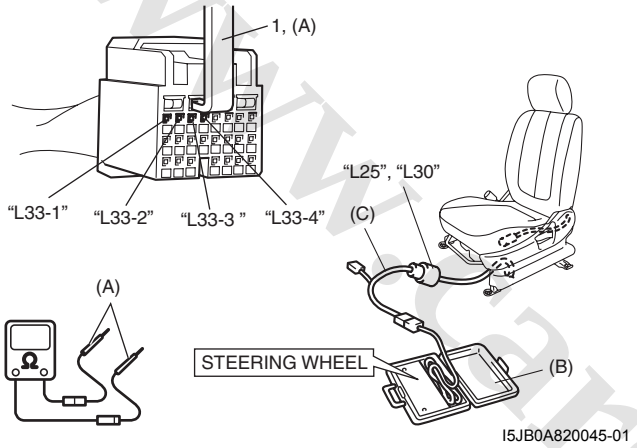 <br><br>*Is resistance 0.65 Ω or more?* | Substitute a known-good SDM and recheck. | DTC B1322: Repair short from “GRY/RED” wire circuit to “GRY” wire circuit or from “GRY/RED” or “GRY” wire circuit to other wire circuit in floor harness.<br>DTC B1326: Repair short from “BRN/WHT” wire circuit to “BRN” wire circuit or from “BRN/WHT” or “BRN” wire circuit to other wire circuit in floor harness. |

www.cargeek.ir

www.CarGeek.ir


| Step | Action | Yes | No |
|---|---|---|---|
| 3 | 1) With ignition switch OFF, disconnect special tools (B) and (C) then reconnect connector “L25” or “L30”.<br>2) Disconnect side-air bag (inflator) module connector “Q02” or “Q03” from side-air bag (inflator) module.<br>3) Check proper connection to side-air bag (inflator) module at terminal in connector.<br>4) If OK, then connect special tools (A), (B) and (C) to side-air bag (inflator) connector.<br>**Special tool**<br>**(A): 09932–76010**<br>**(B): 09932–75010**<br>**(D): 09932–78310**<br> 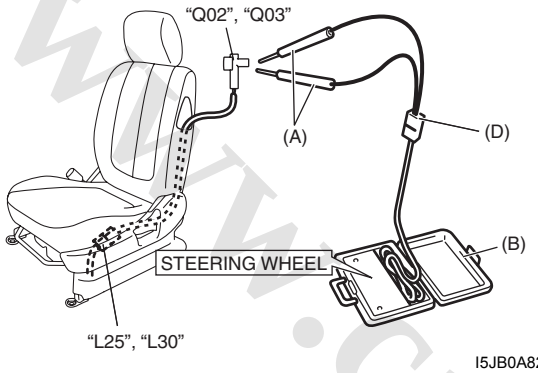 <br><br>I5JB0A820046-02<br>5) Check SDM DTC.<br>*With ignition switch ON, is DTC B1322 or B1326 still indicated?* | DTC B1322: Repair short from “GRY/RED” wire circuit to “GRY” wire circuit in seat harness or from “GRY/RED” or “GRY” wire circuit to other wire circuit.<br>DTC B1326: Repair short from “BRN/WHT” wire circuit to “BRN” wire circuit in seat harness or from “BRN/WHT” or “BRN” wire circuit to other wire circuit. | Replace side-air bag (inflator) module referring to “Side-Air Bag (Inflator) Module Removal and Installation: ”. |

**NOTE**

**Upon completion of inspection and repair work, perform the following items.**

- **Reconnect all air bag system components, ensure all components are properly mounted.**
- **Clear DTCs referring to “DTC Clearance: ”, if any.**
- **Repeat “Air Bag Diagnostic System Check: ” to confirm that the trouble has been corrected.**

www.cargeek.ir

www.CarGeek.ir

## DTC B1323 / B1327: Left / Right Side-Air Bag Initiator Circuit Short to Ground

S5JB0A8204032

### Wiring Diagram

Refer to “DTC B1321 / B1325: Left / Right Side-Air Bag Initiator Circuit Resistance High: ”.

**⚠ CAUTION**

**Be sure to observe instructions under CAUTION in “Air Bag Diagnostic System Check Flow”.**

### DTC Will Set when

The voltage measured at side-air bag (left or right) initiator circuit is below a specified value for specified time.

### Flow Test Description

**Step 1:** Check whether malfunction is in side-air bag (inflator) module.
**Step 2:** Check side-air bag initiator circuit in floor harness.
**Step 3:** Check side-air bag initiator circuit in seat harness.

### DTC Troubleshooting

| Step | Action | Yes | No |
|---|---|---|---|
| 1 | 1) With ignition switch OFF, disconnect side-air bag (inflator) module connector under front seat cushion.<br>2) Check proper connection to left or right side-air bag (inflator) module at terminals in “L25” or “L30” connector.<br>3) If OK, then connect special tools (B) and (C) to side-air bag (inflator) module connector disconnected at the Step 1.<br>**Special tool**<br>**(B): 09932–75010**<br>**(C): 09932–78340**<br> 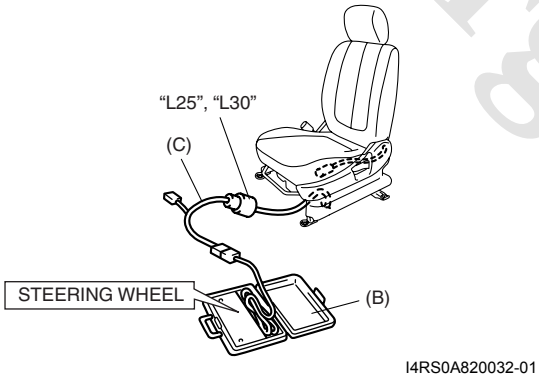 <br><br>4) Check SDM DTC.<br>*With ignition switch ON, is DTC B1323 or B1327 still indicated?* | Go to Step 2. | Go to Step 3. |

www.cargeek.ir

www.CarGeek.ir


| Step | Action | Yes | No |
|---|---|---|---|
| 2 | 1) With ignition switch OFF, disconnect special tools and SDM connector “L33”.<br>2) Release shorting bar in SDM connector inserting release tool (1) included in special tool (A).<br>3) Measure resistance between “L33-1” and body ground, and between “L33-2” and body ground (for DTC B1323) or “L33-3” and body ground, and between “L33-4” and body ground (for DTC B1327) with connected special tools (B) and (C).<br>**Special tool**<br>**(A): 09932–76010**<br>**(B): 09932–75010**<br>**(C): 09932–78340**<br> 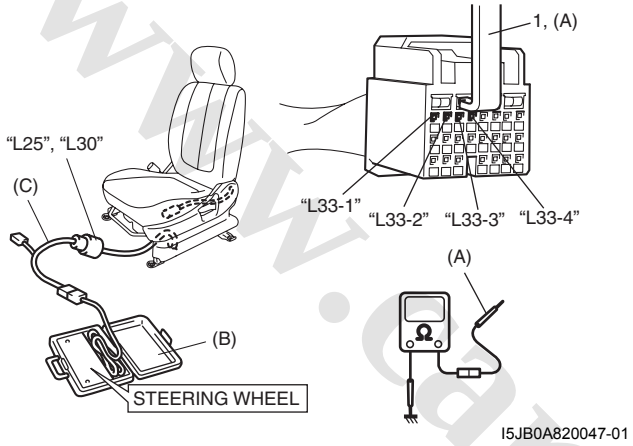 <br><br>*Is resistance infinity?* | Substitute a known-good SDM and recheck. | DTC B1323: Repair short from “GRY/RED” or “GRY” wire circuit to ground in floor harness.<br>DTC B1327: Repair short from “BRN/WHT” or “BRN” wire circuit to ground in floor harness. |

www.cargeek.ir

www.CarGeek.ir

| Step | Action | Yes | No |
|---|---|---|---|
| 3 | 1) With ignition switch OFF, disconnect special tools (B) and (C) then reconnect connector “L25” or “L30”.<br>2) Disconnect side-air bag (inflator) module connector “Q02” or “Q03” from side-air bag (inflator) module.<br>3) Check proper connection to side-air bag (inflator) module at terminal in connector.<br>4) If OK, then connect special tools (A), (B) and (C) to side-air bag (inflator) connector.<br>**Special tool**<br>**(A): 09932–76010**<br>**(B): 09932–75010**<br>**(D): 09932–78310**<br> 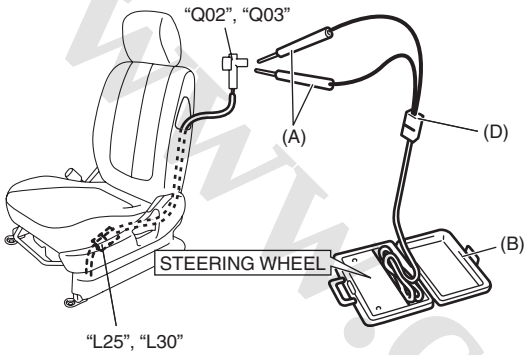 <br><br>I5JB0A820046-02<br>5) Check SDM DTC.<br>*With ignition switch ON, is DTC B1323 or B1327 still indicated?* | DTC B1323: Repair short from “GRY/RED” or “GRY” wire circuit to ground in seat harness.<br>DTC B1327: Repair short from “BRN/WHT” or “BRN” wire circuit to ground in seat harness. | Replace side-air bag (inflator) module referring to “Side-Air Bag (Inflator) Module Removal and Installation: ”. |

**NOTE**

**Upon completion of inspection and repair work, perform the following items.**

- **Reconnect all air bag system components, ensure all components are properly mounted.**
- **Clear DTCs referring to “DTC Clearance: ”, if any.**
- **Repeat “Air Bag Diagnostic System Check: ” to confirm that the trouble has been corrected.**

www.cargeek.ir

www.CarGeek.ir


## DTC B1324 / B1328: Left / Right Side-Air Bag Initiator Circuit Short to Power Circuit

S5JB0A8204033

### Wiring Diagram

Refer to “DTC B1321 / B1325: Left / Right Side-Air Bag Initiator Circuit Resistance High: ”.

**⚠ CAUTION**

**Be sure to observe instructions under CAUTION in “Air Bag Diagnostic System Check Flow”.**

### DTC Will Set when

The voltage measured at side-air bag (left or right) initiator circuit is above a specified value for specified time.

### Flow Test Description

**Step 1:** Check whether malfunction is in side-air bag (inflator) module.
**Step 2:** Check side-air bag initiator circuit in floor harness.
**Step 3:** Check side-air bag initiator circuit in seat harness.

### DTC Troubleshooting

| Step | Action | Yes | No |
|---|---|---|---|
| 1 | 1) With ignition switch OFF, disconnect side-air bag (inflator) module connector under front seat cushion.<br>2) Check proper connection to left or right side-air bag (inflator) module at terminals in “L25” or “L30” connector.<br>3) If OK, then connect special tools (B) and (C) to side-air bag (inflator) module connector disconnected at the Step 1.<br>**Special tool**<br>**(B): 09932–75010**<br>**(C): 09932–78340**<br> 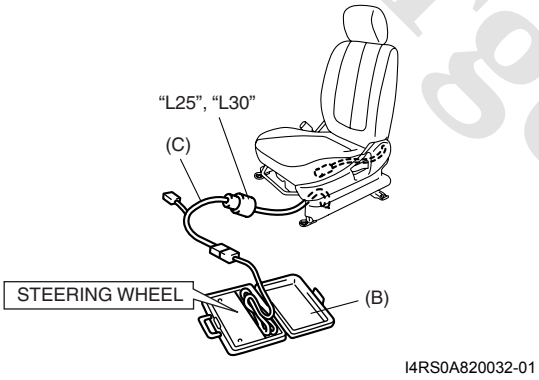 <br><br>I4RS0A820032-01<br>4) Check SDM DTC.<br>*With ignition switch ON, is DTC B1324 or B1328 still indicated?* | Go to Step 2. | Go to Step 3. |

www.cargeek.ir

www.CarGeek.ir

| Step | Action | Yes | No |
|---|---|---|---|
| 2 | 1) With ignition switch OFF, disconnect special tools (B), (C) and SDM connector “L33”.<br>2) Release shorting bar in SDM connector inserting release tool (1) included in special tool (A).<br>3) Measure voltage between “L33-1” and body ground, and between “L33-2” and ground (for DTC B1324) or “L33-3” and body ground, and between “L33-4” and body ground (for DTC B1328) with connected special tools (B) and (C).<br>**Special tool**<br>**(A): 09932–76010**<br>**(B): 09932–75010**<br>**(C): 09932–78340**<br> 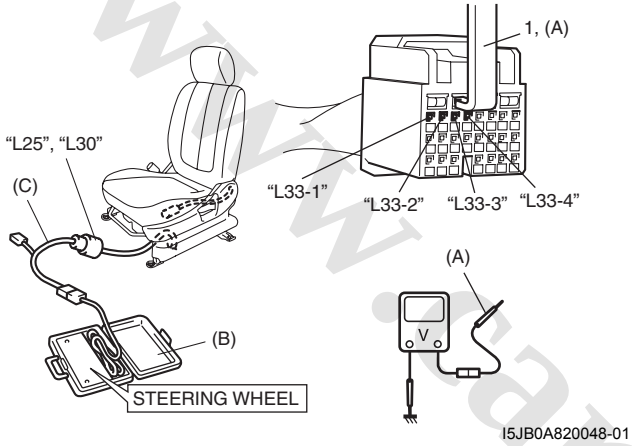 <br><br>*With ignition switch ON, is voltage 1 V or less?* | Substitute a known-good SDM and recheck. | DTC B1324: Repair short from “GRY/RED” or “GRY” wire circuit to power circuit in floor harness.<br>DTC B1328: Repair short from “BRN/WHT” or “BRN” wire circuit to power circuit in floor harness. |

www.cargeek.ir

www.CarGeek.ir


| Step | Action | Yes | No |
|---|---|---|---|
| 3 | 1) With ignition switch OFF, disconnect special tools (B) and (C) then reconnect connector “L25” or “L30”.<br>2) Disconnect side-air bag (inflator) module connector “Q02” or “Q03” from side-air bag (inflator) module.<br>3) Check proper connection to side-air bag (inflator) module at terminal in connector.<br>4) If OK, then connect special tools (A), (B) and (C) to side-air bag (inflator) connector.<br>**Special tool**<br>**(A): 09932–76010**<br>**(B): 09932–75010**<br>**(D): 09932–78310**<br> 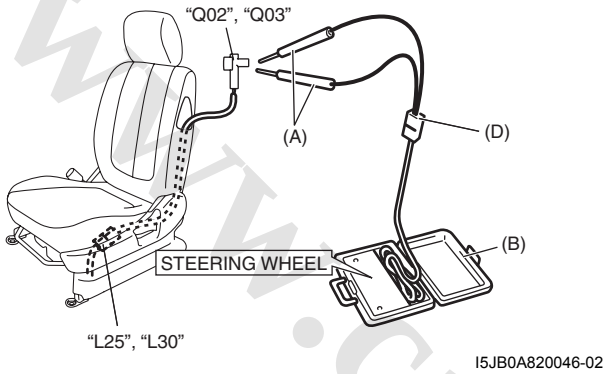 <br><br>5) Check SDM DTC.<br>*With ignition switch ON, is DTC B1064 or B1068 still indicated?* | DTC B1324: Repair short from “GRY/RED” or “GRY” wire circuit to power circuit in seat harness.<br>DTC B1328: Repair short from “BRN/WHT” or “BRN” wire circuit to power circuit in seat harness. | Replace side-air bag (inflator) module referring to“Side-Air Bag (Inflator) Module Removal and Installation: ”. |

**NOTE**

**Upon completion of inspection and repair work, perform the following items.**

- **Reconnect all air bag system components, ensure all components are properly mounted.**
- **Clear DTCs referring to “DTC Clearance: ”, if any.**
- **Repeat “Air Bag Diagnostic System Check: ” to confirm that the trouble has been corrected.**

## DTC B1331 / B1335: Left / Right Side Curtain-Air Bag Initiator Circuit Resistance High

S5JB0A8204043

### Wiring Diagram

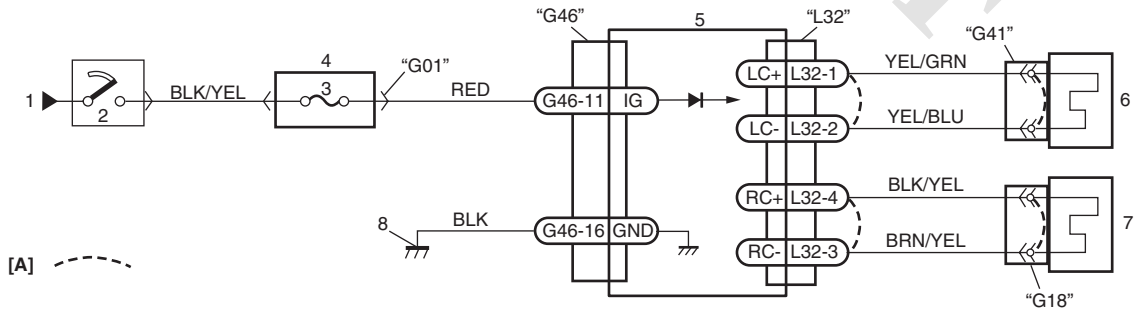


I5JB0A820056-01

| | | |
|---|---|---|
| [A]: Shorting bar | 3. “A/B” fuse | 6. Left side curtain-air bag (inflator) module |
| 1. From main fuse | 4. Junction block assembly | 7. Right side curtain-air bag (inflator) module |
| 2. Ignition switch | 5. SDM | 8. Ground for air bag system |

www.cargeek.ir

www.CarGeek.ir

⚠ **CAUTION**

**Be sure to observe instructions under CAUTION in “Air Bag Diagnostic System Check Flow”.**

**DTC Will Set when**

The combined resistance of the side curtain-air bag (inflator) module (left or right), harness wiring and connector terminal contact is above a specified value for specified time.

**Flow Test Description**

**Step 1:** Check whether malfunction is in side curtain-air bag (inflator) module.
**Step 2:** Check side curtain-air bag initiator circuit.

**DTC Troubleshooting**

| Step | Action | Yes | No |
|---|---|---|---|
| 1 | 1) With ignition switch OFF, remove rear side upper trim of left or right side and disconnect side curtain-air bag (inflator) module connector.<br>2) Check proper connection to side curtain-air bag (inflator) module at terminals in “G18” or “G41” connector.<br>3) If OK, then connect special tools (A), (B) and (C) to side curtain-air bag (inflator) module connector.<br>**Special tool**<br>**(A): 09932–76010**<br>**(B): 09932–75010**<br>**(C): 09932–78310**<br> 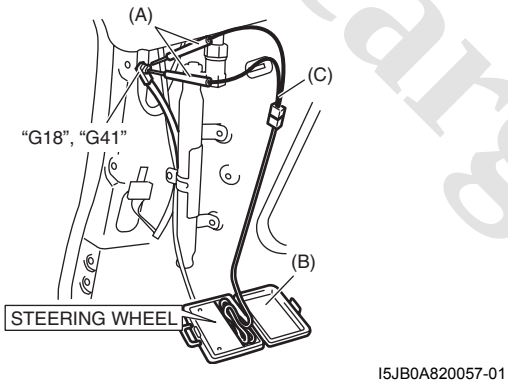 <br><br>4) Check SDM DTC.<br>*With ignition switch ON, is DTC B1331 or B1335 still indicated?* | Go to Step 2. | Replace side curtain-air bag (inflator) module referring to “Side Curtain-Air Bag (Inflator) Module Removal and Installation: ”. |

www.cargeek.ir

www.CarGeek.ir


| Step | Action | Yes | No |
|---|---|---|---|
| 2 | 1) With ignition switch OFF, disconnect SDM connector “L32”.<br>2) Check proper connection to SDM at terminals “L32-1” and “L32-2” or “L32-3” and “L32-4”.<br>3) If OK, release shorting bar in SDM connector inserting release tool (1) included in special tool (A).<br>4) Measure resistance between “L32-1” and “L32-2” terminals (for DTC B1331) or “L32-3” and “L32-4” terminals (for DTC B1335) with connected special tools (A), (B) and (C).<br>**Special tool**<br>**(A): 09932–76010**<br>**(B): 09932–75010**<br>**(C): 09932–78310**<br> 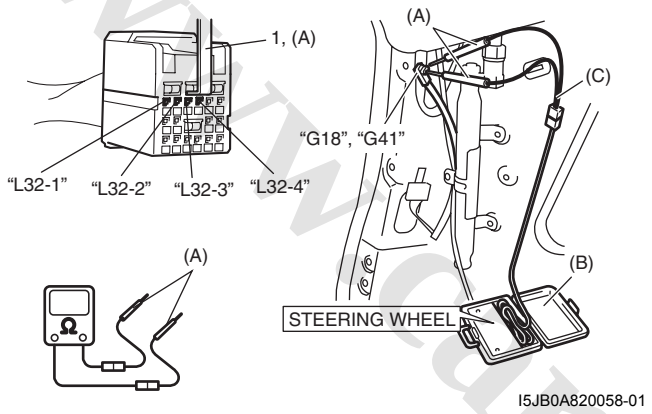 <br><br>*Is resistance 5.5 Ω or less?* | Substitute a known-good SDM and recheck. | DTC B1331: Repair high resistance or open in “YEL/GRN” or “YEL/BLU” wire circuit.<br>DTC B1335: Repair high resistance or open in “BLK/YEL” or “BRN/YEL” wire circuit. |

**NOTE**

**Upon completion of inspection and repair work, perform the following items.**

- **Reconnect all air bag system components, ensure all components are properly mounted.**
- **Clear DTCs referring to “DTC Clearance: ”, if any.**
- **Repeat “Air Bag Diagnostic System Check: ” to confirm that the trouble has been corrected.**

www.cargeek.ir

www.CarGeek.ir

## DTC B1332 / B1336: Left / Right Side Curtain-Air Bag Initiator Circuit Resistance Low

S5JB0A8204044

### Wiring Diagram

Refer to “DTC B1331 / B1335: Left / Right Side Curtain-Air Bag Initiator Circuit Resistance High: ”.

**⚠ CAUTION**

**Be sure to observe instructions under CAUTION in “Air Bag Diagnostic System Check Flow”.**

### DTC Will Set when

The combined resistance of the side curtain-air bag (inflator) module (left or right), harness wiring and connector terminal contact is below a specified value for specified time.

### Flow Test Description

**Step 1:** Check whether malfunction is in side curtain-air bag (inflator) module.
**Step 2:** Check side curtain-air bag initiator circuit.

### DTC Troubleshooting

| Step | Action | Yes | No |
|---|---|---|---|
| 1 | 1) With ignition switch OFF, remove rear side upper trim of left or right side and disconnect side curtain-air bag (inflator) module connector.<br>2) Check proper connection to side curtain-air bag (inflator) module at terminals in “G18” or “G41” connector.<br>3) If OK, then connect special tools (A), (B) and (C) to side curtain-air bag (inflator) module connector.<br>**Special tool**<br>**(A): 09932–76010**<br>**(B): 09932–75010**<br>**(C): 09932–78310**<br> 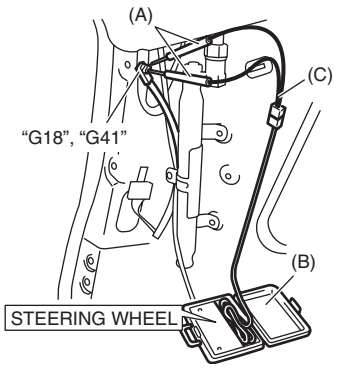 <br><br>I5JB0A820057-01<br>4) Check SDM DTC.<br>*With ignition switch ON, is DTC B1332 or B1336 still indicated?* | Go to Step 2. | Replace side curtain-air bag (inflator) module referring to “Side Curtain-Air Bag (Inflator) Module Removal and Installation: ”. |

www.cargeek.ir

www.CarGeek.ir


| Step | Action | Yes | No |
|---|---|---|---|
| 2 | 1) With ignition switch OFF, disconnect SDM connector “L32”.<br>2) Check proper connection to SDM at terminals “L32-1” and “L32-2” or “L32-3” and “L32-4”.<br>3) If OK, release shorting bar in SDM connector inserting release tool (1) included in special tool (A).<br>4) Measure resistance between “L32-1” and “L32-2” terminals (for DTC B1332) or “L32-3” and “L32-4” terminals (for DTC B1336) with connected special tools (A), (B) and (C).<br>**Special tool**<br>**(A): 09932–76010**<br>**(B): 09932–75010**<br>**(C): 09932–78310**<br> 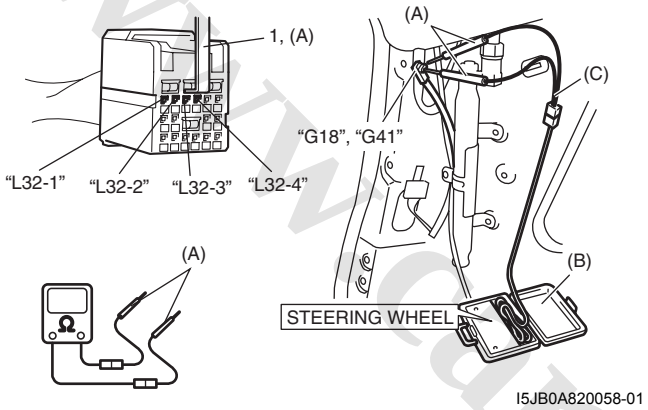 <br><br>*Is resistance 0.65 Ω or more?* | Substitute a known-good SDM and recheck. | DTC B1332: Repair short from “YEL/GRN” wire circuit to “YEL/BLU” wire circuit or from “YEL/GRN” or “YEL/BLU” wire circuit to other wire circuit.<br>DTC B1336: Repair short from “BLK/YEL” wire circuit to “BRN/YEL” wire circuit or from “BLK/YEL” or “BRN/YEL” wire circuit to other wire circuit. |

**NOTE**

**Upon completion of inspection and repair work, perform the following items.**

- **Reconnect all air bag system components, ensure all components are properly mounted.**
- **Clear DTCs referring to “DTC Clearance: ”, if any.**
- **Repeat “Air Bag Diagnostic System Check: ” to confirm that the trouble has been corrected.**

www.cargeek.ir

www.CarGeek.ir

## DTC B1333 / B1337: Left / Right Side Curtain-Air Bag Initiator Circuit Short to Ground

S5JB0A8204045

### Wiring Diagram

Refer to “DTC B1331 / B1335: Left / Right Side Curtain-Air Bag Initiator Circuit Resistance High: ”.

**⚠ CAUTION**

**Be sure to observe instructions under CAUTION in “Air Bag Diagnostic System Check Flow”.**

### DTC Will Set when

The voltage measured at side curtain-air bag (left or right) initiator circuit is below a specified value for specified time.

### Flow Test Description

**Step 1:** Check whether malfunction is in side curtain-air bag (inflator) module.
**Step 2:** Check side curtain-air bag initiator circuit.

### DTC Troubleshooting

| Step | Action | Yes | No |
|---|---|---|---|
| 1 | 1) With ignition switch OFF, remove rear side upper trim of left or right side and disconnect side curtain-air bag (inflator) module connector.<br>2) Check proper connection to side-air bag (inflator) module at terminals in “G18” or “G41” connector.<br>3) If OK, then connect special tools (A), (B) and (C) to side curtain-air bag (inflator) module connector.<br>**Special tool**<br>**(A): 09932–76010**<br>**(B): 09932–75010**<br>**(C): 09932–78310**<br> 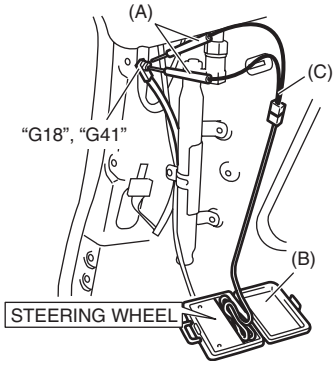 <br><br>I5JB0A820057-01<br>4) Check SDM DTC.<br>*With ignition switch ON, is DTC B1333 or B1337 still indicated?* | Go to Step 2. | Replace side curtain-air bag (inflator) module referring to “Side Curtain-Air Bag (Inflator) Module Removal and Installation: ”. |

www.cargeek.ir

www.CarGeek.ir


| Step | Action | Yes | No |
|---|---|---|---|
| 2 | 1) With ignition switch OFF, disconnect SDM connector “L32”.<br>2) Release shorting bar in SDM connector inserting release tool (1) included in special tool (A).<br>3) Measure resistance between “L32-1” and body ground, and between “L32-2” and body ground (for DTC B1333) or “L32-3” and body ground, and between “L32-4” and body ground (for DTC B1337) with connected special tools (A), (B) and (C).<br>**Special tool**<br>**(A): 09932–76010**<br>**(B): 09932–75010**<br>**(C): 09932–78310**<br> 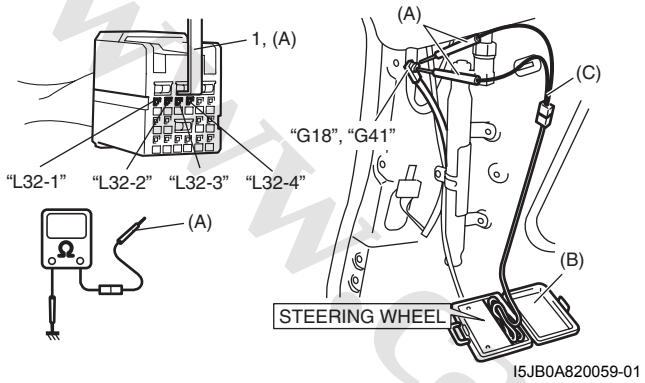 <br><br>*Is resistance infinity?* | Substitute a known-good SDM and recheck. | DTC B1333: Repair short from “YEL/GRN” or “YEL/BLU” wire circuit to ground.<br>DTC B1337: Repair short from “BLK/YEL” or “BRN/YEL” wire circuit to ground. |

**NOTE**

**Upon completion of inspection and repair work, perform the following items.**

- **Reconnect all air bag system components, ensure all components are properly mounted.**
- **Clear DTCs referring to “DTC Clearance: ”, if any.**
- **Repeat “Air Bag Diagnostic System Check: ” to confirm that the trouble has been corrected.**

www.cargeek.ir

www.CarGeek.ir

## DTC B1334 / B1338: Left / Right Side Curtain-Air Bag Initiator Circuit Short to Power Circuit

S5JB0A8204046

### Wiring Diagram

Refer to “DTC B1331 / B1335: Left / Right Side Curtain-Air Bag Initiator Circuit Resistance High: ”.

**⚠ CAUTION**

**Be sure to observe instructions under CAUTION in “Air Bag Diagnostic System Check Flow”.**

### DTC Will Set when

The voltage measured at side curtain-air bag (left or right) initiator circuit is above a specified value for specified time.

### Flow Test Description

**Step 1:** Check whether malfunction is in side curtain-air bag (inflator) module.
**Step 2:** Check side curtain-air bag initiator circuit.

### DTC Troubleshooting

| Step | Action | Yes | No |
|---|---|---|---|
| 1 | 1) With ignition switch OFF, remove rear side upper trim of left or right side and disconnect side curtain-air bag (inflator) module connector.<br>2) Check proper connection to side curtain-air bag (inflator) module at terminals in “G18” or “G41” connector.<br>3) If OK, then connect special tools (A), (B) and (C) to side curtain-air bag (inflator) module connector.<br>**Special tool**<br>**(A): 09932–76010**<br>**(B): 09932–75010**<br>**(C): 09932–78310**<br> 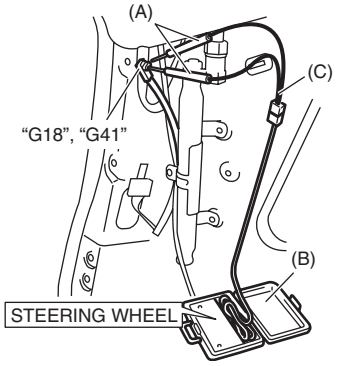 <br><br>I5JB0A820057-01<br>4) Check SDM DTC.<br>*With ignition switch ON, is DTC B1334 or B1338 still indicated?* | Go to Step 2. | Replace side curtain-air bag (inflator) module referring to “Side Curtain-Air Bag (Inflator) Module Removal and Installation: ”. |

www.cargeek.ir

www.CarGeek.ir


| Step | Action | Yes | No |
|---|---|---|---|
| 2 | 1) With ignition switch OFF, disconnect SDM connector “L32”.<br>2) Release shorting bar in SDM connector inserting release tool (1) included in special tool (A).<br>3) Measure voltage between “L32-1” and body ground, and between “L32-2” and ground (for DTC B1334) or “L32-3” and body ground, and between “L32-4” and body ground (for DTC B1338) with connected special tools (A), (B) and (C).<br>**Special tool**<br>**(A): 09932–76010**<br>**(B): 09932–75010**<br>**(C): 09932–78310**<br> 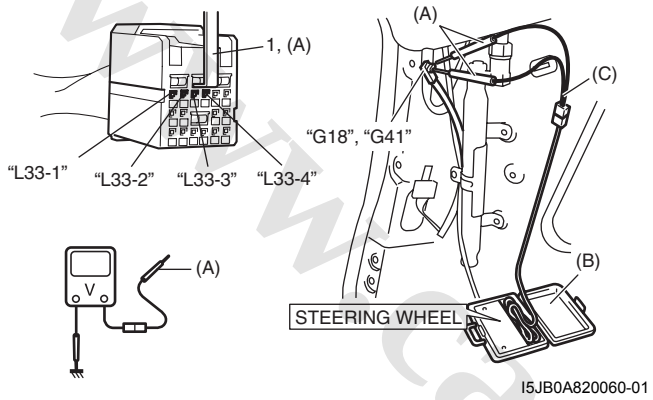 <br><br>*With ignition switch ON, is voltage 4 V or less?* | Substitute a known-good SDM and recheck. | DTC B1034: Repair short from “YEL/GRN” or “YEL/BLU” wire circuit to power circuit.<br>DTC B1038: Repair short from “BLK/YEL” or “BRN/YEL” wire circuit to power circuit. |

**NOTE**

**Upon completion of inspection and repair work, perform the following items.**

- **Reconnect all air bag system components, ensure all components are properly mounted.**
- **Clear DTCs referring to “DTC Clearance: ”, if any.**
- **Repeat “Air Bag Diagnostic System Check: ” to confirm that the trouble has been corrected.**

## Inspection of Intermittent and Poor Connections

S5JB0A8204047

Most intermittents are caused by faulty electrical connections or wiring. When a check for proper connection is requested in a diagnostic flow, perform careful check of suspect circuits.
If any abnormality is found, repair or replace as a wire harness assembly.

- Poor mating of connector halves, or terminals not fully seated in the connector body (backed out).
- Dirt or corrosion on the terminals. The terminals must be clean and free of any foreign material which could impede proper terminal contact.
  However, cleaning the terminal with a sand paper or the like is prohibited.
- Damaged connector body, exposing the terminals to moisture and dirt, as well as not maintaining proper terminal orientation with the component or mating connector.
- Improperly formed or damaged terminals.
  Check each connector terminal in problem circuits carefully to ensure good contact tension by using the corresponding mating terminal included in the connector test adapter kit (special tool).
  If contact tension is not enough, reform the terminal to increase contact tension or replace it.

www.cargeek.ir

www.CarGeek.ir

**Special tool**
**(A): 09932-76010 Connector test adapter kit**

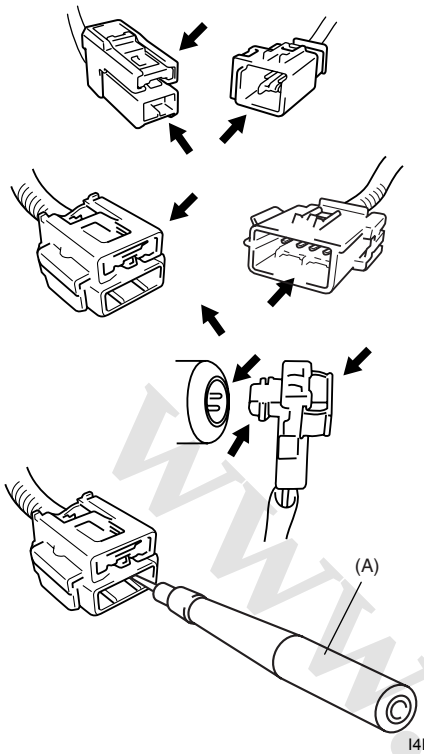


I4RS0A820045-01

- Poor terminal-to-wire connection.
  Check each wire harness in problem circuits for poor connection by shaking it by hand lightly. If any abnormal condition is found, change the wire harness assembly or component parts with new ones.

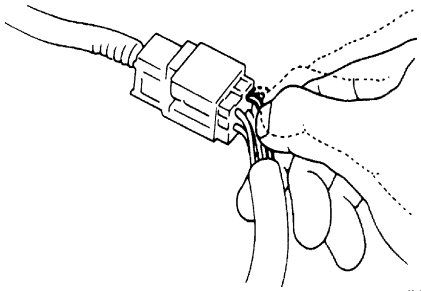

IYSQ01010028-01

- Wire insulation which is rubbed through, causing an intermittent short as the bare area touches other wiring or parts of the vehicle.
- Wire broken inside the insulation. This condition could cause a continuity check to show a good circuit, but if only 1 or 2 strands of a multi-strand-type wire are intact, resistance could be far too high.

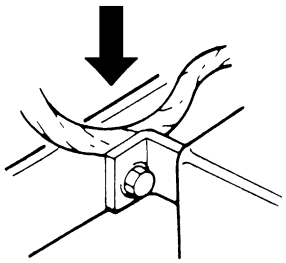

IYSQ01820025-01

## Repair and Inspection Required after Accident

S5JB0A8204048

**⚠ CAUTION**

- **All air bag system components, including the electrical harness (component mounting points), must be inspected after an accident. If any components are damaged or bent, they must be replaced even if air bag system activation did not occur.**
- **Never use air bag system parts from another vehicle.**
- **Do not attempt to service the parts below. Service of these parts is by replacement only.**
  - **Driver / Passenger air bag (inflator) modules**
  - **Driver / Passenger side-air bag (inflator) modules**
  - **Driver / Passenger side curtain-air bag (inflator) modules**
  - **Driver / Passenger seat belt pretensioners**
  - **Driver / Passenger forward-sensors**
  - **Left / Right side-sensors**
  - **SDM**
  - **Contact coil**
  - **Air bag wire harness in main harness, instrument panel harness, floor harness, passenger air bag harness and seat harness.**
- **Proper operation of the sensors and air bag system requires that any repairs to the vehicle structure return it to its original production configuration.**

**⚠ CAUTION**

**After detecting one time of such collision as to meet deployment conditions, the SDM must not be used.**
**Refer to “Air Bag Diagnostic System Check: ” when checking the SDM.**

www.cargeek.ir

www.CarGeek.ir


**Accident with Deployment / Activation – Component Replacement**

When driver and passenger air bags are deployed, the following components must be replaced.

- Driver and passenger air bag (inflator) modules
- Driver and passenger seat belt pretensioners
- SDM
- Driver / Passenger forward-sensors
- Instrument panel

When side-air bag and side curtain-air bag are deployed, the following components must be replaced.

- Deployed side-air bag (inflator) module
- Deployed side curtain-air bag (inflator) module
- Side-sensor
- SDM

**Accident with or without Deployment / Activation – Component Inspections**

Certain air bag and restraint system components must be inspected after any crash, whether the air bag system activated or not. If any faulty condition is found in the following checks, replace faulty part.

Those components are:

- Steering column (1) and shaft joints
  - Check for length, damage and bend according to “Checking Steering Column for Accident Damage: in Section 6B”.
- Steering column bracket (2) and capsules
  - Check for damage and bent.

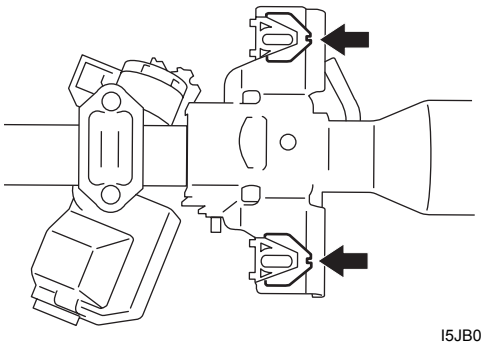

I5JB0A820061-01

- Steering wheel and driver air bag (inflator) module
  - Check for damage or air bag (inflator) module fitness.
  - Check trim cover (pad surface) for cracks.
  - Check wire harness and connector for damage or tightness.

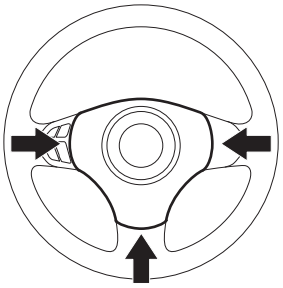

I5JB0A820062-01

- Contact coil
  - Check wire harness and connectors for damage or tightness.
  - Check contact coil case for damage.

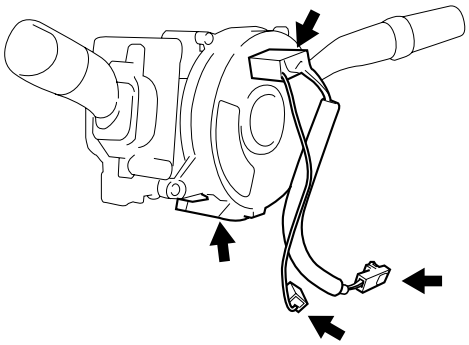

I4RS0A820048-01

- Instrument panel member and reinforcement
  - Check for any distortion, bending, cracking or other damage.
  - Check instrument panel for cracks or deformities.
- Passenger air bag (inflator) module
  - Check for dents, cracks, damage or fitness.
  - Check harness and connector for damage or tightness.

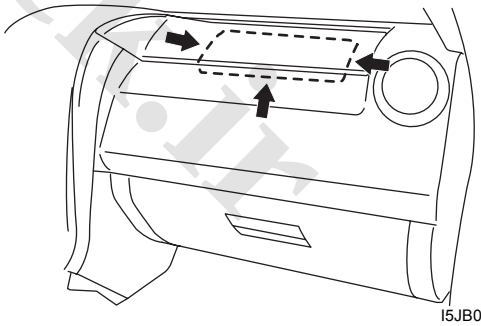

I5JB0A820063-01

- SDM
  - Check for external damage such as deformation, scratch, crack, peeled paint, etc.
  - Check SDM for a cause in itself preventing its proper installation. (There is a gap between SDM and SDM plate, or it cannot be fixed securely.)

www.cargeek.ir

www.CarGeek.ir

– Check connector or lead wire of SDM for scorching, melting or damage.
– Check SDM connector and terminals for tightness.
– Check if SDM sets a DTC and is judged as malfunctioning according to the diagnostic flow.

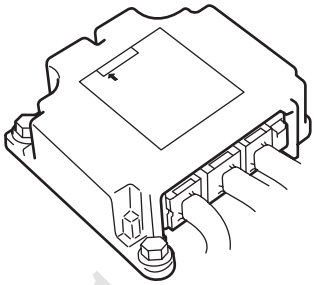

I5JB0A820064-01

- Air bag wire harness and connections
  – Check for damages, deformities or poor connections.
  Refer to “Inspection of Intermittent and Poor Connections: ”.
  – Check wire harness clamps for tightness.

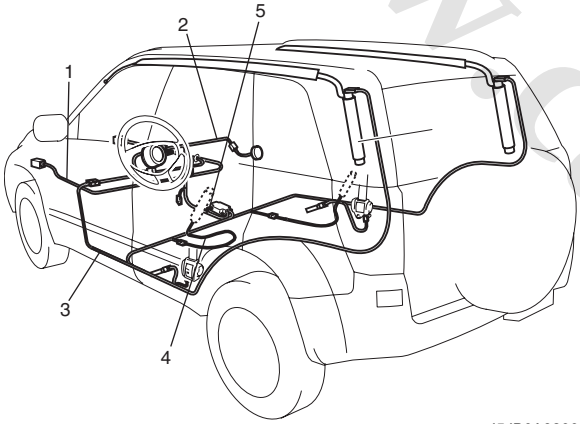


I5JB0A820006-01

| | |
|---|---|
| 1. Main harness | 4. Seat harness |
| 2. Instrument panel harness | 5. Grounding point |
| 3. Floor harness | |

- Forward-sensor
  – Check sensor (1) and bracket (2) for damage, bend or rust.
  – Check connector (3) or lead wire (4) of forward-sensor for scorching, melting or damage.

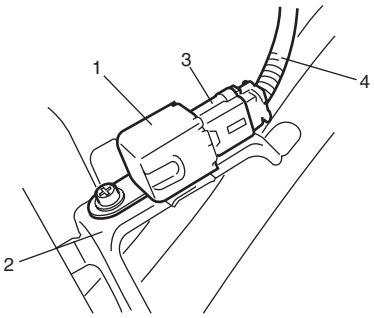


I5JB0A820065-01

- Side-sensor
  – Check sensor (1) and under body (2) for dents, cracks, deformation or rust.
  – Check sensor connector (sensor side and harness side) (3) or sensor lead wire (4) for damage, crack, scorching or melting.

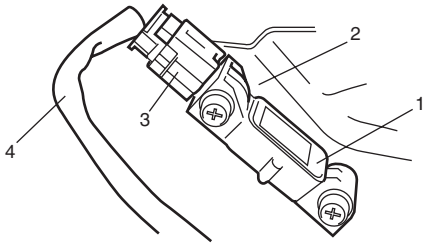


I5JB0A820066-01

- Seat belt pretensioner
  – Check for dents, cracks, damage or fitness
  – Check harness and connector for damage or tightness.

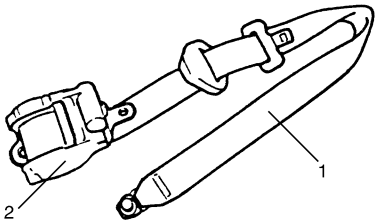


I3JA01820043-01

| | |
|---|---|
| 1. Seat belt | |
| 2. Retractor assembly | |

- Seat belts and mounting points
  – Refer to “Front Seat Belt Components: in Section 8A”.
- “AIR BAG” warning lamp
  – After vehicle is completely repaired, perform “Air Bag Diagnostic System Check: ”.
- Side-air bag (inflator) module
  – Check for dents, cracks, damage or fitness.
  – Check trim cover for cracks or deformities.
  – Check wire harness and connector for damage or tightness.
- Side curtain-air bag (inflator) module
  – Check for dents, cracks, damage or fitness.
  – Check harness wire harness and connector for damage or tightness.
  – Check headlining for cracks or deformation.

www.cargeek.ir

www.CarGeek.ir


# Repair Instructions

## Disabling Air Bag System

S5JB0A8206001

1) Turn steering wheel so that vehicle's wheels (front tires) are pointing straight ahead.
2) Disconnect negative (–) cable at battery.
3) Turn ignition switch to "LOCK" position and remove key.
4) Remove "A/B" fuse from fuse box.
5) Remove steering column cover and disconnect yellow connector (1) of contact coil and combination switch assembly as follows.
   a) Release locking of lock slider (2).
   b) After unlocked, disconnect connector.
6) Remove grove box from instrument panel and disconnect yellow connector (3) for passenger air bag as follows.
   a) Release locking of lock slider (2).
   b) After unlocked, disconnect connector.
7) If equipped with side-air bag (inflator) module, disconnect yellow connector of side-air bag (inflator) module under front seat cushion (4).
   a) Release locking of lock slider (2).
   b) After unlocked, disconnect connector.
8) If equipped with side curtain-air bag (inflator) module, remove quarter inner trim and disconnect black connector (5) of side curtain-air bag (inflator) module.
   a) Unlock button (6).
   b) With lock button unlocked, disconnect connector.

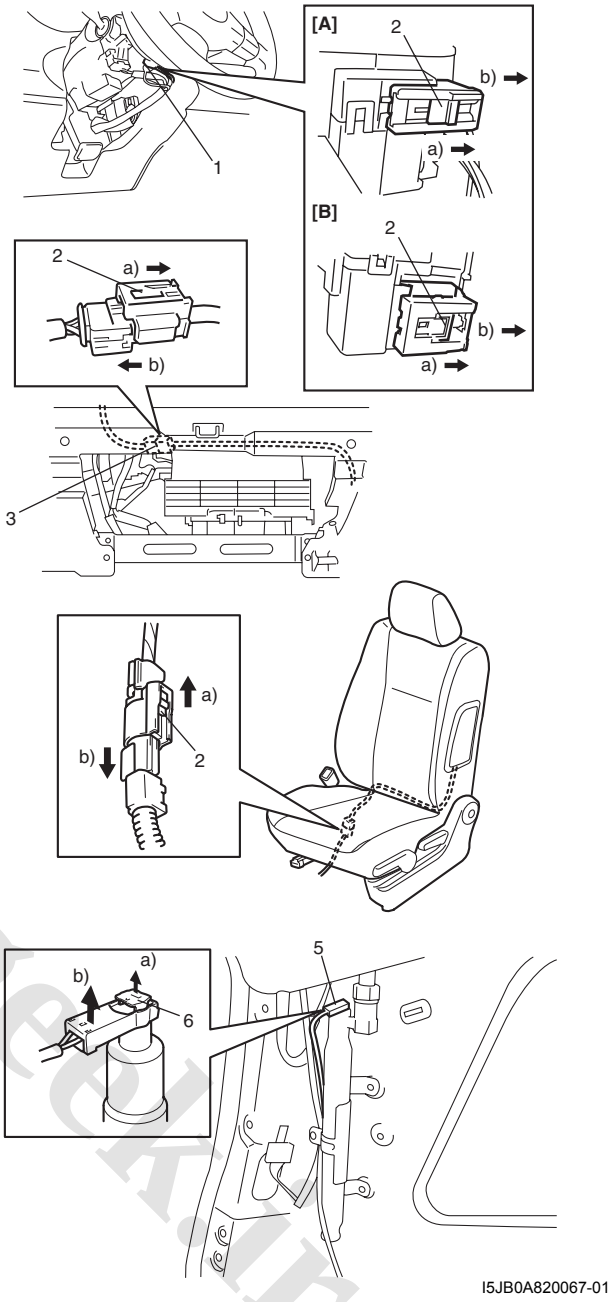


I5JB0A820067-01

| | |
|---|---|
| [A]: | For vehicle without cruise control system |
| [B]: | For vehicle with cruise control system |

**NOTE**

**With "A/B" fuse removed and ignition switch ON, "AIR BAG" warning lamp will be ON. This is normal operation and does not indicate air bag system malfunction.**

www.cargeek.ir

www.CarGeek.ir

## Enabling Air Bag System

S5JB0A8206002

1) Confirm that battery negative (–) cable is disconnected.
2) Turn ignition switch to “LOCK” position and remove key.
3) Connect yellow connector (1) of contact coil and combination switch assembly by pushing connector till click is heard from it.

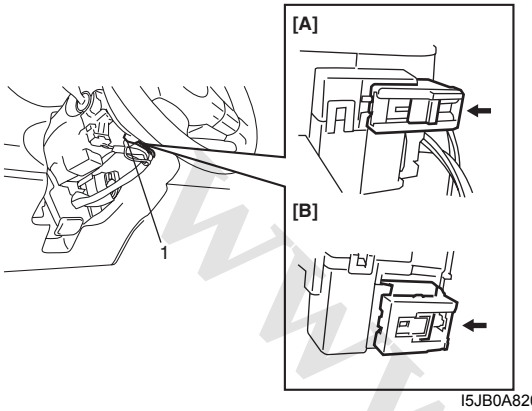


I5JB0A820068-01

| | |
|---|---|
| [A]: | For vehicle without cruise control system |
| [B]: | For vehicle with cruise control system |

4) Connect yellow connector (1) of passenger air bag (inflator) module by pushing connector till click is heard from it.

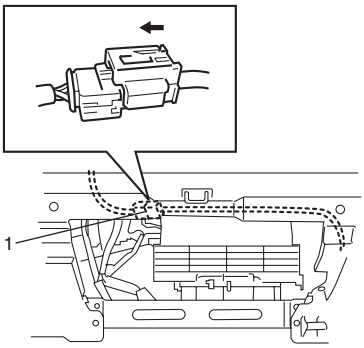


I5JB0A820069-01

5) Install glove box.
6) If equipped with side-air bag (inflator) module, connect yellow connector (1) of side-air bag (inflator) module by pushing connector till click is heard from it.

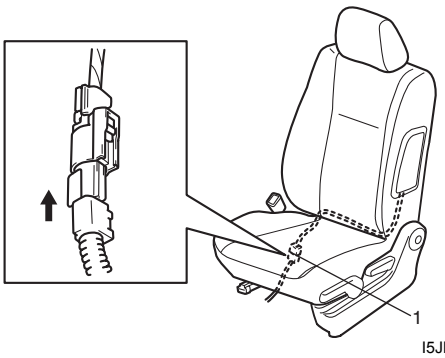


I5JB0A820070-01

7) If equipped with side curtain-air bag (inflator) module, connect black connector (1) securely as shown in figure.
   a) Connect connector.
   b) Lock connector with lock button (2).

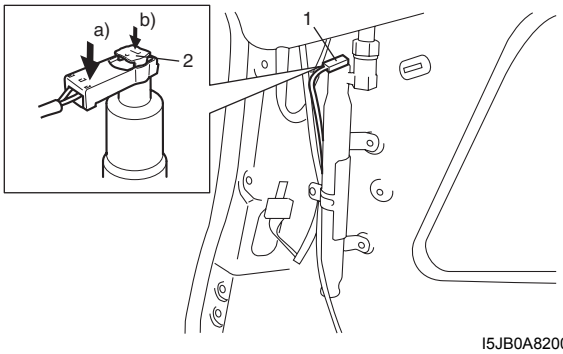


I5JB0A820071-01

8) Install “A/B” fuse to fuse box.
9) Connect negative (–) cable at battery.
10) Turn ignition switch to ON position and verify that “AIR BAG” warning lamp flashes 6 times and then turns OFF. If it does not operate as described, perform “Air Bag Diagnostic System Check: ”.

## SDM Removal and Installation

S5JB0A8206003

**⚠ WARNING**

**During service procedures, be very careful when handling a Sensing and Diagnostic Module (SDM).**
**Be sure to read “Precautions on Service and Diagnosis of Air Bag System: ” before starting to work and observe every precaution during work. Neglecting them may result in personal injury or inactivation of the air bag system when necessary.**

www.cargeek.ir

www.CarGeek.ir


### Removal

1) Disconnect negative cable at battery.
2) Disable air bag system referring to “Disabling Air Bag System: ”.
3) Remove console rear panel referring to “Console Box Components: in Section 9H”.
4) Disconnect SDM connector (1) from SDM (2).

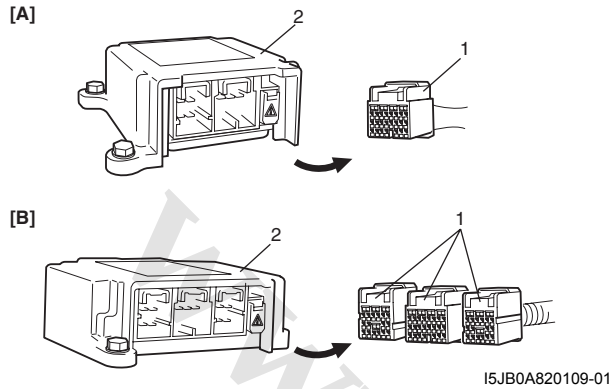


I5JB0A820109-01

| | |
|---|---|
| [A]: | Without side-air bag and curtain-air bag |
| [B]: | With side-air bag and curtain-air bag |

5) Remove SDM (1) from vehicle.

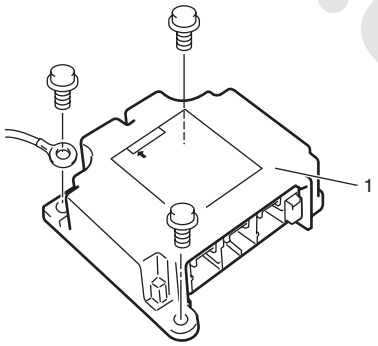


I5JB0A820073-01

### Installation

1) Check that none of the following faulty conditions exists.
   - Bend, scratch, deformity in vehicle body where SDM is mounted.
   - Foreign matter or rust on mating surface of vehicle body where SDM is mounted.
2) Install SDM (2) to vehicle.

**⚠ CAUTION**

**Ensure that arrow on the SDM is pointing toward the front of the vehicle.**

3) Tighten SDM bolts (1) to specified torque.

**Tightening torque**
**SDM bolt (a): 6 N·m (0.6 kgf-m, 4.5 lb-ft)**

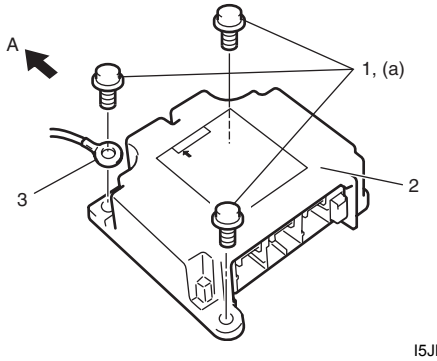


I5JB0A820074-02

| | |
|---|---|
| A: Vehicle forward | 3. Ground for air bag system |

4) Connect SDM connector (1) to SDM (2) securely.

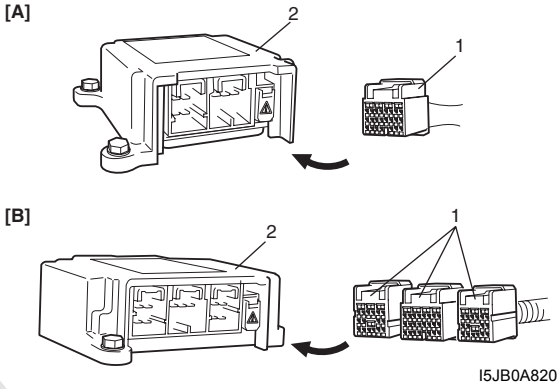


I5JB0A820072-01

| | |
|---|---|
| [A]: | Without side-air bag and curtain-air bag |
| [B]: | With side-air bag and curtain-air bag |

5) Install console rear panel.
6) Enable air bag system referring to “Enabling Air Bag System: ”.
7) Connect negative cable at battery.

## SDM Inspection

S5JB0A8206004

**⚠ WARNING**

**During service procedures, be very careful when handling a Sensing and Diagnostic Module (SDM).**
**Be sure to read “Precautions on Service and Diagnosis of Air Bag System: ” before starting to work and observe every precaution during work. Neglecting them may result in personal injury or inactivation of the air bag system when necessary.**

www.cargeek.ir

www.CarGeek.ir

⚠ **CAUTION**

- **Do not connect a tester whatever type it may be.**
- **Never repair or disassemble SDM.**
- **If SDM has been dropped, it should be replaced.**

If any faulty condition is found in the following checks, replace.

- Check SDM for dents, cracks or deformation.
- Check SDM connector for damage, cracks or lock mechanism.
- Check SDM terminal for bend, corrosion or rust.

## Driver Air Bag (Inflator) Module Removal and Installation

S5JB0A8206005

**⚠ WARNING**

**When handling an air bag (inflator) module, be sure to read "Precautions on Handling and Storage of Air Bag System Components: " and observe each instruction. Failure to follow them could cause a damage to the air bag (inflator) module or result in personal injury.**

### Removal

1) Disconnect negative cable at battery.
2) Disable air bag system. Refer to "Disabling Air Bag System: ".
3) Remove steering wheel side caps (2).
4) Loosen driver air bag (inflator) module mounting bolts (1) till it turns freely, pull them out and fix them to bolt clamps.

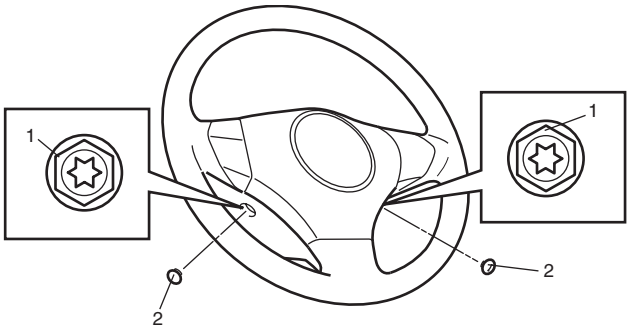


I5JB0A820075-01

5) Remove air bag (inflator) module from steering wheel.
6) Disconnect driver air bag (inflator) module connector (1) of driver air bag (inflator) module as shown in figure.
   a) Unlock lock button (2).
   b) With lock button unlocked, disconnect connector.

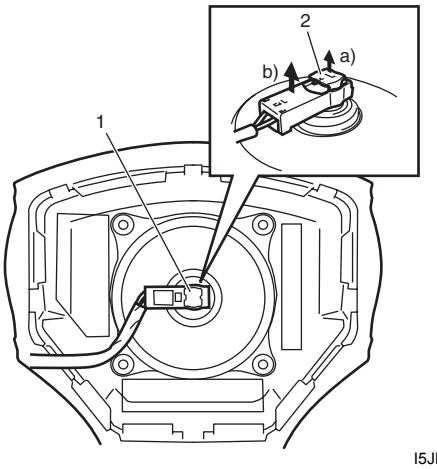


I5JB0A820076-01

### Installation

1) Connect driver air bag (inflator) module connector (1) to driver air bag (inflator) module (2) securely as shown in figure.
   a) Connect connector.
   b) Lock connector with lock button (3).

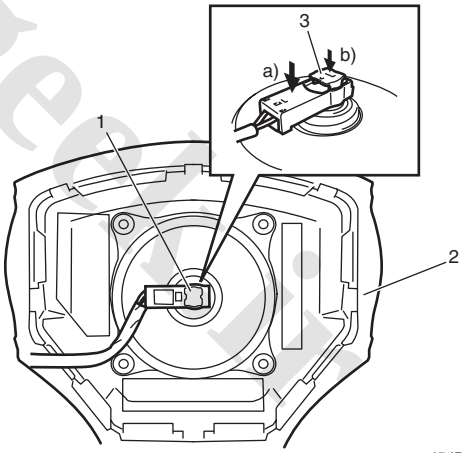


I5JB0A820077-01

www.cargeek.ir

www.CarGeek.ir


2) Install driver air bag (inflator) module (1) to steering wheel (2), taking care so that no part of wire harness is caught between them.
3) Make sure that clearance between module (1) and steering wheel (2) is uniform all the way.
4) Tighten left side bolt (3) of driver air bag (inflator) module first and then right side bolt (4).

**Tightening torque**
**Driver air bag (inflator) module mounting bolt (a): 9 N·m (0.9 kgf-m, 6.5 lb-ft)**

5) Install steering wheel side caps (5).

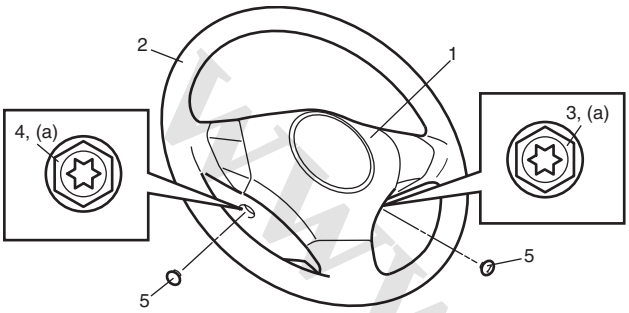

I5JB0A820078-01

6) Enable air bag system. Refer to “Enabling Air Bag System: ”.
7) Connect negative cable at battery.

## Driver Air Bag (Inflator) Module Inspection

S5JB0A8206006

**⚠ WARNING**

**Never disassemble air bag (inflator) module or measure its resistance. Otherwise, personal injury may result.**

**⚠ CAUTION**

**If air bag (inflator) module was dropped from a height of 90 cm (3 ft) or more, it should be replaced.**

Check air bag (inflator) module visually and if any of the following is found, replace it with a new one.

- Air bag being deployed
- Trim cover (pad surface) (1) being cracked
- Inflator case (2) being damaged or having been exposed to strong impact (dropped)
- Bend or deformity of air bag (inflator) module bracket.

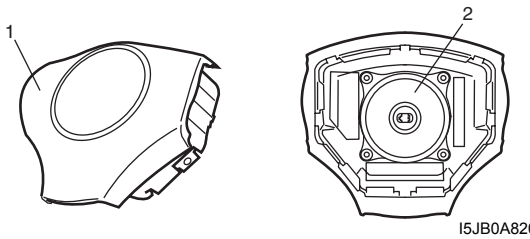

I5JB0A820079-01

## Passenger Air Bag (Inflator) Module Removal and Installation

S5JB0A8206007

**⚠ WARNING**

- **Never attempt to disassemble or repair the passenger air bag (inflator) module. If any abnormality is found, be sure to replace it with new one as an assembly.**
- **Be sure to read “Precautions on Service and Diagnosis of Air Bag System: ”, “Precautions on Handling and Storage of Air Bag System Components: ” and “Precautions on Disposal of Air Bag and Seat Belt Pretensioner: ” before starting to work and observe every precaution during work. Neglecting them may result in personal injury or undeployment of the air bag when necessary.**

### Removal

1) Disable air bag system. Refer to “Disabling Air Bag System: ”.
2) Disconnect passenger air bag (inflator) module connector (1) as shown in figure.
   a) Unlock lock button (2).
   b) With lock button unlocked, disconnect connector.

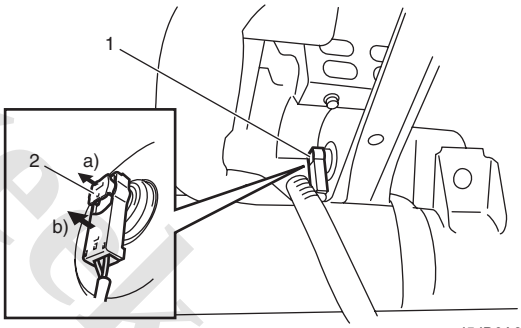

I5JB0A820080-01

www.cargeek.ir

www.CarGeek.ir

3) Remove passenger air bag (inflator) module (1) from instrument panel as shown.

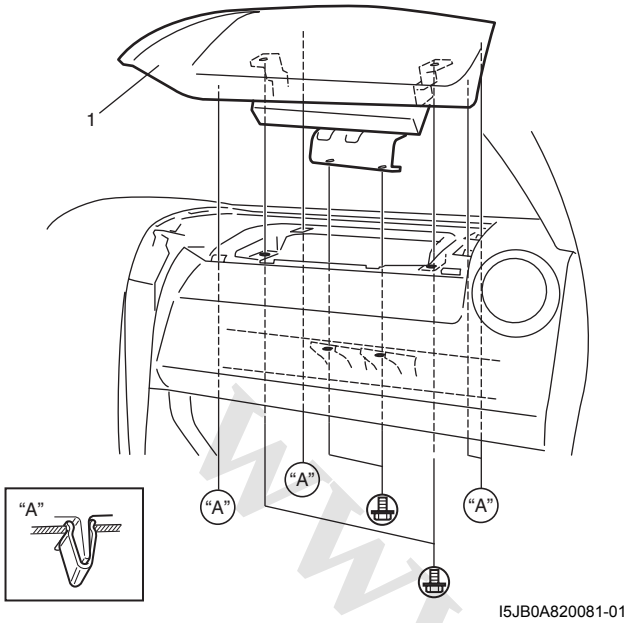

I5JB0A820081-01

**⚠ WARNING**

- **When carrying a live air bag (inflator) module, make sure the bag opening is pointed away from you.**
  **Never carry air bag (inflator) module by wires or connector on the side of the module. In case of an accidental deployment, the bag will then deploy with minimal chance of injury.**
- **As the live passenger air bag (inflator) module must be kept with its bag (trim cover) facing up while being stored or left standing. This is necessary so that a free space is provided to allow the air bag to expand in the unlikely event of accidental deployment.**
- **Observe "Precautions on Handling and Storage of Air Bag System Components: " for handling and storing it.**

**Otherwise, personal injury may result.**

**Installation**

1) Install passenger air bag (inflator) module (1) to instrument panel as shown.
2) Tighten passenger air bag (inflator) module attaching bolts (2) to specified torque.

   **Tightening torque**
   **Passenger air bag (inflator) module attaching bolt (a): 23 N·m (2.3 kgf-m, 16.5 lb-ft)**

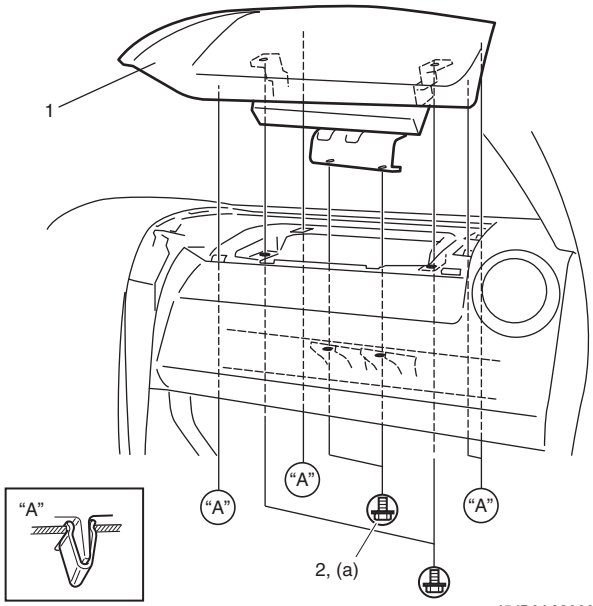

I5JB0A820082-01

3) Connect passenger air bag (inflator) module connector (1) securely as shown in figure.
   a) Connect connector.
   b) Lock connector with lock button (2).

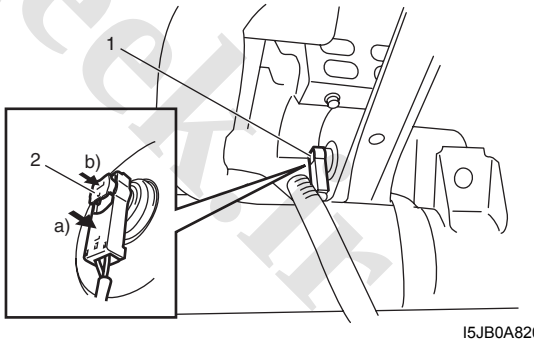

I5JB0A820083-01

4) Enable air bag system. Refer to "Enabling Air Bag System: ".

www.cargeek.ir

www.CarGeek.ir


## Passenger Air Bag (Inflator) Module Inspection

S5JB0A8206008

**⚠ WARNING**

- **Never measure resistance of passenger air bag (inflator) module or disassemble it. Otherwise personal injury may result.**
- **Never attempt to disassemble or repair the passenger air bag (inflator) module. If any abnormality is found, be sure to replace it with new one as an assembly.**
- **Be sure to read "Precautions on Service and Diagnosis of Air Bag System: ", "Precautions on Handling and Storage of Air Bag System Components: " and "Precautions on Disposal of Air Bag and Seat Belt Pretensioner: " before starting to work and observe every precaution during work. Neglecting them may result in personal injury or undeployment of the air bag when necessary.**

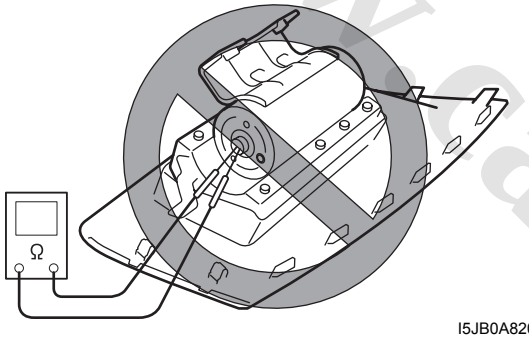


I5JB0A820084-01

**⚠ CAUTION**

**If air bag (Inflator) module was dropped from a height of 90 cm (3 ft) or more, it should be replaced.**

Check air bag (inflator) module appearance visually for the following symptoms and if any one of them is found, replace with a new one.

- Air bag has deployed.
- Wire harness or connector is damaged.
- Air bag (inflator) module is damaged or a strong impact was applied to it.
- Bend or deformity of air bag (inflator) module bracket.

## Side-Air Bag (Inflator) Module Removal and Installation

S5JB0A8206009

**⚠ WARNING**

- **Never attempt to disassemble or repair the side-air bag (inflator) module. If any abnormality is found, be sure to replace it with new one as an assembly.**
- **Be sure to read "Precautions on Service and Diagnosis of Air Bag System: ", "Precautions on Handling and Storage of Air Bag System Components: " and "Precautions on Disposal of Air Bag and Seat Belt Pretensioner: " before starting to work and observe every precaution during work. Neglecting them may result in personal injury or undeployment of the air bag when necessary.**

### Removal

1) Disable air bag system. Refer to "Disabling Air Bag System: ".
2) Roll up the seat surface of the seat back.
3) Remove sleeve lock nut (1) from seat back (2).

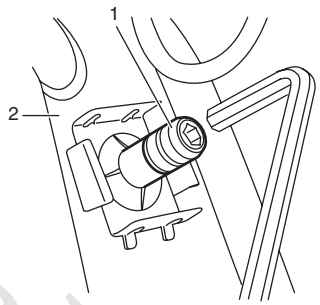


I4RS0A820067-01

4) Remove side-air bag (inflator) module from seat back.
5) Disconnect side-air bag (inflator) module connector (1) as shown in figure.
   a) Unlock lock button (2).
   b) With lock button unlocked, disconnect connector.

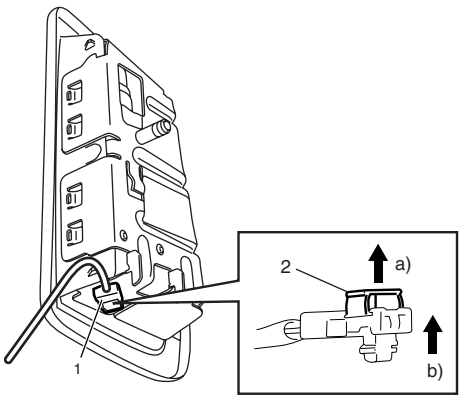


I4RS0A820068-01

www.cargeek.ir

www.CarGeek.ir

**⚠ WARNING**

- **When carrying a live air bag (inflator) module, make sure the bag opening is pointed away from you.**
  **Never carry air bag (inflator) module by wires or connector on the side of the module. In case of an accidental deployment, the bag will then deploy with minimal chance of injury.**
- **As the live side-air bag (inflator) module must be kept with its bag (trim cover) facing up while being stored or left standing. This is necessary so that a free space is provided to allow the air bag to expand in the unlikely event of accidental deployment.**
- **Observe "Precautions on Handling and Storage of Air Bag System Components: " for handling and storing it.**

**Otherwise, personal injury may result.**

**⚠ CAUTION**

**Do not damage the sleeve. Otherwise, the side-air bag cannot be correctly installed to seat back.**

**Installation**

1) Confirm sleeve (1) is surely installed in side-air bag (inflator) module.
2) Tighten sleeve lock nut (2) to specified torque.

   **Tightening torque**
   **Sleeve lock nut (a): 2.5 N·m (0.25 kgf-m, 2.0 lb-ft)**

3) Install new clip to seat back.

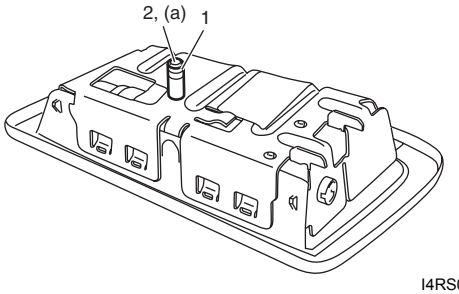


I4RS0A820073-02

4) Connect side-air bag (inflator) module connector (1) securely as shown in figure.
   a) Connect connector.
   b) Lock connector with lock button (2).

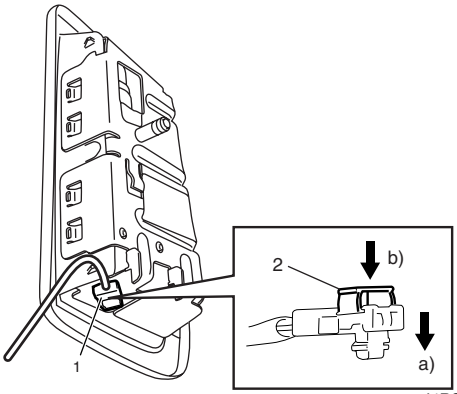


I4RS0A820070-01

5) Insert claw (1) of side-air bag (inflator) module on installation hole (2).
6) Push side-air bag (inflator) module into clip (3) with specified force.

   **Side-air bag (inflator) module installation force**
   **Pushing force: 180 N**

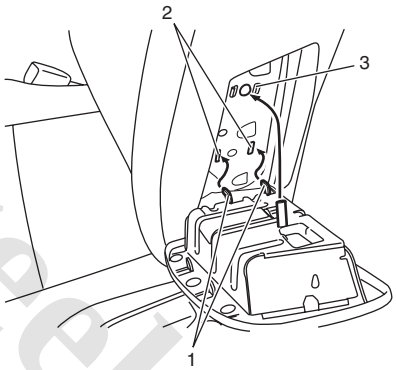


I4RS0A820074-02

www.cargeek.ir

www.CarGeek.ir


## Side-Air Bag (Inflator) Inspection

S5JB0A8206010

**⚠ WARNING**

- **Never attempt to disassemble or repair the side-air bag (inflator) module. If any abnormality is found, be sure to replace it with new one as an assembly.**
- **Be sure to read "Precautions on Service and Diagnosis of Air Bag System: " before starting to work and observe every precaution during work. Neglecting them may result in personal injury or undeployment of the air bag when necessary.**

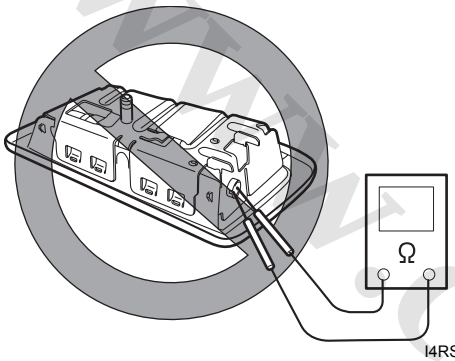


I4RS0A820075-01

**⚠ CAUTION**

**If air bag (inflator) module was dropped from a height of 90 cm (3 ft) or more, it should be replaced.**

Check air bag (inflator) module appearance visually for the following symptoms and if any one of them is found, replace with a new one.

- Air bag has deployed.
- There is a crack in trim cover (pad surface).
- Wire harness or connector is damaged.
- Air bag (inflator) module is damaged or a strong impact was applied to it.
- Bend or deformity of air bag (inflator) module bracket.

## Side Curtain-Air Bag (Inflator) Module Removal and Installation

S5JB0A8206011

**⚠ WARNING**

- **Never attempt to disassemble or repair the side curtain-air bag (inflator) module. If any abnormality is found, be sure to replace it with new one as an assembly.**
- **Be sure to read "Precautions on Service and Diagnosis of Air Bag System: ", "Precautions on Handling and Storage of Air Bag System Components: " and "Precautions on Disposal of Air Bag and Seat Belt Pretensioner: " before starting to work and observe every precaution during work. Neglecting them may result in personal injury or undeployment of the air bag when necessary.**

### Removal

1) Disable air bag system. Refer to "Disabling Air Bag System: ".
2) Remove head lining referring to "Head Lining Removal and Installation: in Section 9H".
3) Disconnect side curtain-air bag (inflator) module connector (1) as shown in figure.
   a) Unlock lock button (2).
   b) With lock button unlocked, disconnect connector.

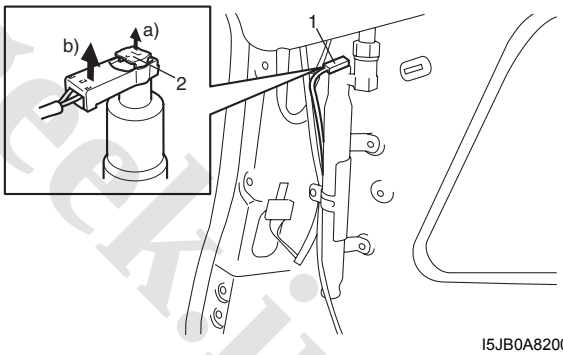


I5JB0A820085-01

www.cargeek.ir

www.CarGeek.ir

4) Remove side curtain-air bag (inflator) module bolts (1) and clip (2).

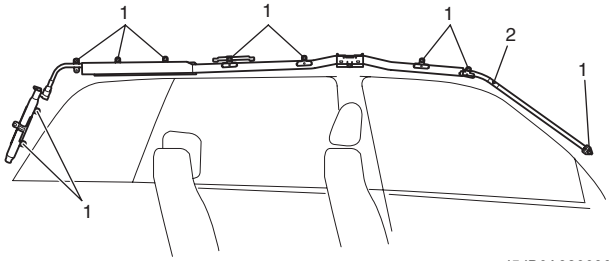

I5JB0A820086-01

5) Remove side curtain-air bag (inflator) module.

**⚠ WARNING**

- **When carrying a live air bag (inflator) module, make sure the bag opening is pointed away from you.**
  **Never carry air bag (inflator) module by wires or connector on the side of the module. In case of an accidental deployment, the bag will then deploy with minimal chance of injury.**
- **As the live curtain air bag (inflator) module must be kept with its bag facing up while being stored or left standing. This is necessary so that a free space is provided to allow the air bag to expand in the unlikely event of accidental deployment.**
- **Observe "Precautions on Handling and Storage of Air Bag System Components: " for handling and storing it.**

**Otherwise, personal injury may result.**

**Installation**

**⚠ WARNING**

**Do not install side curtain-air bag (inflator) module while twisted or bent. Otherwise, side curtain-air bag (inflator) module may not deploy and injury may result.**

1) Install side curtain-air bag (inflator) module (1) with clip (2) and bolts.
2) Tighten side curtain-air bag (inflator) module bolts (3) to specified torque.

**Tightening torque**
**Side curtain-air bag (inflator) module bolts (a): 10 N·m (1.0 kgf-m, 7.5 lb-ft)**

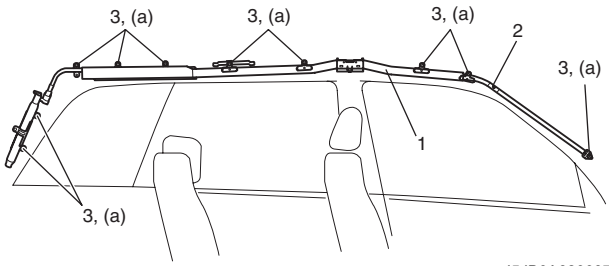

I5JB0A820087-01

3) Connect side curtain-air bag (inflator) module connector (1) securely as shown in figure.
   a) Connect connector.
   b) Lock connector with lock button (2).

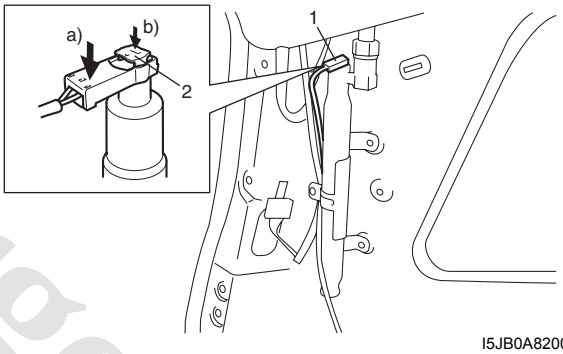

I5JB0A820088-01

4) Install head lining referring to "Head Lining Removal and Installation: in Section 9H".
5) Enable air bag system. Refer to "Enabling Air Bag System: ".

www.cargeek.ir

www.CarGeek.ir


## Side Curtain-Air Bag (Inflator) Module Inspection

S5JB0A8206012

**⚠ WARNING**

- **Never measure resistance of side curtain-air bag (inflator) module or disassemble it. Otherwise personal injury may result.**
- **Never attempt to disassemble or repair the side curtain-air bag (inflator) module. If any abnormality is found, be sure to replace it with new one as an assembly.**
- **Be sure to read "Precautions on Service and Diagnosis of Air Bag System: ", "Precautions on Handling and Storage of Air Bag System Components: " and "Precautions on Disposal of Air Bag and Seat Belt Pretensioner: " before starting to work and observe every precaution during work. Neglecting them may result in personal injury or undeployment of the air bag when necessary.**

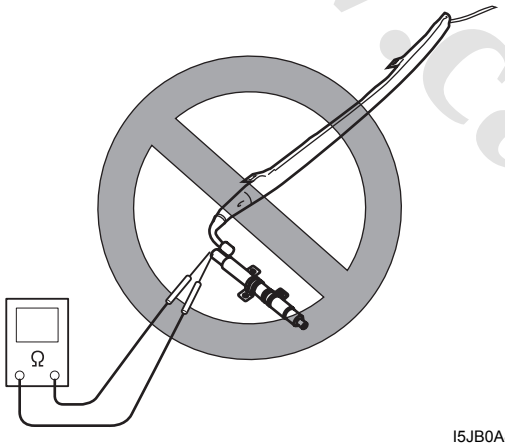


I5JB0A820089-01

**⚠ CAUTION**

**If air bag (inflator) module was dropped from a height of 90 cm (3 ft) or more, it should be replaced.**

Check air bag (inflator) module appearance visually for the following symptoms and if any one of them is found, replace with a new one.

- Air bag has deployed.
- Inflator case being damaged or having been exposed to strong impact (dropped).

## Forward-Sensor Removal and Installation

S5JB0A8206013

**⚠ WARNING**

**During service procedures, be very careful when handling a sensor.**

- **Never strike or jar a sensor.**
- **A sensor and mounting bracket bolts must be carefully torqued to assure proper operation. Under loose connection, it could cause improper operation of the air bag system.**

### Removal

1) Disconnect negative cable at battery.
2) Disable air bag system referring to "Disabling Air Bag System: ".
3) Disconnect forward-sensor connector sliding connector outer (2) as shown.

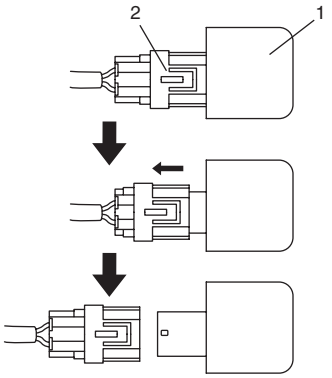


I5JB0A820090-01

1. Forward sensor

4) Remove forward-sensor bolts (1) and forward-sensor (2).

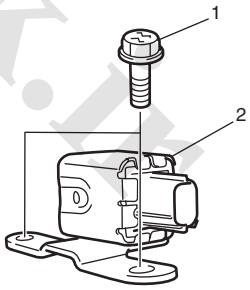


I5JB0A820091-03

www.cargeek.ir

www.CarGeek.ir

### Installation

**⚠ CAUTION**

**Proper operation of forward-sensor requires sensor be rigidly attached to vehicle structure and that the arrow on sensor be pointing toward the front of the vehicle.**

1) Check that none of the following faulty conditions exists.
   - Bend, deformity or rust of front panel.
   - Foreign matter on mating surface of sensor.
2) Apply thread lock cement to mounting bolts thread. Install forward-sensor (1) on bracket and tighten mounting bolt (2) to specified torque.

   **"A": Thread lock cement 99000–32100 (Thread Lock Cement 1305)**

   **Tightening torque**
   **Forward-sensor mounting bolt (a): 11 N·m (1.1 kgf-m, 8.0 lb-ft)**
3) Connect forward-sensor connector (3) by pushing connector till click is heard from it.

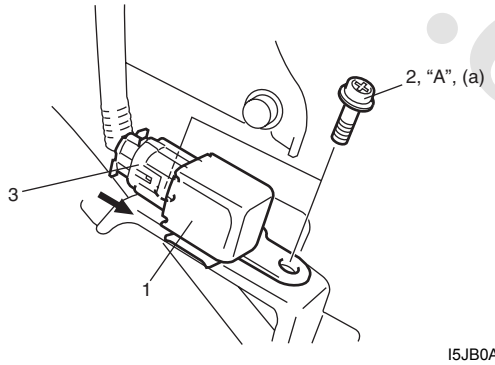

I5JB0A820092-01

4) Connect negative cable at battery.
5) Enable air bag system referring to "Enabling Air Bag System: ".

## Forward-Sensor Inspection

S5JB0A8206014

**⚠ WARNING**

**During service procedures, be very careful when handling a sensor.**
- **Never strike or jar a sensor.**
- **A sensor and mounting bracket bolts must be carefully torqued to assure proper operation. Under loose connection, it could cause improper operation of the air bag system.**

**⚠ CAUTION**

- **Never disassemble forward-sensor.**
- **Sensor should be replaced when it was dropped from a height of 90 cm (3 ft) or more.**

- Check sensor for dents, cracks or deformation.
- Check sensor connector (sensor side and harness side) and sensor connector lock mechanism for damage or crack.
- Check connector terminals for bend, corrosion or rust.

## Side-Sensor Removal and Installation

S5JB0A8206015

**⚠ WARNING**

**During service procedures, be very careful when handling a sensor.**
- **Never strike or jar a sensor.**
- **A sensor bolt must be carefully torqued to assure proper operation. Under loose connection, it could cause improper operation of the air bag system.**

www.cargeek.ir

www.CarGeek.ir


### Removal

1) Disconnect negative (–) cable at battery.
2) Disable air bag system. Refer to “Disabling Air Bag System: ”.
3) Remove center pillar lower trim and side sill scuff.
4) Disconnect side-sensor connector sliding connector outer (1) as shown.

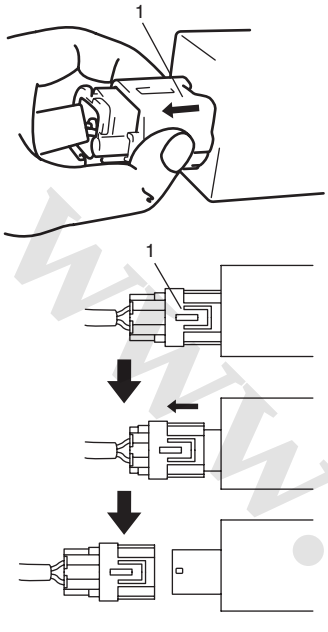

I5JB0A820094-01

5) Remove side-sensor bolts (1), and side-sensor (2) from under body (3).

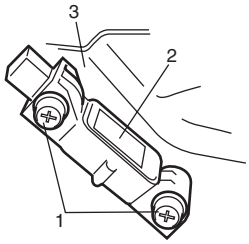

I5JB0A820093-02

### Installation

**⚠ CAUTION**

**Proper operation of side-sensor requires that sensor is rigidly attached to specified position.**

1) Check that none of following faulty conditions exists.
   - Bend, deformity or rust of under body.
   - Foreign matter on mating surface of sensor.
2) Install side-sensor (1) on under body (2) and tighten side-sensor bolt (3) to specified torque.

   **Tightening torque**
   **Side-sensor bolt (a): 11 N·m (1.1 kgf-m, 8.0 lb-ft)**

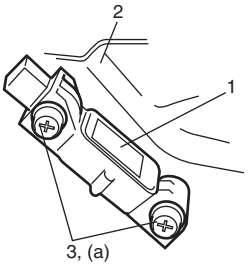

I5JB0A820095-02

3) Connect side-sensor connector pushing connector inner (1) as shown.

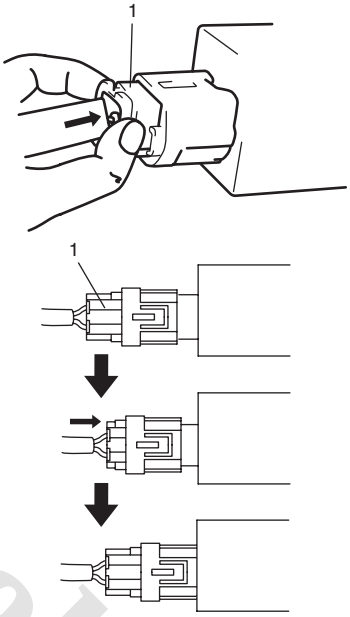

I5JB0A820096-01

4) Connect negative cable at battery.
5) Enable air bag system. Refer to “Enabling Air Bag System: ”.

## Side-Sensor Inspection

S5JB0A8206016

**⚠ WARNING**

**During service procedures, be very careful when handling a sensor.**

- **Never strike or jar a sensor.**
- **A sensor and mounting bracket bolts must be carefully torqued to assure proper operation. Under loose connection, it could cause improper operation of the air bag system.**

www.cargeek.ir

www.CarGeek.ir

⚠ **CAUTION**

- **Never disassemble side-sensor.**
- **Sensor should be replaced when it was dropped from a height of 90 cm (3 ft) or more.**

- Check sensor (1) for dents, crack, deformation.
- Check sensor connector (sensor side and harness side), lock mechanism or sensor lead wire for damage, crack, scorching or melting.
- Check connector terminals for bent, corrosion or rust. If any faulty condition is found in above checks, replace.

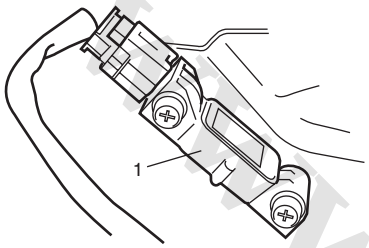


I5JB0A820097-01

## Air Bag (Inflator) Module and Seat Belt Pretensioner Disposal

S5JB0A8206018

**⚠ WARNING**

**Failure to follow proper air bag (inflator) module and seat belt pretensioner disposal procedures can result in air bag deployment and pretensioner activation which may cause personal injury. Do not dispose of live (undeployed) air bag (inflator) modules and seat belt pretensioners. Because undeployed air bag (inflator) module / inactivated seat belt pretensioner must not be disposed of through normal refuse channels. Undeployed air bag (inflator) module and inactivated seat belt pretensioner contain substances that can cause severe illness or personal injury if sealed container is damaged during disposal.**

Air bag (inflator) module / seat belt pretensioner can be deployed / activated inside or outside of vehicle. Deployment / Activation method used depends upon final disposition of vehicle. Review the following instructions in order to determine which will work best in a given situation.
Deployment / Activation Outside of Vehicle: When you intend to return the vehicle to service, deploy the air bag (inflator) module(s) and/or activate seat belt pretensioner(s) outside of the vehicle.
Deployment / Activation Inside of Vehicle: When the vehicle will be destroyed, or salvaged for component parts, deploy the air bag module(s) and/or activate seat belt pretensioner(s) installed on vehicle.

**⚠ WARNING**

**The following precautions must be observed for this work. Failure to observe any of them may result in personal injury.**

- **Procedure should be followed strictly as described here.**
- **Be sure to read “Precautions on Service and Diagnosis of Air Bag System: ” beforehand.**
- **To avoid accidental deployment / activation, this work should be performed by no more than one person.**
- **Since smoke is produced when air bag (inflator) module is deployed and pretensioner is activated, select well-ventilated area.**
- **Air bag (inflator) module and seat belt pretensioner will immediately deploy / activate when 12 volts vehicle battery is connected to it. Wear safety glasses throughout this entire deployment / activation and disposal procedure.**
- **Wear suitable ear protection when deploying air bag (inflator) module / activating seat belt pretensioner. Also, advise those who are in area close to deployment / activation site to wear suitable ear protection.**
- **Do not deploy / activate two or more air bag system components (air bag (inflator) modules and seat belt pretensioners) at the same time.**
- **Never connect deployment harness to any 12 volts vehicle battery before connecting deployment harness to air bag (inflator) module and seat belt pretensioner. Deployment harness shall remain shorted and not be connected to 12 volts vehicle battery till you are ready to deploy air bag (inflator) module or activate seat belt pretensioner.**

www.cargeek.ir

www.CarGeek.ir


**Deployment / Activation Outside of Vehicle**

When you intend to return the vehicle to service, deploy the air bag (inflator) module(s) or activate seat belt pretensioner(s) outside of the vehicle.

1) Turn ignition switch to LOCK position and remove key.
2) Wear safety glasses during this deployment / activation procedure.
3) Check that there is no open, short or damage in special tools (deployment harness (A) and adapter cable (B)). If any faulty is found, do not use it and be sure to use new special tool.

   **Special tool**
   **(A): 09932–75031**
   **(B): 09932–76510**

4) Short two deployment harness leads (1) together by fully seating one banana plug into the other.

**⚠ WARNING**

**Deployment harness (A) shall remain shorted and not be connected to 12 volts vehicle battery till you are ready to deploy air bag module or activate seat belt pretensioner.**

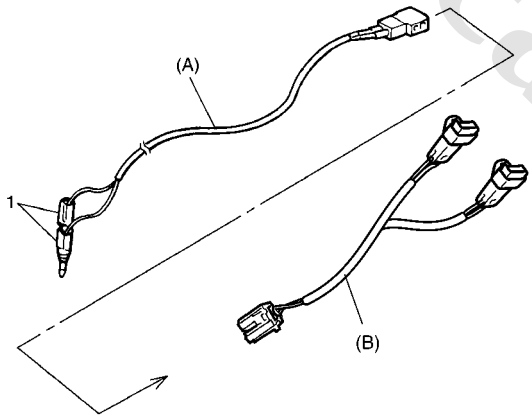


I4RS0A820084-01

5) Remove air bag (inflator) module(s) or seat belt pretensioner(s) from vehicle referring to “Driver Air Bag (Inflator) Module Removal and Installation: ”, “Passenger Air Bag (Inflator) Module Removal and Installation: ”, “Side-Air Bag (Inflator) Module Removal and Installation: ”, “Side Curtain-Air Bag (Inflator) Module Removal and Installation: ” or “Front Seat Belt Removal and Installation: in Section 8A”.

**⚠ WARNING**

- **For handing and storage of live air bag (inflator) module, select place where ambient temperature below 65 °C (150 °F), without high humidity and away from electric noise.**
- **Always carry live air bag (inflator) module with trim cover away from you.**
- **When storing live air bag (inflator) module or when leaving live air bag (inflator) module unattended on bench or other surface, always face trim cover up and away from surface. It is also prohibited to place anything on top of the trim cover and stack air bag (inflator) modules. This is necessary so that free space is provided to allow air bag (inflator) module to expand in the unlikely event of accidental deployment.**

**Failure to follow procedures may result in personal injury.**

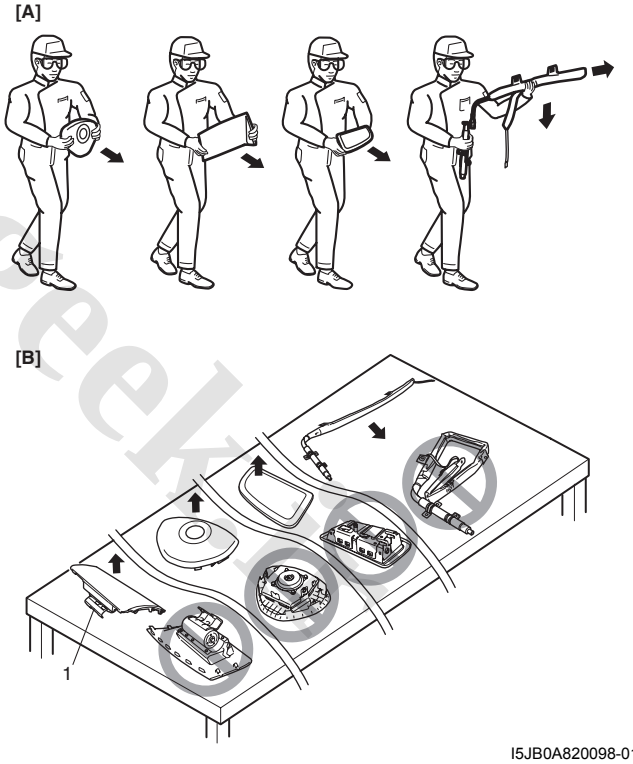


I5JB0A820098-01

| | |
|---|---|
| [A]: | Always carry air bag (inflator) module with trim cover (air bag opening) away from body. |
| [B]: | Always place air bag (inflator) module on workbench with trim cover (air bag opening) up, away from loose objects. |

www.cargeek.ir

www.CarGeek.ir

**⚠ WARNING**

- **For handling and storage of seat belt pretensioner, select place where ambient temperature is below 65 °C (150 °F), without high humidity and away from electric noise.**
- **Never carry seat belt pretensioner by webbing.**
- **When placing seat belt pretensioner on workbench or other surface, be sure to lay it with its exhaust hole (1) side facing up. It is also prohibited to put something on seat belt pretensioner.**

**Otherwise, personal injury may result.**

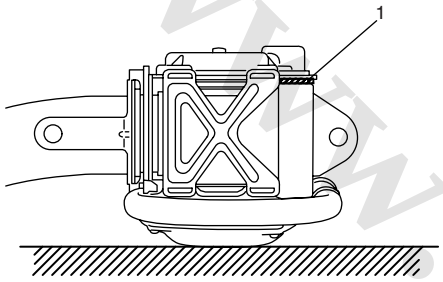


I4JA01822118-01

6) Set air bag (inflator) module or seat belt pretensioner as follows.
   - For driver air bag (inflator) module
     a. Clear space (3) on ground about 185 cm (6 ft) in diameter where driver air bag (inflator) module (1) is set for deployment. Paved, outdoor location where there is no activity is preferred. If outdoor location is not available, use space on shop floor where there is no activity and sufficient ventilation is provided. Ensure no loose or flammable object exists within deployment area.
     b. Place driver air bag (inflator) module (1) with its vinyl trim cover facing up (2) on ground in step a.

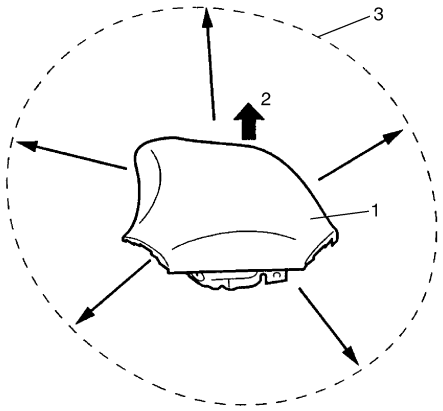


I3JA01820036-01

- For passenger air bag (inflator) module
  a. Clear space (3) on ground about 185 cm (6 ft) in diameter where passenger air bag (inflator) module (1) is set for deployment. Paved, outdoor location where there is no activity is preferred. If outdoor location is not available, use space on shop floor where there is no activity and sufficient ventilation is provided. Ensure no loose or flammable object exists within deployment area.
  b. Place deployment fixture (A) on ground in step a.

     **Special tool**
     **(A): 09932–75041**
  c. Fill plastic reservoir in deployment fixture (A) with water or sand. This is necessary to provide sufficient stabilization of fixture during deployment.
  d. Attach passenger air bag (inflator) module (1) in deployment fixture (A) securely using M8 bolt (2).

**⚠ CAUTION**

**Be sure to use M8 size and 7T strength bolt for fixing passenger air bag (inflator) module (1) to deployment fixture (A).**

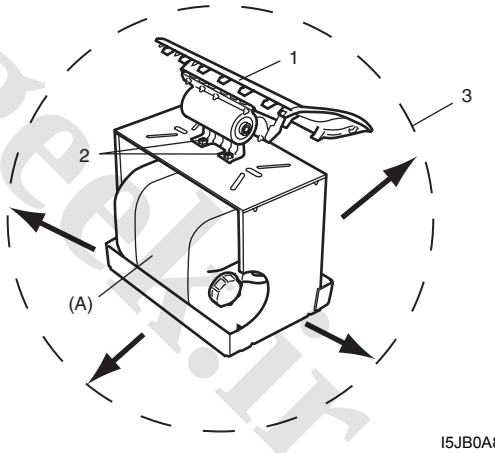


I5JB0A820099-01

www.cargeek.ir

www.CarGeek.ir


- For side-air bag (inflator) module
  a. Remove sleeve (1) and sleeve lock nut (2), if equipped.

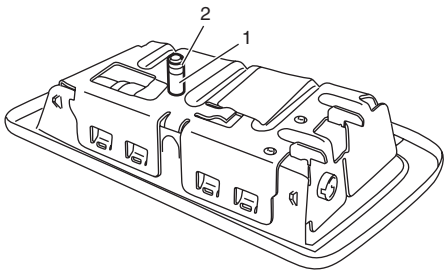


I4RS0A820088-01

  b. Clear space (3) on ground about 185 cm (6 ft) in diameter where side-air bag (inflator) module for deployment. Paved, outdoor location where there is no activity is preferred. If outdoor location is not available, space on shop floor where there is no activity and provide sufficient ventilation. Ensure no loose or flammable objects are within deployment area.
  c. Place deployment fixture (A) on ground.

     **Special tool**
     **(A): 09932–75041**

  d. Fill plastic reservoir in deployment fixture (A) with water or sand. This is necessary to provide sufficient stabilization of fixture during deployment.
  e. Attach side-air bag (inflator) module (1) in deployment fixture using mounting attachment, sleeve lock nut and washer (2).

**NOTE**

**Make sure that deploying direction faces as shown in figure against mounting attachment.**

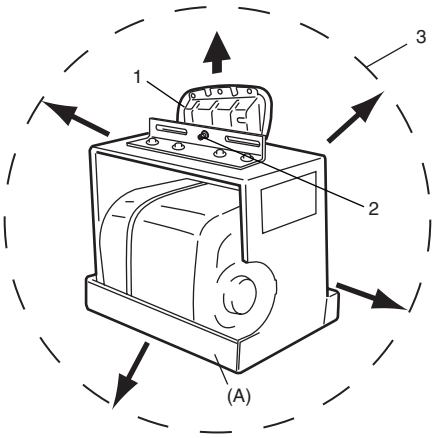


I4RS0A820089-01

- For side curtain-air bag (inflator) module
  a. Loosen nut (1) and remove bag (2) of side curtain-air bag (inflator) module.

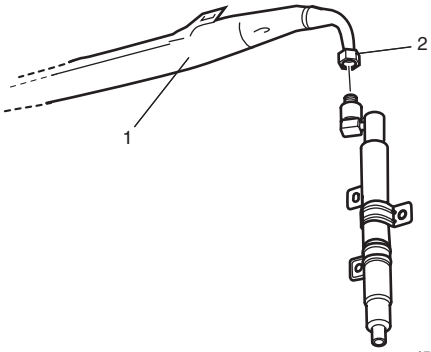


I5JB0A820100-01

  b. Tie side curtain-air bag inflator (1) to tire (3) with wire harness (2) as shown.

     **Wire harness specifications**
     **Stripped wire harness section 1.25 mm² (0.0019 in.²) or more (Stripped wire harness diameter 1.25 mm (0.05 in.) or more)**

**⚠ CAUTION**

**Make sure that wire harness is tight. It is very dangerous if looseness in wire harness results in side curtain-air bag inflator flying off due to shock from inflator deploying.**

**NOTE**

**Wind wire harness (2) around at least 3 times.**

  c. Clear space (5) on ground about 185 cm (6 ft) in diameter where side curtain-air bag (inflator) module (1) is set for deployment. Paved, outdoor location where there is no activity is preferred. If outdoor location is not available, use space on shop floor where there is no activity and sufficient ventilation is provided. Ensure no loose or flammable object exists within activation area.
  d. Pile tire with side curtain-air bag (inflator) module on tire (4).

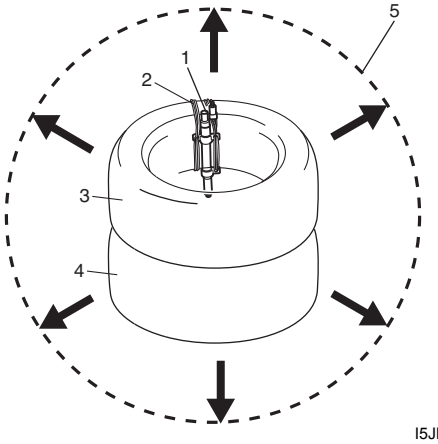


I5JB0A820101-01

www.cargeek.ir

www.CarGeek.ir

- For seat belt pretensioner
  a. Cut webbing (1) at tongue plate stopper (3) of seat belt pretensioner (2) side as shown.

**NOTE**

**Hold seat belt pretensioner (2) vertically in the same condition as it is installed. Otherwise, webbing can't be pulled out.**

  b. Remove tongue plate (4) and shoulder anchor (5) from webbing.
  c. Tie webbing (1) tightly at 10 cm (3.9 in.) from cutting edge as shown.

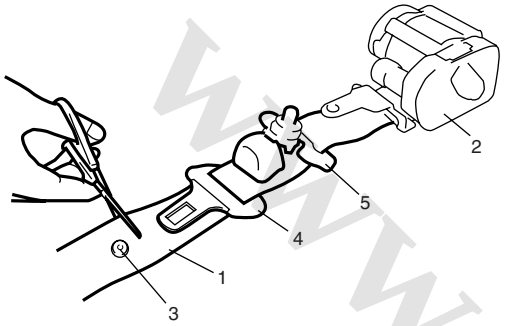

I3JA01820037-01

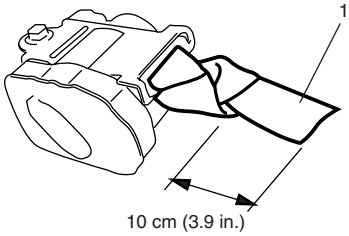

I4RS0A820104-01

  d. Tie seat belt pretensioner (2) with wire harness (3) to wheel-installed tire (4) as shown.

**Wire harness specifications**
**Stripped wire harness section 1.25 mm² (0.0019 in.²) or more (Stripped wire harness diameter 1.25 mm (0.05 in.) or more)**

**NOTE**

**Wind wire harness (3) around at least 3 times.**

  e. Clear space (5) on ground about 185 cm (6 ft) in diameter where seat belt pretensioner (2) is to be activated. Paved, outdoor location where there is no activity is preferred. If outdoor location is not available, use space on shop floor where there is no activity and sufficient ventilation is provided. Ensure no loose or flammable object exists within activation area.
  f. Place wheel-installed tire (4) with seat belt pretensioner (2) on ground in step e.

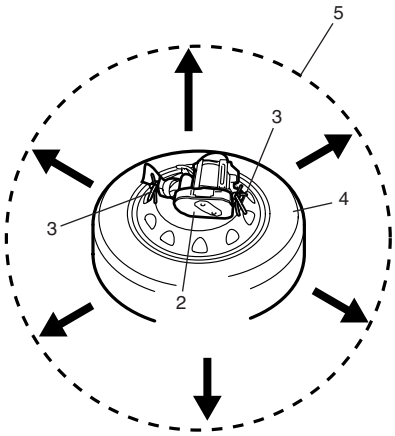

I4RS0A820105-01

1. Webbing

7) Stretch deployment harness (A) from air bag (inflator) module or seat belt pretensioner to its full length 10 m (33 ft).

**Special tool**
**(A): 09932–75031**

8) Place 12 volts vehicle battery (1) near the shorted end of deployment harness (A).
9) Check that area around air bag (inflator) module or seat belt pretensioner is clear of all people and loose or flammable objects.
10) Connect adapter cable (B) as follows.

**Special tool**
**(B): 09932–76510**

- For driver air bag (inflator) module [A]
  Check that driver air bag (inflator) module is placed with its vinyl trim cover facing up, and connect adapter cable (B) to driver air bag (inflator) module.
- For passenger air bag (inflator) module [B]
  Check that passenger air bag (inflator) module is firmly and properly secured on deployment fixture (special tool), and connect adapter cable (B) to passenger air bag (inflator) module.
- For side-air bag (inflator) module [C]
  Verify that side-air bag (inflator) module is firmly and properly on deployment fixture (special tool), and connect adapter cable (B) to side-air bag (inflator) module.

www.cargeek.ir

www.CarGeek.ir


- For side curtain-air bag (inflator) module [D]
  a. Connect adapter cable (B) to side curtain-air bag (inflator) module.
  b. Pile 2 tires (2) and wheel-installed tire (3) on top of tire with side curtain-air bag (inflator) (4), and tie them with wire harness (5) as shown.

     **Wire harness specifications**
     **Stripped wire harness section 1.25 mm² (0.0019 in.²) or more (Stripped wire harness diameter 1.25 mm (0.05 in.) or more)**

**NOTE**

**Wind wire harness (5) around at least 2 times.**

- For seat belt pretensioner [E]
  a. Connect adapter cable (B) to seat belt pretensioner.
  b. Pile 2 wheel-installed tires (3) on top of tire with seat belt pretensioner (6), and tie them with wire harness (5) as shown.

     **Wire harness specifications**
     **Stripped wire harness section 1.25 mm² (0.0019 in.²) or more (Stripped wire harness diameter 1.25 mm (0.05 in.) or more)**

**NOTE**

**Wind wire harness (5) around at least 2 times.**

  c. Drape blanket (7) over those tires.

11) Connect adapter cable (B) to deployment harness (A) connector and lock connectors with lock lever.

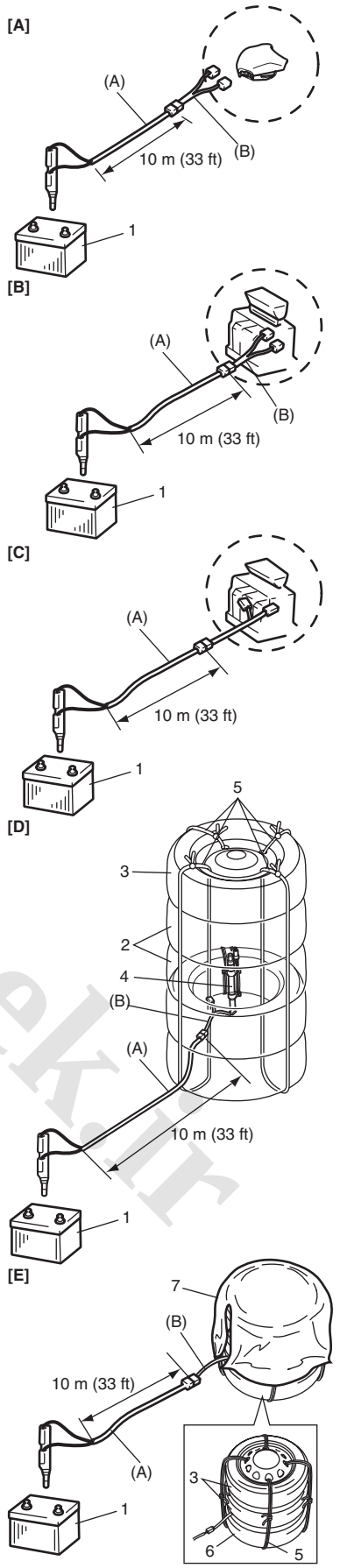


I5JB0A820102-01

www.cargeek.ir

www.CarGeek.ir

12) Notify all people in immediate area that you intend to deploy / activate air bag (inflator) module or seat belt pretensioner.

**NOTE**

- **When air bag (inflator) module deploys and seat belt pretensioner activates, rapid gas expansion will create substantial report. Wear suitable ear protection. Notify all people in immediate area that you intend to deploy air bag (inflator) module or activate seat belt pretensioner and suitable ear protection should be worn.**
- **When driver air bag (inflator) module deploys, driver air bag (inflator) module may jump about 30 cm (1 ft) vertically. This is normal reaction to force of rapid gas expansion inside of drive air bag (inflator) module.**
- **After air bag (inflator) module has been deployed, surface of air bag (inflator) may contain powdery residue. This powder consists primarily of cornstarch (used to lubricate bag (inflator) as it inflates) and byproducts of chemical reaction.**

**⚠ WARNING**

- **Do not place deployed air bag (inflator) module and activated seat belt pretensioner near any flammable objects.**
- **Do not apply water, oil, etc. to deployed air bag (inflator) module and activated seat belt pretensioner.**
- **Wait for about 30 minutes before touching any metal surface of air bag (inflater) module or seat belt pretensioner module. Disregarding these precautions may cause fire or personal injury.**

**Failure to follow procedures may result in fire or personal injury.**

13) Separate two banana plugs (1) on deployment harness.
14) Connect deployment harness to 12 volts vehicle battery (2). This will immediately deploy or activate air bag (inflator) module or seat belt pretensioner.
15) Disconnect deployment harness from 12 volts vehicle battery (2) and short two deployment harness leads together by fully seating one banana plug into the other.

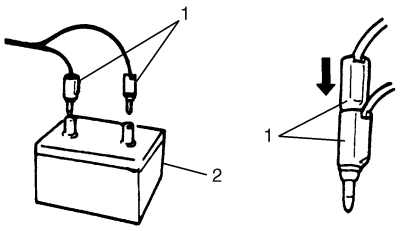


I2RH01820069-01

16) In the unlikely event that air bag (inflator) module or seat belt pretensioner did not deploy / activate after following these procedures, proceed immediately with Step 22) through 25). If air bag (inflator) module or seat belt pretensioner did deploy or activate, proceed with Steps 18) through 21).
17) Put on pair of shop gloves to protect your hands from possible irritation and heat when handling deployed air bag (inflator) module or activated seat belt pretensioner.
18) Disconnect adapter cable (special tool) from air bag (inflator) module or seat belt pretensioner as soon as possible. This will prevent adapter cable (special tool) from damage due to possible contact with hot air bag (inflator) module or hot seat belt pretensioner.
19) Check adapter cable as follows.
    - For air bag (inflator) module
      Be sure to check air bag (inflator) module adapter cable (special tool) for damage after deployment and replace it with new adapter cable (special tool), if it is damaged.
    - For seat belt pretensioner
      Be sure to check seat belt pretensioner adapter cable (special tool) for damage after seat belt pretensioner is activated. Replace it with spare connector (special tool) or new adapter, if necessary.
20) Dispose of deployed air bag (inflator) module (1) or activated seat belt pretensioner (2) through normal refuse channels after it has cooled for at least 30 minutes and tightly seal air bag (inflator) module (1) or seat belt pretensioner (2) in strong vinyl bag. Refer to “Deployed Air Bag (Inflator) Module and Activated Seat Belt Pretensioner Disposal: ” for details.

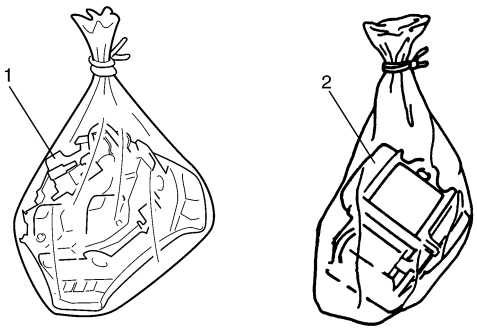


I3JA01820116-01

www.cargeek.ir

www.CarGeek.ir


21) Wash your hands with mild soap and water afterward.

**NOTE**

**Remaining steps are to be followed in the unlikely event that air bag (inflator) module did not deploy or seat belt pretensioner did not activate.**

22) Ensure that deployment harness has been disconnected from 12 volts vehicle battery and that its two banana plugs have been shorted together by fully seating one banana plug into the other.
23) Disconnect deployment harness and adapter cable from air bag (inflator) module or seat belt pretensioner.
24) Temporarily store undeployed air bag (inflator) module referring to “Precautions on Service and Diagnosis of Air Bag System: ” for details.
25) Contact your local distributor for further assistance.

**Deployment / Activation Inside of Vehicle**

When the vehicle will be destroyed, or salvaged for component parts, deploy the air bag modules and/or activate seat belt pretensioners installed on vehicle.

**NOTE**

**If equipped with the seat belt pretensioners, activate both side of seat belt pretensioners at the same time when using special tool (C).**

1) Turn ignition switch to LOCK position, remove key and put on safety glasses.
2) Remove all loose objects from front seats and instrument panel.
3) Disconnect air bag (inflator) module or seat belt pretensioner connector as follows.
   - For driver air bag (inflator) module [A]: Disconnect contact coil connector (1) located near base of steering column.
   - For passenger air bag (inflator) module [D]: Remove glove box from instrument panel and disconnect passenger air bag (inflator) module connector (2).
   - For side-air bag (inflator) module [E] Disconnect side-air bag (inflator) module connectors (3) under front seat cushion.
   - For side curtain-air bag (inflator) module [F] Remove rear pillar trim and disconnect side curtain-air bag (inflator) module connectors (4).
   - For seat belt pretensioners (right and left) [G] Remove both side (driver and passenger side) center pillar lower trim and disconnect seat belt pretensioner connectors (5).
4) Confirm that each air bag (inflator) module and/or seat belt pretensioners is securely mounted.

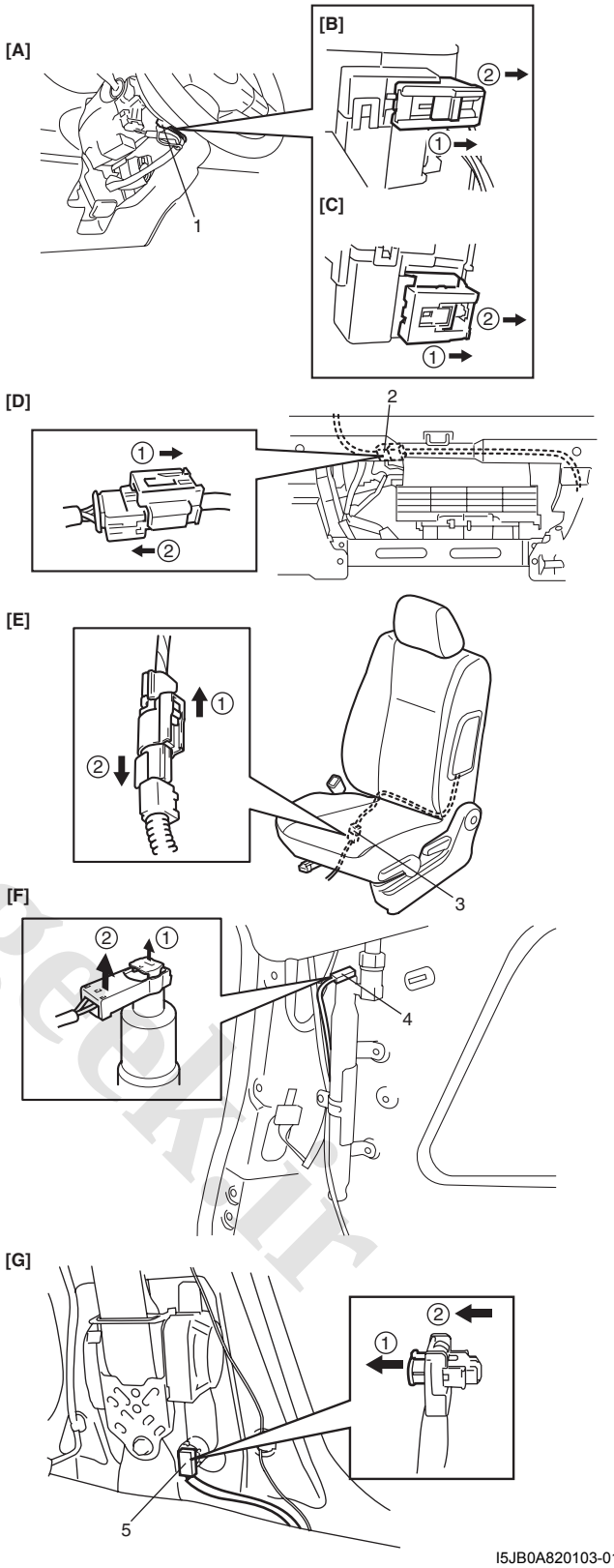


| | |
|---|---|
| [B]: | For vehicle without cruise control system |
| [C]: | For vehicle with cruise control system |

www.cargeek.ir

www.CarGeek.ir

5) Check that there is no open, short or damage in special tools (deployment harness (A), adapter cable (B), (C) and (D)). If any faulty condition is found, do not use it and be sure to use new special tool. And connect adapter cable (B), (C) or (D) to deployment harness (A) and lock connectors with lock slider.

**Special tool**
**(A): 09932–75031**
**(B): 09932–78332**
**(C): 09932–77310**
**(D): 09932–76510**

6) Short two deployment harness leads together by fully seating one banana plug (1) into the other.

**⚠ WARNING**

**Deployment harness (A) shall remain shorted and not be connected to 12 volts vehicle battery until you are ready to deploy air bag (inflator) module or activate seat belt pretensioner.**

7) Connect adapter cable (B), (C) or (D) in series with deployment harness (A) to air bag (inflator) module or seat belt pretensioner as follows.
- For driver air bag (inflator) module [A]
  Connect adapter cable (B) (For vehicle without cruise control system [B]) or (C) (For vehicle with cruise control system [C]) in series with deployment harness (A) and push adapter cable (B) or (C) connector to driver air bag (inflator) module connector till click can be heard.
- For passenger air bag (inflator) module [D]
  Connect adapter cable (C) in series with deployment harness (A) and push adapter cable (C) connector to passenger air bag (inflator) module connector till click can be heard.
- For side-air bag (inflator) module [E]
  Connect adapter cable (B) in series with deployment harness (A) and push adapter cable (C) connector to side bag (inflator) module connector till click can be heard.
- For side curtain-air bag (inflator) module [F]
  Connect adapter cable (D) in series with deployment harness (A) to curtain bag (inflator) module and lock connector with lock part.
- For seat belt pretensioners [G]
  Connect adapter cable (D) in series with deployment harness (A) to seat belt pretensioner and lock connector with lock part.

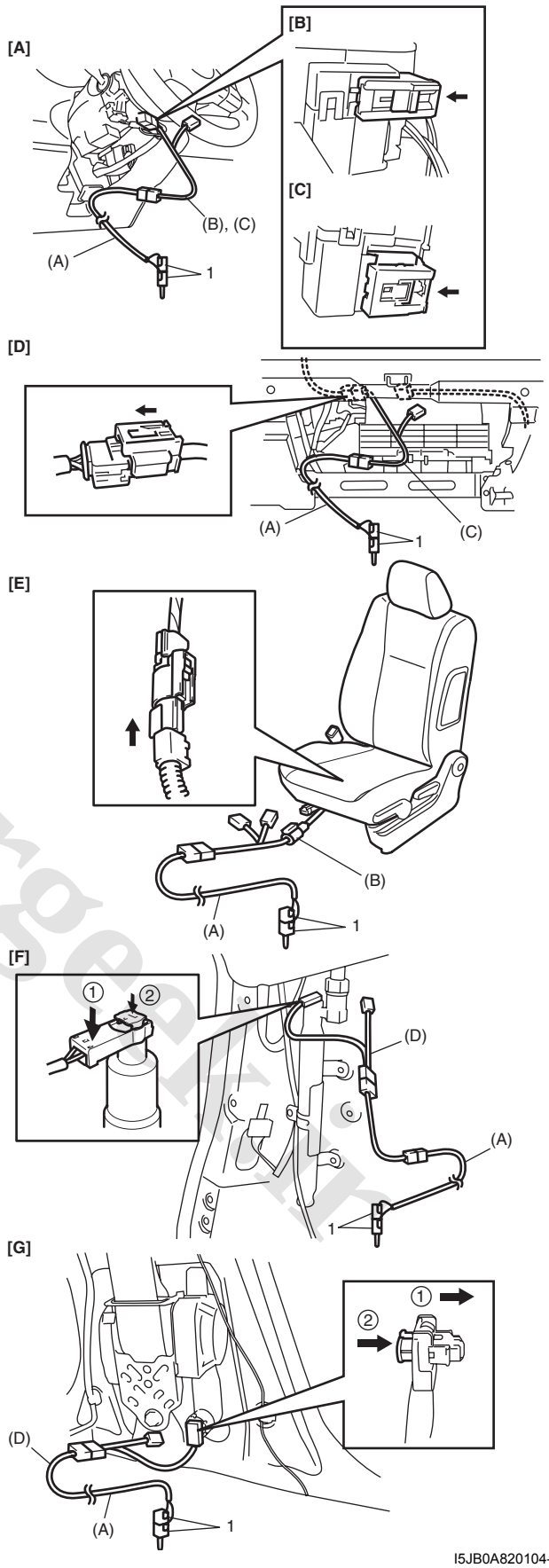


I5JB0A820104-01

www.cargeek.ir

www.CarGeek.ir


8) Route deployment harness (1) out of vehicle.
9) Check that inside of vehicle and area surrounding vehicle are clear of all people and loose or flammable objects.
10) Stretch deployment harness (1) to its full length 10 m (33 ft).
11) Place 12 volts vehicle battery (2) near shorted end of deployment harness (1).
12) Completely cover windshield area and front door window openings with drop cloth, a blanket or any similar item. This reduces possibility of injury due to possible fragmentation of vehicle's glass or interior.

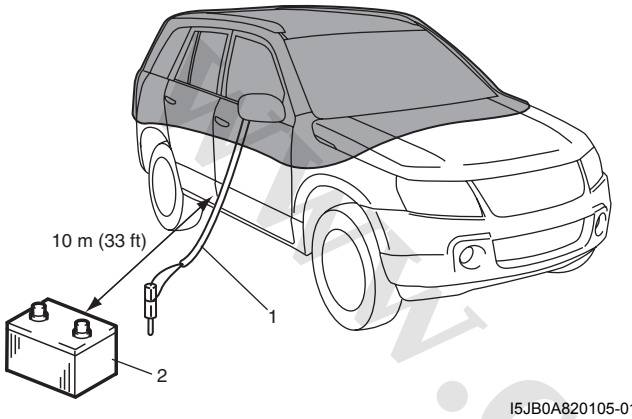

I5JB0A820105-01

13) Notify all people in immediate area that you intend to deploy air bag (inflator) module or activate seat belt pretensioners.

**NOTE**

- **When air bag (inflator) module deploys or seat belt pretensioners activate, rapid gas expansion will create substantial report. Wear suitable ear protection. Notify all people in immediate area that you intend to deploy air bag (inflator) module or to activate seat belt pretensioner and suitable ear protection should be worn.**
- **After air bag (inflator) module has been deployed, surface of air bag may contain powdery residue. This powder consists primarily of cornstarch (used to lubricate air bag (inflator) module as it inflates) and by-products of chemical reaction.**

**⚠ WARNING**

- **Do not place deployed air bag (inflator) module and activated seat belt pretensioners near any flammable objects.**
- **Do not apply water, oil, etc. to deployed air bag (inflator) module and activated seat belt pretensioners.**
- **Wait for about 30 minutes before touching any metal surface of air bag (inflater) module or seat belt pretensioner modules. Disregarding these precautions may cause fire or personal injury.**

**Failure to follow procedures may result in fire or personal injury.**

14) Separate two banana plugs (1) on deployment harness (2).
15) Connect deployment harness (2) to 12 volts vehicle battery (3). This will immediately deploy or activate air bag (inflator) module or seat belt pretensioners.
16) Disconnect deployment harness (2) from 12 volts vehicle battery (3) and short two deployment harness leads together by fully seating one banana plug into the other.

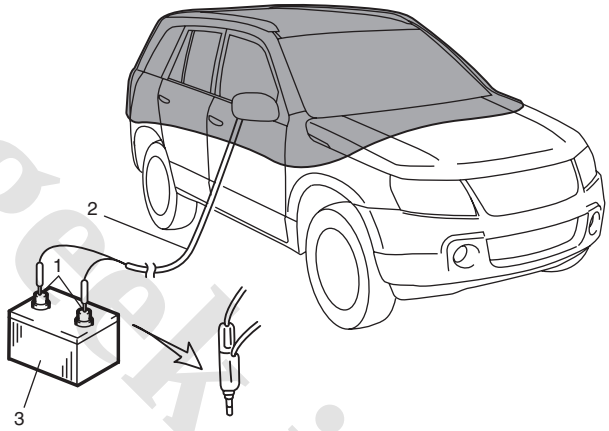

I5JB0A820106-01

17) Repeat Steps 3) through 16) to deploy / activate air bag (inflator) modules and seat belt pretensioners which has not been deployed / activated, if any.
18) In the unlikely event that air bag (inflator) module and seat belt pretensioners after following these procedures, proceed immediately with Step 24) through 26). If air bag (inflator) module and seat belt pretensioners did deploy / activate, proceed with Steps 19) through 23).
19) Carefully remove drop cloth from vehicle and clean off any fragments or discard it entirely.
20) Put on pair of shop gloves to protect your hands from possible irritation and heat when handling deployed air bag (inflator) module and activated seat belt pretensioners.

www.cargeek.ir

www.CarGeek.ir

21) Disconnect adapter cable (special tool) from air bag (inflator) module or seat belt pretensioner as soon as possible. This will prevent adapter cable (special tool) from damage due to possible contact with hot air bag (inflator) module or hot seat belt pretensioner.
22) Check adapter cable connector as follows.
Adapter cable connector (special tool) is designed to be reused. However it should be inspected for damage after deployment and replaced if necessary.
23) With air bag (inflator) modules deployed and seat belt pretensioners activated, vehicle may be scrapped in the same manner as non-air bag system / seat belt pretensioner equipped vehicle.

**NOTE**

**Remaining steps are to be followed in the unlikely event that air bag (inflator) module did not deploy or seat belt pretensioner did not activate.**

24) Remove undeployed air bag (inflator) module(s) and/ or inactivated seat belt pretensioner(s) from vehicle. For driver air bag (inflator) module, refer to “Driver Air Bag (Inflator) Module Removal and Installation: ”. For passenger air bag (inflator) module, refer to “Passenger Air Bag (Inflator) Module Removal and Installation: ”. For side air bag (inflator) module, refer to “Side-Air Bag (Inflator) Module Removal and Installation: ”. For side curtain-air bag (inflator) module, “Side Curtain-Air Bag (Inflator) Module Removal and Installation: ”. For seat belt pretensioner, refer to “Front Seat Belt Removal and Installation: in Section 8A”.
25) Temporarily store undeployed air bag (inflator) module referring to “Precautions on Service and Diagnosis of Air Bag System: ” for details.
26) Contact your local distributor for further assistance.

## Deployed Air Bag (Inflator) Module and Activated Seat Belt Pretensioner Disposal

S5JB0A8206019

**⚠ WARNING**

**Failure to follow proper air bag (inflator) module and seat belt pretensioner disposal procedures can result in air bag deployment and pretensioner activation which may cause personal injury. The undeployed air bag (inflator) module and the inactivated seat belt pretensioner must not be disposed of through normal refuse channels.**
**The undeployed air bag (inflator) module and the inactivated seat belt pretensioner contains substances that can cause severe illness or personal injury if the sealed container is damaged during disposal.**

Deployed air bag (inflator) module and the activated seat belt pretensioner can be disposed of through normal refuse channels just like any other parts. For their disposal, however, the following points should be noted.

- The air bag (inflator) module and the seat belt pretensioner immediately after deployment / activation is very hot. Wait for 30 minutes to cool it off before handling it.
- Never apply water, oil, etc. to deployed air bag (inflator) module and the activated seat belt pretensioner to cool it off and be careful so that water, oil etc. does not get on the deployed air bag (inflator) module and the activated seat belt pretensioner.

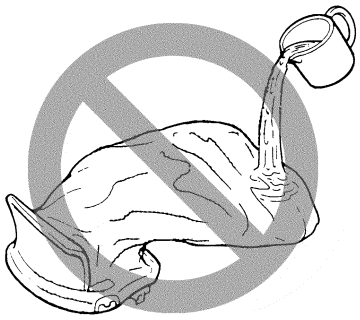

IYSQ01820095-01

- After the air bag (inflator) module has been deployed, the surface of the air bag may contain a powdery residue. This powder consists primarily of cornstarch (used to lubricate the bag as it inflates) and by-products of the chemical reaction. As with many service procedures, you should wear gloves and safety glasses.
- When disposing of the deployed air bag (inflator) module and the activated seat belt pretensioner, be sure to seal it in a vinyl bag.

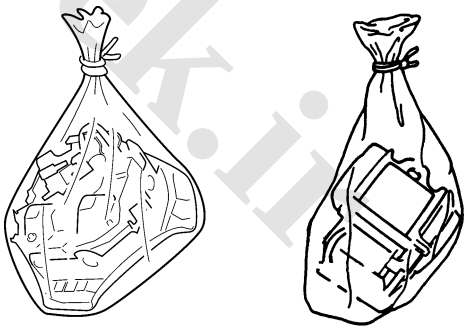

I3JA01820119-01

- When air bag (inflator) module and seat belt pretensioner have been deployed / activated inside the vehicle which is going to be scrapped, leave them as installed to the vehicle.
- Be sure to wash your hands with mild soap and water after handling them.

www.cargeek.ir

www.CarGeek.ir


# Specifications

## Tightening Torque Specifications

S5JB0A8207001

| Fastening part | Tightening torque | | | Note |
|---|---|---|---|---|
| | N·m | kgf-m | lb-ft | |
| SDM bolt | 6 | 0.6 | 4.5 | ☞ |
| Driver air bag (inflator) module mounting bolt | 9 | 0.9 | 6.5 | ☞ |
| Passenger air bag (inflator) module attaching bolt | 23 | 2.3 | 16.5 | ☞ |
| Sleeve lock nut | 2.5 | 0.25 | 2.0 | ☞ |
| Side curtain-air bag (inflator) module bolts | 10 | 1.0 | 7.5 | ☞ |
| Forward-sensor mounting bolt | 11 | 1.1 | 8.0 | ☞ |
| Side-sensor bolt | 11 | 1.1 | 8.0 | ☞ |

**NOTE**

**The specified tightening torque is also described in the following.**
**“Air Bag System Components, Wiring and Connectors Location: ”**

**Reference:**
For the tightening torque of fastener not specified in this section, refer to “Fastener Information: in Section 0A”.

# Special Tools and Equipment

## Use of Special Tools

S5JB0A8208001

**⚠ WARNING**

**To avoid deployment when troubleshooting the air bag system, do not use electrical test equipment such as a battery powered or AC powered voltmeter, ohmmeter, etc., or any type of electrical equipment other than that specified. Do not use a non-powered probe type tester.**
**Instructions must be followed carefully, otherwise personal injury may result.**

You should be familiar with the tools listed under the heading “Special Tool”. You should be able to measure voltage and resistance. You should be familiar with proper use of a scan tool such as Air Bag Driver / Passenger Load Tool, Connector Test Adapter Kit and the Digital Multimeter.

**Special tool**
**(A): 09932–76010 (Connector Test Adapter Kit)**

This must be used whenever a diagnostic procedure requests checking or probing a terminal.
Using the appropriate adapter in the special tool will ensure that no damage to the terminal will occur from the multimeter probe, such as spreading or bending.

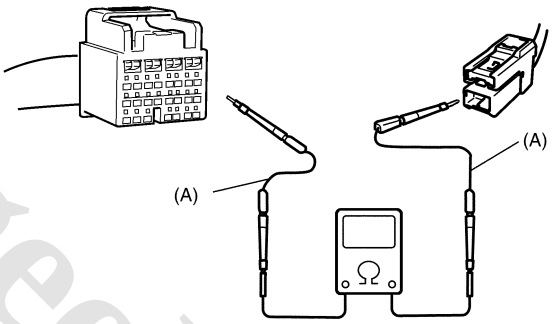

I5JB0A820107-01

The adapter (1) will also give an idea of whether or not contact tension is sufficient, helping to find an open or intermittent open due to poor terminal contact. An SDM short bar release tool (2) is included in the connector test adapter kit. Inserting it into the SDM connector (3) will releases the shorting bar.

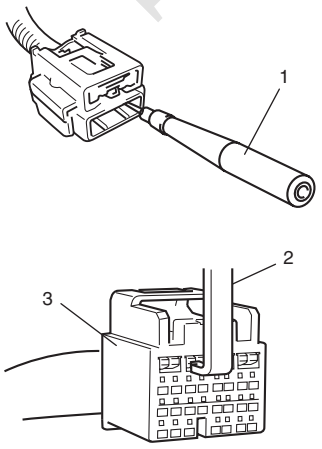

I5JB0A820108-01

www.cargeek.ir

www.CarGeek.ir

**Special tool**
**(B): 09932–75010 (Air bag driver / passenger load tool)**

This tool is used as a diagnostic aid and safety device to prevent inadvertent air bag (inflator) module deployment. The load tool has three connectors attached to its case which are electrically functional and serve as resistive load substitutions.
No more than two connectors are used at any time.
One of connectors (“STEERING WHEEL”) is used to substitute the load of the followings.

- Driver air bag (inflator) module when it is connected at the top of the column to the contact coil assembly.
- Passenger air bag (inflator) module when it is connected to the air bag harness connector in instrument panel harness for passenger air bag (inflator) module.
- Each of driver and passenger seat belt pretensioners when it is connected to air bag harness connector in instrument panel harness for driver and passenger seat belt pretensioners.
- Side-air bag (inflator) module when it is connected to the floor harness connector for side-air bag (inflator) module.
- Side curtain-air bag (inflator) module when it is connected to the floor harness connector for side curtain-air bag (inflator) module.

Another connector (“BASE OF COLUMN”) is used to substitute the load of the driver air bag (inflator) module and the contact coil assembly when it is connected at the base of the column to the air bag wire harness.
The third connector (“PASSENGER INFLATOR”) is not used.
By substituting the resistance of the load tool when called for, a determination can be made as to whether an inflator circuit component is causing system malfunction and which component is causing the malfunction.
The load tool should be used only when specifically called for in the diagnostic procedures.

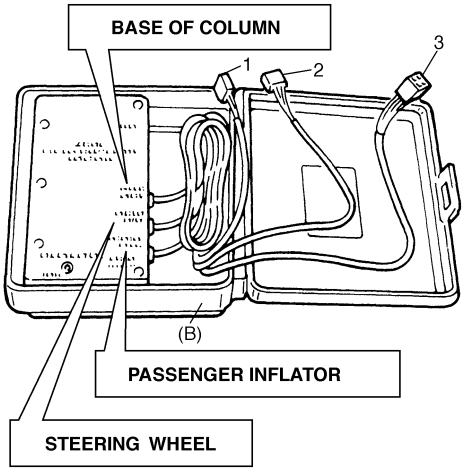


I1JA01820004-01

| | |
|---|---|
| 1. | Connector for contact coil and driver air bag (inflator) module (Located near the base of the steering column) |
| 2. | Connector for driver, passenger air bag (inflator) module, side-air bag (inflator) module and driver and passenger seat belt pretensioners |
| 3. | Not used |

## Recommended Service Material

S5JB0A8208002

| Material | SUZUKI recommended product or Specification | | Note |
|---|---|---|---|
| Thread lock cement | Thread Lock Cement 1305 | P/No.: 99000–32100 | ☞ |

www.cargeek.ir

www.CarGeek.ir


## Special Tool

S5JB0A8208003

| | |
|---|---|
| 09932–75010<br>Air bag load tool<br>☞ / ☞ / ☞ / ☞ / ☞ / ☞ / ☞ /<br>☞ / ☞ / ☞ / ☞ / ☞ / ☞ / ☞ /<br>☞ / ☞ / ☞ / ☞ / ☞ / ☞ / ☞ /<br>☞ / ☞ / ☞ / ☞ / ☞ / ☞ / ☞ /<br>☞ / ☞ / ☞ / ☞ / ☞ / ☞ / ☞ /<br>☞ / ☞ / ☞ / ☞ / ☞ / ☞ / ☞ /<br>☞ / ☞ / ☞ / ☞ / ☞ / ☞ / ☞ /<br>☞ / ☞ / ☞ / ☞ / ☞ / ☞ / ☞ /<br>☞ 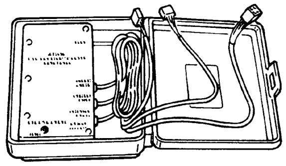 | 09932–75031<br>Air bag deployment harness<br>☞ / ☞ / ☞ 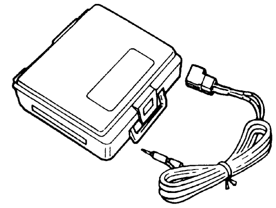 |
| 09932–75041<br>Passenger air bag (inflator) module deployment fixture<br>☞ / ☞ 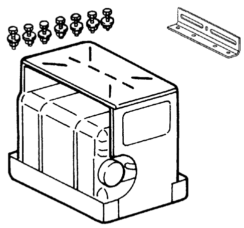 | 09932–76010<br>Connector test adapter set<br><br>This set includes the following items. 1. Connector test adapter kit (09932-75020), 2. Connector test adapter & shorting bar release tool (09932-76020) ☞ / ☞ / ☞ /<br>☞ / ☞ / ☞ / ☞ / ☞ / ☞ / ☞ /<br>☞ / ☞ / ☞ / ☞ / ☞ / ☞ / ☞ /<br>☞ / ☞ / ☞ / ☞ / ☞ / ☞ / ☞ /<br>☞ / ☞ / ☞ / ☞ / ☞ / ☞ / ☞ /<br>☞ / ☞ / ☞ / ☞ / ☞ / ☞ / ☞ /<br>☞ / ☞ / ☞ / ☞ / ☞ / ☞ / ☞ /<br>☞ / ☞ / ☞ / ☞ / ☞ / ☞ / ☞ 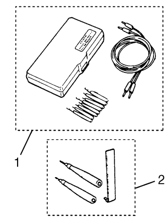 |
| 09932–76510<br>Deployment adapter cable<br><br>☞ / ☞ / ☞ 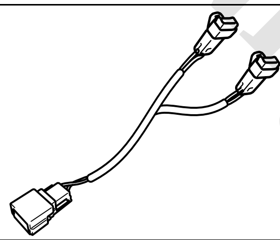 | 09932–77310<br>Deployment adapter cable 4P<br>☞ 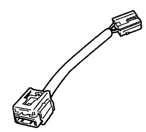 |
| 09932–77320<br>Diagnosis adapter cable 4P<br>☞ / ☞ / ☞ / ☞ / ☞ / ☞ / ☞ /<br>☞ / ☞ / ☞ / ☞ / ☞ / ☞ / ☞ /<br>☞ / ☞ / ☞ / ☞ / ☞ / ☞ / ☞ /<br>☞ / ☞ / ☞ / ☞ / ☞ / ☞ / ☞ 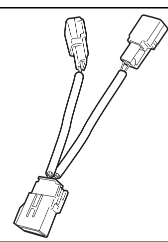 | 09932–78310<br>Adapter cable<br>☞ / ☞ / ☞ / ☞ / ☞ / ☞ / ☞ /<br>☞ / ☞ / ☞ / ☞ / ☞ / ☞ / ☞ /<br>☞ / ☞ / ☞ / ☞ / ☞ / ☞ / ☞ /<br>☞ / ☞ / ☞ / ☞ / ☞ / ☞ / ☞ 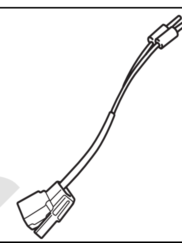 |
| 09932–78332<br>Deployment adapter cable<br>☞ 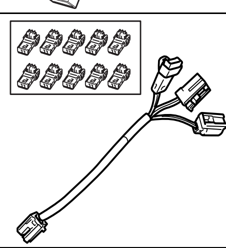 | 09932–78340<br>Deployment adapter cable<br>☞ / ☞ / ☞ / ☞ / ☞ / ☞ / ☞ /<br>☞ / ☞ / ☞ / ☞ / ☞ / ☞ / ☞ /<br>☞ / ☞ / ☞ / ☞ / ☞ / ☞ 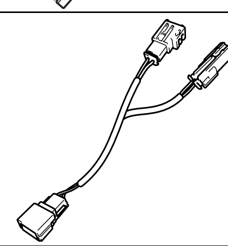 |

www.cargeek.ir

www.cargeek.ir

www.CarGeek.ir

| | | |
|---|---|---|
| SUZUKI scan tool<br>—<br>This kit includes following items. 1. Tech 2, 2. PCMCIA card, 3. DLC cable, 4. SAE 16/19 adapter, 5. Cigarette cable, 6. DLC loopback adapter, 7. Battery power cable, 8. RS232 cable, 9. RS232 adapter, 10. RS232 loop back connector, 11. Storage case, 12. Power supply ☞ / ☞ | 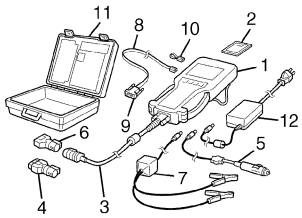 | |

www.cargeek.ir

www.cargeek.ir

www.CarGeek.ir


# Section 9

# Body, Cab and Accessories

## CONTENTS


**Precautions ..... 9-1**
**Precautions ..... 9-1**
Precautions on Body, Cab and Accessories ..... 9-1
Precautions for Body Service ..... 9-1
Fastener Caution for Body Service ..... 9-1

**Wiring Systems ..... 9A-1**
**Precautions ..... 9A-1**
Cautions in Body Electrical System Servicing ..... 9A-1
Precautions for Wiring System ..... 9A-1
**General Description ..... 9A-2**
Abbreviations ..... 9A-2
Wire / Connector Color Symbols ..... 9A-2
Symbols and Marks ..... 9A-3
How to Read Connector Layout Diagram ..... 9A-5
How to Read Connector Codes and Terminal Nos. ..... 9A-6
How to Read Ground Point ..... 9A-9
How to Read Power Supply Diagram ..... 9A-10
How to Read System Circuit Diagram ..... 9A-11
**Harness Routing and Connector Layout Diagram ..... 9A-13**
Connector Layout Diagram ..... 9A-13
Engine Compartment ..... 9A-13
C: Engine harness (M16A RHD) ..... 9A-13
C: Engine harness (M16A LHD) ..... 9A-14
C: Engine harness (J20A RHD) ..... 9A-15
C: Engine harness (J20A LHD) ..... 9A-17
B: A/C compressor wire / E: Main harness, Front height sensor wire (RHD) ..... 9A-18
B: A/C compressor wire / E: Main harness, Front height sensor wire (LHD) ..... 9A-20
Instrument Panel ..... 9A-22
E: Main harness, Controller wire (RHD) ..... 9A-22
E: Main harness, Controller wire (LHD) ..... 9A-23
B: A/C wire / F: Console wire / G: Instrument panel harness / Q: A/B wire (RHD) ..... 9A-24
B: A/C wire / F: Console wire / G: Instrument panel harness / Q: A/B wire (LHD) ..... 9A-25
Door, Roof ..... 9A-27
J: Front and rear door wire, rear door joint wire / K: Roof wire (RHD, 5dr) ..... 9A-27
J: Front and rear door wire, rear door joint wire / K: Roof wire (LHD, 5dr) ..... 9A-28
J: Front and rear door wire / K: Roof wire (RHD, 3dr) ..... 9A-29
J: Front and rear door wire / K: Roof wire (LHD, 3dr) ..... 9A-30
Floor ..... 9A-31
L: Floor harness, Rear height sensor wire / R: Fuel pump wire (RHD, 5dr) ..... 9A-31
L: Floor harness, Rear height sensor wire / R: Fuel pump wire (LHD, 5dr) ..... 9A-32
L: Floor harness, Luggage compartment light wire, Rear height sensor wire / R: Fuel pump wire (RHD, 3dr) ..... 9A-34
L: Floor harness, Luggage compartment light wire, Rear height sensor wire / R: Fuel pump wire (LHD, 3dr) ..... 9A-35
Rear ..... 9A-37
O: Rear end door harness ..... 9A-37
**Ground Point ..... 9A-38**
Ground (earth) Point ..... 9A-38
**Power Supply Diagram ..... 9A-39**
Power Supply Diagram ..... 9A-39
Fuses and the Protected Parts ..... 9A-43
Fuses in Battery Fuse Box, Fuse Box No.1 ..... 9A-43
Fuse Box No.2 (In Power Integration No.1, Power Integration No.2), Relay Box ..... 9A-44
Fuse Box No.3 (In J/B) ..... 9A-45
Junction Block (J/B) Connector / Fuse Layout ..... 9A-47
Fuse side ..... 9A-47
Junction Block Inner Circuit (Overview) ..... 9A-48
Junction Block Inner Circuit (Detail) ..... 9A-49
**System Circuit Diagram ..... 9A-53**
System Circuit Diagram ..... 9A-53
A-1 Cranking System Circuit Diagram ..... 9A-54
A-2 Charging System Circuit Diagram ..... 9A-55
A-3 Ignition System Circuit Diagram (M16A) ..... 9A-56
A-3 Ignition System Circuit Diagram (J20A) ..... 9A-57
A-4 Cooling System Circuit Diagram ..... 9A-58
A-5 Engine and A/C Control System Circuit Diagram (M16A) ..... 9A-59
A-5 Engine and A/C Control System Circuit Diagram (J20A) ..... 9A-64
A-6 A/T Control System Circuit Diagram ..... 9A-69
A-7 Immobilizer System Circuit Diagram ..... 9A-71
A-8 Body Control System Circuit Diagram ..... 9A-72
A-10 4WD Control System Circuit Diagram ..... 9A-77
B-1 Windshield Wiper and Washer Circuit Diagram ..... 9A-79
B-2 Rear Wiper and Washer Circuit Diagram ..... 9A-80
B-3 Rear Defogger Circuit Diagram ..... 9A-81
B-4 Power Window Circuit Diagram ..... 9A-82
B-5 Power Door Lock Circuit Diagram ..... 9A-84
B-6 Power Mirror Circuit Diagram ..... 9A-86
B-7 Horn Circuit Diagram ..... 9A-87




www.cargeek.ir

www.CarGeek.ir

B-8 Seat Heater Circuit Diagram....9A-88
B-9 Smart Key System Circuit Diagram....9A-89
B-10 Sliding Roof Circuit Diagram....9A-90
B-11 Headlight Cleaner Circuit Diagram....9A-91
C-1 Combination Meter Circuit Diagram....9A-92
D-1 Headlight System Circuit Diagram (One bulb type)....9A-94
D-1 Headlight System Circuit Diagram (With Projector light)....9A-95
D-1 Headlight System Circuit Diagram (With Discharge bulb)....9A-96
D-2 Position, Tail and Licence Plate Light System Circuit Diagram....9A-97
D-3 Front Fog Light System Circuit Diagram....9A-98
D-4 Illumination Light System Circuit Diagram....9A-99
D-5 Interior Light System Circuit Diagram....9A-100
D-6 Turn Signal and Hazard Warning Light System Circuit Diagram....9A-101
D-7 Brake Light System Circuit Diagram....9A-103
D-8 Back-Up Light System Circuit Diagram....9A-104
D-9 Headlight Beam Leveling System Circuit Diagram (Manual Leveling)....9A-105
D-9 Headlight Beam Leveling System Circuit Diagram (Auto Leveling)....9A-106
D-10 Rear Fog Light Circuit Diagram....9A-107
E-2 Auto A/C System Circuit Diagram....9A-108
F-1 Air-Bag System Circuit Diagram (Without side A/B and Curtain A/B)....9A-110
F-1 Air-Bag System Circuit Diagram (With side A/B and Curtain A/B)....9A-111
F-2 Anti-Lock Brake System Circuit Diagram..9A-113
G-1 Audio System Circuit Diagram....9A-115
G-2 Multi Information Display / Accessory Socket System Circuit Diagram....9A-116
G-4 Navigation System Circuit Diagram....9A-117
**List of Connectors....9A-118**
List of Connectors....9A-118
B Connector....9A-118
C Connector....9A-118
E Connector....9A-120
F Connector....9A-122
G Connector....9A-122
J Connector....9A-125
K Connector....9A-126
L Connector....9A-127
O Connector....9A-129
Q Connector....9A-129
R Connector....9A-129

## Lighting Systems .... 9B-1

**Precautions....9B-1**
Precautions for Discharge Headlight Service (If Equipped)....9B-1
Precautions in Diagnosing Troubles (Vehicle Equipped with Auto Leveling Headlight System)....9B-1
**General Description....9B-2**
Discharge Headlight Description (If Equipped)....9B-2
Auto Leveling Headlight System Description (If Equipped)....9B-3
Auto-On Headlight System Description (If Equipped)....9B-5
D.R.L. System Description (If Equipped)....9B-6
**Schematic and Routing Diagram....9B-6**
Headlight Auto Leveling System wiring Circuit Diagram....9B-6
**Component Location....9B-7**
Lighting System Components Location....9B-7
Interior Light System Location....9B-8
**Diagnostic Information and Procedures....9B-8**
Self-Diagnosis Function for Auto Leveling Headlight System....9B-8
Headlight Leveling Warning Light Check....9B-8
Headlight Symptom Diagnosis (Vehicle Equipped With Discharge Headlight)....9B-9
Headlight Symptom diagnosis (Vehicle Not Equipped With Discharge Headlight)....9B-9
Auto-On Headlight System Symptom Diagnosis (If Equipped)....9B-10
DRL System Symptom Diagnosis (If Equipped)....9B-10
Headlight Auto Leveling System Symptom Diagnosis (If Equipped)....9B-11
Headlight Manual Leveling System Symptom Diagnosis (If Equipped)....9B-11
Turn Signal and Hazard Warning Light Symptom Diagnosis....9B-11
Clearance, Tail and License Plate Light Symptom Diagnosis....9B-12
Back-Up Light Symptom Diagnosis....9B-12
Stop (Brake) Lamp Symptom Diagnosis....9B-13
Front Fog Light (If Equipped) Symptom Diagnosis....9B-13
Rear Fog Light Symptom Diagnosis (If Equipped)....9B-13
Illumination Cancel System Symptom Diagnosis (If Equipped)....9B-13
Interior Light Symptom Diagnosis....9B-14
Auto-On Headlight Operation Inspection (If Equipped)....9B-14
DRL Operation Inspection (If Equipped)....9B-14
Inspection of Headlight Leveling Control Module and Its Circuit (Vehicle Equipped With Auto Leveling Headlight System)....9B-15
**Repair Instructions....9B-17**
Headlight Housing Removal and Installation....9B-17
Headlight Bulb Replacement....9B-17
Ballast Removal and Installation....9B-18
Igniter Removal and Installation....9B-19
Headlight Aiming Adjustment with Screen....9B-19
Headlight Switch (in Lighting Switch) Removal and Installation....9B-21
Headlight Switch (in Lighting Switch) Inspection....9B-21
Hazard Warning Switch Removal and Installation....9B-22
Hazard Warning Switch Inspection....9B-22

www.cargeek.ir

www.CarGeek.ir


Stop (Brake) Lamp Switch Inspection ..... 9B-22
Turn Signal Light Switch (in Lighting Switch) Removal and Installation ..... 9B-23
Turn Signal Light Switch (in Lighting Switch) Inspection ..... 9B-23
Turn Signal and Hazard Warning Relay Removal and Installation ..... 9B-23
Turn Signal and Hazard Warning Relay Inspection ..... 9B-23
License Lamp Assembly Removal and Installation ..... 9B-24
Front Fog Light Assembly Removal and Installation (If Equipped) ..... 9B-24
Front Fog Light Bulb Replacement (If Equipped) ..... 9B-24
Front Fog Light Switch Inspection (If Equipped) ..... 9B-25
Front Fog Light Relay Inspection (If Equipped) ..... 9B-25
Front Fog Light Aiming Adjustment with Screen (If Equipped) ..... 9B-25
Headlight Manual Leveling Switch (If Equipped) Inspection ..... 9B-26
Headlight Leveling Actuator Inspection (If Equipped) ..... 9B-27
Rear Fog Light Switch Inspection (If Equipped) ..... 9B-27
Height Sensor Removal and Installation (If Equipped) ..... 9B-28
Height Sensor and Its Circuit Inspection (If Equipped) ..... 9B-29
Leveling Control Module Removal and Installation (If Equipped) ..... 9B-29
Initialization of Auto Leveling Headlight System ..... 9B-29
Illumination Cancel Switch (If Equipped) Inspection ..... 9B-30
Auto-On Headlight Sensor Inspection (If Equipped) ..... 9B-31
**Specifications ..... 9B-31**
Tightening Torque Specifications ..... 9B-31

## Instrumentation / Driver Info. / Horn ..... 9C-1

**Precautions ..... 9C-1**
Precautions in Diagnosing Troubles for Combination Meter ..... 9C-1
**General Description ..... 9C-1**
CAN Communication Data of Combination Meter ..... 9C-1
**Schematic and Routing Diagram ..... 9C-2**
Combination Meter Circuit Diagram ..... 9C-2
**Component Location ..... 9C-3**
Audio System Component Location ..... 9C-3
**Diagnostic Information and Procedures ..... 9C-4**
Speedometer Symptom Diagnosis ..... 9C-4
Tacho meter Symptom Diagnosis ..... 9C-4
Engine Coolant Temperature (ECT) Meter Symptom Diagnosis ..... 9C-4
Fuel Meter Symptom Diagnosis ..... 9C-4
Low Fuel Warning Light Symptom Diagnosis ..... 9C-5
Oil Pressure Warning Light Symptom Diagnosis ..... 9C-5
Brake and Parking Brake Warning Light Symptom Diagnosis ..... 9C-6
Seat Belt Reminder Light Symptom Diagnosis (If Equipped) ..... 9C-6
Illumination Indicator Symptom Diagnosis ..... 9C-7
Headlight Auto Leveling Indicator Symptom Diagnosis (If Equipped) ..... 9C-7
A/T Power Mode Indicator Symptom Diagnosis (A/T Model Only) ..... 9C-7
A/T Shift Position Indicator (A/T Model Only) Symptom Diagnosis ..... 9C-8
Charge Warning Light Symptom Diagnosis ..... 9C-8
Main Beam (High Beam) Indicator Symptom Diagnosis ..... 9C-8
Warning Buzzer Circuit Symptom Diagnosis ..... 9C-9
Cigarette Lighter Symptom Diagnosis (If Equipped) ..... 9C-9
Horn Symptom Diagnosis ..... 9C-9
Information Display Symptom Diagnosis (If Equipped) ..... 9C-10
Clock Symptom Diagnosis (If Equipped) ..... 9C-10
Audio System Symptom Diagnosis (If Equipped) ..... 9C-11
Remote Audio Control Switch Symptom Diagnosis (If Equipped) ..... 9C-12
Navigation Symptom Diagnosis (If Equipped) ..... 9C-12
**Repair Instructions ..... 9C-12**
Ignition Switch Removal and Installation ..... 9C-12
Ignition Switch Inspection ..... 9C-13
Combination Meter Removal and Installation ..... 9C-13
Fuel Level Sensor Removal and Installation ..... 9C-13
Fuel Level Sensor Inspection ..... 9C-14
Oil Pressure Switch Removal and Installation ..... 9C-14
Oil Pressure Switch Inspection ..... 9C-15
Engine Coolant Temperature (ECT) Sensor Inspection ..... 9C-15
Brake Fluid Level Switch Inspection ..... 9C-15
Parking Brake Switch Inspection ..... 9C-15
Door Switch (Front / Rear / Rear End Door) Inspection ..... 9C-16
Outside Air Temperature Sensor Removal and Installation (If Equipped) ..... 9C-16
Outside Air Temperature Sensor Inspection (If Equipped) ..... 9C-16
Instrument Panel Removal and Installation ..... 9C-16
Information Display (Clock) Removal and Installation ..... 9C-18
Audio Unit Removal and Installation ..... 9C-18
Front Speaker Removal and Installation ..... 9C-19
Rear Speaker Removal and Installation (5 Door Model) ..... 9C-19
Rear Speaker Removal and Installation (3 Door Model) ..... 9C-19

www.cargeek.ir

www.CarGeek.ir

GPS Antenna Removal and Installation (If Equipped) ..... 9C-20
Horn Removal and Installation ..... 9C-20
Horn Inspection ..... 9C-20
Horn Relay Inspection ..... 9C-20
Antenna Base Removal and Installation ..... 9C-21
Remote Audio Control Switch Removal and Installation ..... 9C-21
Remote Audio Control Switch Inspection ..... 9C-22
**Specifications ..... 9C-22**
Tightening Torque Specifications ..... 9C-22

## Wipers / Washers ..... 9D-1

**Diagnostic Information and Procedures ..... 9D-1**
Front Wiper and Washer Symptom Diagnosis ..... 9D-1
Rear Wiper and Washer Symptom Diagnosis (If Equipped) ..... 9D-1
Headlight Washer Symptom Diagnosis (If Equipped) ..... 9D-2
Headlight Washer Operation Inspection ..... 9D-2
Inspection of Headlight Washer Control Module and Its Circuit ..... 9D-3
**Repair Instructions ..... 9D-4**
Wipers and Washers Components ..... 9D-4
Washer Tank and Washer Pump Removal and Installation ..... 9D-5
Washer Pump Inspection ..... 9D-5
Windshield Wiper Removal and Installation ..... 9D-6
Windshield Wiper Motor Inspection ..... 9D-7
Rear Wiper Removal and Installation (If Equipped) ..... 9D-8
Rear Wiper Motor Inspection (If Equipped) ..... 9D-9
Windshield Wiper and Washer Switch Removal and Installation ..... 9D-10
Windshield Wiper and Washer Switch Inspection ..... 9D-11
Rear Wiper and Washer Switch Removal and Installation ..... 9D-12
Rear Wiper and Washer Switch Inspection ..... 9D-12
Rear Wiper Relay Removal and Installation ..... 9D-12
Rear Wiper Relay Inspection ..... 9D-13
Headlight Washer Switch Inspection (If Equipped) ..... 9D-13
Headlight Washer Pump Removal and Installation (If Equipped) ..... 9D-13
Headlight Washer Nozzle Removal and Installation (If Equipped) ..... 9D-13
**Specifications ..... 9D-14**
Tightening Torque Specifications ..... 9D-14

## Glass / Windows / Mirrors ..... 9E-1

**General Description ..... 9E-1**
Rear End Door Window Defogger System Description ..... 9E-1
Windshield Construction ..... 9E-1
Rear Quarter Window Construction ..... 9E-2
**Diagnostic Information and Procedures ..... 9E-3**
Rear End door Window Defogger Symptom Diagnosis ..... 9E-3
Power Window Control System Symptom Diagnosis ..... 9E-4
Power Door Mirror Control System Symptom Diagnosis (If Equipped) ..... 9E-4
Door Mirror Heater Symptom Diagnosis (If Equipped) ..... 9E-4
**Repair Instructions ..... 9E-5**
Windshield Removal and Installation ..... 9E-5
Rear Quarter Window Removal and Installation ..... 9E-8
Front Door Window Components ..... 9E-13
Front Door Glass Removal and Installation ..... 9E-14
Front Door Window Regulator Removal and Installation ..... 9E-15
Front Door Window Regulator Inspection ..... 9E-15
Rear Door Window Components ..... 9E-16
Rear Door Glass Removal and Installation ..... 9E-16
Rear Door Window Regulator Removal and Installation ..... 9E-17
Rear Door Window Regulator Inspection ..... 9E-18
Rear End Door Window Components ..... 9E-18
Rear End Door Glass Removal and Installation ..... 9E-19
Rear End Door Window Defogger Relay Inspection ..... 9E-19
Rear End Door Window Defogger Wire Inspection ..... 9E-20
Rear End Door Window Defogger Wire Repair ..... 9E-20
Power Window Main Switch Inspection ..... 9E-20
Power Window Sub Switch Inspection ..... 9E-22
Door Mirror Components ..... 9E-22
Door Mirror Removal and Installation ..... 9E-23
Power Door Mirror Switch Inspection (If Equipped) ..... 9E-23
Power Door Mirror Actuator Inspection (If Equipped) ..... 9E-23
Door Mirror Heater Inspection (If Equipped) ..... 9E-23
Door Mirror Heater Relay Inspection (If Equipped) ..... 9E-24
**Special Tools and Equipment ..... 9E-24**
Recommended Service Material ..... 9E-24

## Security and Locks ..... 9F-1

**General Description ..... 9F-1**
Key Coding Construction ..... 9F-1
**Component Location ..... 9F-1**
Power Door Lock and Keyless Entry System Component Location ..... 9F-1
**Diagnostic Information and Procedures ..... 9F-2**
Power Door Lock System Symptom Diagnosis ..... 9F-2
Power Door Lock System Operation Inspection ..... 9F-2
Keyless Entry System Symptom Diagnosis (If Equipped) ..... 9F-3
Keyless Entry System Operation Inspection ..... 9F-4

www.cargeek.ir

www.CarGeek.ir


Door Lock Function of Keyless Start System Symptom Diagnosis (If Equipped) ..... 9F-4
**Repair Instructions ..... 9F-4**
Front Door Lock Assembly Components ..... 9F-4
Front Door Lock Assembly Removal and Installation ..... 9F-5
Front Door Lock Assembly Inspection ..... 9F-6
Power Door Lock Switch Inspection..... 9F-7
Door Key Cylinder Switch Inspection ..... 9F-7
Power Door Lock Actuator Inspection (If Equipped)..... 9F-7
Rear Door Lock Assembly Components ..... 9F-9
Rear Door Lock Assembly Removal and Installation ..... 9F-10
Rear Door Lock Assembly Inspection ..... 9F-10
Rear End Door Lock Assembly Components..... 9F-11
Rear End Door Lock Assembly Removal and Installation ..... 9F-11
Rear End Door Lock Assembly Inspection..... 9F-12
Replacement of Transmitter Battery ..... 9F-12
Programming Transmitter Code for Keyless Entry System (Vehicle without Keyless Start System) ..... 9F-13
Keyless Entry Receiver Removal and Installation ..... 9F-13
Keyless Entry Receiver and Its Circuit Inspection..... 9F-14
**Specifications..... 9F-15**
Tightening Torque Specifications..... 9F-15
**Special Tools and Equipment ..... 9F-15**
Recommended Service Material ..... 9F-15

## Seats ..... 9G-1
**Diagnostic Information and Procedures.....9G-1**
Front Seat Heater Symptom Diagnosis (If Equipped).....9G-1
**Repair Instructions .....9G-1**
Front Seat Components.....9G-1
Front Seat Removal and Installation.....9G-2
Front Seat Heater Switch (Driver and Passenger Side) Inspection (If Equipped) .....9G-2
Front Seat Heater Wire Inspection (If Equipped).....9G-2
Rear Seat Components .....9G-3
Rear Seat Removal and Installation .....9G-3
**Specifications.....9G-3**
Tightening Torque Specifications.....9G-3

## Interior Trim ..... 9H-1
**Repair Instructions .....9H-1**
Floor Carpet Removal and Installation.....9H-1
Head Lining Removal and Installation .....9H-1
Console Box Components .....9H-4

## Sun Roof / T-Top / Convertible Top .....9I-1
**General Description ..... 9I-1**
Power Sliding (Sun) Roof System Description ..... 9I-1
**Diagnostic Information and Procedures ..... 9I-1**
Power Sliding (Sun) Roof System Symptom Diagnosis ..... 9I-1
**Repair Instructions ..... 9I-1**
Sliding (Sun) Roof Glass Components ..... 9I-1
Sliding (Sun) Roof Glass Removal and Installation ..... 9I-2
Sliding (Sun) Roof Glass Adjustment..... 9I-2
Sliding (Sun) Roof Switch Inspection ..... 9I-2
Sliding (Sun) Roof Motor Removal and Installation ..... 9I-3
Sliding (Sun) Roof System Circuit and Motor Inspection..... 9I-3
Sliding (Sun) Roof Assembly Components ..... 9I-4
Sliding (Sun) Roof Assembly Removal and Installation ..... 9I-5
Sliding (Sun) Roof Assembly Disassembly and Reassembly ..... 9I-6

## Hood / Fenders / Doors .....9J-1
**Repair Instructions ..... 9J-1**
Hood Removal and Installation ..... 9J-1
Hood Inspection and Adjustment ..... 9J-1
Front Fender Components ..... 9J-2
Front Fender Removal and Installation ..... 9J-2
Front Door Assembly Components ..... 9J-3
Front Door Assembly Removal and Installation ..... 9J-4
Rear Door Assembly Components..... 9J-5
Rear Door Assembly Removal and Installation ..... 9J-5
Rear End Door Assembly Components ..... 9J-6
Rear End Door Assembly Removal and Installation ..... 9J-7
**Specifications ..... 9J-8**
Tightening Torque Specifications..... 9J-8
**Special Tools and Equipment ..... 9J-8**
Recommended Service Material ..... 9J-8

## Body Structure..... 9K-1
**Repair Instructions .....9K-1**
Front Bumper Components.....9K-1
Rear Bumper Components .....9K-2
Cowl Top Components.....9K-3
**Specifications.....9K-4**
Body Dimensions .....9K-4
Panel Clearance.....9K-14

## Paint / Coatings .....9L-1
**General Description .....9L-1**
Anti-Corrosion Treatment Construction..... 9L-1
Plastic Parts Finishing..... 9L-2
**Component Location .....9L-2**
Sealant Application Areas ..... 9L-2
Under Coating Application Areas ..... 9L-12
Anti-Corrosion Compound Application Area ..... 9L-16

## Exterior Trim .....9M-1
**Repair Instructions ..... 9M-1**

www.cargeek.ir

www.CarGeek.ir

Roof Drip Molding Removal and Installation (If Equipped) ..... 9M-1
Roof Rail Removal and Installation (If Equipped)..... 9M-2
Splash Guard Removal and Installation (If Equipped)..... 9M-3

www.cargeek.ir

www.cargeek.ir

www.CarGeek.ir


# Precautions

## Precautions

### Precautions on Body, Cab and Accessories

S5JB0A9000001

**Air Bag Warning**
Refer to “Air Bag Warning: in Section 00”.

**Fastener Caution**
Refer to “Fastener Caution: in Section 00”.

**Precautions for Body Service**
Refer to “Precautions for Body Service: ”.

**Fastener Caution for Body Service:**
Refer to “Fastener Caution for Body Service: ”.

**Cautions in Body Electrical System Servicing**
Refer to “Cautions in Body Electrical System Servicing: in Section 9A”.

**Precautions for Wiring System**
Refer to “Precautions for Wiring System: in Section 9A”.

### Precautions for Body Service

S5JB0A9000002

**⚠ WARNING**

**For vehicles equipped with a Supplemental Restraint (Air Bag) System:**
**When servicing vehicle body, if shock may be applied to air bag system component parts, remove those parts beforehand.**

### Fastener Caution for Body Service

S5JB0A9000003

**⚠ CAUTION**

- **Fasteners are important attaching parts in that they could affect the performance of vital components and systems, and/or could result in major repair expense. They must be replaced with one of the same part number of with an equivalent part if replacement become necessary.**
- **Do not use a replacement part of lesser quality or substitute a design. Torque values must be used as specified during reassembly to assure proper retention of these parts.**

www.cargeek.ir

www.CarGeek.ir

# Wiring Systems

## Precautions

### Cautions in Body Electrical System Servicing

S5JB0A9100001

When performing works related to electric systems, observe the cautions described in “Precautions for Electrical Circuit Service: in Section 00” for the purpose of protection of electrical parts and prevention of a fire from occurrence.

### Precautions for Wiring System

S5JB0A9100002

**⚠ WARNING**

**(For the vehicles with the Supplemental Restraint System (Air Bags) and/or the Seat Belt Pretensioner System)**
**Service on or around the air bag system / Seat belt pretensioner system components or their wiring must be performed only by an authorized SUZUKI dealer. Observe all the warnings of the “Air Bag System” and disable the systems before performing the service. Failure to follow the Warnings could result in unintended activation of the systems or could render the systems inoperative. Either of these two conditions may result in severe injury.**

**⚠ CAUTION**

**To prevent damage to the electrical/ electronic parts (especially computers or semi-conductors) or to prevent fire:**

- When disconnecting the battery terminals, be sure to
  1: turn off the ignition switch and all other switches,
  2: disconnect the negative (–) terminal wire and then
  3: disconnect the positive (+) terminal wire.
  Connect the wires in the reverse order of disconnecting.
- When disconnecting the connectors, be sure to unlock the connector lock (if equipped) and then pull the connector shells to detach them. Do not pull the wires.
- Connect the connectors by holding the connector shells. Make sure they are securely locked.
- Install the wiring harness securely without any slack.
- When installing parts, make sure the wiring harness is not interfered with or pinched by them.
- Avoid routing the wiring harness near or around a sharp corner or edge of the vehicle body or parts as much as possible. If necessary, protect the wiring harness by winding tape or the like around on it.
- When replacing a fuse, make sure to use the specified capacity fuse. Using a fuse with a larger capacity can cause damage to the electrical parts or a fire.
- Do not handle electrical/ electronic parts (computer, relay, etc.) roughly or drop them.
- Do not expose electrical/ electronic parts to high temperature (Approximately 80 °C (176 °F) or higher) or water.
- Be sure to insert the tester probe (or, if necessary, an appropriate needle or wire designed for the inspection work) into the back side (wiring harness side) of the connector for inspection not to damage or deform the terminal of the connector.

www.cargeek.ir

www.CarGeek.ir


# General Description

## Abbreviations

S5JB0A9101002

| Abbreviation | Full term | Abbreviation | Full term |
|---|---|---|---|
| 2WD | 2 wheel drive vehicles | IG | Ignition |
| 4WD | 4 wheel drive vehicles | IG COIL | Ignition coil |
| A/B | Air bag | ILL | Illumination |
| A/C | Air conditioning | IND | Indicator |
| A/LEV | Auto leveling | INT | Intermittent |
| A/T | Automatic transaxle | ISC | Idle speed control |
| ACC | Accessory | J/B | Junction block |
| BCM | Body control module | J/C | Joint connector |
| CAN | Controller area network | L | Left |
| CKP | Crank shaft position | LED | Light emitting diode |
| CMP | Cam shaft position | LHD | Left hand drive vehicle |
| COMB | Combination | LO | Low |
| DLC | Data link connector | MAP | Manifold absolute pressure |
| DRL | Daytime running light | M/T | Manual transaxle |
| DSL | Diesel engine | AMT | Automated manual transmission |
| ECM | Engine control module | O/D | Over drive |
| ECT | Engine coolant temperature | P/N | Power/Normal |
| EGR | Exhaust gas recirculation | P/S | Power steering |
| ELCM | EVAP leak check module | PSP | Power steering pressure |
| ESP | Electronic stability program | R | Right |
| EVAP | Evaporative | RHD | Right hand drive vehicle |
| FWD | Forward | SDM | Sensing and diagnostic module |
| HI | High | ST | Starter |
| HID | High intensity discharge | TCC | Torque converter clutch |
| HLC | Head light cleaner | TCM | Transmission control module |
| IAC | Idle air control | VSS | Vehicle speed sensor |
| IAT | Intake air temperature | VSV | Vacuum switching valve |
| ICM | Immobilizer control module | 5 dr | 5 door |
| IF EQPD | If equipped | | |

## Wire / Connector Color Symbols

S5JB0A9101003

| Symbol | Wire / connector Color | Symbol | Wire / connector Color |
|---|---|---|---|
| BLK | Black | ORN | Orange |
| BLU | Blue | RED | Red |
| BRN | Brown | WHT | White |
| GRN | Green | YEL | Yellow |
| GRY | Gray | PNK | Pink |
| LT BLU | Light blue | PPL | Purple |
| LT GRN | Light green | N | Natural |

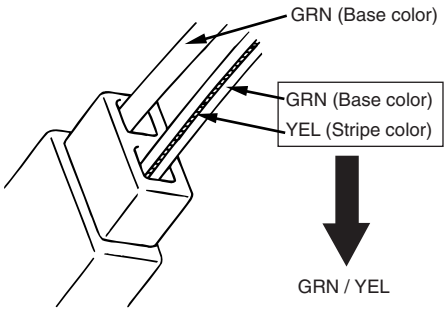

I2RH01910941-01

www.cargeek.ir

www.CarGeek.ir

## Symbols and Marks

S5JB0A9101004

| Battery | Ground | | Normal fuse | Slow blow fuse |
|---|---|---|---|---|
| I2RH01910910-01 | IYSQ01910915-01 | IYSQ01910916-01 | IYSQ01910917-01 | IYSQ01910918-01 |
| Circuit breaker | Coil, Solenoid | Heater | Bulb | |
| IYSQ01910919-01 | IYSQ01910920-01 | IYSQ01910921-01 | IYSQ01910922-01 | IYSQ01910923-01 |
| Cigarette lighter | Motor | Pump | Horn | Speaker |
| IYSQ01910924-01 | IYSQ01910925-01 | IYSQ01910926-01 | I2RH01910911-01 | IYSQ01910928-01 |
| Buzzer | Chime | Condenser | Thermistor | Reed switch |
| IYSQ01910929-01 | IYSQ01910930-01 | IYSQ01910931-01 | IYSQ01910932-01 | IYSQ01910933-01 |
| Resistance | Variable resistance | | Transistor | |
| IYSQ01910934-01 | IYSQ01910935-01 | IYSQ01910936-01 | IYSQ01910937-01<br>NPN | IYSQ01910938-01<br>PNP |
| Photo transistor | Diode | Zener diode | Light emitting diode | Photo diode |
| IYSQ01910939-01 | IYSQ01910940-01 | IYSQ01910941-01 | IYSQ01910942-01 | IYSQ01910943-01 |
| Piezoelectric element | Harness | | Ring terminal | Connector |
| IYSQ01910944-01 | IYSQ01910945-01<br>Connected | IYSQ01910946-01<br>Not connected | IYSQ01910947-01 | IYSQ01910948-01 |
| Relay | | Switch | | |
| IYSQ01910949-01<br>Normal open | IYSQ01910950-01<br>Normal closed | IYSQ01910951-01<br>Open switch | IYSQ01910952-01<br>Closed switch | |

www.cargeek.ir

| Ignition switch | Keyless entry | Immobilizer system | Combination meter | Lighting switch |
|---|---|---|---|---|
| I2RH01910912-01 | I3JA01910902-01 | I5RH01910901-01 | 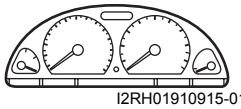 I2RH01910915-01 | 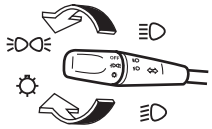 I2RH01910916-01 |
| **Headlight leveling** | **Hazard warning light** | **Front fog light** | **Rear fog light** | **Spark plug** |
| I3JA01910904-01 | I3JA01910905-01 | I3JA01910906-01 | I3JA01910907-01 | I2RH01910921-01 |
| **Radiator fan** | **Fuel pump** | **Injector** | **XX control module** | **Windshield wiper** |
| I2RH01910922-01 | I3JA01910908-01 | 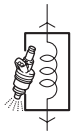 I2RH01910924-01 | 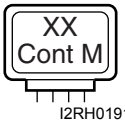  I2RH01910925-01 | I3JA01910909-01 |
| **Windshield washer** | **Rear wiper** | **Rear washer** | **Rear defogger** | **Power window** |
| I3JA01910910-01 | I3JA01910911-01 | I3JA01910912-01 | I2RH01910930-01 | I3JA01910913-01 |
| **Power door lock** | **Power mirror** | **A/B** | **Pretensioner** | **Passenger side** |
| I3JA01910914-01 | I3JA01910915-01 | I3JA01910916-01 | I3JA01910917-01 | I3JA01910918-01 |
| **Driver side** | **Seat heater** | **A/C** | **Power steering** | **Side air-bag (R)** |
| I3JA01910919-01 | I2RH01910938-01 | I3JA01910920-01 | I3JA01910921-01 | I4JA01910901-01 |
| **Side air-bag (L)** | **Side curtain air-bag (R)** | **Side curtain air bag (L)** | **Glow plug** | |
| I4JA01910902-01 | I5RS0A910958-01 | I5RS0A910959-01 | I4JA01910903-01 | |

www.CarGeek.ir

www.CarGeek.ir

## How to Read Connector Layout Diagram

S5JB0A9101005

**[A-1]: Harness symbol and corresponding harness name**
A: Battery harness
B: A/C harness
C: Engine harness
D: Injector harness
E: Main harness, Oil pressure switch wire, Console wire
G: Instrument panel harness
J: Side door wire (Power window)
K: Interior light harness, Rear speaker wire, Roof wire
L: Floor harness, G sensor wire (Fuel pump harness)
M: Rear bumper harness
O: Rear end door harness
Q: Air bag/Pretensioner harness
R: (Fuel pump wire)
**[A-2]: Connector Number**
**[B]: Ground point No.**

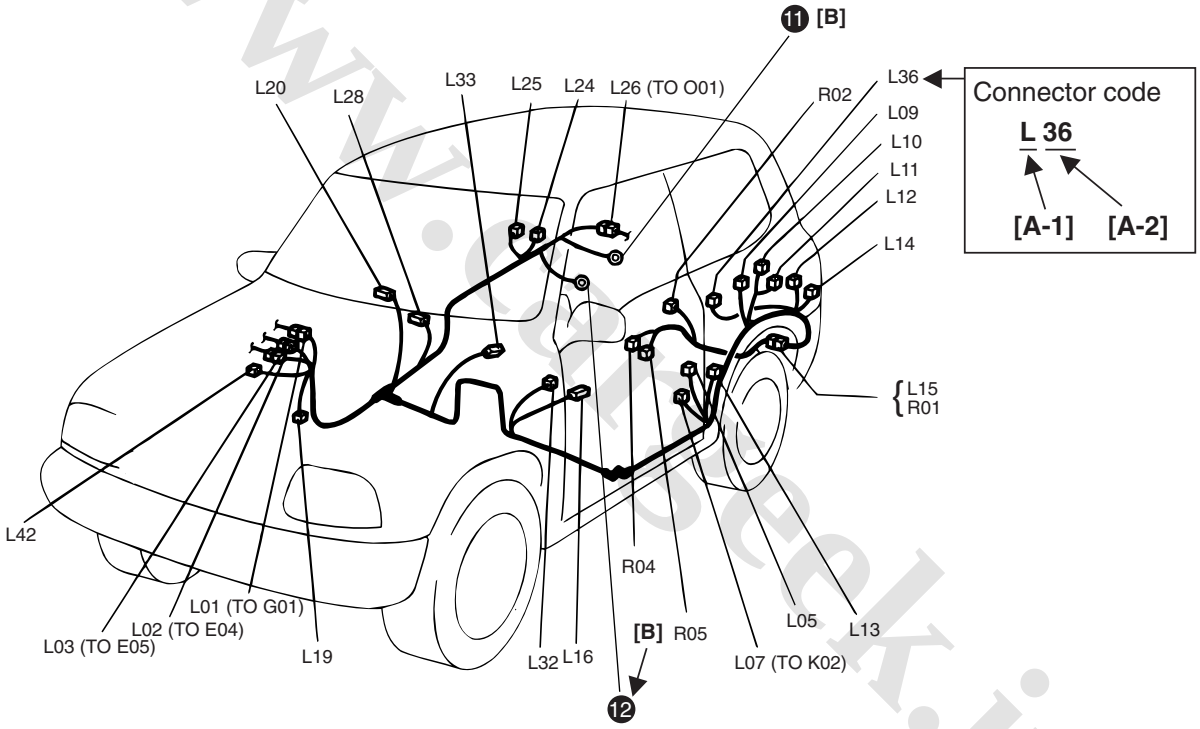


I2RH01910901-01

www.cargeek.ir

www.CarGeek.ir


## How to Read Connector Codes and Terminal Nos.

S5JB0A9101006

1) Connector code/Terminal No./Terminal layout

- The connector shape and terminal layout shown in this manual are those when viewed from “Z” in the illustration.
  Refer to “List of Connectors: ”.

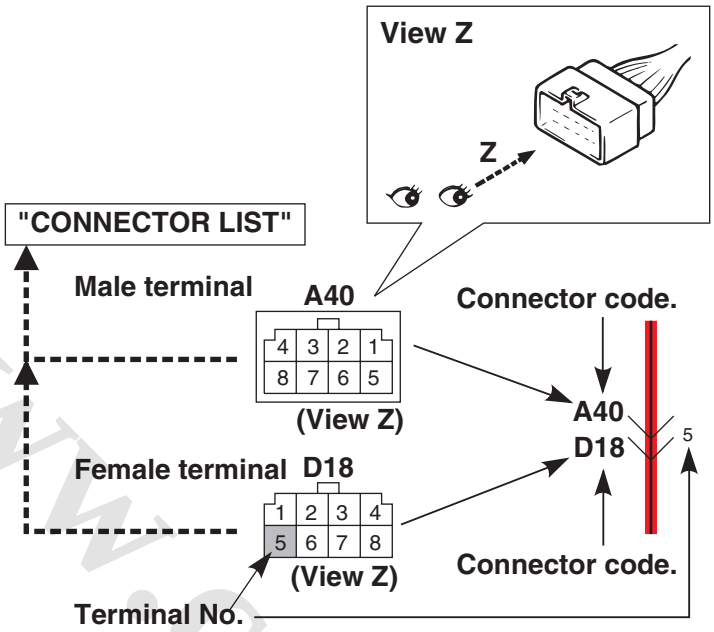


I5RS0A910901-01

**NOTE**

**Molded terminal numbers that are different from the above can be found on some connectors in rare cases.**
**These molded numbers are not applied in this manual.**

2) Connector type

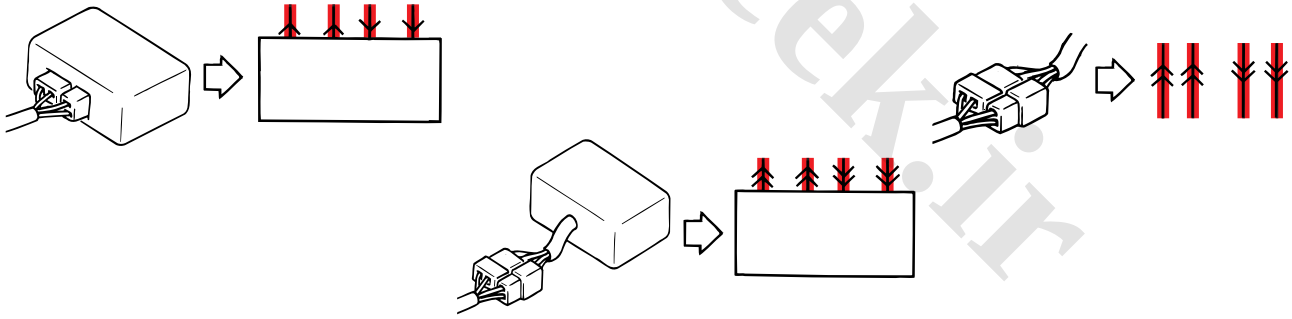

I2RH01910903-01

www.cargeek.ir

www.CarGeek.ir

3) Terminals in one connector (Broken line) (B15)/Terminals in different connectors (B14, B16)

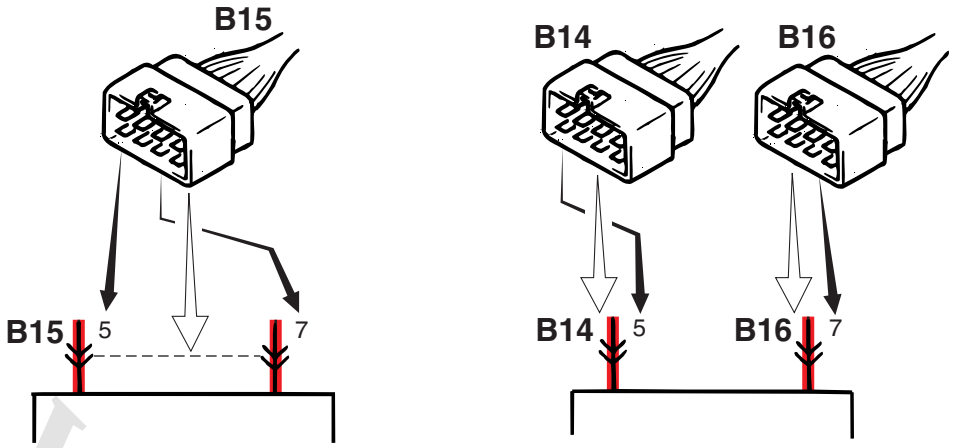


I2RH01910904-01

4) Joint connector (J/C)

- The joint connector (J/C) connects several different wires with the same wire color at one place instead of connecting them by welding or caulking one by one. It is not an ordinary connector but a part of the continuous wire in the harness.

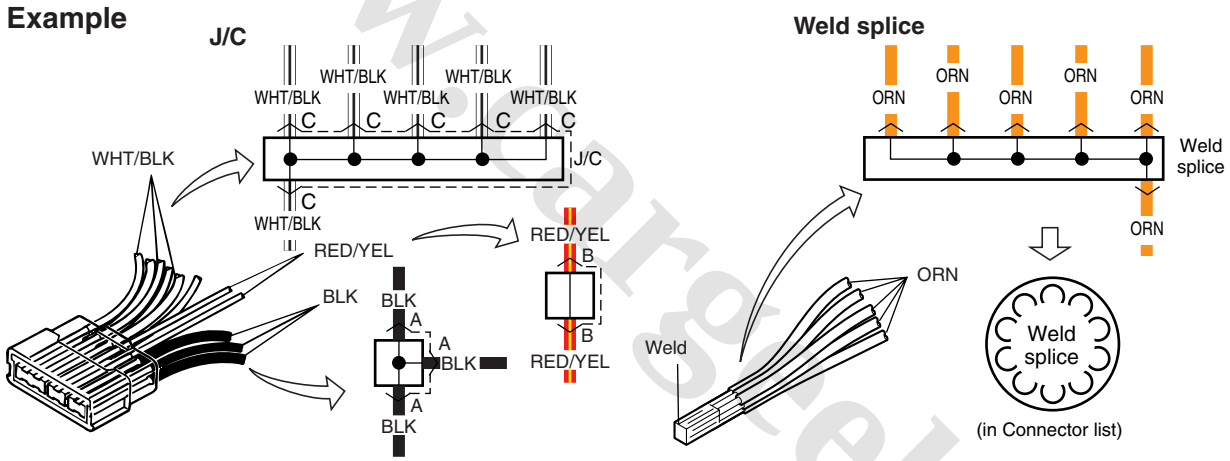


I4RS0A910902-01

www.cargeek.ir

5) Junction block (J/B)

**Example**

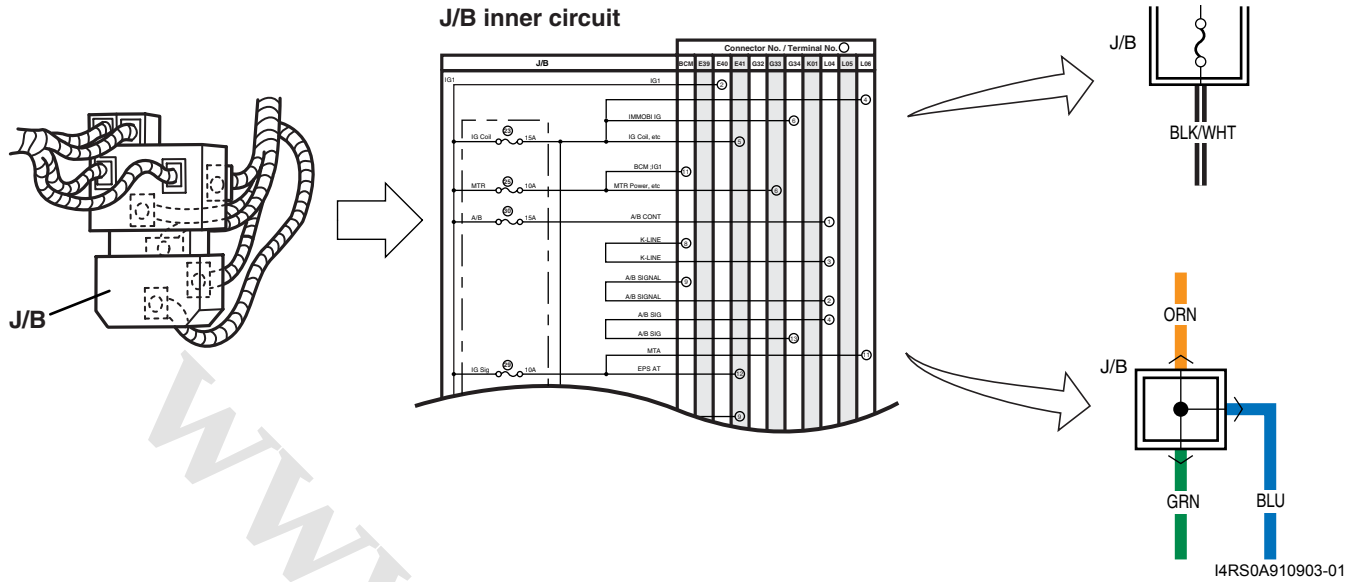


6) Connector location, shape and terminal No.
Refer to “Connector Layout Diagram: ”.
Refer to “System Circuit Diagram: ”.
Refer to “List of Connectors: ”.

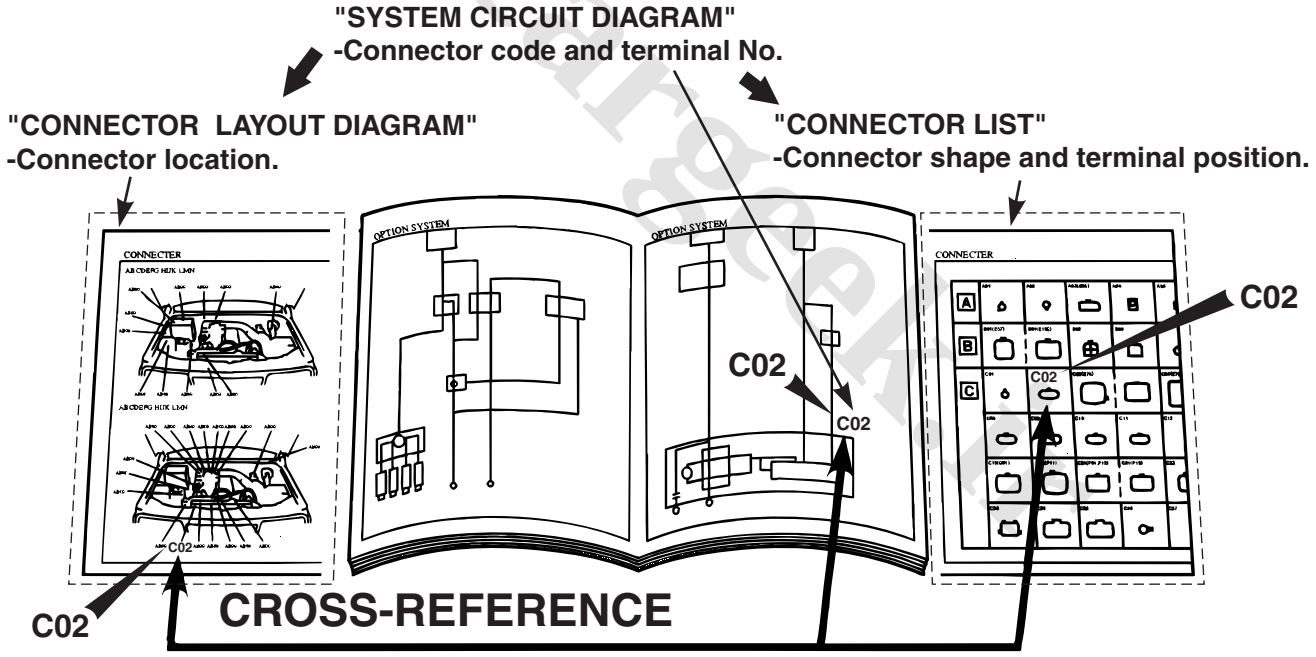


www.CarGeek.ir

www.CarGeek.ir

## How to Read Ground Point

S5JB0A9101007

Refer to “System Circuit Diagram: ”.
Refer to “Ground (earth) Point: ”.

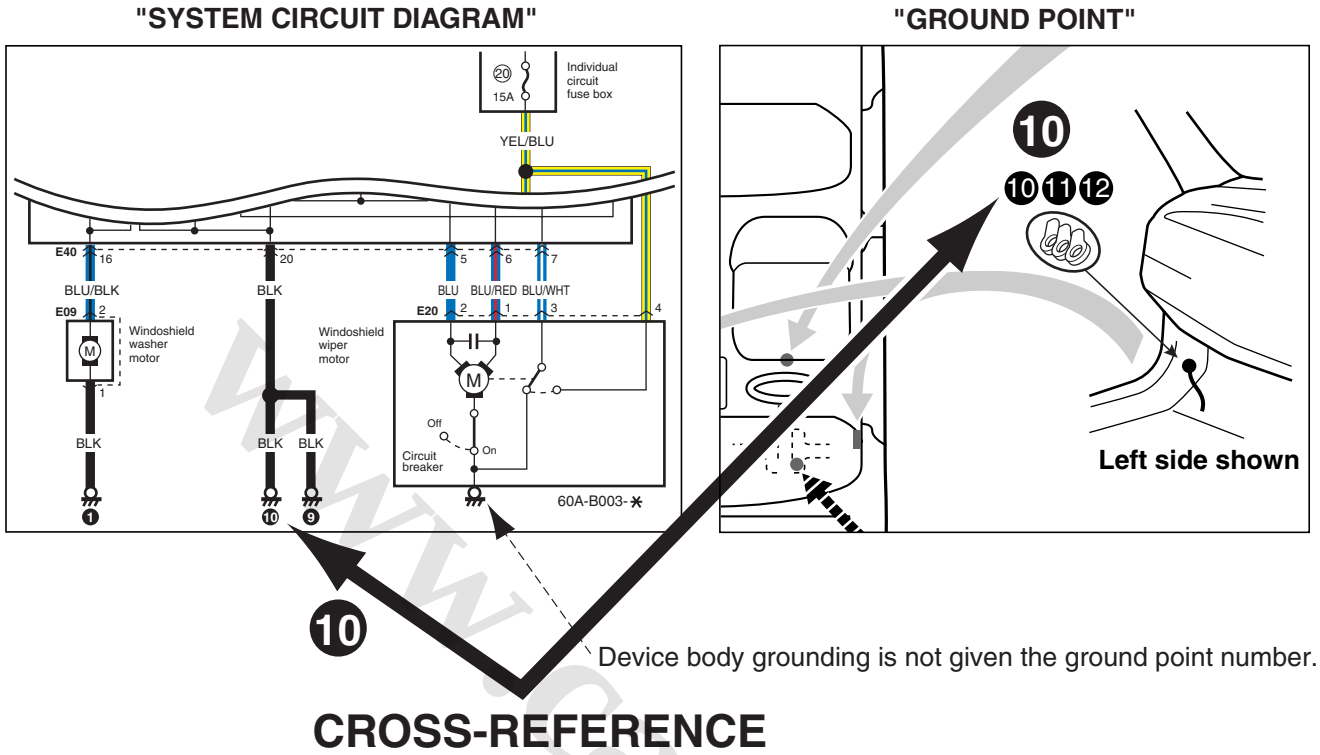


I4JA01910985-01

www.cargeek.ir

www.CarGeek.ir


## How to Read Power Supply Diagram

S5JB0A9101008

Refer to “Power Supply Diagram: ”.
Refer to “System Circuit Diagram: ”.

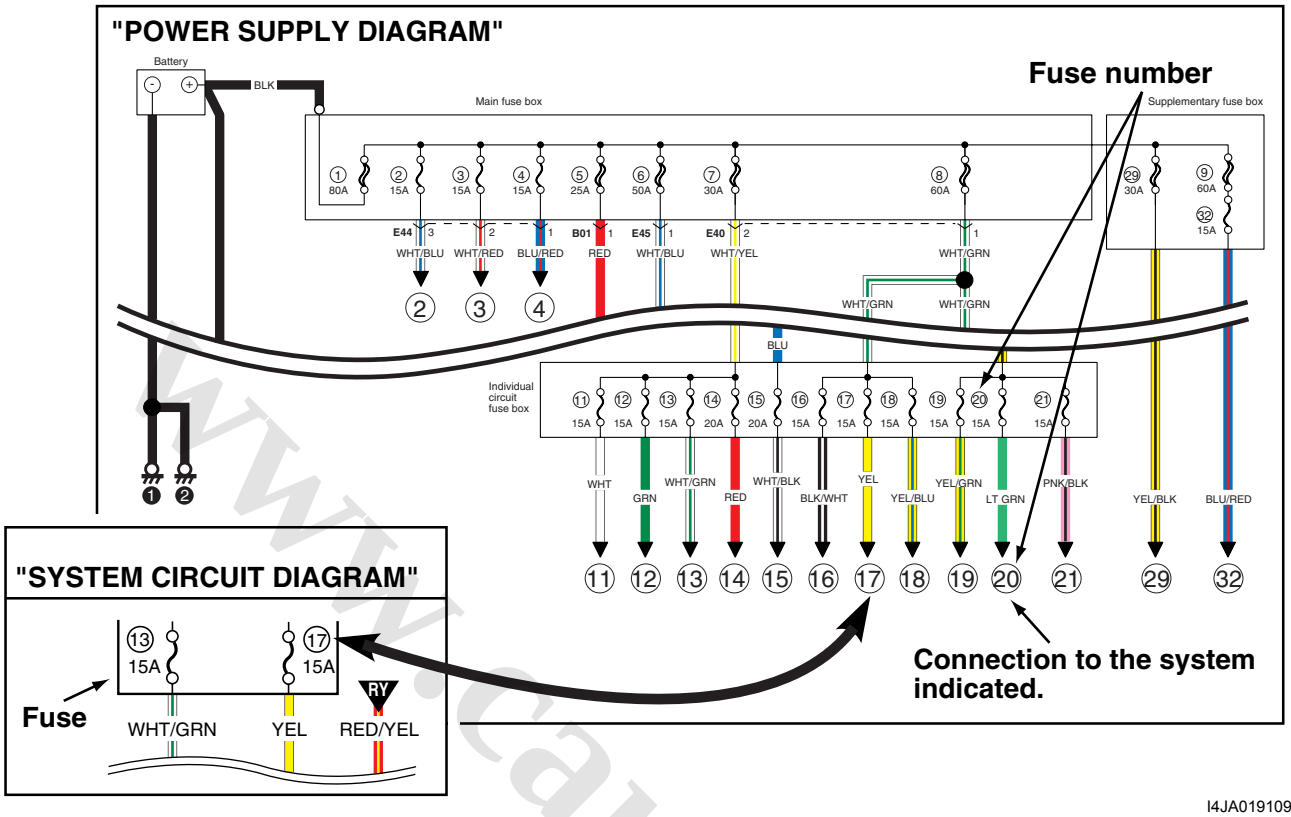


I4JA01910986-01

www.cargeek.ir

www.CarGeek.ir

## How to Read System Circuit Diagram

S5JB0A9101009

The circuit diagram is designed so the current flows from the top of the diagram (power source) to the bottom of the diagram (ground) as if giving an image of water flow.

**[A]: Fuse No.**

**[B]: Circuit jumping page / direction**

**NOTE**

**This means “Jump to the page directed with the arrow(s) by their number.**
**(For example:” Two arrows directing left” means” Jump to two pages before”.)**
**You will find the same symbol with the arrows directing opposite in the referenced page. The circuit continues between the symbols.**

**[C]: Circuit jumping point / direction**

**NOTE**

**The circuit continues to the same symbol with opposite direction within the page.**
**You will find the other symbol in the direction of the arrow.**

**[D]: Terminals-in-one-connector mark**

**[E]: Wire color**

**[F]: Shield wire**

**[G]: Ground point**

**[H]: “From” or “To” (With ID letter (s))**

**[I]: Specification variation**

The white arrow between A and B means “or”.

**[J]: “From” (With ID letter (s))**

**[K] “To” (With ID letter (s))**

**[L]: Connector code**

**[M]: Terminal No.**

**[N]: Symbol mark**

**[O]: “SEE” mark**

www.cargeek.ir

www.cargeek.ir

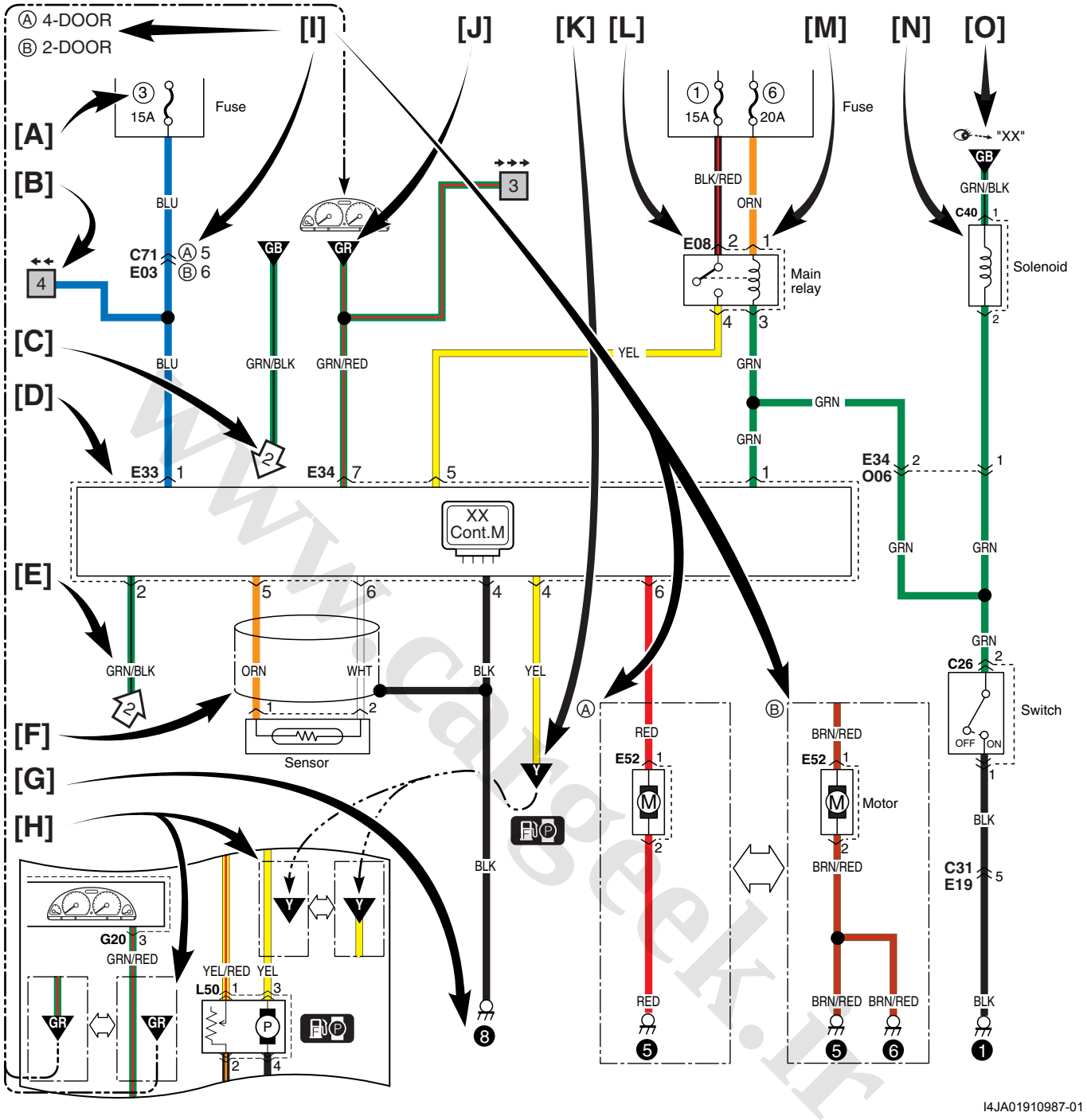
Ⓐ 4-DOOR
Ⓑ 2-DOOR
[I]
[J]
[K]
[L]
[M]
[N]
[O]
[A]
[B]
[C]
[D]
[E]
[F]
[G]
[H]
Fuse
15A
20A
BLU
BLK/RED
ORN
"XX"
GB
GRN/BLK
C40
Solenoid
C71
E03
E08
Main relay
GR
GRN/RED
YEL
GRN
E33
E34
E34
O06
XX Cont.M
ORN
WHT
BLK
Sensor
C26
Switch
OFF
ON
RED
E52
BRN/RED
Motor
C31
E19
G20
YEL/RED
L50
I4JA01910987-01

www.CarGeek.ir

# Harness Routing and Connector Layout Diagram

## Connector Layout Diagram

S5JB0A910A006

Refer to “Engine Compartment: ”.
Refer to “Instrument Panel: ”.
Refer to “Door, Roof: ”.
Refer to “Floor: ”.
Refer to “Rear: ”.

## Engine Compartment

S5JB0A910A001

### C: Engine harness (M16A RHD)

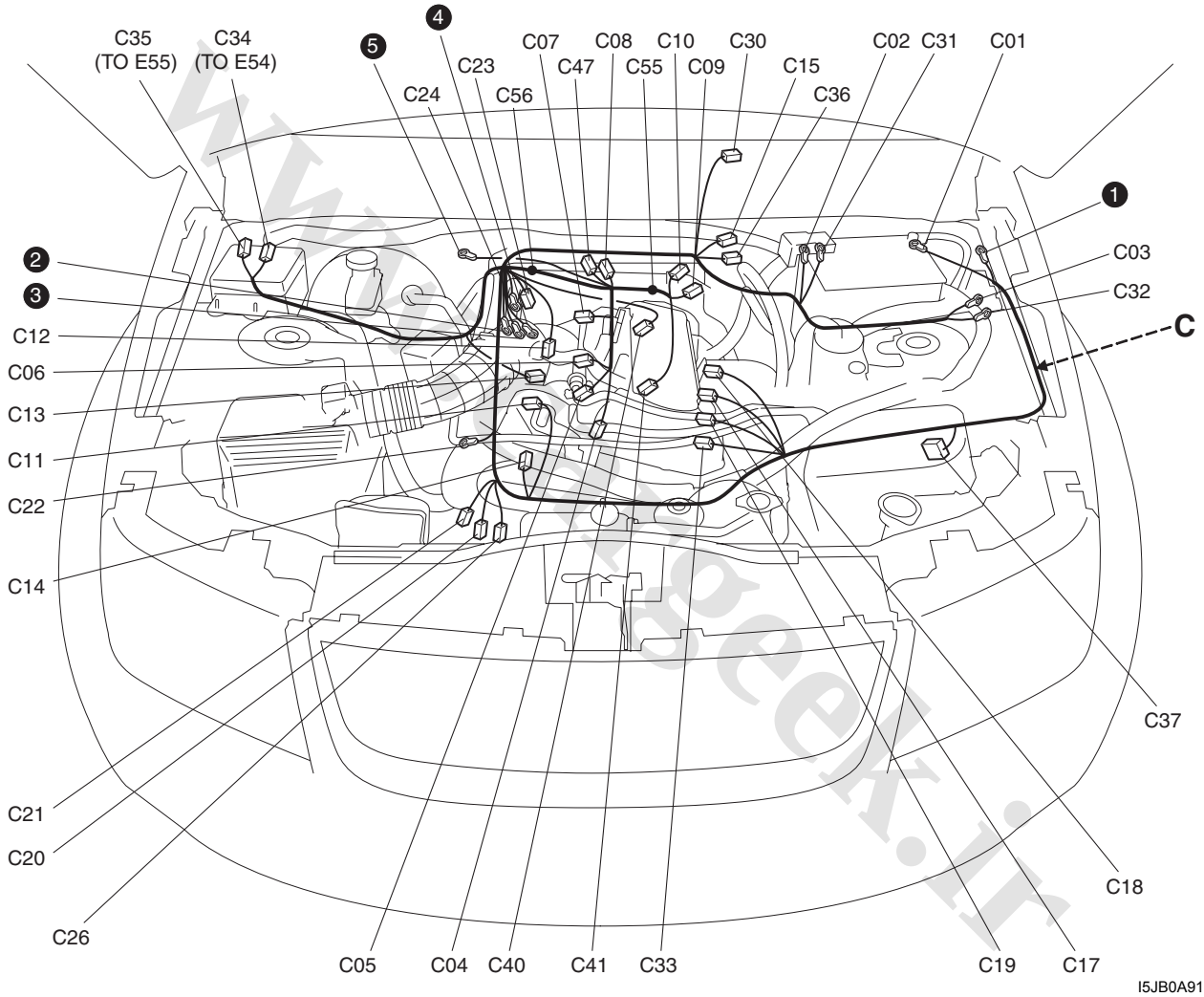


I5JB0A910901-04

### C: Engine harness

| No./Color | Connective position | No./Color | Connective position |
|---|---|---|---|
| C01/- | Battery (-) | C21/GRN | Generator #1 |
| C02/- | Battery fuse box | C22/- | Generator #2 |
| C03/- | Fuse box No.1 | C23/BLK | Starting motor #1 |
| C04/GRY | Injector #1 | C24/- | Starting motor #2 |
| C05/GRY | Injector #2 | C26/GRY | Knock sensor |
| C06/GRY | Injector #3 | C30/BLK (M/T) | Back-up light switch |
| C07/GRY | Injector #4 | C31/- | Battery fuse box |
| C08/BLK | CMP sensor | C32/- | Fuse box No.1 |
| C09/BLK | ECT sensor | C33/N | P/S pump pressure switch |
| C10/GRY | EGR stepper motor | C34/N | Main harness (To E54) |

www.cargeek.ir

| No./Color | Connective position | No./Color | Connective position |
|---|---|---|---|
| C11/BLK | Throttle position sensor | C35/BLU | Main harness (To E55) |
| C12/BLK | MAP sensor | C36/GRY | A/F sensor |
| C13/BLK | MAF sensor | C37/GRY | ECM |
| C14/BLK | EVAP canister purge valve | C40/GRY | IG coil #1 & #4 |
| C15/N | Rear heated oxygen sensor | C41/GRY | IG coil #2 & #3 |
| C17/BLK | A/C compressor | C47/BLK | Noise filter |
| C18/N | Oil pressure sensor | C55/- | Weld splice |
| C19/BLU | VVT solenoid | C56/- | Weld splice |
| C20/N | CKP sensor | | |

**C: Engine harness (M16A LHD)**

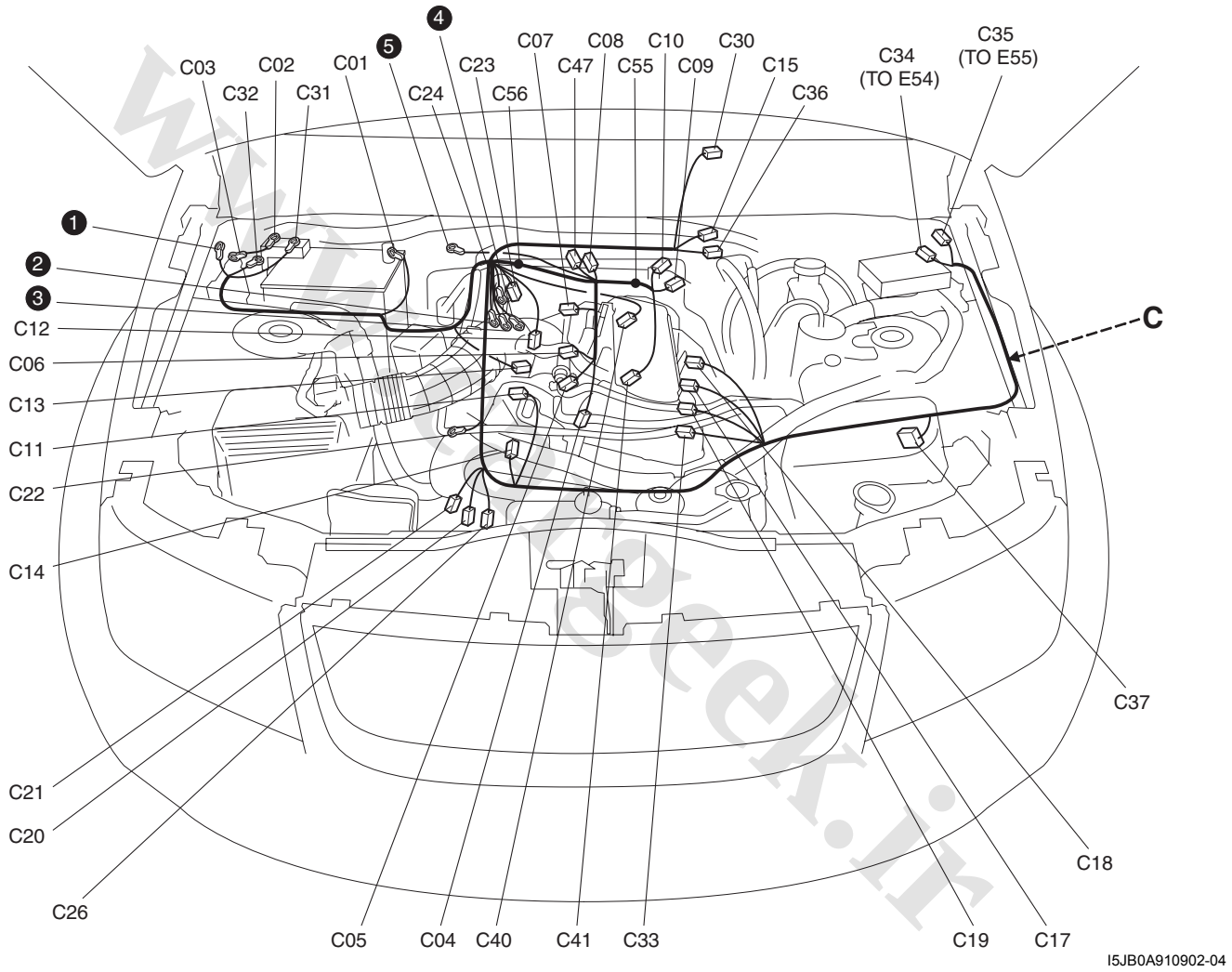


**C: Engine harness**

| No./Color | Connective position | No./Color | Connective position |
|---|---|---|---|
| C01/- | Battery (-) | C21/GRN | Generator #1 |
| C02/- | Battery fuse box | C22/- | Generator #2 |
| C03/- | Fuse box No.1 | C23/BLK | Starting motor #1 |
| C04/GRY | Injector #1 | C24/- | Starting motor #2 |
| C05/GRY | Injector #2 | C26/GRY | Knock sensor |
| C06/GRY | Injector #3 | C30/BLK (M/T) | Back-up light switch |
| C07/GRY | Injector #4 | C31/- | Battery fuse box |
| C08/BLK | CMP sensor | C32/- | Fuse box No.1 |
| C09/BLK | ECT sensor | C33/N | P/S pump pressure switch |
| C10/GRY | EGR stepper motor | C34/N | Main harness (To E54) |
| C11/BLK | Throttle position sensor | C35/BLU | Main harness (To E55) |

www.CarGeek.ir

| No./Color | Connective position | No./Color | Connective position |
|---|---|---|---|
| C12/BLK | MAP sensor | C36/GRY | A/F sensor |
| C13/BLK | MAF sensor | C37/GRY | ECM |
| C14/BLK | EVAP canister purge valve | C40/GRY | IG coil #1 & #4 |
| C15/N | Rear heated oxygen sensor | C41/GRY | IG coil #2 & #3 |
| C17/BLK | A/C compressor | C47/BLK | Noise filter |
| C18/N | Oil pressure sensor | C55/- | Weld splice |
| C19/BLU | VVT solenoid | C56/- | Weld splice |
| C20/N | CKP sensor | | |

**C: Engine harness (J20A RHD)**

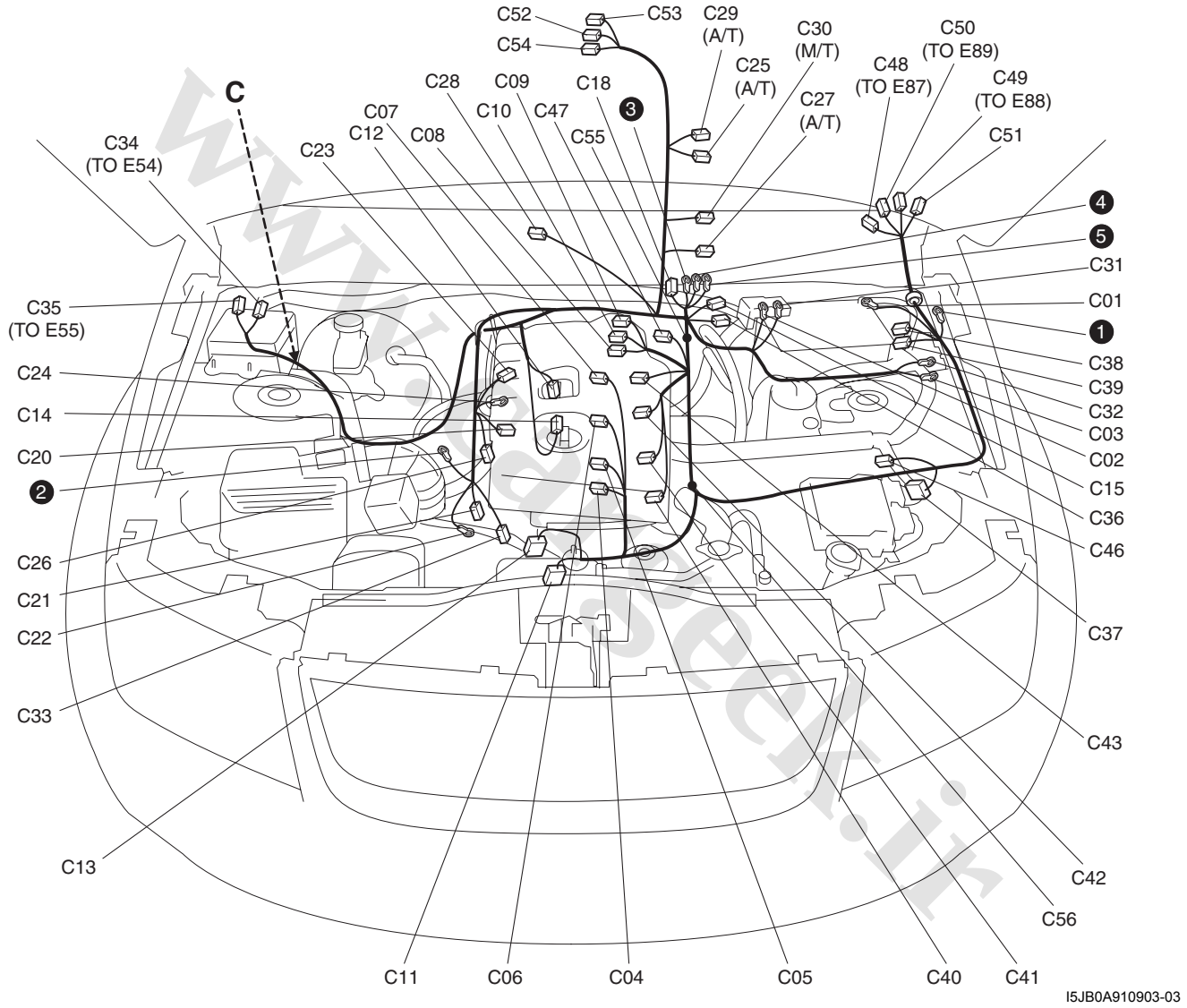


www.cargeek.ir

**C: Engine harness**

| No./Color | Connective position | No./Color | Connective position |
|---|---|---|---|
| C01/- | Battery (-) | C30/BLK (M/T) | Back-up light switch |
| C02/- | Battery fuse box | C31/- | Battery fuse box |
| C03/- | Fuse box No.1 | C32/- | Fuse box No.1 |
| C04/GRY | Injector #1 | C33/N | P/S pump pressure switch |
| C05/GRY | Injector #2 | C34/N | Main harness (To E54) |
| C06/GRY | Injector #3 | C35/BLU | Main harness (To E55) |
| C07/GRY | Injector #4 | C36/GRY | A/F sensor |
| C08/GRY | CMP sensor | C37/GRY | ECM |
| C09/BLK | ECT sensor | C38/BLK | Current sensor |
| C10/GRY | EGR stepper motor | C39/GRY | Fuse box No.1 |
| C11/BLK | Throttle position sensor | C40/GRY | IG coil #1 |
| C12/BLK | MAP sensor | C41/GRY | IG coil #2 |
| C13/BLK | MAF sensor | C42/GRY | IG coil #3 |
| C14/BLK | EVAP canister purge valve | C43/GRY | IG coil #4 |
| C15/N | Rear heated oxygen sensor | C46/BRN | Intake control valve |
| C18/N | Oil pressure sensor | C47/BLK | Noise filter |
| C20/GRY | CKP sensor | C48/N | Main harness (To E87) |
| C21/GRN | Generator #1 | C49/N | Main harness (To E88) |
| C22/- | Generator #2 | C50/N | Main harness (To E89) |
| C23/BLK | Starting motor #1 | C51/BLU | J/C |
| C24/- | Starting motor #2 | C52/BLK | T/F 4L switch |
| C25/BLU (A/T) | Output shaft speed sensor | C53/N | T/F position switch |
| C26/GRY | Knock sensor | C54/GRY | T/F actuator |
| C27/BLU (A/T) | Input shaft speed sensor | C55/- | Weld splice |
| C28/GRY (A/T) | Transmission range sensor | C56/- | Weld splice |
| C29/GRY (A/T) | Shift solenoid | | |

www.cargeek.ir

www.CarGeek.ir

## C: Engine harness (J20A LHD)

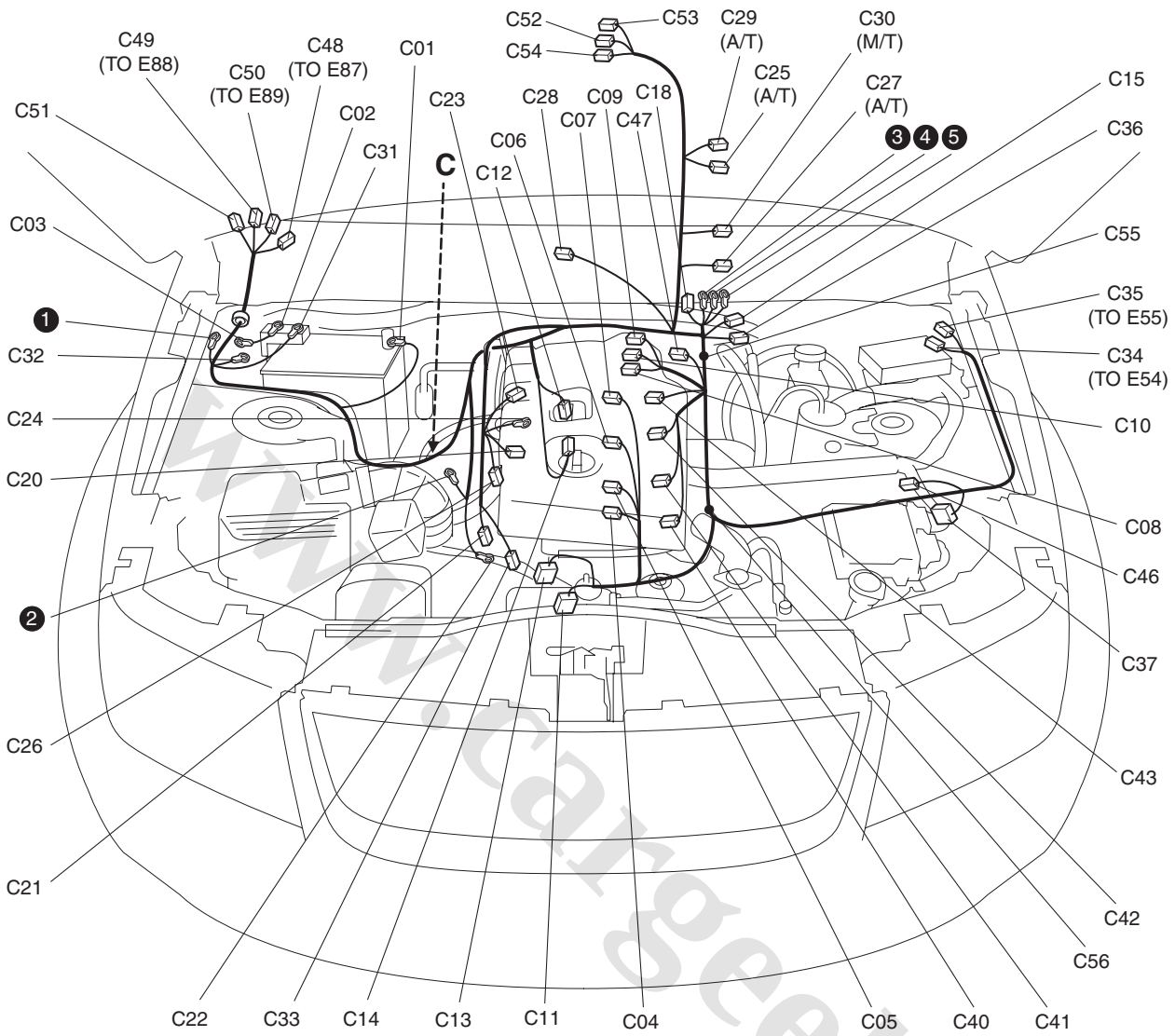


## C: Engine harness

| No./Color | Connective position | No./Color | Connective position |
|---|---|---|---|
| C01/- | Battery (-) | C30/BLK (M/T) | Back-up light switch |
| C02/- | Battery fuse box | C31/- | Battery fuse box |
| C03/- | Fuse box No.1 | C32/- | Fuse box No.1 |
| C04/GRY | Injector #1 | C33/N | P/S pump pressure switch |
| C05/GRY | Injector #2 | C34/N | Main harness (To E54) |
| C06/GRY | Injector #3 | C35/BLU | Main harness (To E55) |
| C07/GRY | Injector #4 | C36/GRY | A/F sensor |
| C08/GRY | CMP sensor | C37/GRY | ECM |
| C09/BLK | ECT sensor | C38/BLK | Current sensor |
| C10/GRY | EGR stepper motor | C39/GRY | Fuse box No.1 |
| C11/BLK | Throttle position sensor | C40/GRY | IG coil #1 |
| C12/BLK | MAP sensor | C41/GRY | IG coil #2 |
| C13/BLK | MAF sensor | C42/GRY | IG coil #3 |
| C14/BLK | EVAP canister purge valve | C43/GRY | IG coil #4 |
| C15/N | Rear heated oxygen sensor | C46/BRN | Intake control valve |
| C18/N | Oil pressure sensor | C47/BLK | Noise filter |
| C20/GRY | CKP sensor | C48/N | Main harness (To E87) |
| C21/GRN | Generator #1 | C49/N | Main harness (To E88) |
| C22/- | Generator #2 | C50/N | Main harness (To E89) |

www.cargeek.ir

| No./Color | Connective position | No./Color | Connective position |
|---|---|---|---|
| C23/BLK | Starting motor #1 | C51/BLU | J/C |
| C24/- | Starting motor #2 | C52/BLK | T/F 4L switch |
| C25/BLU (A/T) | Output shaft speed sensor | C53/N | T/F position switch |
| C26/GRY | Knock sensor | C54/GRY | T/F actuator |
| C27/BLU (A/T) | Input shaft speed sensor | C55/- | Weld splice |
| C28/GRY (A/T) | Transmission range sensor | C56/- | Weld splice |
| C29/GRY (A/T) | Shift solenoid | | |

**B: A/C compressor wire / E: Main harness, Front height sensor wire (RHD)**

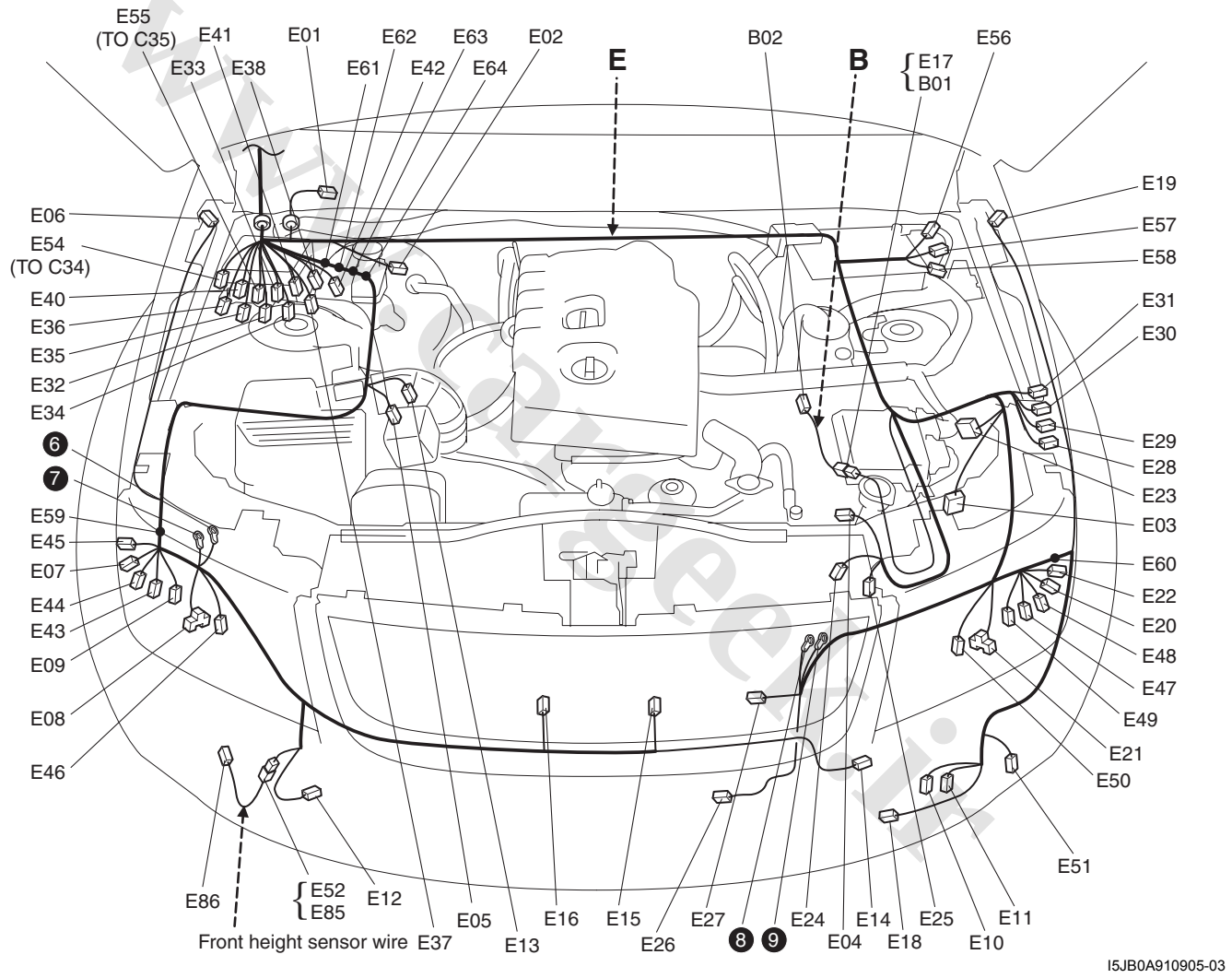


**B: A/C compressor wire**

| No./Color | Connective position | No./Color | Connective position |
|---|---|---|---|
| B01/BLK | Main Harness (To E17) | B02/BLK | A/C compressor |

www.CarGeek.ir

**E: Main harness**

| No./Color | Connective position | No./Color | Connective position |
|---|---|---|---|
| E01/GRY | Windshield wiper motor | E32/BLK | Fuse box No.2 (Starting motor relay & Headlight HI relay & Headlight LO relay) |
| E02/GRY | Brake fluid level switch | E33/BLK | Fuse box No.2 (Heater motor relay & Main relay & Fuel pump relay) |
| E03/BLK | ABS control module | E34/BLK (M16A) | Fuse box No.2 (A/C compressor relay & Heated oxygen relay) |
| E04/BLK | A/C pressure sensor | E35/N | Power integration No.1 (Mirror heater relay & Fog lamp relay) |
| E05/N | Wheel speed sensor (FR) | E36/N | Power integration No.1 (Horn relay & Rear defogger relay) |
| E06/N | Side turn signal light (R) | E37/N (J20A) | Power integration No.2 (A/C compressor relay & Heated oxygen relay) |
| E07/N | Front position light (R) | E38/N (J20A) | Power integration No.2 (A/T relay) |
| E08/BLK (3 dr) | Headlight (R) | E40/GRY | Power integration No.1 |
| E09/GRY | Front turn signal light (R) | E41/N (J20A) | Power integration No.2 |
| E10/N | Windshield washer motor | E42/N | Fuse box No.2 |
| E11/N | Rear washer motor | E43/GRY (5 dr) | HID headlight (R) |
| E12/BLK | Front fog light (R) | E44/BLK (5 dr) | Headlight LO (R) |
| E13/YEL | Forward sensor (Driver side) | E45/GRY | Headlight beam leveling actuator (R) |
| E14/BLK | Ambient temperature sensor | E46/BLK (5 dr) | Headlight HI (R) |
| E15/BLK | Horn (HI) | E47/GRY (5 dr) | HID headlight (L) |
| E16/BLK | Horn (LO) | E48/BLK (5 dr) | Headlight LO (L) |
| E17/BLK | A/C compressor wire (To B01) | E49/GRY | Headlight beam leveling actuator (L) |
| E18/BLK | Front fog light (L) | E50/BLK (5 dr) | Headlight HI (L) |
| E19/N | Side turn signal light (L) | E51/N | HLC motor |
| E20/GRY | Front turn signal light (L) | E52/BLK | Front height sensor wire (To E85) |
| E21/BLK (3 dr) | Headlight (L) | E54/N | Engine harness (To C34) |
| E22/N | Front position light (L) | E55/BLU | Engine harness (To C35) |
| E23/GRY | ECM | E56/BLK | Fuse box No.1 |
| E24/YEL | Forward sensor (Passenger side) | E57/BLK | Fuse box No.1 |
| E25/GRY | Wheel speed sensor (FL) | E58/GRY | Fuse box No.1 |
| E26/BLK | Radiator fan motor #1 | E59/- | Weld splice |
| E27/GRY | Radiator fan motor #2 | E60/- | Weld splice |
| E28/BLK | Relay box (Throttle motor relay) | E61/- | Weld splice |
| E29/BLK | Relay box (Radiator fan relay #1) | E62/- | Weld splice |
| E30/BLK | Relay box (Radiator fan relay #2) | E63/- | Weld splice |
| E31/BLK | Relay box (Radiator fan relay #3) | E64/- | Weld splice |

**E: Front height sensor wire**

| No./Color | Connective position | No./Color | Connective position |
|---|---|---|---|
| E85/BLK | Main Harness (To E52) | E86/BLK | Front height sensor |

www.cargeek.ir

www.CarGeek.ir


**B: A/C compressor wire / E: Main harness, Front height sensor wire (LHD)**

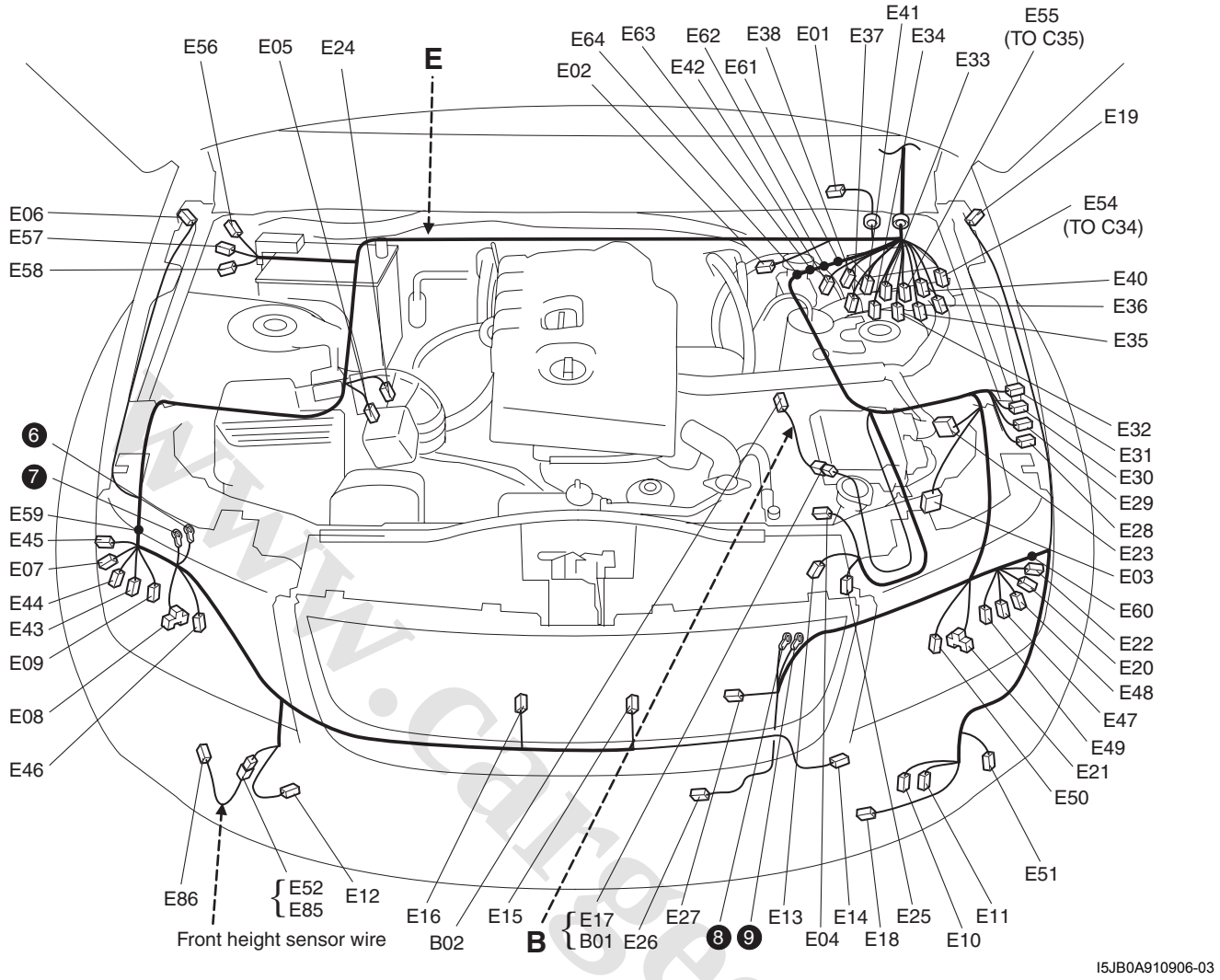


I5JB0A910906-03

**B: A/C compressor wire**

| No./Color | Connective position | No./Color | Connective position |
|---|---|---|---|
| B01/BLK | Main Harness (To E17) | B02/BLK | A/C compressor |

**E: Main harness**

| No./Color | Connective position | No./Color | Connective position |
|---|---|---|---|
| E01/GRY | Windshield wiper motor | E32/BLK | Fuse box No.2 (Starting motor relay & Headlight HI relay & Headlight LO relay) |
| E02/GRY | Brake fluid level switch | E33/BLK | Fuse box No.2 (Heater motor relay & Main relay & Fuel pump relay) |
| E03/BLK | ABS control module | E34/BLK (M16A) | Fuse box No.2 (A/C compressor relay & Heated oxygen relay) |
| E04/BLK | A/C pressure sensor | E35/N | Power integration No.1 (Mirror heater relay & Fog lamp relay) |
| E05/N | Wheel speed sensor (FR) | E36/N | Power integration No.1 (Horn relay & Rear defogger relay) |
| E06/N | Side turn signal light (R) | E37/N (J20A) | Power integration No.2 (A/C compressor relay & Heated oxygen relay) |
| E07/N | Front position light (R) | E38/N (J20A) | Power integration No.2 (A/T relay) |
| E08/BLK (3 dr) | Headlight (R) | E40/GRY | Power integration No.1 |
| E09/GRY | Front turn signal light (R) | E41/N (J20A) | Power integration No.2 |

www.cargeek.ir

www.CarGeek.ir

| No./Color | Connective position | No./Color | Connective position |
|---|---|---|---|
| E10/N | Windshield washer motor | E42/N | Fuse box No.2 |
| E11/N | Rear washer motor | E43/GRY (5 dr) | HID headlight (R) |
| E12/BLK | Front fog light (R) | E44/BLK (5 dr) | Headlight LO (R) |
| E13/YEL | Forward sensor (Driver side) | E45/GRY | Headlight beam leveling actuator (R) |
| E14/BLK | Ambient temperature sensor | E46/BLK (5 dr) | Headlight HI (R) |
| E15/BLK | Horn (HI) | E47/GRY (5 dr) | HID headlight (L) |
| E16/BLK | Horn (LO) | E48/BLK (5 dr) | Headlight LO (L) |
| E17/BLK | A/C compressor wire (To B01) | E49/GRY | Headlight beam leveling actuator (L) |
| E18/BLK | Front fog light (L) | E50/BLK (5 dr) | Headlight HI (L) |
| E19/N | Side turn signal light (L) | E51/N | HLC motor |
| E20/GRY | Front turn signal light (L) | E52/BLK | Front height sensor wire (To E85) |
| E21/BLK (3 dr) | Headlight (L) | E54/BLU | Engine harness (To C34) |
| E22/N | Front position light (L) | E55/N | Engine harness (To C35) |
| E23/GRY | ECM | E56/BLK | Fuse box No.1 |
| E24/YEL | Forward sensor (Passenger side) | E57/BLK | Fuse box No.1 |
| E25/GRY | Wheel speed sensor (FL) | E58/GRY | Fuse box No.1 |
| E26/BLK | Radiator fan motor #1 | E59/- | Weld splice |
| E27/GRY | Radiator fan motor #2 | E60/- | Weld splice |
| E28/BLK | Relay box (Throttle motor relay) | E61/- | Weld splice |
| E29/BLK | Relay box (Radiator fan relay #1) | E62/- | Weld splice |
| E30/BLK | Relay box (Radiator fan relay #2) | E63/- | Weld splice |
| E31/BLK | Relay box (Radiator fan relay #3) | E64/- | Weld splice |

**E: Front height sensor wire**

| No./Color | Connective position | No./Color | Connective position |
|---|---|---|---|
| E85/BLK | Main Harness (To E52) | E86/BLK | Front height sensor |

www.cargeek.ir

www.CarGeek.ir


## Instrument Panel

S5JB0A910A002

### E: Main harness, Controller wire (RHD)

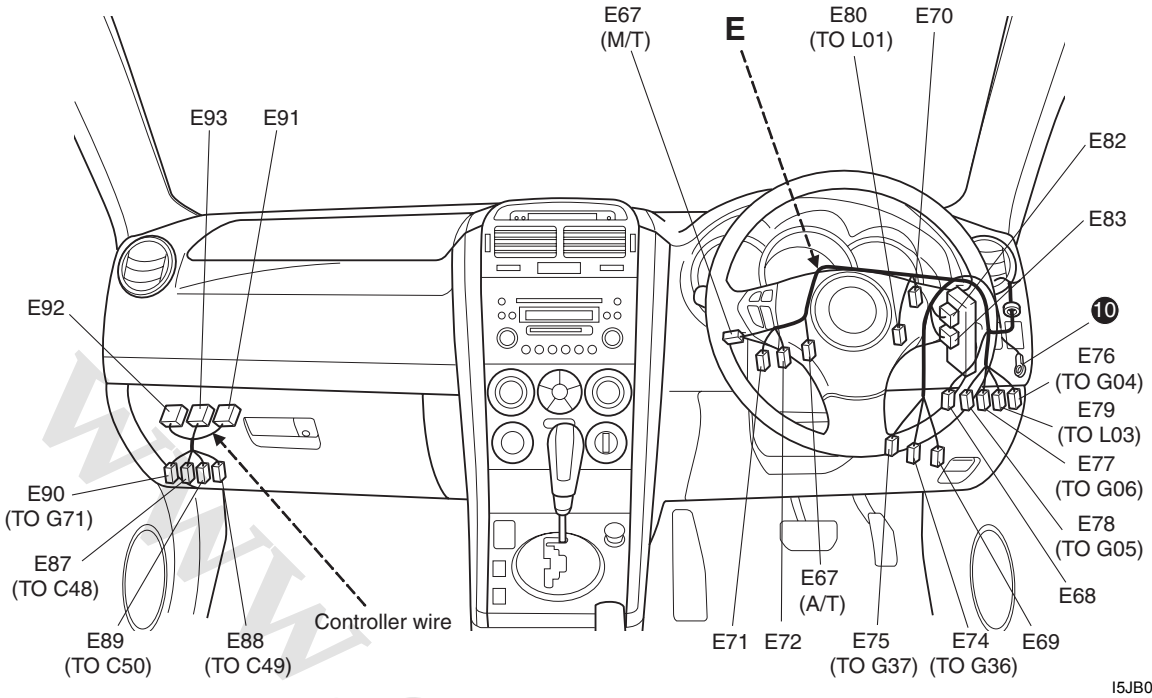


I5JB0A910907-03

### E: Main harness

| No./Color | Connective position | No./Color | Connective position |
|---|---|---|---|
| E67/N | Brake lamp switch | E76/N | Instrument panel harness (To G04) |
| E68/BLK | Acceleration pedal sensor | E77/YEL | Instrument panel harness (To G06) |
| E69/N (IF EQPD) | Diagnosis connector #1 | E78/GRY | Instrument panel harness (To G05) |
| E70/BLK | Diode #1 | E79/YEL | Floor harness (To L03) |
| E71/N | Clutch switch | E80/N | Floor harness (To L01) |
| E72/N | Clutch 4WD switch | E82/N | J/B |
| E74/N | Instrument panel harness (To G36) | E83/N | J/B |
| E75/N | Instrument panel harness (To G37) | | |

### E: Controller wire

| No./Color | Connective position | No./Color | Connective position |
|---|---|---|---|
| E87/N | Engine harness (To C48) | E91/N | 4WD control module |
| E88/N | Engine harness (To C49) | E92/N | TCM |
| E89/N | Engine harness (To C50) | E93/N | TCM |
| E90/BLU | Instrument panel harness (To G71) | | |

www.cargeek.ir

www.CarGeek.ir

### E: Main harness, Controller wire (LHD)

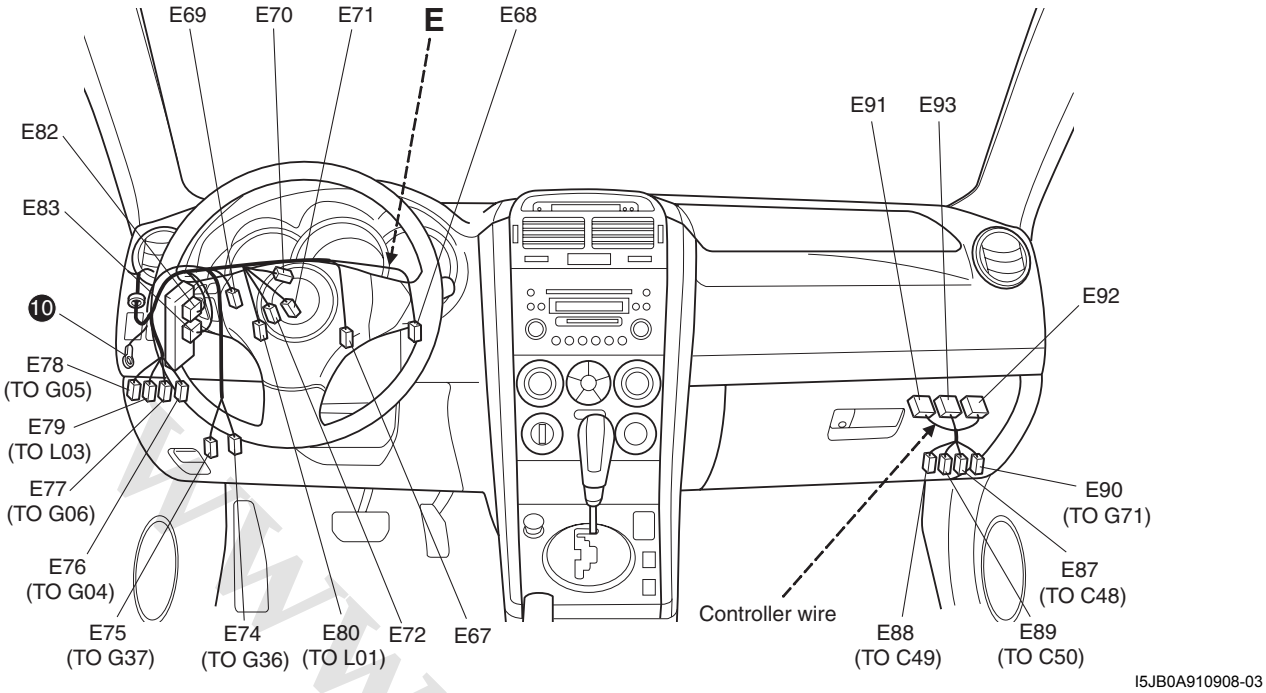


### E: Main harness

| No./Color | Connective position | No./Color | Connective position |
|---|---|---|---|
| E67/N | Brake lamp switch | E76/N | Instrument panel harness (To G04) |
| E68/BLK | Acceleration pedal sensor | E77/N | Instrument panel harness (To G06) |
| E69/N | Diagnosis connector #1 | E78/GRY | Instrument panel harness (To G05) |
| E70/BLK | Diode #1 | E79/YEL | Floor harness (To L03) |
| E71/N | Clutch switch | E80/N | Floor harness (To L01) |
| E72/N | Clutch 4WD switch | E82/N | J/B |
| E74/N | Instrument panel harness (To G36) | E83/N | J/B |
| E75/N | Instrument panel harness (To G37) | | |

### E: Controller wire

| No./Color | Connective position | No./Color | Connective position |
|---|---|---|---|
| E87/N | Engine harness (To C48) | E91/N | 4WD control module |
| E88/N | Engine harness (To C49) | E92/N | TCM |
| E89/N | Engine harness (To C50) | E93/N | TCM |
| E90/BLU | Instrument panel harness (To G71) | | |

www.cargeek.ir

**B: A/C wire / F: Console wire / G: Instrument panel harness / Q: A/B wire (RHD)**

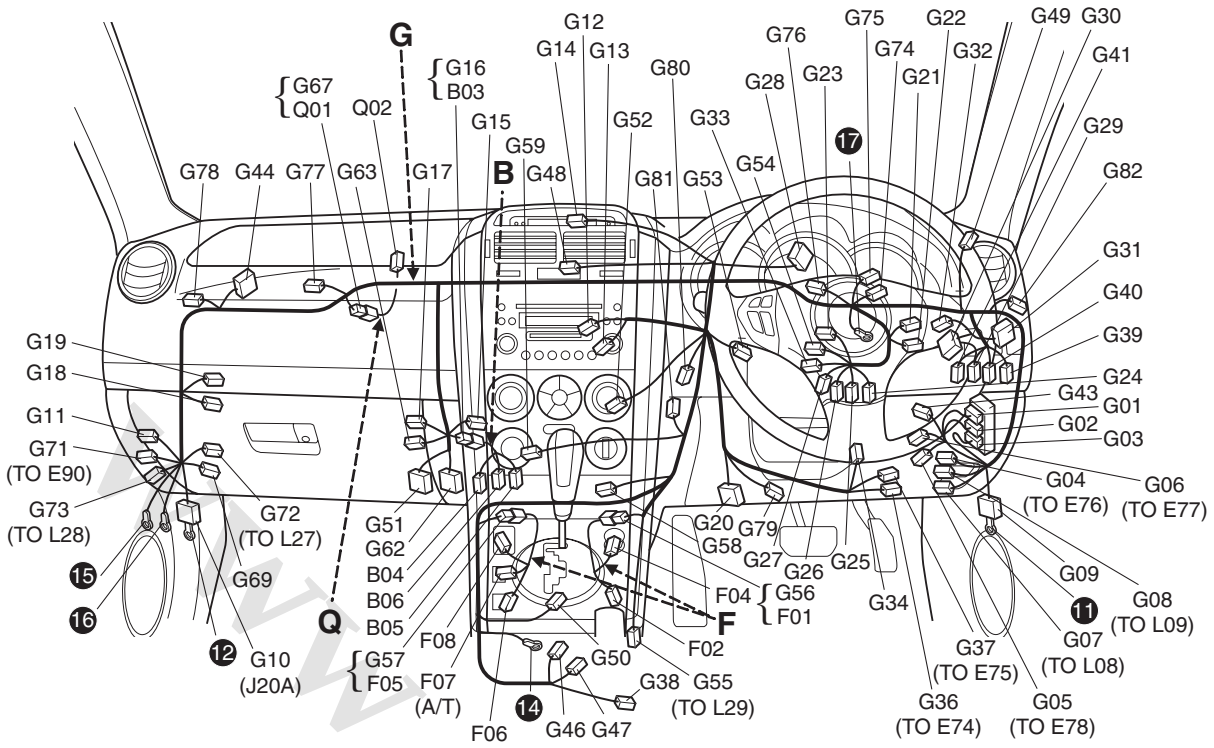


**B: A/C wire**

| No./Color | Connective position | No./Color | Connective position |
|---|---|---|---|
| B03/N | Instrument panel harness (To G16) | B05/YEL | Fresh/Recircle actuator |
| B04/YEL | Temperature control actuator | B06/YEL | Mode selecting actuator |

**F: Console wire**

| No./Color | Connective position | No./Color | Connective position |
|---|---|---|---|
| F01/N | Instrument panel harness (To G56) | F06/GRN | Seat heater switch (Passenger side) |
| F02/GRN | Seat heater switch (Driver side) | F07/N (A/T) | A/T mode select switch |
| F04/N | Cigar lighter (ACC socket #3) | F08/N | ACC socket #2 |
| F05/N | Instrument panel harness (To G57) | | |

**G: Instrument panel harness**

| No./Color | Connective position | No./Color | Connective position |
|---|---|---|---|
| G01/N | J/B | G38/N | Parking brake switch |
| G02/N | J/B | G39/ORN | HLC switch |
| G03/N | J/B | G40/N | Headlight beam leveling switch |
| G04/N | Main harness (To E76) | G41/GRY | ILL cancel switch |
| G05/GRY | Main harness (To E78) | G43/BLK | Diagnosis connector #4 |
| G06/YEL | Main harness (To E77) | G44/N | Smart ECM |
| G07/N | Floor harness (To L08) | G46/YEL (With side A/B, curtain A/B system) | A/B SDM |
| G08/BLU | Floor harness (To L09) | G47/YEL (Without side A/B, curtain A/B system) | A/B SDM |
| G09/N | J/C | G48/ORN | Hazard switch |
| G10/N (J20A) | J/C | G49/N | Sunlight sensor |
| G11/N | Audio antenna | G50/N | A/T shift lever |
| G12/BLU | Audio | G51/N | Auto leveling control module |
| G13/N | Navigation | G52/GRY | Auto A/C |

www.CarGeek.ir

| No./Color | Connective position | No./Color | Connective position |
|---|---|---|---|
| G14/YEL | Multi information display | G53/N | Room temperature sensor |
| G15/N | EVAP thermistor | G54/BLK | Steering switch |
| G16/N | A/C wire (To B03) | G55/YEL | Floor harness (To L29) |
| G17/N | Fan driver | G56/N | Console wire (To F01) |
| G18/N | Blower fan motor | G57/N | Console wire (To F05) |
| G19/BLK | Diode #2 | G58/N | Ashtray ILL |
| G20/BLK | Data link connector | G59/GRN | 4WD switch |
| G21/N | IG switch | G62/N | HLC control module |
| G22/N | Main switch (Key switch) | G63/N | Security option |
| G23/BLK | COMB switch | G67/YEL | Instrument panel harness (To Q01) |
| G24/BLK | ICM | G69/N | CO adjusting resistor |
| G25/N | COMB switch | G71/BLU | Controller wire (To E90) |
| G26/YEL | Driver inflator | G72/N | Floor harness (To L27) |
| G27/YEL | Driver inflator | G73/N | Floor harness (To L28) |
| G28/GRN | COMB meter | G74/BLU | J/C |
| G29/GRN | Front fog switch | G75/BLU | J/C |
| G30/N | BCM | G76/N | J/C |
| G31/N | BCM | G77/N | J/C |
| G32/N | BCM | G78/N | J/C |
| G33/N | Steering switch | G79/BLU | J/C |
| G34/N | Diagnosis connector #2 | G80/BLK | J/C |
| G36/N | Main harness (To E74) | G81/BLK | J/C |
| G37/N | Main harness (To E75) | G82/BLU | J/C |

**Q: A/B wire**

| No./Color | Connective position | No./Color | Connective position |
|---|---|---|---|
| Q01/YEL | Instrument panel harness (To G67) | Q02/BLK | Passenger inflator |

**B: A/C wire / F: Console wire / G: Instrument panel harness / Q: A/B wire (LHD)**

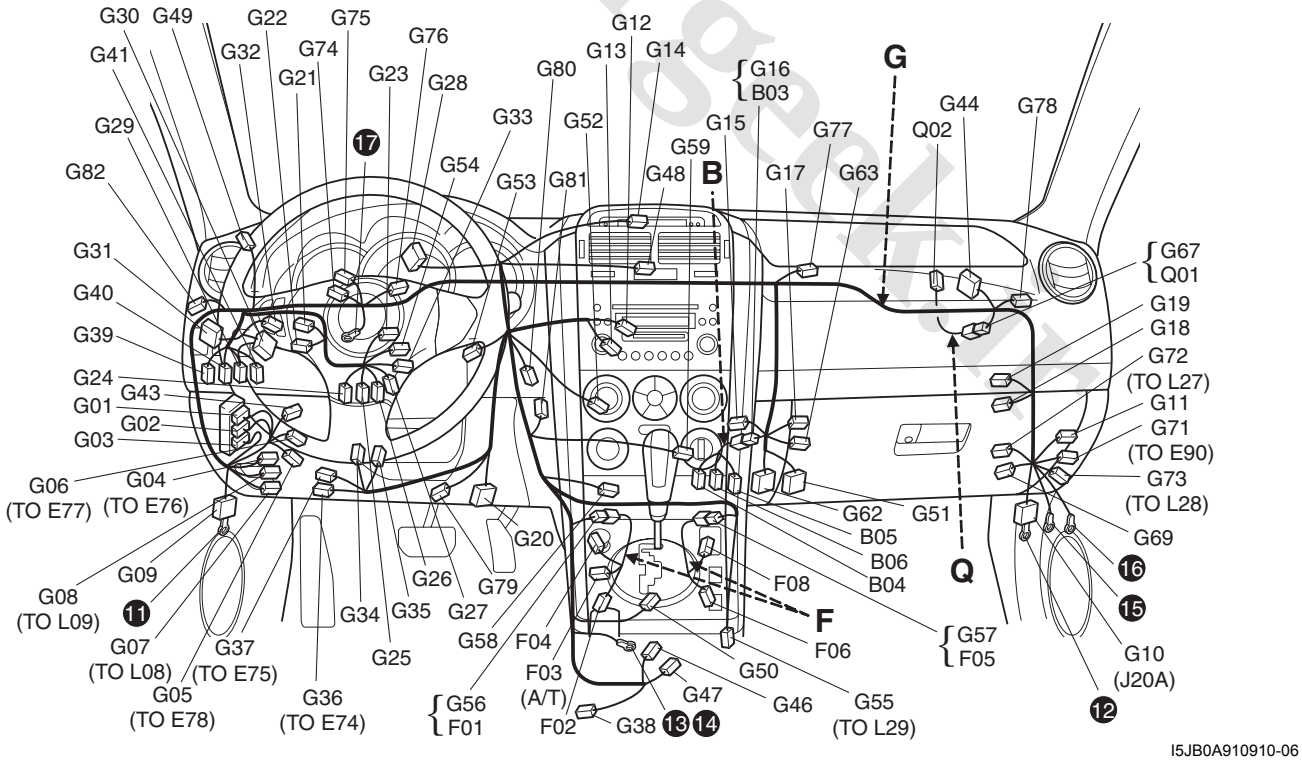


**B: A/C wire**

| No./Color | Connective position | No./Color | Connective position |
|---|---|---|---|
| B03/N | Instrument panel harness (To G16) | B05/YEL | Fresh/Recircle actuator |
| B04/YEL | Temperature control actuator | B06/YEL | Mode selecting actuator |

www.cargeek.ir

**F: Console wire**

| No./Color | Connective position | No./Color | Connective position |
|---|---|---|---|
| F01/N | Instrument panel harness (To G56) | F05/N | Instrument panel harness (To G57) |
| F02/GRN | Seat heater switch (Driver side) | F06/GRN | Seat heater switch (Passenger side) |
| F03/N (A/T) | A/T mode select switch | F08/N | ACC socket #2 |
| F04/N | Cigar lighter (ACC socket #3) | | |

**G: Instrument panel harness**

| No./Color | Connective position | No./Color | Connective position |
|---|---|---|---|
| G01/N | J/B | G38/N | Parking brake switch |
| G02/N | J/B | G39/ORN | HLC switch |
| G03/N | J/B | G40/N | Headlight beam leveling switch |
| G04/N | Main harness (To E76) | G41/GRY | ILL cancel switch |
| G05/GRY | Main harness (To E78) | G43/BLK | Diagnosis connector #4 |
| G06/YEL | Main harness (To E77) | G44/N | Smart ECM |
| G07/N | Floor harness (To L08) | G46/YEL (With side A/B, curtain A/B system) | A/B SDM |
| G08/BLU | Floor harness (To L09) | G47/YEL (Without side A/B, curtain A/B system) | A/B SDM |
| G09/N | J/C | G48/ORN | Hazard switch |
| G10/N (J20A) | J/C | G49/N | Sunlight sensor |
| G11/N | Audio antenna | G50/N | A/T shift lever |
| G12/BLU | Audio | G51/N | Auto leveling control module |
| G13/N | Navigation | G52/GRY | Auto A/C |
| G14/YEL | Multi information display | G53/N | Room temperature sensor |
| G15/N | EVAP thermistor | G54/BLK | Steering switch |
| G16/N | A/C wire (To B03) | G55/YEL | Floor harness (To L29) |
| G17/N | Fan driver | G56/N | Console wire (To F01) |
| G18/N | Blower fan motor | G57/N | Console wire (To F05) |
| G19/BLK | Diode #2 | G58/N | Ashtray ILL |
| G20/BLK | Data link connector | G59/GRN | 4WD switch |
| G21/N | IG switch | G62/N | HLC control module |
| G22/N | Main switch (Key switch) | G63/N | Security option |
| G23/BLK | COMB switch | G64/N | Auto light sensor |
| G24/BLK | ICM | G67/YEL | Instrument panel harness (To Q01) |
| G25/N | COMB switch | G69/N | CO adjusting resistor |
| G26/YEL | Driver inflator | G71/BLU | Controller wire (To E90) |
| G27/YEL | Driver inflator | G72/N | Floor harness (To L27) |
| G28/GRN | COMB meter | G73/N | Floor harness (To L28) |
| G29/GRN | Front fog switch | G74/BLU | J/C |
| G30/N | BCM | G75/BLU | J/C |
| G31/N | BCM | G76/N | J/C |
| G32/N | BCM | G77/N | J/C |
| G33/N | Steering switch | G78/N | J/C |
| G34/N | Diagnosis connector #2 | G79/BLU | J/C |
| G35/BLU (IF EQPD) | Diagnosis connector #3 | G80/BLK | J/C |
| G36/N | Main harness (To E74) | G81/BLK | J/C |
| G37/N | Main harness (To E75) | G82/BLU | J/C |

**Q: A/B wire**

| No./Color | Connective position | No./Color | Connective position |
|---|---|---|---|
| Q01/YEL | Instrument panel harness (To G67) | Q02/BLK | Passenger inflator |

www.cargeek.ir

www.CarGeek.ir

## Door, Roof

S5JB0A910A003

### J: Front and rear door wire, rear door joint wire / K: Roof wire (RHD, 5dr)

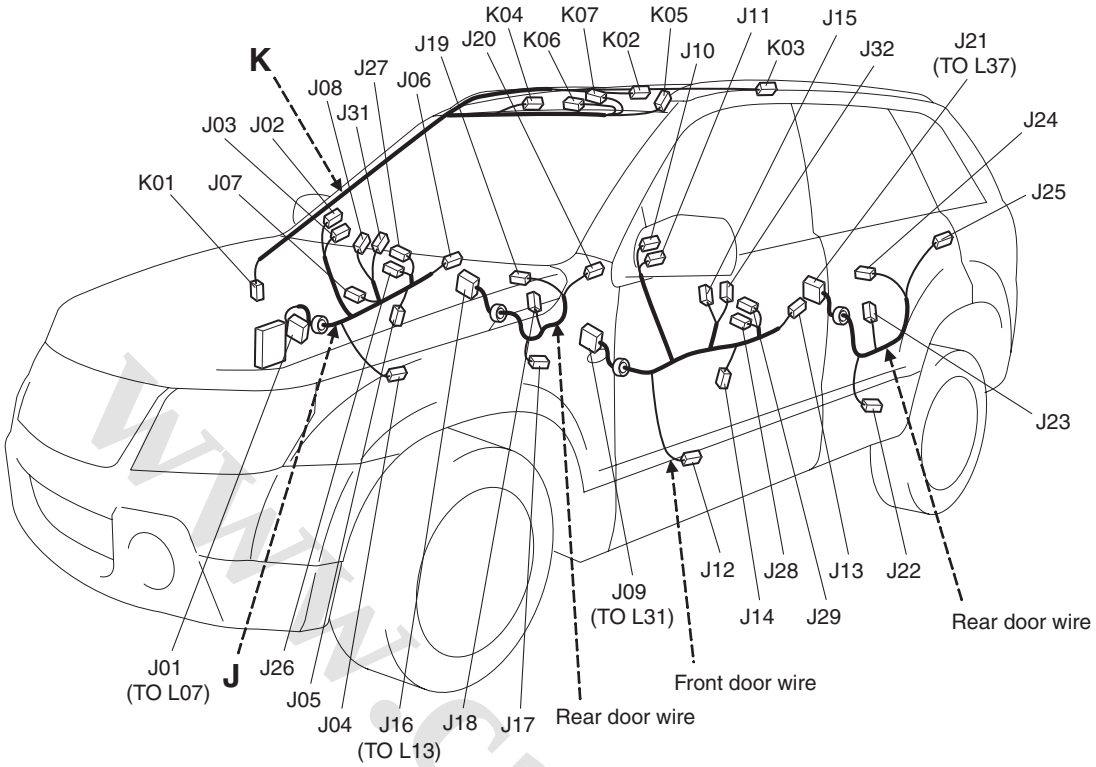


I5JB0A910911-02

### J: Front door wire (Drive side)

| No./Color | Connective position | No./Color | Connective position |
|---|---|---|---|
| J01/GRY | Floor harness (To L07) | J07/N | Power mirror switch (Driver side) |
| J02/BLK | Tweeter (R) | J08/GRY | Power window main switch |
| J03/N | Power mirror motor (R) | J26/N | Door antenna (Driver side) |
| J04/N | Front speaker (R) | J27/N | Request switch (Driver side) |
| J05/BLK | Front power window motor (Driver side) | J31/N | Curtsy lamp (Driver side) |
| J06/N | Front door lock motor (Driver side) | | |

### J: Front door wire (Passenger side)

| No./Color | Connective position | No./Color | Connective position |
|---|---|---|---|
| J09/GRY | Floor harness (To L31) | J14/BLK | Front power window motor (Passenger side) |
| J10/BLK | Tweeter (L) | J15/N | Power window sub switch |
| J11/N | Power mirror motor (L) | J28/N | Door antenna (Passenger side) |
| J12/N | Front speaker (L) | J29/N | Request switch (Passenger side) |
| J13/N | Front door lock motor (Passenger side) | J32/N | Curtsy lamp (Passenger side) |

### J: Rear door wire

| No./Color | Connective position | No./Color | Connective position |
|---|---|---|---|
| J16/N | Floor harness (To L13) | J21/N | Floor harness (To L37) |
| J17/N | Rear speaker (R) | J22/N | Rear speaker (L) |
| J18/BLK | Rear power window motor (R) | J23/BLK | Rear power window motor (L) |
| J19/N | Rear power window sub switch (R) | J24/N | Rear power window sub switch (L) |
| J20/N | Rear door lock motor (R) | J25/N | Rear door lock motor (L) |

### K: Roof wire

| No./Color | Connective position | No./Color | Connective position |
|---|---|---|---|
| K01/N | J/B | K05/N | Vanity lamp (Passenger side) |
| K02/N | Interior light | K06/N | Sliding roof unit |
| K03/N | Rear interior light | K07/N | Console (Sliding roof switch & console lamp) |
| K04/N | Vanity lamp (Driver side) | | |

www.cargeek.ir

www.CarGeek.ir


**J: Front and rear door wire, rear door joint wire / K: Roof wire (LHD, 5dr)**

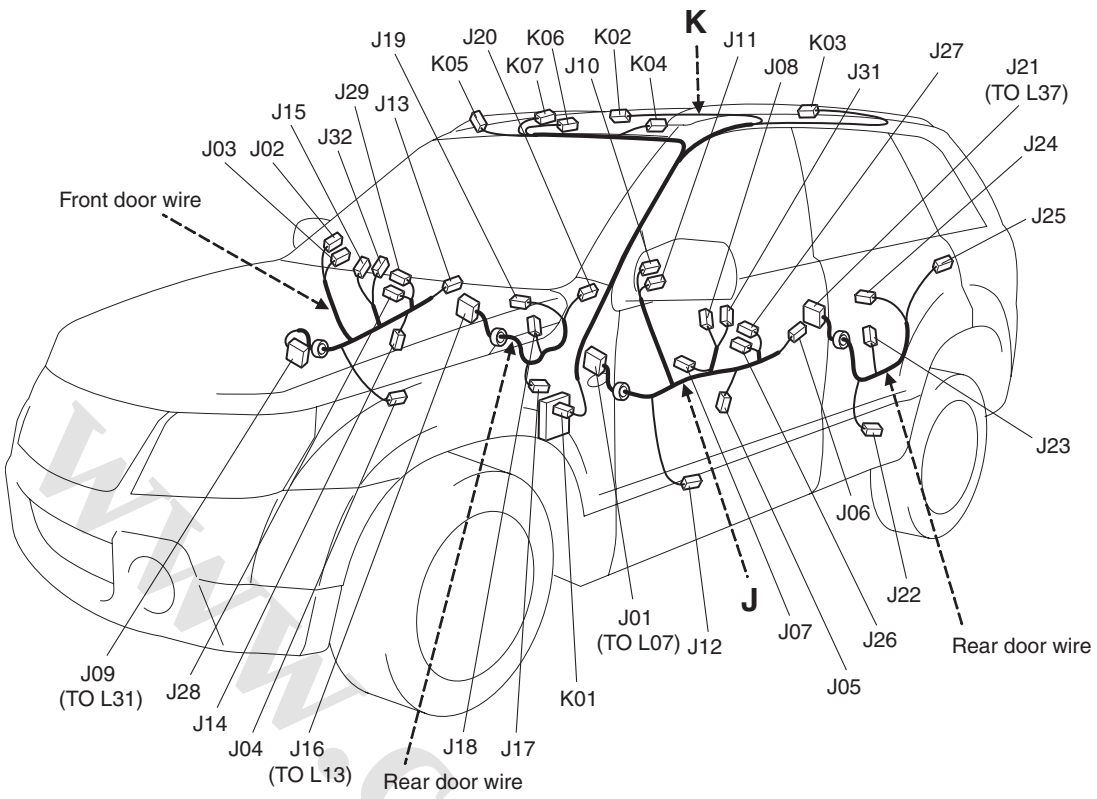


I5JB0A910912-03

**J: Front door wire (Drive side)**

| No./Color | Connective position | No./Color | Connective position |
|---|---|---|---|
| J01/GRY | Floor harness (To L07) | J07/N | Power mirror switch (Driver side) |
| J10/BLK | Tweeter (L) | J08/GRY | Power window main switch |
| J11/N | Power mirror motor (L) | J26/N | Door antenna (Driver side) |
| J12/N | Front speaker (L) | J27/N | Request switch (Driver side) |
| J05/BLK | Front power window motor (Driver side) | J31/N | Curtsy lamp (Driver side) |
| J06/N | Front door lock motor (Driver side) | | |

**J: Front door wire (Passenger side)**

| No./Color | Connective position | No./Color | Connective position |
|---|---|---|---|
| J09/GRY | Floor harness (To L31) | J14/BLK | Front power window motor (Passenger side) |
| J02/BLK | Tweeter (R) | J15/N | Power window sub switch |
| J03/N | Power mirror motor (R) | J28/N | Door antenna (Passenger side) |
| J04/N | Front speaker (R) | J29/N | Request switch (Passenger side) |
| J13/N | Front door lock motor (Passenger side) | J32/N | Curtsy lamp (Passenger side) |

**J: Rear door wire**

| No./Color | Connective position | No./Color | Connective position |
|---|---|---|---|
| J16/N | Floor harness (To L13) | J21/N | Floor harness (To L37) |
| J17/N | Rear speaker (R) | J22/N | Rear speaker (L) |
| J18/BLK | Rear power window motor (R) | J23/BLK | Rear power window motor (L) |
| J19/N | Rear power window sub switch (R) | J24/N | Rear power window sub switch (L) |
| J20/N | Rear door lock motor (R) | J25/N | Rear door lock motor (L) |

**K: Roof wire**

| No./Color | Connective position | No./Color | Connective position |
|---|---|---|---|
| K01/N | J/B | K05/N | Vanity lamp (Passenger side) |
| K02/N | Interior light | K06/N | Sliding roof unit |
| K03/N | Rear interior light | K07/N | Console (Sliding roof switch & console lamp) |
| K04/N | Vanity lamp (Driver side) | | |

www.cargeek.ir

www.CarGeek.ir

**J: Front and rear door wire / K: Roof wire (RHD, 3dr)**

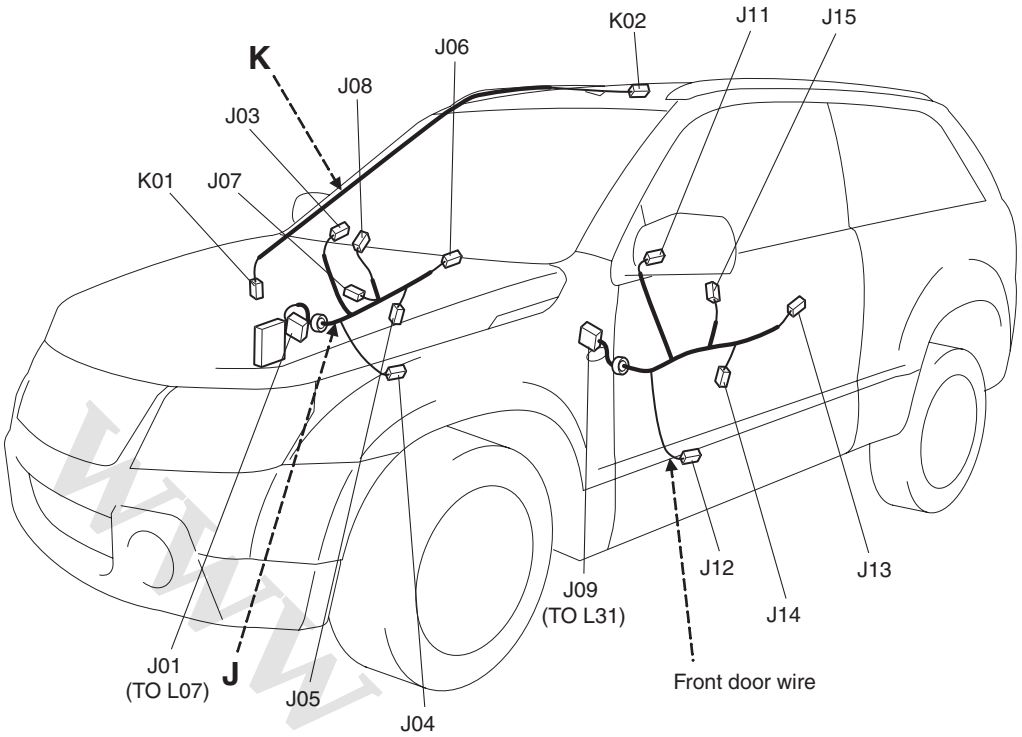


I5JB0A910913-02

**J: Front door wire (Drive side)**

| No./Color | Connective position | No./Color | Connective position |
|---|---|---|---|
| J01/GRY | Floor harness (To L07) | J06/N | Front door lock motor (Driver side) |
| J03/N | Power mirror motor (R) | J07/N | Power mirror switch (Driver side) |
| J04/N | Front speaker (R) | J08/GRY | Power window main switch |
| J05/BLK | Front power window motor (Driver side) | | |

**J: Front door wire (Passenger side)**

| No./Color | Connective position | No./Color | Connective position |
|---|---|---|---|
| J09/GRY | Floor harness (To L31) | J13/N | Front door lock motor (Passenger side) |
| J11/N | Power mirror motor (L) | J14/BLK | Front power window motor (Passenger side) |
| J12/N | Front speaker (L) | J15/N | Power window sub switch |

**K: Roof wire**

| No./Color | Connective position | No./Color | Connective position |
|---|---|---|---|
| K01/N | J/B | K02/N | Interior light |

www.cargeek.ir

www.CarGeek.ir


**J: Front and rear door wire / K: Roof wire (LHD, 3dr)**

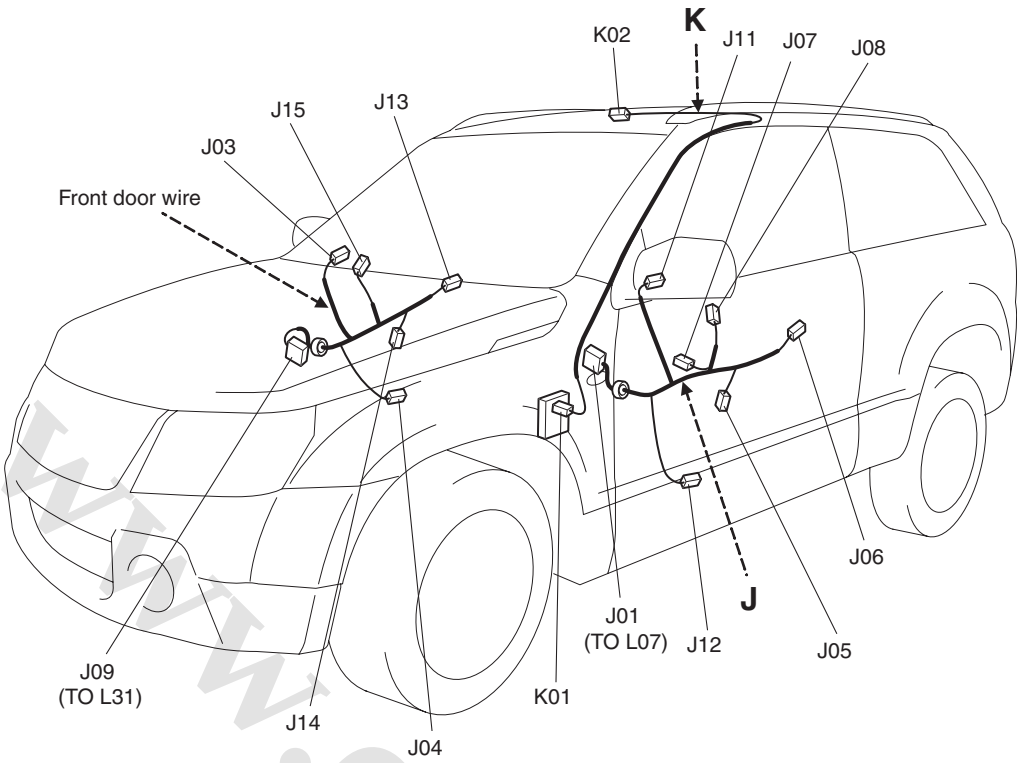


I5JB0A910914-03

**J: Front door wire (Drive side)**

| No./Color | Connective position | No./Color | Connective position |
|---|---|---|---|
| J01/GRY | Floor harness (To L07) | J06/N | Front door lock motor (Driver side) |
| J11/N | Power mirror motor (L) | J07/N | Power mirror switch (Driver side) |
| J12/N | Front speaker (L) | J08/GRY | Power window main switch |
| J05/BLK | Front power window motor (Driver side) | | |

**J: Front door wire (Passenger side)**

| No./Color | Connective position | No./Color | Connective position |
|---|---|---|---|
| J09/GRY | Floor harness (To L31) | J13/N | Front door lock motor (Passenger side) |
| J03/N | Power mirror motor (R) | J14/BLK | Front power window motor (Passenger side) |
| J04/N | Front speaker (R) | J15/N | Power window sub switch |

**K: Roof wire**

| No./Color | Connective position | No./Color | Connective position |
|---|---|---|---|
| K01/N | J/B | K02/N | Interior light |

www.cargeek.ir

www.CarGeek.ir

## Floor

S5JB0A910A004

**L: Floor harness, Rear height sensor wire / R: Fuel pump wire (RHD, 5dr)**

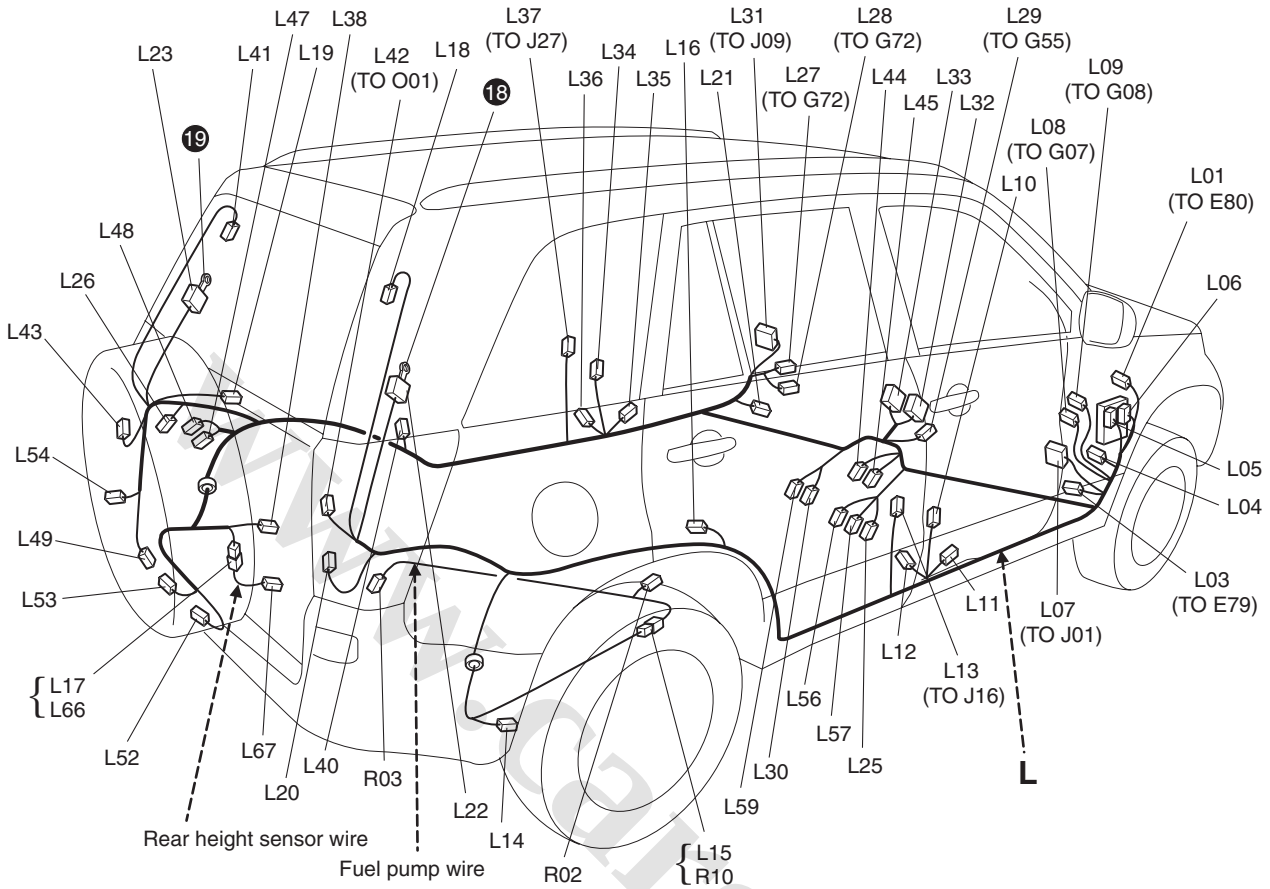


I5JB0A910915-02

**L: Floor harness**

| No./Color | Connective position | No./Color | Connective position |
|---|---|---|---|
| L01/N | Main harness (To E80) | L29/YEL | Instrument panel harness (To G55) |
| L03/YEL | Main harness (To E79) | L30/YEL | Side air-bag inflator (L) |
| L04/BLK | Turn signal relay | L31/GRY | Front door wire (Passenger side) (To J09) |
| L05/N | J/B | L32/YEL (With side A/B, Curtain A/B system) | A/B SDM |
| L06/N | J/B | L33/YEL (With side A/B, Curtain A/B system) | A/B SDM |
| L07/GRY | Front door wire (Driver side) (To J01) | L34/N | Front door switch (Passenger side) |
| L08/N | Instrument panel harness (To G07) | L35/YEL | Side air- bag sensor (L) |
| L09/BLU | Instrument panel harness (To G08) | L36/BLK | Pretensioner (Passenger side) |
| L10/N | Front door switch (Driver side) | L37/N | Rear door wire (L) (To J21) |
| L11/YEL | Side air-bag sensor (R) | L38/GRY | Wheel speed sensor (RL) |
| L12/BLK | Pretensioner (Driver side) | L40/N | Rear door switch (L) |
| L13/N | Rear door wire (R) (To J16) | L41/BLK | Side curtain air-bag (L) |
| L14/N | Wheel speed sensor (RR) | L42/N | Rear end door wire (To O01) |
| L15/GRY | Fuel pump wire (To R01) | L43/N | Rear combination lamp (L) |
| L16/N | Rear door switch (R) | L44/N | Keyless entry receiver |
| L17/GRY | Rear height sensor harness (To L66) | L45/BRN | Inside antenna |
| L18/BLK | Side curtain air-bag (R) | L47/N | ACC socket #1 |
| L19/GRY | Luggage compartment light | L48/N | ACC socket #1 |
| L20/N | Rear combination lamp (R) | L49/BRN | Luggage antenna |

www.cargeek.ir

| No./Color | Connective position | No./Color | Connective position |
|---|---|---|---|
| L21/BLK | Diode #3 | L52/N | Licence plate light #1 |
| L22/N | J/C | L53/N | Licence plate light #2 |
| L23/N | J/C | L54/N | Rear end door switch |
| L25/YEL | Side air-bag inflator (R) | L56/N | Seat belt switch (Without seat heater) |
| L26/N | Trailer | L57/N | Seat heater & Seat belt switch (Driver side) |
| L27/N | Instrument panel harness (To G72) | L59/N | Seat heater (Passenger side) |
| L28/N | Instrument panel harness (To G73) | | |

**L: Rear height sensor wire**

| No./Color | Connective position | No./Color | Connective position |
|---|---|---|---|
| L66/N | Floor harness (To L17) | L67/BLK | Rear height sensor |

**R: Fuel pump wire**

| No./Color | Connective position | No./Color | Connective position |
|---|---|---|---|
| R01/GRY | Floor harness (To L15) | R03/N | Fuel pump sub gauge |
| R02/GRY | Fuel pump and gauge | | |

**L: Floor harness, Rear height sensor wire / R: Fuel pump wire (LHD, 5dr)**

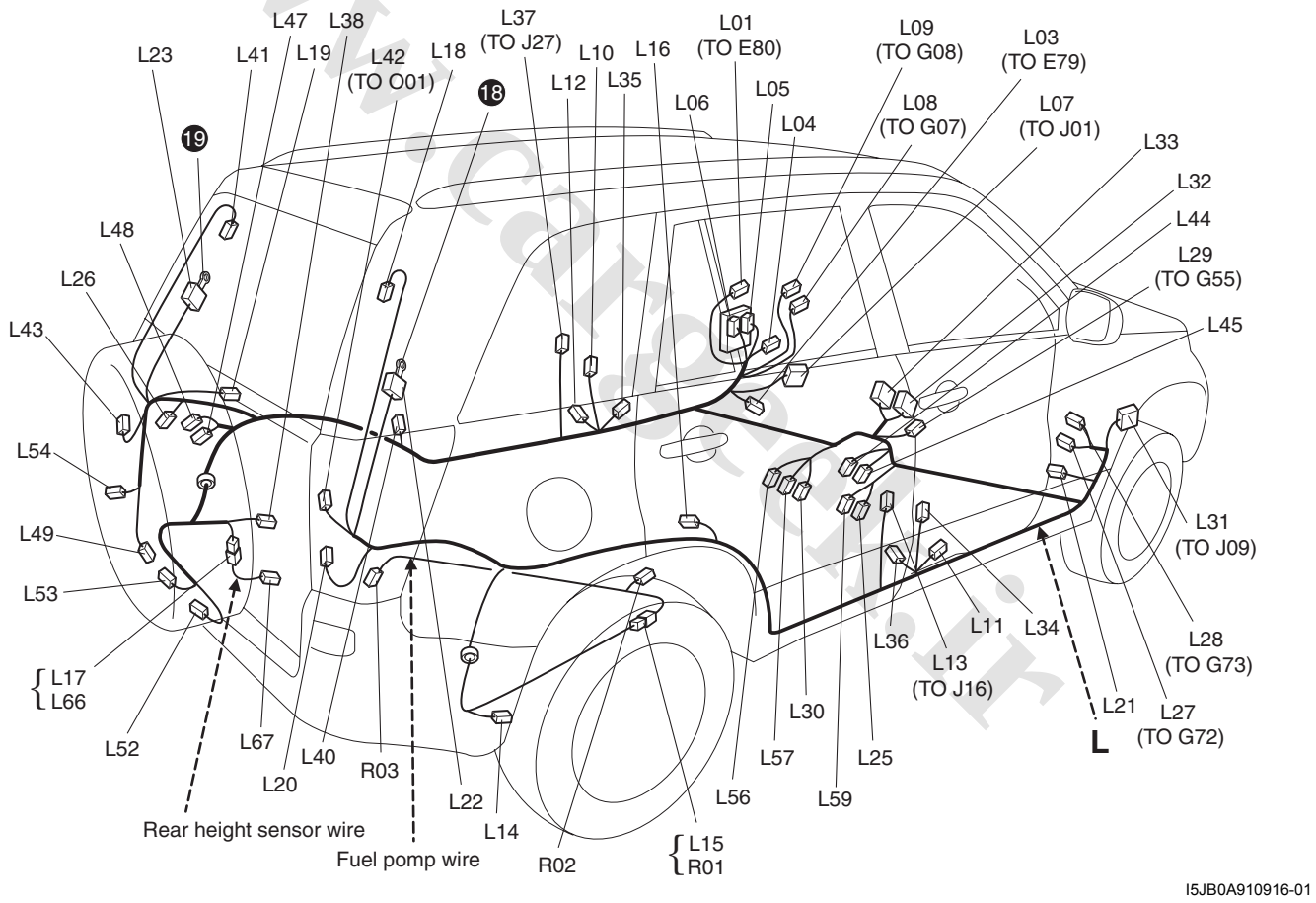

www.CarGeek.ir

**L: Floor harness**

| No./Color | Connective position | No./Color | Connective position |
|---|---|---|---|
| L01/N | Main harness (To E80) | L29/YEL | Instrument panel harness (To G55) |
| L03/YEL | Main harness (To E79) | L30/YEL | Side air-bag inflator (L) |
| L04/BLK | Turn signal relay | L31/GRY | Front door wire (Passenger side) (To J09) |
| L05/N | J/B | L32/YEL (With side A/B, Curtain A/B system) | A/B SDM |
| L06/N | J/B | L33/YEL (With side A/B, Curtain A/B system) | A/B SDM |
| L07/N | Front door wire (Driver side) (To J01) | L34/N | Front door switch (Passenger side) |
| L08/N | Instrument panel harness (To G07) | L35/YEL | Side air- bag sensor (L) |
| L09/BLU | Instrument panel harness (To G08) | L36/BLK | Pretensioner (Passenger side) |
| L10/N | Front door switch (Driver side) | L37/N | Rear door wire (L) (To J21) |
| L11/YEL | Side air-bag sensor (R) | L38/GRY | Wheel speed sensor (RL) |
| L12/BLK | Pretensioner (Driver side) | L40/N | Rear door switch (L) |
| L13/N | Rear door wire (R) (To J16) | L41/BLK | Side curtain air-bag (L) |
| L14/N | Wheel speed sensor (RR) | L42/N | Rear end door wire (To O01) |
| L15/GRY | Fuel pump wire (To R01) | L43/N | Rear combination lamp (L) |
| L16/N | Rear door switch (R) | L44/N | Keyless entry receiver |
| L17/GRY | Rear height sensor harness (To L66) | L45/BRN | Inside antenna |
| L18/BLK | Side curtain air-bag (R) | L47/N | ACC socket #1 |
| L19/GRY | Luggage compartment light | L48/N | ACC socket #1 |
| L20/N | Rear combination lamp (R) | L49/BRN | Luggage antenna |
| L21/BLK | Diode #3 | L52/N | Licence plate light #1 |
| L22/N | J/C | L53/N | Licence plate light #2 |
| L23/N | J/C | L54/N | Rear end door switch |
| L25/YEL | Side air-bag inflator (R) | L56/N | Seat belt switch (Without seat heater) |
| L26/N | Trailer | L57/N | Seat heater & Seat belt switch (Driver side) |
| L27/N | Instrument panel harness (To G72) | L59/N | Seat heater (Passenger side) |
| L28/N | Instrument panel harness (To G73) | | |

**L: Rear height sensor wire**

| No./Color | Connective position | No./Color | Connective position |
|---|---|---|---|
| L66/N | Floor harness (To L17) | L67/BLK | Rear height sensor |

**R: Fuel pump wire**

| No./Color | Connective position | No./Color | Connective position |
|---|---|---|---|
| R01/GRY | Floor harness (To L15) | R03/N | Fuel pump sub gauge |
| R02/GRY | Fuel pump and gauge | | |

www.cargeek.ir

**L: Floor harness, Luggage compartment light wire, Rear height sensor wire / R: Fuel pump wire (RHD, 3dr)**

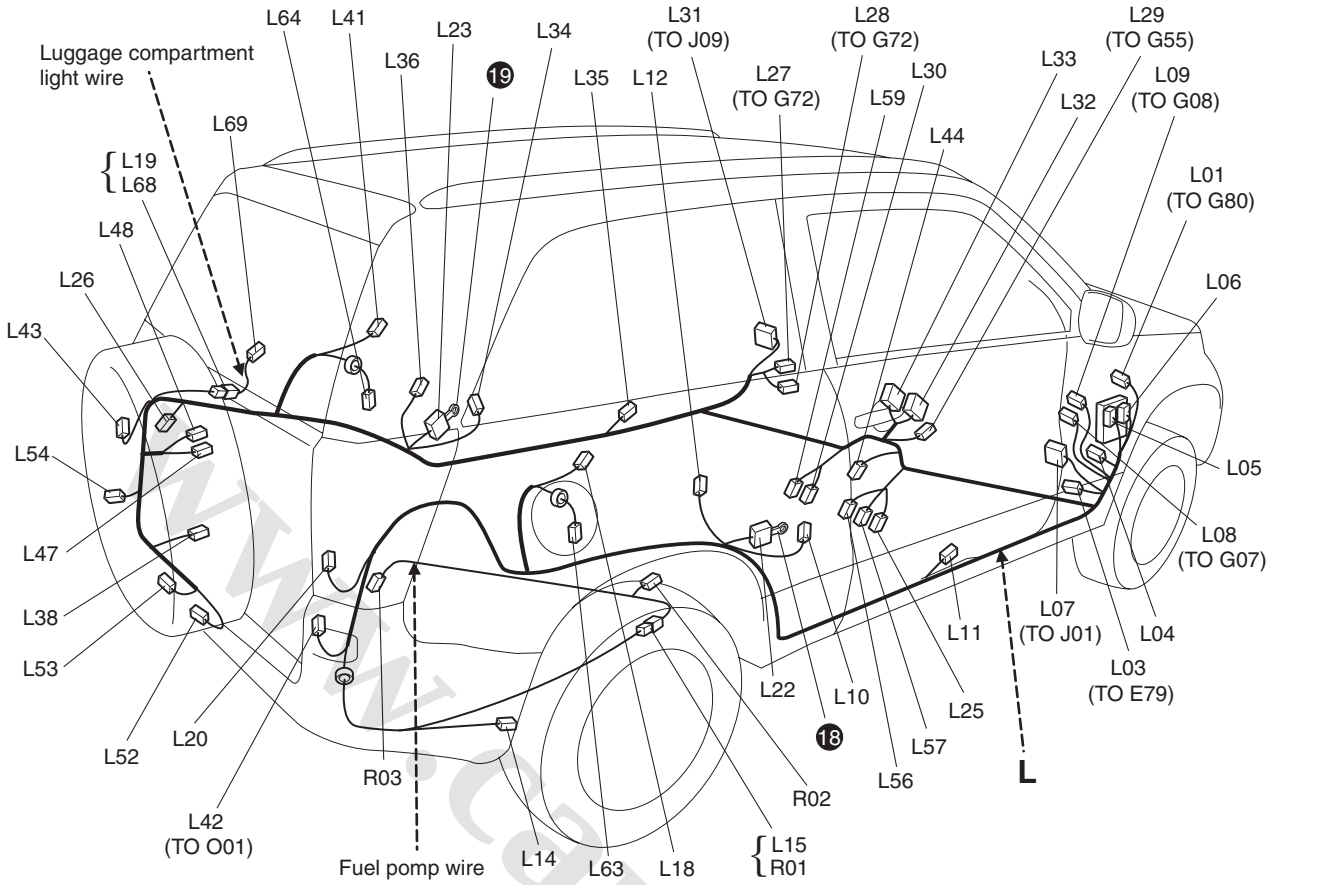


I5JB0A910917-02

**L: Floor harness**

| No./Color | Connective position | No./Color | Connective position |
|---|---|---|---|
| L01/N | Main harness (To E80) | L30/YEL | Side air-bag inflator (L) |
| L03/YEL | Main harness (To E79) | L31/GRY | Front door wire (Passenger side) (To J09) |
| L04/BLK | Turn signal relay | L32/YEL (With side A/B, Curtain A/B system) | A/B SDM |
| L05/N | J/B | L33/YEL (With side A/B, Curtain A/B system) | A/B SDM |
| L06/N | J/B | L34/N | Front door switch (Passenger side) |
| L07/GRY | Front door wire (Driver side) (To J01) | L35/YEL | Side air- bag sensor (L) |
| L08/N | Instrument panel harness (To G07) | L36/BLK | Pretensioner (Passenger side) |
| L09/BLU | Instrument panel harness (To G08) | L38/GRY | Wheel speed sensor (RL) |
| L10/N | Front door switch (Driver side) | L41/BLK | Side curtain air-bag (Passenger side) |
| L11/YEL | Side air-bag sensor (R) | L42/N | Rear end door wire (To O01) |
| L12/BLK | Pretensioner (Driver side) | L43/N | Rear combination lamp (L) |
| L14/N | Wheel speed sensor (RR) | L44/N | Keyless entry receiver |
| L15/GRY | Fuel pump wire (To R01) | L47/N | ACC socket #1 |
| L18/BLK | Side curtain air-bag (Driver side) | L48/N | ACC socket #1 |
| L19/N | Luggage compartment light wire (To L68) | L52/N | Licence plate light #1 |
| L20/N | Rear combination lamp (R) | L53/N | Licence plate light #2 |
| L22/N | J/C | L54/N | Rear end door switch |
| L23/N | J/C | L56/N | Seat belt switch (Without seat heater) |
| L25/YEL | Side air-bag inflator (R) | L57/N | Seat heater & Seat belt switch (Driver side) |
| L26/N | Trailer | L59/N | Seat heater (Passenger side) |

www.CarGeek.ir

| No./Color | Connective position | No./Color | Connective position |
|---|---|---|---|
| L27/N | Instrument panel harness (To G72) | L63/N | Rear speaker (R) |
| L28/N | Instrument panel harness (To G73) | L64/N | Rear speaker (L) |
| L29/YEL | Instrument panel harness (To G55) | | |

**L: Luggage compartment light wire**

| No./Color | Connective position | No./Color | Connective position |
|---|---|---|---|
| L68/N | Floor harness (To L19) | L69/N | Luggage compartment light |

**R: Fuel pump wire**

| No./Color | Connective position | No./Color | Connective position |
|---|---|---|---|
| R01/GRY | Floor harness (To L15) | R03/N | Fuel pump sub gauge |
| R02/GRY | Fuel pump and gauge | | |

**L: Floor harness, Luggage compartment light wire, Rear height sensor wire / R: Fuel pump wire (LHD, 3dr)**

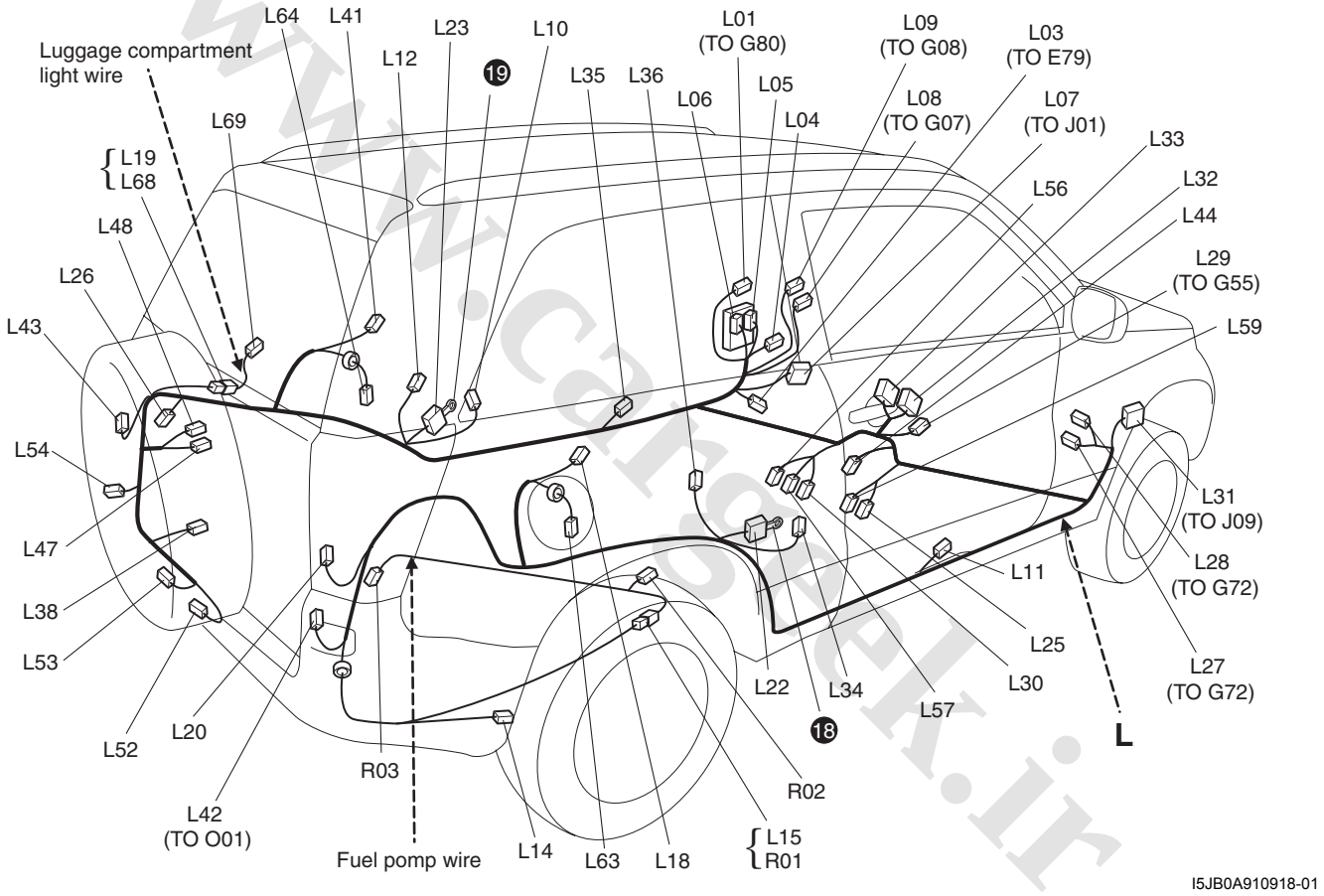


www.cargeek.ir

**L: Floor harness**

| No./Color | Connective position | No./Color | Connective position |
|---|---|---|---|
| L01/N | Main harness (To E80) | L30/YEL | Side air-bag inflator (L) |
| L03/YEL | Main harness (To E79) | L31/GRY | Front door wire (Passenger side) (To J09) |
| L04/BLK | Turn signal relay | L32/YEL (With side A/B, Curtain A/B system) | A/B SDM |
| L05/N | J/B | L33/YEL (With side A/B, Curtain A/B system) | A/B SDM |
| L06/N | J/B | L34/N | Front door switch (Passenger side) |
| L07/GRY | Front door wire (Driver side) (To J01) | L35/YEL | Side air- bag sensor (L) |
| L08/N | Instrument panel harness (To G07) | L36/BLK | Pretensioner (Passenger side) |
| L09/BLU | Instrument panel harness (To G08) | L38/GRY | Wheel speed sensor (RL) |
| L10/N | Front door switch (Driver side) | L41/BLK | Side curtain air-bag (Passenger side) |
| L11/YEL | Side air-bag sensor (R) | L42/N | Rear end door wire (To O01) |
| L12/BLK | Pretensioner (Driver side) | L43/N | Rear combination lamp (L) |
| L14/N | Wheel speed sensor (RR) | L44/N | Keyless entry receiver |
| L15/GRY | Fuel pump wire (To R01) | L47/N | ACC socket #1 |
| L18/BLK | Side curtain air-bag (Driver side) | L48/N | ACC socket #1 |
| L19/N | Luggage compartment light wire (To L68) | L52/N | Licence plate light #1 |
| L20/N | Rear combination lamp (R) | L53/N | Licence plate light #2 |
| L22/N | J/C | L54/N | Rear end door switch |
| L23/N | J/C | L56/N | Seat belt switch |
| L25/YEL | Side air-bag inflator (R) | L57/N | Seat heater (Driver side) |
| L26/N | Trailer | L59/N | Seat heater (Passenger side) |
| L27/N | Instrument panel harness (To G72) | L63/N | Rear speaker (R) |
| L28/N | Instrument panel harness (To G73) | L64/N | Rear speaker (L) |
| L29/YEL | Instrument panel harness (To G55) | | |

**L: Luggage compartment light wire**

| No./Color | Connective position | No./Color | Connective position |
|---|---|---|---|
| L68/N | Floor harness (To L19) | L69/N | Luggage compartment light |

**R: Fuel pump wire**

| No./Color | Connective position | No./Color | Connective position |
|---|---|---|---|
| R01/GRY | Floor harness (To L15) | R03/N | Fuel pump sub gauge |
| R02/GRY | Fuel pump and gauge | | |

www.cargeek.ir

www.CarGeek.ir

## Rear

S5JB0A910A005

**O: Rear end door harness**

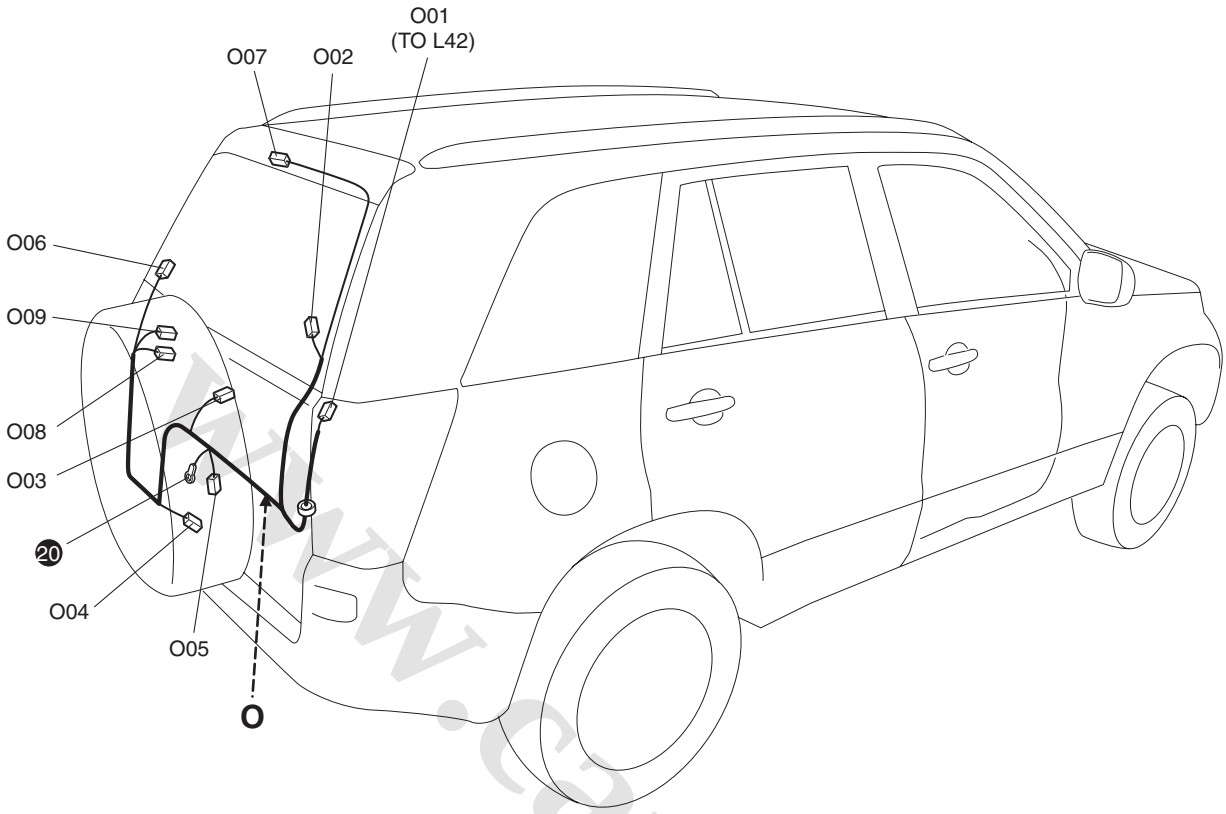


I5JB0A910919-01

**O: Rear end door harness**

| No./Color | Connective position | No./Color | Connective position |
|---|---|---|---|
| O01/N | Floor harness (To L42) | O06/BLK | Rear defogger (–) |
| O02/BLK | Rear defogger (+) | O07/N | High mounted stop lamp |
| O03/N | Rear wiper motor | O08/N | Rear end antenna |
| O04/GRY | Rear end door lock motor | O09/N | Rear end door request switch |
| O05/N | Rear wiper relay | | |

www.cargeek.ir

# Ground Point

## Ground (earth) Point

S5JB0A910C001

Refer to “Connector Layout Diagram: ”.

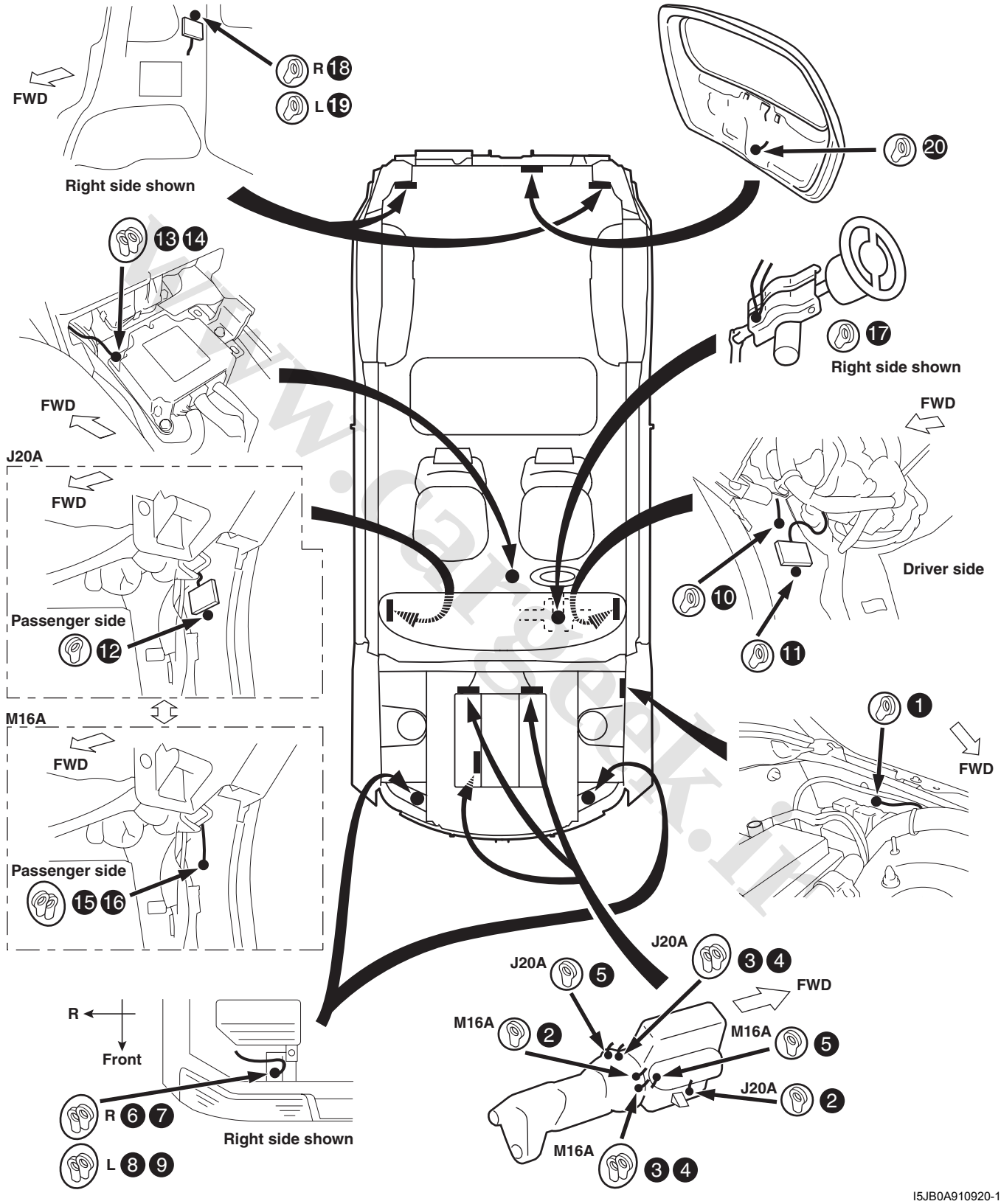


I5JB0A910920-13

www.CarGeek.ir

# Power Supply Diagram

## Power Supply Diagram

S5JB0A910D001

www.cargeek.ir

www.cargeek.ir

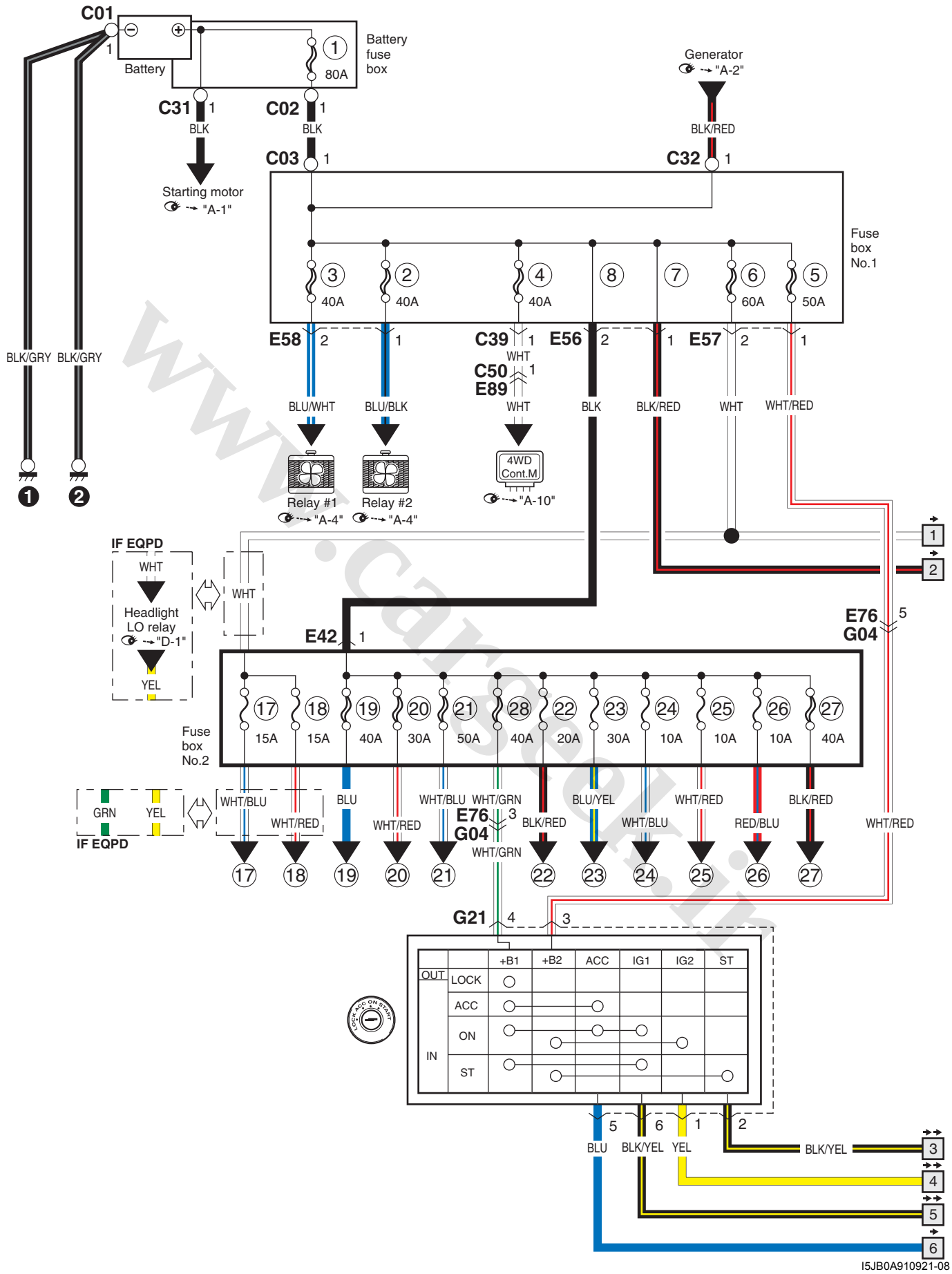


I5JB0A910921-08

www.CarGeek.ir

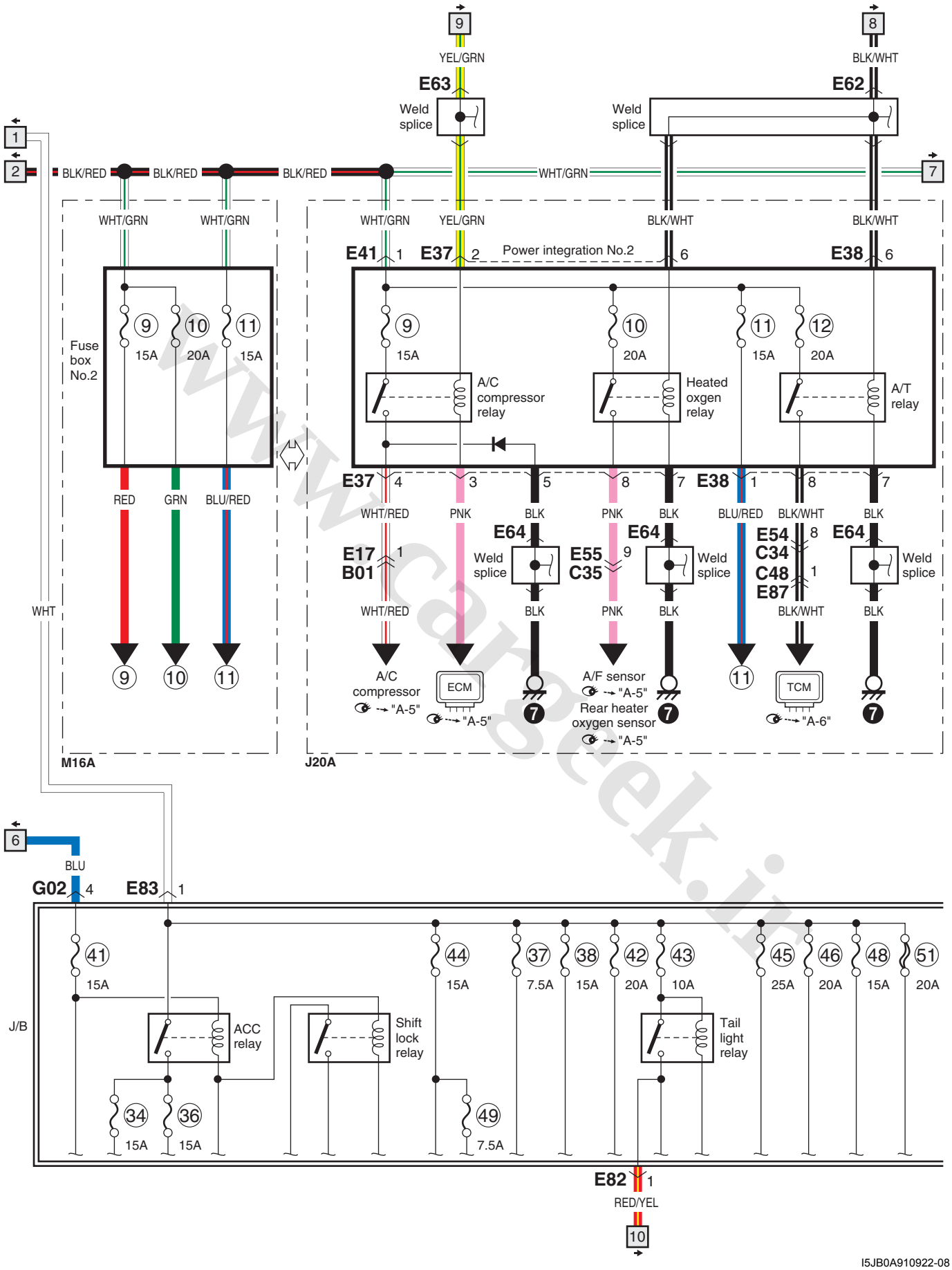


www.cargeek.ir

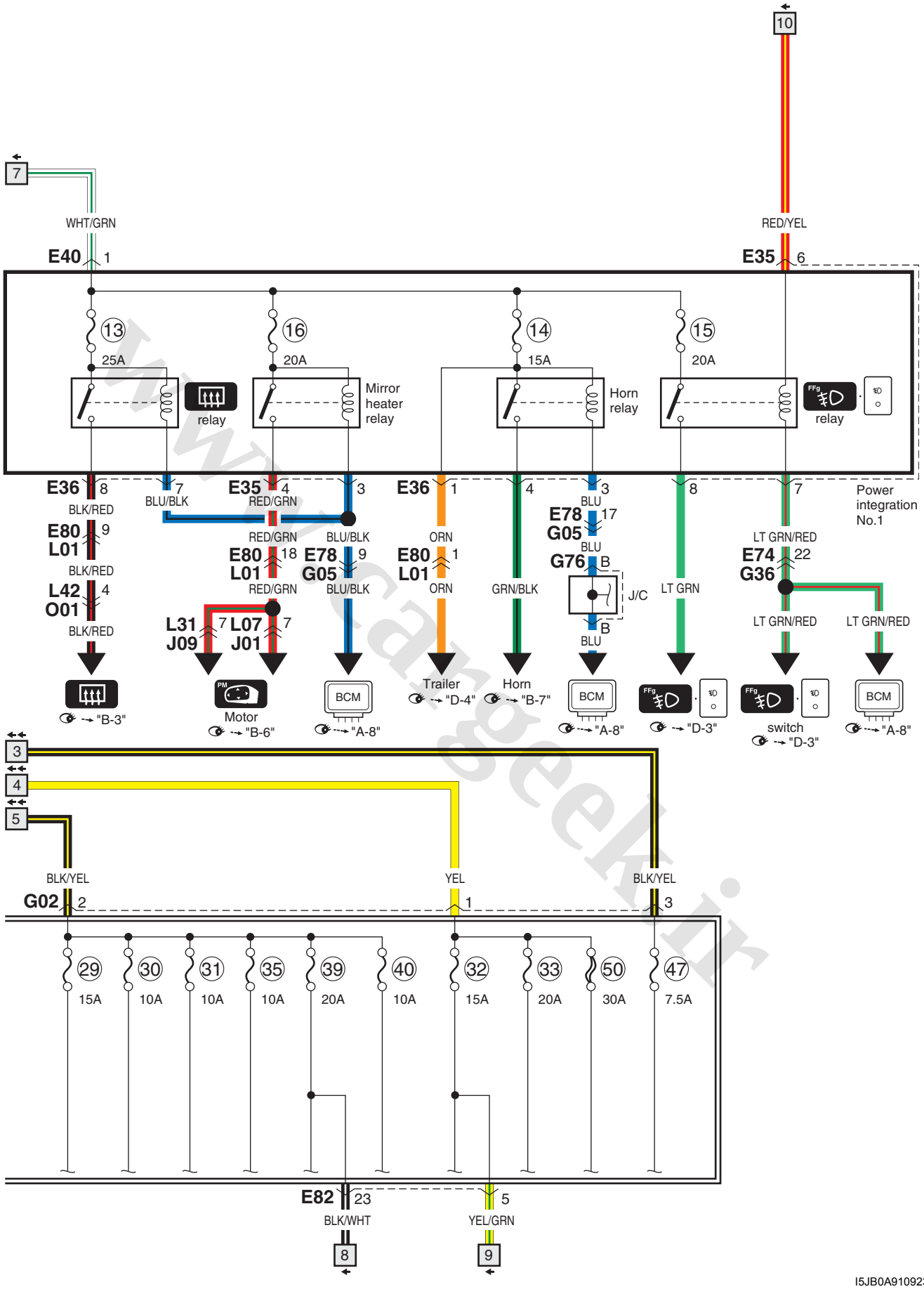


I5JB0A910923-06

www.CarGeek.ir

## Fuses and the Protected Parts

S5JB0A910D002

The chart below describes what parts each fuse protects.

## Fuses in Battery Fuse Box, Fuse Box No.1

S5JB0A910D003

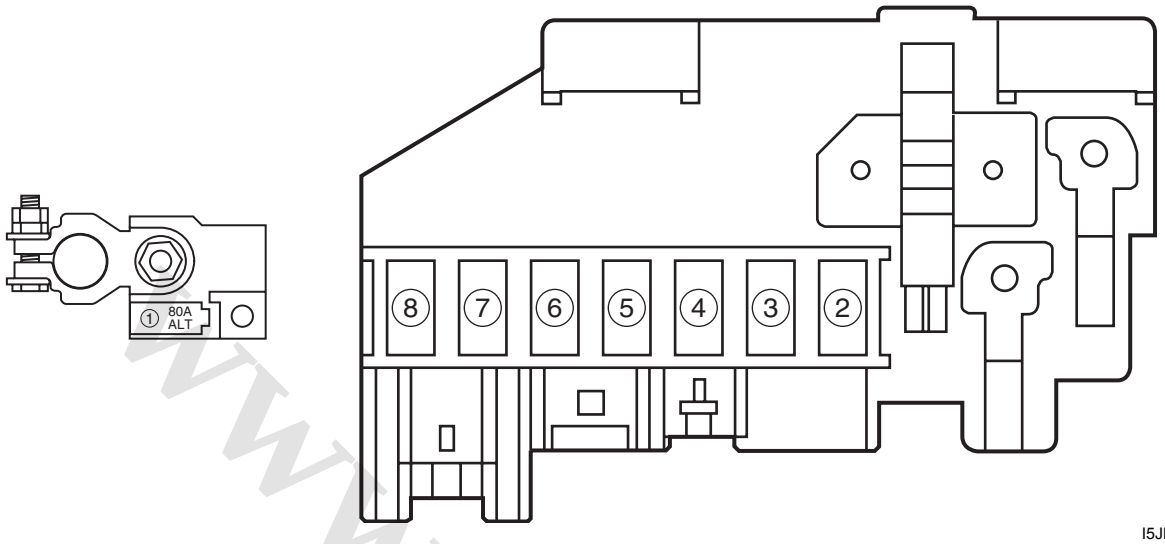


I5JB0A910924-01

| No. | Fuse | Protected circuit |
|---|---|---|
| ① | 80 A | All electric circuit |
| | | Battery |
| | | Fuse box No.1 |
| ② | 40 A | Radiator fan relay #2 |
| ③ | 40 A | Radiator fan relay #1 |
| ④ | 40 A | 4WD control module |
| ⑤ | 50 A | IG switch |
| ⑥ | 60 A | Fuse box No.2 |
| | | Headlight LO relay |
| | | J/B |
| ⑦ | NO FUSE | Power integration No.1 |
| | | Power integration No.2 |
| | | Fuse box No.2 |
| ⑧ | NO FUSE | Fuse box No.2 |

www.cargeek.ir

## Fuse Box No.2 (In Power Integration No.1, Power Integration No.2), Relay Box

S5JB0A910D004

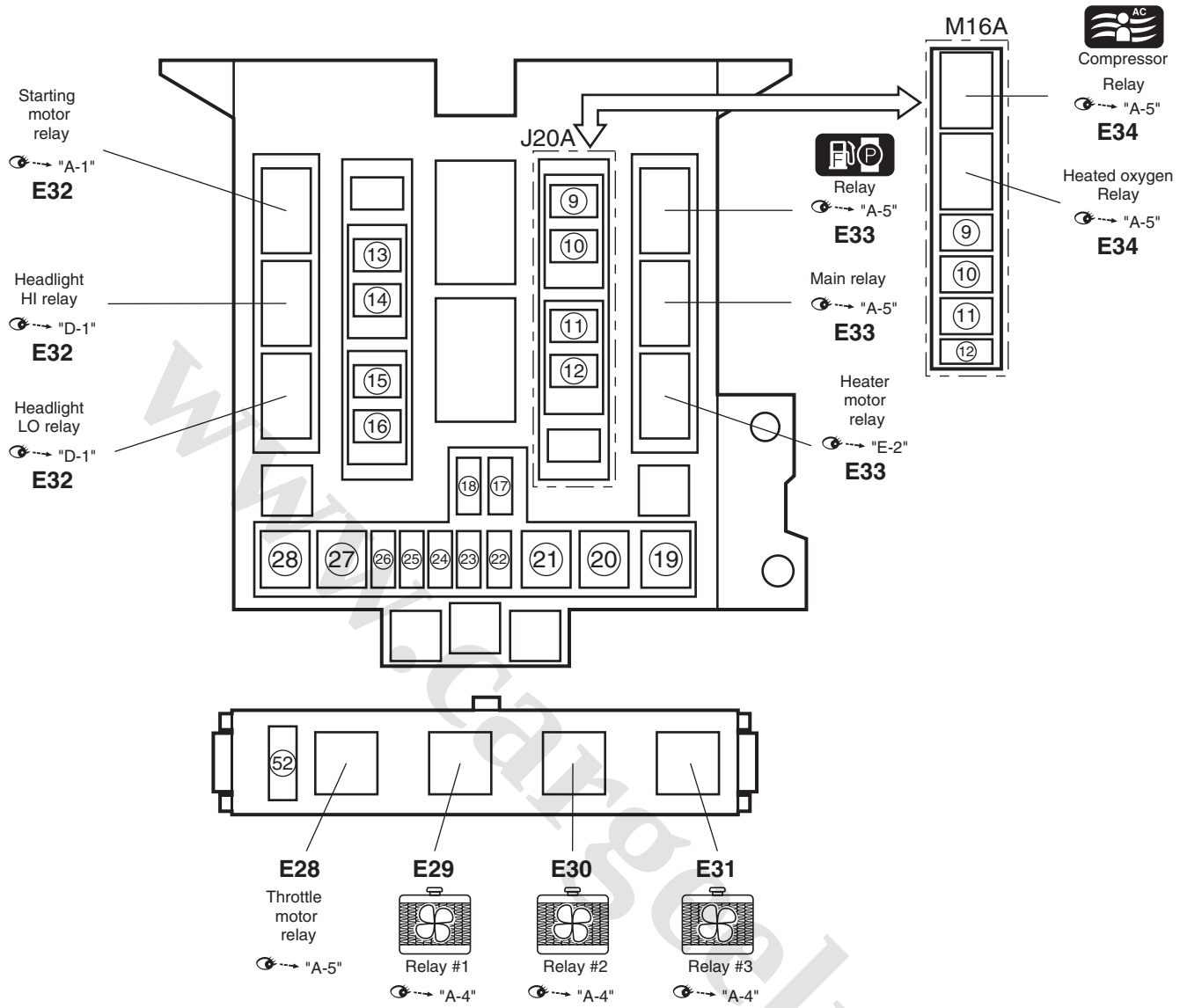


I5JB0A910925-03

| No. | Fuse | Description on the cover | Protected circuit |
|---|---|---|---|
| ⑨ | 15 A | CPRSR | A/C compressor relay |
| ⑩ | 20 A | O2 HTR | Heated oxygen relay |
| ⑪ | 15 A | THR MOT | Throttle motor relay |
| ⑫ | 20 A | AT | A/T relay |
| ⑬ | 25 A | RR DEF | Rear defogger relay |
| ⑭ | 15 A | HORN | Horn relay |
| ⑮ | 20 A | FR FOG | Front fog light relay |
| ⑯ | 20 A | MRR HTR | Mirror heater relay |
| ⑰ | 15 A | H/L LO L | Headlight LO (L) |
| | | | Headlight LO relay |
| | | | Headlight HID (L) |
| ⑱ | 15 A | H/L LO R | Headlight LO (R) |
| | | | Headlight LO relay |
| | | | Headlight HID (R) |
| ⑲ | 40 A | FR BLW | Heater motor relay |
| ⑳ | 30 A | ABS2 | ABS control module |
| ㉑ | 50 A | ABS1 | ABS control module |
| ㉒ | 20 A | FI | Main relay |
| ㉓ | 30 A | H/L CLNR | HLC motor |

www.cargeek.ir

www.CarGeek.ir

| No. | Fuse | Description on the cover | Protected circuit |
|---|---|---|---|
| ㉔ | 10 A | H/L L | Headlight (L) |
| | | | Headlight HI (L) |
| ㉕ | 10 A | H/L R | Headlight (R) |
| | | | Headlight HI (R) |
| ㉖ | 10 A | H/L | Headlight HI relay |
| | | | Headlight LO relay |
| ㉗ | 40 A | ST | Starting motor relay |
| ㉘ | 40 A | IGN | IG switch |
| ㊷ | 15 A | DI | BLANK |

## Fuse Box No.3 (In J/B)

S5JB0A910D005

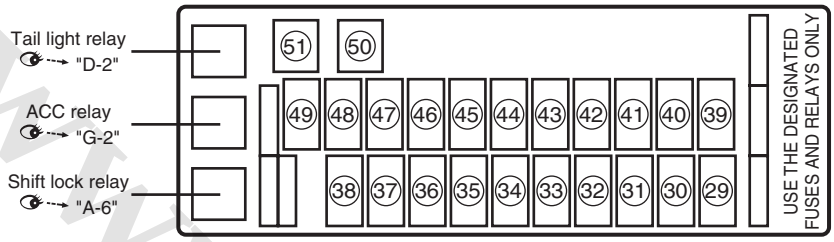


I5JB0A910926-02

| No. | Fuse | Description on the cover | Protected circuit |
|---|---|---|---|
| ㉙ | 15 A | A/B | A/B SDM |
| ㉚ | 10 A | ABS/ESP | ABS control module |
| ㉛ | 10 A | BACK | Smart ECM |
| | | | Back-up light switch |
| | | | Transmission range sensor |
| | | | Headlight beam leveling switch |
| | | | Headlight beam leveling actuator (L) |
| | | | Headlight beam leveling actuator (R) |
| | | | Auto leveling control module |
| ㉜ | 15 A | IG2 SIG | Radiator fan relay #1 |
| | | | Radiator fan relay #2 |
| | | | Radiator fan relay #3 |
| | | | A/C compressor relay |
| | | | Seat heater switch (Driver side) |
| | | | Seat heater switch (Passenger side) |
| | | | Sliding roof unit |
| | | | Heater motor relay |
| ㉝ | 20 A | WIP | COMB switch |
| | | | Windshield washer motor |
| | | | Windshield wiper motor |
| | | | Rear washer motor |
| | | | Rear wiper motor |
| | | | Rear wiper relay |
| | | | Headlight cleaner control module |
| ㉞ | 15 A | ACC2 | Cigar lighter (ACC Socket #3) |
| ㉟ | 10 A | CRUISE | Brake light switch |
| | | | Steering switch |
| ㊱ | 15 A | ACC3 | ACC socket #1 |
| | | | ACC socket #2 |
| ㊲ | 7.5 A | RR FOG | COMB switch (Rear fog light) |
| ㊳ | 15 A | STOP | Brake light switch |

www.cargeek.ir

| No. | Fuse | Description on the cover | Protected circuit |
|---|---|---|---|
| ㊴ | 20 A | IG COIL | Generator |
| | | | IG coil #1 |
| | | | IG coil #2 |
| | | | IG coil #3 |
| | | | IG coil #4 |
| | | | Noise filter |
| | | | ECM |
| | | | Fuel pump relay |
| | | | Heated oxygen relay |
| | | | A/T relay |
| | | | ICM |
| | | | 4WD control module |
| ㊵ | 10 A | METER | BCM |
| | | | COMB meter |
| | | | Turn signal relay |
| | | | Auto A/C unit |
| ㊶ | 15 A | ACC | ACC relay |
| | | | BCM |
| | | | Power mirror switch |
| | | | Smart ECM |
| | | | Audio |
| | | | Multi information display |
| ㊷ | 20 A | D/L | BCM |
| ㊸ | 10 A | TAIL | Tail light relay |
| ㊹ | 15 A | DOME | Audio |
| | | | Auto A/C unit |
| | | | ECM |
| | | | DLC |
| | | | TCM |
| | | | BCM |
| | | | Main switch |
| | | | Smart ECM |
| | | | Multi information display |
| | | | COMB meter |
| | | | Interior light |
| | | | Rear interior light |
| | | | Console lamp |
| | | | Luggage compartment light |
| | | | Curtain lamp (Driver side) |
| | | | Curtain lamp (Passenger side) |
| ㊺ | 25 A | S/R | Sliding roof unit |
| ㊻ | 20 A | RR BLW | BLANK |
| ㊼ | 7.5 A | ST SIG | Starting motor relay |
| ㊽ | 15 A | HAZ | Turn signal relay |
| ㊾ | 7.5 A | VANITY | Vanity lamp (Driver side) |
| | | | Vanity lamp (passenger side) |
| ㊿ | 30 A | P/W | Front power window main switch |
| | | | Front power window sub switch |
| | | | Rear power window sub switch (R) |
| | | | Rear power window sub switch (L) |
| (51) | 20 A | P/W T | BLANK |

www.CarGeek.ir

www.CarGeek.ir

## Junction Block (J/B) Connector / Fuse Layout

S5JB0A910D006

### Fuse side

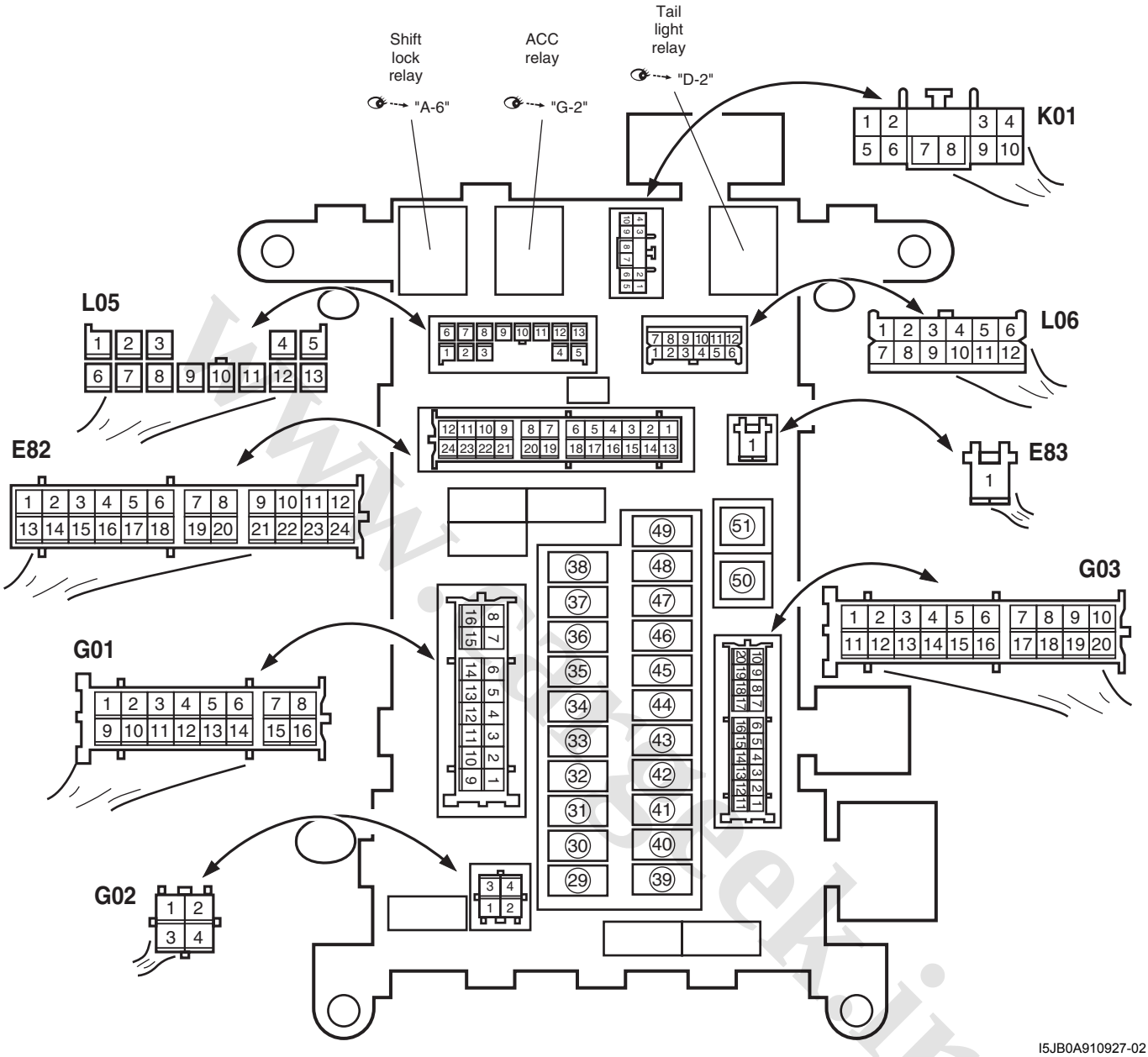


I5JB0A910927-02

www.cargeek.ir

## Junction Block Inner Circuit (Overview)

S5JB0A910D007

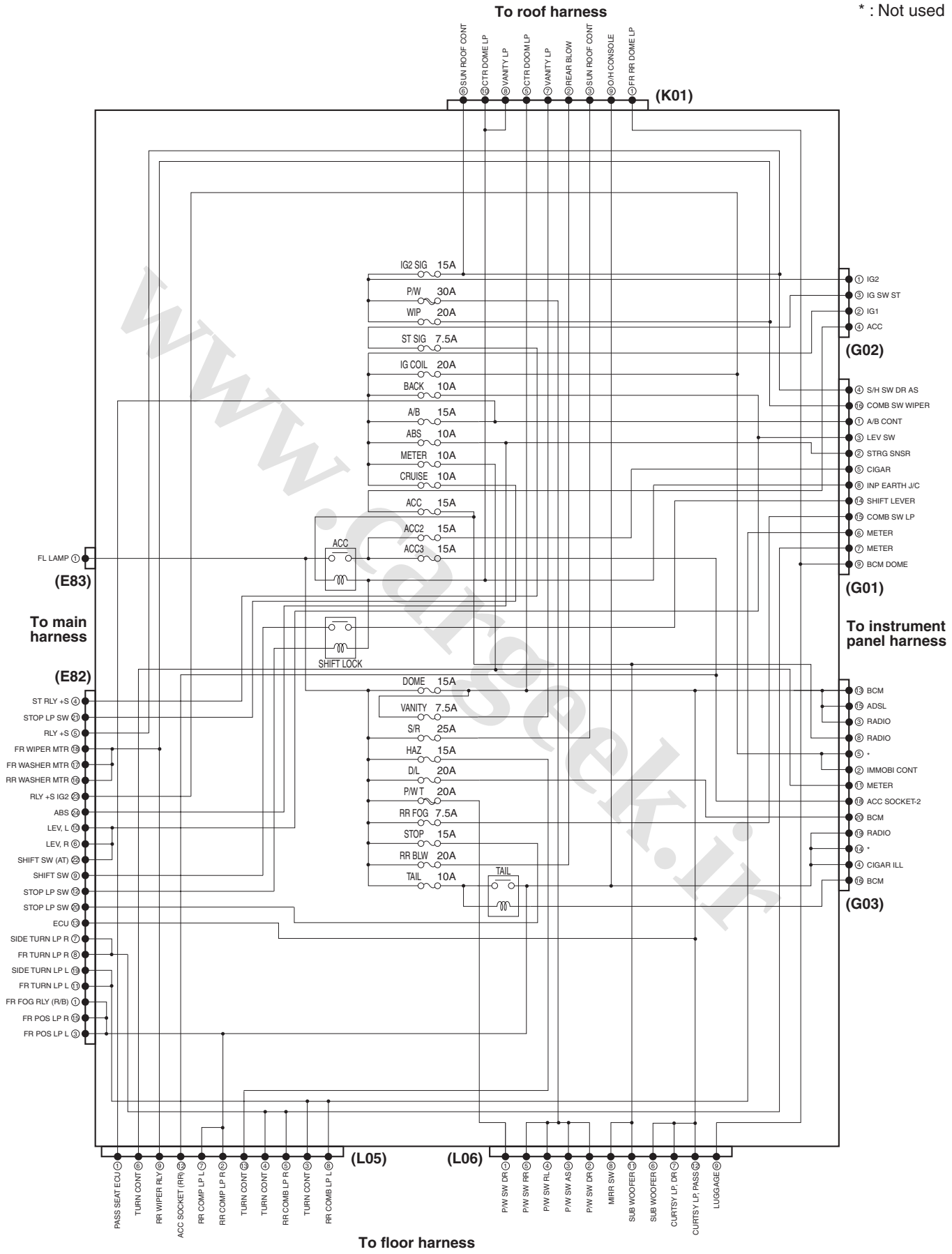


I5JB0A910928-08

www.cargeek.ir

www.CarGeek.ir

## Junction Block Inner Circuit (Detail)

S5JB0A910D008

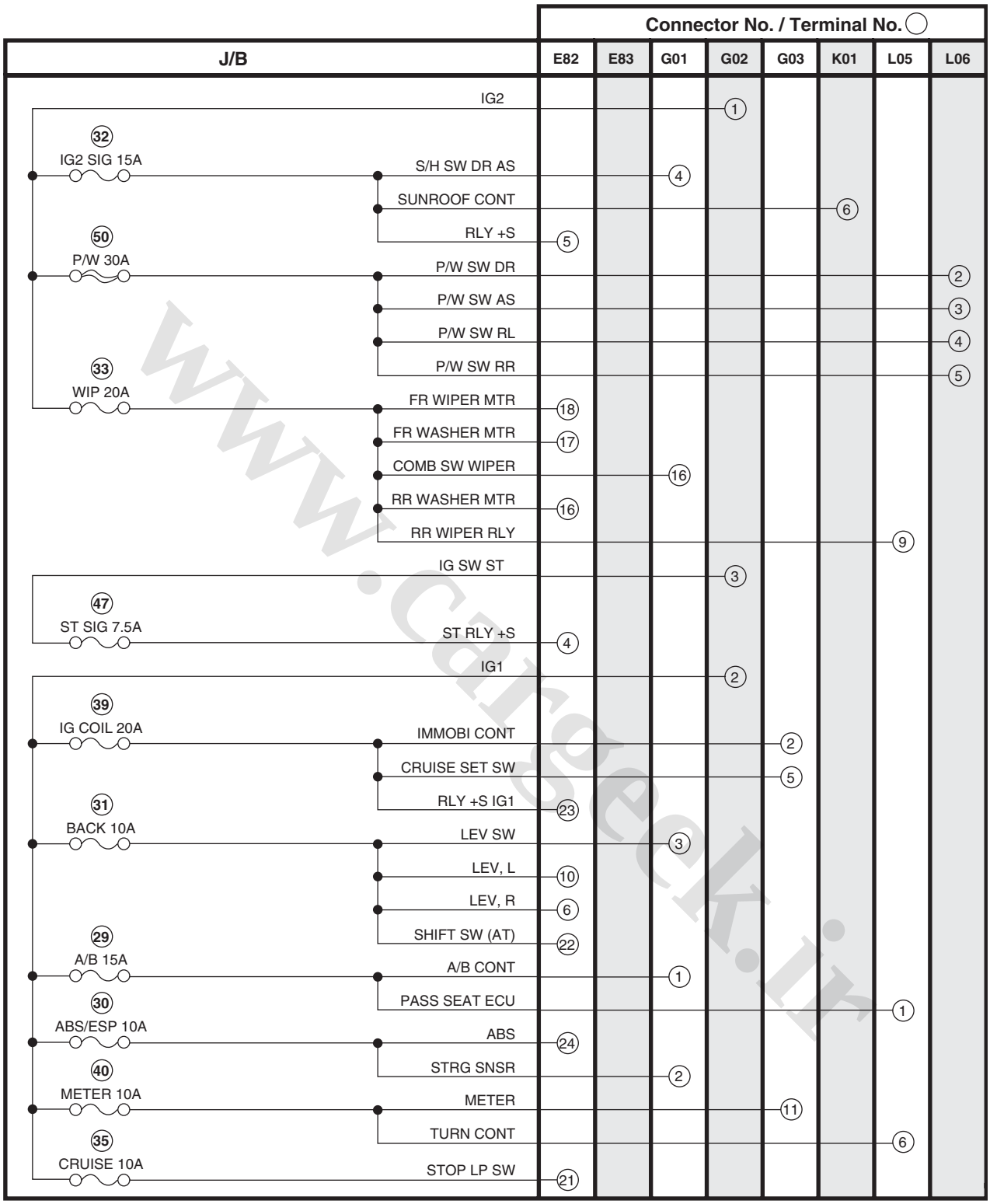


(Continued)

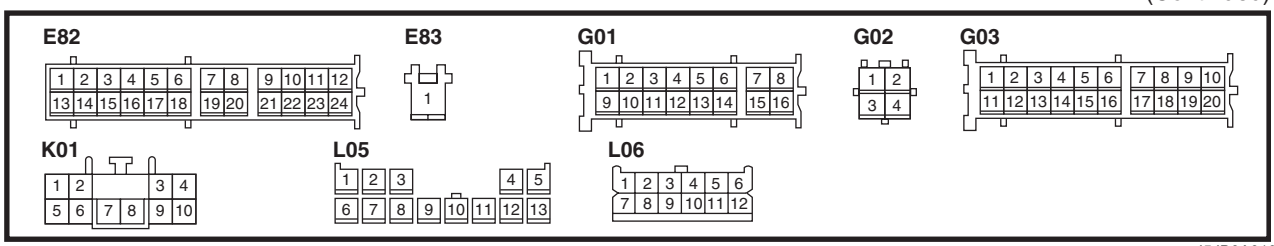


I5JB0A910992-02

www.cargeek.ir

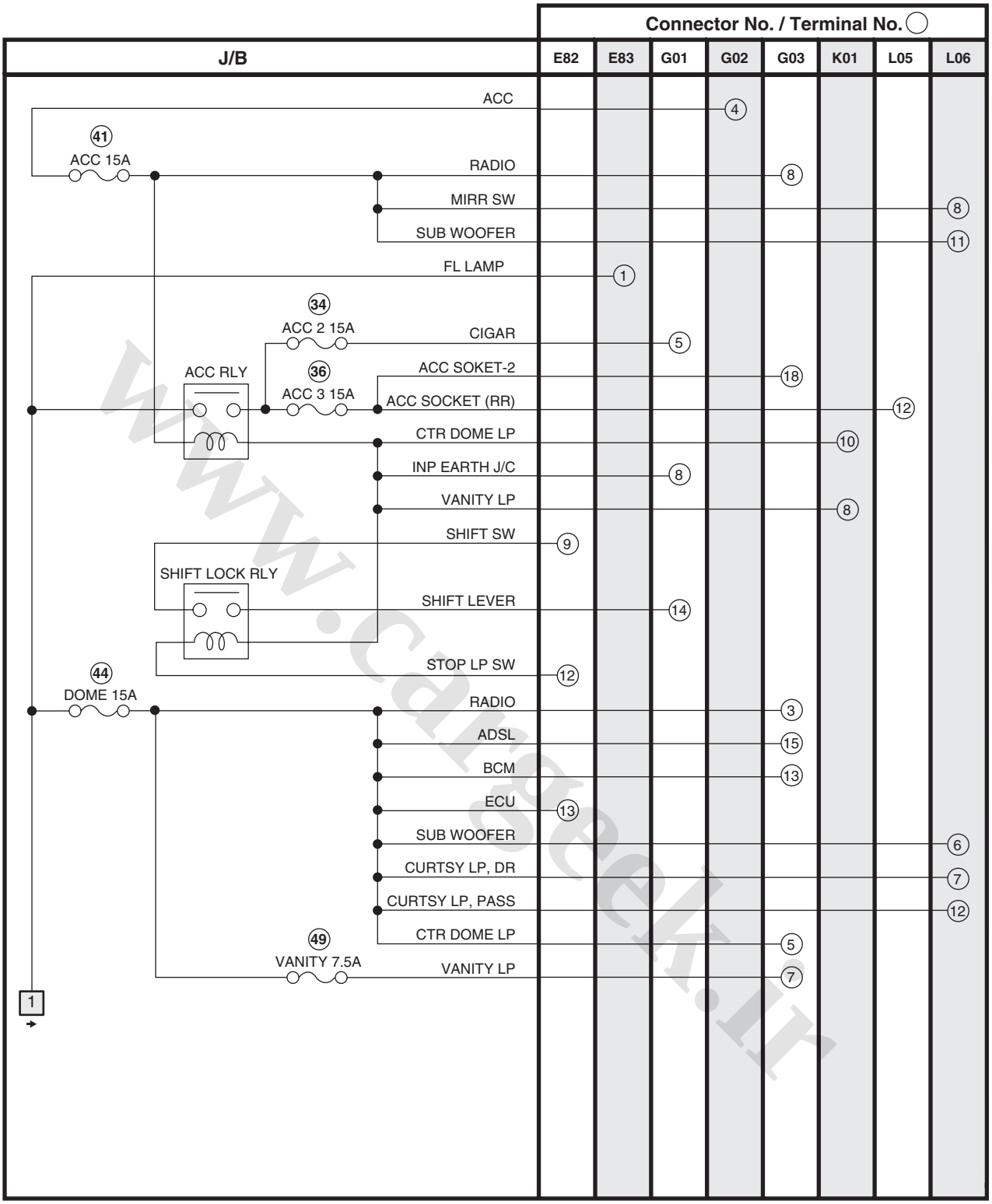


(Continued)

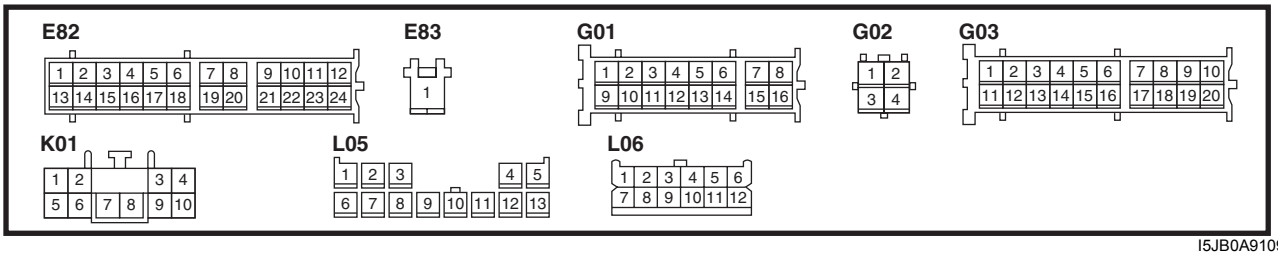


I5JB0A910993-02

www.CarGeek.ir

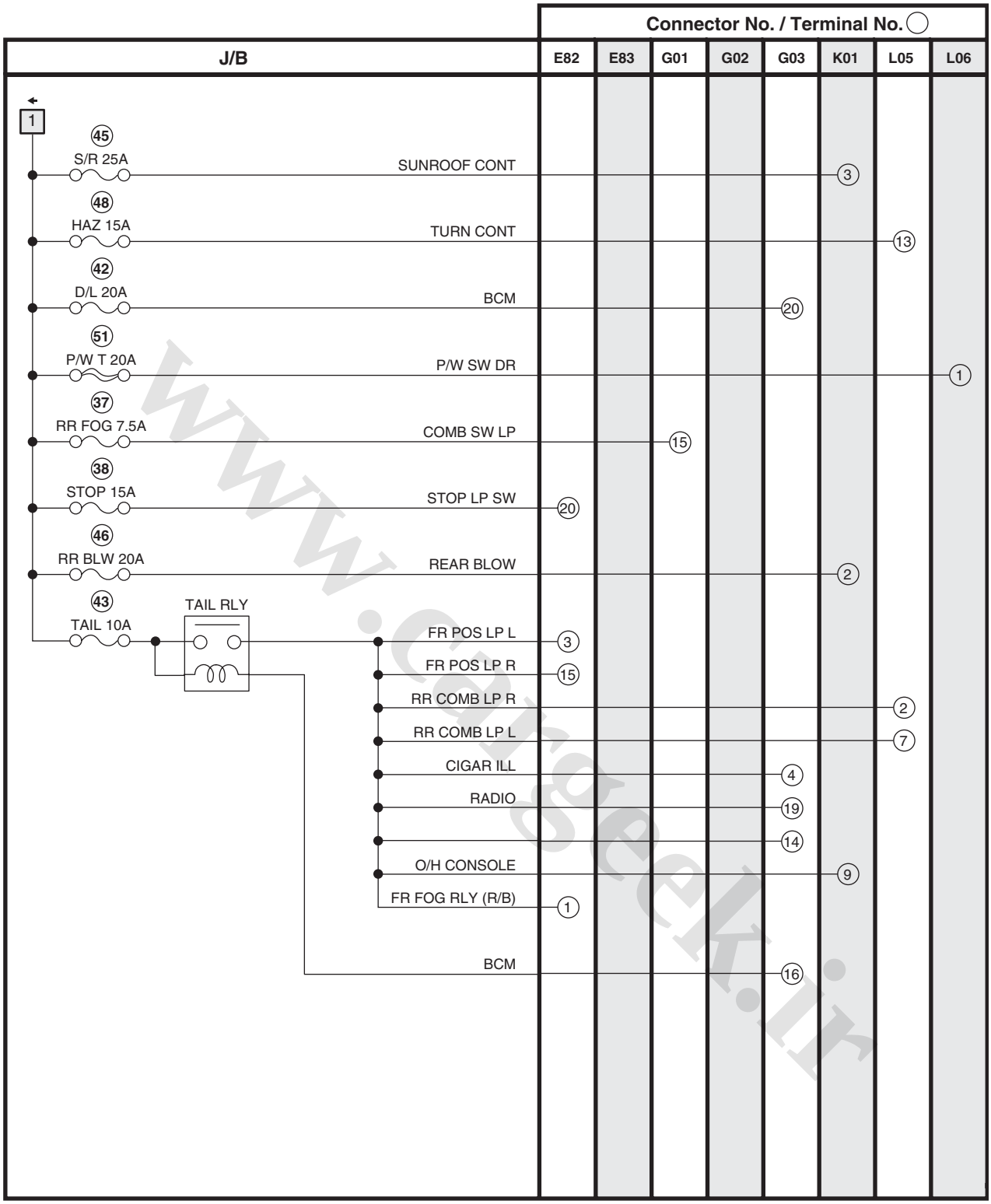


(Continued)

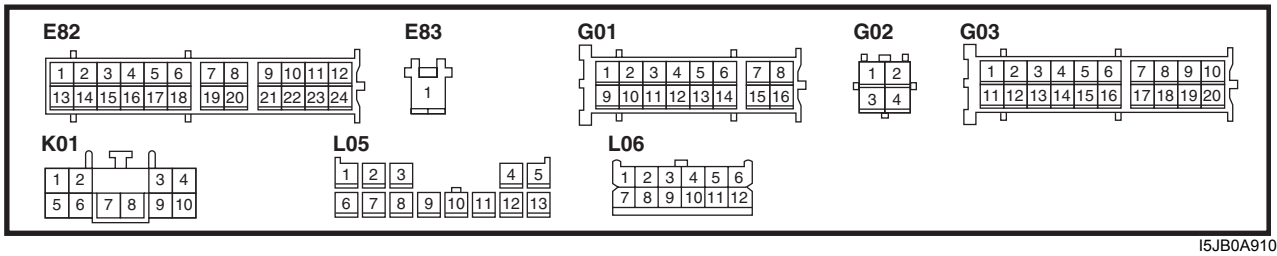


I5JB0A910994-02

www.cargeek.ir

www.CarGeek.ir


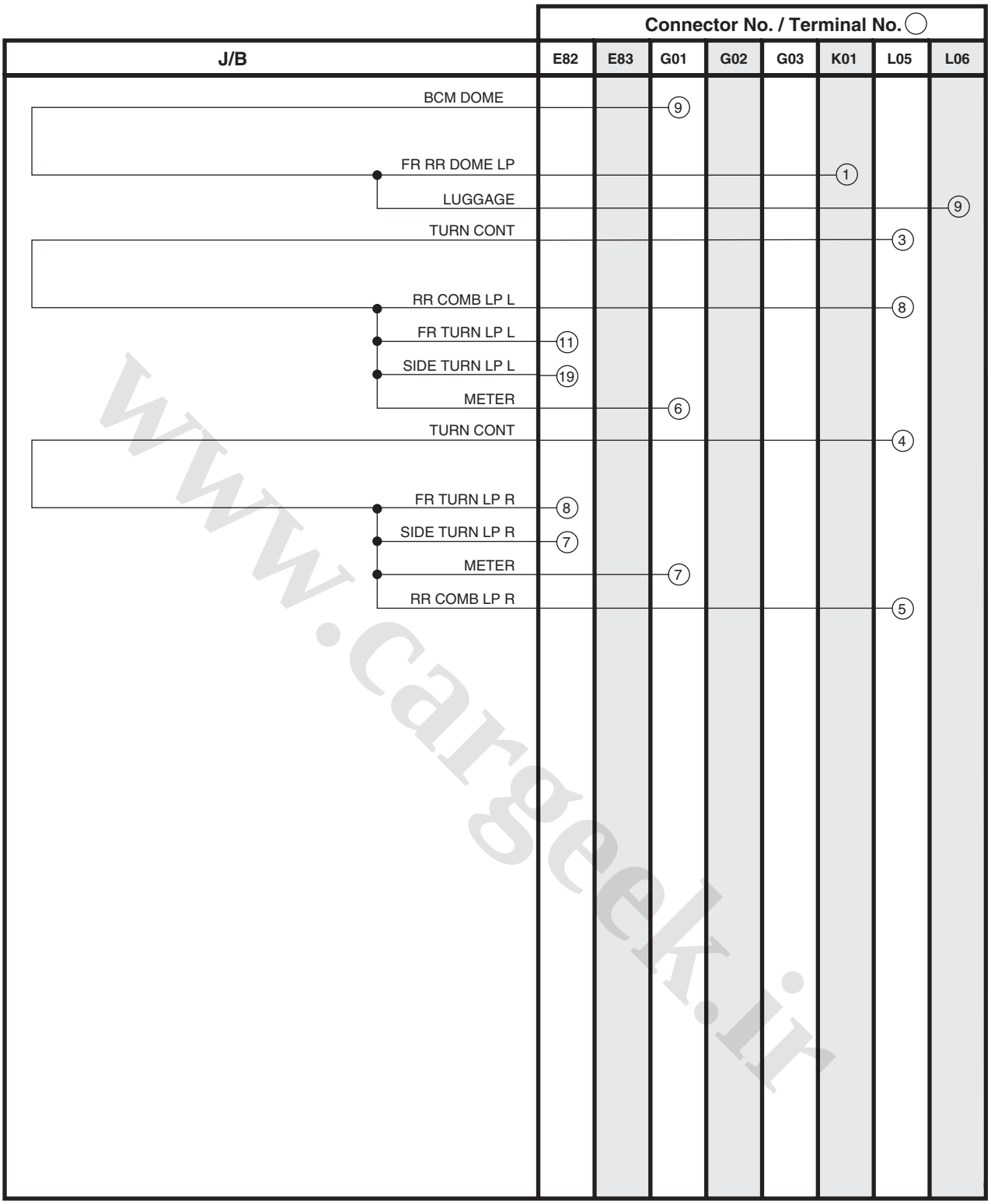


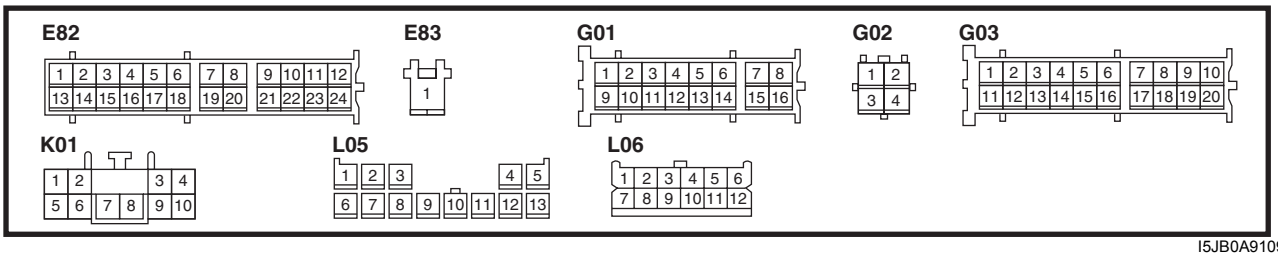


I5JB0A910995-01

www.cargeek.ir

www.CarGeek.ir

# System Circuit Diagram

## System Circuit Diagram

S5JB0A910E033

Refer to “A-1 Cranking System Circuit Diagram: ”.
Refer to “A-2 Charging System Circuit Diagram: ”.
Refer to “A-3 Ignition System Circuit Diagram (M16A): ”.
Refer to “A-3 Ignition System Circuit Diagram (J20A): ”.
Refer to “A-4 Cooling System Circuit Diagram: ”.
Refer to “A-5 Engine and A/C Control System Circuit Diagram (M16A): ”.
Refer to “A-5 Engine and A/C Control System Circuit Diagram (J20A): ”.
Refer to “A-6 A/T Control System Circuit Diagram: ”.
Refer to “A-7 Immobilizer System Circuit Diagram: ”.
Refer to “A-8 Body Control System Circuit Diagram: ”.
Refer to “A-10 4WD Control System Circuit Diagram: ”
Refer to “B-1 Windshield Wiper and Washer Circuit Diagram: ”.
Refer to “B-2 Rear Wiper and Washer Circuit Diagram: ”.
Refer to “B-3 Rear Defogger Circuit Diagram: ”.
Refer to “B-4 Power Window Circuit Diagram: ”.
Refer to “B-5 Power Door Lock Circuit Diagram: ”.
Refer to “B-6 Power Mirror Circuit Diagram: ”.
Refer to “B-7 Horn Circuit Diagram: ”.
Refer to “B-8 Seat Heater Circuit Diagram: ”
Refer to “B-9 Smart Key System Circuit Diagram: ”
Refer to “B-10 Sliding Roof Circuit Diagram: ”
Refer to “B-11 Headlight Cleaner Circuit Diagram: ”
Refer to “C-1 Combination Meter Circuit Diagram: ”.
Refer to “D-1 Headlight System Circuit Diagram (One bulb type): ”.
Refer to “D-1 Headlight System Circuit Diagram (With Projector light): ”.
Refer to “D-1 Headlight System Circuit Diagram (With Discharge bulb): ”.
Refer to “D-2 Position, Tail and Licence Plate Light System Circuit Diagram: ”.
Refer to “D-3 Front Fog Light System Circuit Diagram: ”.
Refer to “D-4 Illumination Light System Circuit Diagram: ”.
Refer to “D-5 Interior Light System Circuit Diagram: ”.
Refer to “D-6 Turn Signal and Hazard Warning Light System Circuit Diagram: ”.
Refer to “D-7 Brake Light System Circuit Diagram: ”.
Refer to “D-8 Back-Up Light System Circuit Diagram: ”.
Refer to “D-9 Headlight Beam Leveling System Circuit Diagram (Manual Leveling): ”
Refer to “D-9 Headlight Beam Leveling System Circuit Diagram (Auto Leveling): ”
Refer to “D-10 Rear Fog Light Circuit Diagram: ”
Refer to “E-2 Auto A/C System Circuit Diagram: ”
Refer to “F-1 Air-Bag System Circuit Diagram (Without side A/B and Curtain A/B): ”.
Refer to “F-1 Air-Bag System Circuit Diagram (With side A/B and Curtain A/B): ”.
Refer to “F-2 Anti-Lock Brake System Circuit Diagram: ”.
Refer to “G-1 Audio System Circuit Diagram: ”.
Refer to “G-2 Multi Information Display / Accessory Socket System Circuit Diagram: ”.
Refer to “G-4 Navigation System Circuit Diagram: ”

www.cargeek.ir

www.CarGeek.ir


## A-1 Cranking System Circuit Diagram

S5JB0A910E001

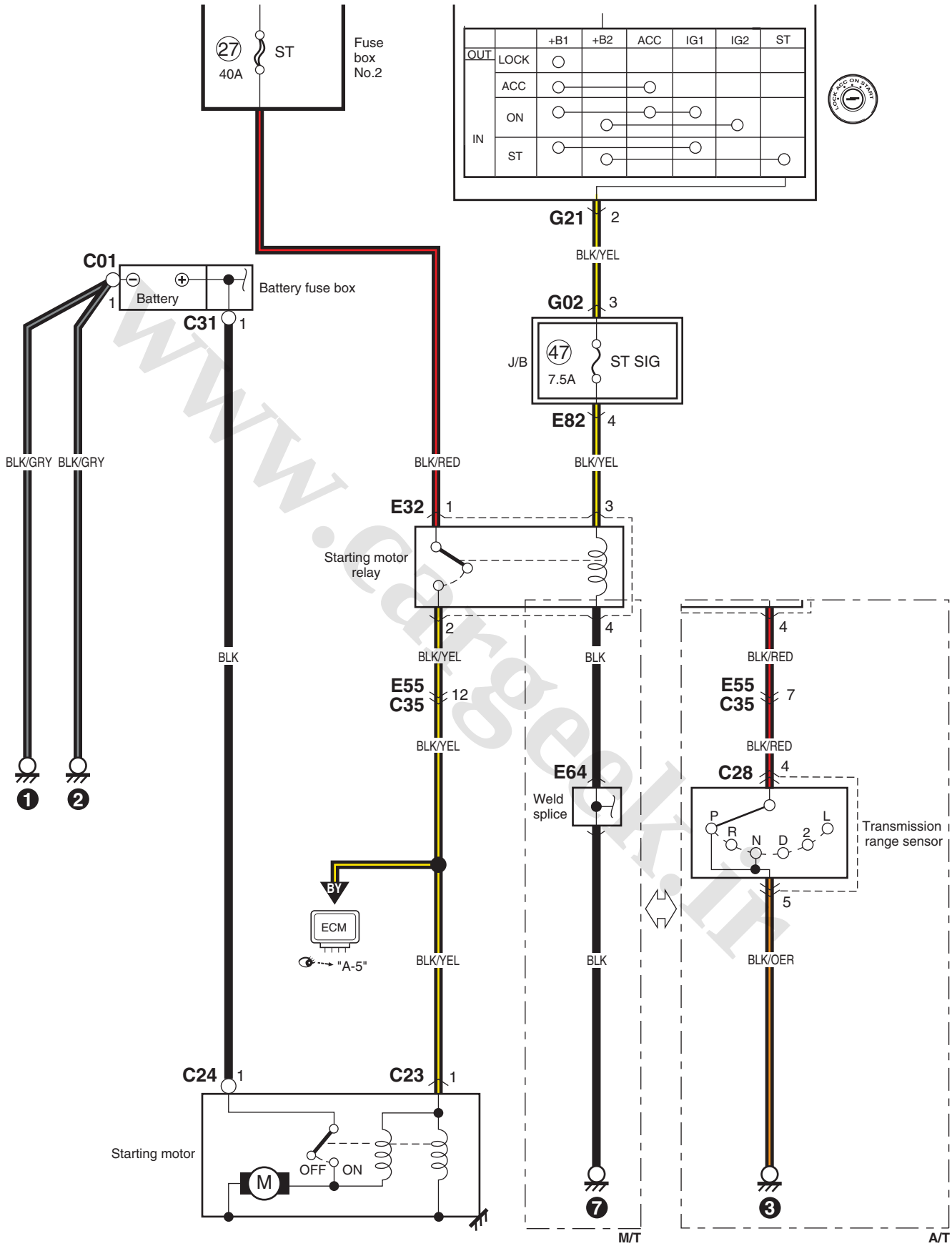


www.cargeek.ir

www.CarGeek.ir

## A-2 Charging System Circuit Diagram

S5JB0A910E002

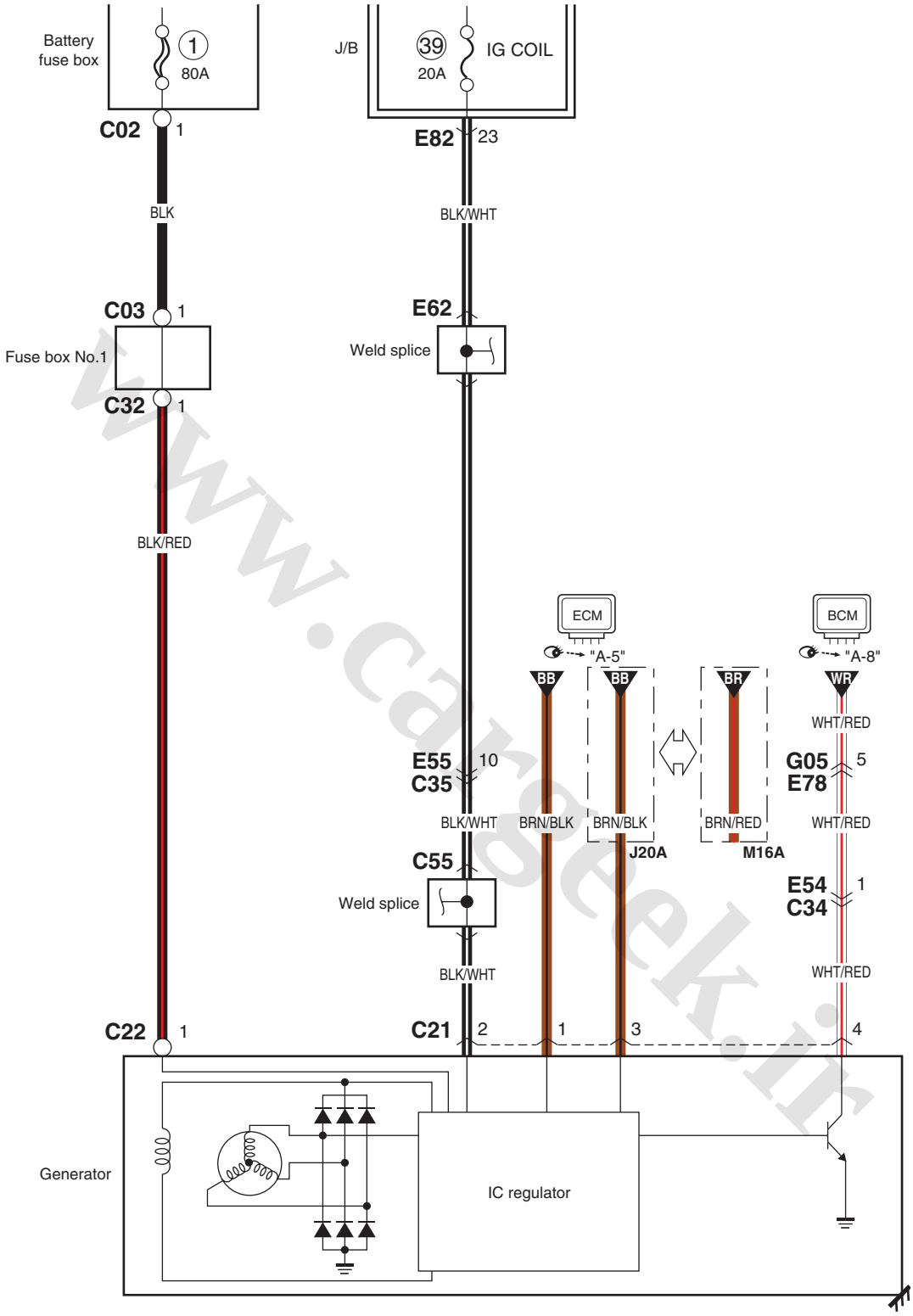


I5JB0A910930-07

www.cargeek.ir

www.CarGeek.ir


## A-3 Ignition System Circuit Diagram (M16A)

S5JB0A910E003

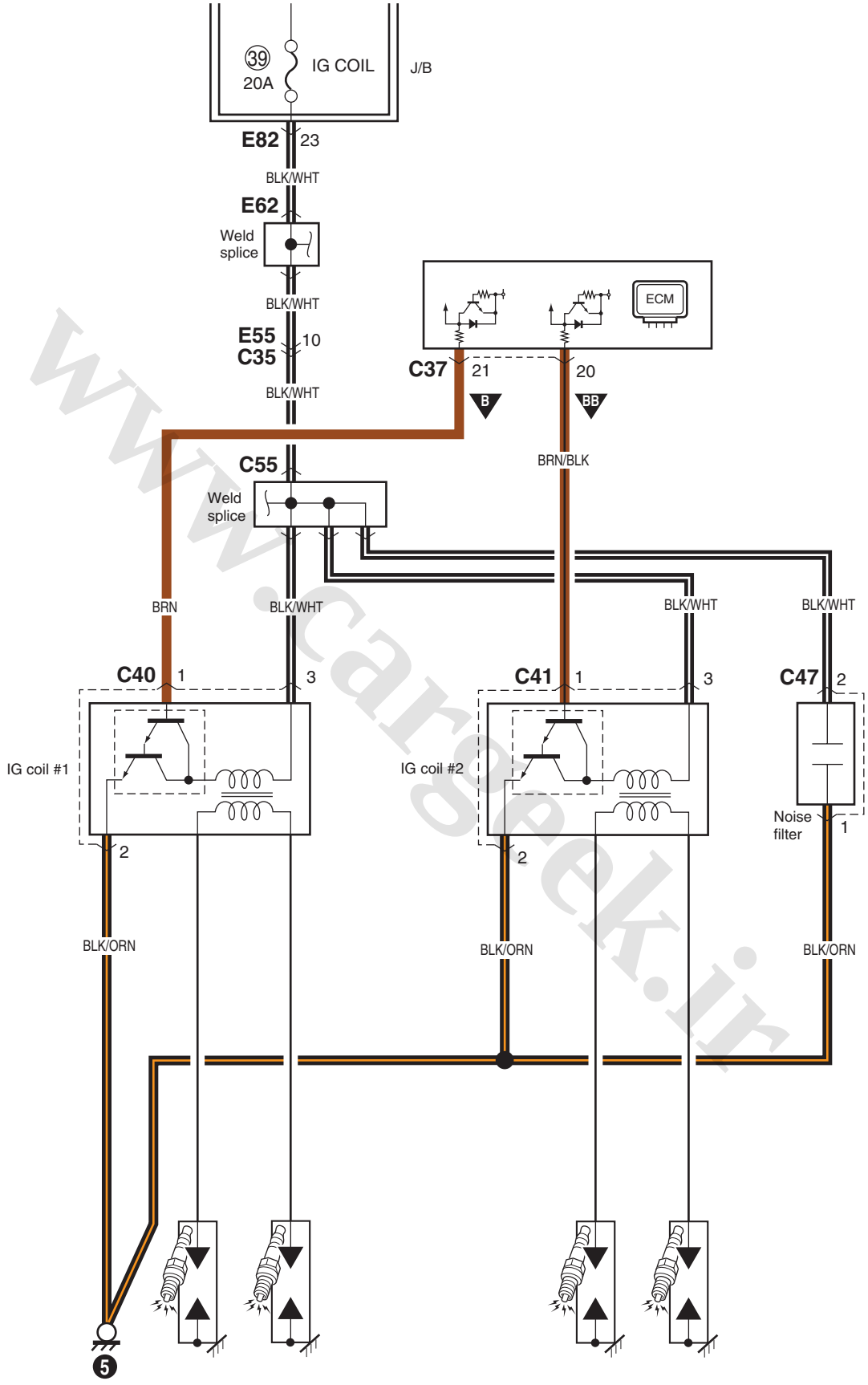


I5JB0A910931-02

www.cargeek.ir

www.CarGeek.ir

## A-3 Ignition System Circuit Diagram (J20A)

S5JB0A910E040

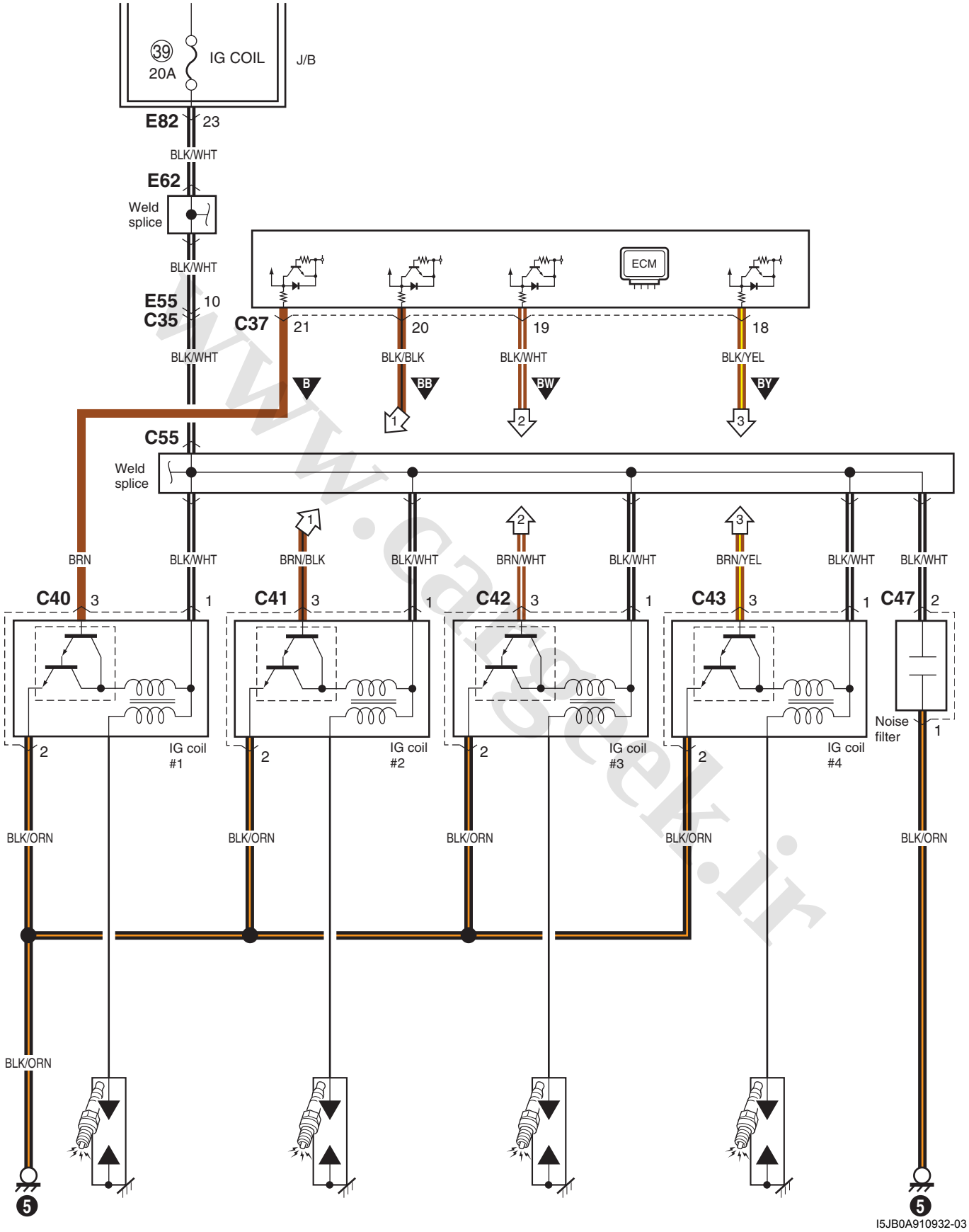


www.cargeek.ir

www.CarGeek.ir


## A-4 Cooling System Circuit Diagram

S5JB0A910E004

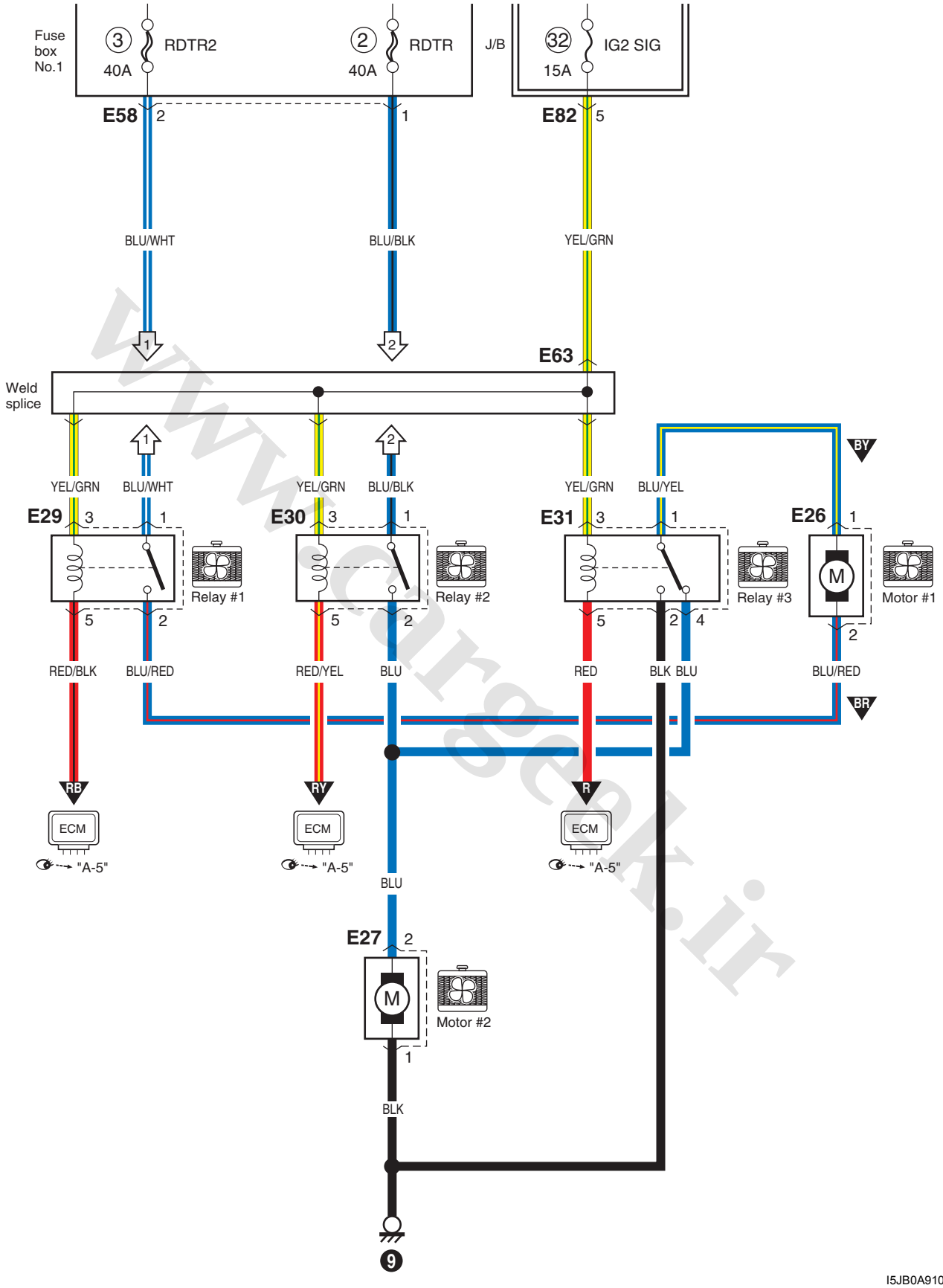


I5JB0A910933-08

www.cargeek.ir

www.CarGeek.ir

## A-5 Engine and A/C Control System Circuit Diagram (M16A)

S5JB0A910E005

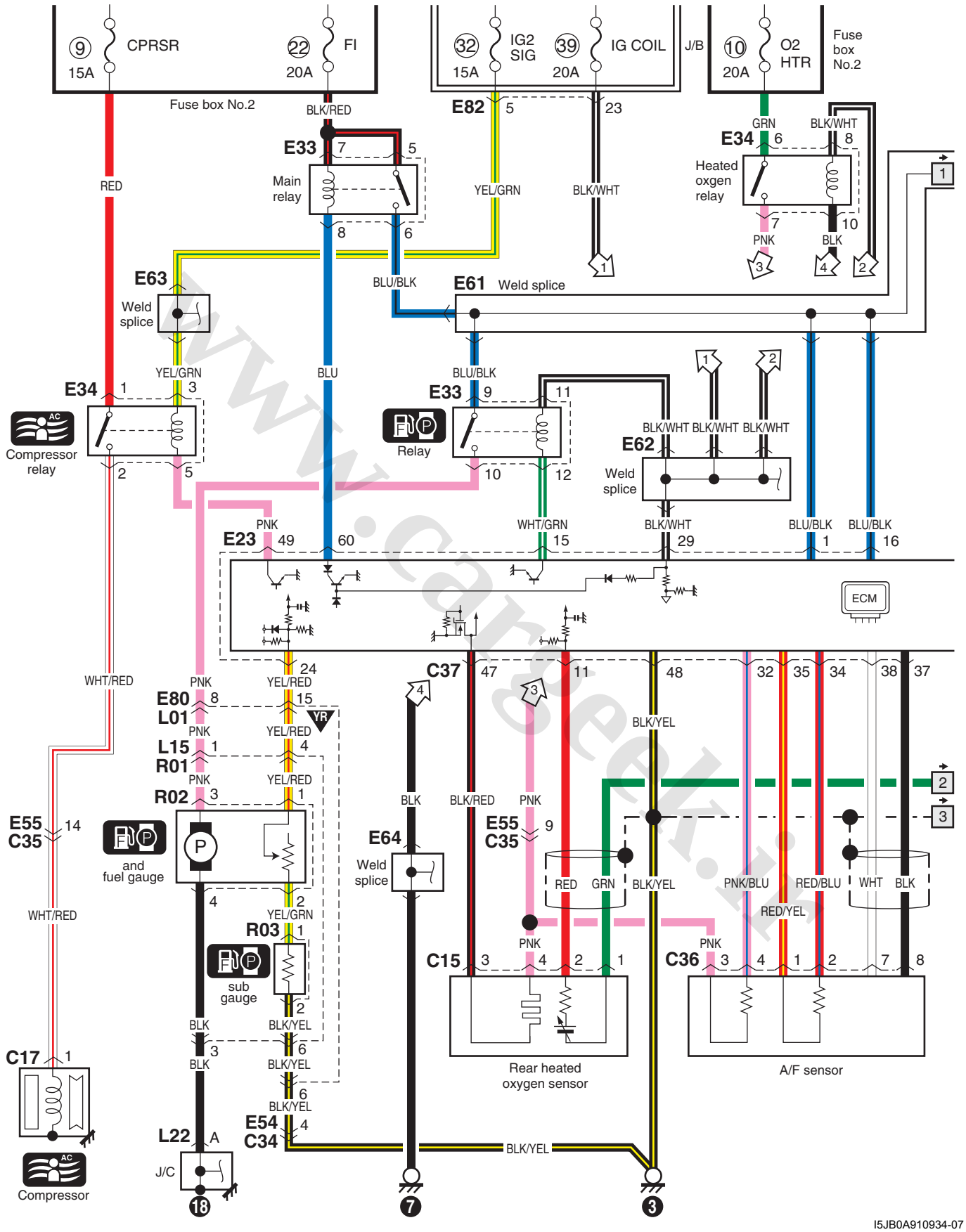


I5JB0A910934-07

www.cargeek.ir

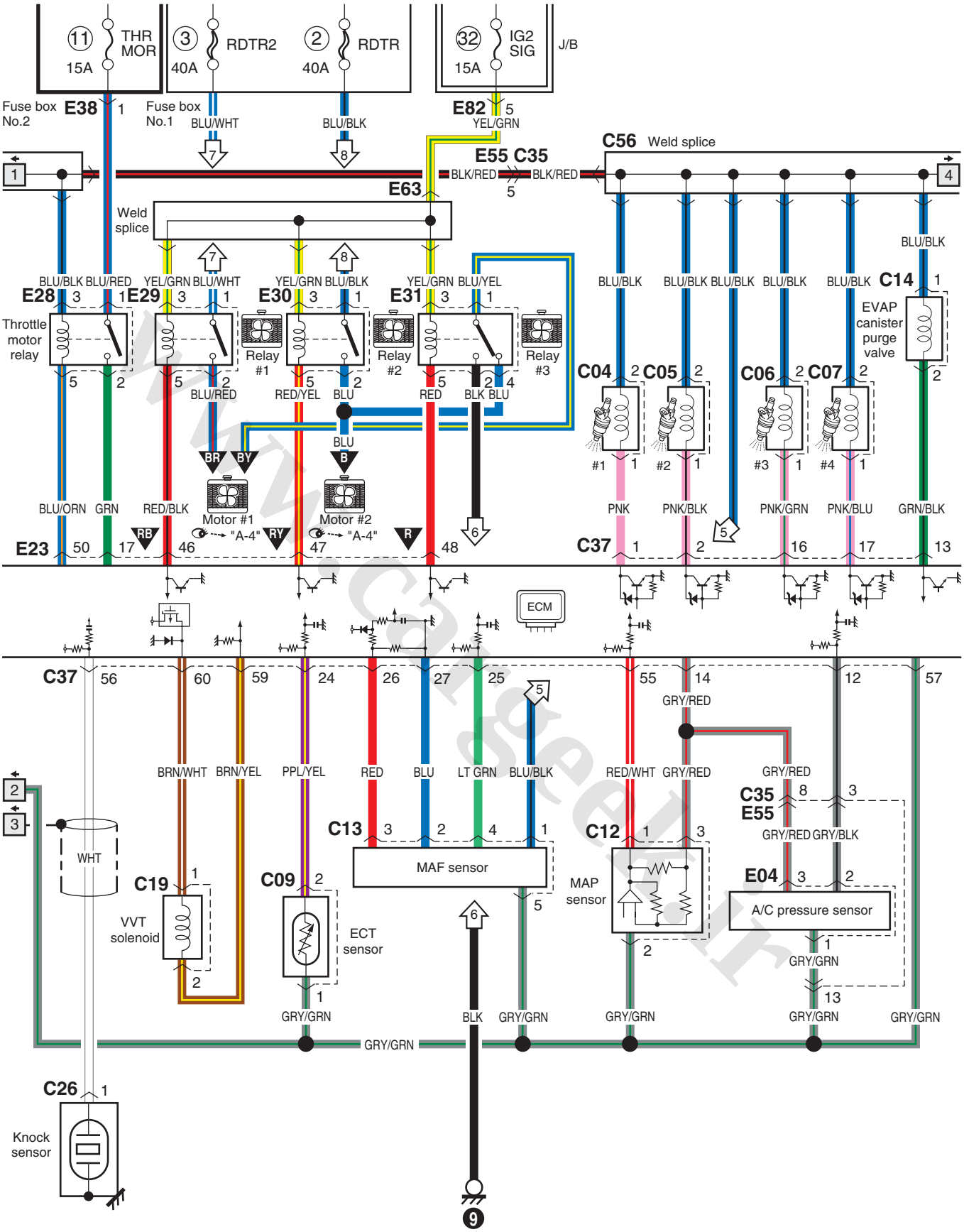
11 THR MOR 15A
3 RDTR2 40A
2 RDTR 40A
32 IG2 SIG 15A
J/B
Fuse box No.2
E38
Fuse box No.1
BLU/WHT
BLU/BLK
E82
YEL/GRN
C56 Weld splice
E55 C35
BLK/RED
E63
Weld splice
BLU/BLK BLU/RED
YEL/GRN BLU/WHT
YEL/GRN BLU/BLK
YEL/GRN BLU/YEL
E28
E29
E30
E31
Throttle motor relay
Relay #1
Relay #2
Relay #3
BLU/RED
RED/YEL
BLU
RED
BLK BLU
BLU/BLK
C14
EVAP canister purge valve
C04
C05
C06
C07
#1
#2
#3
#4
BLU/ORN
GRN
RED/BLK
Motor #1
Motor #2
"A-4"
PNK
PNK/BLK
PNK/GRN
PNK/BLU
GRN/BLK
E23
C37
ECM
BRN/WHT
BRN/YEL
PPL/YEL
RED
BLU
LT GRN
BLU/BLK
RED/WHT
GRY/RED
C35
E55
GRY/RED GRY/BLK
WHT
C19
VVT solenoid
C09
ECT sensor
C13
MAF sensor
C12
MAP sensor
E04
A/C pressure sensor
GRY/GRN
BLK
C26
Knock sensor
I5JB0A910935-08

www.CarGeek.ir

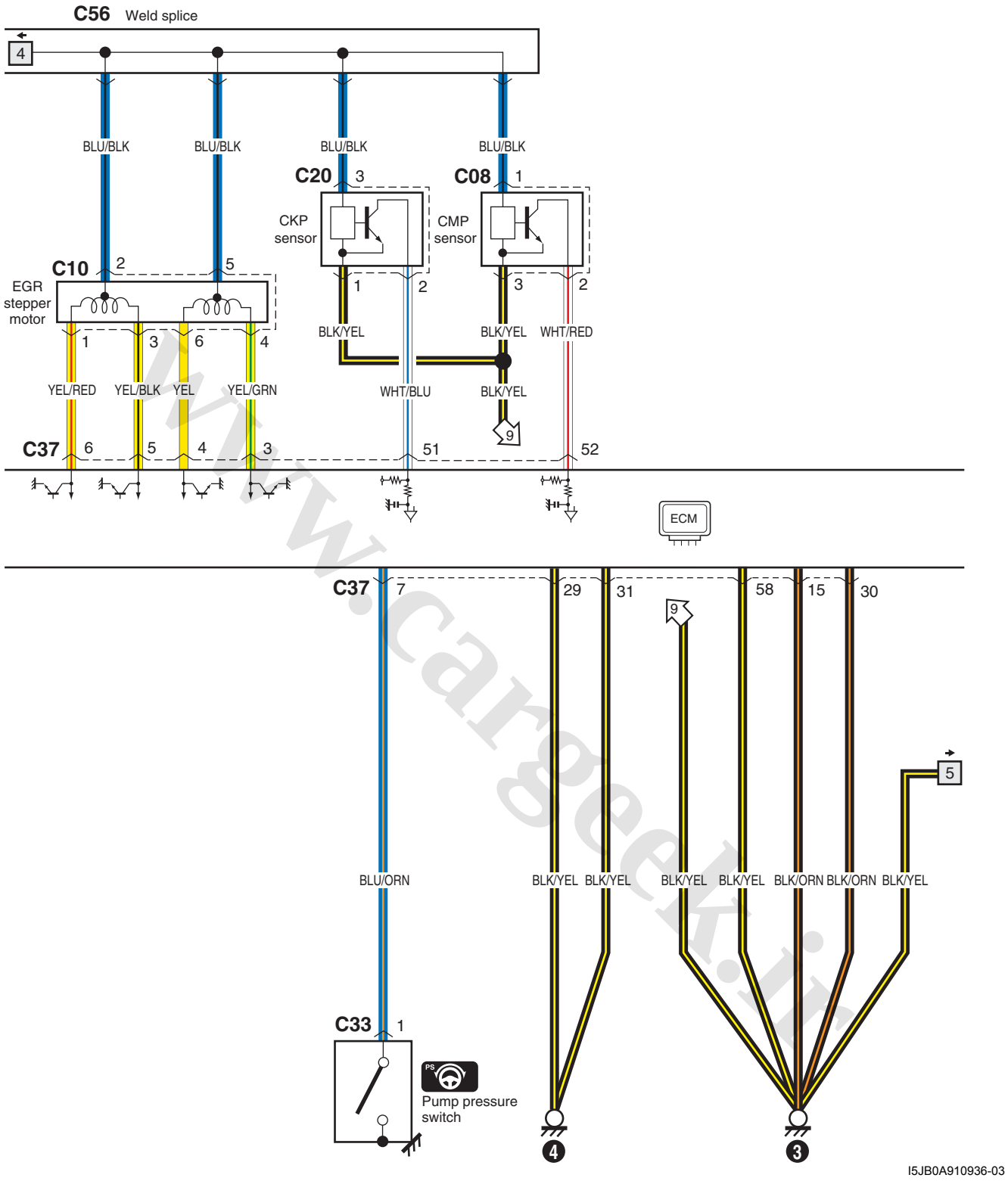


www.cargeek.ir

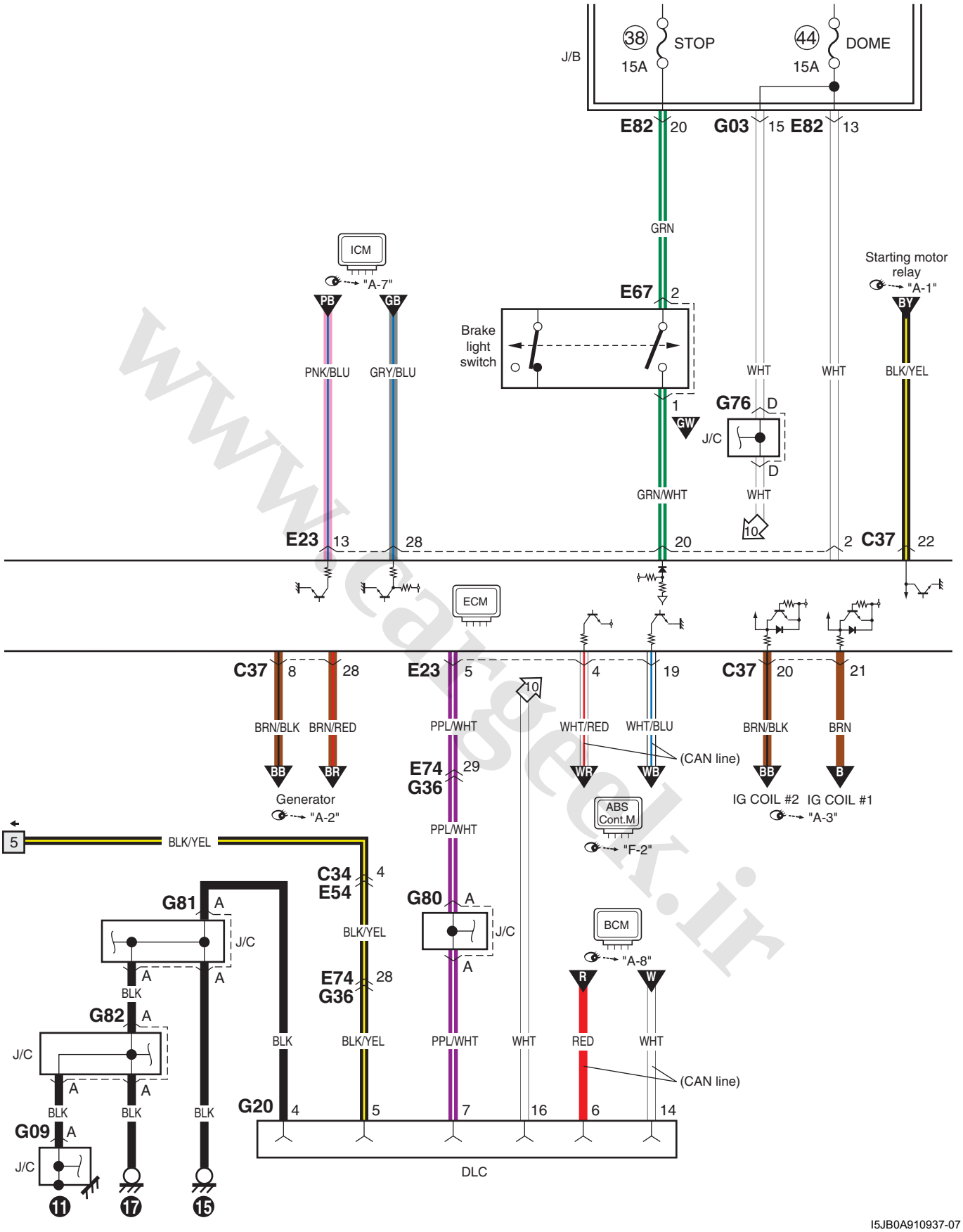


I5JB0A910937-07

www.CarGeek.ir

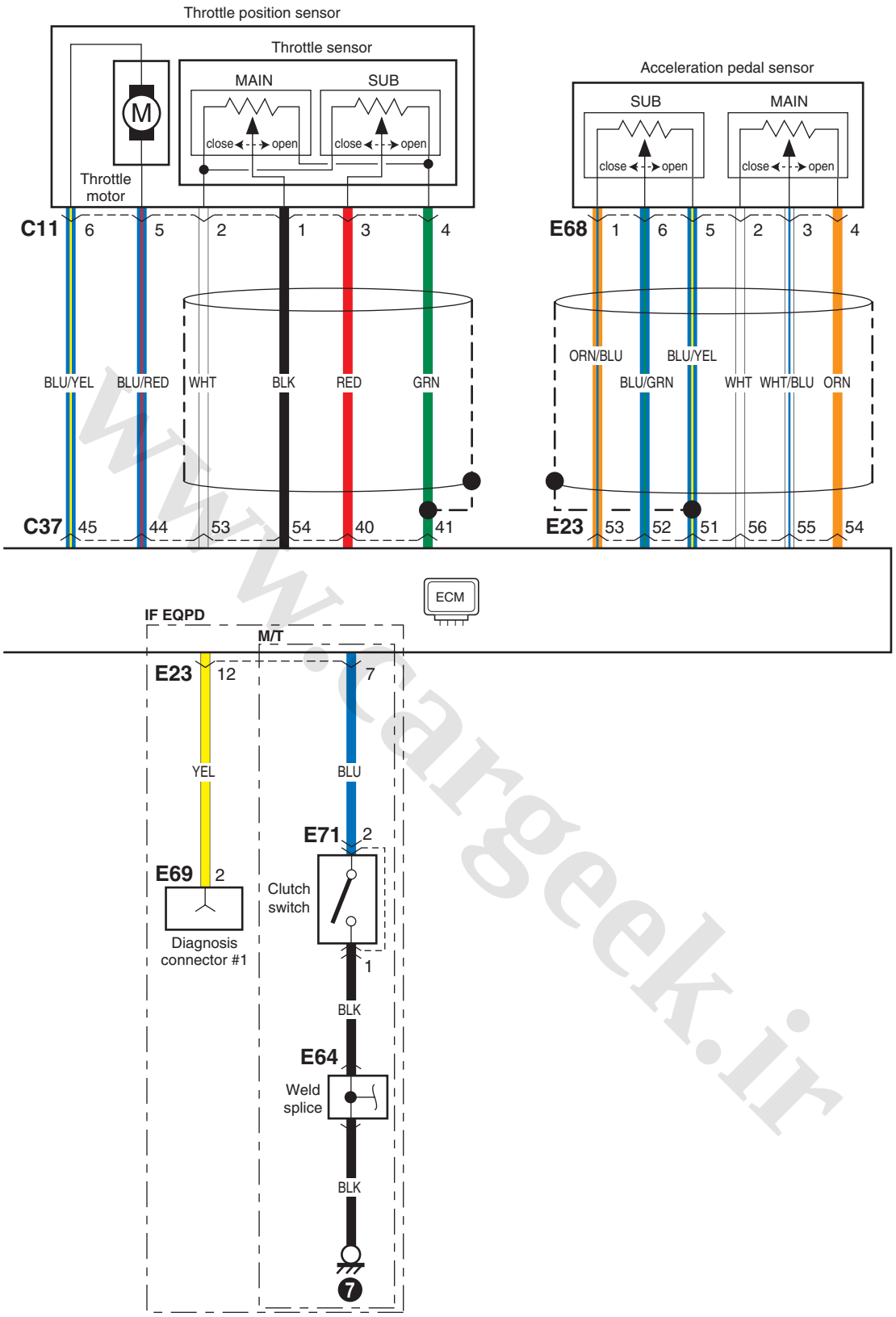


I5JB0A910938-03

www.cargeek.ir

www.CarGeek.ir


## A-5 Engine and A/C Control System Circuit Diagram (J20A)

S5JB0A910E041

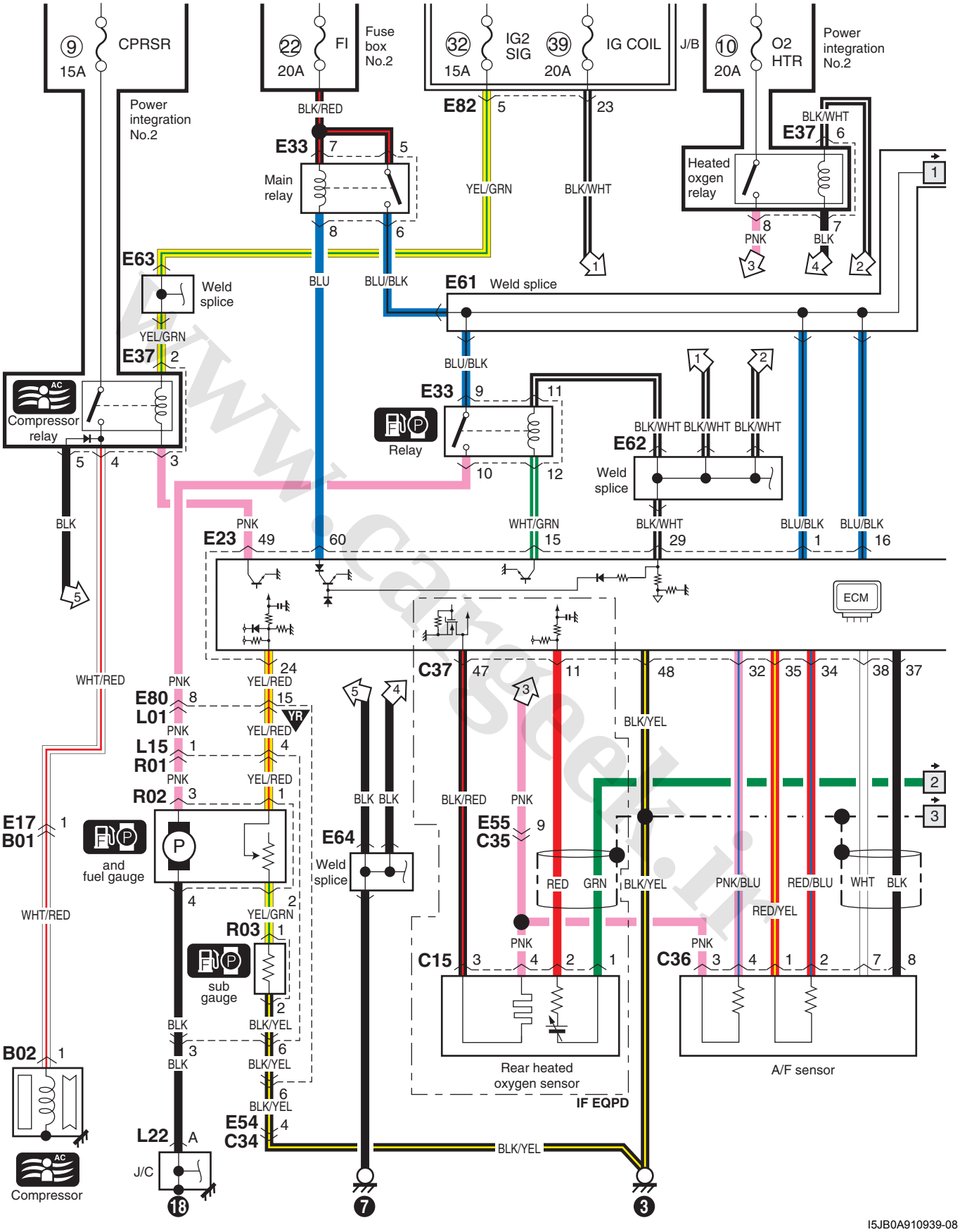


I5JB0A910939-08

www.cargeek.ir

www.CarGeek.ir

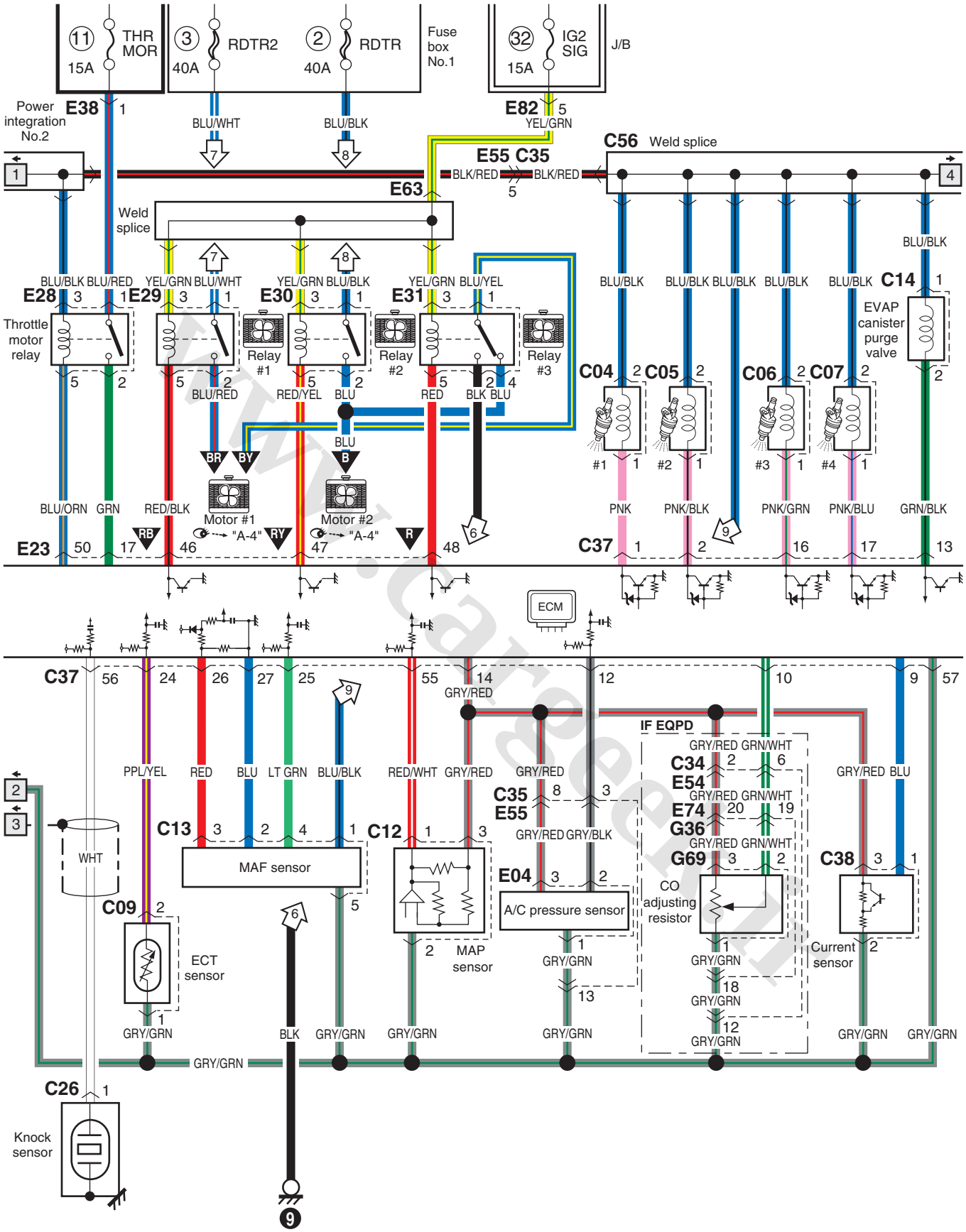


www.cargeek.ir

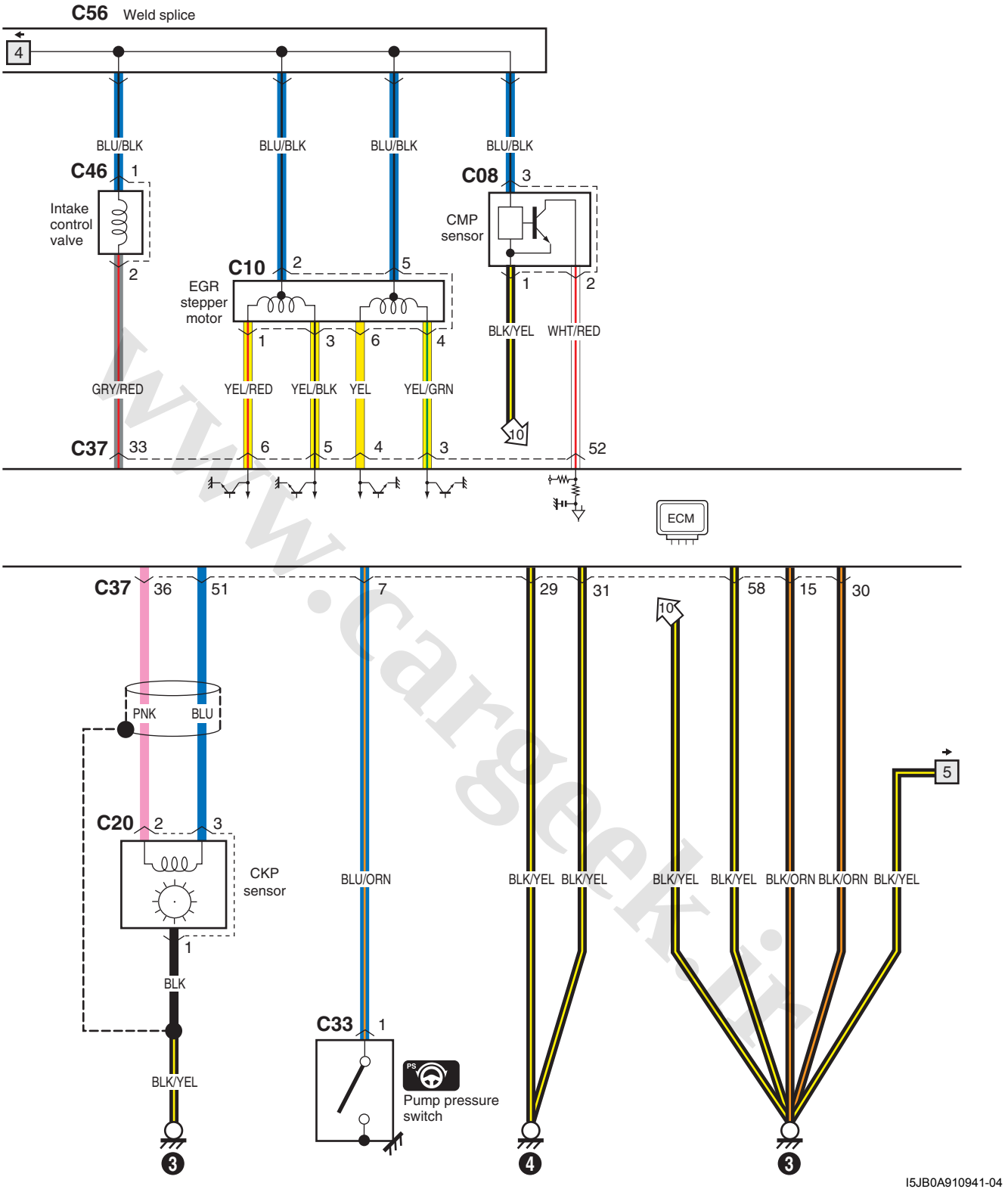


www.cargeek.ir

www.CarGeek.ir

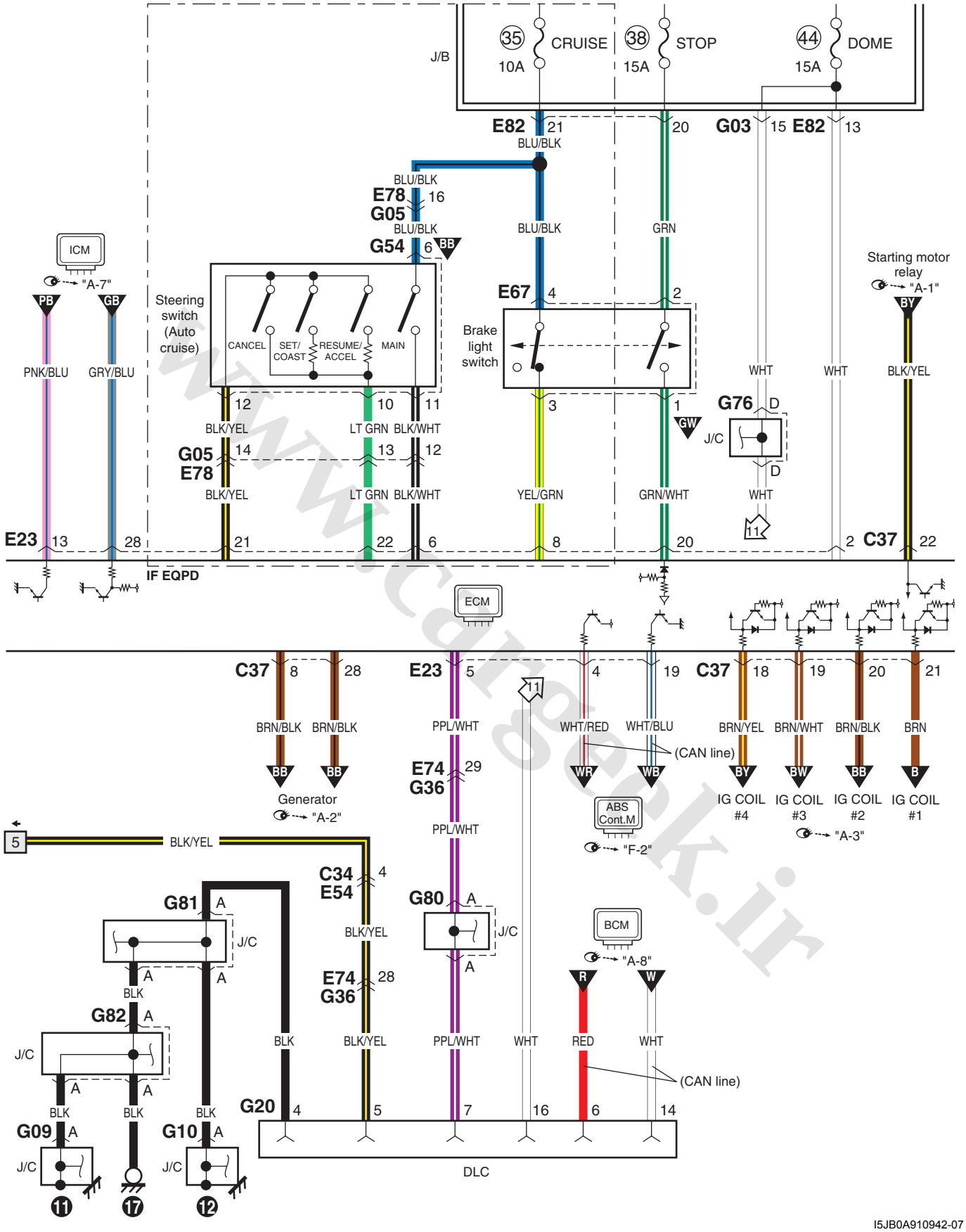


www.cargeek.ir

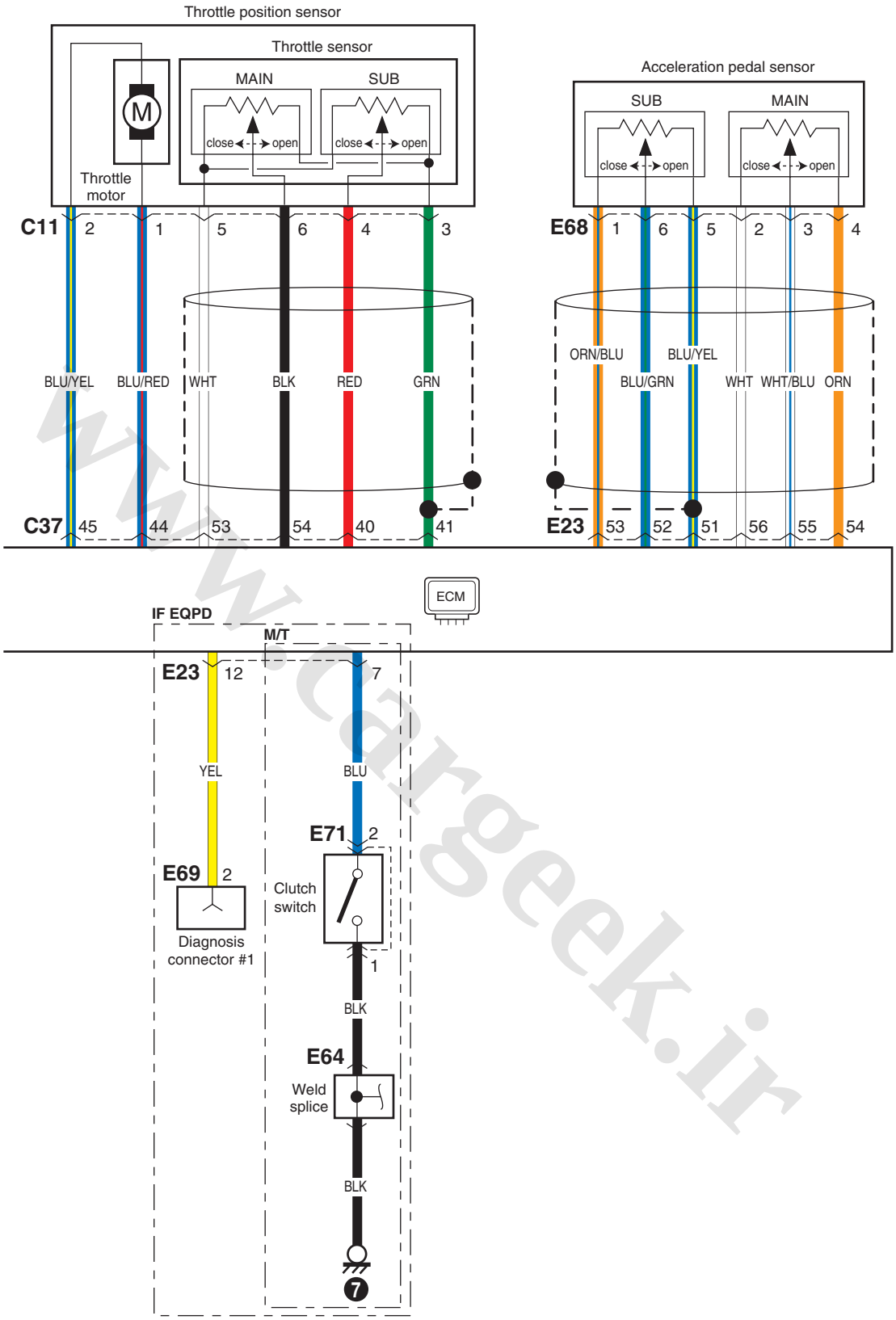


I5JB0A910943-03

www.cargeek.ir

www.CarGeek.ir

## A-6 A/T Control System Circuit Diagram

S5JB0A910E006

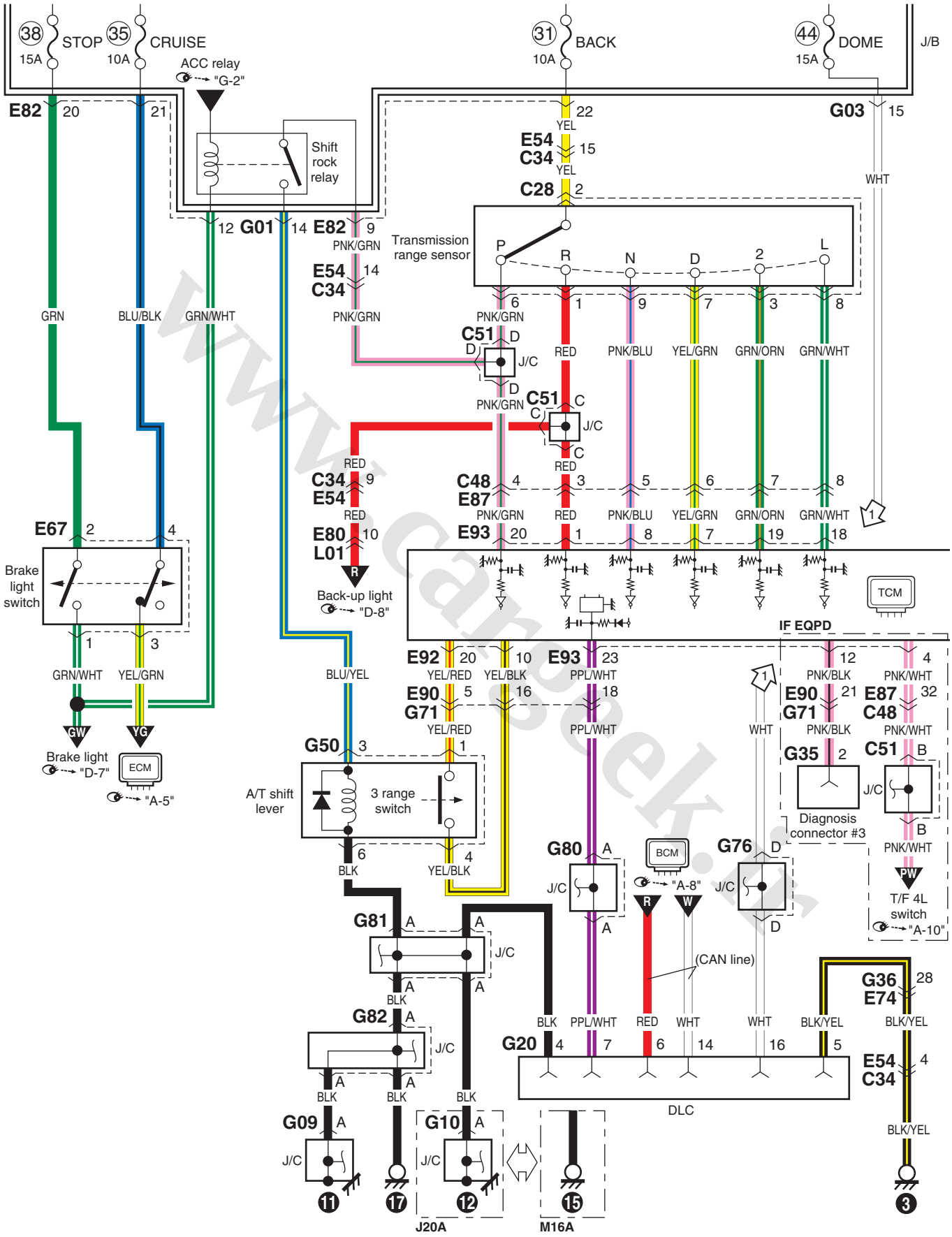


I5JB0A910944-09

www.cargeek.ir

www.CarGeek.ir


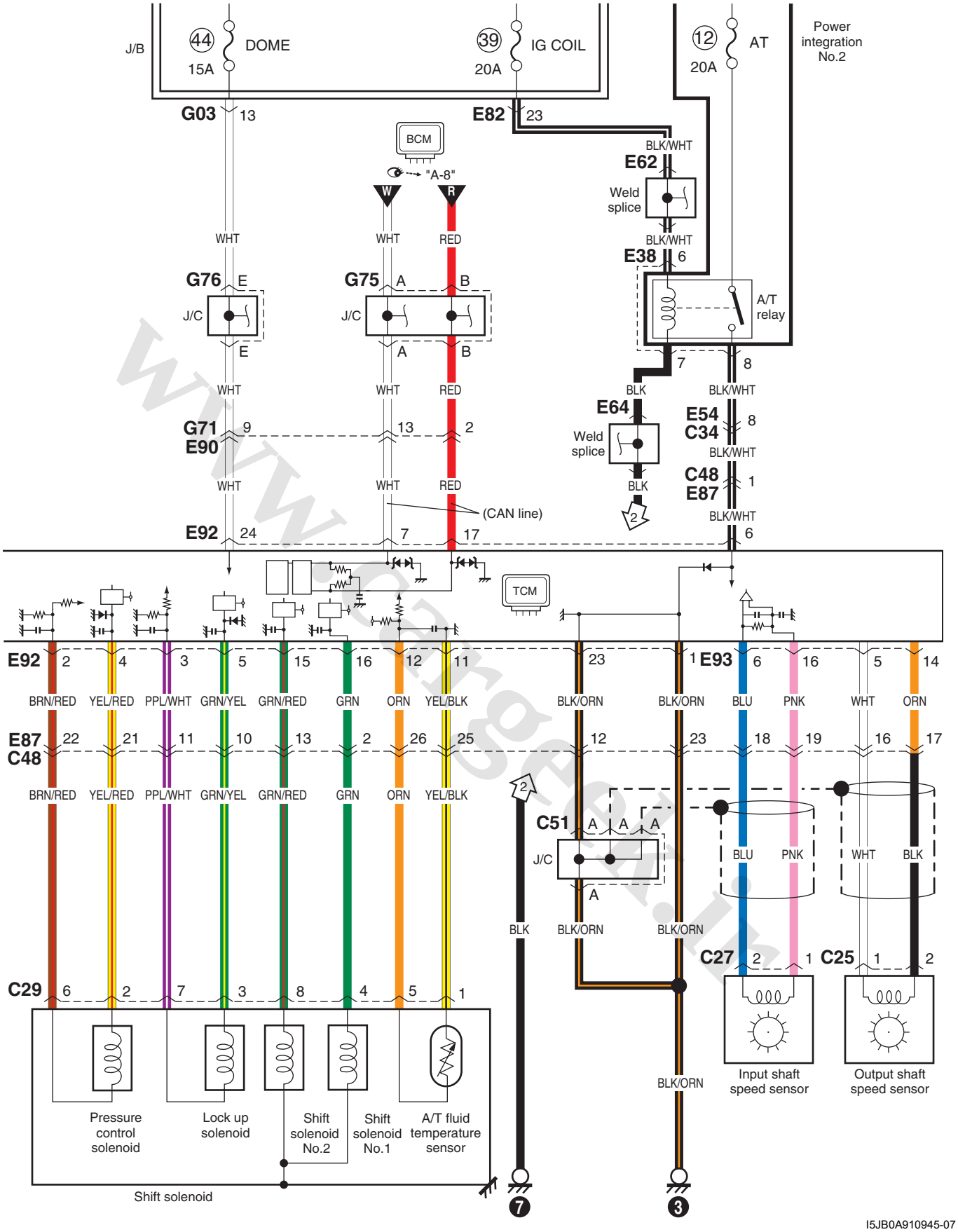


www.cargeek.ir

www.CarGeek.ir

## A-7 Immobilizer System Circuit Diagram

S5JB0A910E007

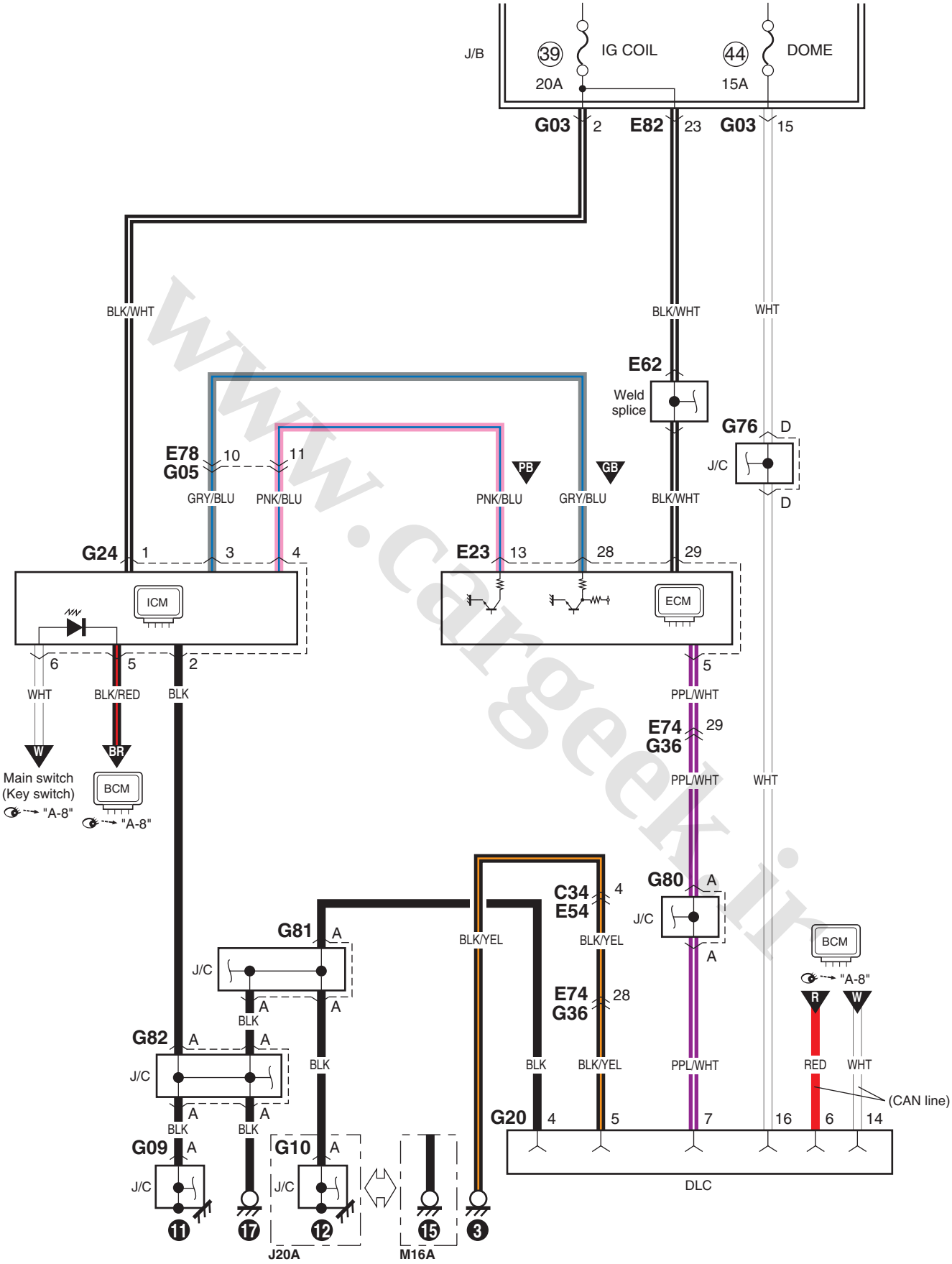


I5JB0A910946-04

www.cargeek.ir

## A-8 Body Control System Circuit Diagram

S5JB0A910E008

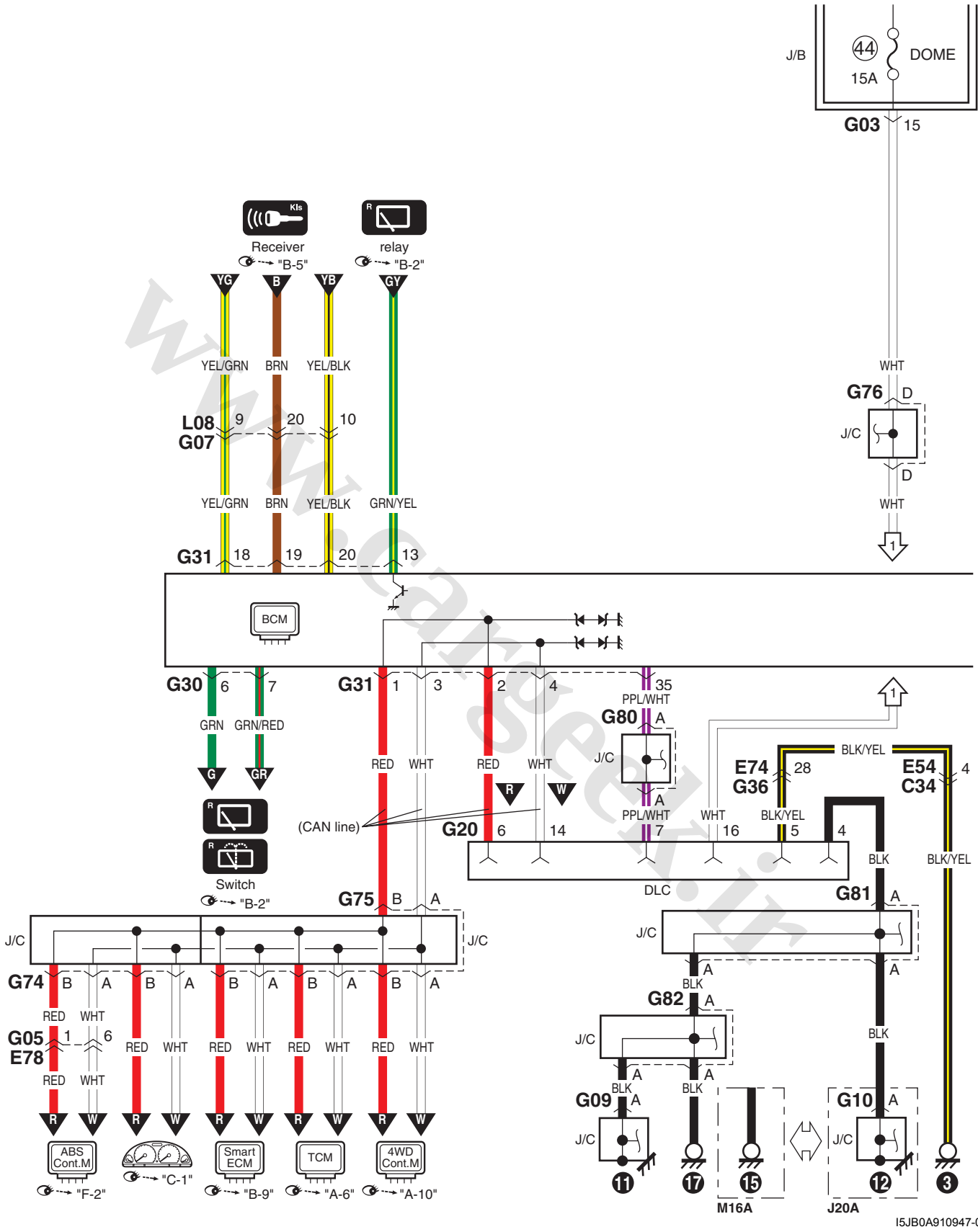

www.CarGeek.ir

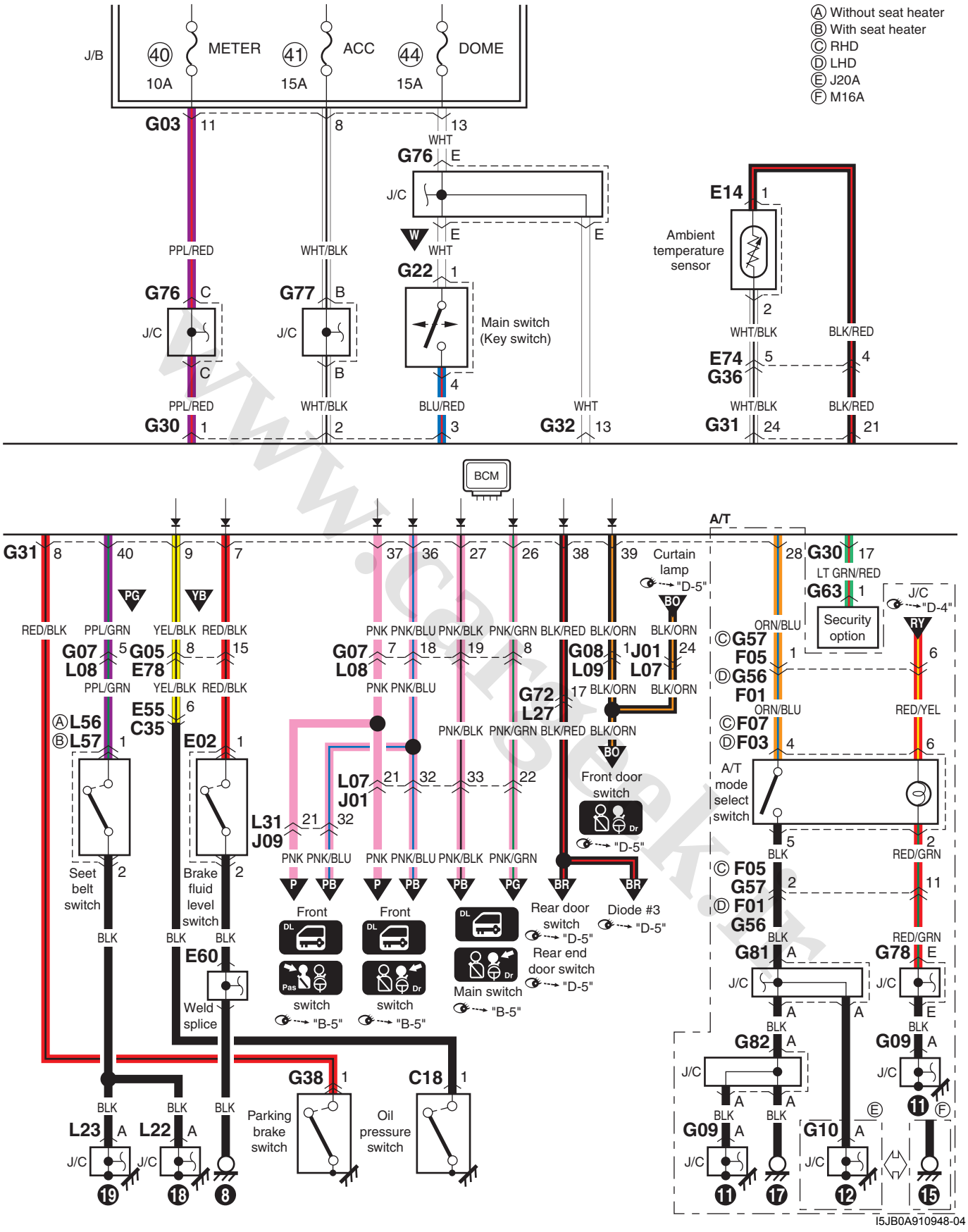


www.cargeek.ir

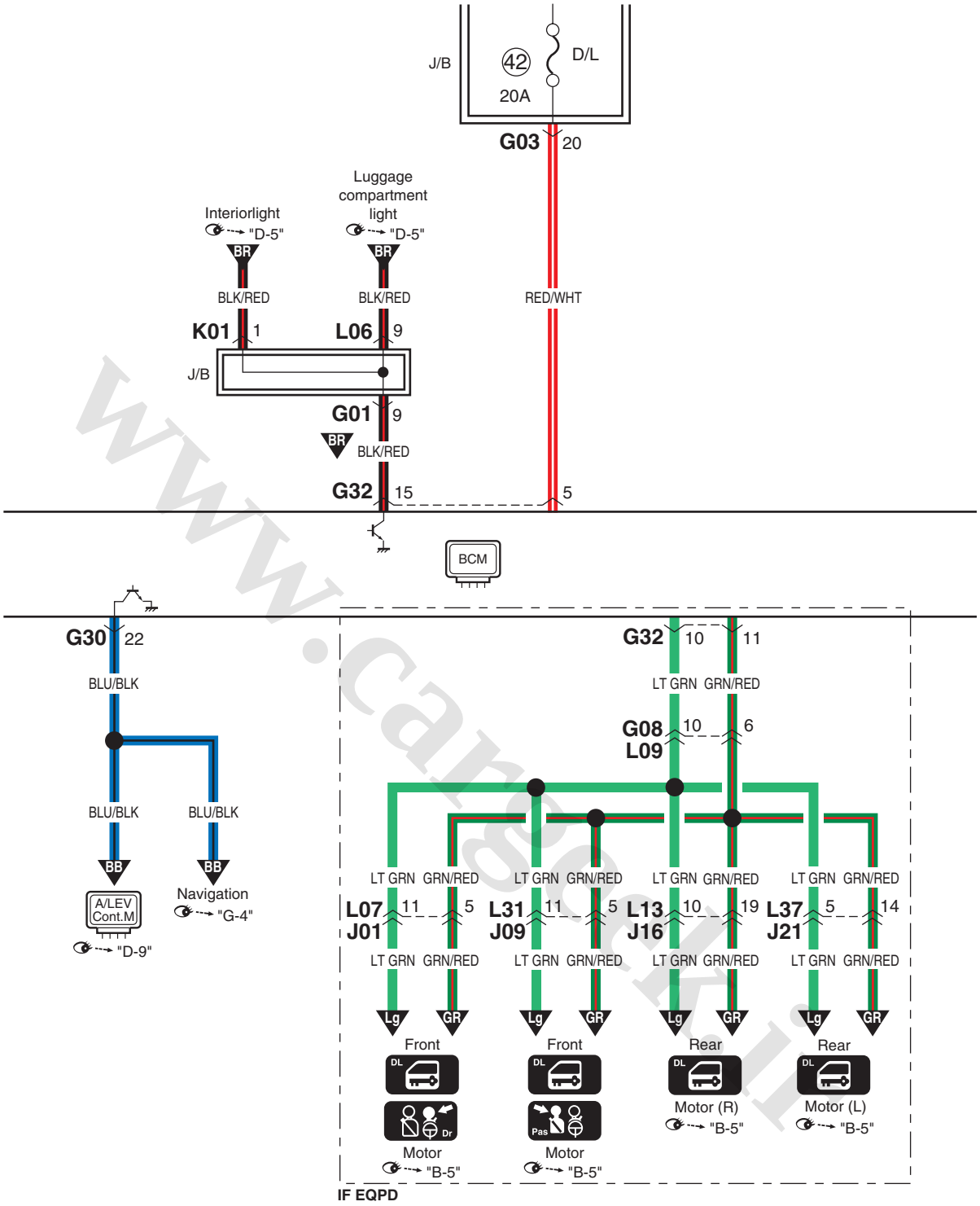


I5JB0A910949-06

www.CarGeek.ir

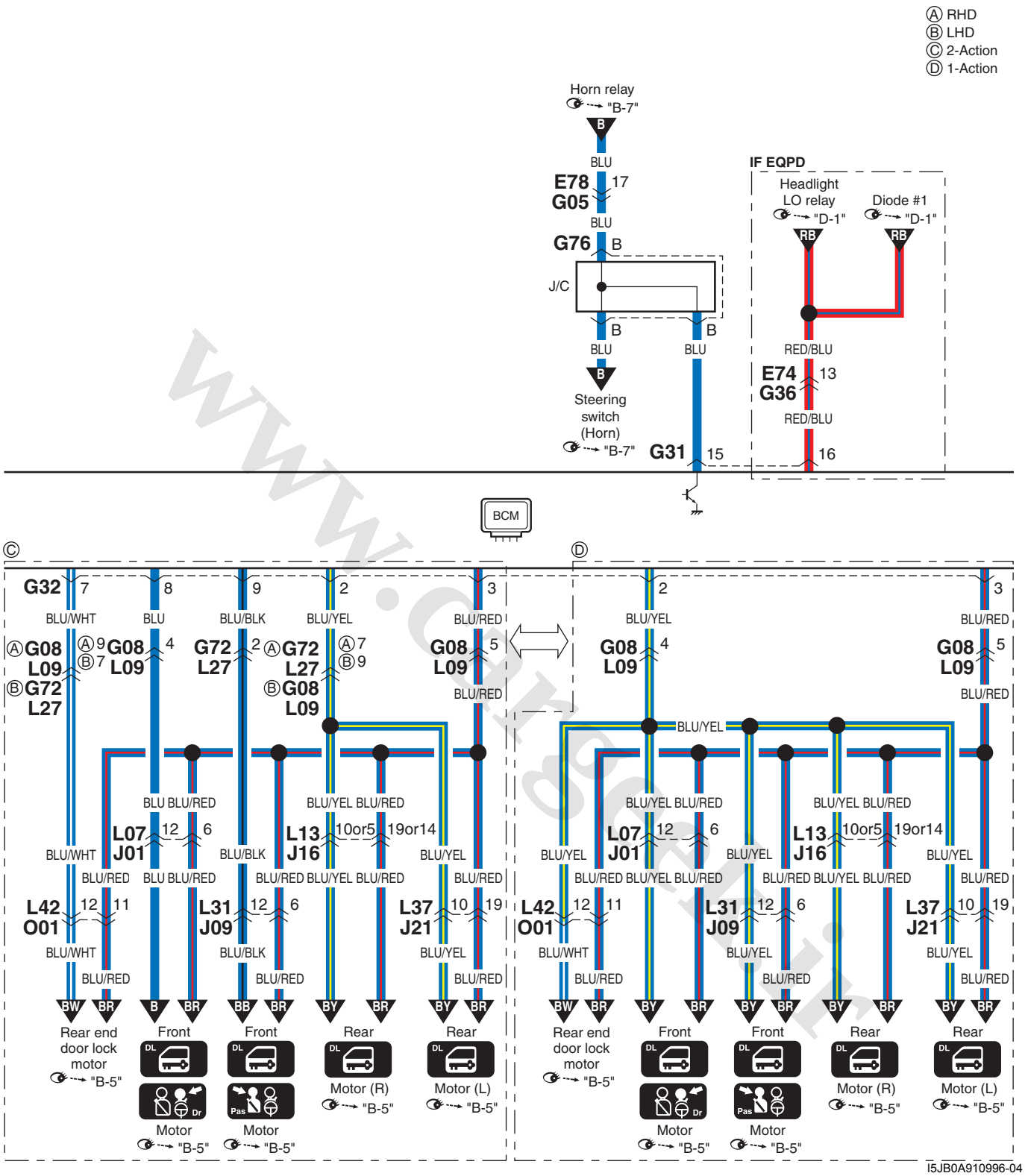


www.cargeek.ir

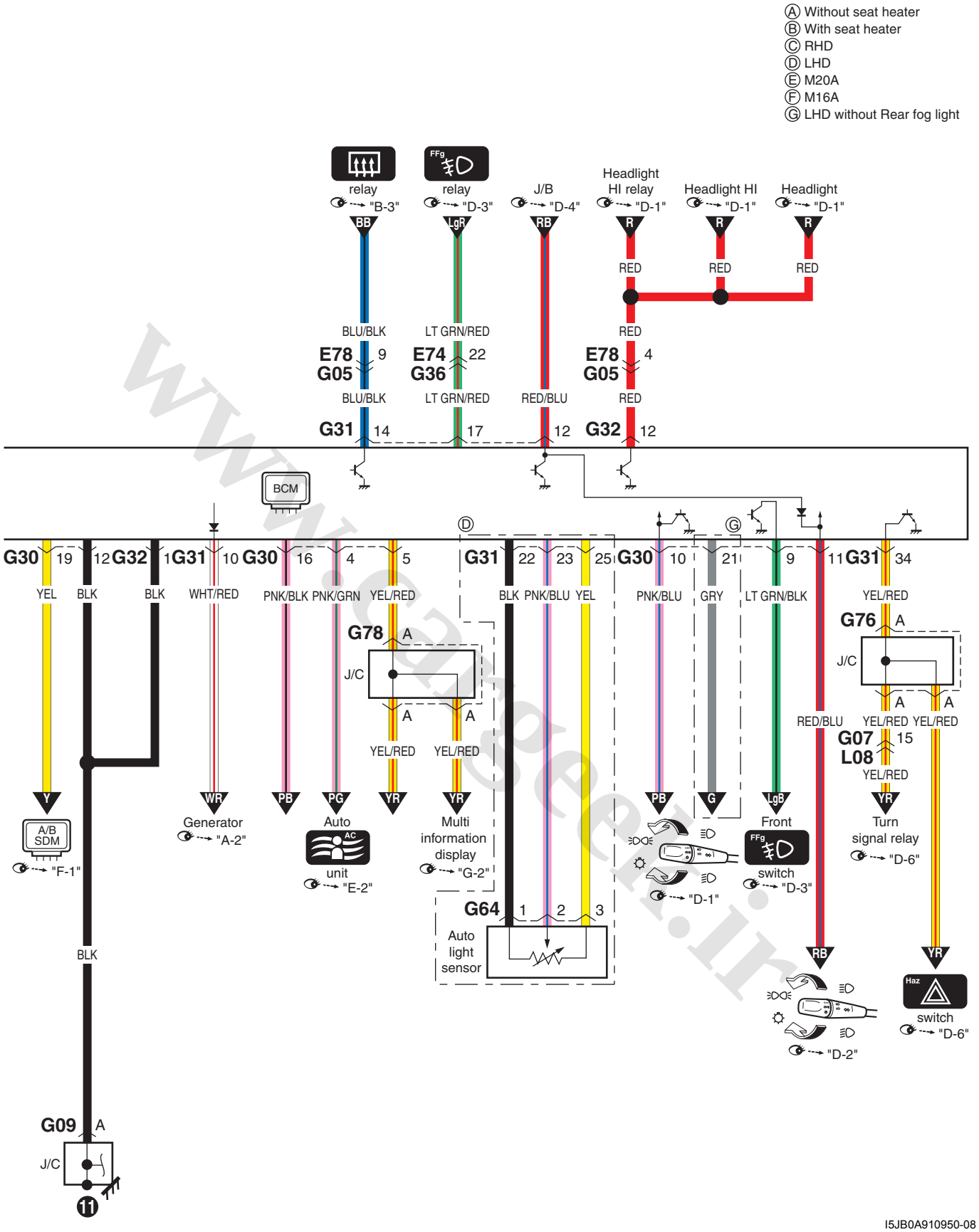
Ⓐ Without seat heater
Ⓑ With seat heater
Ⓒ RHD
Ⓓ LHD
Ⓔ M20A
Ⓕ M16A
Ⓖ LHD without Rear fog light
relay "B-3"
relay "D-3"
J/B "D-4"
Headlight HI relay "D-1"
Headlight HI "D-1"
Headlight "D-1"
BB
LgR
RB
R
RED
BLU/BLK
LT GRN/RED
E78 9
G05
E74 22
G36
E78 4
G05
RED/BLU
G31 14
17
12
G32 12
BCM
G30 19
12 G32 1
G31 10
G30 16
4
5
G31 22
23
25
G30 10
21
9
11 G31 34
YEL
BLK
WHT/RED
PNK/BLK
PNK/GRN
YEL/RED
PNK/BLU
GRY
LT GRN/BLK
G78 A
J/C
A
G76 A
G07 15
L08
Y
WR
PB
PG
YR
G
LgB
A/B SDM "F-1"
Generator "A-2"
Auto AC unit "E-2"
Multi information display "G-2"
"D-1"
Front FFg switch "D-3"
Turn signal relay "D-6"
G64 1 2 3
Auto light sensor
Haz switch "D-6"
"D-2"
G09 A
11
I5JB0A910950-08

www.CarGeek.ir

## A-10 4WD Control System Circuit Diagram

S5JB0A910E034

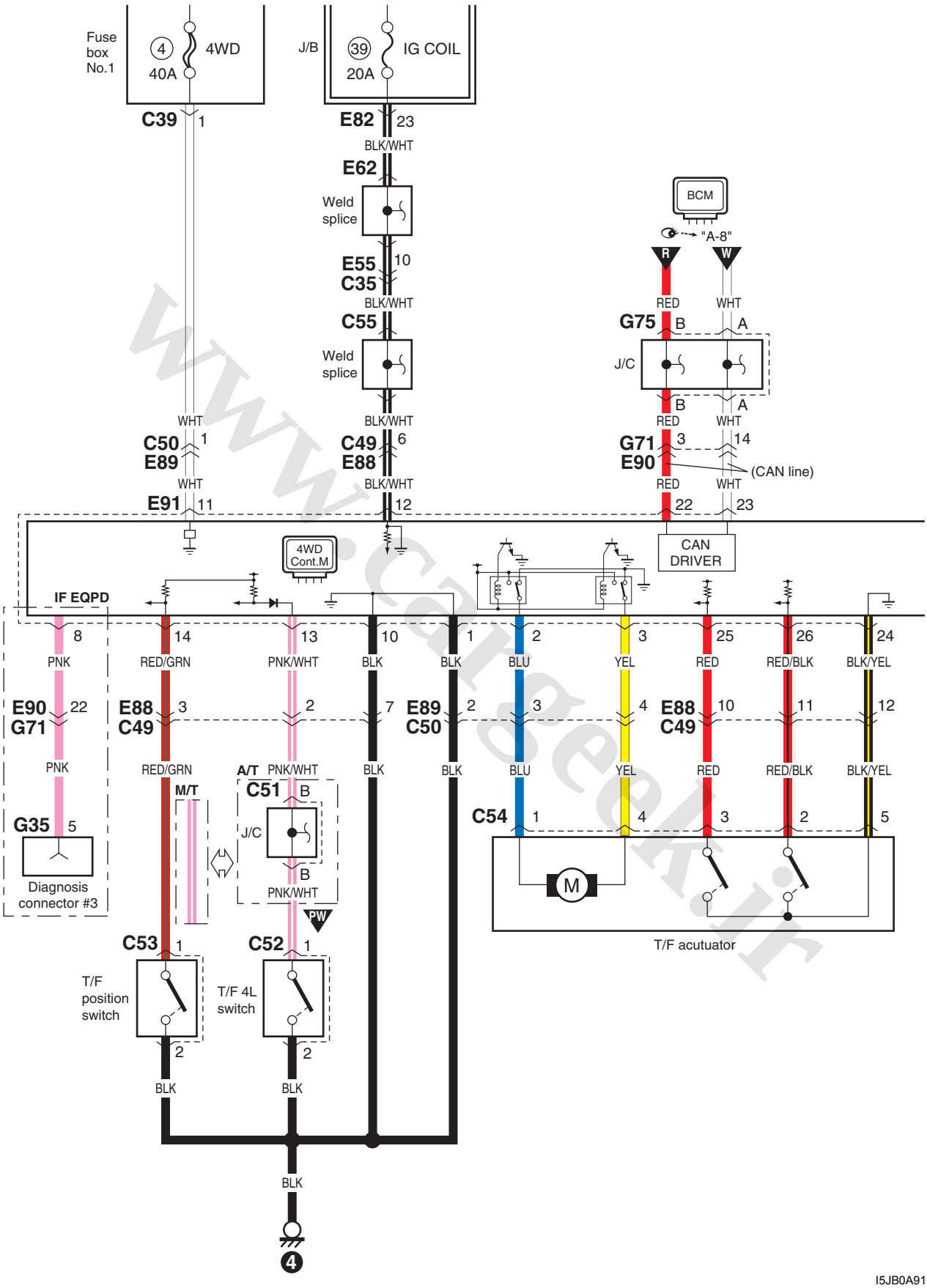


I5JB0A910951-11

www.cargeek.ir

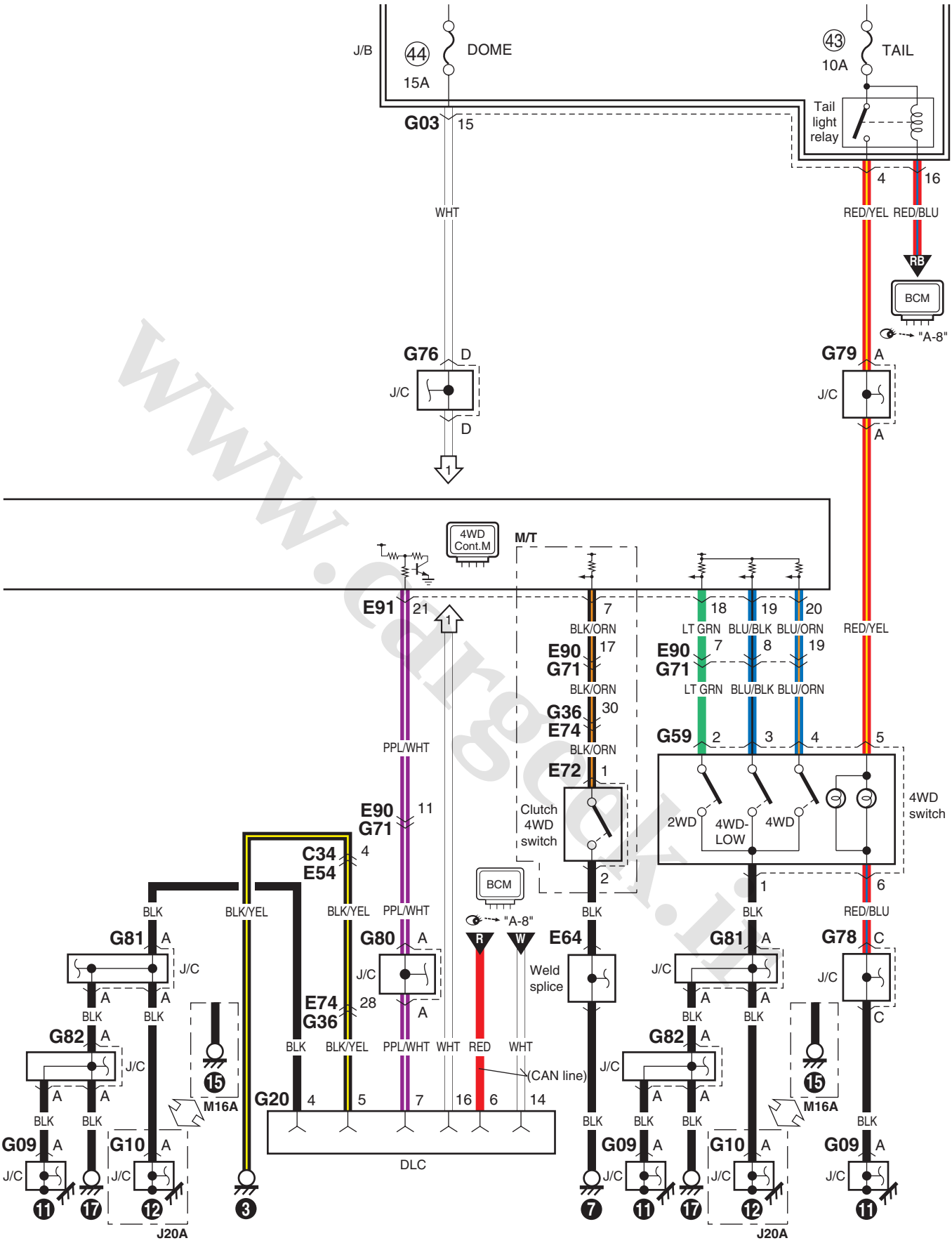
J/B
44
15A
DOME
43
10A
TAIL
Tail light relay
G03
15
WHT
4
16
RED/YEL
RED/BLU
RB
BCM
"A-8"
G76
D
J/C
D
1
G79
A
J/C
A
4WD Cont.M
M/T
E91
21
1
7
BLK/ORN
18
19
20
LT GRN
BLU/BLK
BLU/ORN
RED/YEL
E90
G71
17
E90
G71
7
8
19
BLK/ORN
LT GRN
BLU/BLK
BLU/ORN
G36
E74
30
BLK/ORN
G59
2
3
4
5
PPL/WHT
E72
1
4WD switch
2WD
4WD-LOW
4WD
E90
G71
11
Clutch 4WD switch
C34
E54
4
BCM
2
1
6
BLK
BLK/YEL
BLK/YEL
PPL/WHT
"A-8"
BLK
BLK
RED/BLU
G81
A
J/C
G80
A
R
W
E64
Weld splice
G81
A
G78
C
J/C
J/C
J/C
A
A
A
A
A
A
A
A
BLK
BLK
E74
G36
28
A
BLK
BLK
C
G82
A
J/C
BLK
BLK/YEL
PPL/WHT
WHT
RED
WHT
(CAN line)
G82
A
J/C
15
M16A
G20
4
5
7
16
6
14
15
M16A
A
A
A
A
BLK
BLK
BLK
BLK
BLK
BLK
BLK
BLK
G09
A
G10
A
DLC
G09
A
G10
A
G09
A
J/C
J/C
J/C
J/C
J/C
J/C
J/C
J/C
11
17
12
3
7
11
17
12
11
J20A
J20A
I5JB0A910952-04

www.CarGeek.ir

## B-1 Windshield Wiper and Washer Circuit Diagram

S5JB0A910E009

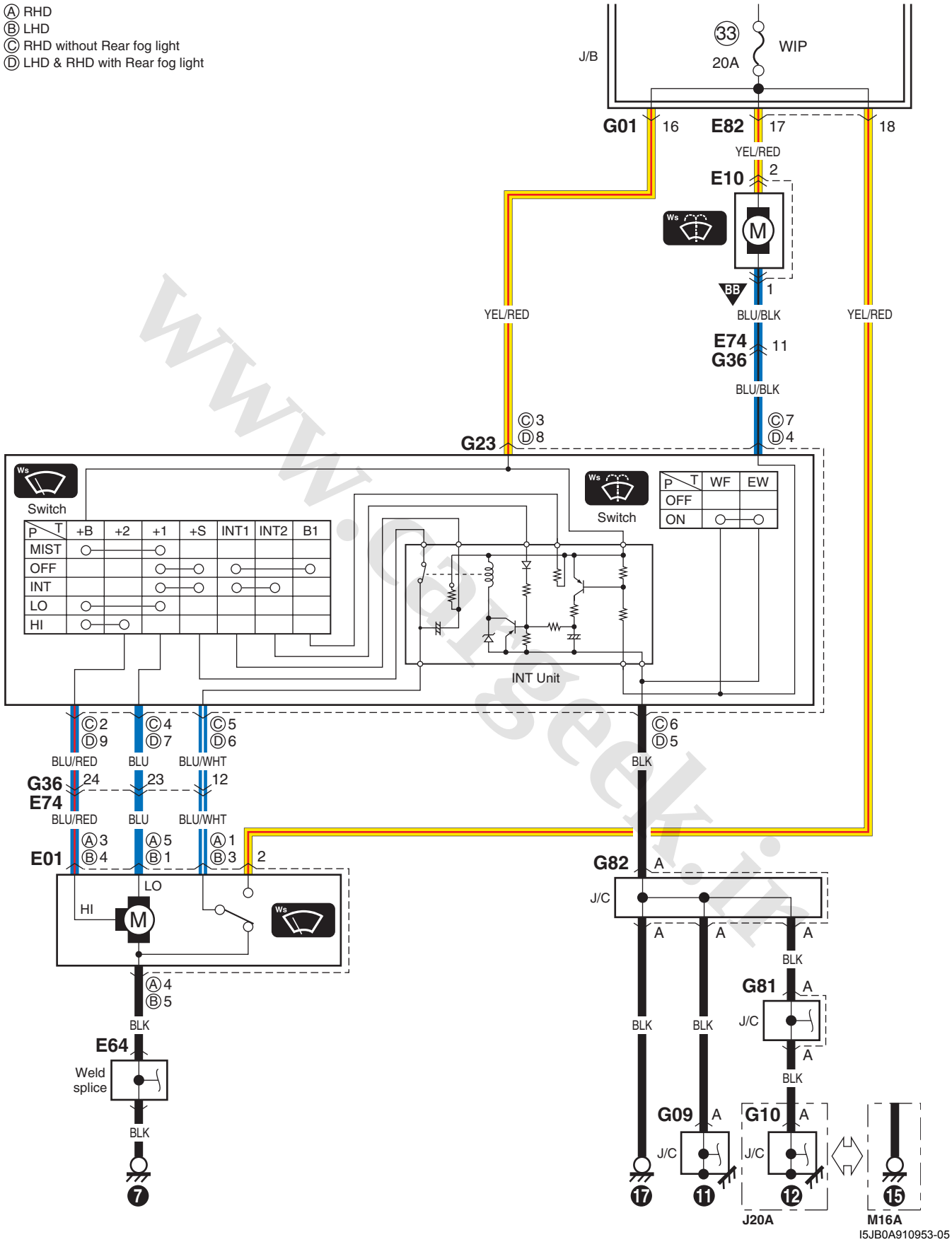


www.cargeek.ir

www.CarGeek.ir


## B-2 Rear Wiper and Washer Circuit Diagram

S5JB0A910E010

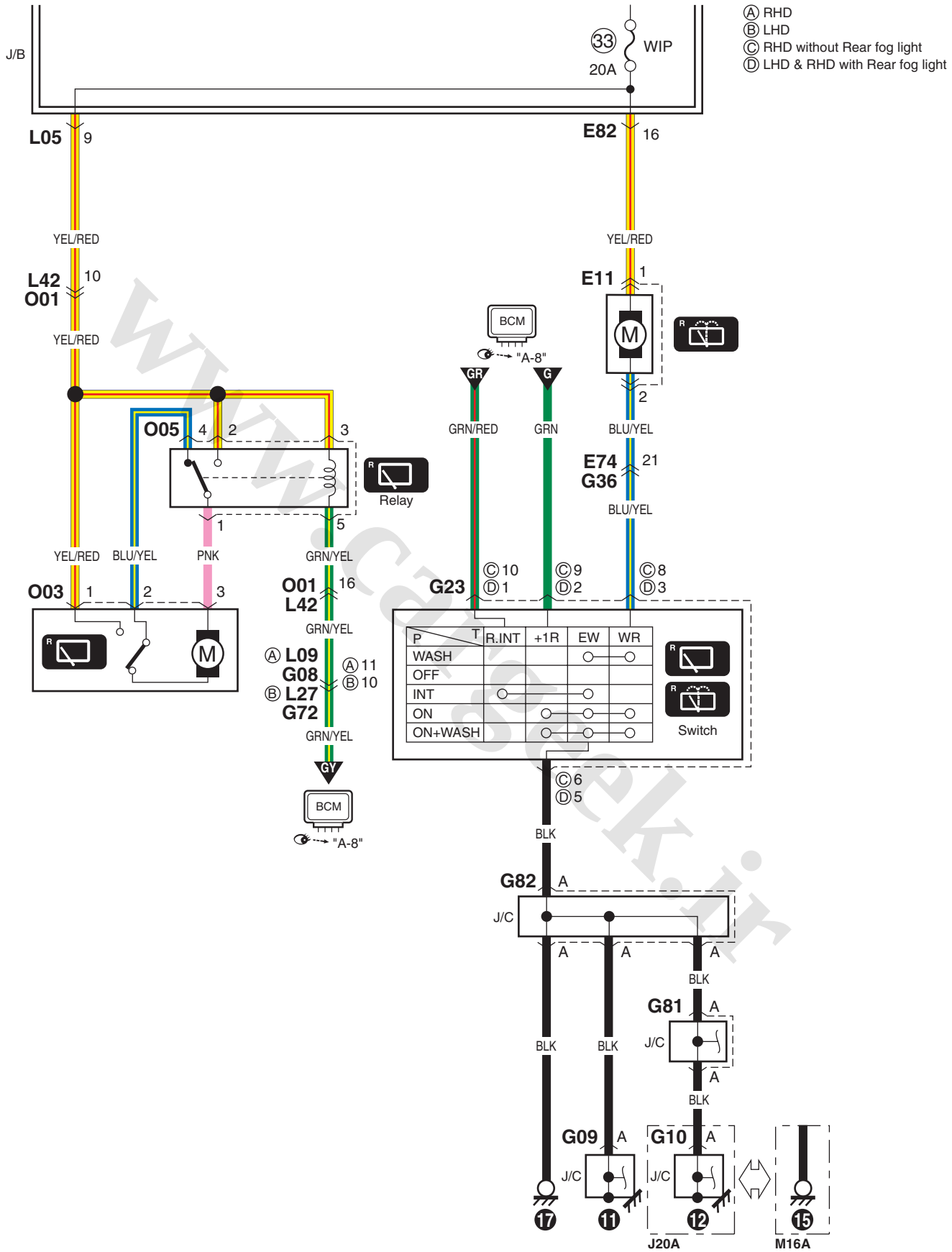


I5JB0A910954-07

www.cargeek.ir

www.CarGeek.ir

## B-3 Rear Defogger Circuit Diagram

S5JB0A910E011

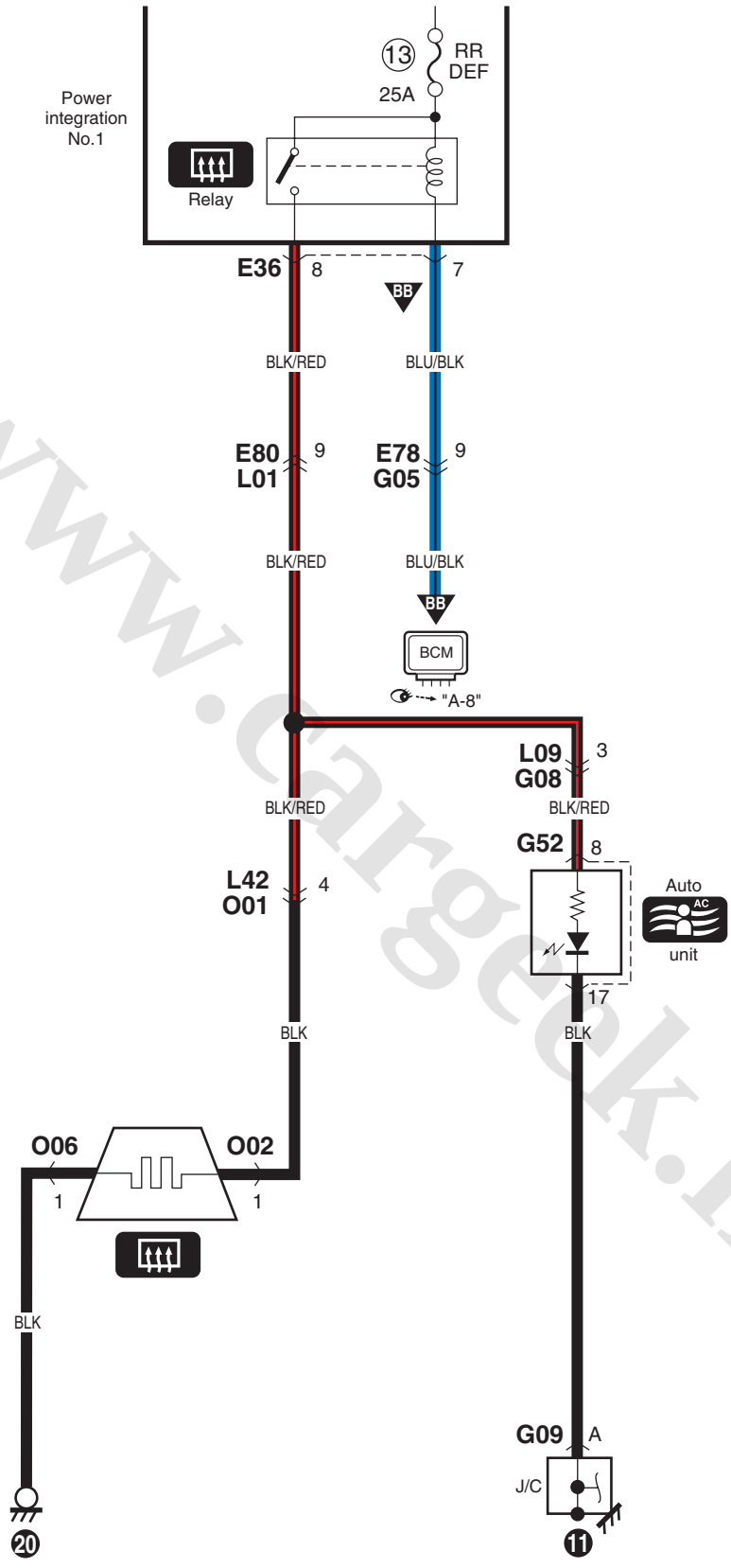


I5JB0A910955-05

www.cargeek.ir

www.CarGeek.ir


## B-4 Power Window Circuit Diagram

S5JB0A910E012

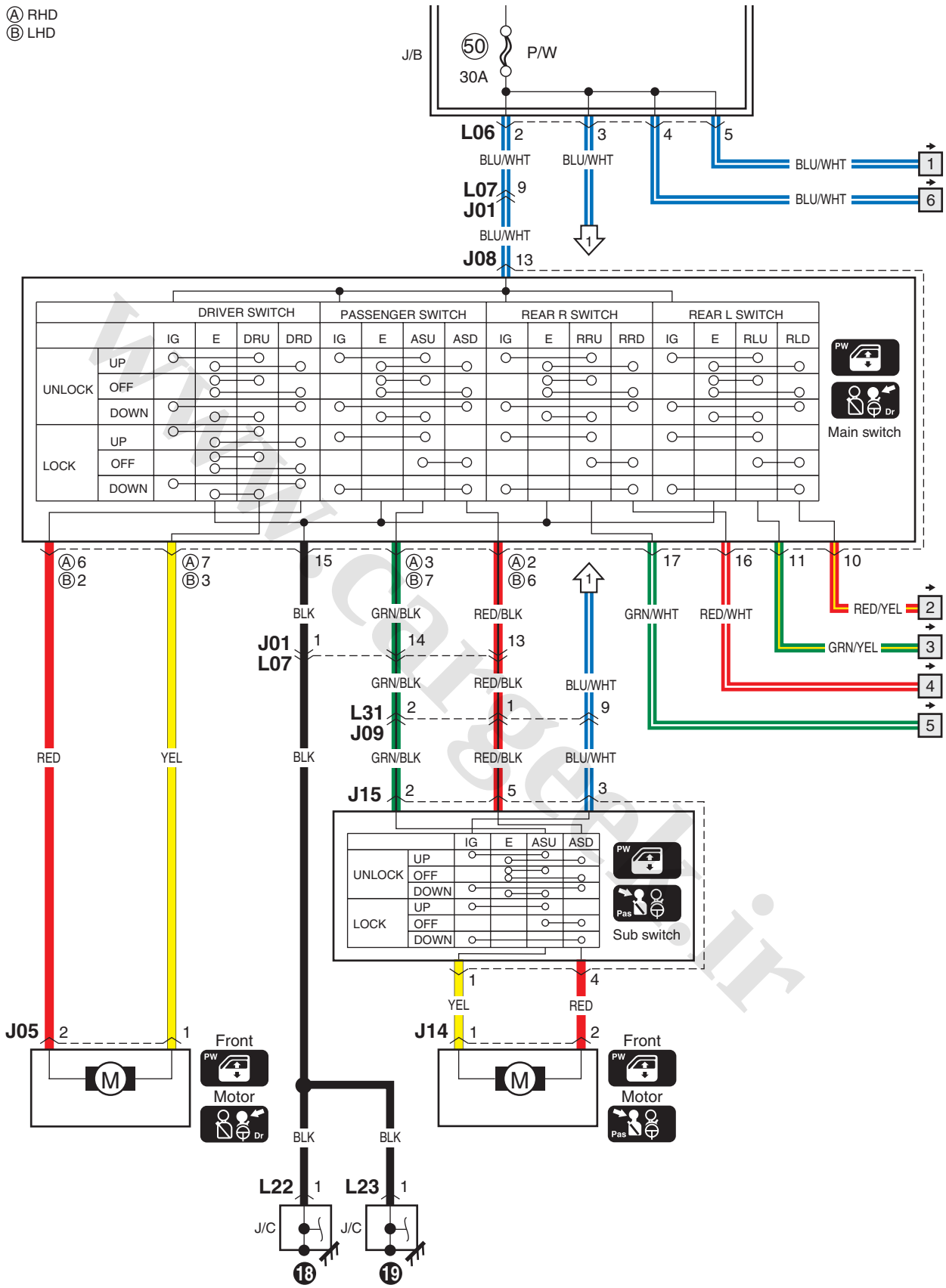


I5JB0A910956-01

www.cargeek.ir

www.CarGeek.ir

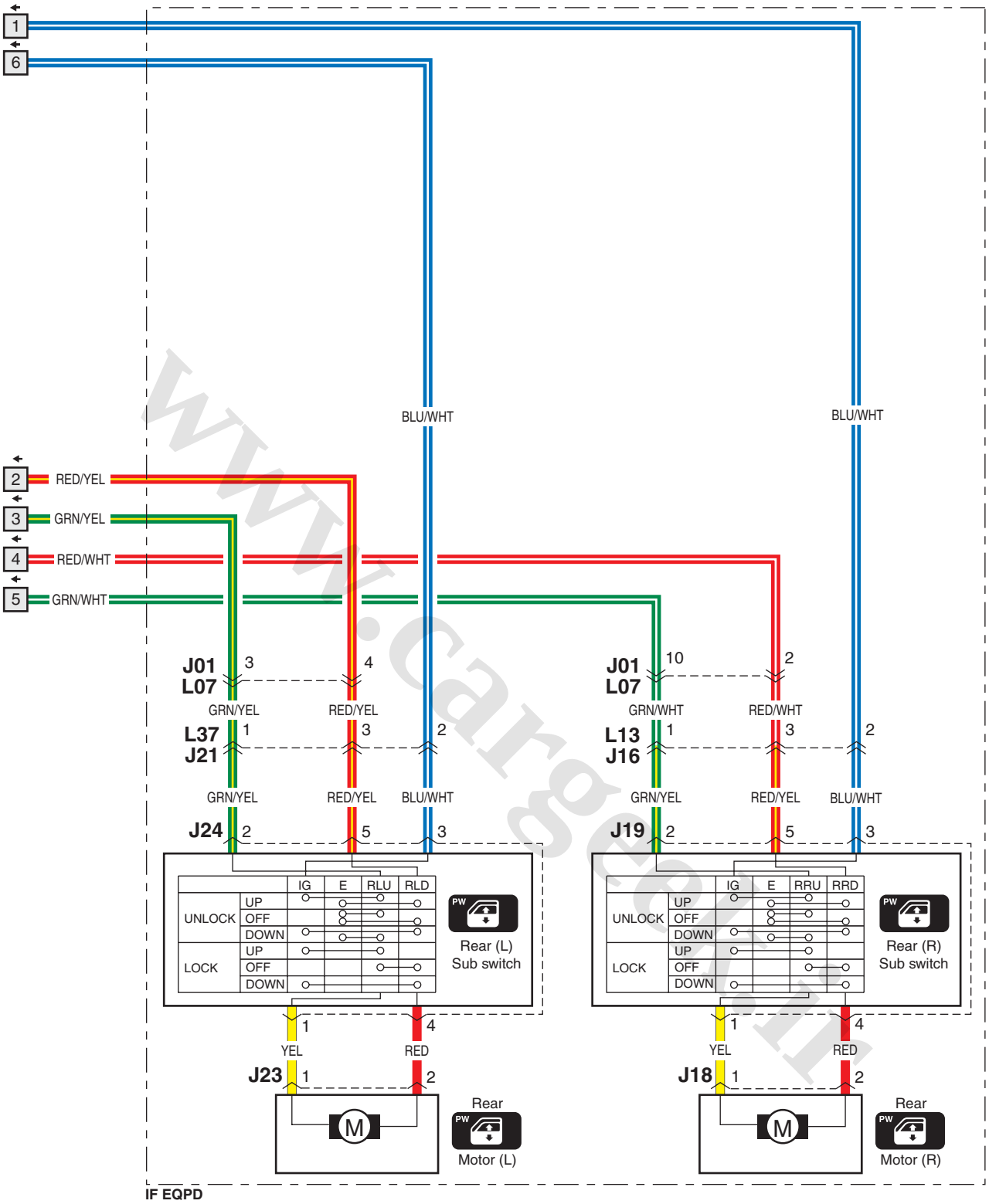


I5JB0A910957-02

www.cargeek.ir

## B-5 Power Door Lock Circuit Diagram

S5JB0A910E013

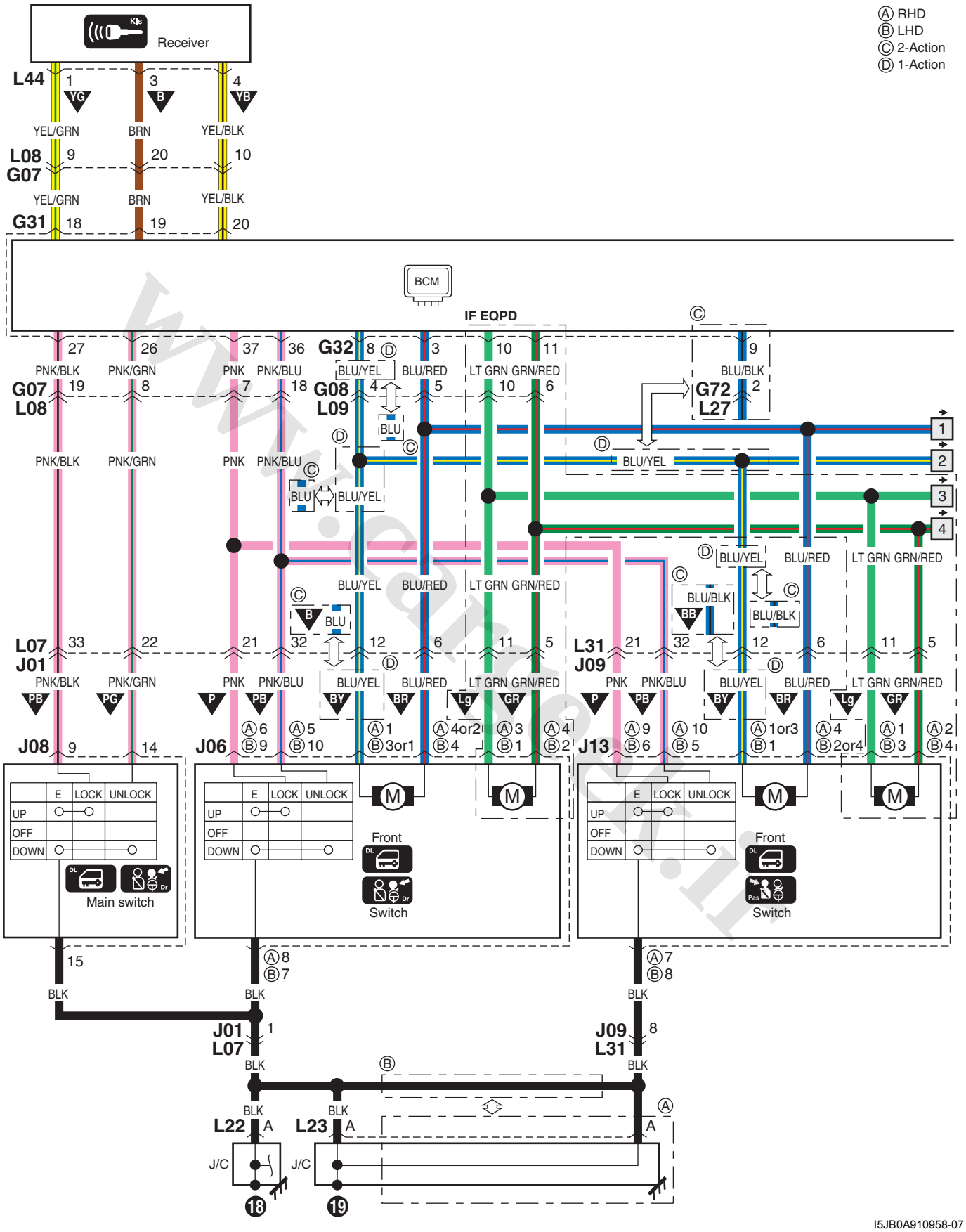

www.CarGeek.ir

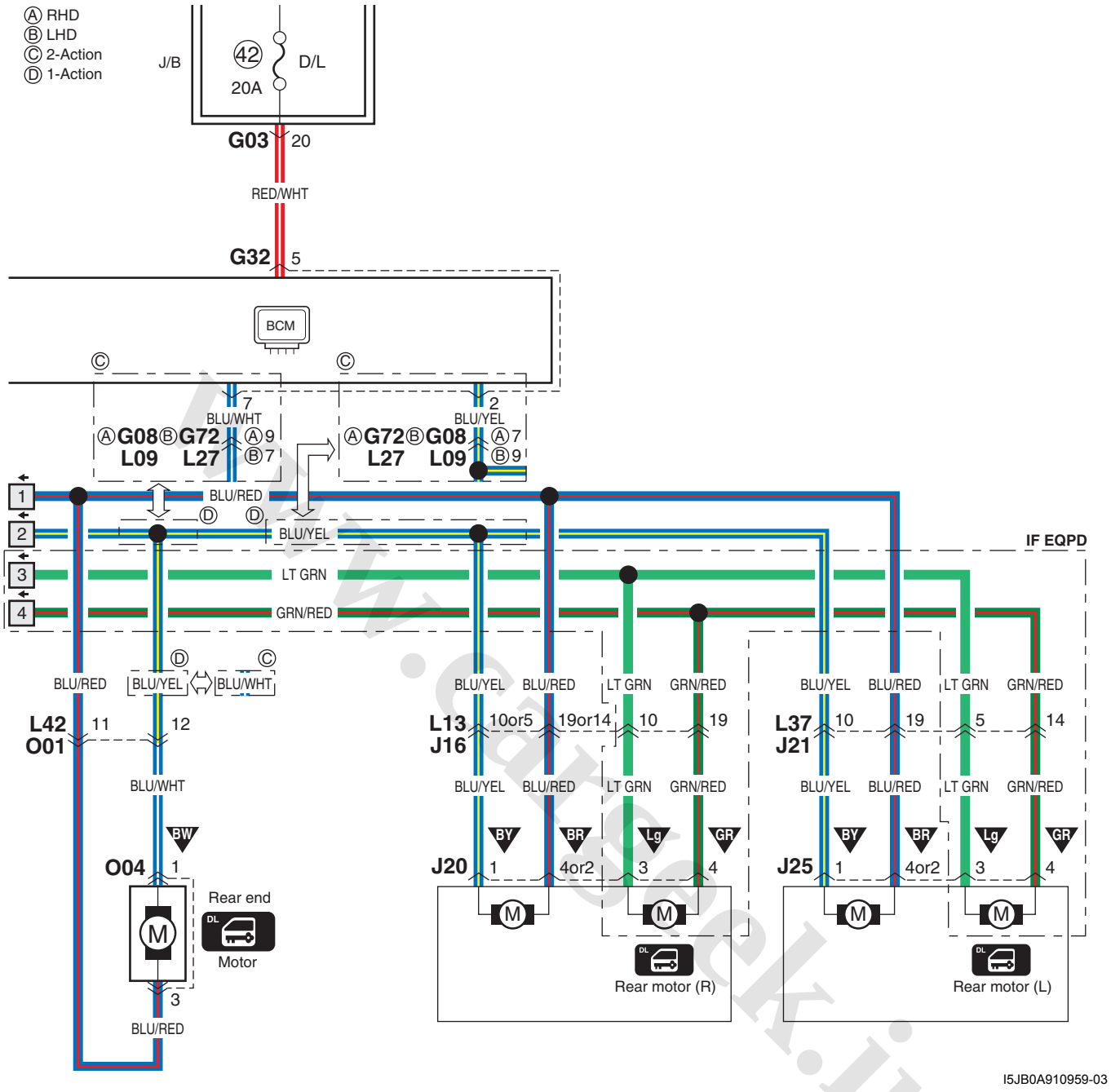


www.cargeek.ir

www.CarGeek.ir


## B-6 Power Mirror Circuit Diagram

S5JB0A910E014

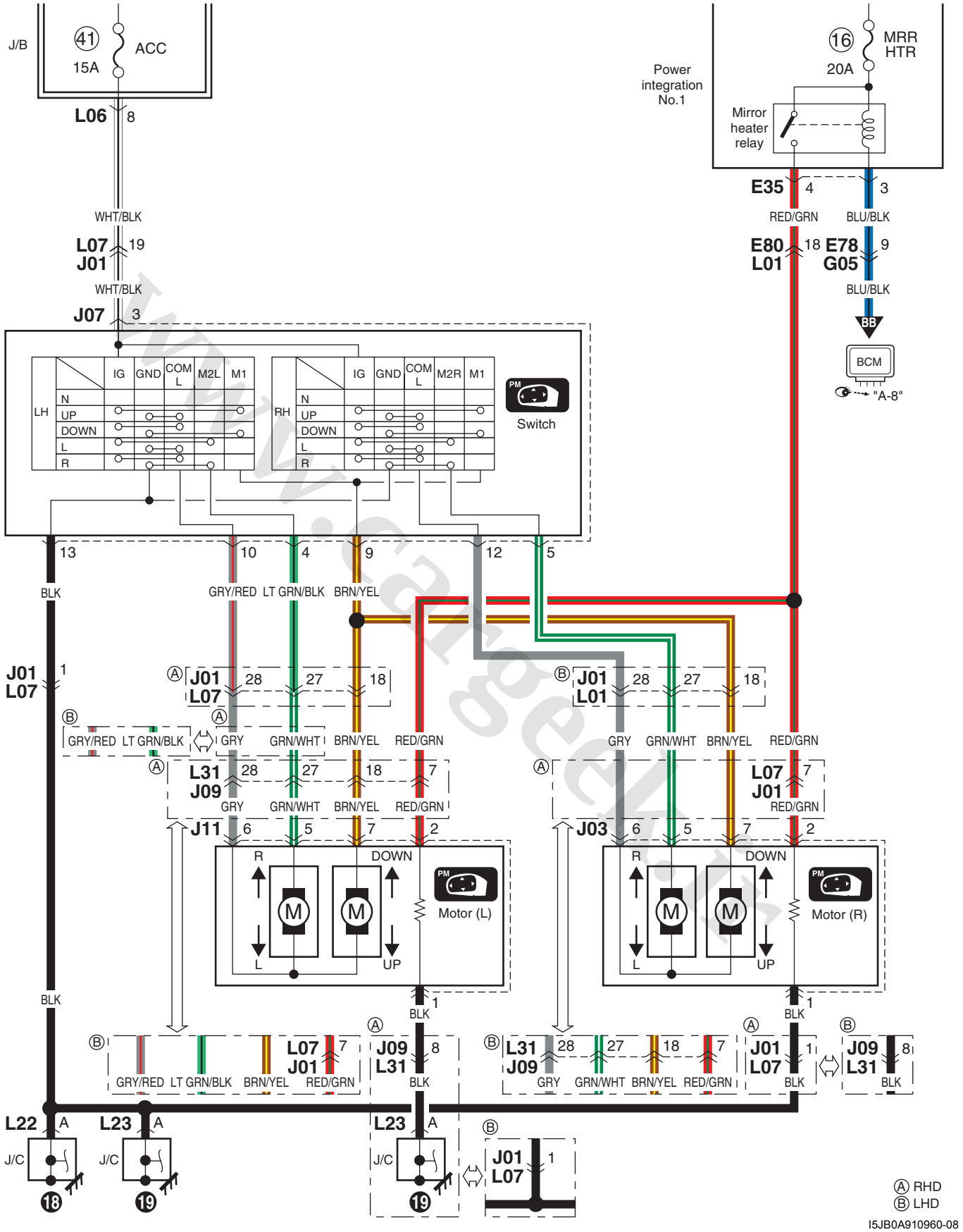


www.cargeek.ir

www.CarGeek.ir

## B-7 Horn Circuit Diagram

S5JB0A910E015

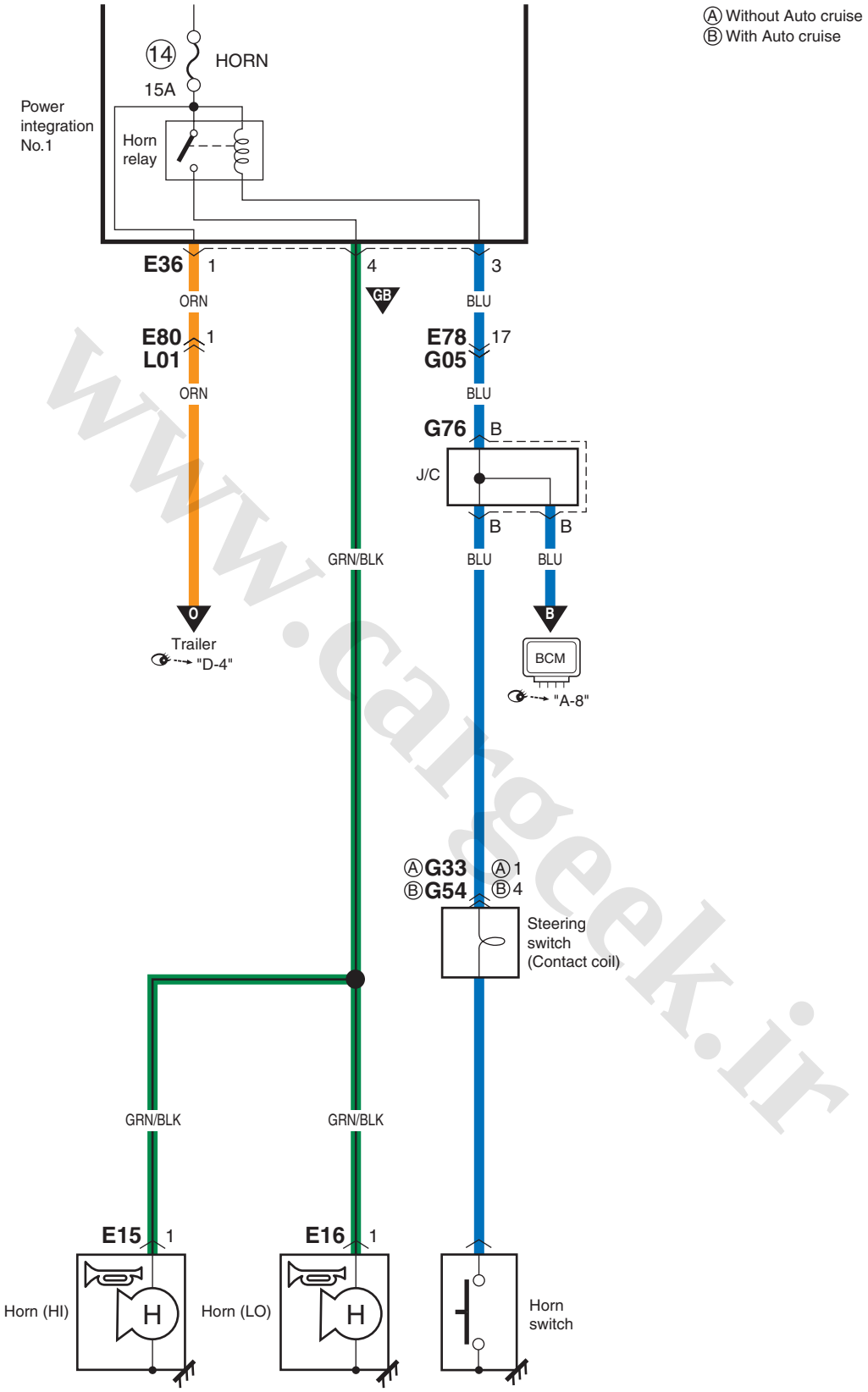


I5JB0A910961-06

www.cargeek.ir

## B-8 Seat Heater Circuit Diagram

S5JB0A910E035

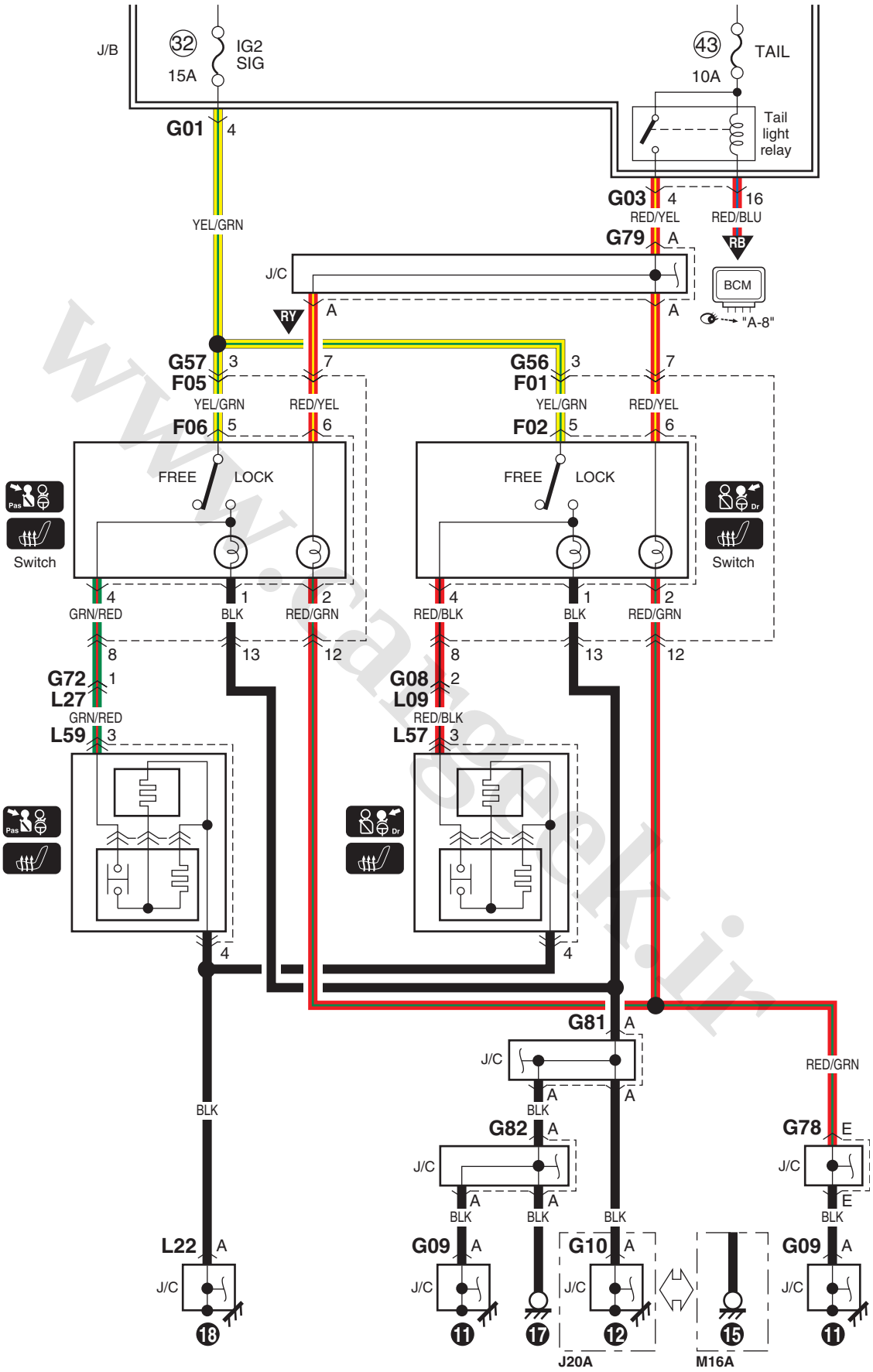


I5JB0A910962-04

www.CarGeek.ir

## B-9 Smart Key System Circuit Diagram

S5JB0A910E036

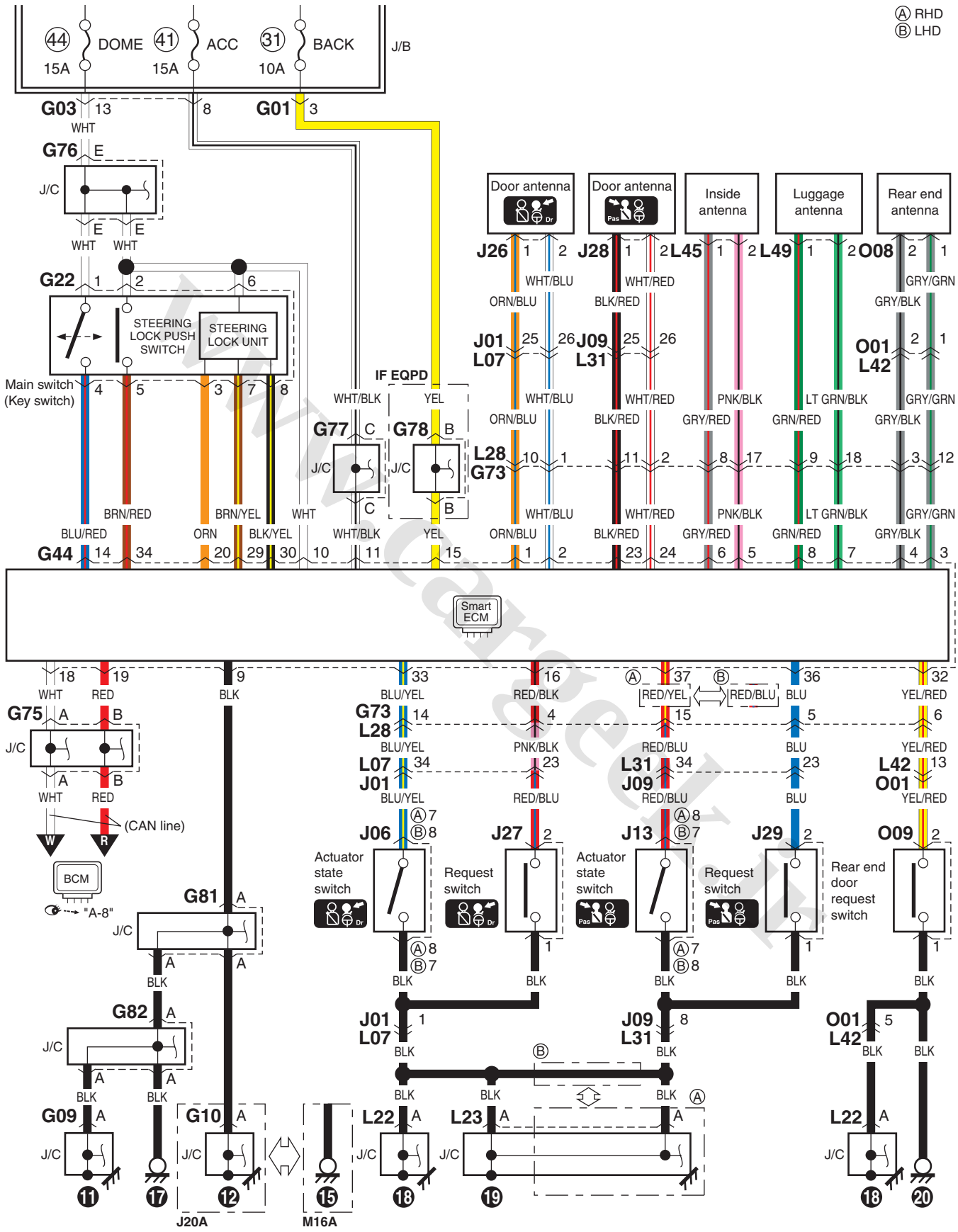


www.cargeek.ir

## B-10 Sliding Roof Circuit Diagram

S5JB0A910E042

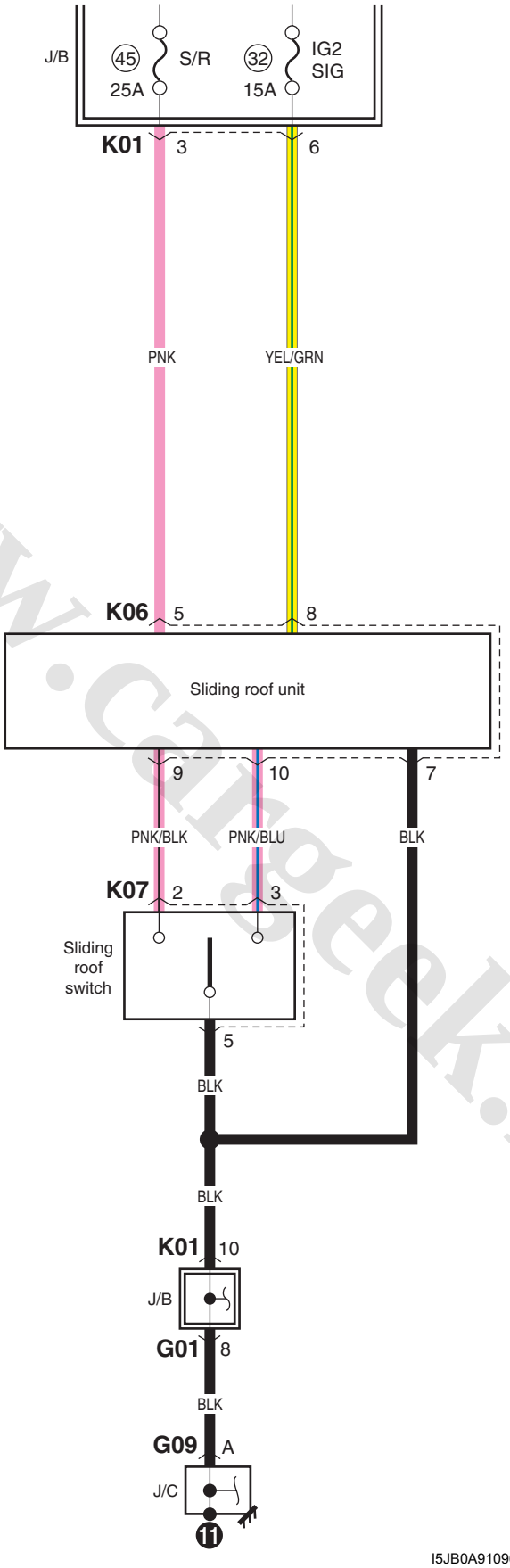


I5JB0A910964-03

www.cargeek.ir

www.CarGeek.ir

## B-11 Headlight Cleaner Circuit Diagram

S5JB0A910E043

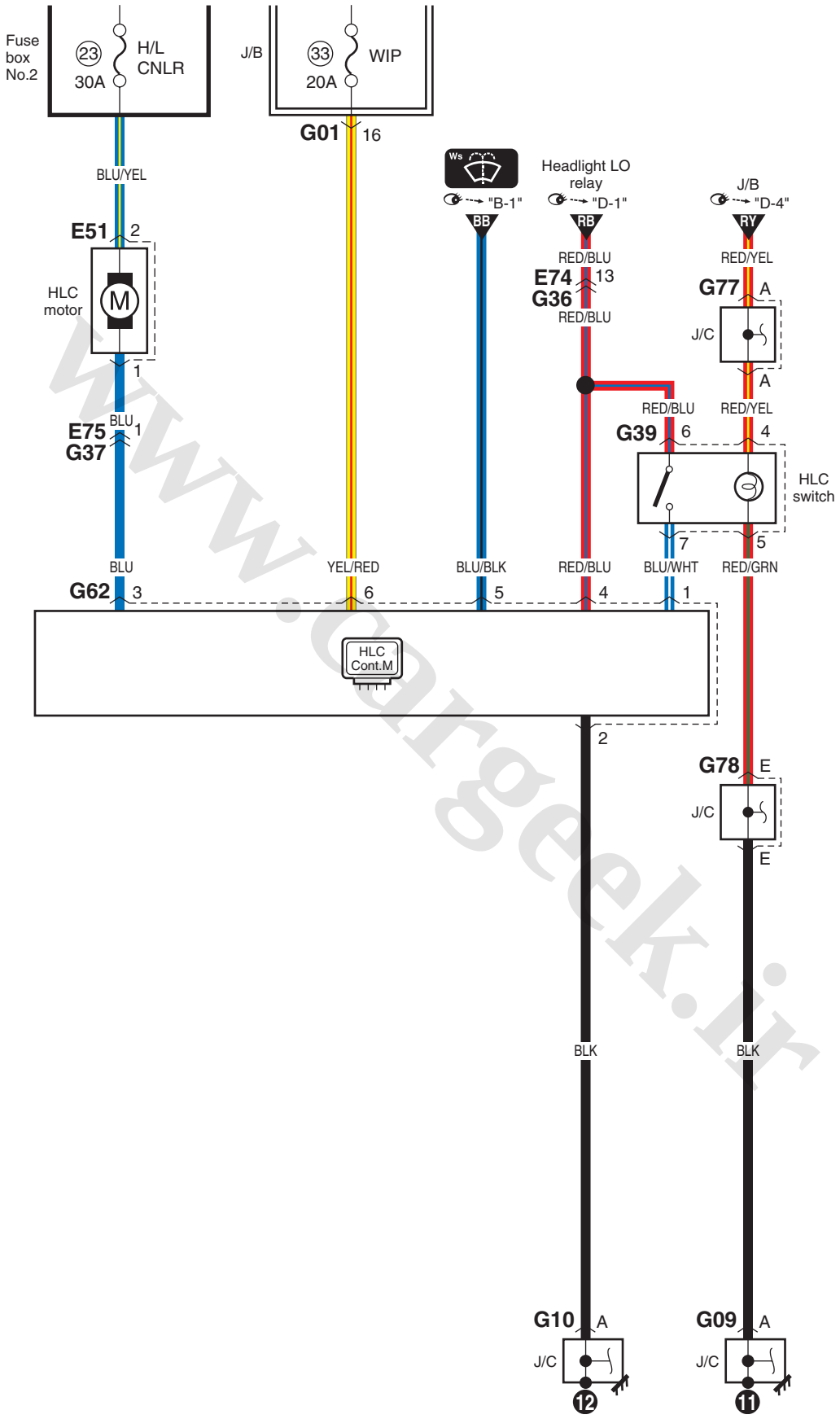


I5JB0A910965-08

www.cargeek.ir

www.CarGeek.ir


## C-1 Combination Meter Circuit Diagram

S5JB0A910E017

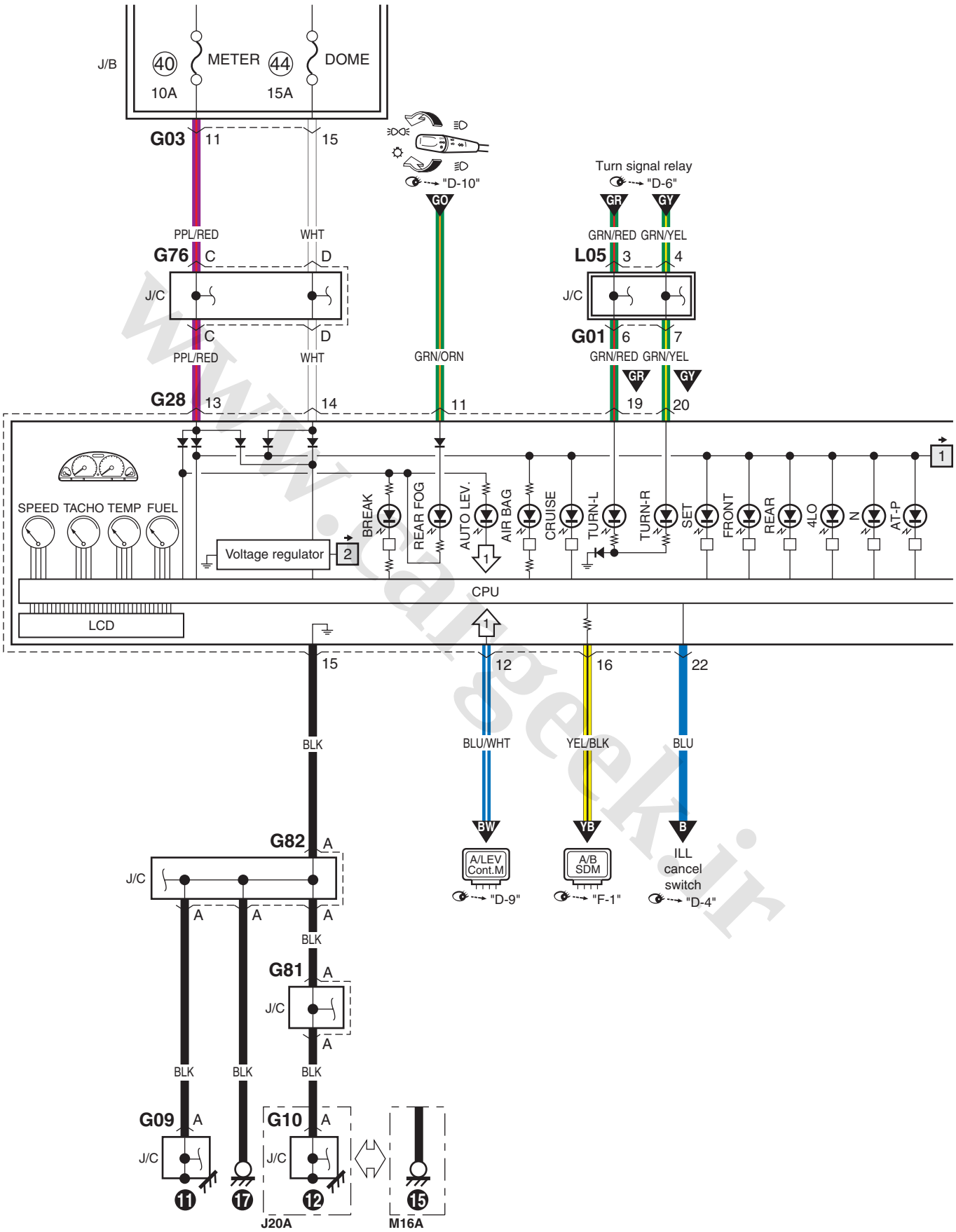


I5JB0A910966-03

www.cargeek.ir

www.CarGeek.ir

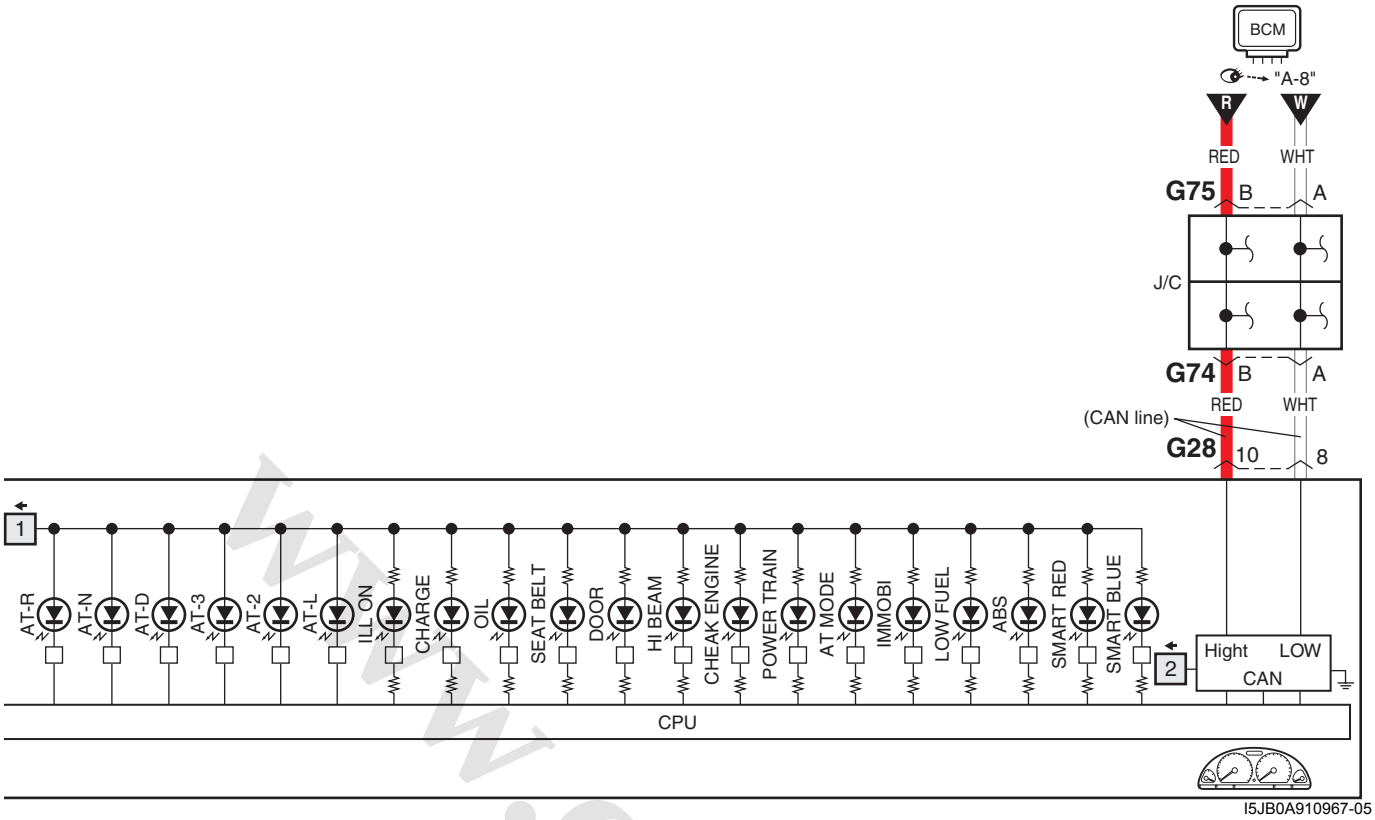


I5JB0A910967-05

www.cargeek.ir

www.cargeek.ir

## D-1 Headlight System Circuit Diagram (One bulb type)

S5JB0A910E019

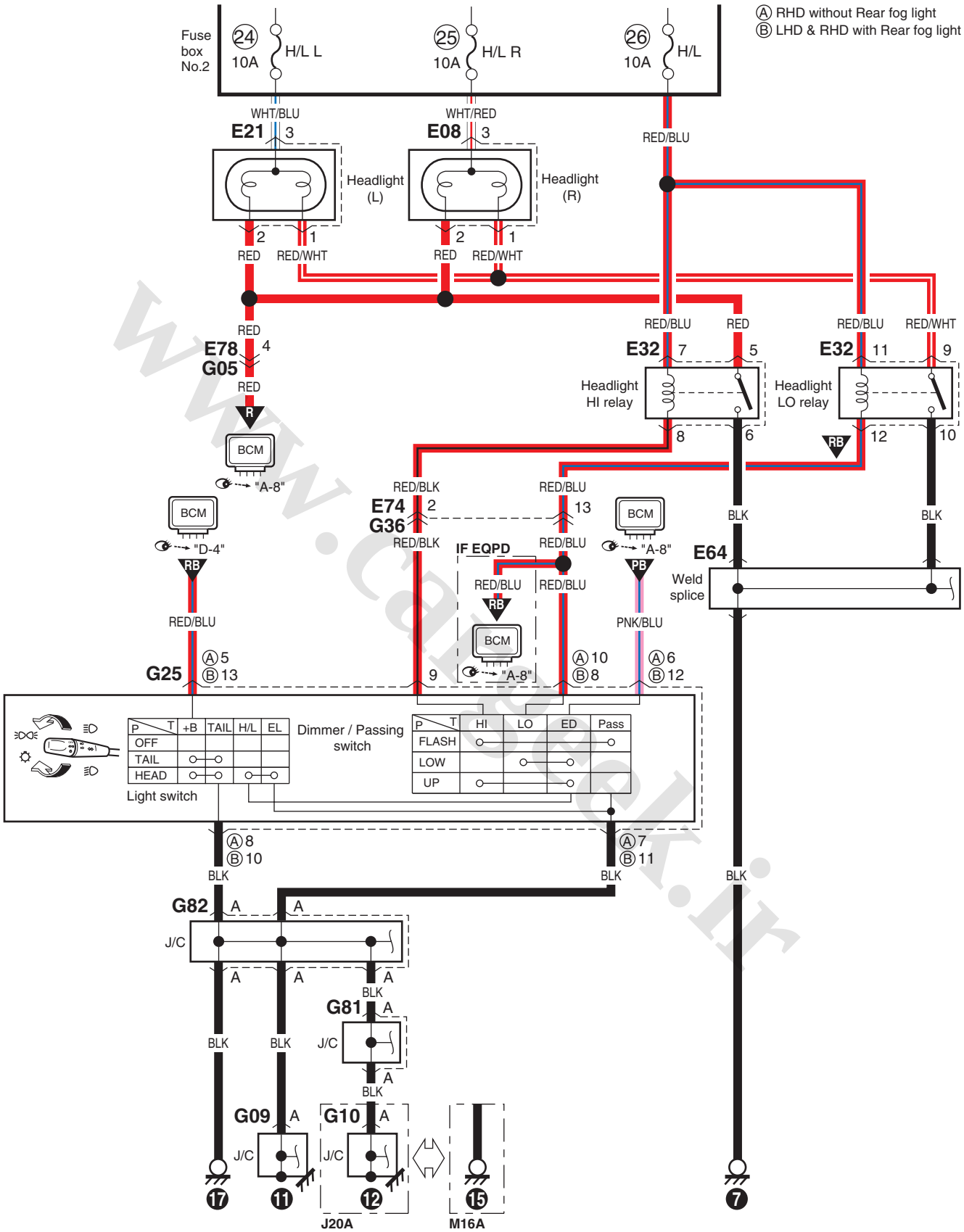

www.CarGeek.ir

## D-1 Headlight System Circuit Diagram (With Projector light)

S5JB0A910E044

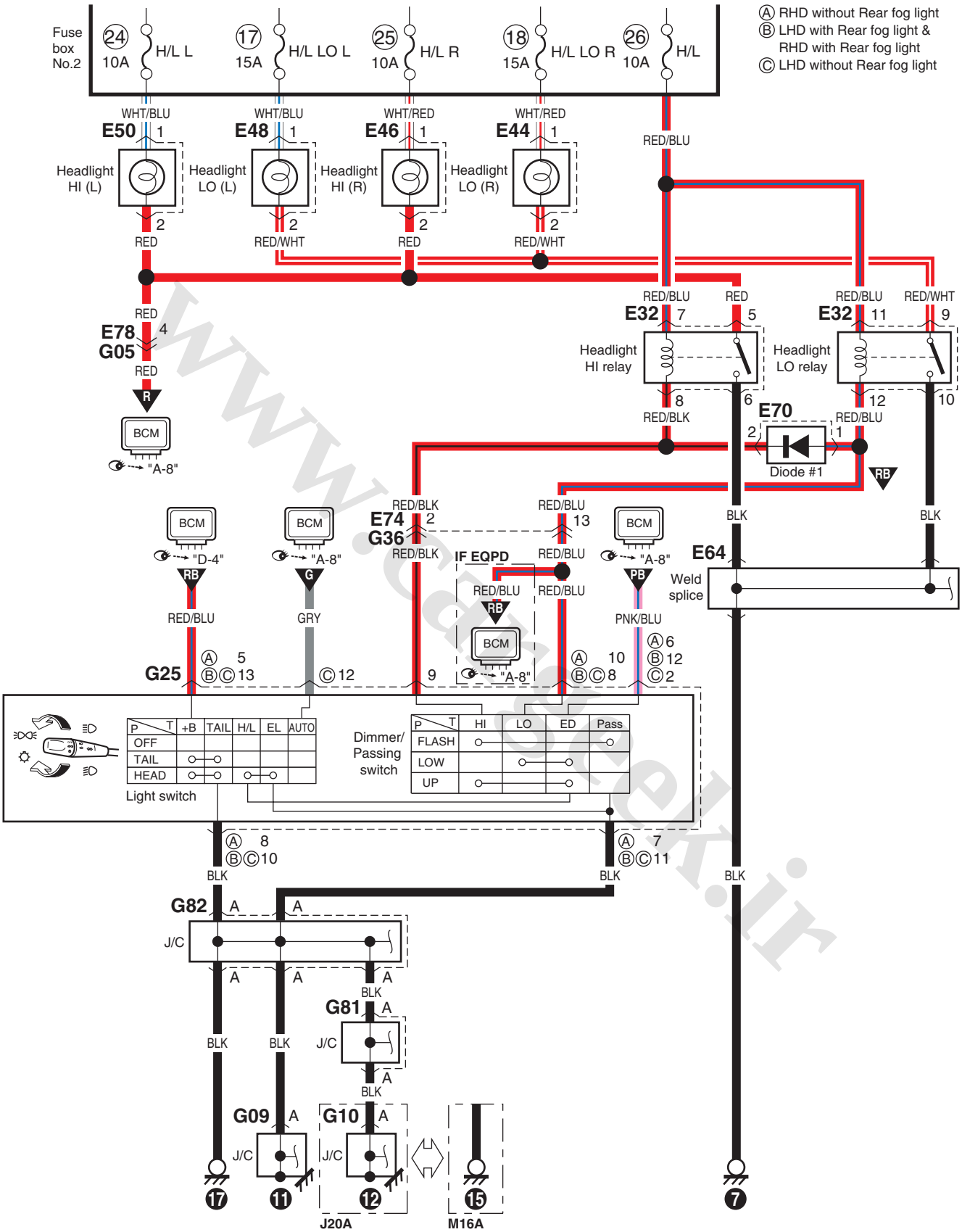


www.cargeek.ir

## D-1 Headlight System Circuit Diagram (With Discharge bulb)

S5JB0A910E045

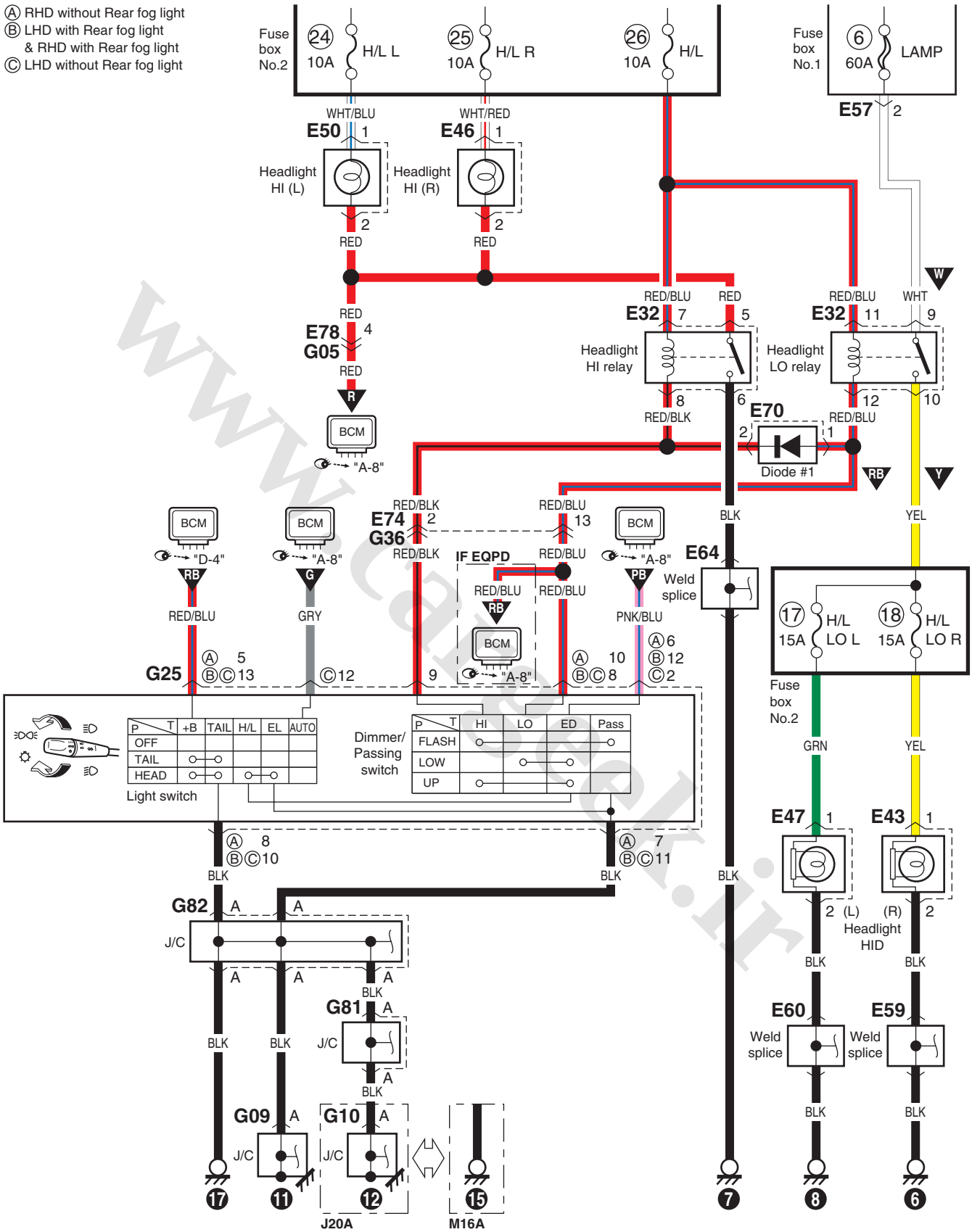


I5JB0A910970-14

www.CarGeek.ir

## D-2 Position, Tail and Licence Plate Light System Circuit Diagram

S5JB0A910E020

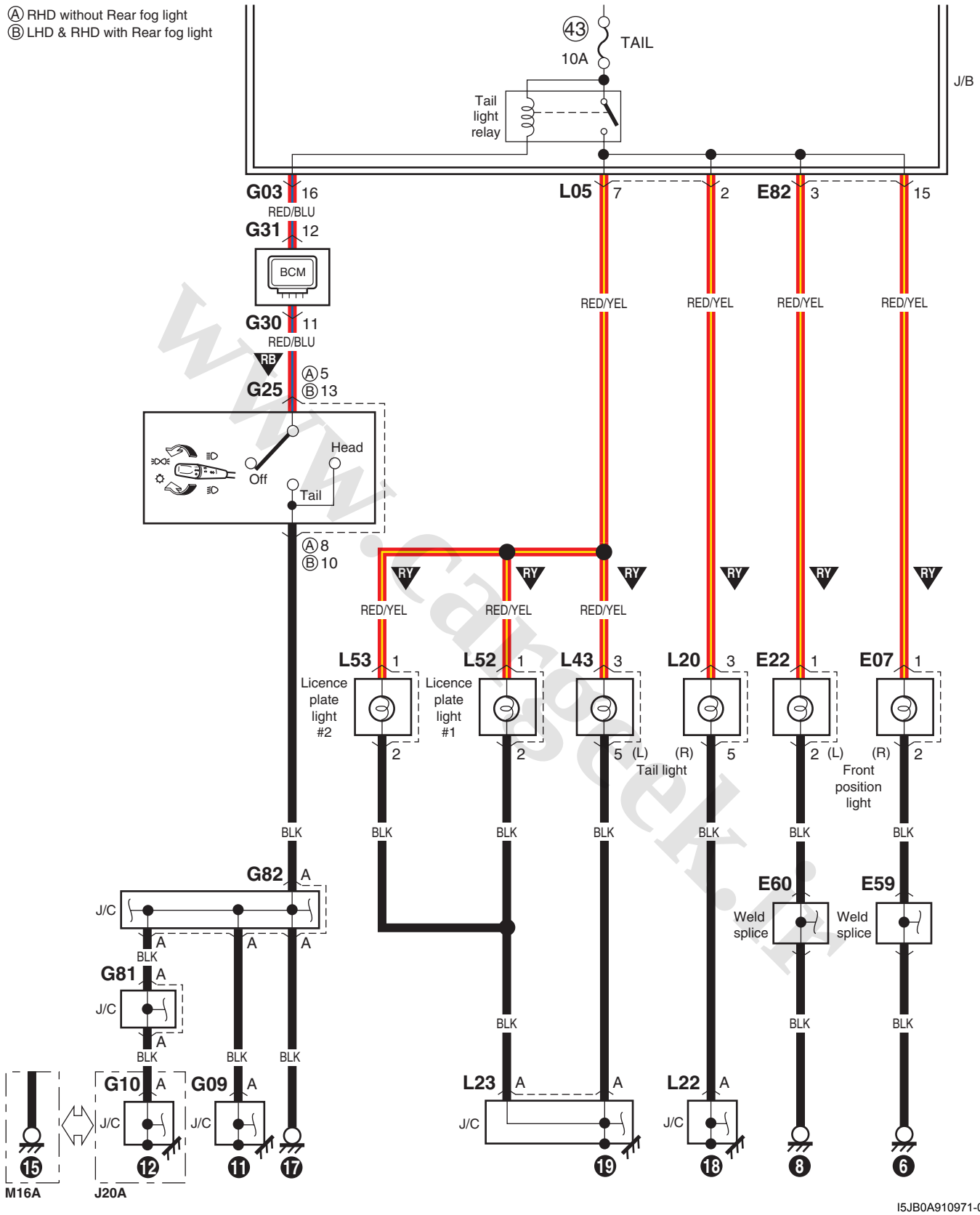


I5JB0A910971-03

www.cargeek.ir

www.CarGeek.ir


## D-3 Front Fog Light System Circuit Diagram

S5JB0A910E021

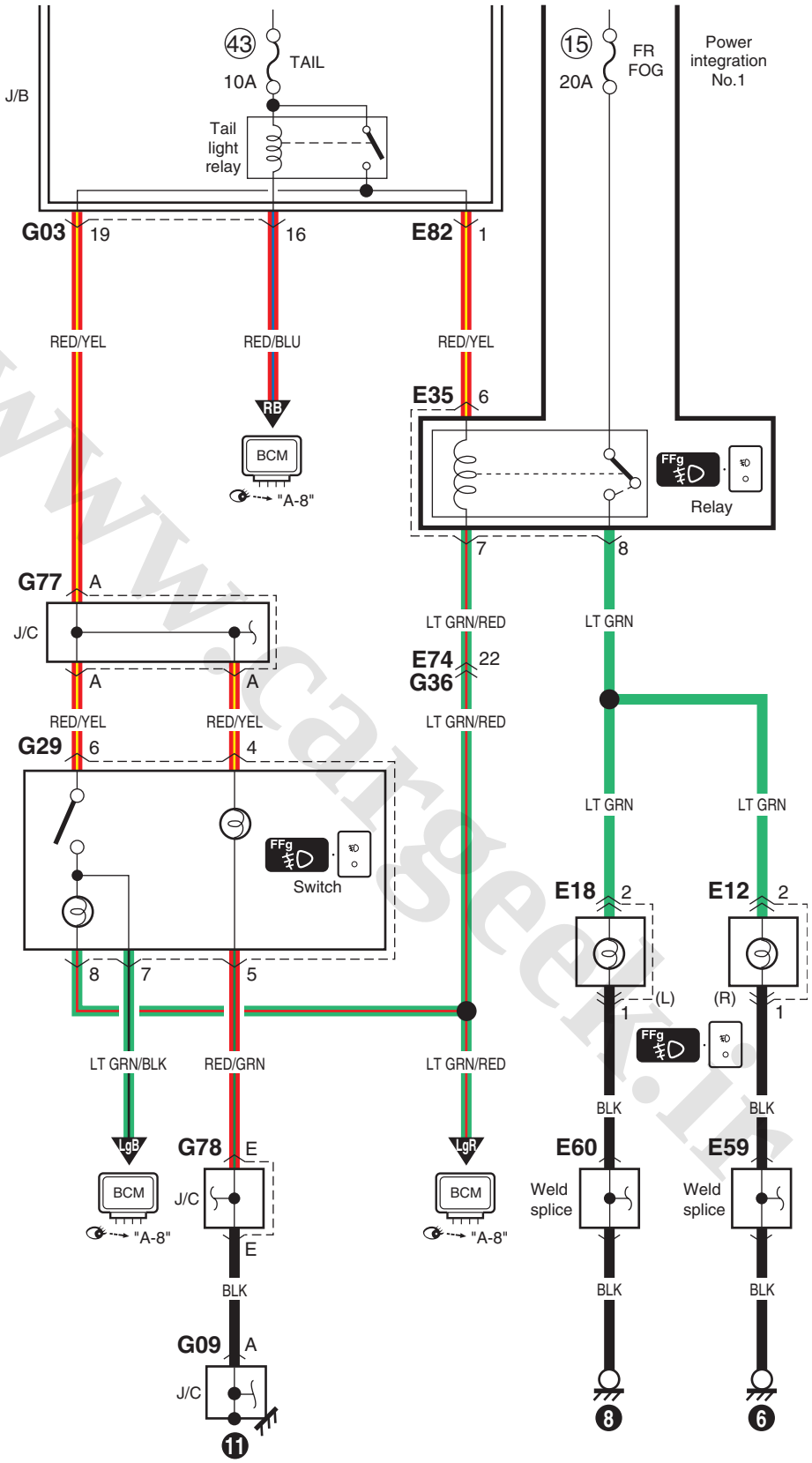


I5JB0A910972-07

www.cargeek.ir

www.CarGeek.ir

## D-4 Illumination Light System Circuit Diagram

S5JB0A910E022

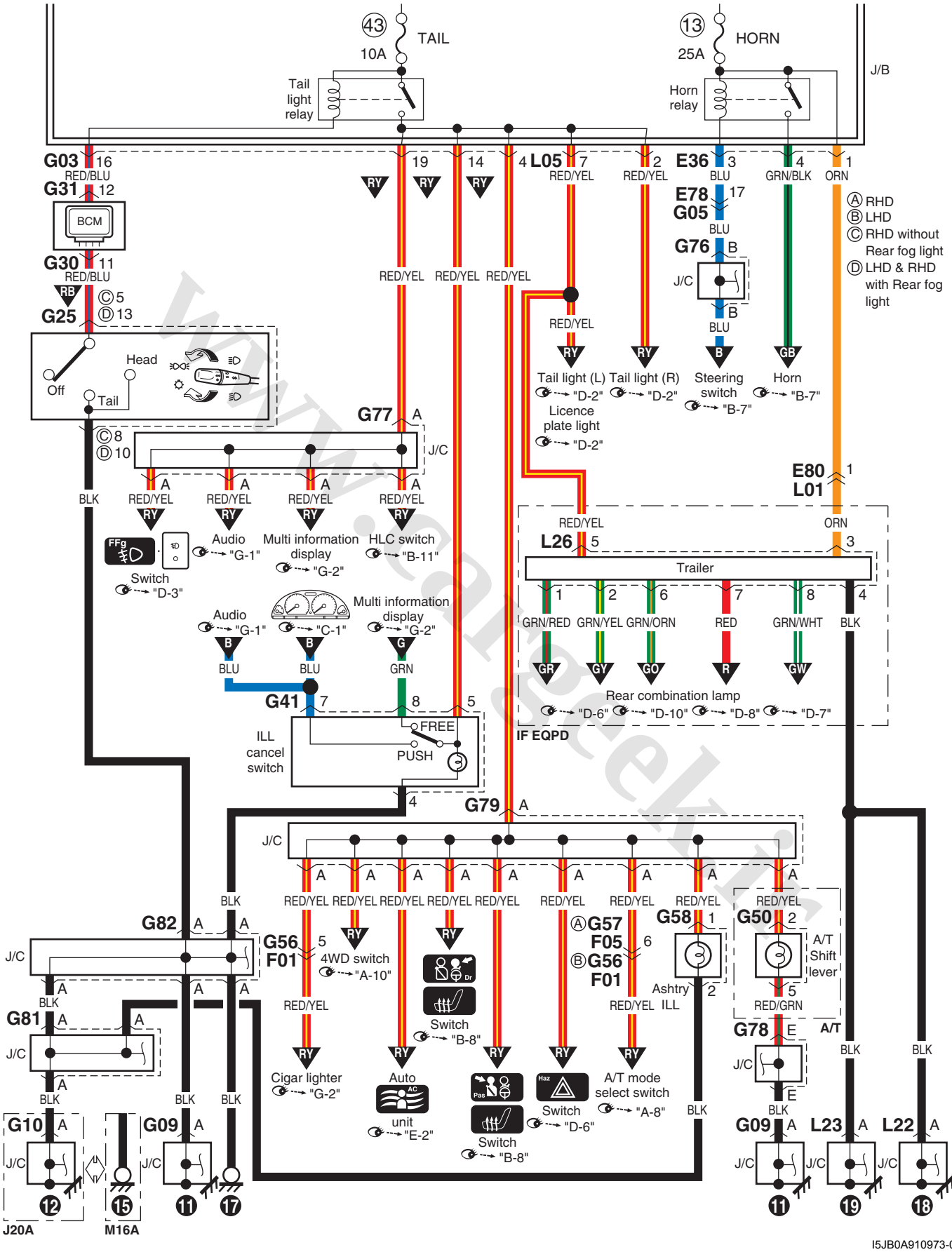


I5JB0A910973-09

www.cargeek.ir

## D-5 Interior Light System Circuit Diagram

S5JB0A910E023

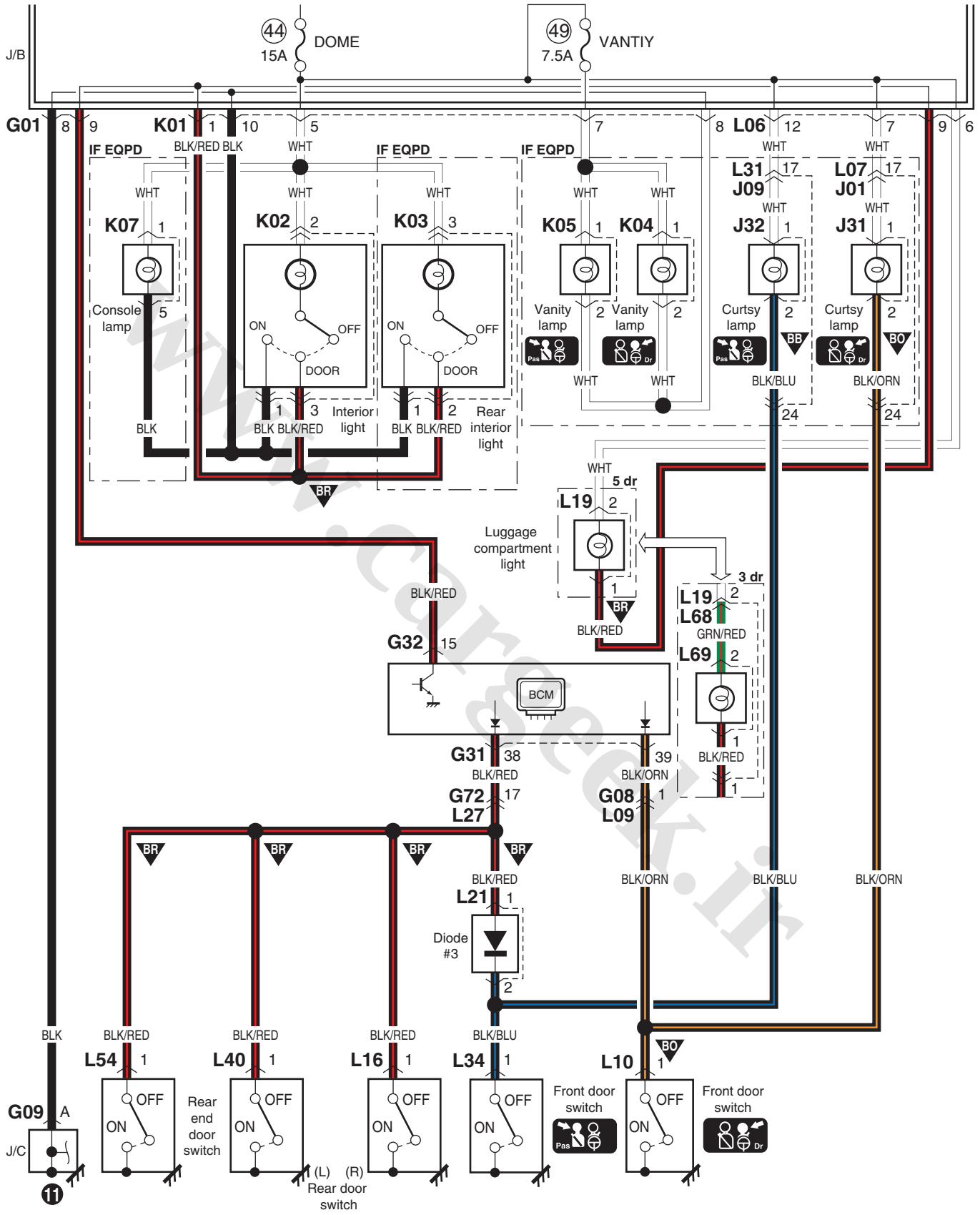

www.CarGeek.ir

## D-6 Turn Signal and Hazard Warning Light System Circuit Diagram

S5JB0A910E024

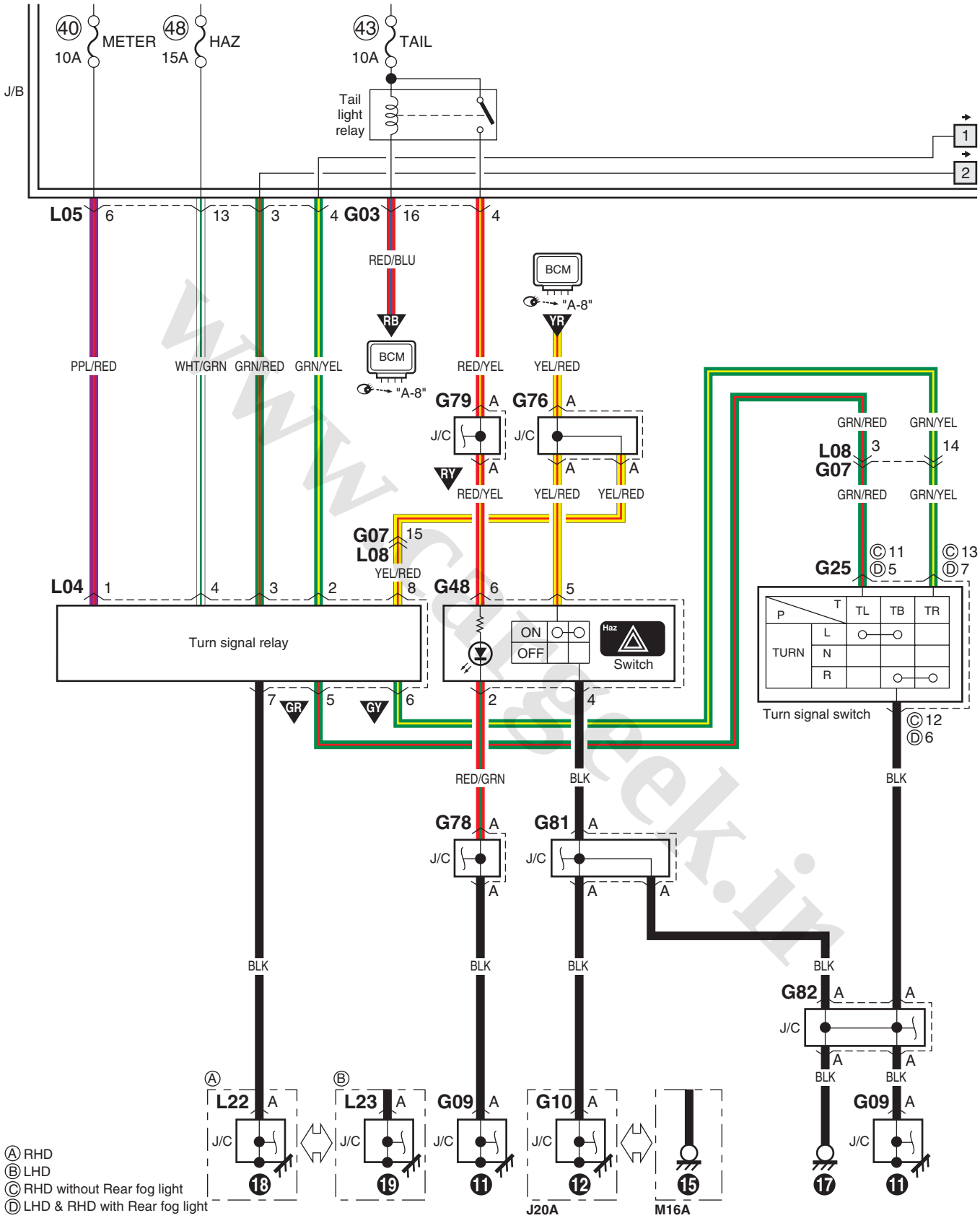


Ⓐ RHD
Ⓑ LHD
Ⓒ RHD without Rear fog light
Ⓓ LHD & RHD with Rear fog light

I5JB0A910975-04

www.cargeek.ir

www.CarGeek.ir


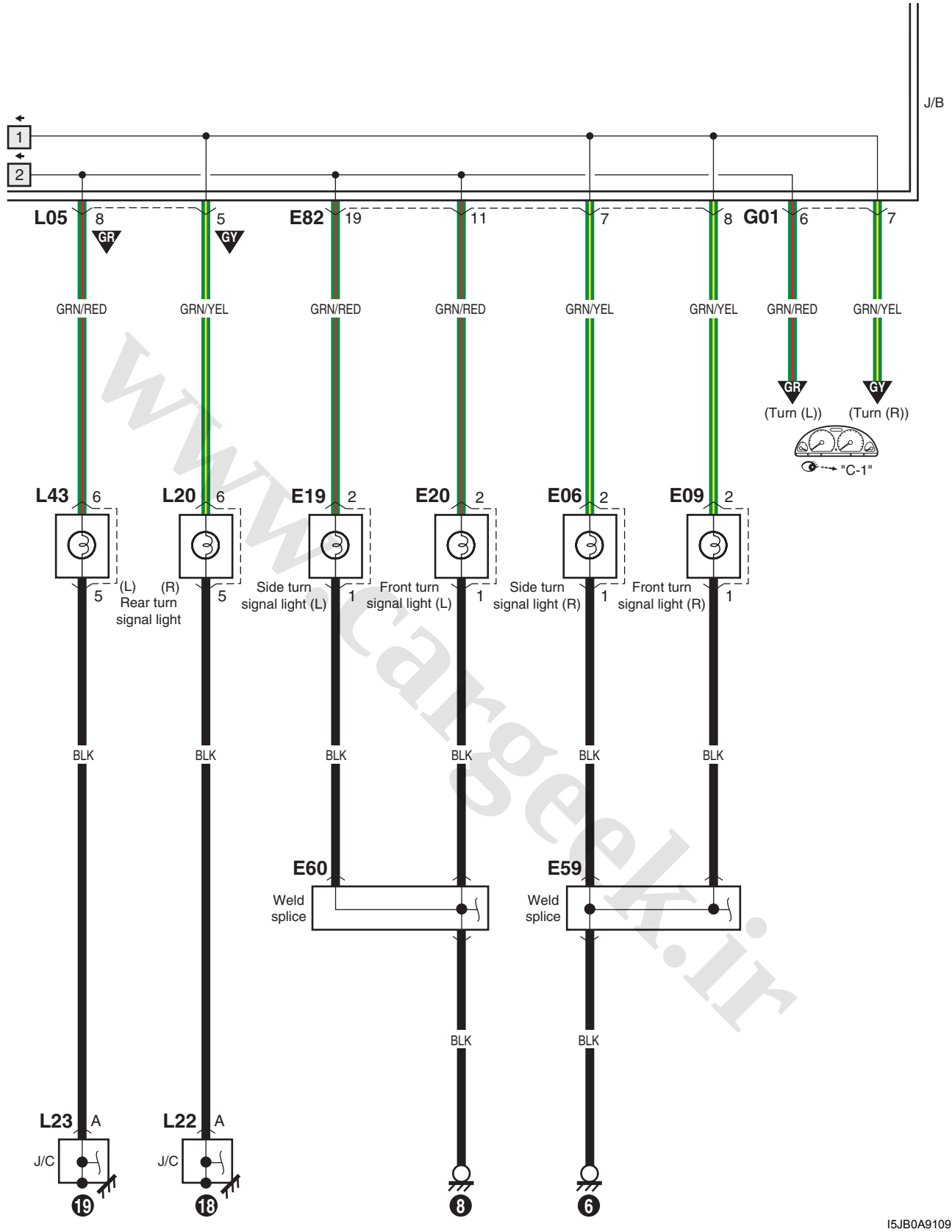


I5JB0A910976-02

www.cargeek.ir

www.CarGeek.ir

## D-7 Brake Light System Circuit Diagram

S5JB0A910E025

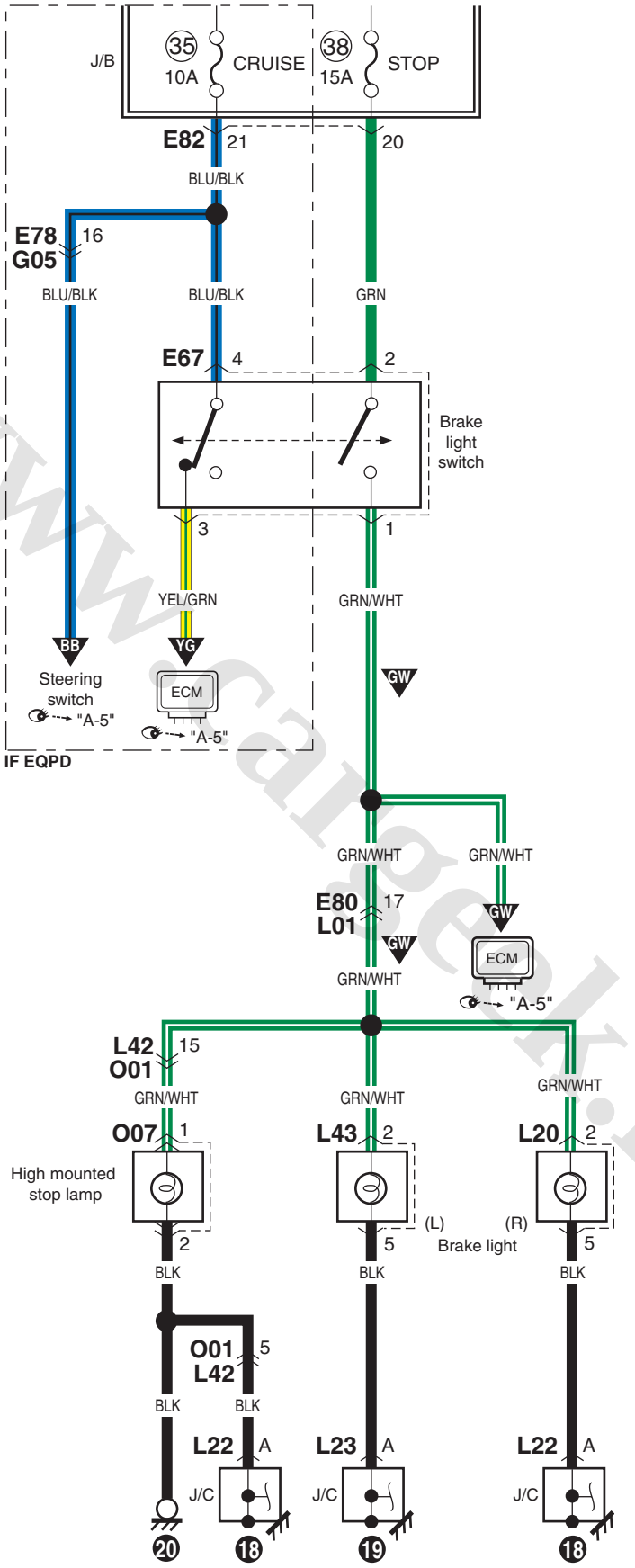


I5JB0A910977-03

www.cargeek.ir

## D-8 Back-Up Light System Circuit Diagram

S5JB0A910E026

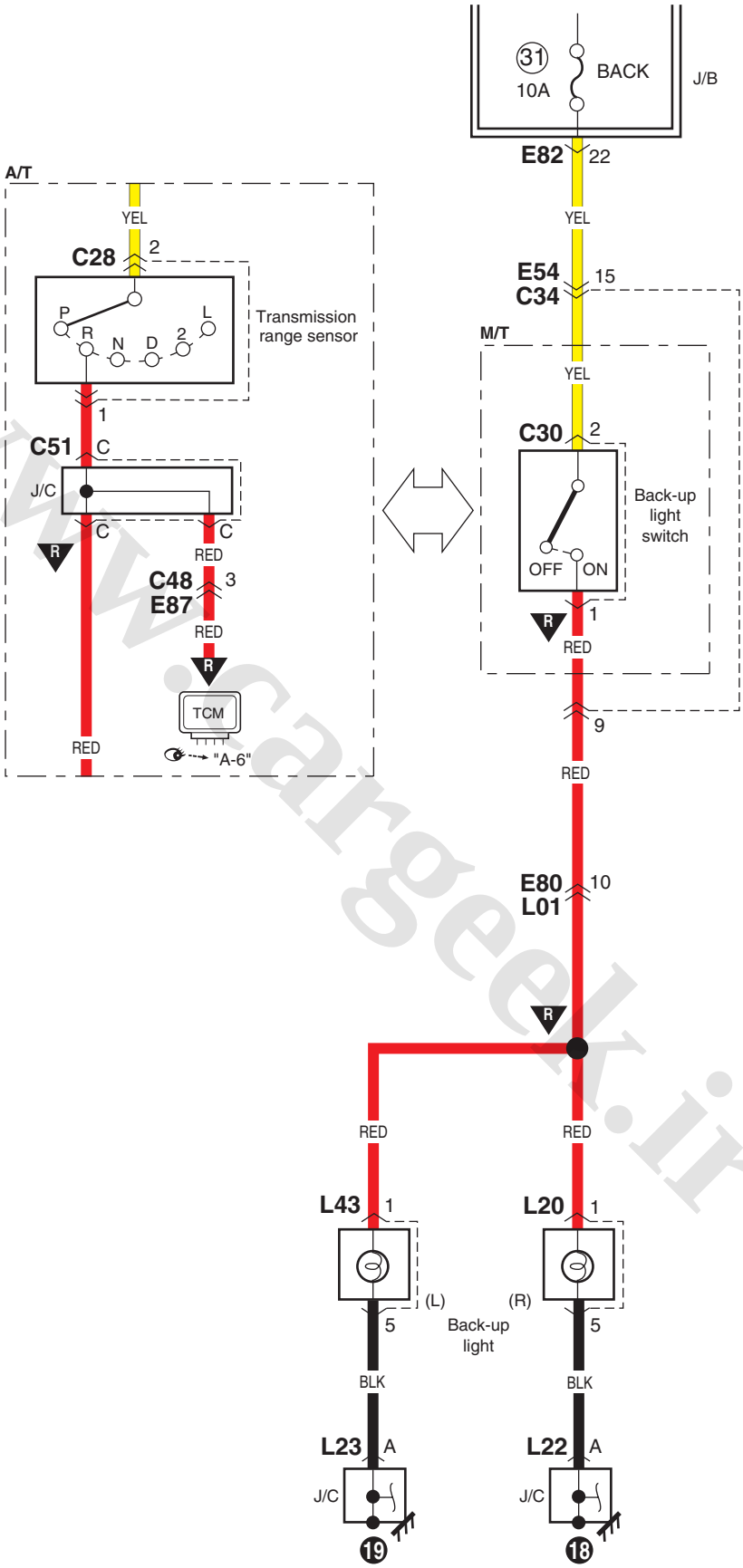


I5JB0A910978-02

www.CarGeek.ir

## D-9 Headlight Beam Leveling System Circuit Diagram (Manual Leveling)

S5JB0A910E037

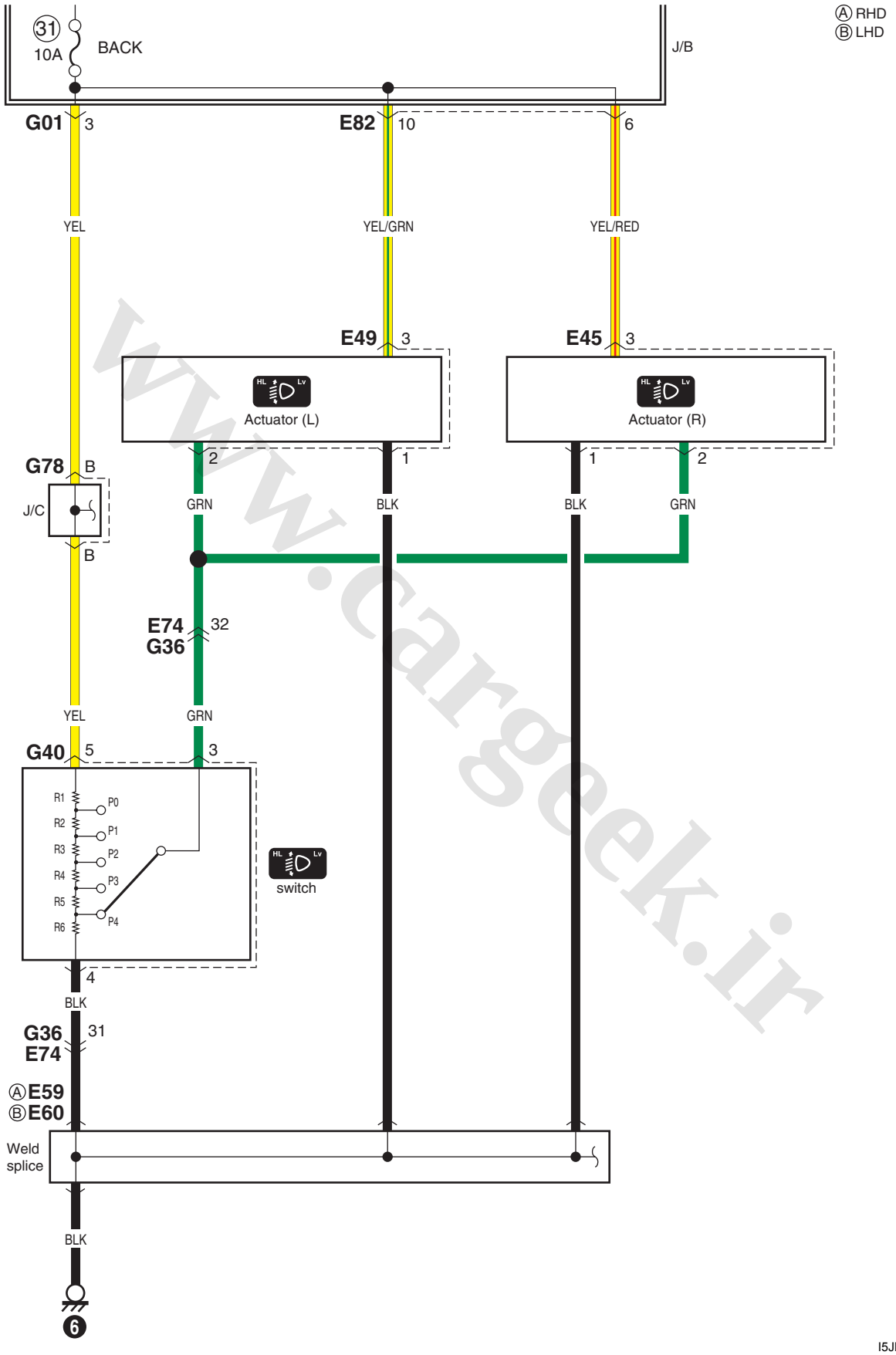


I5JB0A910979-04

www.cargeek.ir

## D-9 Headlight Beam Leveling System Circuit Diagram (Auto Leveling)

S5JB0A910E046

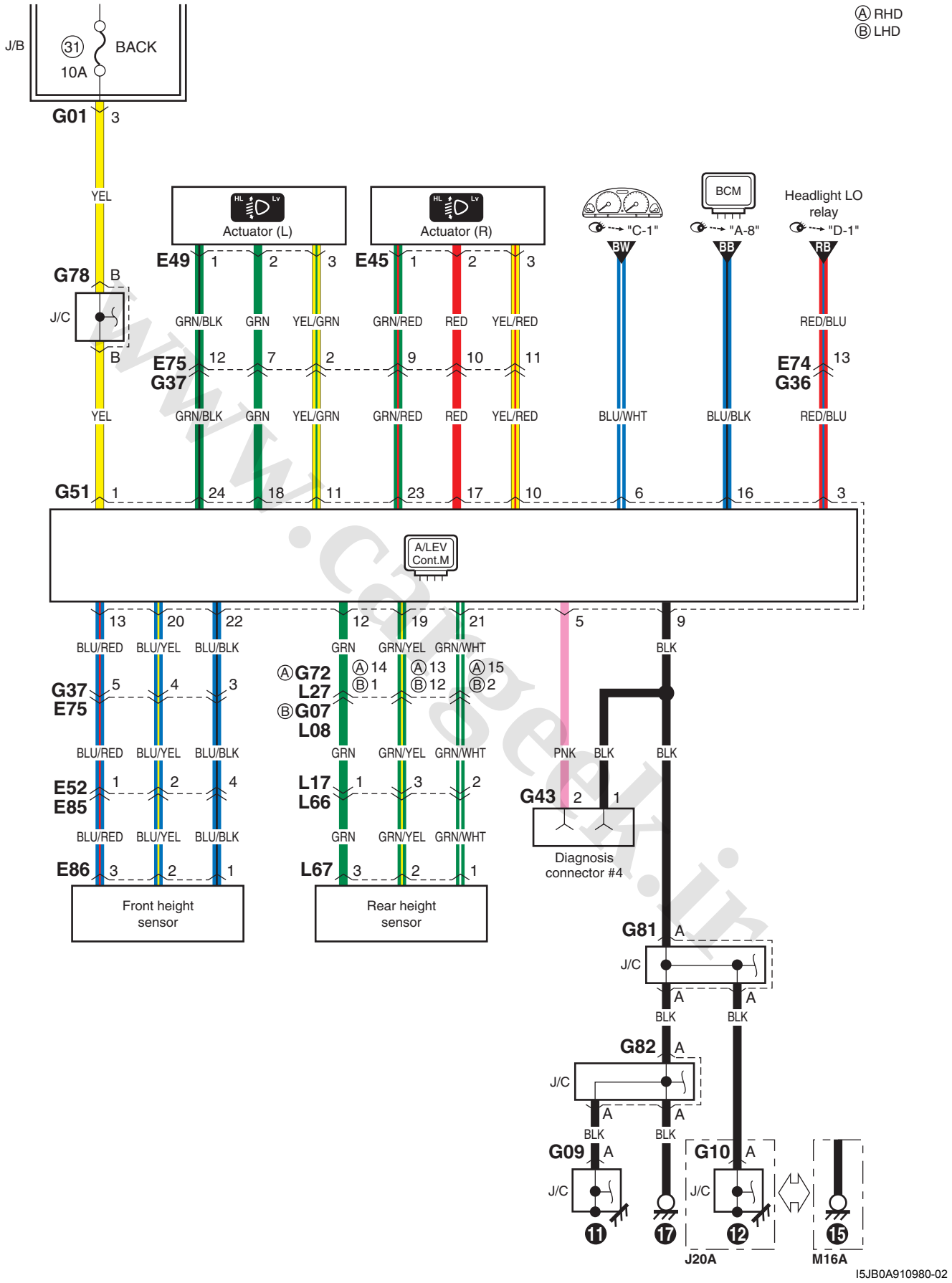


I5JB0A910980-02

www.CarGeek.ir

## D-10 Rear Fog Light Circuit Diagram

S5JB0A910E038

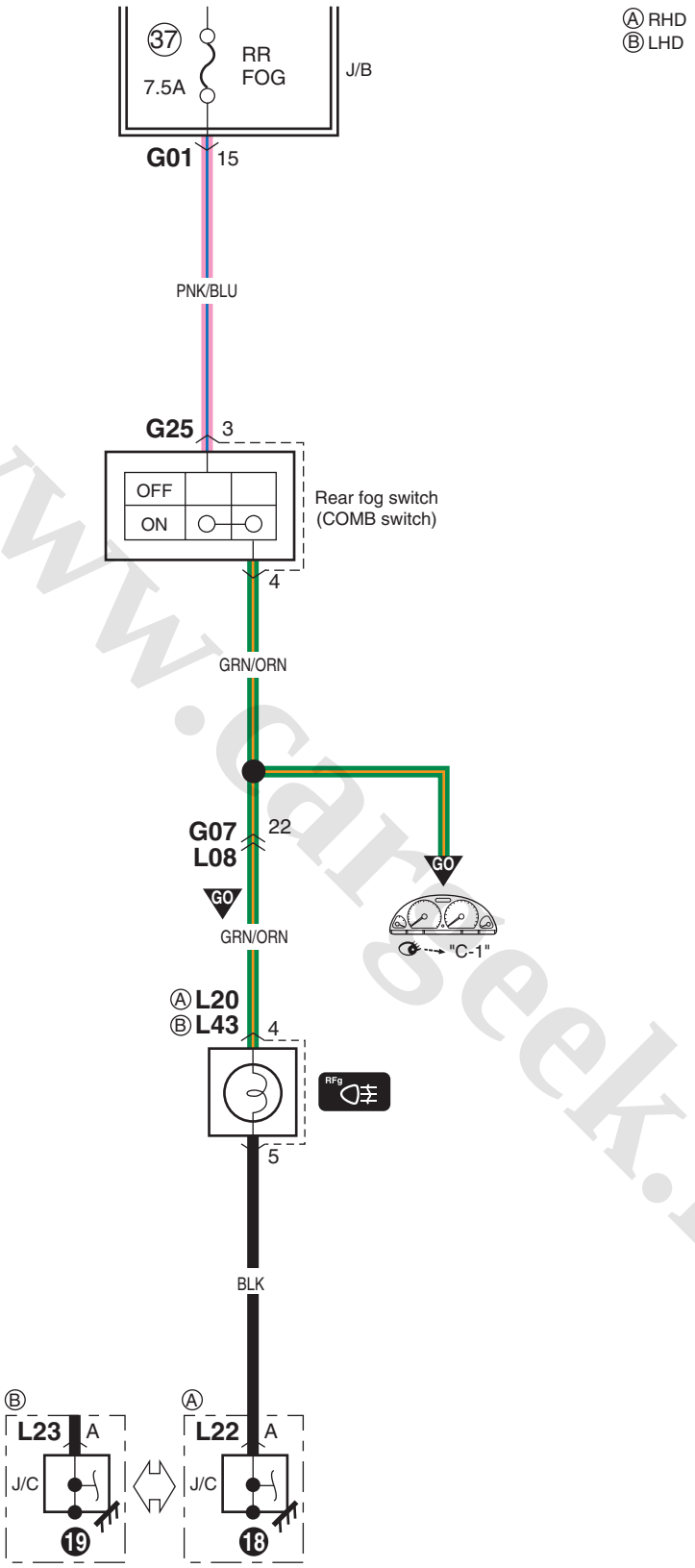


I5JB0A910981-02

www.cargeek.ir

## E-2 Auto A/C System Circuit Diagram

S5JB0A910E047

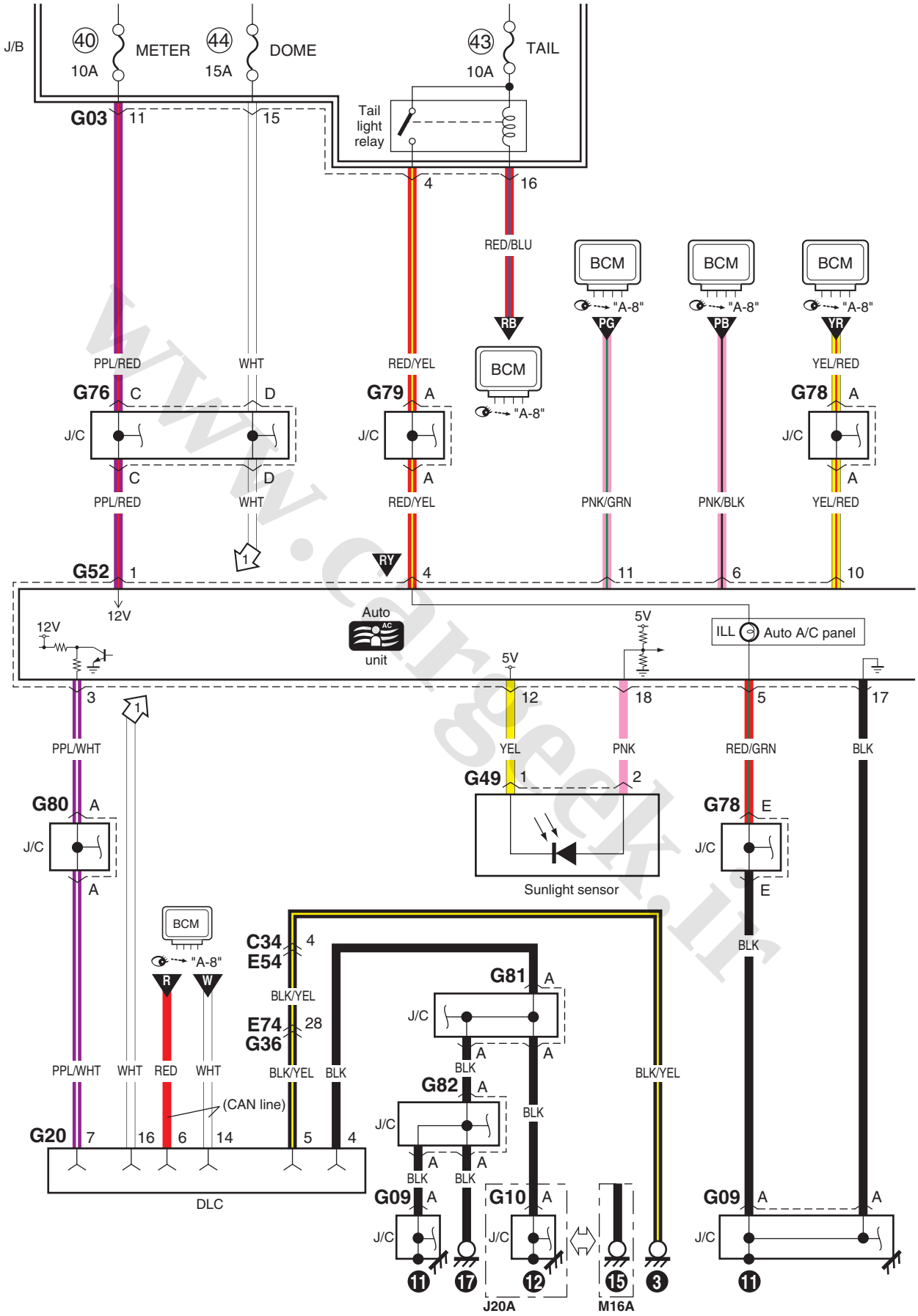


I5JB0A910982-05

www.CarGeek.ir

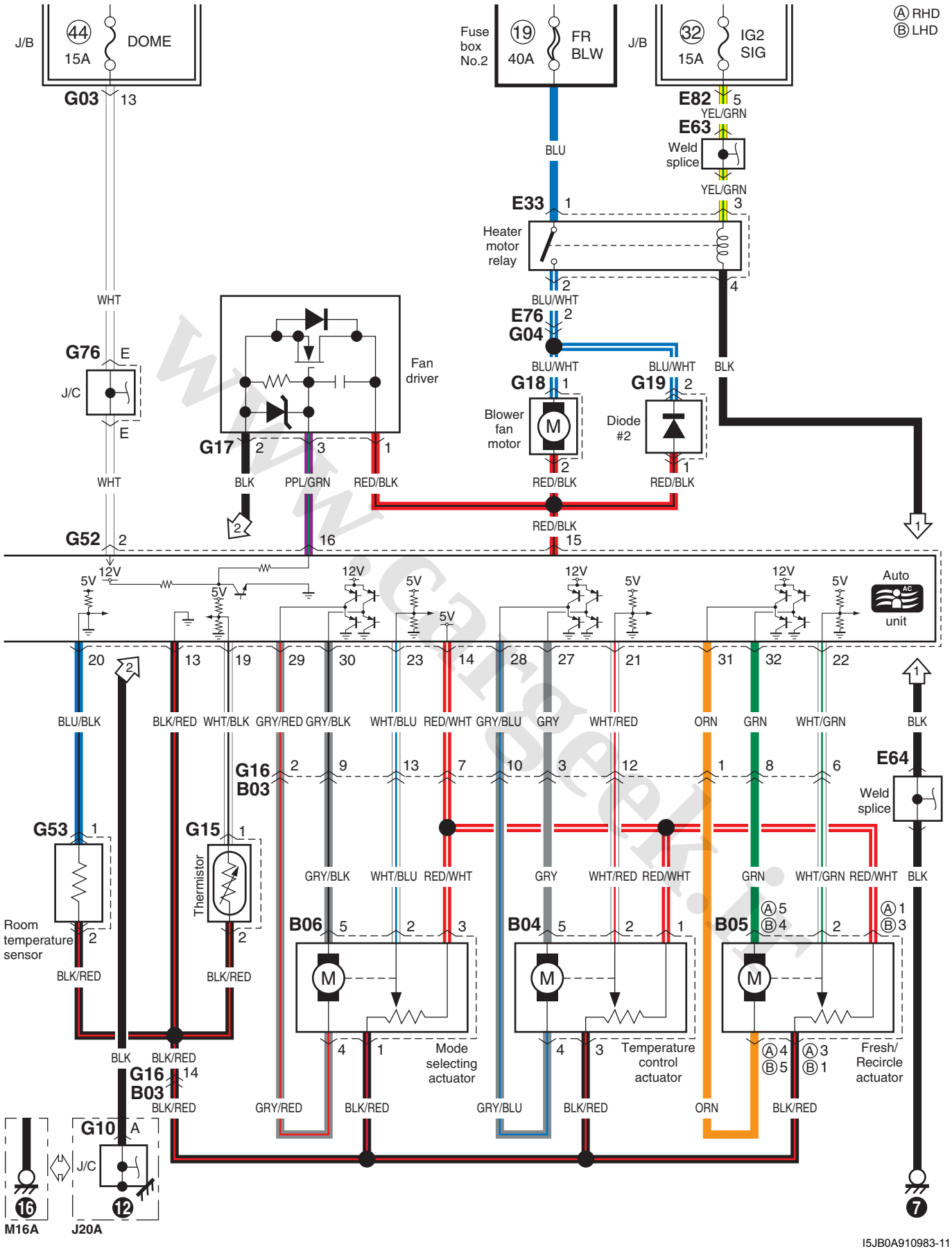


www.cargeek.ir

## F-1 Air-Bag System Circuit Diagram (Without side A/B and Curtain A/B)

S5JB0A910E028

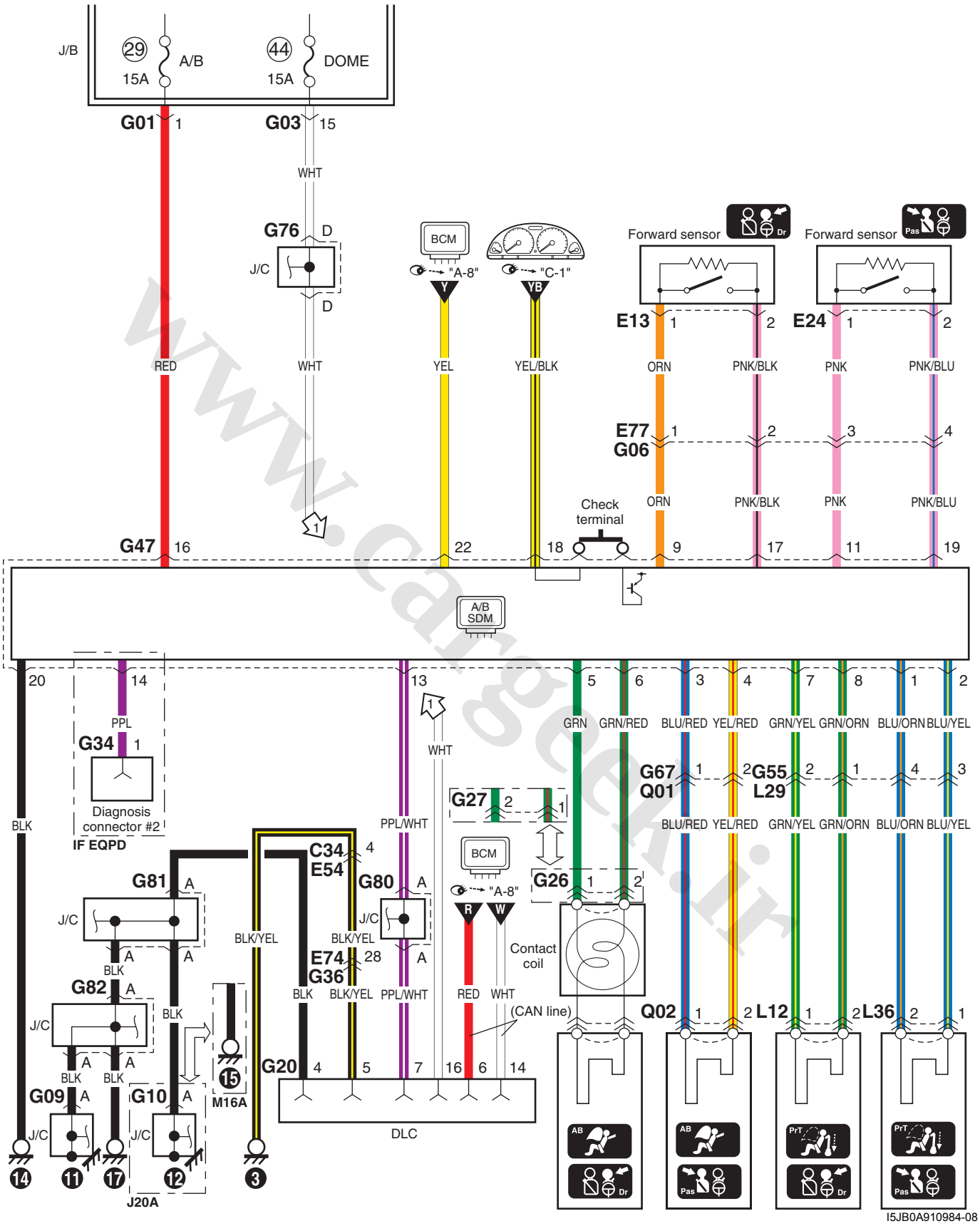

www.CarGeek.ir

## F-1 Air-Bag System Circuit Diagram (With side A/B and Curtain A/B)

S5JB0A910E048

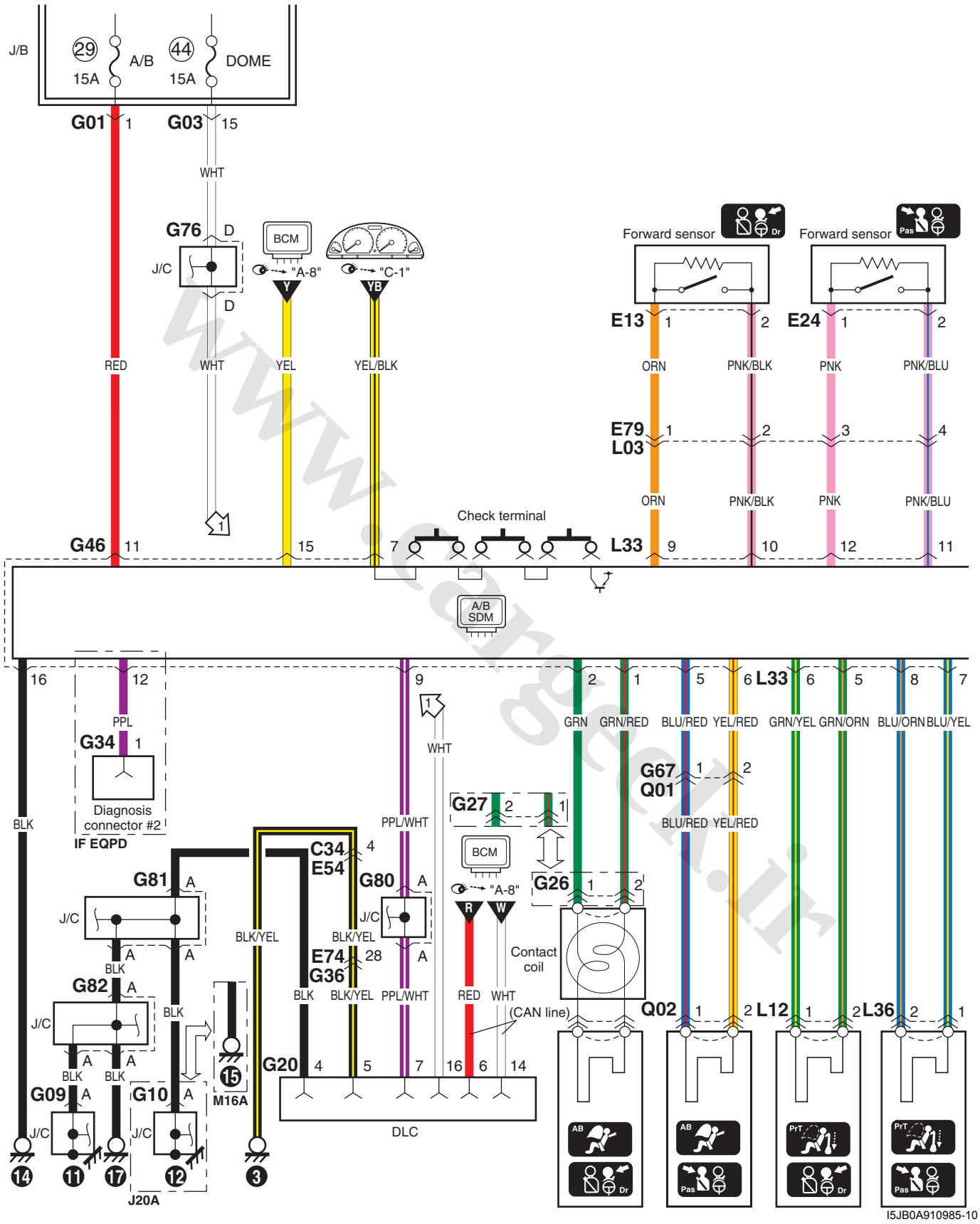


I5JB0A910985-10

www.cargeek.ir

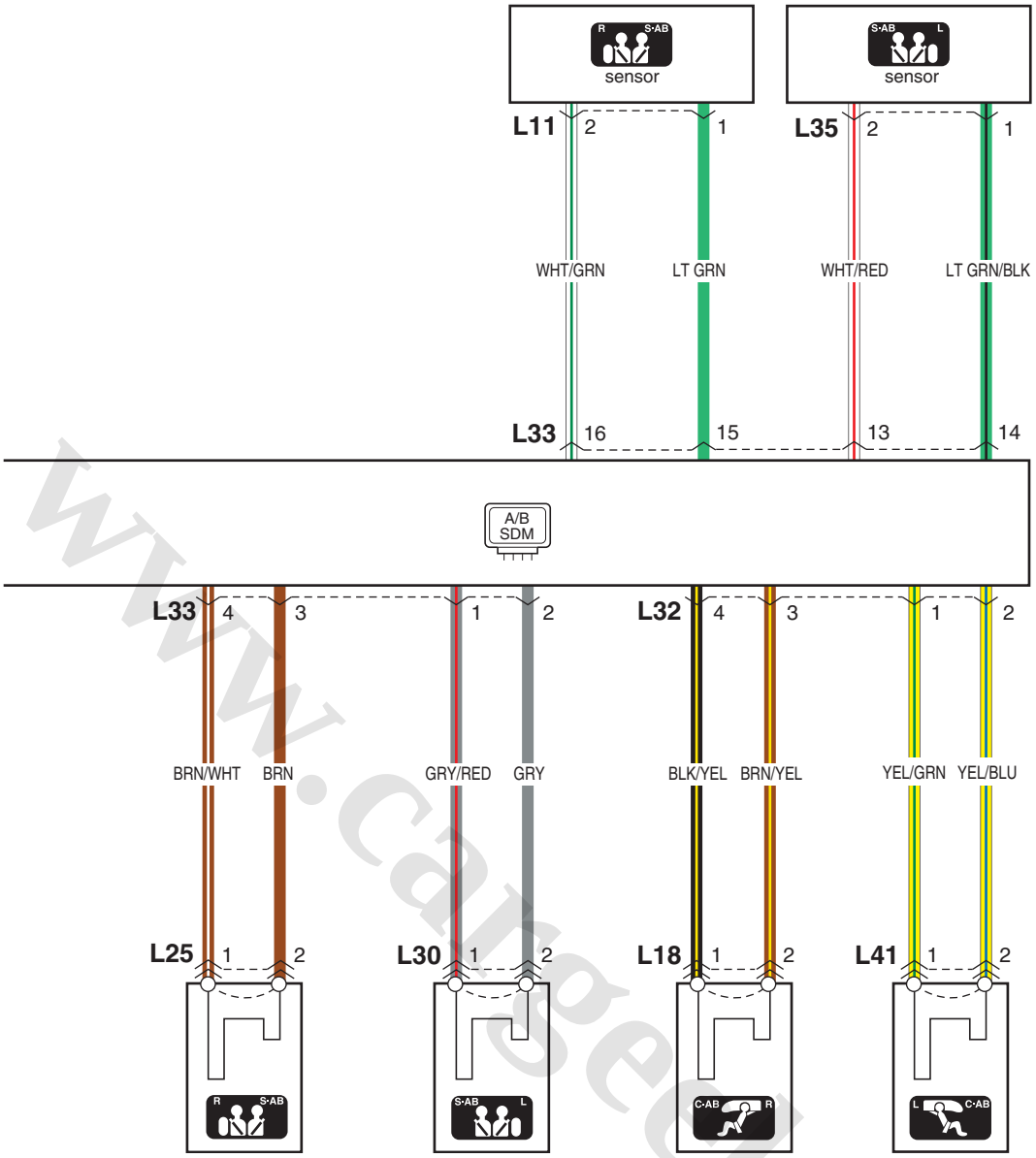


I5JB0A910986-05

www.cargeek.ir

www.CarGeek.ir

## F-2 Anti-Lock Brake System Circuit Diagram

S5JB0A910E029

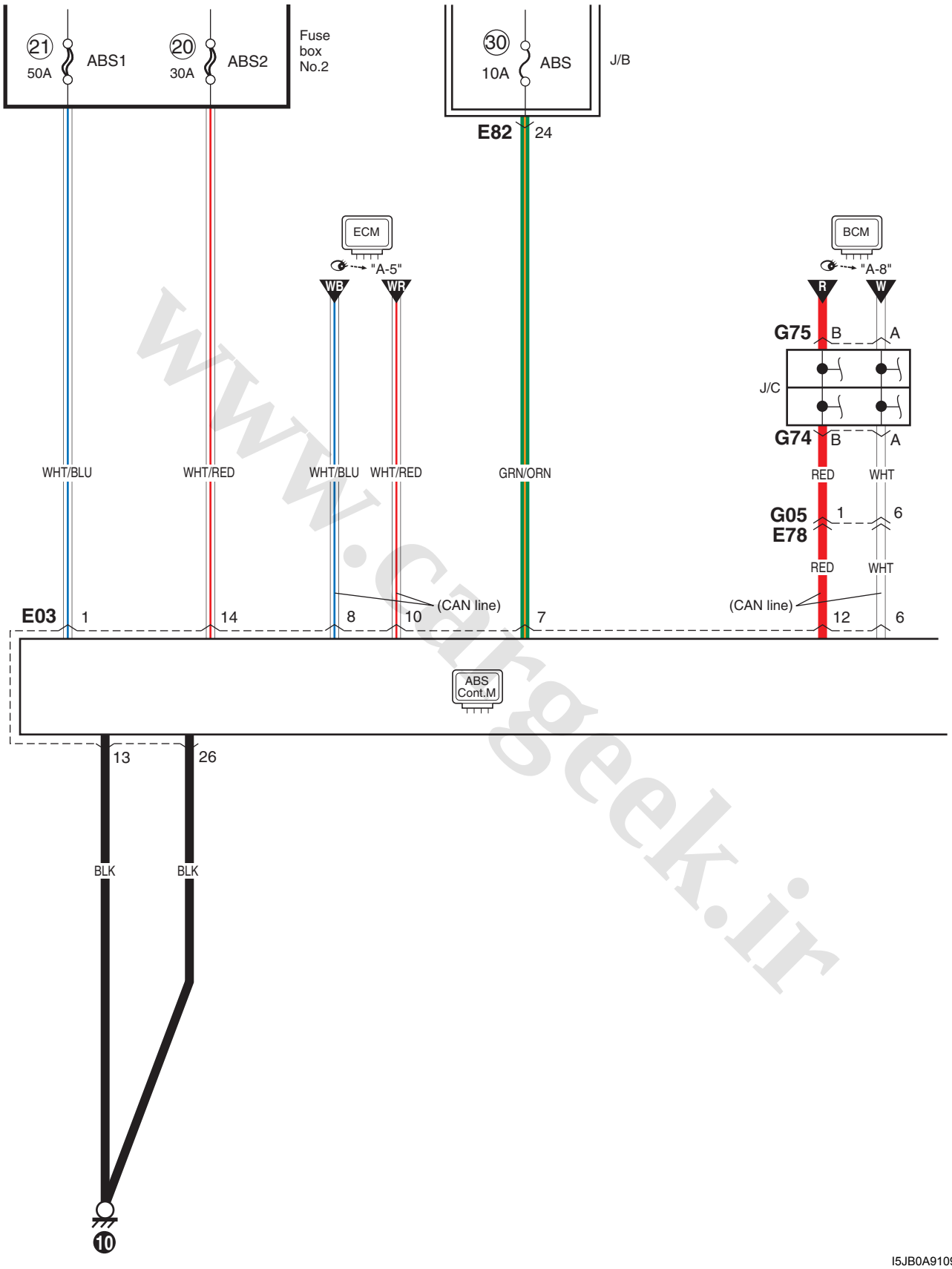


I5JB0A910987-10

www.cargeek.ir

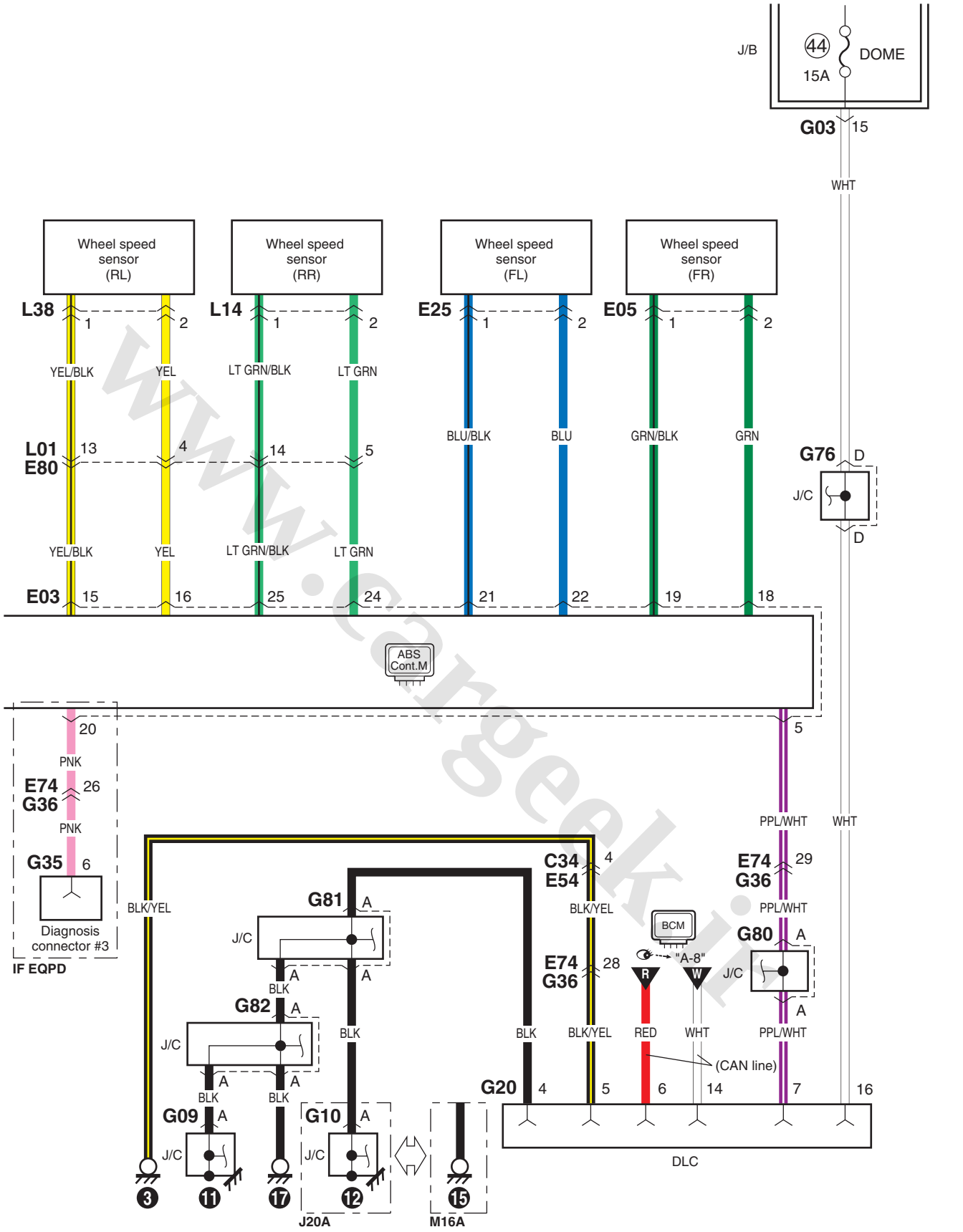
J/B
44
DOME
15A
G03
15
WHT
Wheel speed sensor (RL)
Wheel speed sensor (RR)
Wheel speed sensor (FL)
Wheel speed sensor (FR)
L38
L14
E25
E05
YEL/BLK
YEL
LT GRN/BLK
LT GRN
BLU/BLK
BLU
GRN/BLK
GRN
L01
E80
G76
J/C
E03
ABS Cont.M
PNK
E74
G36
G35
Diagnosis connector #3
IF EQPD
PPL/WHT
C34
E54
BLK/YEL
G81
G82
G09
G10
G80
BCM
"A-8"
RED
(CAN line)
G20
DLC
J20A
M16A
I5JB0A910988-05

www.CarGeek.ir

## G-1 Audio System Circuit Diagram

S5JB0A910E031

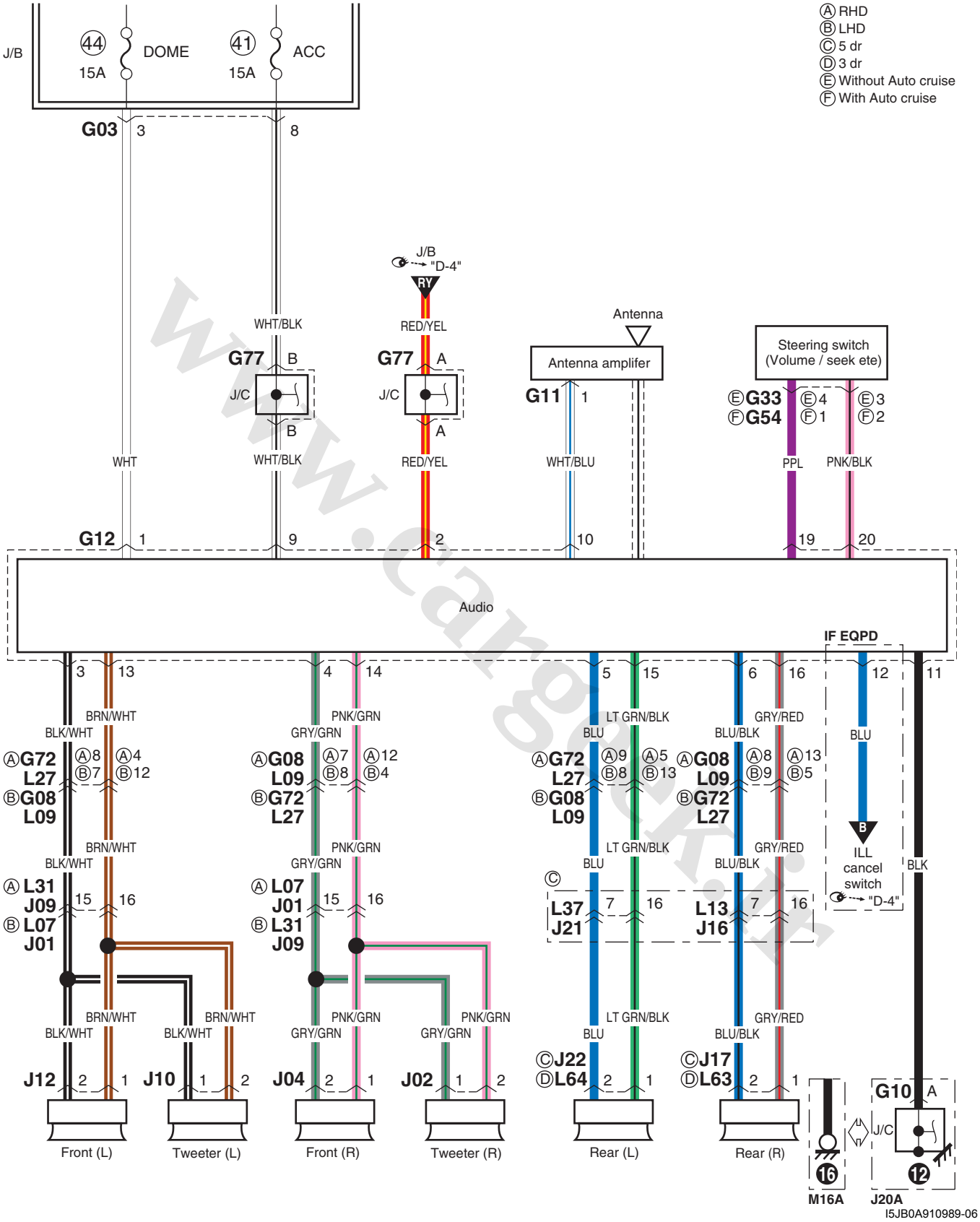


www.cargeek.ir

## G-2 Multi Information Display / Accessory Socket System Circuit Diagram

S5JB0A910E032

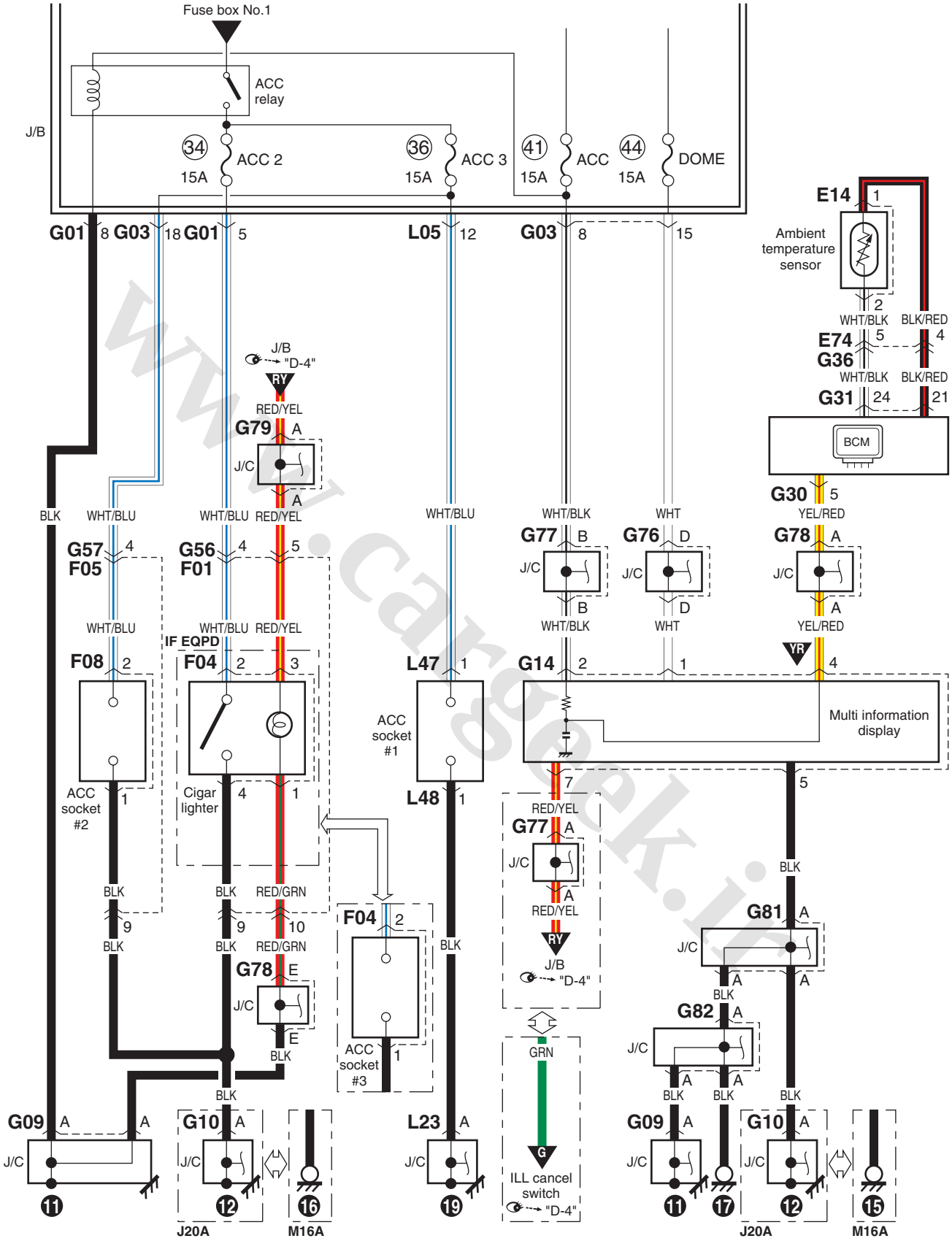

www.CarGeek.ir

## G-4 Navigation System Circuit Diagram

S5JB0A910E039

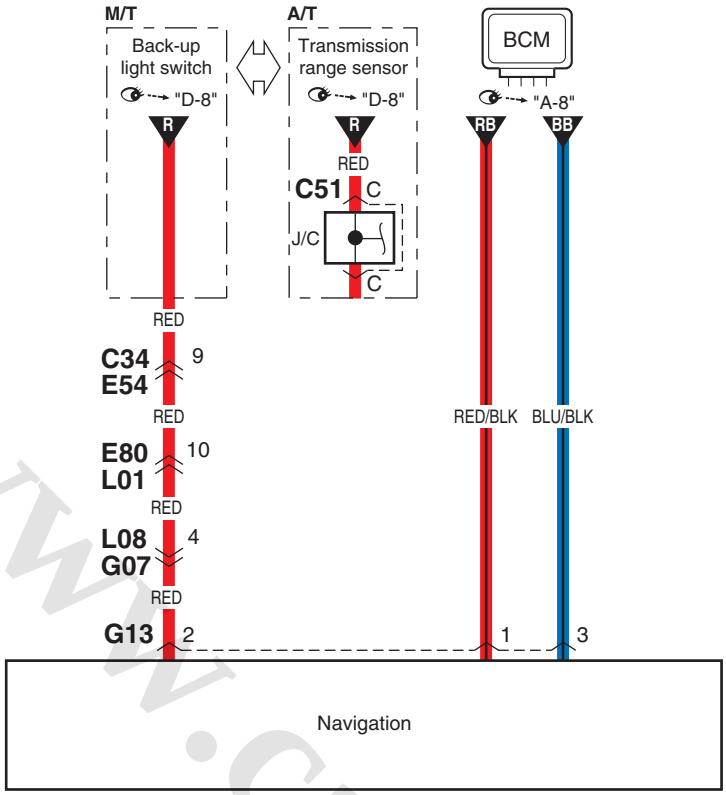


I5JB0A910991-03

www.cargeek.ir

www.cargeek.ir

# List of Connectors

## List of Connectors

S5JB0A910F009

Refer to “B Connector: ”.
Refer to “C Connector: ”.
Refer to “E Connector: ”.
Refer to “F Connector: ”.
Refer to “G Connector: ”.
Refer to “J Connector: ”.
Refer to “K Connector: ”.
Refer to “L Connector: ”.
Refer to “O Connector: ”.
Refer to “Q Connector: ”.
Refer to “R Connector: ”.

## B Connector

S5JB0A910F010

| | | | | |
|---|---|---|---|---|
| B01 (TO E17)<br>MCONM010033-01<br>J20A | B02<br>MCONF010076-01<br>J20A | B03 (TO G16)<br>7 6 5 4 3 2 1<br>14 13 12 11 10 9 8<br>MCONM140005-02 | B04<br>1 2 3 4 5<br>MCONF050021-01 | B05<br>1 2 3 4 5<br>MCONF050021-01 |
| B06<br>1 2 3 4 5<br>MCONF050021-01 | | | | |

## C Connector

S5JB0A910F001

| | | | | | |
|---|---|---|---|---|---|
| C01<br>1<br>MCONF010070-01 | C02<br>1<br>MCONF010083-01 | C03<br>1<br>MCONF010084-01 | C04<br>1 2<br>MCONF020065-01 | C05<br>1 2<br>MCONF020065-01 | C06<br>1 2<br>MCONF020065-01 |
| C07<br>1 2<br>MCONF020065-01 | C08<br>1 2 3<br>MCONF030053-01 | C09<br>1 2<br>MCONF020042-01 | C10<br>1 2 3<br>4 5 6<br>MCONF060018-01 | C11<br>1 2 3 4 5 6<br>MCONF060068-01 | C12<br>1 2 3<br>MCONF030030-01 |
| C13<br>1 2 3 4 5<br>MCONF050025-01 | C14<br>1 2<br>MCONF020042-01 | C15<br>1 2<br>3 4<br>MCONF040008-01 | C17<br>1<br>MCONF010076-01<br>M16A | C18<br>1<br>MCONF010030-01 | C19<br>2 1<br>MCONM020016-01<br>M16A |
| C20<br>1 2 3<br>MCONF030053-01<br>M16A | C20<br>1 2 3<br>MCONF030038-01<br>J20A | C21<br>1 2<br>3 4<br>MCONF040048-01 | C22<br>1<br>MCONF010077-01 | C23<br>1<br>MCONF010060-01 | C24<br>1<br>MCONF010078-01 |

www.cargeek.ir

www.CarGeek.ir

| | | | | | |
|---|---|---|---|---|---|
| C25<br> <br>MCONF020150-01<br>A/T | C26<br> <br>MCONF010054-01 | C27<br> <br>MCONF020150-01<br>A/T | C28<br> 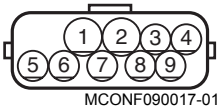 <br>MCONF090017-01<br>A/T | C29<br> 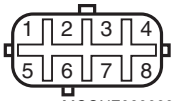 <br>MCONF080039-01<br>A/T | C30<br> <br>MCONF020042-01 |
| C31<br> <br>MCONF010078-01 | C32<br> <br>MCONF010085-01 | C33<br> <br>MCONF010001-01 | C34 (TO E54)<br> 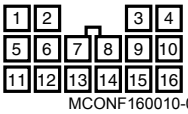 <br>MCONF160010-01 | C35 (TO E55)<br> 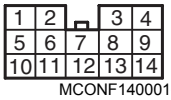 <br>MCONF140001-01 | C36<br> 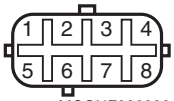 <br>MCONF080039-01 |
| C37<br> 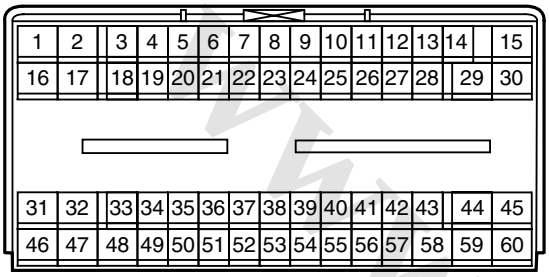 <br>MCONF600003-01 | | | C38<br> <br>MCONF030056-01<br>J20A | C39<br> <br>MCONF010081-01<br>J20A | |
| C40<br> <br>MCONF030055-01<br>M16A | C40<br> 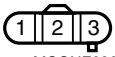 <br>MCONF030053-01<br>J20A | C41<br> <br>MCONF030055-01<br>M16A | C41<br> 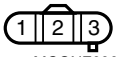 <br>MCONF030053-01<br>J20A | C42<br> 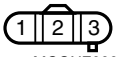 <br>MCONF030053-01<br>J20A | C43<br> 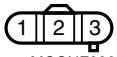 <br>MCONF030053-01<br>J20A |
| C46<br> <br>MCONF020063-01<br>J20A | C47<br> <br>MCONF020066-01 | C48 (TO E87)<br> 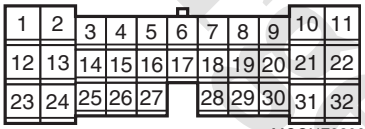 <br>MCONF320006-01<br>J20A | | C49 (TO E88)<br> 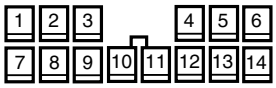 <br>MCONF140008-01<br>J20A | |
| C50 (TO E89)<br> <br>MCONF040112-01<br>J20A | C51<br> 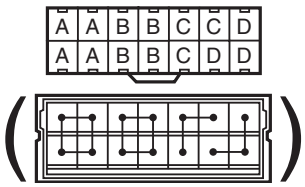 <br>MCONF140021-01<br>J20A | | C52<br> <br>MCONF020231-01<br>J20A | C53<br> <br>MCONF020231-01<br>J20A | C54<br> 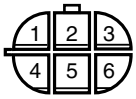 <br>MCONF060061-01<br>J20A |
| C55<br> <br><br>MCONN000002-01 | C56<br> <br><br>MCONN000002-01 | | | | |

www.cargeek.ir

## E Connector

S5JB0A910F002

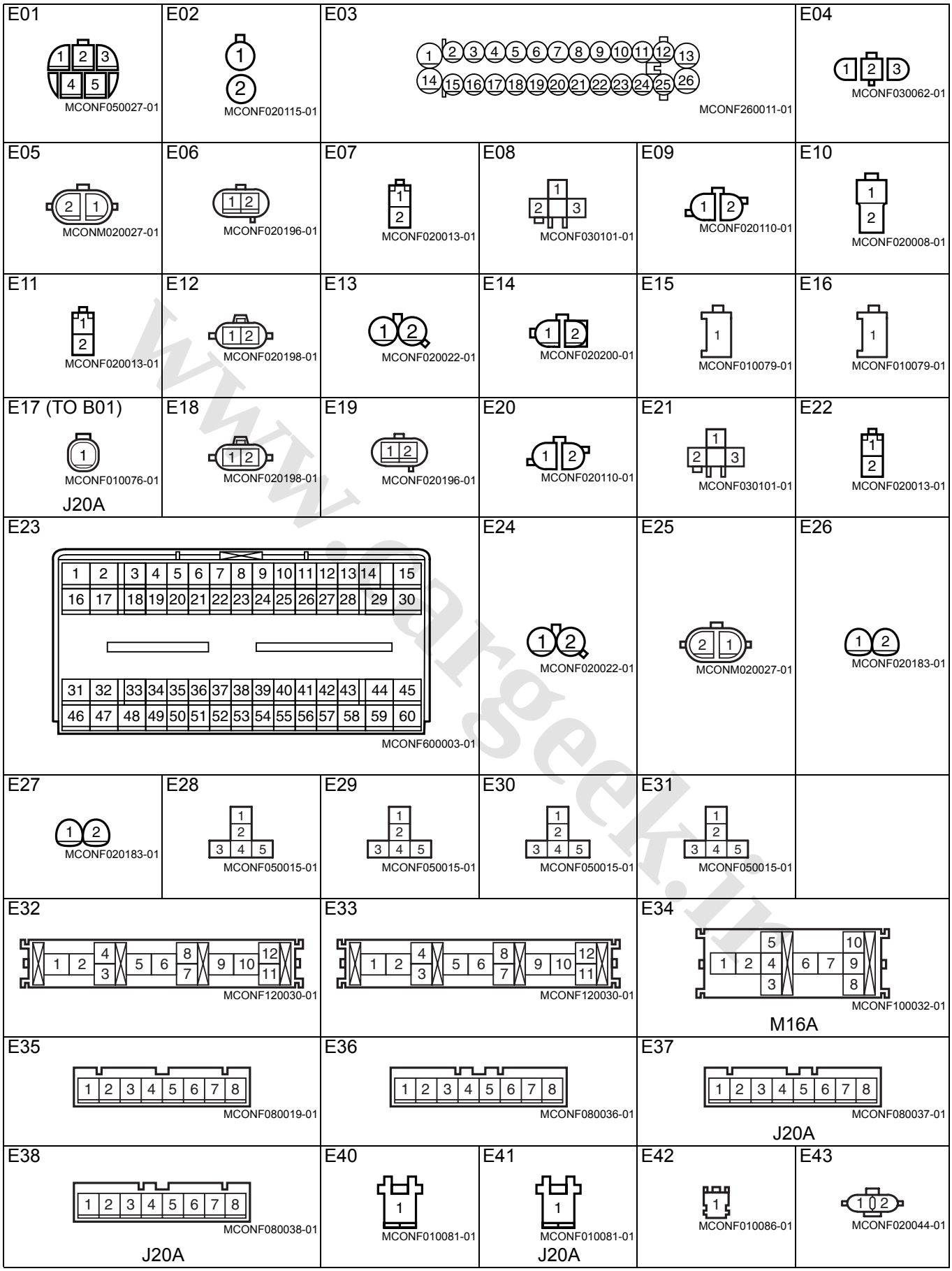


www.cargeek.ir

www.CarGeek.ir

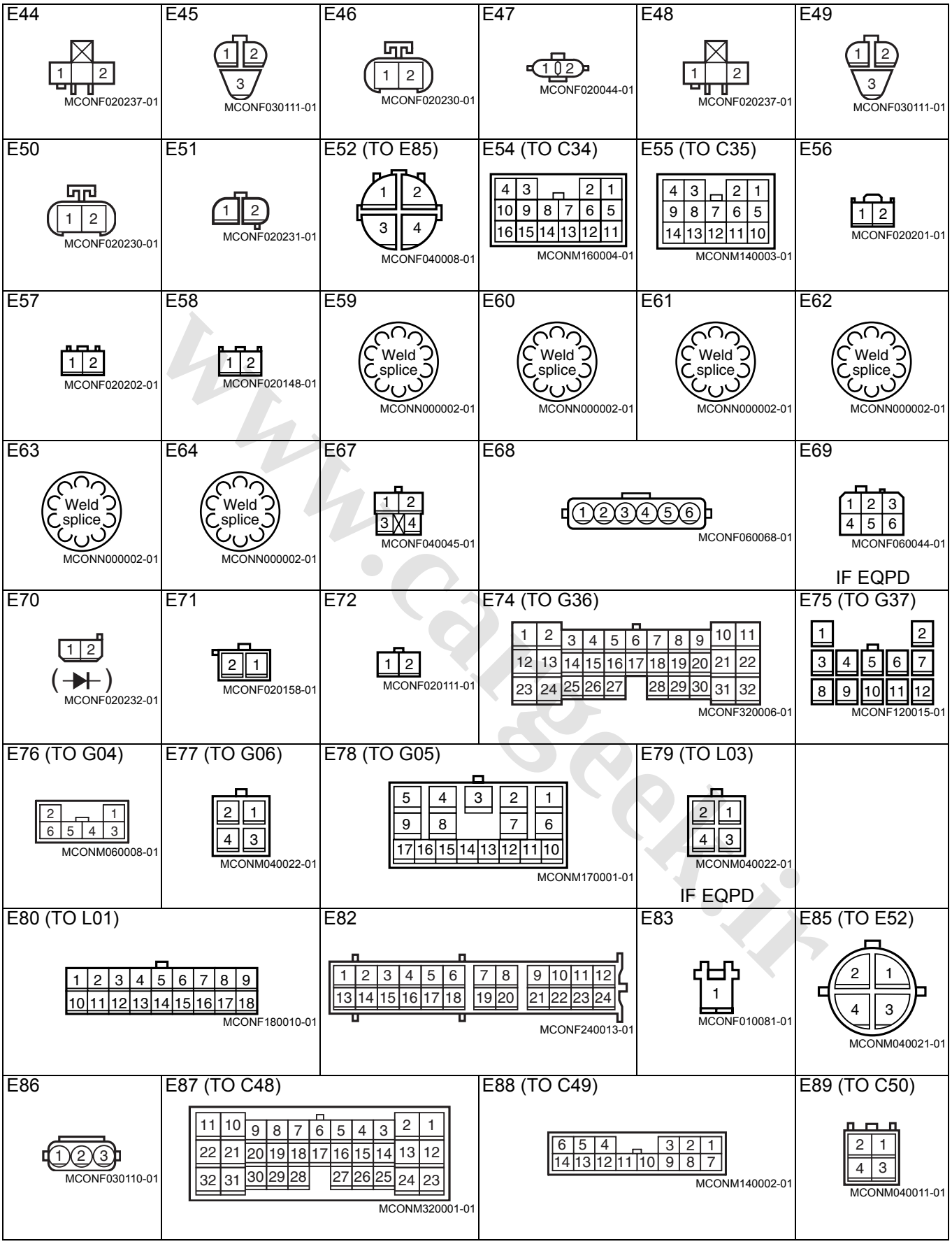


www.cargeek.ir

E90 (TO G71)

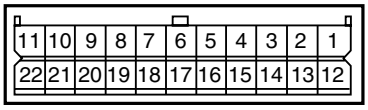


MCONM220003-01

E91

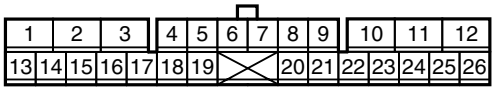


MCONF260010-01

E92

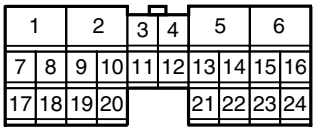


MCONF240011-01

A/T

E93

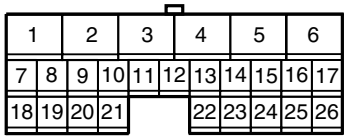


MCONF260014-01

A/T

## F Connector

S5JB0A910F011

F01 (TO G56)

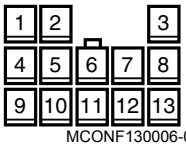


MCONF130006-01

F02

MCONF060046-01

F03

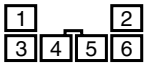


MCONF060046-01

LHD A/T

F04

MCONF040095-01

F05 (TO G57)

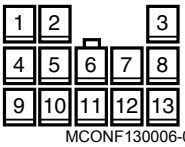


MCONF130006-01

F06

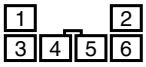


MCONF060046-01

F07

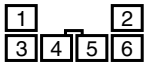


MCONF060046-01

RHD A/T

F08

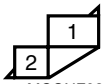


MCONF020116-01

## G Connector

S5JB0A910F003

G01

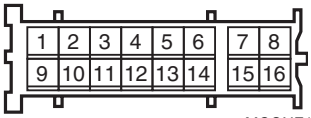


MCONF160037-01

G02

MCONF040046-01

G03

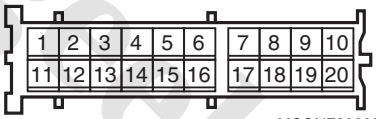


MCONF200024-01

G04 (TO E76)

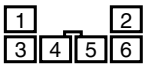


MCONF060046-01

G05 (TO E78)

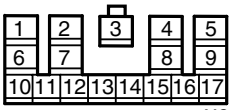


MCONF170005-01

G06 (TO E77)

MCONF040093-01

G07 (TO L08)

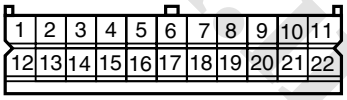


MCONF220010-01

G08 (TO L09)

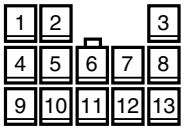


MCONF130006-01

G09

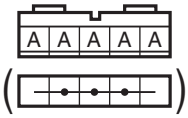


MCONF050038-01

G10

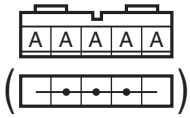


MCONF050038-01

G11

MCONM010017-01

G12

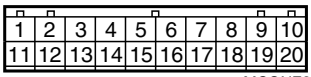


MCONF200014-01

G13

MCONF050021-01

G14

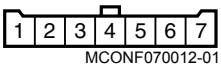


MCONF070012-01

G15

MCONF020008-01

G16 (TO B03)

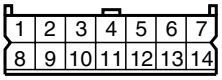


MCONF140012-01

G17

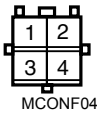


MCONF040046-01

G18

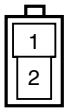


MCONM020001-01

G19

MCONF020232-01

www.cargeek.ir

www.CarGeek.ir

G20

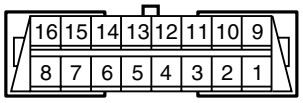


MCONM160003-01

G21

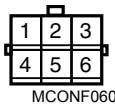


MCONF060063-01

G22

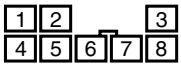


MCONF080014-01

G23

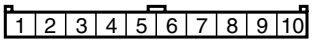


MCONF100038-01

G24

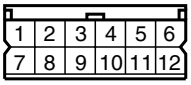


MCONF120022-01

G25

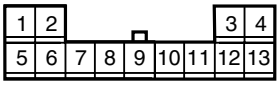


MCONF130010-01

G26

MCONF020212-01

G27

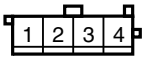


MCONF040099-01

G28

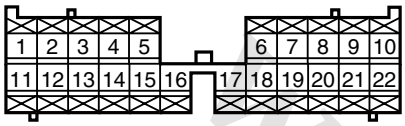


MCONF220006-01

G29

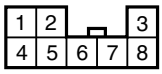


MCONF080002-01

G30

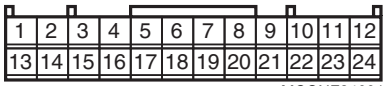


MCONF240014-01

G31

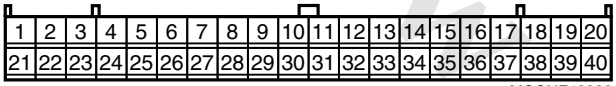


MCONF400001-01

G32

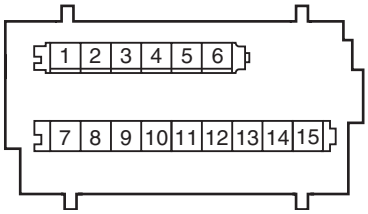


MCONF150005-01

G33

MCONF060053-01

G34

MCONF020084-01

G35

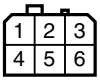


MCONF060044-01

IF EQPD

G36 (TO E74)

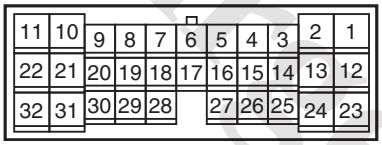


MCONM320001-01

G37 (TO E75)

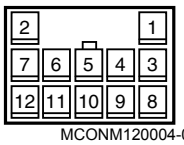


MCONM120004-01

G38

MCONF010087-01

G39

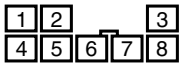


MCONF080014-01

G40

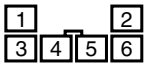


MCONF060046-01

G41

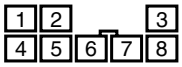


MCONF080014-01

G43

MCONF020151-01

G44

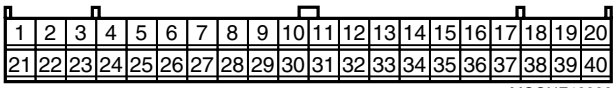


MCONF400001-01

G46

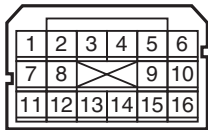


MCONF160038-01

IF EQPD

G47

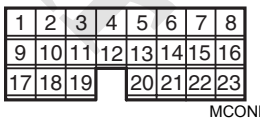


MCONF230001-01

G48

MCONF060046-01

G49

MCONF020084-01

G50

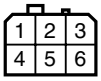


MCONF060044-01

G51

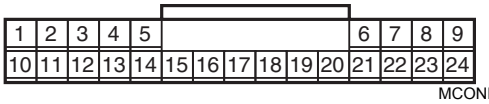


MCONF240015-01

G52

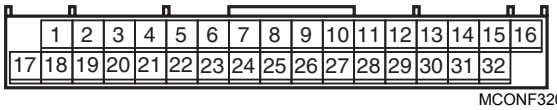


MCONF320007-01

G53

MCONF020151-01

G54

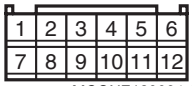


MCONF120034-01

G55 (TO L29)

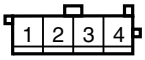


MCONF040099-01

www.cargeek.ir

G56 (TO F01)

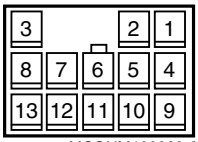


MCONM130003-01

G57 (TO F05)

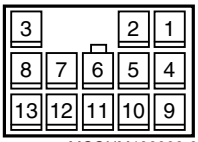


MCONM130003-01

G58

MCONF020140-01

G59

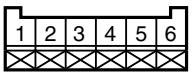


MCONF060040-01

G62

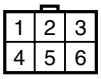


MCONF060003-01

G63

MCONF010010-01

G64

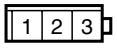


MCONF030078-01

G67 (TO Q01)

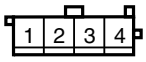


MCONF040099-01

G69

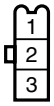


MCONF030087-01

IF EQPD

G71 (TO E90)

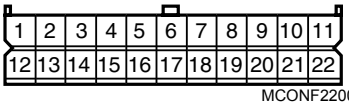


MCONF220009-01

G72 (TO L27)

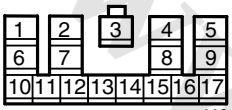


MCONF170005-01

G73 (TO L28)

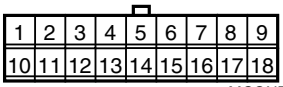


MCONF180010-01

G74

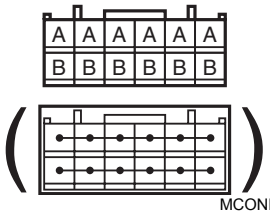


MCONF120031-01

G75

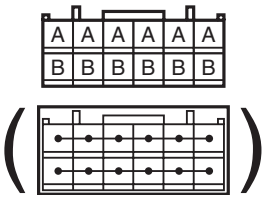


MCONF120031-01

G76

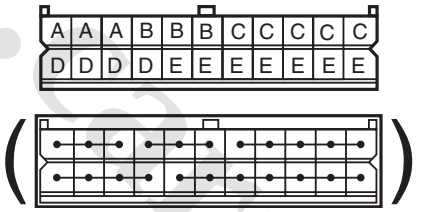


MCONF220013-01

G77

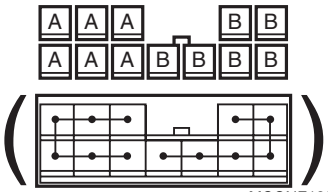


MCONF120032-01

G78

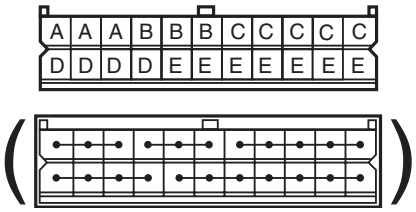


MCONF220013-01

G79

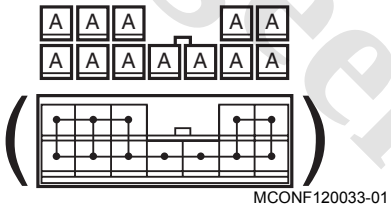


MCONF120033-01

G80

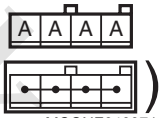


MCONF040071-01

G81

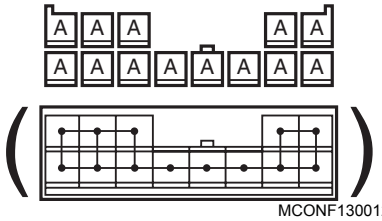


MCONF130012-01

G82

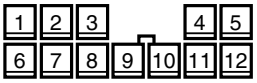


MCONF120016-01

www.CarGeek.ir

www.CarGeek.ir

## J Connector

S5JB0A910F004

J01 (TO L07)

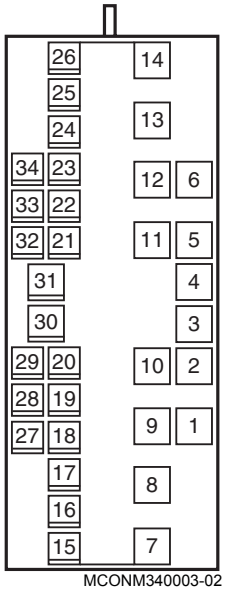


J02

J03

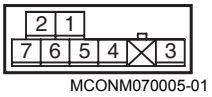


J04

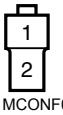


J05

J06

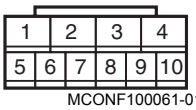


J07

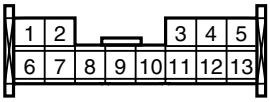


J08

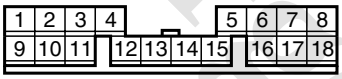


J09 (TO L31)

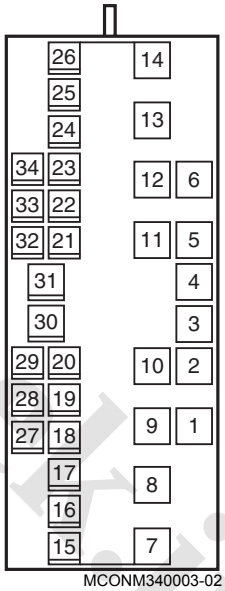


J10

J11

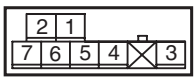


J12

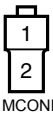


J13

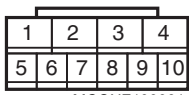


J14

J15

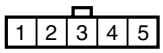


J16 (TO L13)

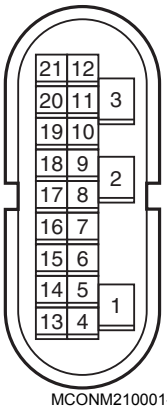


www.cargeek.ir

| | | | | | |
|---|---|---|---|---|---|
| J17 MCONF020008-01 | J18 MCONF020236-01 | J19 MCONF050021-01 | J20 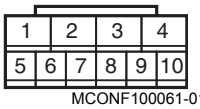 MCONF100061-01 | J21 (TO L37) 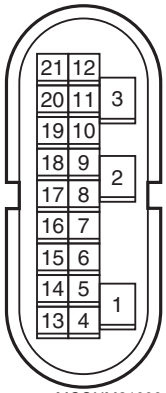 MCONM210001-01 | J22 MCONF020008-01 |
| J23 MCONF020236-01 | J24 MCONF050001-01 | J25 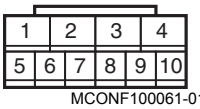 MCONF100061-01 | J26 MCONM020018-01 | J27 MCONM020016-01 | J28 MCONM020018-01 |
| J29 MCONM020016-01 | J31 MCONM020049-01 | J32 MCONM020049-01 | | | |

## K Connector

S5JB0A910F005

| | | | | | |
|---|---|---|---|---|---|
| K01 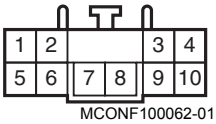 MCONF100062-01 | K02 MCONF030102-01 | K03 MCONF030102-01 | K04 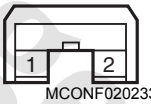 MCONF020233-01 | K05 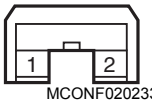 MCONF020233-01 | K06 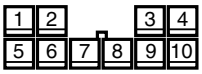 MCONF100054-01 |
| K07 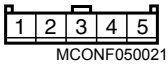 MCONF050021-01 | | | | | |

www.cargeek.ir

www.CarGeek.ir

## L Connector

S5JB0A910F006

L01 (TO E80)

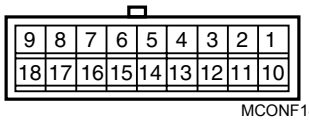

MCONF180009-01

L03 (TO E79)

MCONF040095-01

IF EQPD

L04

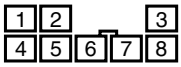

MCONF080014-01

L05

MCONF130013-01

L06

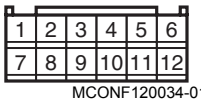

MCONF120034-01

L07 (TO J01)

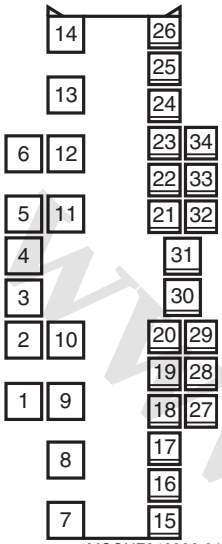

MCONF340006-01

L08 (TO G07)

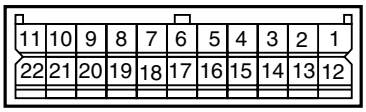

MCONM220004-01

L09 (TO G08)

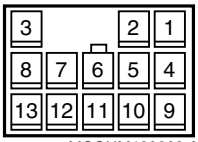

MCONM130003-01

L10

MCONF010060-01

L11

MCONF020022-01

IF EQPD

L12

MCONF020209-01

L13 (TO J16)

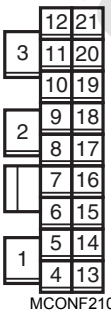

MCONF210001-01

L14

MCONM020027-01

L15 (TO R01)

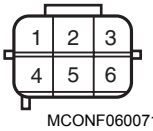

MCONF060071-01

L16

MCONF010060-01

L17 (TO L66)

MCONM030009-01

L18

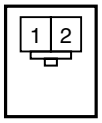

MCONF020207-01

IF EQPD

L19 (TO L68)

MCONF020151-01

3 dr

L19

MCONF020211-01

5 dr

L20

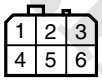

MCONF060044-01

L21

MCONF020232-01

L22

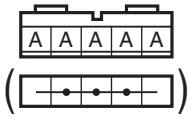

MCONF050038-01

L23

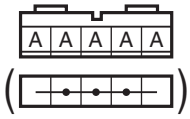

MCONF050038-01

L25

MCONF020212-01

IF EQPD

L26

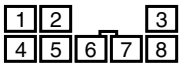

MCONF080014-01

L27 (TO G72)

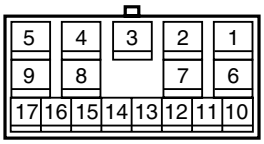

MCONM170001-01

www.cargeek.ir

| | | | | |
|---|---|---|---|---|
| L28 (TO G73)<br>MCONM180002-01 | L29 (TO G55)<br>MCONM040015-01 | L30<br>MCONF020212-01<br>IF EQPD | L31 (TO J09)<br>MCONF340006-01 | L32<br>MCONF160038-01<br>IF EQPD |
| L33<br>MCONF230001-01<br>IF EQPD | L34<br>MCONF010060-01 | L35<br>MCONF020022-01<br>IF EQPD | L36<br>MCONF020209-01 | L37 (TO J27)<br>MCONF210001-01 |
| L38<br>MCONM020027-01 | L40<br>MCONF010060-01 | L41<br>MCONF020207-01<br>IF EQPD | L42 (TO O01)<br>MCONM160005-01 | L43<br>MCONF060044-01 |
| L44<br>MCONF040099-01 | L45<br>MCONF020228-01<br>5 dr | L47<br>MCONF010001-01 | L48<br>MCONF010030-01 | L49<br>MCONF020228-01<br>5 dr |
| L52<br>MCONF020013-01 | L53<br>MCONF020013-01 | L54<br>MCONM010017-01 | L56<br>MCONF020151-01 | L57<br>MCONF040095-01 |
| L59<br>MCONF040095-01 | L63<br>MCONF020008-01<br>3 dr | L64<br>MCONF020008-01<br>3 dr | L66 (TO L17)<br>MCONF030069-01 | L67<br>MCONF030110-01 |
| L68 (TO L19)<br>MCONM020005-01<br>3 dr | L69<br>MCONF020211-01<br>3 dr | | | |

www.cargeek.ir

www.CarGeek.ir

## O Connector

S5JB0A910F007

| O01 (TO L42) | O02 | O03 | O04 | O05 | O06 |
|---|---|---|---|---|---|
| MCONF160010-01 | MCONM010034-01 | MCONM040022-01 | 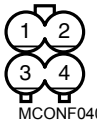 MCONF040069-01 | 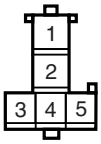 MCONF050037-02 | MCONM010034-01 |
| O07 | O08 | O09 | | | |
| MCONF020026-01 | MCONM020018-01 | MCONM020016-01 | | | |

## Q Connector

S5JB0A910F012

| Q01 (TO G67) | Q02 |
|---|---|
| 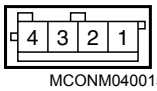 MCONM040015-01 | 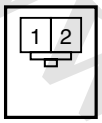 MCONF020207-01 |

## R Connector

S5JB0A910F008

| R01 (TO L15) | R02 | R03 |
|---|---|---|
| MCONM060034-01 | MCONF040048-01 | MCONF020079-01 |

www.cargeek.ir

www.cargeek.ir

www.CarGeek.ir


# Lighting Systems

## Precautions

### Precautions for Discharge Headlight Service (If Equipped)

S5JB0A9200001

**⚠ WARNING**

- **Do not touch igniter or ballast when lighting switch is at “HEAD” position to avoid possible electric shock.**
- **Do not measure voltage or resistance with tester connected to output connector of ballast or igniter to avoid possible electric shock.**
- **Do not perform work where exposed to water including rain or with wet hands to avoid possible electric shock.**
- **Disassembling igniter or ballast is strictly prohibited as it may cause an electric shock.**
- **Before inspecting or repairing discharge headlight or its peripheral parts, make sure that lighting switch is at OFF position and battery is disconnected at negative terminal to avoid possible electrical shock.**
- **Do not set lighting switch to “HEAD” position with connector disconnected or any part removed to avoid possible electric shock.**
- **Do not touch glass surface of headlight bulb. Oil or grease attached on it may not only make bulb service life shorter but also cause bulb to burst when lighting switch is turned on.**
- **Mercury, metal iodide and xenon gas are sealed in discharge headlight bulb. Be sure to dispose of used discharge headlight bulb properly according to applicable rules or regulations.**

### Precautions in Diagnosing Troubles (Vehicle Equipped with Auto Leveling Headlight System)

S5JB0A9200002

- Be sure to read “Precautions for Electrical Circuit Service:  in Section 00” before inspection and observe what is written there.
- Replacement of height sensor and headlight leveling control module.When height sensor and/or headlight leveling control module is replaced with new one, perform initialization of auto leveling headlight system according to “Initialization of Auto Leveling Headlight System: ”.

www.cargeek.ir

www.CarGeek.ir

# General Description

## Discharge Headlight Description (If Equipped)

S5JB0A9201001

Discharge headlight provides more brightness and consumes less electricity as compared with the conventional halogen headlight. It consists of a ballast (1), igniter (2) and discharge headlight bulb (3).

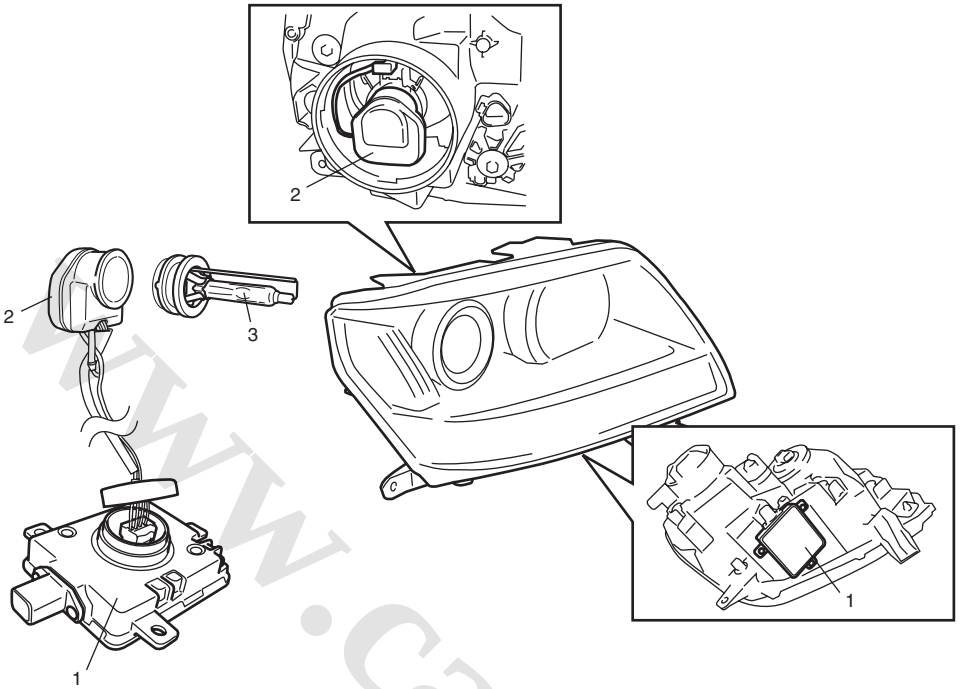


I5JB0A920002-01

### Ballast

Ballast makes the voltage from the battery rise and converts the current from DC to AC. It also outputs high voltage to the igniter when the headlight is turned on and supplies to discharge headlight bulb with necessary voltage for continuous lighting while it is lit.

### Igniter

Igniter generates high voltage needed to turn on the discharge headlight. It is charged with high voltage raised by the ballast and it applies voltage pulse as high as about 20,000V to the tungsten electrode in the discharge headlight bulb.After the discharge headlights light up, the ballast supplies voltage to bulbs.

### Discharge headlight bulb

Discharge headlight bulb is used for the low beam. It does not have a filament but xenon gas (1), mercury (2) and metal iodide sealed in it. It lights up when its tungsten electrodes (4) apply high voltage to these contents.

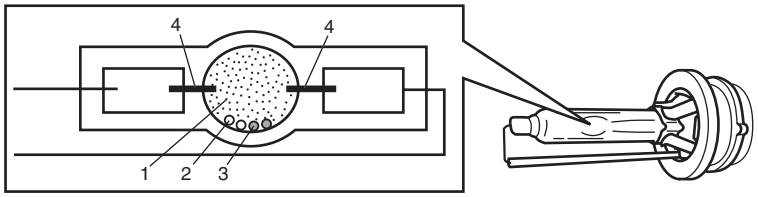


I5JB0A920001-01

### Fail-safe Function of Discharge Headlight

As the ballast has a fail-safe function which stops supply of the voltage to the igniter when it detects any of the following condition.

- Ignition switch is set to “HEAD” position while igniter is not connected to discharge headlight bulb
- Discharge headlight does not light up even when lighting switch is set to “HEAD” position.
- Ballast detects a short in the circuit between discharge headlight bulb and ballast when lighting switch is at “HEAD” position.

www.cargeek.ir

www.CarGeek.ir


## Auto Leveling Headlight System Description (If Equipped)

S5JB0A9201002

Auto Leveling Headlight System adjusts the optical axis of the headlight automatically to be suitable for the varied vehicle position while the headlights are lit. It consists of front height sensor (1), rear height sensor (2), headlight leveling control module (3), headlight leveling actuator (4) and headlight leveling warning light (5).

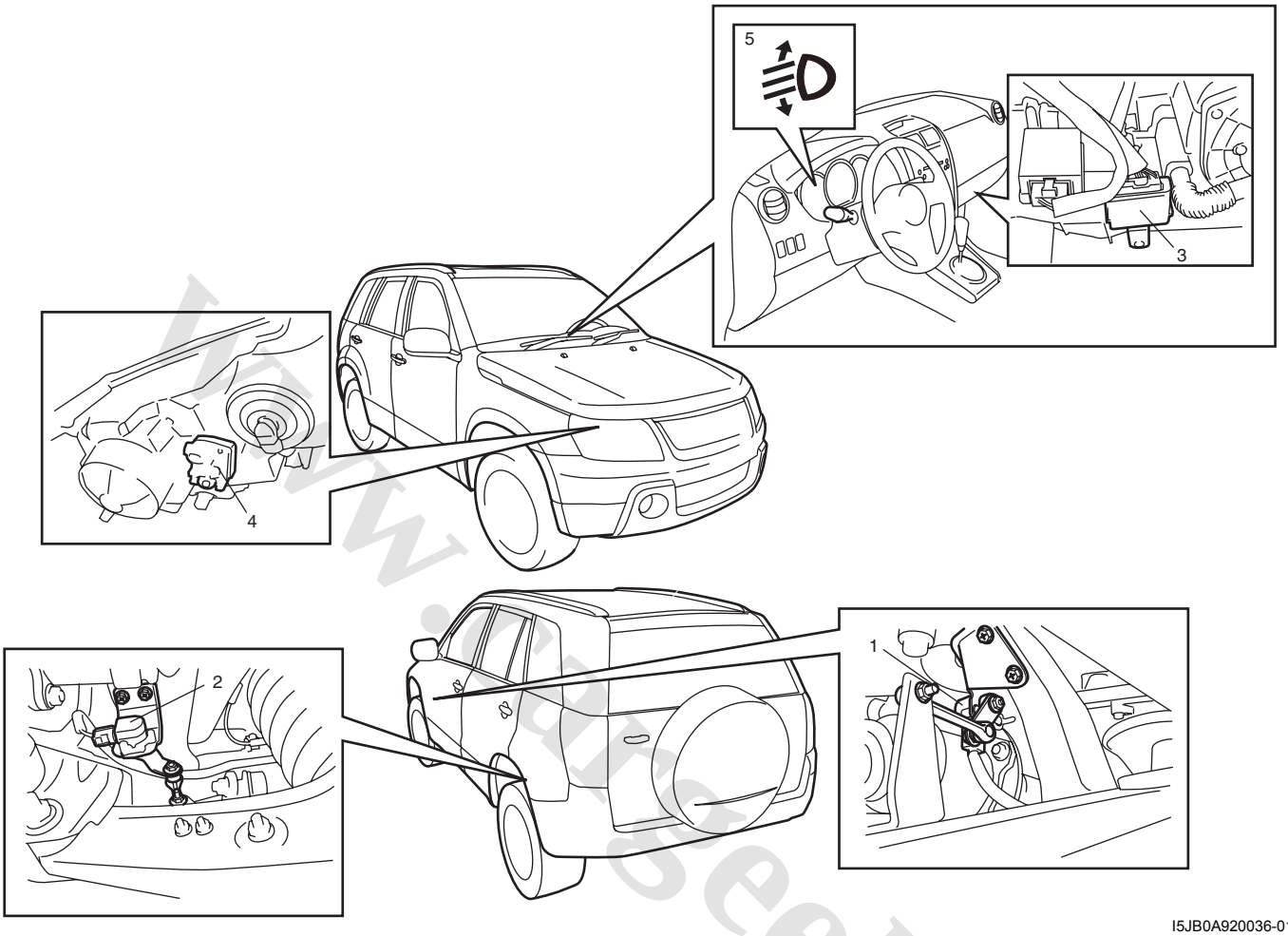


I5JB0A920036-01

With more passenger(s) or luggage in the vehicle, the vehicle position differs from that in such vehicle state with one person and no load in the vehicle and angle of the headlight optical axis varies accordingly. This system automatically adjusts the varied angle to maintain the optical axis properly.

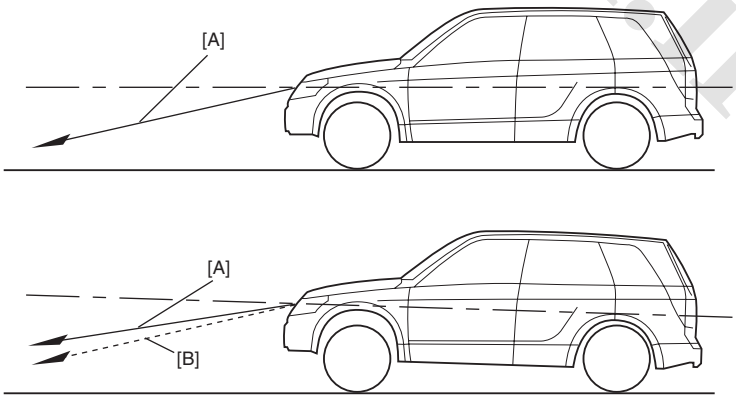


I5JB0A920004-01

| | |
|---|---|
| [A]: | Optical axis of headlight in standard position |
| [B]: | Corrected optical axis of headlight |

www.cargeek.ir

www.CarGeek.ir

**Front and rear height sensors**

Height sensor (1) is installed to the front and rear suspension frames respectively and connected to the lower arm (4) with the link (3). Each height sensor converts vertical movement of the lower arm into the resistance value and outputs the detected change in the vehicle position as a voltage signal to the headlight leveling control module.

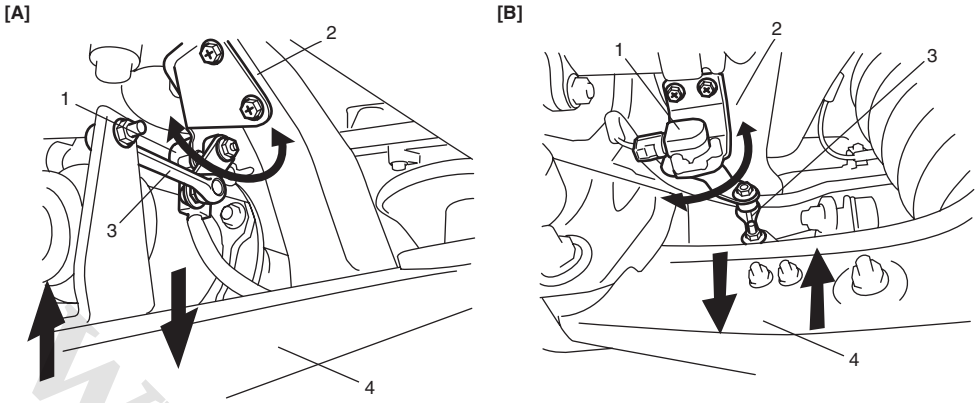


I5JB0A920005-01

| [A]: Front | [B]: Rear |
|---|---|

**Headlight leveling control module**

Headlight leveling control module is installed at the foot of the front passenger seat. It uses the headlight ON signal from the lighting switch, vehicle speed signal from BCM and vehicle position signal from height sensors to calculate the angle of the headlight optical axis to be corrected. Then it adjusts the optical axis angle of headlight based on the calculated angle value by driving the headlight leveling actuator so that proper headlight aiming is obtained. Also, when any abnormality is detected in the system, the headlight leveling control module makes the headlight leveling warning light in the combination meter light up to warn the driver of an abnormality in the system.

**Fail-safe function of headlight leveling control module**

Headlight leveling control module has a fail-safe function which operates as follows.

| Detecting condition | Fail-safe operation | Warning light |
|---|---|---|
| Power voltage supplied to headlight leveling control module is higher than 18.5V | Stops headlight leveling actuator operation. | OFF |
| Power voltage supplied to headlight leveling control module is lower than 9V | Stops headlight leveling actuator operation. | OFF |
| Vehicle speed is 180km/h or higher | Stops headlight leveling actuator operation. | OFF |
| Voltage supplied to height sensor is lower than 4.6V | Stops headlight leveling actuator operation. | ON |
| Signal voltage from height sensor is higher than 4.75V or lower than 0.25V | Stops headlight leveling actuator operation. | ON |
| Abnormality in headlight leveling control module is detected | Resets microcomputer in headlight leveling control module. | ON |
| Correction value calculated by headlight leveling control module exceeds operation range of headlight leveling actuator | Drives headlight leveling actuator within its operation range. | OFF |

www.cargeek.ir

www.CarGeek.ir


**Headlight leveling actuator**

Headlight leveling actuator is (1) located in the headlight housing (2). It moves the reflector (3) in the headlight housing according to the drive signal from the headlight leveling control module so as to adjust the optical axis of the headlight to the angle calculated by the headlight leveling control module.

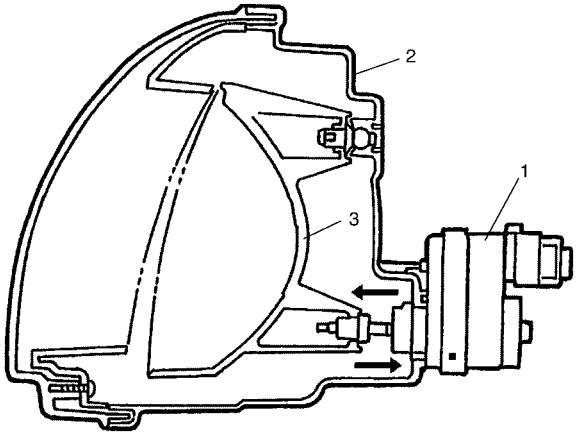


I5JB0A920006-06

## Auto-On Headlight System Description (If Equipped)

S5JB0A9201003

The auto-on headlight is controlled by BCM (1) and works as follows.Under such conditions as the ignition switch turned ON, the lighting switch (2) turned to the “AUTO” position and the parking brake released, when illuminance to the auto-on headlight sensor (3) becomes lower than the specified value, the headlights and clearance lights are turned ON by BCM. On the other hand, when illuminance to the auto-on headlight sensor becomes higher than the specified value under the same conditions, the headlights and clearance lights are turned OFF by BCM.

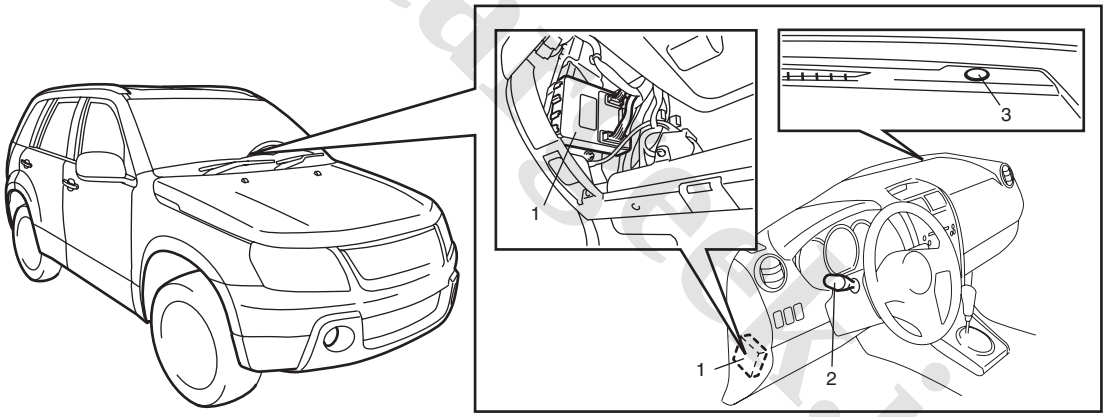


I5JB0A920007-01

www.cargeek.ir

www.CarGeek.ir

## D.R.L. System Description (If Equipped)

S5JB0A9201004

The D.R.L. system is controlled by BCM (1). It lights headlights when following two conditions are met.Conditions for D.R.L. operation:

- The engine is running
- The lighting switch is at “OFF” position

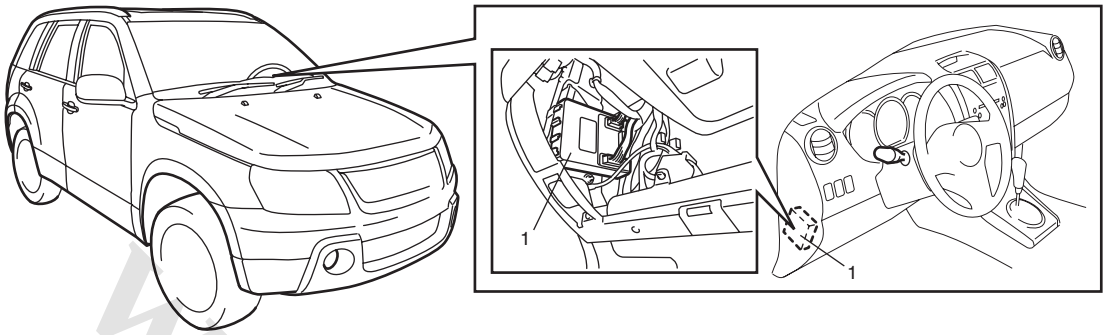


I5JB0A920008-01

# Schematic and Routing Diagram

## Headlight Auto Leveling System wiring Circuit Diagram

S5JB0A9202001

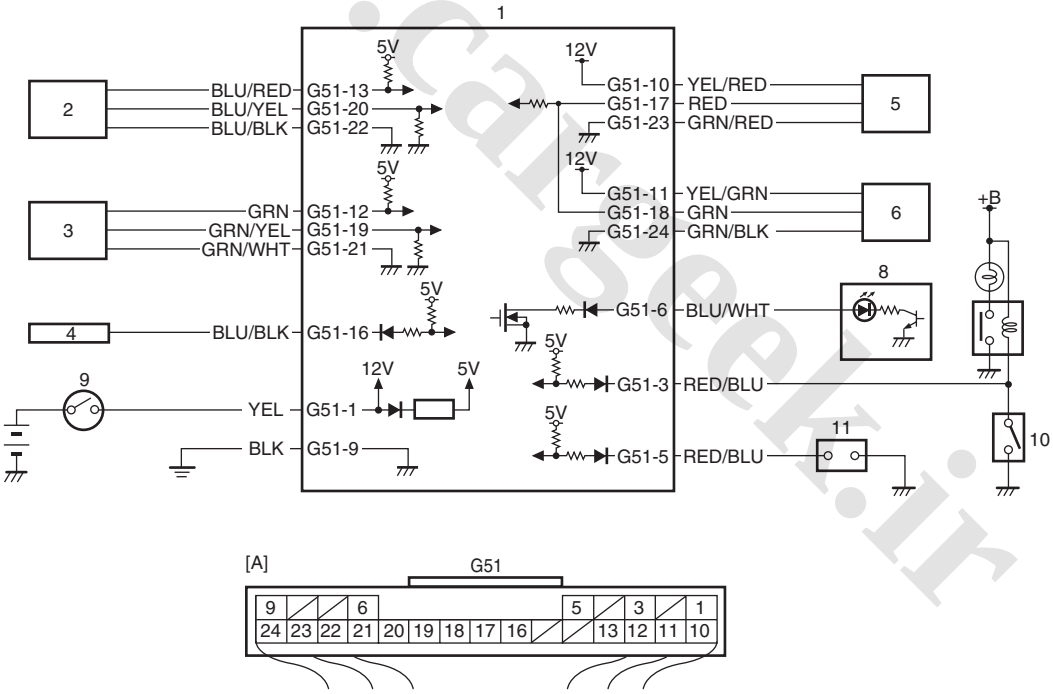


I5JB0A920011-02

| | | |
|---|---|---|
| [A]: Headlight leveling control module connector (viewed from harness side) | 4. BCM | 8. Headlight leveling warning light |
| 1. Headlight leveling control module | 5. Right headlight leveling actuator | 9. Ignition switch |
| 2. Front height sensor | 6. Left headlight leveling actuator | 10. Lighting switch |
| 3. Rear height sensor | 7. Combination meter | 11. Diagnosis connector |

www.cargeek.ir

www.CarGeek.ir


# Component Location

## Lighting System Components Location

S5JB0A9203001

**NOTE**

**The following figure shows left-hand steering vehicle. For right-hand steering vehicle, parts with (*) are installed at the opposite side.**

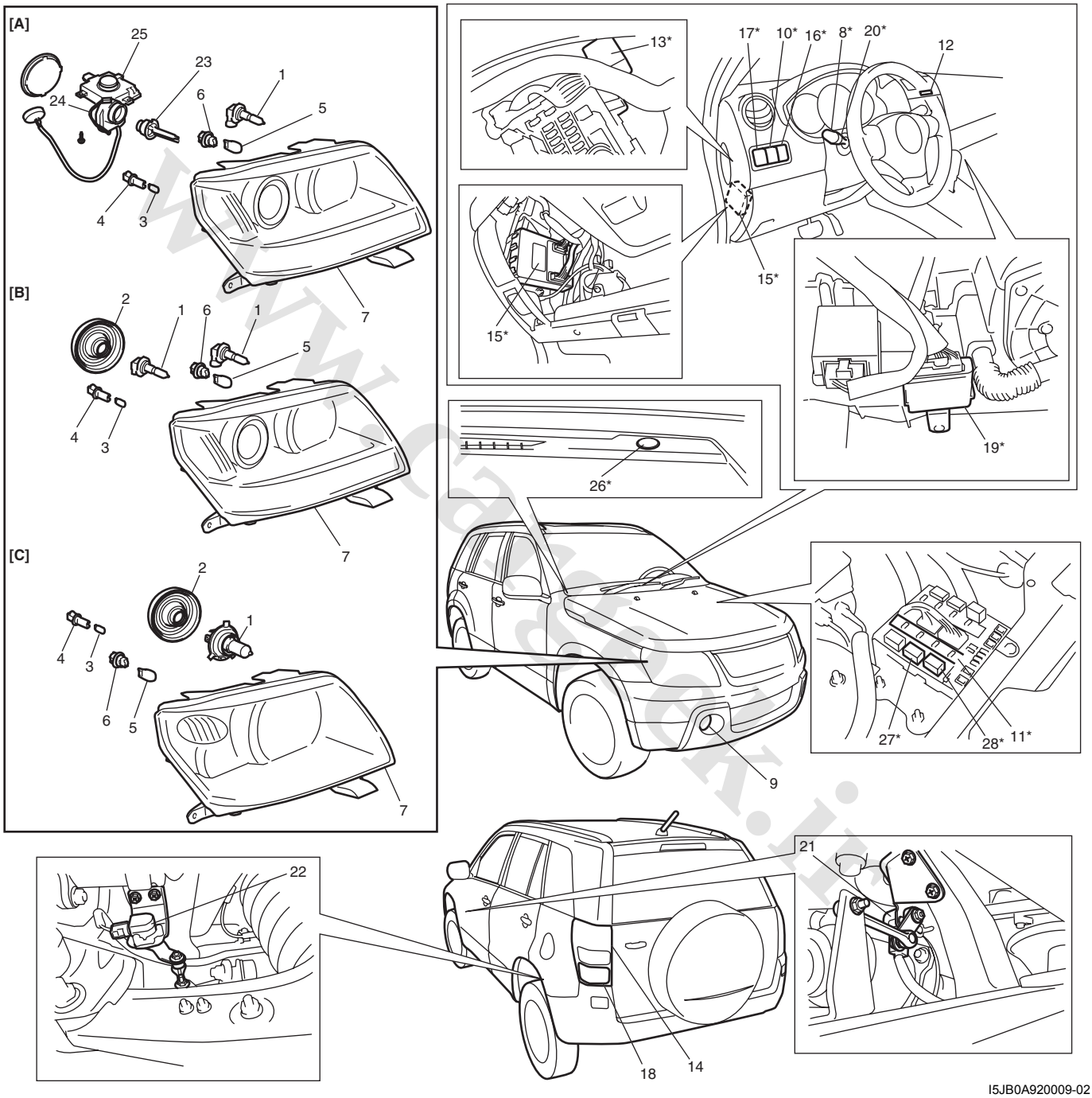


I5JB0A920009-02

www.cargeek.ir

www.CarGeek.ir

| | | |
|---|---|---|
| [A]: Discharge headlight | 9. Front fog light (if equipped) | 20. Rear fog light switch (if equipped) |
| [B]: Halogen headlight of 5door model | 10. Front fog light switch (if equipped) | 21. Front height sensor |
| [C]: Halogen headlight of 3door model | 11. Front fog light relay (if equipped) | 22. Rear height sensor |
| 1. Headlight bulb | 12. Hazard warning switch | 23. Discharge head light bulb |
| 2. Socket cover | 13. Turn signal / hazard warning relay | 24. Igniter |
| 3. Clearance light bulb | 14. Rear combination light | 25. Ballast |
| 4. Clearance light bulb socket | 15. BCM | 26. Auto-on headlight sensor |
| 5. Turn signal light bulb | 16. Illumination cancel switch (if equipped) | 27. Headlight high beam relay |
| 6. Turn signal light bulb socket | 17. Headlight leveling switch (if equipped) | 28. Headlight low beam relay |
| 7. Headlight unit | 18. Rear fog light (if equipped) | [A]: Junction block assembly viewed from relay side |
| 8. Lighting switch | 19. Headlight auto leveling control module (if equipped) | |

## Interior Light System Location

S5JB0A9203002

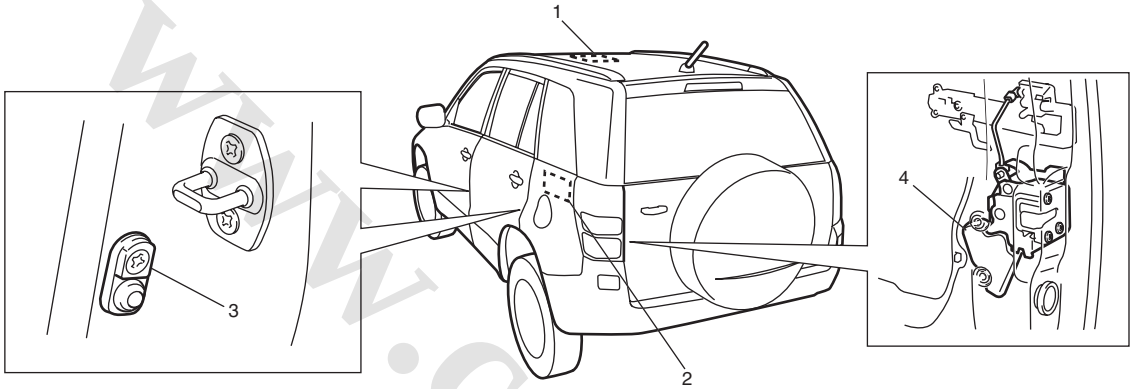


I5JB0A920010-01

| | |
|---|---|
| 1. Dome light | 3. Door switches (both sides) |
| 2. Luggage compartment light (if equipped) | 4. Rear end door switch (included in lock assembly) |

# Diagnostic Information and Procedures

## Self-Diagnosis Function for Auto Leveling Headlight System

S5JB0A9204015

The headlight leveling control module has self-diagnosis function to monitor the system components and circuits while the headlight auto leveling system is at work. When the headlight leveling control module detects an abnormality in the system, the headlight leveling warning light in the combination meter turns ON. However, the headlight leveling control module does not have a function to indicate location of such abnormality.

## Headlight Leveling Warning Light Check

S5JB0A9204016

1) Turn ignition switch to ON position.
2) Check that headlight leveling warning light (1) lights for about 2 seconds and then goes OFF. If the headlight leveling warning light lights up again 10 seconds after it turned off, go to “Headlight Auto Leveling System Symptom Diagnosis (If Equipped): ”. If headlight leveling warning light flashes, go to “Initialization of Auto Leveling Headlight System: ”.

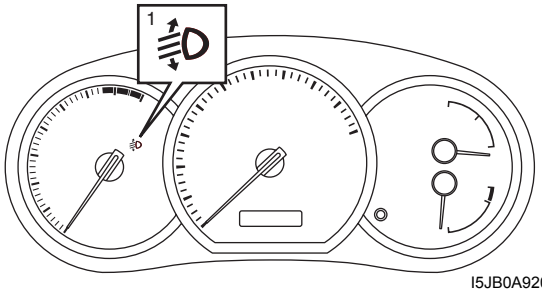


I5JB0A920012-01

www.cargeek.ir

www.CarGeek.ir


## Headlight Symptom Diagnosis (Vehicle Equipped With Discharge Headlight)

S5JB0A9204001

| Condition | Possible cause | Correction / Reference Item |
|---|---|---|
| ***Only one low beam does not light up*** | Circuit fuse blown | *Replace fuse and check for short circuit.* |
| | Bulb faulty | *Replace bulb.* |
| | Igniter faulty | *Replace igniter.* |
| | Ballast faulty | *Replace ballast.* |
| | Wiring or ground faulty | *Repair circuit.* |
| ***Low beam does not light up*** | Circuit fuses blown | *Replace fuses and check for short circuit.* |
| | Headlight low beam relay faulty | *Replace relay.* |
| | Lighting or dimmer switch faulty | *Check lighting and dimmer switch referring to "Headlight Switch (in Lighting Switch) Inspection: ".* |
| | Bulbs faulty | *Replace bulbs.* |
| | Igniters faulty | *Replace igniters.* |
| | Ballasts faulty | *Replace ballasts.* |
| | Wiring or ground faulty | *Repair circuit.* |
| | BCM faulty | *Check BCM for function referring to "Inspection of BCM and its Circuits: in Section 10B".* |
| ***Only one high beam does not light up*** | Circuit fuse blown | *Replace fuse and check for short circuit.* |
| | Bulb blown | *Replace bulb.* |
| | Wiring or ground faulty | *Repair circuit.* |
| ***High beam does not light up*** | Circuit fuses blown | *Replace fuses and check for short circuit.* |
| | Headlight high beam relay faulty | *Replace relay.* |
| | Lighting or dimmer switch faulty | *Check lighting and dimmer switch referring to "Headlight Switch (in Lighting Switch) Inspection: ".* |
| | Bulbs blown | *Replace bulbs.* |
| | Wiring or ground faulty | *Repair circuit.* |

## Headlight Symptom diagnosis (Vehicle Not Equipped With Discharge Headlight)

S5JB0A9204017

| Condition | Possible cause | Correction / Reference Item |
|---|---|---|
| ***Only one low beam does not light up*** | Circuit fuse blown | *Replace fuse and check for short circuit.* |
| | Bulb blown | *Replace bulb.* |
| | Wiring or ground faulty | *Repair circuit.* |
| ***Low beam does not light up*** | Circuit fuse blown | *Replace fuses and check for short circuit.* |
| | Headlight low beam relay faulty | *Replace relay.* |
| | Lighting or dimmer switch faulty | *Check lighting and dimmer switch referring to "Headlight Switch (in Lighting Switch) Inspection: ".* |
| | Bulbs blown | *Replace bulbs.* |
| | Wiring or ground faulty | *Repair circuit.* |
| | BCM faulty (with DRL vehicle or auto-on headlight vehicle) | *Check BCM for function referring to "Inspection of BCM and its Circuits: in Section 10B".* |
| ***Only one high beam does not light up*** | Circuit fuse blown | *Replace fuse and check for short circuit.* |
| | Bulb blown | *Replace bulb.* |
| | Wiring or ground faulty | *Repair circuit.* |
| ***High beam does not light up*** | Circuit fuse blown | *Replace fuses and check for short circuit.* |
| | Headlight high beam relay faulty | *Replace relay.* |
| | Lighting or dimmer switch faulty | *Check lighting and dimmer switch referring to "Headlight Switch (in Lighting Switch) Inspection: ".* |
| | Bulbs blown | *Replace bulbs.* |
| | Wiring or ground faulty | *Repair circuit.* |

www.cargeek.ir

www.CarGeek.ir

## Auto-On Headlight System Symptom Diagnosis (If Equipped)

S5JB0A9204018

**NOTE**

- **Use of SUZUKI scan tool makes it easy to check whether a faulty condition is on the input side or output side of BCM. For checking procedure, refer to "Diagnosis Using Output Test Function of SUZUKI Scan Tool" under "Scan Tool Data: in Section 10B".**
- **Check each part in the order from the top of the following list.**

| Condition | Possible cause | Correction / Reference Item |
|---|---|---|
| ***Headlights are not turned ON or OFF automatically even after darkened or lightened*** | Circuit fuse blown | *Replace fuse and check for short circuit.* |
| | Parking brake switch faulty | *Check parking brake switch referring to "Parking Brake Switch Inspection: in Section 9C".* |
| | Lighting or dimmer switch faulty | *Check lighting and dimmer switch referring to "Headlight Switch (in Lighting Switch) Inspection: ".* |
| | Auto-on headlight sensor faulty | *Check auto-on headlight sensor referring to "Auto-On Headlight Sensor Inspection (If Equipped): ".* |
| | Wiring or ground faulty | *Repair circuit.* |
| | BCM faulty | *Check BCM for function referring to "Inspection of BCM and its Circuits: in Section 10B".* |

## DRL System Symptom Diagnosis (If Equipped)

S5JB0A9204009

**NOTE**

- **Use of SUZUKI scan tool makes it easy to check whether a faulty condition is on the input side or output side of BCM. For checking procedure, refer to "Diagnosis Using Output Test Function of SUZUKI Scan Tool".**
- **Check each part in the order from the top of the following list.**

| Condition | Possible cause | Correction / Reference Item |
|---|---|---|
| ***Headlight does not light when lighting switch is in OFF position and engine is running*** | Lighting switch faulty | *Check lighting switch referring to "Headlight Switch (in Lighting Switch) Inspection: ".* |
| | BCM faulty | *Check BCM for function referring to "Inspection of BCM and its Circuits: in Section 10B".* |
| | Wiring or grounding faulty | *Repair circuit.* |
| ***Headlight lights even if engine stop and lighting switch is OFF position*** | Lighting switch faulty | *Check system referring to "Headlight Switch (in Lighting Switch) Inspection: ".* |
| | Wiring or grounding faulty | *Repair circuit.* |
| | BCM faulty | *Check BCM for function referring to "Inspection of BCM and its Circuits: in Section 10B".* |

www.cargeek.ir

www.CarGeek.ir


## Headlight Auto Leveling System Symptom Diagnosis (If Equipped)

S5JB0A9204019

| Condition | Possible cause | Correction / Reference Item |
|---|---|---|
| ***Headlight leveling Warning Light comes on steady*** | Height sensor faulty | *Check height sensor referring to "Height Sensor and Its Circuit Inspection (If Equipped): ".* |
| | Wiring or ground faulty | *Repair circuit.* |
| | Headlight leveling control module faulty | *Check headlight leveling control module for function referring to "Inspection of Headlight Leveling Control Module and Its Circuit (Vehicle Equipped With Auto Leveling Headlight System): ".* |
| ***Optical axes of both headlights do not change*** | Circuit fuse blown | *Replace fuse and check for short circuit.* |
| | Supply voltage too low or too high | *Check charging system referring to "Generator Test (Undercharged Battery Check): in Section 1J" or "Generator Test (Overcharged Battery Check): in Section 1J".* |
| | Wiring or ground faulty | *Repair circuit.* |
| | Headlight leveling control module faulty | *Check headlight leveling control module for function referring to "Inspection of Headlight Leveling Control Module and Its Circuit (Vehicle Equipped With Auto Leveling Headlight System): ".* |
| ***Optical axis of only one headlight does not change*** | Headlight levering actuator faulty | *Check actuator referring to "Headlight Leveling Actuator Inspection (If Equipped): ".* |
| | Headlight housing deformed | *Check actuator referring to "Headlight Leveling Actuator Inspection (If Equipped): ".* |
| | Wiring or ground faulty | *Repair circuit.* |

## Headlight Manual Leveling System Symptom Diagnosis (If Equipped)

S5JB0A9204010

| Condition | Possible cause | Correction / Reference Item |
|---|---|---|
| ***Optical axes of both headlights do not change*** | Circuit fuse blown | *Replace fuse and check for short circuit.* |
| | Headlight manual leveling switch faulty | *Check headlight manual leveling switch referring to "Headlight Manual Leveling Switch (If Equipped) Inspection: ".* |
| | Supply voltage too low | *Check charging system referring to "Generator Test (Undercharged Battery Check): in Section 1J".* |
| | Wiring or grounding faulty | *Repair circuit.* |
| ***Optical axis of only one headlight does not change*** | Circuit fuse blown | *Replace fuse and check for short circuit.* |
| | Headlight leveling actuator faulty | *Check actuator referring to "Headlight Leveling Actuator Inspection (If Equipped): ".* |
| | Headlight housing deformed | *Replace headlight housing.* |
| | Wiring or grounding faulty | *Repair circuit.* |

## Turn Signal and Hazard Warning Light Symptom Diagnosis

S5JB0A9204002

| Condition | Possible cause | Correction / Reference Item |
|---|---|---|
| ***Flash rate high or one side only flashes*** | Bulb blown on "flash rate high"-side | *Replace bulb.* |
| | Incorrect bulb | *Replace bulb.* |
| | Turn signal / hazard warning relay faulty | *Check turn signal / hazard warning relay referring to "Turn Signal and Hazard Warning Relay Inspection: ".* |
| | Open circuit or high resistance existing either; between turn signal switch and non lighting bulb, or between hazard warning switch and non lighting bulb | *Repair circuit.* |
| | Wiring or grounding faulty | *Repair circuit.* |

www.cargeek.ir

www.CarGeek.ir

| Condition | Possible cause | Correction / Reference Item |
|---|---|---|
| ***No flashing***<br><br>***NOTE***<br>• ***Use of SUZUKI scan tool makes it easy to check whether a faulty condition is on the input side or output side of BCM. For checking procedure, refer to "Diagnosis Using Output Test Function of SUZUKI Scan Tool".***<br>• ***Check each part in the order from the top of the following list.*** | Circuit fuse(s) blown | *Replace fuse(s) and check for short circuit.* |
| | Turn signal / hazard warning relay faulty | *Check turn signal / hazard warning relay referring to "Turn Signal and Hazard Warning Relay Inspection: ".* |
| | Turn signal light switch faulty | *Check turn signal light switch referring to "Turn Signal Light Switch (in Lighting Switch) Inspection: ".* |
| | Hazard warning switch faulty | *Check hazard warning switch referring to "Hazard Warning Switch Inspection: ".* |
| | Open circuit or high resistance existing between battery and switch | *Repair circuit.* |
| | Wiring or grounding faulty | *Repair circuit.* |
| | BCM faulty | *Replace after making sure that none of above parts is faulty.* |
| ***Flash rate low*** | Supply voltage low | *Check charging system.* |
| | Turn signal / hazard warning relay faulty | *Check turn signal / hazard warning relay referring to "Turn Signal and Hazard Warning Relay Inspection: ".* |

## Clearance, Tail and License Plate Light Symptom Diagnosis

S5JB0A9204003

**NOTE**

- **Use of SUZUKI scan tool makes it easy to check whether a faulty condition is on the input side or output side of BCM. For checking procedure, refer to "Diagnosis Using Output Test Function of SUZUKI Scan Tool" under "Scan Tool Data: in Section 10B".**
- **Check each part in the order from the top of the following list.**

| Condition | Possible cause | Correction / Reference Item |
|---|---|---|
| ***All lights do not light up*** | Circuit fuse blown | *Replace fuse and check for short circuit.* |
| | Lighting and dimmer switch of combination switch faulty | *Check lighting and dimmer switch referring to "Headlight Switch (in Lighting Switch) Inspection: ".* |
| | Wiring or grounding faulty | *Repair circuit.* |
| | BCM faulty | *Check BCM for function referring to "Inspection of BCM and its Circuits: in Section 10B".* |
| ***Some lights do not light up*** | Bulb(s) blown | *Replace bulb(s).* |
| | Wiring or grounding faulty | *Repair circuit.* |

## Back-Up Light Symptom Diagnosis

S5JB0A9204004

| Condition | Possible cause | Correction / Reference Item |
|---|---|---|
| ***Back-up lights do not light up*** | Bulb(s) blown | *Replace bulb(s).* |
| | Circuit fuse blown | *Replace fuse and check for short circuit.* |
| | Back-up light switch (M/T model) or transmission range sensor (A/T model) faulty | *Check back-up light switch or transmission range sensor referring to "Back Up Light Switch Inspection: in Section 5B" or "Transmission Range Sensor Inspection and Adjustment: in Section 5A".* |
| | Wiring or grounding faulty | *Repair circuit.* |
| ***Back-up lights stay on*** | Back-up light switch (M/T model) or transmission range sensor (A/T model) faulty | *Check back-up light switch or transmission range sensor referring to "Back Up Light Switch Inspection: in Section 5B" or "Transmission Range Sensor Inspection and Adjustment: in Section 5A".* |

www.cargeek.ir

www.CarGeek.ir


## Stop (Brake) Lamp Symptom Diagnosis

S5JB0A9204005

| Condition | Possible cause | Correction / Reference Item |
|---|---|---|
| ***Stop (brake) lamp do not light up*** | Bulb(s) blown | *Replace bulb(s).* |
| | Circuit fuse blown | *Replace fuse and check for short circuit.* |
| | Stop (brake) lamp switch faulty | *Check stop (brake) lamp switch referring to "Stop (Brake) Lamp Switch Inspection: ".* |
| | Wiring or grounding faulty | *Repair circuit.* |
| ***Stop (brake) lamp stay on*** | Stop (brake) lamp switch faulty | *Check or adjust stop (brake) lamp switch referring to "Stop (Brake) Lamp Switch Inspection: " or "Brake Light Switch Adjustment: in Section 4A".* |

## Front Fog Light (If Equipped) Symptom Diagnosis

S5JB0A9204006

**NOTE**

- **Use of SUZUKI scan tool makes it easy to check whether a faulty condition is on the input side or output side of BCM. For checking procedure, refer to "Diagnosis Using Output Test Function of SUZUKI Scan Tool" under "Scan Tool Data: in Section 10B".**
- **Check each part in the order from the top of the following list.**

| Condition | Possible cause | Correction / Reference Item |
|---|---|---|
| ***Only one light does not light*** | Bulb blown | *Replace bulb.* |
| | Wiring or grounding faulty | *Repair circuit.* |
| ***Front fog lights do not light*** | Circuit fuse blown | *Replace fuse and check for short circuit.* |
| | Bulbs blown | *Replace bulbs.* |
| | Front fog light switch faulty | *Check front fog light switch referring to "Front Fog Light Switch Inspection (If Equipped): ".* |
| | Front fog light relay faulty | *Check front fog light relay referring to "Front Fog Light Relay Inspection (If Equipped): ".* |
| | Wiring or grounding faulty | *Repair circuit.* |
| | BCM faulty | *Check BCM for function referring to "Inspection of BCM and its Circuits: in Section 10B".* |

## Rear Fog Light Symptom Diagnosis (If Equipped)

S5JB0A9204011

| Condition | Possible cause | Correction / Reference Item |
|---|---|---|
| ***Rear fog light do not light*** | Circuit fuse blown | *Replace fuse and check for short circuit.* |
| | Bulb blown | *Replace bulb.* |
| | Rear fog light switch faulty | *Check rear fog light switch referring to "Rear Fog Light Switch Inspection (If Equipped): ".* |
| | Wiring or grounding faulty | *Repair circuit.* |

## Illumination Cancel System Symptom Diagnosis (If Equipped)

S5JB0A9204012

| Condition | Possible cause | Correction / Reference Item |
|---|---|---|
| ***Illumination cancel do not normal operation*** | Circuit fuse blown | *Replace fuse and check for short circuit.* |
| | Illumination cancel switch faulty | *Check illumination cancel switch referring to "Illumination Cancel Switch (If Equipped) Inspection: ".* |
| | Combination meter and/or information display (clock) faulty | *Replace combination meter and/or information display (clock).* |
| | Wiring or grounding faulty | *Repair circuit.* |

www.cargeek.ir

www.CarGeek.ir

## Interior Light Symptom Diagnosis

S5JB0A9204007

**NOTE**

- **Use of SUZUKI scan tool makes it easy to check whether a faulty condition is on the input side or output side of BCM. For checking procedure, refer to "Diagnosis Using Output Test Function of SUZUKI Scan Tool" under "Scan Tool Data: in Section 10B".**
- **Check each part in the order from the top of the following list.**

| Condition | Possible cause | Correction / Reference Item |
|---|---|---|
| ***Dome light does not light up*** | Bulb blown | *Replace bulb.* |
| | Circuit fuse blown | *Replace fuse and check for short circuit.* |
| | Dome light switch faulty | *Check dome light switch.* |
| | Door switch faulty | *Check door switch referring to "Door Switch (Front / Rear / Rear End Door) Inspection: in Section 9C".* |
| | Wiring or grounding | *Repair circuit.* |
| | BCM faulty | *Replace after making sure that none of above parts is faulty.* |
| ***Luggage compartment light (if equipped) does not light up*** | Bulb blown | *Replace bulb.* |
| | Back door switch faulty | *Check switch referring to "Door Switch (Front / Rear / Rear End Door) Inspection: in Section 9C".* |
| | Wiring or grounding faulty | *Repair circuit.* |

## Auto-On Headlight Operation Inspection (If Equipped)

S5JB0A9204020

1) Turn ignition switch to ON position and then turn lighting switch to "AUTO" position.
2) Release parking brake lever.
3) Check headlights for operation as follows. If headlights do not turn ON or OFF, go to "Auto-On Headlight System Symptom Diagnosis (If Equipped): ".
   a) Cover auto-on headlight sensor by hand and check that headlights light up then.
   b) Light over auto-on headlight sensor vertically with on incandescent lamp of approx, 100 W apart from about 100 mm (3.94 in.) (1) and check that headlights go off then.
   c) In the state as described in Step a), pull up parking brake lever and check that headlights go off then.

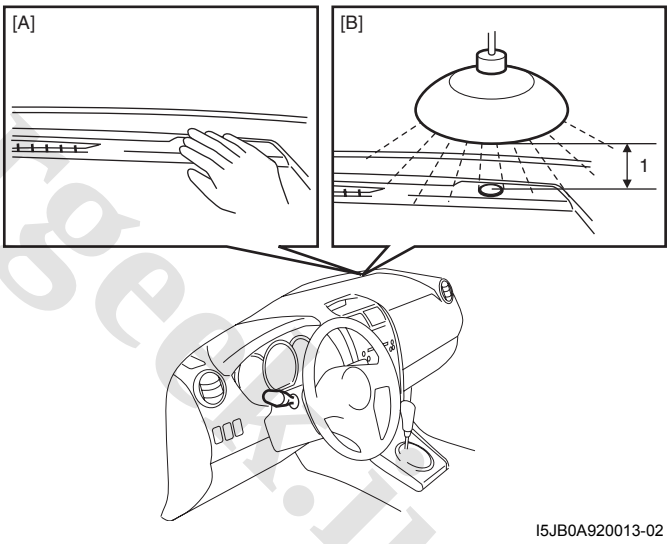


I5JB0A920013-02

| [A]: Fig. for Step a) | [B]: Fig. for Step b) |
|---|---|

## DRL Operation Inspection (If Equipped)

S5JB0A9204013

1) Confirm that lighting switch is in OFF position.
2) Confirm that dimmer and passing switch is in low beam position.
3) Check DRL for operation as follows.
   a) Turn ignition switch to ON position and check headlights remain OFF.
   b) Start engine and run it at idle speed. Check headlights turn ON at low beam.
   c) Switch dimmer and passing switch to high beam position and check headlights remain tuning ON at low beam.
4) If a malfunction is found, go to "DRL System Symptom Diagnosis (If Equipped): ".

www.cargeek.ir

www.CarGeek.ir


## Inspection of Headlight Leveling Control Module and Its Circuit (Vehicle Equipped With Auto Leveling Headlight System)

S5JB0A9204021

Headlight auto leveling control module and its circuits can be checked at headlight auto leveling control module wiring couplers by measuring voltage and pulse signal.

**⚠ CAUTION**

**Headlight auto leveling control module cannot be checked by itself. It is strictly prohibited to connect voltmeter or ohmmeter to headlight auto leveling control module with couplers disconnected from it.**

### Voltage Check

Check voltage between each terminal of headlight auto leveling control module and vehicle body ground under each condition. If measured voltage is out of standard value, check circuit (including switch and sensor) of terminal where voltage was measured.

**NOTE**

- **As each terminal voltage is affected by the battery voltage, confirm that it is 11 V or more when ignition switch is ON.**
- **Voltage with asterisk (*) cannot be measured by voltmeter because it is pulse signal.Check it with oscilloscope if necessary.**

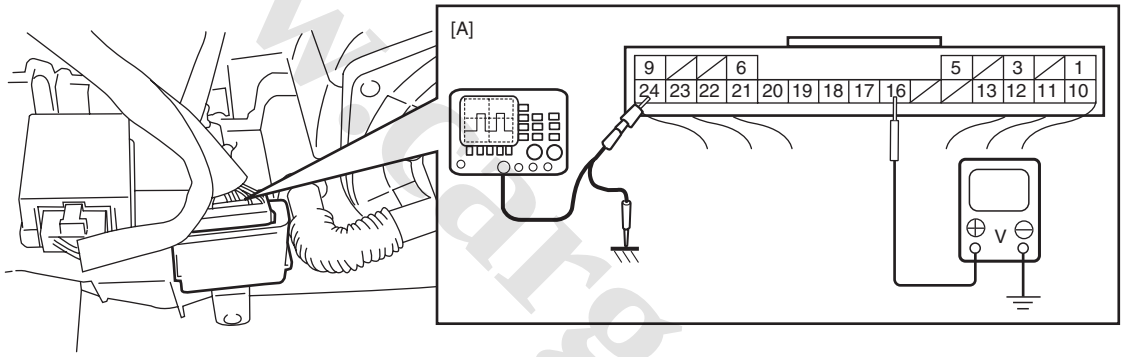


I5JB0A920014-02

[A]: Headlight leveling control module connector (viewed from harness side)

| Terminal | Circuit | Specification | Condition |
|---|---|---|---|
| 1 | Power source | 10 – 14 V | Ignition switch is at ON position. |
| 2 | — | — | — |
| 3 | Lighting switch | Less than 1.5 V | Lighting switch is at “HEAD” position. |
| | | 10 – 14 V | Lighting switch is at OFF position. |
| 4 | — | — | — |
| 5 | — | — | — |
| 6 | Headlight auto leveling indicator | Continuity | For about 3 seconds after ignition switch is turned on (i.e., headlight auto leveling indicator is lit up). |
| | | No continuity | More than about 3 seconds after ignition switch is turned on (i.e., headlight auto leveling indicator is not lit up). |
| 7 | — | — | — |
| 8 | — | — | — |
| 9 | Ground for headlight auto leveling control unit | 0 V | Ignition switch is at ON position. |
| 10 | Power supply for right headlight leveling actuator | 10 – 14 V | Ignition switch is at ON position. |
| 11 | Power supply for left headlight leveling actuator | 10 – 14 V | Ignition switch is at ON position. |

www.cargeek.ir

www.CarGeek.ir

| Terminal | Circuit | Specification | Condition |
|---|---|---|---|
| 12 | Power supply for rear height sensor | About 5 V | Ignition switch is at ON position. |
| 13 | Power supply for front height sensor | About 5 V | Ignition switch is at ON position. |
| 14 | — | — | — |
| 15 | — | — | — |
| 16 | Vehicle speed signal | Refer to “Reference waveform No.1: ”. | |
| 17 | Signal for right headlight leveling actuator | Less than 1 V | Lighting switch is at OFF position. |
| | | 1.0 – 12.6 V | For 10 seconds after turning lighting switch to ON position. |
| 18 | Signal for left headlight leveling actuator | Less than 1 V | Lighting switch is at OFF position. |
| | | 1.0 – 12.6 V | For 10 seconds after turning lighting switch to ON position. |
| 19 | Input signal for rear height sensor | About 2.5 V | Ignition switch is at ON position. |
| 20 | Input signal for front height sensor | About 2.5 V | Ignition switch is at ON position. |
| 21 | Ground for rear height sensor | 0 V | Ignition switch is at ON position. |
| 22 | Ground for front height sensor | 0 V | Ignition switch is at ON position. |
| 23 | Ground for right headlight leveling actuator | 0 V | Ignition switch is at ON position. |
| 24 | Ground for left headlight leveling actuator | 0 V | Ignition switch is at ON position. |

**Reference waveform No.1**
Vehicle speed signal (1).
Vehicle speed signal is pulse. Pulse frequency varies depending on vehicle speed.

| | |
|---|---|
| Measurement terminal | CH 1: “G51-16” to “G51-9” |
| Oscilloscope setting | CH 1: 200 mV<br>TIME: 40.0 ms/DIV |
| Measurement condition | Engine is running and vehicle speed 10 km/h (6 mph) |

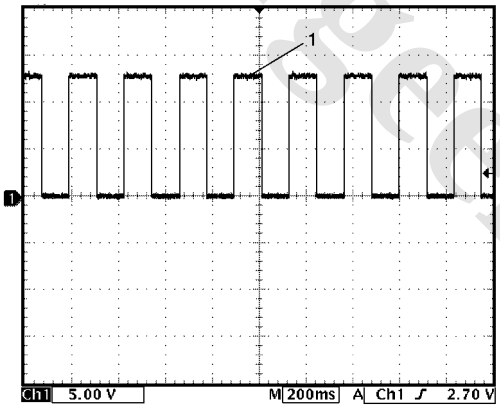

I5JB0A920037-01

www.cargeek.ir

www.CarGeek.ir


# Repair Instructions

## Headlight Housing Removal and Installation

S5JB0A9206001

**⚠ WARNING**

**Be sure to read "Precautions for Discharge Headlight Service (If Equipped): " before starting to service work.**
**Neglecting them may result in personal injury.**

### Removal

1) Disconnect negative (–) cable at battery.
2) Remove front bumper. Refer to "Front Bumper Components: in Section 9K".
3) Remove headlight mounting bolts.
4) Detach headlight housing (1) from vehicle.
5) Disconnect couplers from headlight housing (1).

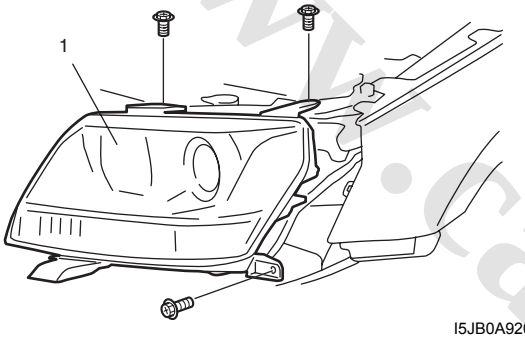


I5JB0A920015-01

### Installation

Reverse removal procedure noting the following.

- After installation, be sure to inspect and adjust aiming referring to "Headlight Aiming Adjustment with Screen: ".

## Headlight Bulb Replacement

S5JB0A9206002

**⚠ WARNING**

- **To avoid danger of being burned, don't touch when the bulb is hot.**
- **Don't touch glass surface of bulb, to avoid deteriorate as the case may be unclear when bulb light on at dirty condition.**
- **Be sure to read "Precautions for Discharge Headlight Service (If Equipped): " before starting to service work.**

### Discharge headlight Bulb

1) Check to ensure that lighting switch is at OFF position.
2) Disconnect negative (–) cable at battery.
3) Remove headlight housing referring to "Headlight Housing Removal and Installation: ".
4) Remove cover (1) from headlight housing by turning it counterclockwise.
5) Remove igniter (2) from discharge headlight bulb by turning it counterclockwise.

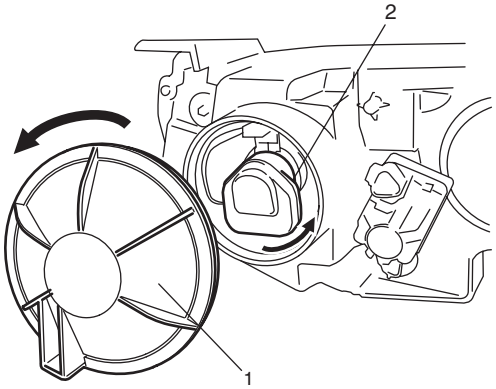


I5JB0A920016-01

6) Replace bulb (1) from headlight housing.

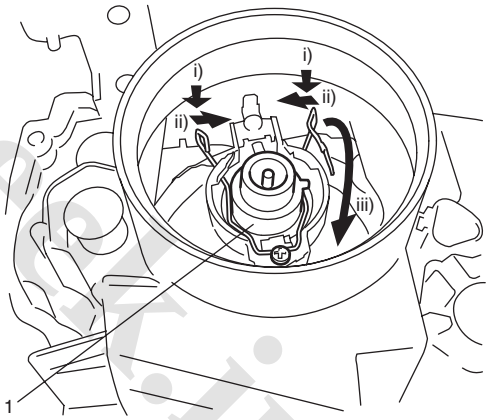


I5JB0A920017-01

7) Install igniter (2) to discharge headlight bulb by turning it clockwise.
8) Install cover to headlight housing by turning it clockwise.
9) Install headlight housing to vehicle body referring to "Headlight Housing Removal and Installation: ".
10) Connect negative (–) cable at battery.
11) After installation, be sure to inspect and adjust aiming referring to "Headlight Aiming Adjustment with Screen: ".

www.cargeek.ir

www.CarGeek.ir

### Other Than Discharge Headlight Bulb

1) Disconnect negative (–) cable at battery.
2) Disconnect coupler from bulb (1).
3) Remove socket cover (2) (if equipped).
4) Replace bulb and assemble all removed parts.

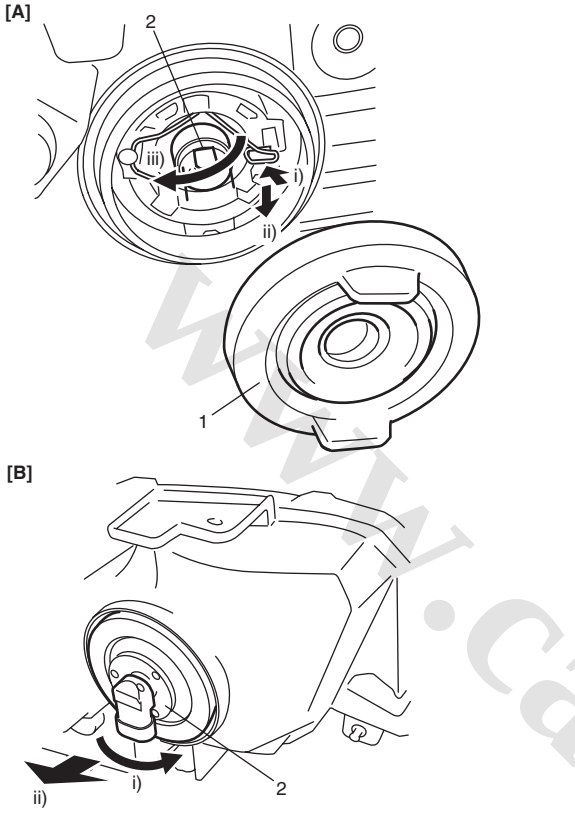


I5JB0A920018-01

| | |
|---|---|
| [A]: | 3door model or low beam of 5door model |
| [B]: | High beam of 5door model |

## Ballast Removal and Installation

S5JB0A9206023

**⚠ WARNING**

**Be sure to read "Precautions for Discharge Headlight Service (If Equipped): " carefully before working. Neglecting them may result in personal injury.**

### Removal

1) Check to ensure that lighting switch is at OFF position.
2) Disconnect negative (–) cable at battery.
3) Remove headlight housing referring to "Headlight Housing Removal and Installation: ".
4) Remove ballast (1) from headlight housing (2).
5) Disconnect connector (3) from ballast.

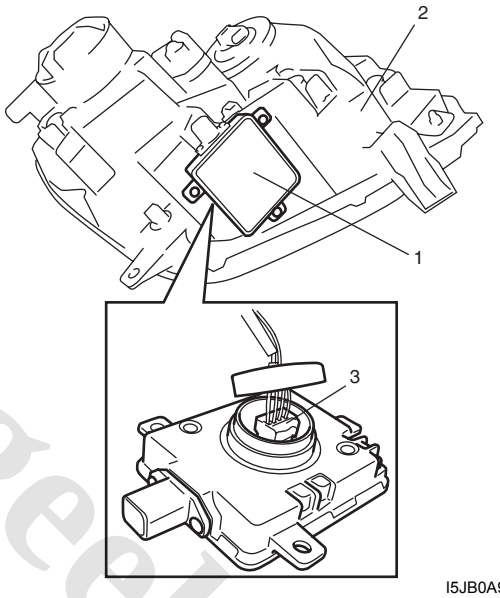


I5JB0A920019-01

### Installation

Reverse removal procedure noting the following.

- Connect connectors securely.
- After installation, be sure to inspect and adjust aiming referring to "Headlight Aiming Adjustment with Screen: ".

www.cargeek.ir

www.CarGeek.ir


## Igniter Removal and Installation

S5JB0A9206024

**⚠ WARNING**

**Be sure to read "Precautions for Discharge Headlight Service (If Equipped): " carefully before working. Neglecting them may result in personal injury.**

### Removal

1) Remove ballast referring to "Ballast Removal and Installation: ".
2) Remove cover (1) from headlight housing by turning it counterclockwise.
3) Remove igniter (2) from discharge headlight bulb by turning it counterclockwise.

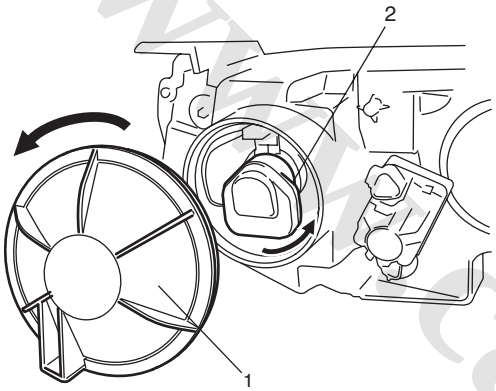


I5JB0A920020-01

4) After disconnecting ground wire (1), pull out igniter (2) from headlight housing.

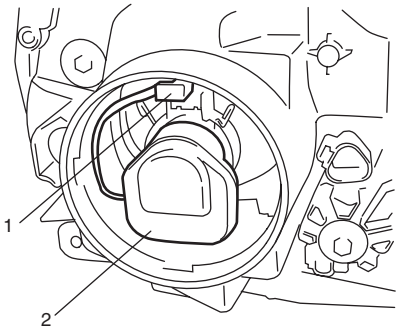


I5JB0A920021-01

### Installation

Reverse removal procedure noting the following.

- Connect connectors securely.
- After installation, be sure to inspect and adjust aiming referring to "Headlight Aiming Adjustment with Screen: ".

## Headlight Aiming Adjustment with Screen

S5JB0A9206003

**NOTE**

- **Unless otherwise obligated by local regulations, adjust headlight aiming according to the following procedure.**
- **After replacing headlight housing, be sure to adjust aiming.**
- **When inspecting and adjusting headlight with leveling system, make sure to set the leveling switch to "0" position with ignition switch turned ON.**

1) Make sure the following items.
   - Place vehicle on a flat surface in front of blank wall (screen) (1) ahead of headlight surface.

   **Distance "a"**
   **10 m (32.8 ft.)**

   - Adjust air pressure of all tires to the specified value respectively.
   - Bounce vehicle body up and down by hand to stabilize suspension.
   - Carry out aiming with a driver aboard.

   **Driver's weight**
   **75 kg (165 lb)**

2) Check to see if hot spot (high intensity zone) of each low beam axis falls as shown in figure.

   **Hot spot specification**
   **Angle "b": 0.75° (Specification)**
   **Calculated distance "H": Approx. 130 mm (5.15 in.)**

3) Align headlight aiming to specification by adjusting aiming gear if it is not set properly.

www.cargeek.ir

www.CarGeek.ir

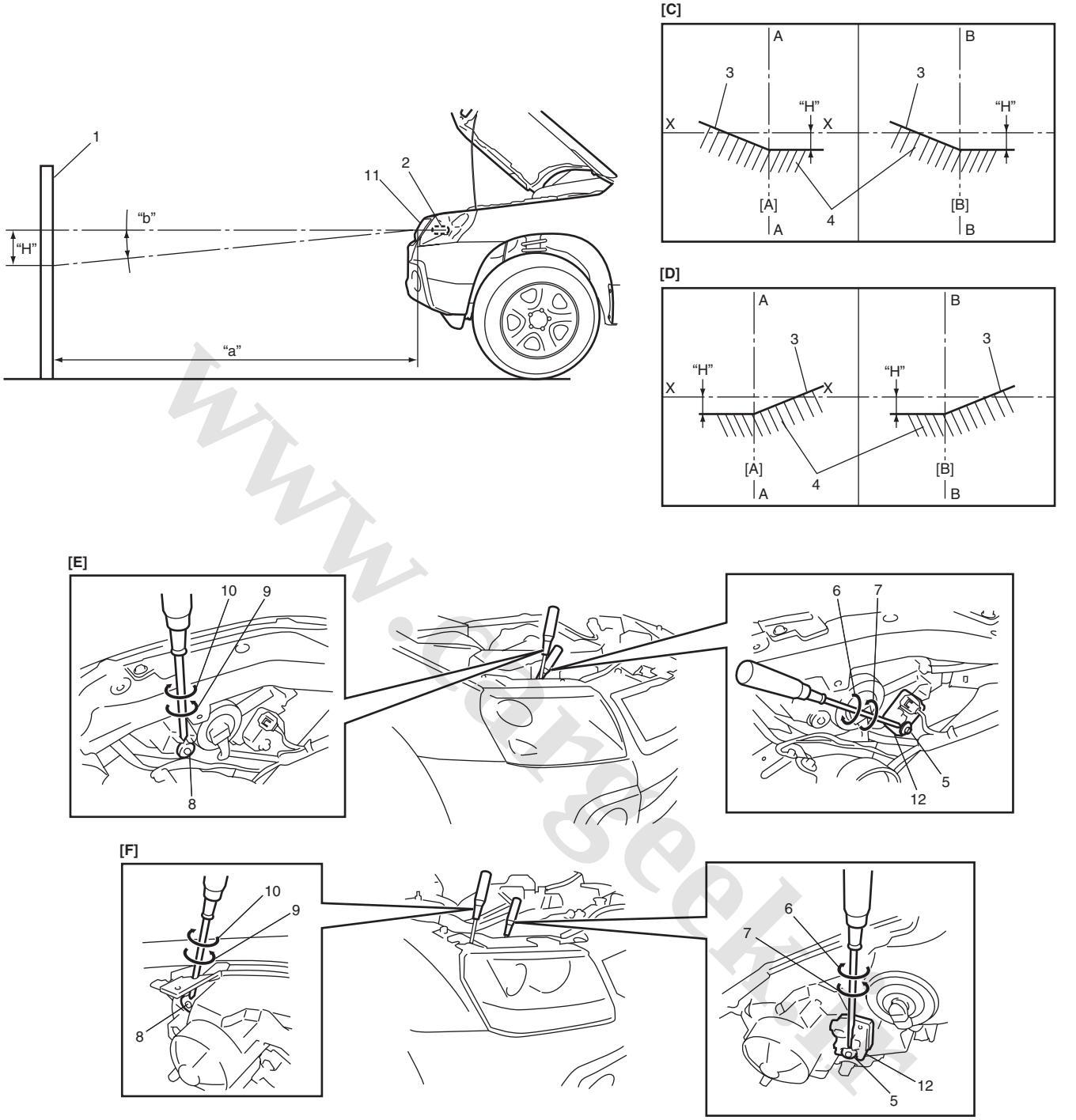


I5JB0A920022-01

| | | |
|---|---|---|
| 2. Headlight bulb | 9. Turning (for right adjustment) | [A]: Left headlight |
| 3. Cut line (bounding line) | 10. Turning (for left adjustment) | [B]: Right headlight |
| 4. Hot spot | 11. Headlight housing | [C]: RH steering vehicle shown |
| 5. Aiming gear (for up / down adjustment) | 12. Headlight leveling actuator | [D]: LH steering vehicle shown |
| 6. Turning (for up adjustment) | X-X: Horizontal center line of headlight bulbs | [E]: 3door model |
| 7. Turning (for down adjustment) | A-A: Vertical center line of left headlight bulb | [F]: 5door model |
| 8. Aiming gear (for right / left adjustment) | B-B: Vertical center line of right headlight bulb | |

www.cargeek.ir

www.CarGeek.ir


## Headlight Switch (in Lighting Switch) Removal and Installation

S5JB0A9206004

### Removal

1) Disconnect negative cable at battery.
2) Remove steering column hole cover (1).
3) Remove steering column covers (2).
   Turn steering wheel to access steering column cover screws (3).

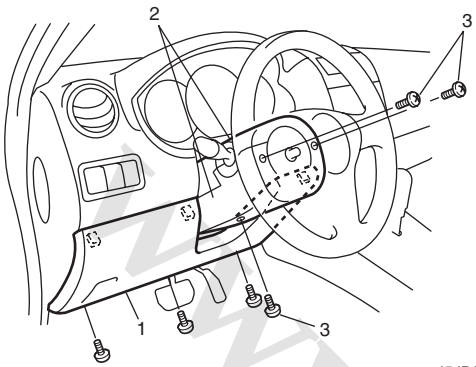


I5JB0A940020-01

4) Remove lighting switch (1) from combination switch assembly (2) and disconnect its coupler (3).

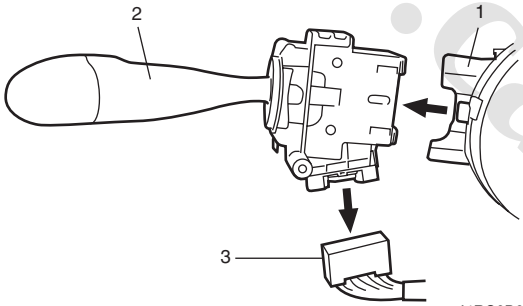


I4RS0B920005-01

### Installation

Reverse removal procedure for installation.

## Headlight Switch (in Lighting Switch) Inspection

S5JB0A9206005

Check for continuity between terminals at each switch position. If check result is not as specified, replace switch.

[A]

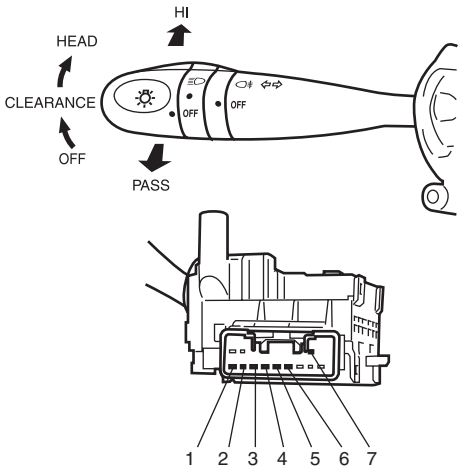


| Shaft condition \ Terminal | | 1 | 4 | 2 | 3 | 5 | 6 | 7 |
|---|---|---|---|---|---|---|---|---|
| OFF | LOW | | | | | | ○ | ○ |
| | PASS | | | | ○ | ○ | | ○ |
| | HI | | | | | ○ | | ○ |
| CLEARANCE | LOW | ○ | ○ | | | | ○ | ○ |
| | PASS | ○ | ○ | | ○ | ○ | | ○ |
| | HI | ○ | ○ | | | ○ | | ○ |
| HEAD | LOW | ○ | ○ | ○ | ○ | | ○ | ○ |
| | PASS | ○ | ○ | ○ | ○ | ○ | | ○ |
| | HI | ○ | ○ | ○ | ○ | ○ | | ○ |

[B]

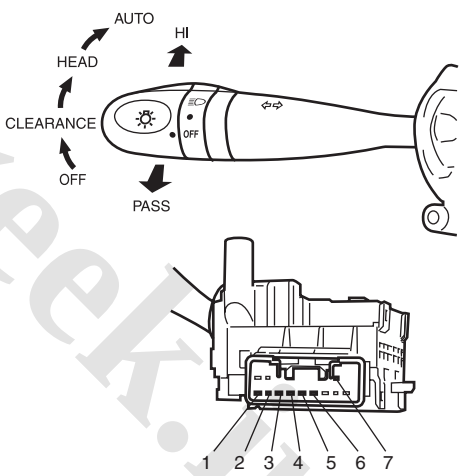


| Shaft condition \ Terminal | | 1 | 4 | 2 | 3 | 5 | 6 | 7 |
|---|---|---|---|---|---|---|---|---|
| OFF | LOW | | | | | | ○ | ○ |
| | PASS | | | | ○ | ○ | | ○ |
| | HI | | | | | ○ | | ○ |
| CLEARANCE | LOW | ○ | ○ | | | | ○ | ○ |
| | PASS | ○ | ○ | | ○ | ○ | | ○ |
| | HI | ○ | ○ | | | ○ | | ○ |
| HEAD | LOW | ○ | ○ | | ○ | | ○ | ○ |
| | PASS | ○ | ○ | | ○ | ○ | | ○ |
| | HI | ○ | ○ | | ○ | ○ | | ○ |
| AUTO | LOW | | | ○ | ○ | ○ | ○ | ○ |
| | PASS | | | ○ | ○ | | | ○ |
| | HI | | | ○ | ○ | ○ | | ○ |

I5JB0A920023-01

| | |
|---|---|
| [A]: | Without auto-on headlight system |
| [B]: | With auto-on headlight system |

www.cargeek.ir

www.CarGeek.ir

### Headlight Relay Inspection

1) Disconnect negative (–) cable at battery.
2) Remove headlight relay from main fuse box.
3) Check that there is no continuity between terminal “3” and “4”. If there is continuity, replace relay.
4) Connect battery positive (+) terminal to terminal “2” of relay and battery negative (–) terminal to terminal “1” of relay.
5) Check continuity between terminal “3” and “4”. If there is no continuity when relay is connected to the battery, replace relay.

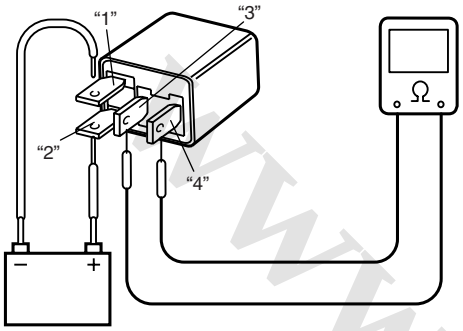


I4RS0A920022-01

## Hazard Warning Switch Removal and Installation

S5JB0A9206006

### Removal

1) Disconnect negative (–) cable at battery.
2) Remove audio unit referring to “Audio Unit Removal and Installation: in Section 9C”.
3) Remove center ventilation louver (1) referring to “Center Ventilation Louver Removal and Installation: in Section 7A”.
4) Disconnect coupler, and then remove hazard warning switch (2) from center ventilation louver (1).

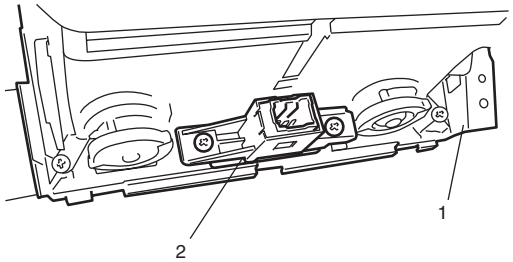


I5JB0A920024-01

### Installation

Reverse removal procedure for installation.

## Hazard Warning Switch Inspection

S5JB0A9206007

Check for continuity between terminals at each switch position. If check result is not as specified, replace switch.

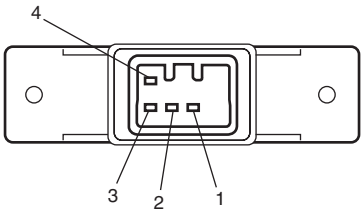


| Switch Position \ Terminal | 1 | 2 | 3 | 4 |
|---|---|---|---|---|
| OFF | | | ○ | ○ |
| ON | ○ | ○ | | |

I5JB0A920025-01

## Stop (Brake) Lamp Switch Inspection

S5JB0A9206008

Check stop (brake) lamp switch for continuity between terminals at each switch position.
If check result is not as specified, replace switch.

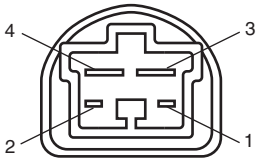


| Shaft condition \ Terminal | 1 | 2 | 3 | 4 |
|---|---|---|---|---|
| FREE | | | ○ | ○ |
| PUSH | ○ | ○ | | |

I5RS0A920001-01

www.cargeek.ir

www.CarGeek.ir


## Turn Signal Light Switch (in Lighting Switch) Removal and Installation

S5JB0A9206009

For removal and Installation, refer to “Headlight Switch (in Lighting Switch) Removal and Installation: ”.

## Turn Signal Light Switch (in Lighting Switch) Inspection

S5JB0A9206010

Check for continuity between terminals at each switch position. If check result is not as specified, replace switch.

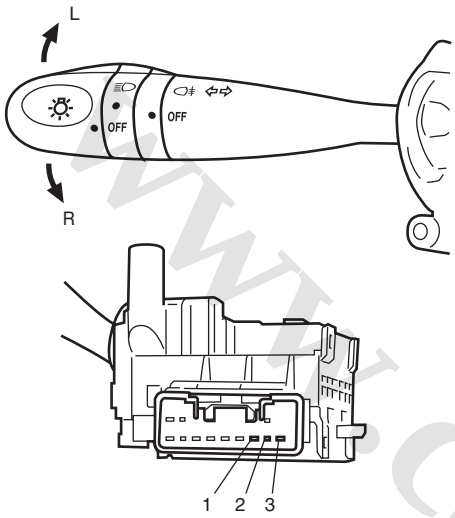


| Turn signal SW \ Terminal | 1 | 2 | 3 |
|---|---|---|---|
| L | | ○ | ○ |
| N | | | |
| R | ○ | ○ | |

I4RS0B920009-01

## Turn Signal and Hazard Warning Relay Removal and Installation

S5JB0A9206011

### Removal

1) Disconnect negative (–) cable at battery.
2) Remove turn signal and hazard warning relay (1) from junction block (2).

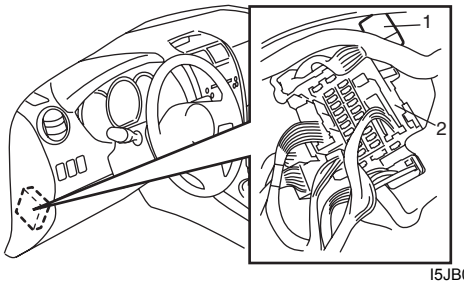


I5JB0A920026-01

### Installation

Reverse removal procedure for installation.

## Turn Signal and Hazard Warning Relay Inspection

S5JB0A9206025

1) Remove turn signal and hazard warning relay (1) from junction block (2).
2) Connect connector to turn signal and hazard warning relay.
3) Turn ignition switch to ON position.
4) Check turn signal and hazard warning relay for operation.
   - Check that left side turn signal lamps flash when 5 terminals of turn signal and hazard warning relay and vehicle body ground are connected using service wire (3).
   - Check that right side turn signal lamps flash when 6 terminals of turn signal and hazard warning relay and vehicle body ground are connected using service wire.
   - Check that left and side turn signal lamps flash when 8 terminals of turn signal and hazard warning relay and vehicle body ground are connected using service wire.If turn signal lamps do not flash, check power supply and ground circuits of turn signal and hazard warning relay.

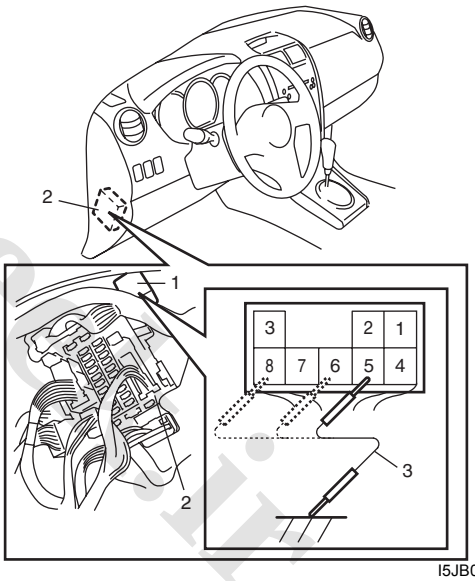


I5JB0A920027-01

www.cargeek.ir

www.CarGeek.ir

## License Lamp Assembly Removal and Installation

S5JB0A9206013

### Removal

1) Disconnect negative (–) cable at battery.
2) Disconnect coupler (1) from license lamp assembly (2).
3) Push locking part to arrow direction, and then remove license lamp assembly (2).

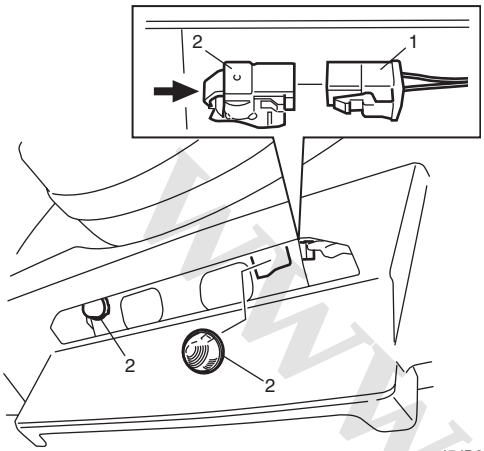


I5JB0A920028-01

### Installation

Reverse removal procedure for installation.

## Front Fog Light Assembly Removal and Installation (If Equipped)

S5JB0A9206014

### Removal

1) Disconnect negative (–) cable at battery.
2) Remove front bumper. Refer to “Front Bumper Components: in Section 9K”.
3) Disconnect coupler (1) from fog light (2).
4) Remove fog light screws (3), and remove front fog light assembly (2).

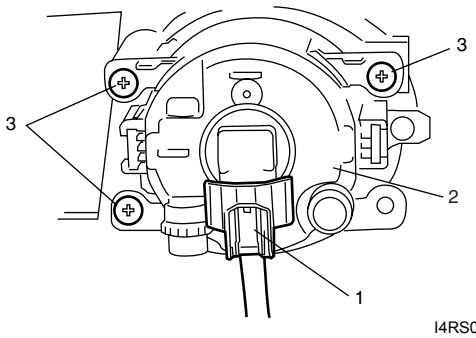


I4RS0A920019-01

### Installation

Reverse removal procedure for installation nothing the following:

- After installing, adjust aiming referring to “Front Fog Light Aiming Adjustment with Screen (If Equipped): ”.

## Front Fog Light Bulb Replacement (If Equipped)

S5JB0A9206015

**⚠ WARNING**

- **To avoid danger of being burned, don’t touch when the bulb is hot.**
- **Don’t touch glass surface of bulb to avoid deteriorate as the case may be unclear when bulb light on at dirty condition.**

1) Remove front bumper referring to “Front Bumper Components: in Section 9K”.
2) Remove fog light bulb (1) as shown.

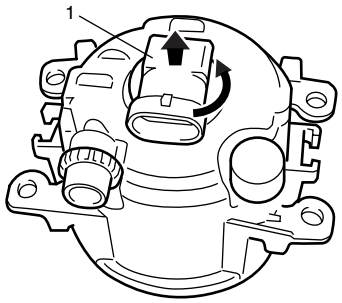


I4RS0A920020-01

3) Replace fog light bulb and assemble all removed parts.

www.cargeek.ir

www.CarGeek.ir


## Front Fog Light Switch Inspection (If Equipped)

S5JB0A9206016

**NOTE**

**Front fog lights light up only when headlight switch is in HEADLIGHT position (low or high beams) or SMALL position. Front fog lights turn OFF automatically when headlight switch is turned to OFF position. If front fog light switch holds ON position, front fog lights turn ON automatically when headlight switch is tuned to HEADLIGHT position (low or high beams) or SMALL position again.**

Check for continuity between terminals at each switch position. If check result is not as specified, replace switch.

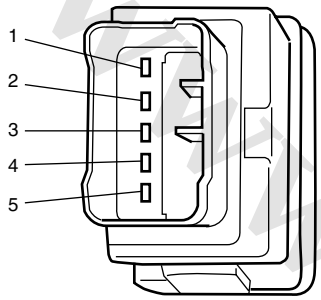


| Terminal / Switch Position | 2 | 3 | 1 | 5 | 4 |
|---|---|---|---|---|---|
| OFF | | ○—◎—○ | | ○—◎—○ | |
| ON (PUSH IN) | ○— | ○—◎—○ | | | |

I4RS0A920021-01

## Front Fog Light Relay Inspection (If Equipped)

S5JB0A9206017

1) Disconnect negative (–) cable from battery.
2) Remove front fog light relay (included in integration relay) (1) from main fuse box (2).

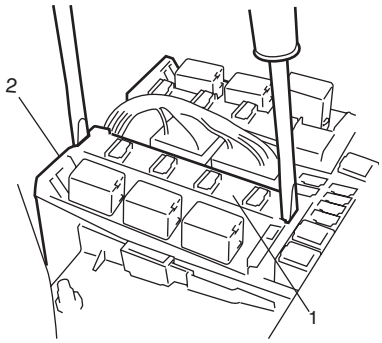


I5JB0A920029-01

3) Check that there is no continuity between terminals “a” and “b”.
If there is continuity, replace relay.
Check that there is continuity between terminals “a” and “b” when a 12 V battery is connected to terminal “c” and “d”.
If malfunction is found, replace integration relay.

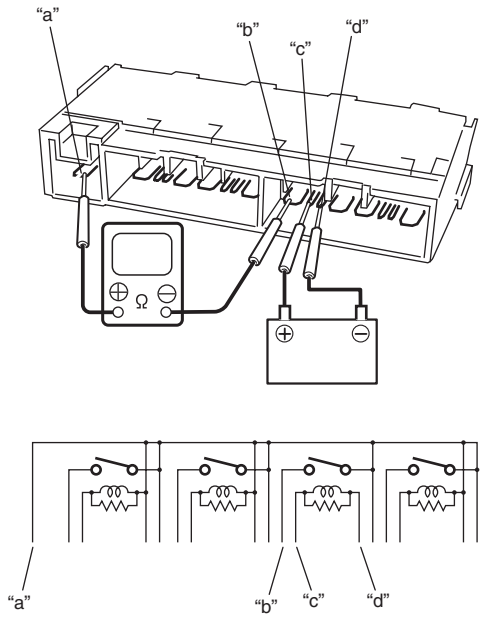


I5JB0A920030-03

## Front Fog Light Aiming Adjustment with Screen (If Equipped)

S5JB0A9206018

### Basic Aiming

**NOTE**

- **Unless otherwise obligated by local regulations, adjust front fog light aiming according to the following procedure.**
- **An example in case that the light-to-wall distance 10 m is shown in the illustration. The beam descending distance “H” is calculated when “a” is 10 m with the specification angle “b” (1.75°).**

1) Make sure the following items.
   - Place vehicle on a flat surface in front of blank wall (screen) (1) ahead of front fog light surface.

     **<u>Distance between screen and front fog light</u>**
     **“a”: 10 m (32.8 ft.)**
   - Adjust air pressure of all tired to the specified value respectively.
   - Bounce vehicle body up and down by hand to stabilize suspension.
   - Carry out aiming with a driver aboard.

     **<u>Driver’s weight</u>**
     **75 kg (165 lb)**
2) Check to see if hot spot (high intensity zone) of each front fog light axis falls as shown in the figure.

   **<u>Hot spot specification</u>**
   **Angle “b”: 1.75° (Specification)**
   **Calculated distance “H”: Approx. 300 mm (11.81 in.)**

www.cargeek.ir

www.CarGeek.ir

3) If it is not set properly, align front fog light to specification by rotating aiming gear.

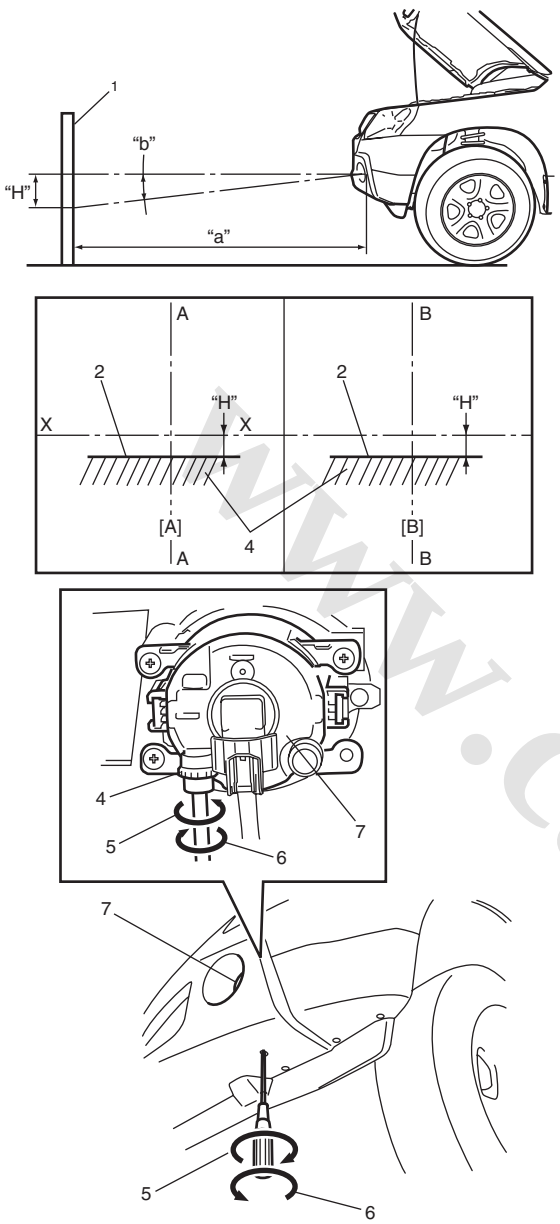


I5JB0A920031-02

| | |
|---|---|
| 2. | Bounding line |
| 3. | Hot spot |
| 4. | Aiming gear (for up / down adjustment) |
| 5. | Turning (for up adjustment) |
| 6. | Turning (for down adjustment) |
| 7. | Front fog light assembly |
| X-X: | Horizontal center line of front fog light bulb |
| A-A: | Vertical center line of left front fog light bulb |
| B-B: | Vertical center line of right front fog light bulb |
| [A]: | Left front fog light |
| [B]: | Right front fog light |

## Headlight Manual Leveling Switch (If Equipped) Inspection

S5JB0A9206019

Check for continuity between terminals at each switch position.
If check result is not as specified, replace switch.

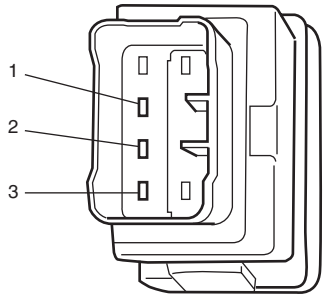


| Switch Position | Terminal | Resistance (Ω) |
|---|---|---|
| - | 1 and 2 | 4370 - 4830 |
| 0 | 1 and 3 | 646 - 714 |
| | 2 and 3 | 3724 - 4116 |
| 1 | 1 and 3 | 1292 - 1428 |
| | 2 and 3 | 3078 - 3402 |
| 2 | 1 and 3 | 1938 - 2142 |
| | 2 and 3 | 2432 - 2688 |
| 3 | 1 and 3 | 2584 - 2856 |
| | 2 and 3 | 1786 - 1974 |
| 4 | 1 and 3 | 3230 - 3570 |
| | 2 and 3 | 1140 - 1260 |

I4RS0B920012-01

www.cargeek.ir

www.CarGeek.ir


## Headlight Leveling Actuator Inspection (If Equipped)

S5JB0A9206026

**Vehicle equipped with headlight auto leveling system**

1) Make sure all couplers of headlight and leveling actuator are connected securely.
2) Park vehicle in front of blank wall (screen).
3) Turn ignition switch to ON position.
4) Perform “Headlight Leveling Warning Light Check: ”.
5) Connect service wire (2) to terminals of diagnosis connector (1).
6) Perform Steps a) through c) described below within 20 seconds after Step 5).
   a) Turn lighting switch (3) to “HEAD” position and then turn lighting switch to OFF position.
   b) Repeat Step a) 2 times.
   c) Turn lighting switch (3) to “HEAD” position.

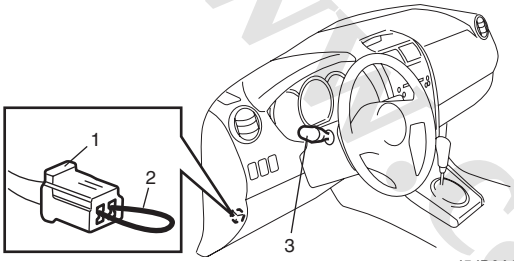


I5JB0A920032-01

7) Check that optical axes of headlights reflected on blank wall (screen) change. If not, go to “Headlight Auto Leveling System Symptom Diagnosis (If Equipped): ”.

**Vehicle equipped with manual leveling headlight system**

1) Make sure all couplers of headlight and leveling actuator are connected securely.
2) Park vehicle in front of blank wall (screen).
3) Turn ignition switch to ON position.
4) Turn lighting switch to “HEAD” position.
5) Move manual leveling headlight switch and check that optical axes of headlights reflected on blank wall (screen) change then.Also check that leveling actuator sounds slightly while moving leveling switch. If optical axes do not change, go to “Headlight Manual Leveling System Symptom Diagnosis (If Equipped): ”.

## Rear Fog Light Switch Inspection (If Equipped)

S5JB0A9206020

**NOTE**

- **Rear fog light switch can be turned to ON position only when headlight switch is turned to HEADLIGHT position (low or high beams).**
- **Rear fog light switch turns OFF automatically when headlight switch is turned to OFF position.**

Check for continuity between terminals at each switch position.
If check result is not as specified, replace switch.

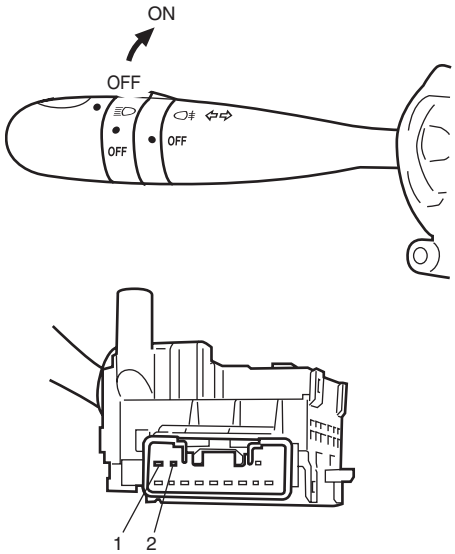


| Shaft condition \ Terminal | 1 | 2 |
|---|---|---|
| OFF | | |
| ON | ○ | ○ |

I4RS0B920013-01

www.cargeek.ir

www.CarGeek.ir

## Height Sensor Removal and Installation (If Equipped)

S5JB0A9206027

### Removal

**⚠ CAUTION**

- **Do not remove bracket (4) and link (3) from height sensor (2). Removal will spoil its original function. If faulty condition is found, replace it with new one in a set.**
- **If height sensor was dropped from a height of 30 cm (0.9 ft) or more, replace it with new one.**

1) Disconnect negative (–) cable at battery.
2) Disconnect height sensor connector (1) from height sensor (2).
3) Remove front height sensor with its bracket (4) from suspension frame (6) and lower arm (5).

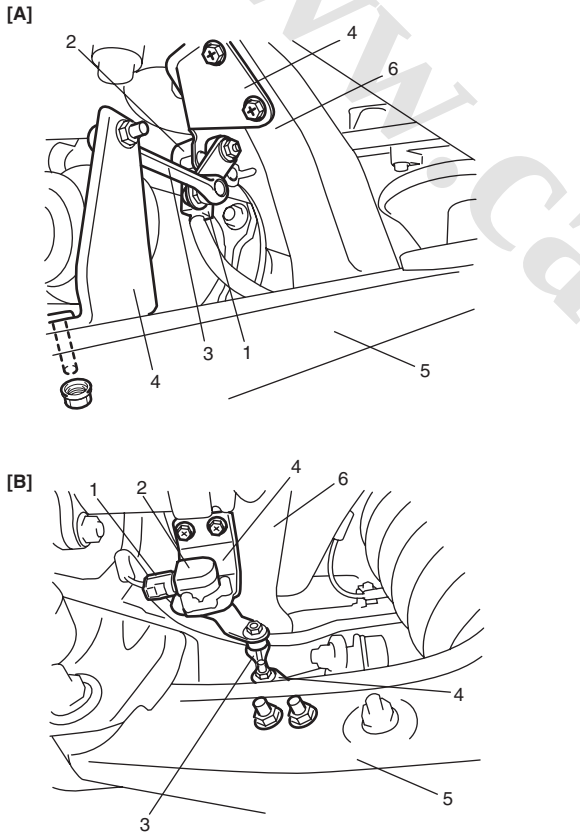


I5JB0A920033-02

| [A]: Front | [B]: Rear |
|---|---|

### Installation

For installation, reverse removal procedure noting the following.

- Check that bracket and link of height sensor are not deformed.
- Tighten height sensor bolts and nuts to specified torque.

**Tightening torque**
**Height sensor bolt (a): 8 N·m (0.8 kgf-m, 6.0 lb-ft)**
**Height sensor nut (b): 8 N·m (0.8 kgf-m, 6.0 lb-ft)**

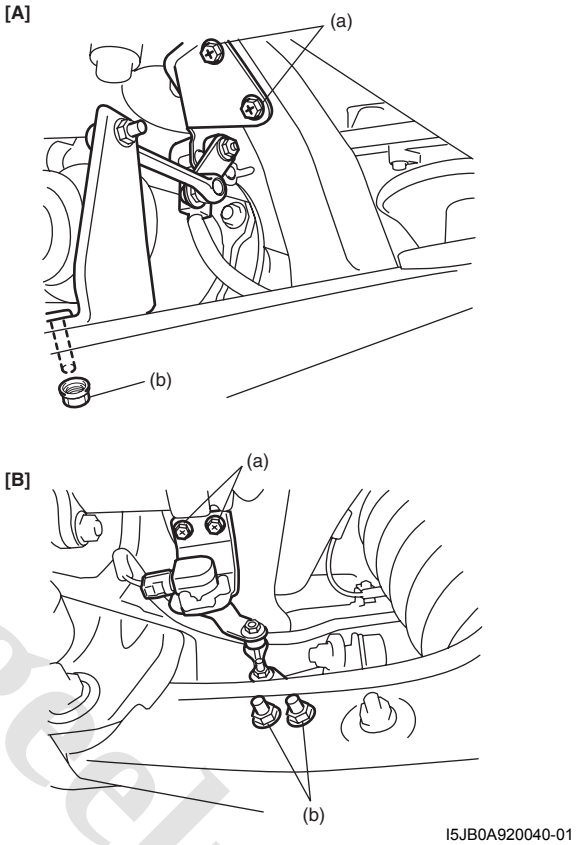


I5JB0A920040-01

| [A]: Front | [B]: Rear |
|---|---|

- Connect connector securely.
- After installation, initialize auto leveling headlight system referring to “Initialization of Auto Leveling Headlight System: ”.

www.cargeek.ir

www.CarGeek.ir


## Height Sensor and Its Circuit Inspection (If Equipped)

S5JB0A9206028

1) Remove front or rear height sensor from vehicle referring to “Height Sensor Removal and Installation (If Equipped): ”.
2) Connect connector to height sensor.
3) Vary position of height sensor link (1) and measure voltage between terminals of headlight auto leveling control module (4) as described below.
   - For front height sensor
     Between “G51-20” and “G51-22” terminals of headlight leveling control module.
   - For rear height sensor
     Between “G51-19” and “G51-21” terminals of headlight leveling control module.
     If check result is not as specified, perform inspections of power supply, ground and signal circuits of front or rear height sensor which is described under “Inspection of Headlight Leveling Control Module and Its Circuit (Vehicle Equipped With Auto Leveling Headlight System): ”. If circuits are OK, replace height sensor.

**Height sensor output voltage**
**Full bound position (2): about 0.5 V**
**Full rebound position (3): about 4.5 V**

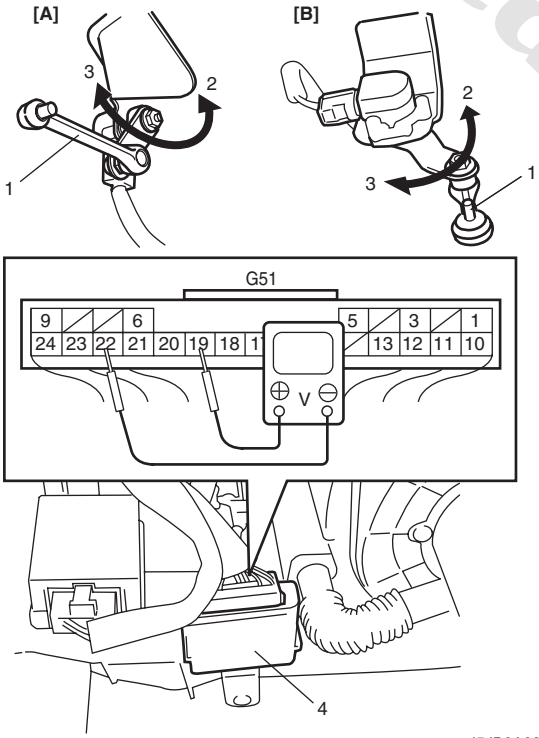


I5JB0A920034-02

| [A]: Front | [B]: Rear |
|---|---|

## Leveling Control Module Removal and Installation (If Equipped)

S5JB0A9206029

### Removal

1) Disconnect negative (–) cable at battery.
2) Disconnect connector (1) from headlight leveling control module (2).
3) Remove headlight leveling control module with its bracket from heater unit (3).

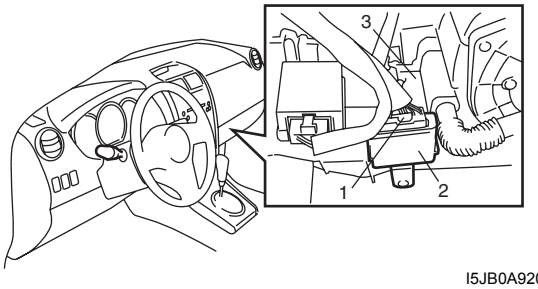


I5JB0A920035-01

### Installation

For installation, reverse removal procedure noting the following.

- Connect connector securely.
- After replacing headlight leveling control module with new one, initialize auto leveling headlight system referring to “Initialization of Auto Leveling Headlight System: ”.

## Initialization of Auto Leveling Headlight System

S5JB0A9206030

Initialization of the auto leveling headlight system is to make the headlight leveling control module learn signals which are fed from the height sensors when the vehicle is at the standard height. Standard height means the height of the vehicle with a driver but without load in it. Initialization of the auto leveling headlight system is required when any of the following works has been performed.

- Replacement of headlight leveling control module
- Removal of front and/or rear height sensor link from lower arm
- Removal of front and/or rear height sensor from suspension frame
- Replacement of front and/or rear height sensor

www.cargeek.ir

www.CarGeek.ir

Without initialization of the auto leveling headlight system, it is not possible to obtain its proper function. Also, if the auto leveling headlight system is not initialized after replacing the headlight leveling control module, the headlight leveling warning light in the combination meter flashes.

1) Observe the following instructions.
   - Park vehicle on level ground.
   - Adjust air pressure of all tires to the specified value respectively.
   - Bounce vehicle body up and down by hand to stabilize suspension.
2) Turn ignition switch to ON position.
3) Perform “Headlight Leveling Warning Light Check: ”.
4) Connect service wire (2) to terminals of diagnosis connector (1).
5) Perform Steps a) through b) described blow within 20 seconds after Step 4).
   a) Turn lighting switch (3) to “HEAD” position and then turn lighting switch to OFF position.
   b) Repeat Step a) 2 times.

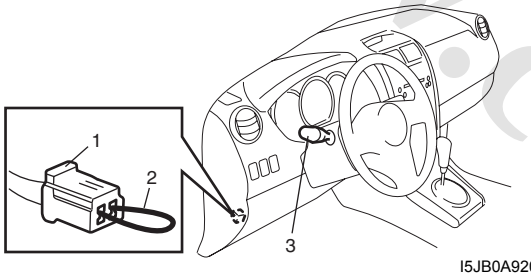


I5JB0A920032-01

6) Confirm that headlight leveling warning light flashes 3 times and turns off, which indicates that system initialization was completed properly. If it does not turn off after flashing 3 times, it means initialization was not successful. In such case, turn off ignition switch and perform Steps 1) to 6) again.

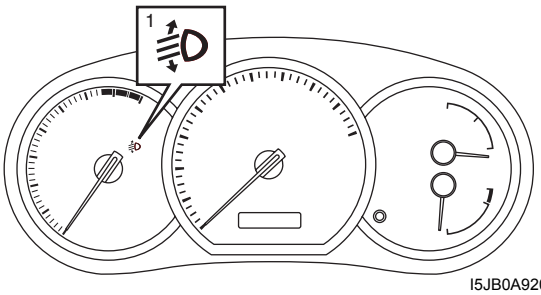


I5JB0A920012-01

## Illumination Cancel Switch (If Equipped) Inspection

S5JB0A9206021

Check for continuity between terminals at each switch position.
If check result is not as specified, replace switch.

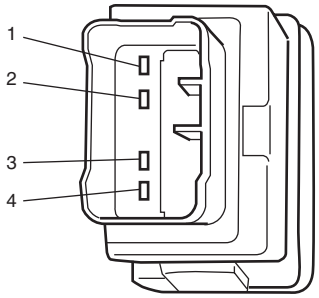


| Terminal / Switch Position | 1 | 2 | 3 | 4 |
|---|---|---|---|---|
| OFF | ○ | | ○ ◎ | ○ |
| ON (PUSH IN) | | ○ | ○ ◎ | ○ |

I4RS0B920014-01

www.cargeek.ir
www.cargeek.ir

www.CarGeek.ir


### Auto-On Headlight Sensor Inspection (If Equipped)

S5JB0A9206031

1) Disconnect negative (–) cable at battery.
2) Remove auto-on headlight sensor (1) located on the passenger side of the dashboard (2). Be careful not to damage the sensor (1) and dashboard by using rag (3).

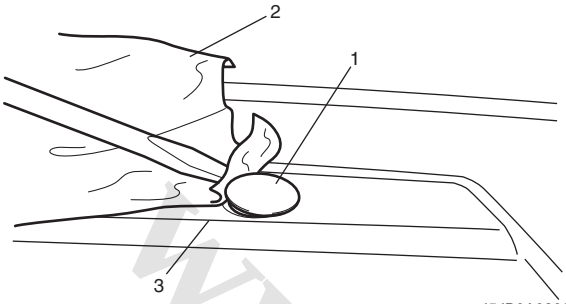

I5JB0A920038-01

3) Measure voltage between white wire terminal and black wire terminal at the following condition.
If measured voltage is out of specification, replace sensor.

**Auto-on headlight sensor voltage specifications**
**Cover the sensor lens with hand: 0.4 V**
**Light the sensor lens with incandescent lamp 100 W: 3 – 4.5 V**

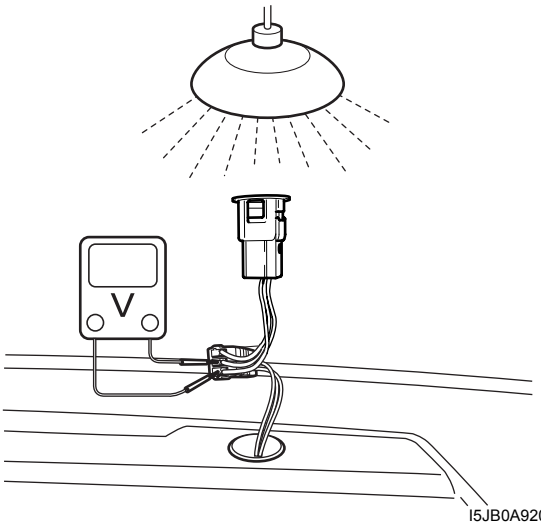

I5JB0A920039-01

## Specifications

### Tightening Torque Specifications

S5JB0A9207001

| Fastening part | Tightening torque | | | Note |
|---|---|---|---|---|
| | N·m | kgf-m | lb-ft | |
| Height sensor bolt | 8 | 0.8 | 6.0 | ☞ |
| Height sensor nut | 8 | 0.8 | 6.0 | ☞ |

**Reference:**
For the tightening torque of fastener not specified in this section, refer to “Fastener Information: in Section 0A”.

www.cargeek.ir

 www.CarGeek.ir

# Instrumentation / Driver Info. / Horn

## Precautions

### Precautions in Diagnosing Troubles for Combination Meter

S5JB0A9300001

- Combination meter uses signals (information) from each control module by CAN communication to control speedometer, tachometer, fuel meter, engine coolant temp meter, warning light and indicator light (other than air bag warning light, headlight leveling warning light, rear fog light and turn signal indicator lamp). Therefore, check that no DTC is detected in each module before performing combination meter symptom diagnosis. If any DTC is detected, correct trouble indicated by that DTC troubleshooting first.
- Seat belt reminder can be canceled by scan tool or specified procedure. If neither warning buzzer nor seat belt reminder light operates, first confirm that seat belt reminder is not selected referring to “Scan Tool Data:  in Section 10B”. For further details, refer to “Seat Belt Construction:  in Section 8A”.

## General Description

### CAN Communication Data of Combination Meter

S5JB0A9301001

Combination meter communicates with each control module about the following information. For details of CAN communication, refer to “CAN Communication System Description:  in Section 1A”.

- Data from ECM
  - Engine revolution speed signal
  - Engine coolant temperature signal
  - Vehicle speed signal
  - Malfunction indicator lamp (MIL) control signal
  - Immobilizer indicator lamp control signal
  - Fuel level signal
  - “CRUSE” and “SET” indicator lamp control signal (if equipped)
  - Diagnostic trouble code (DTC) of ECM
- Data from TCM (A/T model)
  - Transmission range sensor signal (A/T selector lever position indicator)
  - Malfunction indicator lamp (MIL) control signal
  - Automatic transmission mode indicator lamp control signal
  - Diagnostic trouble code (DTC) of TCM
- Data from BCM
  - Brake fluid level switch signal (brake warning light control signal)
  - Parking brake switch signal (brake warning light control signal)
  - Driver side seat belt buckle switch signal (Seat belt warning light control signal)
  - Charging system warning lamp signal (Charge warning light control signal)
  - Engine oil pressure switch signal (Oil pressure warning light control signal)
  - Lighting switch signal (illumination indicator light control signal)
  - Door switch signal (door ajar warning lamp)
  - HI beam indicator control signal
  - Diagnostic trouble code (DTC) of BCM
- Data from 4WD control module (if equipped)
  - 4WD shift position indicator lamp control signal
  - Diagnostic trouble code (DTC) of 4WD control module

www.cargeek.ir

- Data from ABS control module (if equipped)
  - ABS warning lamp control signal
  - EBD warning light control signal (brake warning light control signal)
  - Diagnostic trouble code (DTC) of ABS hydraulic unit/control module
- Data from keyless start control module (if equipped)
  - Key indicator lamp control signal

# Schematic and Routing Diagram

## Combination Meter Circuit Diagram

S5JB0A9302001

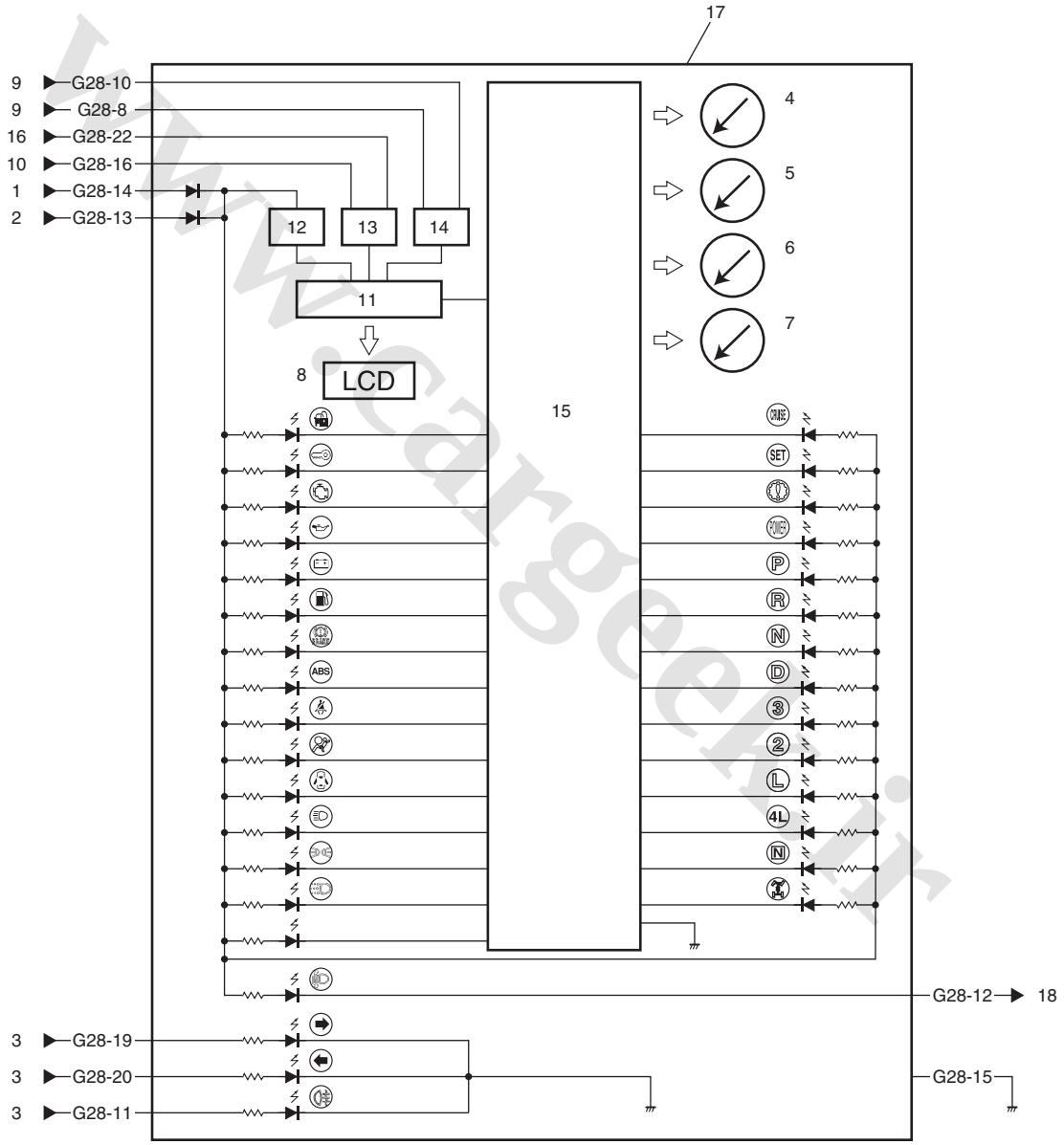


I5JB0A930001-04

| | | | |
|---|---|---|---|
| 1. Main fuse | 6. Fuel meter | 11. CPU | 16. Illumination cancel switch (if equipped) |
| 2. METER fuse | 7. ECT meter | 12. Power supply | 17. Combination meter |
| 3. Combination switch | 8. ODO-TRIP | 13. Interface circuit | 18. Headlight auto leveling control module |
| 4. Tacho meter | 9. Junction connector | 14. CAN driver | |
| 5. Speedometer | 10. SDM | 15. Stepper motor and LED output driver | |

www.cargeek.ir

 www.CarGeek.ir

### Terminal arrangement of coupler viewed from combination meter side

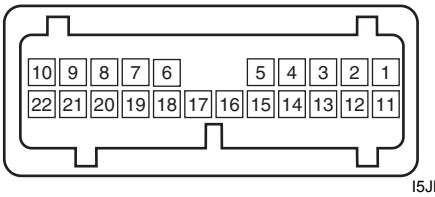


I5JB0A930002-01

| Terminal | Circuit | Terminal | Circuit |
|---|---|---|---|
| G28-1 | — | G28-12 | To headlight auto leveling control module |
| G28-2 | — | G28-13 | Power source |
| G28-3 | — | G28-14 | Backup power source |
| G28-4 | — | G28-15 | GND |
| G28-5 | — | G28-16 | To SDM (Air bag warning lamp signal) |
| G28-6 | — | G28-17 | — |
| G28-7 | — | G28-18 | — |
| G28-8 | CAN communication line (Active Low Signal) | G28-19 | To turn signal light switch (turn L) |
| G28-9 | — | G28-20 | To turn signal light switch (turn R) |
| G28-10 | CAN communication line (Active High Signal) | G28-21 | — |
| G28-11 | To rear fog light switch | G28-22 | To illumination cancel switch |

# Component Location

## Audio System Component Location

S5JB0A9303001

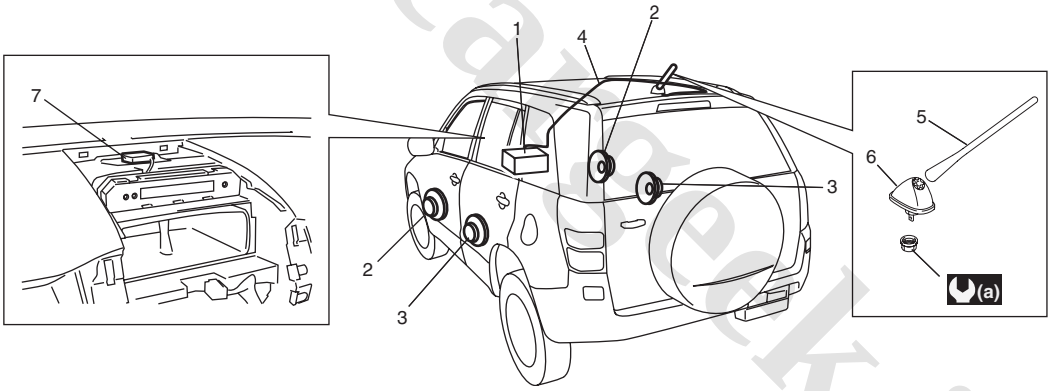


I5JB0A930003-01

| | | |
|---|---|---|
| 1. Radio or navigation assembly | 4. Antenna feeder | 7. GPS antenna (if equipped) |
| 2. Front speaker | 5. Antenna | (a) : 10 N·m (1.0 kgf-m, 7.5 lb-ft) |
| 3. Rear speaker | 6. Antenna base | |

www.cargeek.ir

# Diagnostic Information and Procedures

## Speedometer Symptom Diagnosis

S5JB0A9304022

| Condition | Possible cause | Correction / Reference Item |
|---|---|---|
| ***Speedometer shows no operation or incorrect operation*** | Circuit fuse blown | *Replace fuse and check for short circuit.* |
| | Data (information) can not be received by CAN communication | *Check ECM for DTC referring to "DTC Check: in Section 1A".* |
| | Rear wheel speed sensor or sensor ring faulty | *Check rear wheel speed sensor or sensor ring referring to "Rear Wheel Speed Sensor Inspection: in Section 4E" or "Rear Wheel Encoder On-Vehicle Inspection: in Section 4E".* |
| | Wiring or ground faulty | *Repair circuit.* |
| | Combination meter faulty | *Replace combination meter.* |
| | ECM faulty | *Replace after making sure that none of above parts is faulty.* |

## Tacho meter Symptom Diagnosis

S5JB0A9304023

| Condition | Possible cause | Correction / Reference Item |
|---|---|---|
| ***Tacho meter shows no operation or incorrect operation*** | Circuit fuse blown | *Replace fuse and check for short circuit.* |
| | Data (information) can not be received by CAN communication | *Check ECM for DTC referring to "DTC Check: in Section 1A".* |
| | Wiring or ground faulty | *Repair circuit.* |
| | Combination meter faulty | *Replace combination meter.* |
| | ECM faulty | *Replace after making sure that none of above parts is faulty.* |

## Engine Coolant Temperature (ECT) Meter Symptom Diagnosis

S5JB0A9304024

| Condition | Possible cause | Correction / Reference Item |
|---|---|---|
| ***Engine coolant temperature (ECT) meter shows no operation or incorrect operation*** | Circuit fuse blown | *Replace fuse and check for short circuit.* |
| | Data (information) can not be received by CAN communication | *Check ECM for DTC referring to "DTC Check: in Section 1A".* |
| | ECT sensor faulty | *Check ECT sensor referring to "Engine Coolant Temperature (ECT) Sensor Inspection: in Section 1C".* |
| | Wiring or ground faulty | *Repair circuit.* |
| | Combination meter faulty | *Replace combination meter.* |
| | ECM faulty | *Replace after making sure that none of above parts is faulty.* |

## Fuel Meter Symptom Diagnosis

S5JB0A9304025

| Condition | Possible cause | Correction / Reference Item |
|---|---|---|
| ***Fuel meter shows no operation or incorrect operation*** | Circuit fuse blown | *Replace fuse and check for short circuit.* |
| | Data (information) can not be received by CAN communication | *Check ECM for DTC referring to "DTC Check: in Section 1A".* |
| | Fuel level sensor faulty | *Check fuel level sensor referring to "Fuel Level Sensor Inspection: ".* |
| | Wiring or ground faulty | *Repair circuit.* |
| | Combination meter faulty | *Replace combination meter.* |
| | ECM faulty | *Replace after making sure that none of above parts is faulty.* |

www.cargeek.ir

 www.CarGeek.ir

## Low Fuel Warning Light Symptom Diagnosis

S5JB0A9304026

**NOTE**

**Confirm that fuel meter is in good condition before referring to the following possible causes.**

- **When fuel level meter circuit is shorted to ground circuit, fuel level meter indicates empty even if fuel tank does not empty.**
- **The low fuel warning light comes ON when fuel level is lower than specification below.**

**Low fuel warning light operation:**

| Low fuel warning light operation: | Fuel amount: | Resistance of fuel level sensor: |
|---|---|---|
| ON | Approx. 8.3 liter (G16 engine model)<br>Approx. 9.9 liter (J20 engine model) | 250.8 – 255.8 Ω |

| Condition | Possible cause | Correction / Reference Item |
|---|---|---|
| ***Low fuel warning light does not come ON when fuel level is lower than specification*** | Circuit fuse blown | *Replace fuse and check for short circuit.* |
| | Data (information) can not be received by CAN communication | *Check ECM for DTC referring to "DTC Check: in Section 1A".* |
| | Fuel level sensor faulty | *Check fuel level sensor referring to "Fuel Level Sensor Inspection: ".* |
| | Wiring or ground faulty | *Repair circuit.* |
| | Combination meter faulty | *Replace combination meter.* |
| | ECM faulty | *Replace after making sure that none of above parts is faulty.* |
| ***Low fuel warning light comes ON steady*** | Low fuel | *Refill fuel.* |
| | Data (information) can not be received by CAN communication | *Check ECM for DTC referring to "DTC Check: in Section 1A".* |
| | Fuel level sensor faulty | *Check fuel level sensor referring to "Fuel Level Sensor Inspection: ".* |
| | Combination meter faulty | *Replace combination meter.* |
| | ECM faulty | *Replace after making sure that none of above parts is faulty.* |

## Oil Pressure Warning Light Symptom Diagnosis

S5JB0A9304027

| Condition | Possible cause | Correction / Reference Item |
|---|---|---|
| ***Oil pressure warning light does not light up when ignition switch is turned to ON position at engine off*** | Circuit fuse blown | *Replace fuse and check for short circuit.* |
| | Data (information) can not be received by CAN communication | *Check BCM for DTC referring to "DTC Check: in Section 10B".* |
| | Oil pressure switch faulty | *Check oil pressure switch referring to "Oil Pressure Switch Inspection: ".* |
| | Wiring or ground faulty | *Repair circuit.* |
| | Combination meter faulty | *Replace combination meter.* |
| | BCM faulty | *Replace after making sure that none of above parts is faulty.* |
| ***Oil pressure warning light stays ON*** | Data (information) can not be received by CAN communication | *Check BCM for DTC referring to "DTC Check: in Section 10B".* |
| | Oil pressure switch faulty | *Check oil pressure switch referring to "Oil Pressure Switch Inspection: ".* |
| | Wiring or ground faulty | *Repair circuit.* |
| | Combination meter faulty | *Replace combination meter.* |
| | BCM faulty | *Replace after making sure that none of above parts is faulty.* |

www.cargeek.ir

## Brake and Parking Brake Warning Light Symptom Diagnosis

S5JB0A9304028

| Condition | Possible cause | Correction / Reference Item |
|---|---|---|
| ***Brake warning light does not light up when brake fluid level is low or parking brake is pulled up or for 5 seconds after turning ON ignition switch (with ABS vehicle only)*** | Circuit fuse blown | *Replace fuse and check for short circuit.* |
| | Data (information) can not be received by CAN communication | *Check BCM for DTC referring to "DTC Check: in Section 10B".* |
| | Brake fluid level switch faulty | *Check brake fluid level switch referring to "Brake Fluid Level Switch Inspection: ".* |
| | Parking brake switch faulty | *Check parking brake switch referring to "Parking Brake Switch Inspection: ".* |
| | ABS system faulty | *Refer to "ABS Check: in Section 4E".* |
| | Wiring or ground faulty | *Repair circuit.* |
| | Combination meter faulty | *Replace combination meter.* |
| | BCM faulty | *Replace after making sure that none of above parts is faulty.* |
| ***Brake warning light stays ON*** | Data (information) can not be received by CAN communication | *Check BCM for DTC referring to "DTC Check: in Section 10B".* |
| | Brake fluid level switch faulty | *Check brake fluid level switch referring to "Brake Fluid Level Switch Inspection: ".* |
| | Parking brake switch faulty | *Check parking brake switch referring to "Parking Brake Switch Inspection: ".* |
| | EBD system faulty | *Refer to "EBD Warning Lamp (Brake Warning Lamp) Check: in Section 4E".* |
| | Wiring or ground faulty | *Repair circuit.* |
| | Combination meter faulty | *Replace combination meter.* |
| | BCM faulty | *Replace after making sure that none of above parts is faulty.* |

## Seat Belt Reminder Light Symptom Diagnosis (If Equipped)

S5JB0A9304029

**NOTE**

**Seat belt reminder can be canceled by scan tool or specified procedure. If neither warning buzzer nor seat belt reminder light operates, first confirm that seat belt reminder is not selected referring to "Scan Tool Data: in Section 10B". For further details, refer to "Seat Belt Construction: in Section 8A".**

| Condition | Possible cause | Correction / Reference Item |
|---|---|---|
| ***Seat belt reminder light does not light up*** | Circuit fuse blown | *Replace fuse and check for short circuit.* |
| | Data (information) can not be received by CAN communication | *Check BCM for DTC referring to "DTC Check: in Section 10B".* |
| | Seat belt switch faulty | *Check seat belt switch referring to "Front Seat Belt Inspection: in Section 8A".* |
| | Wiring or ground faulty | *Repair circuit.* |
| | Combination meter faulty | *Replace combination meter.* |
| | BCM faulty | *Replace after making sure that none of above parts is faulty.* |
| ***Seat belt reminder light stays ON*** | Data (information) can not be received by CAN communication | *Check BCM for DTC referring to "DTC Check: in Section 10B".* |
| | Seat belt switch faulty | *Check seat belt switch referring to "Front Seat Belt Inspection: in Section 8A".* |
| | Wiring or ground faulty | *Repair circuit.* |
| | Combination meter faulty | *Replace combination meter.* |
| | BCM faulty | *Replace after making sure that none of above parts is faulty.* |

www.cargeek.ir

 www.CarGeek.ir

## Illumination Indicator Symptom Diagnosis

S5JB0A9304031

| Condition | Possible cause | Correction / Reference Item |
|---|---|---|
| ***Illumination indicator does not light up*** | Circuit fuse blown | *Replace fuse and check for short circuit.* |
| | Data (information) can not be received by CAN communication | *Check BCM for DTC referring to "DTC Check: in Section 10B".* |
| | Lighting switch faulty | *Check lighting switch referring to "Headlight Switch (in Lighting Switch) Inspection: in Section 9B".* |
| | Wiring or ground faulty | *Repair circuit.* |
| | Combination meter faulty | *Replace combination meter.* |
| | BCM faulty | *Replace after making sure that none of above parts is faulty.* |
| ***Illumination indicator stays ON*** | Lighting switch faulty | *Check lighting switch referring to "Headlight Switch (in Lighting Switch) Inspection: in Section 9B".* |
| | Data (information) can not be received by CAN communication | *Check BCM for DTC referring to "DTC Check: in Section 10B".* |
| | Wiring or ground faulty | *Repair circuit.* |
| | Combination meter faulty | *Replace combination meter.* |
| | BCM faulty | *Replace after making sure that none of above parts is faulty.* |

## Headlight Auto Leveling Indicator Symptom Diagnosis (If Equipped)

S5JB0A9304032

| Condition | Possible cause | Correction / Reference Item |
|---|---|---|
| ***Headlight auto leveling indicator does not light up*** | Circuit fuse blown | *Replace fuse and check for short circuit.* |
| | Headlight auto leveling control module faulty | *Check headlight auto leveling control module referring to "Inspection of Headlight Leveling Control Module and Its Circuit (Vehicle Equipped With Auto Leveling Headlight System): in Section 9B".* |
| | Wiring or ground faulty | *Repair circuit.* |
| | Combination meter faulty | *Replace combination meter.* |
| ***Headlight auto leveling indicator stays ON*** | Headlight auto leveling control module faulty | *Check headlight auto leveling control module referring to "Inspection of Headlight Leveling Control Module and Its Circuit (Vehicle Equipped With Auto Leveling Headlight System): in Section 9B".* |
| | Wiring or ground faulty | *Repair circuit.* |
| | Combination meter faulty | *Replace combination meter.* |

## A/T Power Mode Indicator Symptom Diagnosis (A/T Model Only)

S5JB0A9304033

| Condition | Possible cause | Correction / Reference Item |
|---|---|---|
| ***A/T power mode indicator does not light up*** | Circuit fuse blown | *Replace fuse and check for short circuit.* |
| | Data (information) can not be received by CAN communication | *Check BCM for DTC referring to "DTC Check: in Section 10B".* |
| | A/T power mode switch faulty | *Check mode select switch referring to "Mode Select Switch Inspection: in Section 5A".* |
| | Wiring or ground faulty | *Repair circuit.* |
| | Combination meter faulty | *Replace combination meter.* |
| | BCM faulty | *Replace after making sure that none of above parts is faulty.* |

www.cargeek.ir

| Condition | Possible cause | Correction / Reference Item |
|---|---|---|
| ***A/T power mode indicator stays ON*** | Data (information) can not be received by CAN communication | *Check BCM for DTC referring to "DTC Check: in Section 10B".* |
| | A/T power mode switch faulty | *Check mode select switch referring to "Mode Select Switch Inspection: in Section 5A".* |
| | Wiring or ground faulty | *Repair circuit.* |
| | Combination meter faulty | *Replace combination meter.* |
| | BCM faulty | *Replace after making sure that none of above parts is faulty.* |

## A/T Shift Position Indicator (A/T Model Only) Symptom Diagnosis

S5JB0A9304034

| Condition | Possible cause | Correction / Reference Item |
|---|---|---|
| ***All A/T shift position indicator does not light up*** | Circuit fuse blown | *Replace fuse and check for short circuit.* |
| | Data (information) can not be received by CAN communication | *Check TCM for DTC referring to "DTC Check: in Section 5A".* |
| | Transmission range sensor (shift switch) faulty | *Check transmission range sensor referring to "Transmission Range Sensor Inspection and Adjustment: in Section 5A".* |
| | Wiring or ground faulty | *Repair circuit.* |
| | Combination meter faulty | *Replace combination meter.* |
| | TCM faulty | *Replace after making sure that none of above parts is faulty.* |

## Charge Warning Light Symptom Diagnosis

S5JB0A9304035

| Condition | Possible cause | Correction / Reference Item |
|---|---|---|
| ***Charge warning light does not come ON*** | Circuit fuse blown | *Replace fuse and check for short circuit.* |
| | Data (information) can not be received by CAN communication | *Check BCM for DTC referring to "DTC Check: in Section 10B".* |
| | Wiring or ground faulty | *Repair circuit.* |
| | Combination meter faulty | *Replace combination meter.* |
| | BCM faulty | *Replace after making sure that none of above parts is faulty.* |
| ***Charge warning light stay ON*** | Charging system faulty | *Check charging system.* |
| | Data (information) can not be received by CAN communication | *Check BCM for DTC referring to "DTC Check: in Section 10B".* |
| | Wiring or ground faulty | *Repair circuit.* |
| | Combination meter faulty | *Replace combination meter.* |
| | BCM faulty | *Replace after making sure that none of above parts is faulty.* |

## Main Beam (High Beam) Indicator Symptom Diagnosis

S5JB0A9304036

| Condition | Possible cause | Correction / Reference Item |
|---|---|---|
| ***Main beam (high beam) indicator does not come ON*** | Circuit fuse blown | *Replace fuse and check for short circuit.* |
| | Data (information) can not be received by CAN communication | *Check BCM for DTC referring to "DTC Check: in Section 10B".* |
| | Relay faulty | *Replace relay* |
| | Combination switch faulty | *Check combination switch referring to "Headlight Switch (in Lighting Switch) Inspection: in Section 9B".* |
| | Wiring or ground faulty | *Repair circuit.* |
| | Combination meter faulty | *Replace combination meter.* |
| | BCM faulty | *Replace after making sure that none of above parts is faulty.* |

www.cargeek.ir

 www.CarGeek.ir

| Condition | Possible cause | Correction / Reference Item |
|---|---|---|
| ***Main beam (high beam) indicator stay ON*** | Data (information) can not be received by CAN communication | *Check BCM for DTC referring to "DTC Check: in Section 10B".* |
| | Combination switch faulty | *Check combination switch referring to "Headlight Switch (in Lighting Switch) Inspection: in Section 9B".* |
| | Wiring or ground faulty | *Repair circuit.* |
| | Combination meter faulty | *Replace combination meter.* |
| | BCM faulty | *Replace after making sure that none of above parts is faulty.* |

## Warning Buzzer Circuit Symptom Diagnosis

S5JB0A9304012

**NOTE**

- **Use of SUZUKI scan tool makes it easy to check whether a faulty condition is on the input side or output side of BCM. For checking procedure, refer to "Diagnosis Using Output Test Function of SUZUKI Scan Tool" under "Scan Tool Data: in Section 10B".**
- **Check each part in the order from the top of the following list.**

| Condition | Possible cause | Correction / Reference Item |
|---|---|---|
| ***Warning buzzer shows no sounding*** | Circuit fuse blown | *Replace fuse and check for short circuit.* |
| | Driver side door switch faulty | *Check driver side door switch referring to "Door Switch (Front / Rear / Rear End Door) Inspection: ".* |
| | Lighting switch faulty | *Check lighting switch referring to "Headlight Switch (in Lighting Switch) Inspection: in Section 9B".* |
| | Key remainder switch faulty | *Check key remainder switch referring to "Ignition Switch Inspection: ".* |
| | Wiring or ground faulty | *Repair circuit.* |
| | BCM faulty | *Replace after making sure that none of above parts is faulty.* |

## Cigarette Lighter Symptom Diagnosis (If Equipped)

S5JB0A9304013

| Condition | Possible cause | Correction / Reference Item |
|---|---|---|
| ***Cigarette lighter shows no operation*** | Circuit fuse blown | *Replace fuse and check for short circuit.* |
| | ACC relay faulty | *Replace relay* |
| | Cigarette lighter faulty | *Check cigarette lighter.* |
| | Ignition switch faulty | *Check ignition switch referring to "Ignition Switch Inspection: ".* |
| | Wiring or grounding faulty | *Repair circuit.* |

## Horn Symptom Diagnosis

S5JB0A9304014

| Condition | Possible cause | Correction / Reference Item |
|---|---|---|
| ***Horn does not operate*** | Circuit fuse blown | *Replace fuse and check for short circuit.* |
| | Horn switch faulty | *Check horn switch.* |
| | Horn relay faulty | *Check horn relay.* |
| | Wiring or grounding faulty | *Repair circuit.* |
| | Horn faulty | *Replace horn.* |

www.cargeek.ir

## Information Display Symptom Diagnosis (If Equipped)

S5JB0A9304015

**NOTE**

**This thermometer indicates the ambient temperature in back of front bumper member. Under any one of the following listed conditions, however, even when the ambient temperature goes up, the thermometer display does not rise so as to correct the rise of the ambient temperature caused by the radiant heat of the engine. When the ambient temperature drops, the thermometer reading follows the change in the temperature.**
**Be sure to bear this in mind when diagnosing trouble.**

- **The vehicle speed is 30 km/h (18 mph) or lower.**
- **VSS signal is faulty.**
- **The ignition switch is turned on again within 2 hours.**

| Condition | Possible cause | Correction / Reference Item |
|---|---|---|
| ***No displaying of information display*** | Circuit fuse Blown | *Replace fuse and check for short circuit.* |
| | Wiring and/or grounding faulty | *Repair as necessary.* |
| | Information display unit faulty | *Replace unit.* |
| ***Incorrect thermometer display*** | Outside air temperature sensor faulty | *Check outside air temperature sensor referring to “Outside Air Temperature Sensor Inspection (If Equipped): ”.* |
| | Vehicle speed signal faulty | *Check ECM for DTC referring to “DTC Check: in Section 1A”.* |
| | Wiring and/or grounding faulty | *Repair as necessary.* |
| | BCM faulty | *Replace after making sure that none of above parts is faulty.* |
| ***Display does not change at –30 °C*** | Outside air temperature is –30 °C (–22 °F) or less | — |
| | Outside air temperature sensor faulty | *Check outside air temperature sensor referring to “Outside Air Temperature Sensor Inspection (If Equipped): ”.* |
| | Outside air temperature sensor wiring circuit open circuit and/or short to power circuit | *Repair as necessary.* |
| | BCM faulty | *Replace after making sure that none of above parts is faulty.* |
| ***Display does not change at 50 °C*** | Outside air temperature is 50 °C (122 °F) or more | — |
| | Outside air temperature sensor faulty | *Check outside air temperature sensor referring to “Outside Air Temperature Sensor Inspection (If Equipped): ”.* |
| | Outside air temperature sensor wiring circuit short to ground circuit | *Repair as necessary.* |
| | BCM faulty | *Replace after making sure that none of above parts is faulty.* |

## Clock Symptom Diagnosis (If Equipped)

S5JB0A9304020

| Condition | Possible cause | Correction / Reference Item |
|---|---|---|
| ***No displaying of clock*** | Circuit fuse Blown | *Replace fuse and check for short circuit.* |
| | Wiring and/or grounding faulty | *Repair as necessary.* |
| | Clock unit faulty | *Replace unit.* |

www.cargeek.ir

 www.CarGeek.ir

## Audio System Symptom Diagnosis (If Equipped)

S5JB0A9304016

### Radio

**NOTE**

**Electronic part / system with undiagnosed problem may cause electromagnetic interference. Electromagnetic interference condition may have poor radio reception. To test for presence of electromagnetic interference in part / system, perform the following procedures.**

1. **Turn ignition switch to OFF.**
2. **Systematically disconnect the electronic part / system connector(s) one at a time.**
3. **Turn ignition switch to ON.**
4. **Check any improvement in radio reception.**

| Condition | Possible cause | Correction / Reference Item |
|---|---|---|
| ***Poor radio reception*** | Out of service area (Poor location) | — |
| | Antenna faulty | *Replace antenna.* |
| | Antenna amplifier faulty | *Replace antenna amplifier.* |
| | Electrical part / system faulty | *Repair or replace electrical part / system referring to after-mentioned NOTE.* |
| | Wiring and/or grounding faulty | *Repair as necessary.* |
| | Radio assembly faulty | *Replace radio assembly.* |
| ***Radio does not operate and speaker does not sound*** | Circuit fuse(s) blown | *Replace fuse(s) and check for short circuit.* |
| | Wiring and/or grounding faulty | *Repair as necessary.* |
| | Radio assembly faulty | *Replace radio assembly.* |
| ***Radio does not operate, but speaker sound*** | Wiring and/or grounding faulty | *Repair as necessary.* |
| | Radio assembly faulty | *Replace radio assembly.* |
| ***Radio is operative, but all speakers does not sound*** | Wiring and/or grounding faulty | *Repair as necessary.* |
| | Radio assembly faulty | *Replace radio assembly.* |
| ***Individual speaker is noisy or inoperative*** | Wiring and/or grounding faulty | *Repair as necessary.* |
| | Speaker faulty | *Replace speaker.* |
| | Radio assembly faulty | *Replace radio assembly.* |
| ***Sound quality is poor*** | Out of service area (Poor location) | — |
| | Speaker installed incorrectly | *Install correctly.* |
| | Wiring and/or grounding faulty | *Repair as necessary.* |
| | Speaker faulty | *Replace speaker.* |
| | Radio assembly faulty | *Replace radio assembly.* |

### CD Player

| Condition | Possible cause | Correction / Reference Item |
|---|---|---|
| ***CD-ROM does not insert*** | Another CD-ROM already inserted | *Eject CD-ROM.* |
| | Circuit fuse blown | *Replace fuse and check for short circuit.* |
| | Wiring and/or grounding faulty | *Repair as necessary.* |
| | Extraneous material come to be mixed CD player | *Clear extraneous material from CD player or replace radio assembly.* |
| | Radio assembly faulty | *Replace radio assembly.* |
| ***CD-ROM does not eject*** | Circuit fuse blown | *Replace fuse and check for short circuit.* |
| | Wiring and/or grounding faulty | *Repair as necessary.* |
| | Extraneous material come to be mixed in CD player | *Clear extraneous material from CD player or replace radio assembly.* |
| | Radio assembly faulty | *Replace radio assembly.* |
| ***CD player does not load CD-ROM*** | CD-ROM faulty | — |
| | CD-ROM inserted with incorrect side up | *Insert correctly.* |
| | Temperature in cabin is too hot | — |
| | Water droplets form on internal lens | *Dry about 1 hour with power on.* |
| | Radio assembly faulty | *Replace radio assembly.* |

www.cargeek.ir

| Condition | Possible cause | Correction / Reference Item |
|---|---|---|
| ***Sound skips or is noisy*** | CD-ROM faulty | — |
| | Driving vibration | — |
| | Water droplets form on internal lens | *Dry about 1 hour with power on.* |
| | Radio assembly installed incorrectly | *Install correctly.* |
| | Radio assembly faulty | *Replace radio assembly.* |
| ***CD player is operative, but all speakers does not sound*** | Wiring and/or grounding faulty | *Repair as necessary.* |
| | Radio assembly faulty | *Replace radio assembly.* |
| ***Individual speaker is noisy or inoperative*** | Wiring and/or grounding faulty | *Repair as necessary.* |
| | Speaker faulty | *Replace speaker.* |
| | Radio assembly faulty | *Replace radio assembly.* |
| ***Sound quality or volume is poor*** | CD-ROM faulty | — |
| | Wiring and/or grounding faulty | *Repair as necessary.* |
| | Speaker installed incorrectly | *Install correctly.* |
| | Speaker faulty | *Replace speaker.* |

### Remote Audio Control Switch Symptom Diagnosis (If Equipped)

S5JB0A9304017

| Condition | Possible cause | Correction / Reference Item |
|---|---|---|
| ***Audio system is operative, but remote control switch does not control audio system*** | Remote audio control switch faulty | *Check remote audio control switch referring to "Remote Audio Control Switch Inspection: ".* |
| | Contact coil faulty | *Replace contact coil.* |
| | Wiring and/or grounding faulty | *Repair as necessary.* |
| | Radio assembly faulty | *Replace radio assembly.* |

### Navigation Symptom Diagnosis (If Equipped)

S5JB0A9304021

| Condition | Possible cause | Correction / Reference Item |
|---|---|---|
| ***No displaying of navigation*** | Circuit fuse Blown | *Replace fuse and check for short circuit.* |
| | Wiring and/or grounding faulty | *Repair circuit.* |
| | Navigation unit faulty | *Replace unit.* |

## Repair Instructions

### Ignition Switch Removal and Installation

S5JB0A9306001

**Removal**

1) Disconnect negative cable at battery.
2) Confirm that ignition key is removed.
3) Remove steering column hole cover (1).
4) Turn steering wheel to remove steering column cover screws (3) and then remove steering column covers (2).

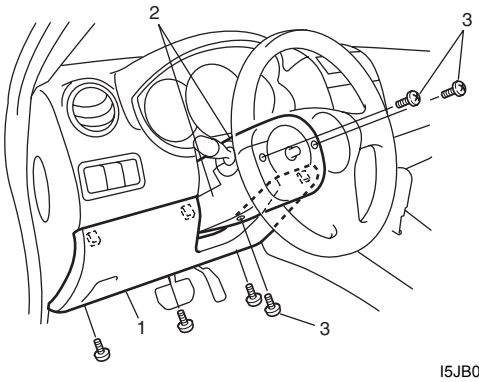


I5JB0A940020-01

5) Disconnect couplers (1) from ignition switch (2).
6) Remove ignition switch (2) from key cylinder (3).

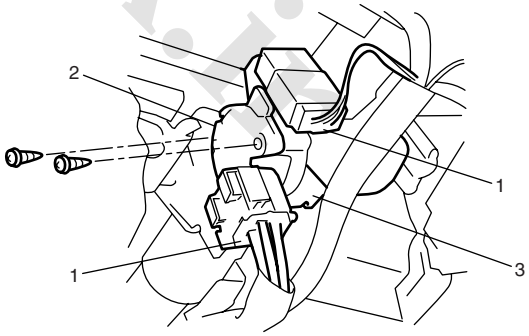


I4RS0A930008-01

**Installation**

Reverse removal procedure.

 www.CarGeek.ir

## Ignition Switch Inspection

S5JB0A9306002

- Check for continuity between terminals at each switch position. If check result is not as specified, replace switch.

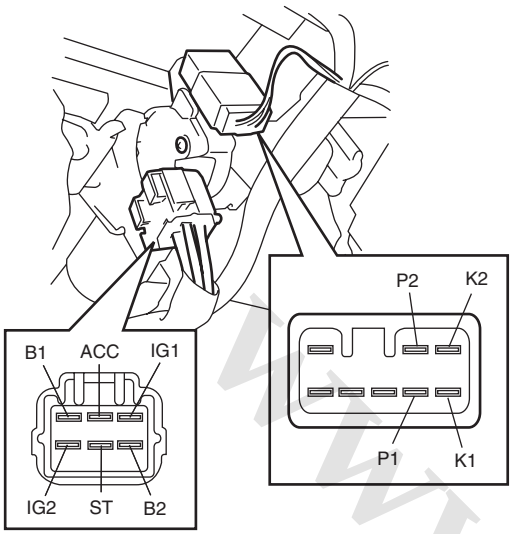


| Key \ Position \ Terminal | | B1 | B2 | ACC | IG1 | IG2 | ST | K1 | K2 |
|---|---|---|---|---|---|---|---|---|---|
| OUT | LOCK | ○ | | | | | | | |
| IN | LOCK | ○ | | | | | | | |
| IN | ACC | ○ | | ○ | | | | | |
| IN | ON | ○ | | ○ | ○ | | | ○ | ○ |
| IN | ON | | ○ | | | ○ | | | |
| IN | START | ○ | | ○ | | | | | |
| IN | START | | ○ | | | | ○ | | |

| Ignition knob switch (with keyless start system only) \ Terminal | P1 | P2 |
|---|---|---|
| OFF (ignition knob switch released) | | |
| ON (ignition knob switch pushsed) | ○ | ○ |

I5JB0A930004-01

## Combination Meter Removal and Installation

S5JB0A9306003

### Removal

1) Disconnect negative (–) cable at battery.
2) Remove screws (1) fastening combination meter cluster panel.
3) Remove combination meter cluster panel (2) pulling it in arrow direction shown in figure.

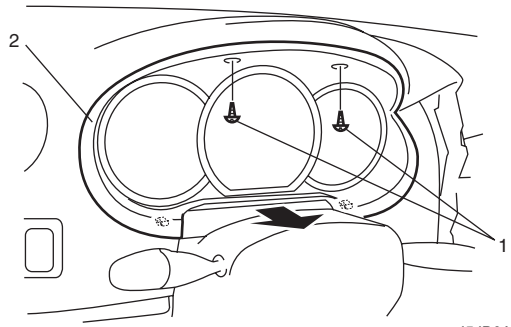


I5JB0A930005-02

4) Remove screws (1) fastening combination meter.
5) Remove combination meter (2) pulling it arrow direction as shown.

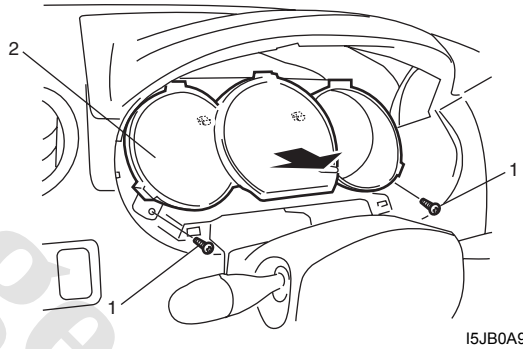


I5JB0A930006-02

### Installation

Reverse removal procedure.

## Fuel Level Sensor Removal and Installation

S5JB0A9306004

### Removal

Remove fuel pump assembly referring to “Fuel Pump Assembly Removal and Installation: in Section 1G”.

### Installation

Install fuel pump assembly referring to “Fuel Pump Assembly Removal and Installation: in Section 1G”.

www.cargeek.ir

## Fuel Level Sensor Inspection

S5JB0A9306005

- Check that resistance between terminals “a” and “b” of fuel level sensor changes with change of float position.
- Check resistance between terminals “a” and “b” at each float position in the following.
  If the measured value is out of specification, replace fuel pump and/or sub fuel level sensor.

**Main fuel level sensor [A] specifications**

| | Float position | | Resistance (Ω) |
|---|---|---|---|
| M16 engine model | Full Upper “C” | 193.7 mm (7.626 in.) | 19.0 – 21.0 |
| | Full Lower “D” | 42.2 mm (1.661 in.) | 111.9 – 115.3 |
| J20 engine model | Full Upper “C” | 196.8 mm (7.748 in.) | 19.0 – 21.0 |
| | Full Lower “D” | 34.9 mm (1.374 in.) | 129.0 – 132.4 |

**Sub fuel level sensor [B] specifications**

| | Float position | | Resistance (Ω) |
|---|---|---|---|
| M16 engine model | Full Upper “C” | 48.1 mm (1.894 in.) | 19.0 – 21.0 |
| | Full Lower “D” | 252.8 mm (9.953 in.) | 164.7 – 168.1 |
| J20 engine model | Full Upper “C” | 64.1 mm (2.524 in.) | 19.0 – 21.0 |
| | Full Lower “D” | 244.8 mm (9.638 in.) | 147.6 – 151.0 |

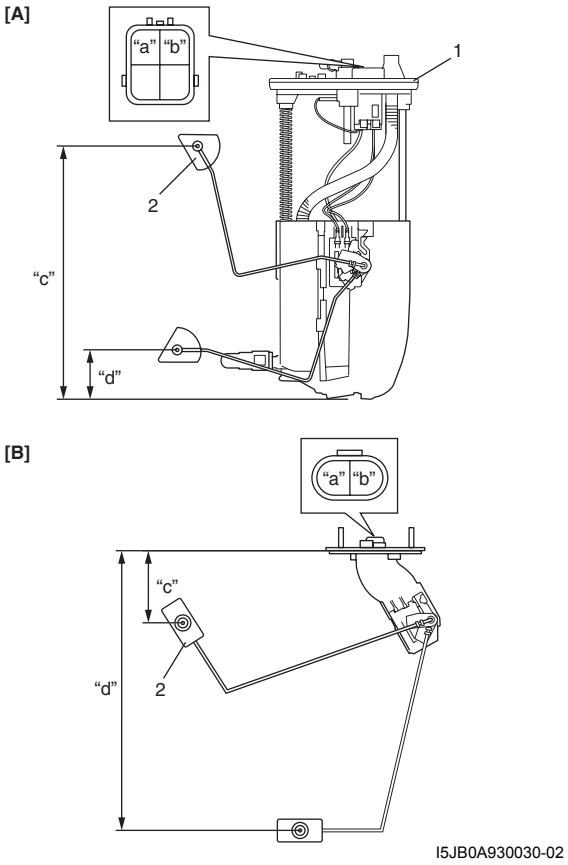


I5JB0A930030-02

| | |
|---|---|
| 1. | Fuel pump |
| 2. | Float |

## Oil Pressure Switch Removal and Installation

S5JB0A9306006

For removal and installation, refer to “Oil Pressure Check: For M16A Engine with VVT in Section 1E” or “Oil Pressure Check: For J20 Engine in Section 1E”.

www.cargeek.ir

 www.CarGeek.ir

## Oil Pressure Switch Inspection

S5JB0A9306007

1) Disconnect oil pressure switch (1) lead wire.
2) Check for continuity between oil pressure switch terminal (2) and cylinder block (3) as shown.
   If check result is not as specified, replace oil pressure switch (1).

**Oil pressure sensor specification**
**During engine running: No continuity**
**At engine stop: Continuity**

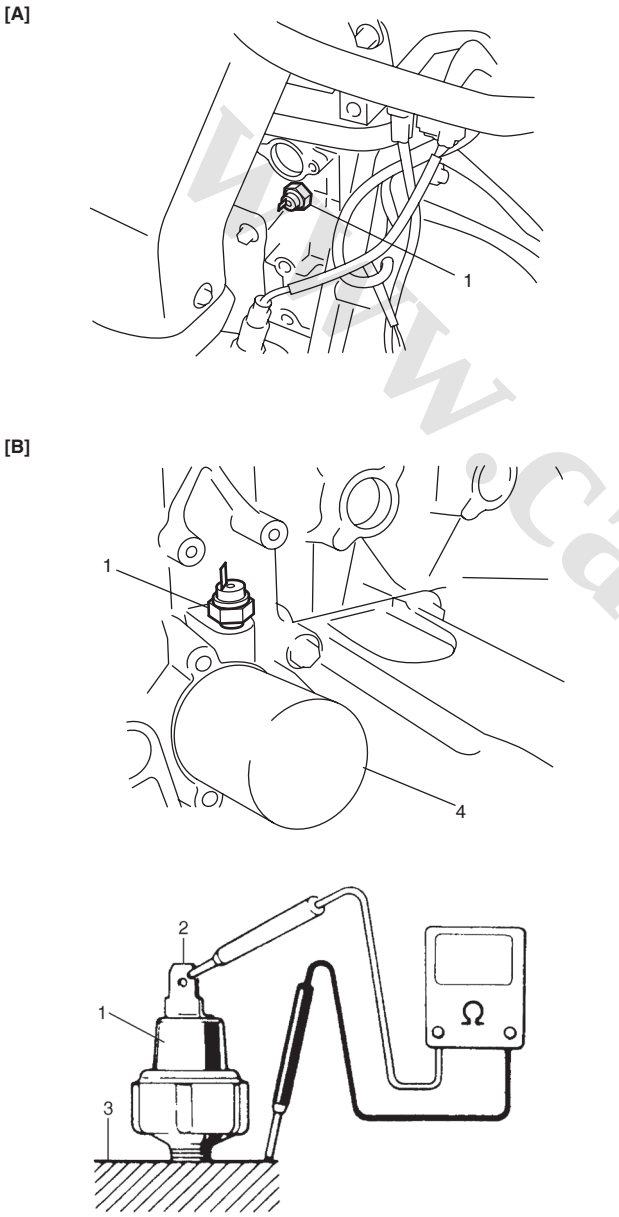


I5JB0A930007-02

| | |
|---|---|
| [A]: J20 engine model | 4. Engine oil filter |
| [B]: M16 engine model | |

## Engine Coolant Temperature (ECT) Sensor Inspection

S5JB0A9306010

Check engine coolant temperature sensor for resistance, refer to “Engine Coolant Temperature (ECT) Sensor Inspection: in Section 1C”.

## Brake Fluid Level Switch Inspection

S5JB0A9306011

Check for continuity between terminals of brake fluid level switch coupler (1). If found defective, replace switch.

**Brake fluid level switch specification**
**OFF position (float up): No continuity**
**ON position (float down): Continuity**

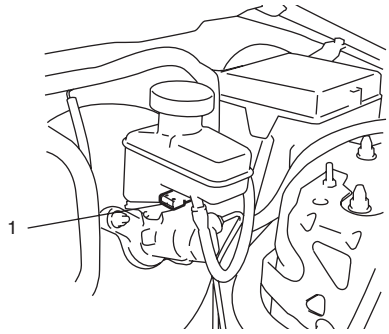


I5JB0A930008-01

## Parking Brake Switch Inspection

S5JB0A9306012

Check for continuity between parking brake switch terminal and body ground as shown in figure. If found defective, replace switch.

**Parking brake switch specification**
**OFF position (parking brake released): No continuity**
**ON position (parking brake lever pulled up): Continuity**

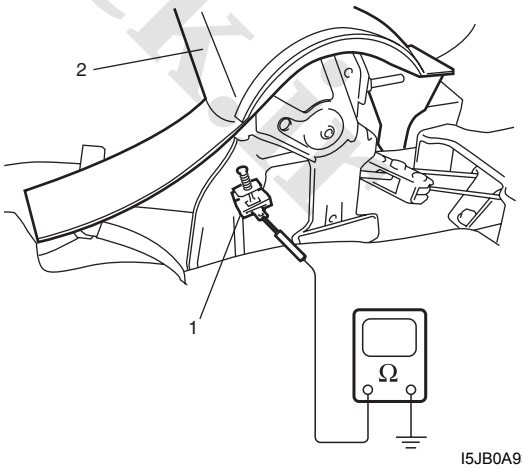


I5JB0A930009-01

| |
|---|
| 1. Parking brake switch |
| 2. Parking brake lever |

www.cargeek.ir

## Door Switch (Front / Rear / Rear End Door) Inspection

S5JB0A9306013

Remove door switch from body and check switch for continuity. If found defective, replace switch.

**Door switch (front / rear / rear end door) specification**

**OFF position (Door closed): No continuity**
**ON position (Door open): Continuity**

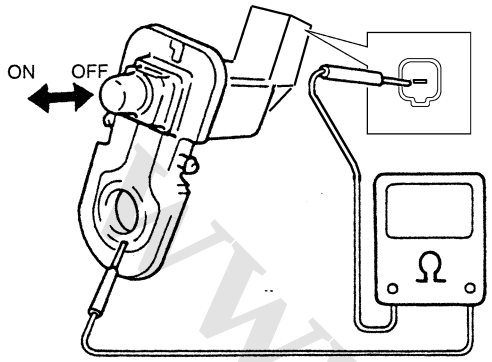


I3RH0A930004-01

## Outside Air Temperature Sensor Removal and Installation (If Equipped)

S5JB0A9306015

### Removal

1) Disconnect negative (–) cable at battery.
2) Remove front bumper referring to “Front Bumper Components: in Section 9K”.
3) Disconnect connector (1) from outside air temperature sensor (2).
4) Remove outside air temperature sensor (2) from front bumper (3).

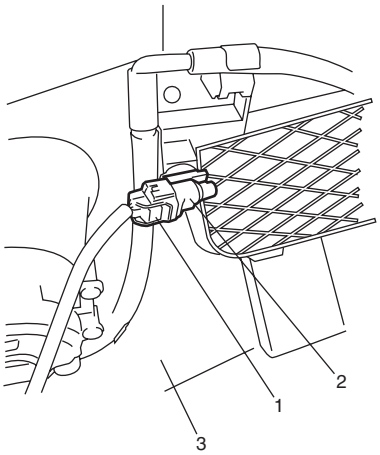


I5JB0A930010-01

### Installation

Reverse removal procedure for installation.

## Outside Air Temperature Sensor Inspection (If Equipped)

S5JB0A9306016

Measure resistance of outside air temperature sensor using an ohmmeter.
If resistance is out of specification, replace outside air temperature sensor.

**Outside air temperature sensor resistance**

**1.62 kΩ – 1.78 kΩ at 25 °C (77 °F)**

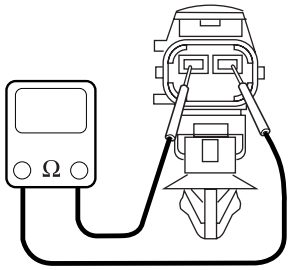


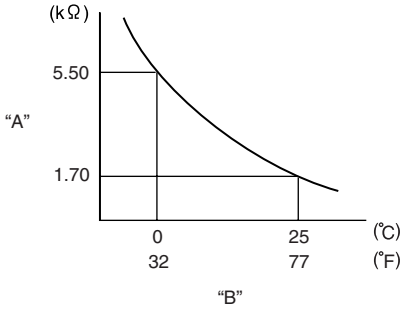


I4RS0A930017-01

| | |
|---|---|
| “A”: | Resistance |
| “B”: | Temperature |

## Instrument Panel Removal and Installation

S5JB0A9306017

**⚠ WARNING**

**Refer to “Air Bag Warning: in Section 00” before starting service work.**

**⚠ CAUTION**

**Position heat control mode into FOOT MODE before removing instrument panel to avoid the damage to air flow control door.**

www.cargeek.ir

 www.CarGeek.ir

**Removal**

1) Disconnect negative cable at battery.
2) Remove driver side instrument panel under cover (1) and passenger side instrument panel under cover (2).

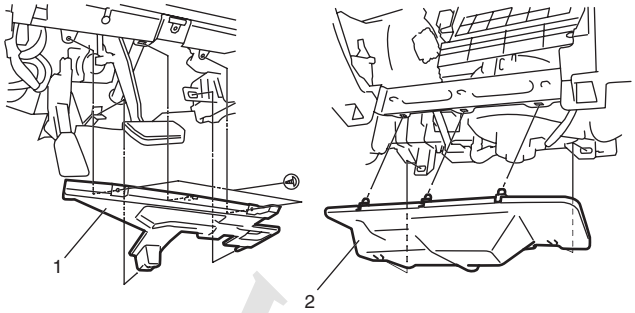


I5JB0A930011-01

3) Disable air bag system referring to “Disabling Air Bag System: in Section 8B”.
4) Remove steering column hole cover (1).
5) Turn steering wheel to remove steering column cover screws (3).
6) Remove steering column covers (2).

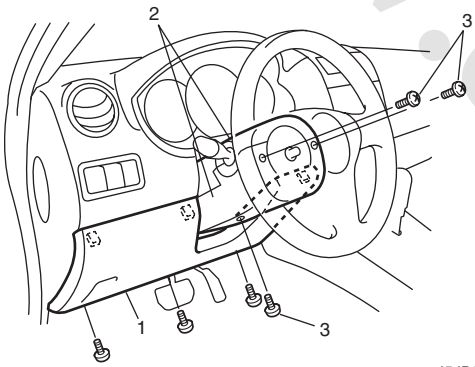


I5JB0A940020-01

7) Remove glove box (1).
8) Remove hood latch release lever (2).

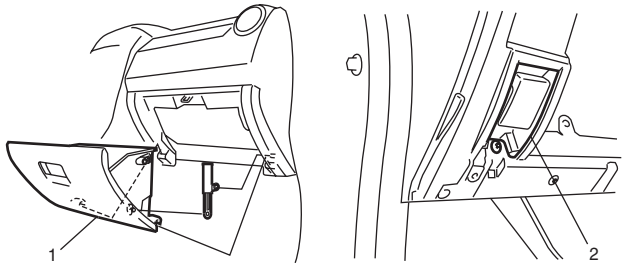


I5JB0A930012-01

9) Remove console box referring to “Console Box Components: in Section 9H”.
10) Remove front pillar trims (1) front side sill scuffs (2) and dash side trims (3).

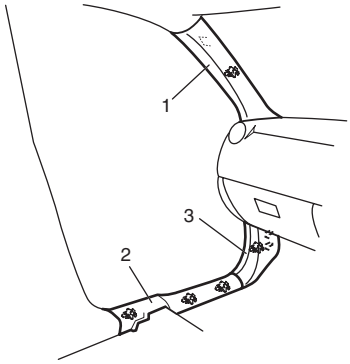


I5JB0A930013-01

11) Disconnect instrument panel harness connectors, inside air temperature sensor duct and antenna cable instrument panel removal.
12) Remove steering column mounting referring to “Steering Column Assembly Removal and Installation: in Section 6B”.
13) Remove instrument panel ground wire.
14) Remove instrument panel mounting bolts (1).
15) Remove instrument panel (2) with steering support member and instrument panel harness.

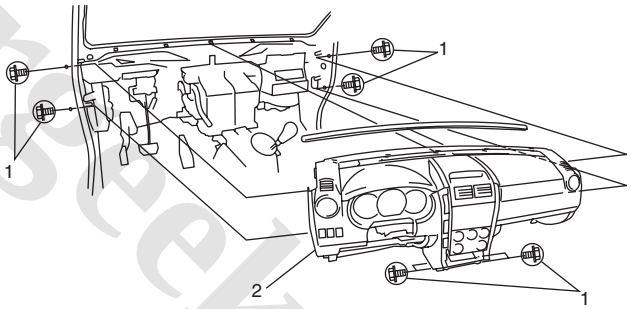


I5JB0A930014-01

www.cargeek.ir

**Installation**
Reverse removal procedure noting the following.

- When installing each part, be careful not to catch any cable or wiring harness.
- Tighten instrument panel mounting bolts to specified torque

**Tightening torque**
**Instrument panel mounting bolt (a): 23 N·m (2.3 kgf-m, 17.0 lb-ft)**

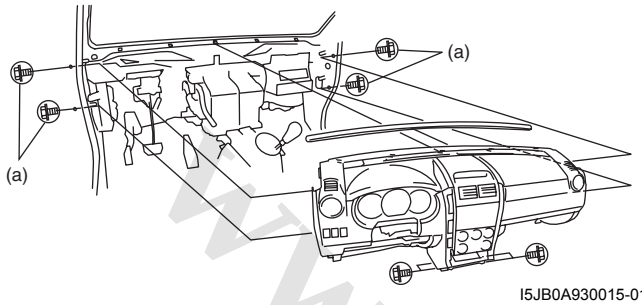

I5JB0A930015-01

- Tighten steering column mounting nuts referring to “Steering Column Assembly Removal and Installation: in Section 6B”.
- Enable air bag system referring to “Enabling Air Bag System: in Section 8B”.

## Information Display (Clock) Removal and Installation

S5JB0A9306018

**Removal**

1) Remove audio unit referring to “Audio Unit Removal and Installation: ”.
2) Remove center ventilation louver (1) from instrument panel (2) pulling it arrow direction as shown.
3) Disconnect hazard switch connector.

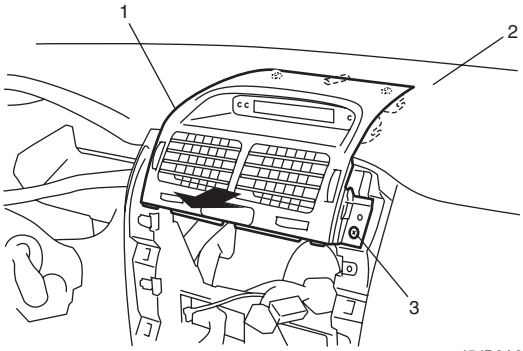

I5JB0A930016-01

| |
|---|
| 3. screw |

4) Remove information display (clock) (1) from instrument panel (2) pulling it in arrow direction shown in figure.
5) Disconnect information display (clock) coupler.

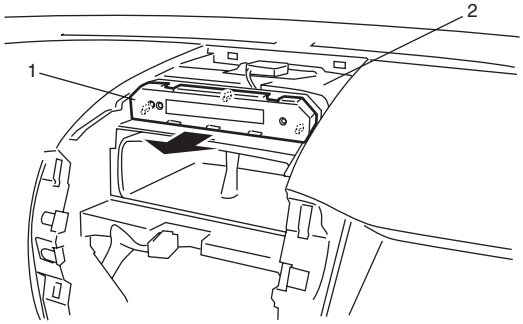

I5JB0A930017-01

**Installation**
Reverse removal procedure.

## Audio Unit Removal and Installation

S5JB0A9306019

**Removal**

1) Disconnect negative (–) cable at battery.
2) Remove instrument panel center garnish trims (1).

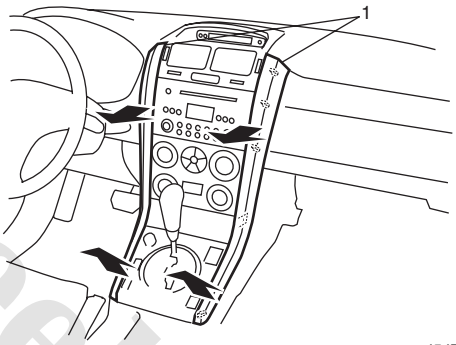

I5JB0A930018-03

3) Remove 6 mounting screws (1).
4) Disconnect electrical connectors from audio unit and HVAC control module.
5) Remove audio unit (2) with HVAC control module from instrument panel.

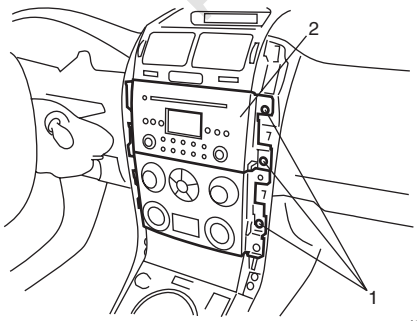

I5JB0A930019-04

6) Remove audio unit from HVAC control module.

**Installation**
Reverse removal procedure.

www.cargeek.ir

 www.CarGeek.ir

## Front Speaker Removal and Installation

S5JB0A9306020

### Removal

1) Remove door trim referring to Step 1) to 3) of “Front Door Glass Removal and Installation: in Section 9E”.
2) Remove 3 front speaker mounting screws (1).
3) Remove front speaker (2) from front door (3).
4) Disconnect front speaker coupler from front speaker (2).

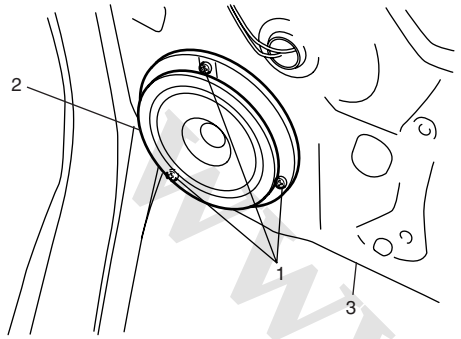


I4RS0A930027-01

### Installation

Reverse removal procedure.

## Rear Speaker Removal and Installation (5 Door Model)

S5JB0A9306021

### Removal

1) Remove door trim referring to Step 1) to 3) of “Rear Door Glass Removal and Installation: in Section 9E”.
2) Remove 3 rear speaker mounting screws (1).
3) Remove rear speaker (2) from rear door (3).
4) Disconnect rear speaker coupler from rear speaker (2).

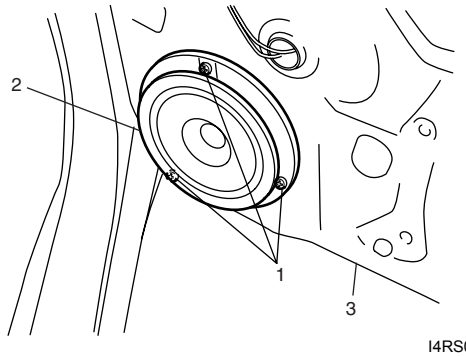


I4RS0A930027-01

### Installation

Reverse removal procedure.

## Rear Speaker Removal and Installation (3 Door Model)

S5JB0A9306027

### Removal

1) Remove right and left lower anchor bolts (2) from body panel.
2) Remove quarter lower trim (1).

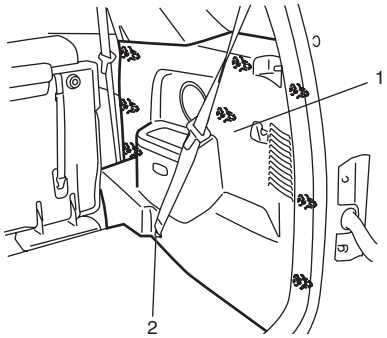


I5JB0A930020-02

3) Remove 3 rear speaker mounting screws (1) and rear speaker (2) from quarter panel.
4) Disconnect rear speaker coupler from rear speaker (2).

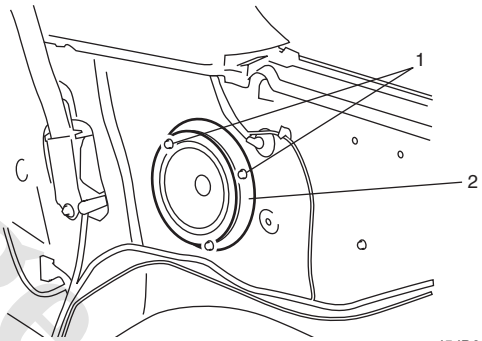


I5JB0A930021-02

### Installation

Reverse removal procedure noting the following.

- Tighten lower anchor bolts to specified torque.

**Tightening torque**

**Lower anchor bolt (a): 35 N·m (3.5 kgf-m, 25.5 lb-ft)**

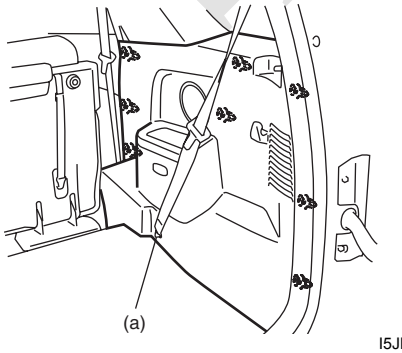


I5JB0A930022-02

www.cargeek.ir

## GPS Antenna Removal and Installation (If Equipped)

S5JB0A9306028

### Removal

1) Remove center ventilation louver referring to step 1) and 2) of “Information Display (Clock) Removal and Installation: ”.
2) Disconnect GPS antenna connector from navigation unit referring to “Audio Unit Removal and Installation: ”.
3) Remove GPS antenna (1).

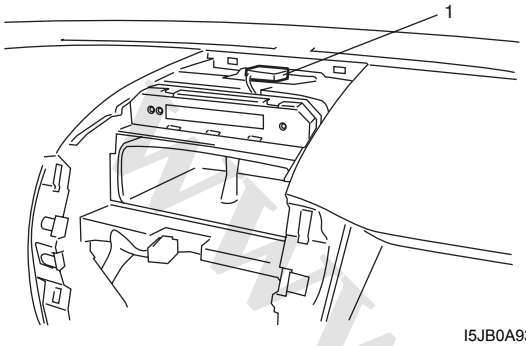


I5JB0A930023-01

### Installation

Reverse removal procedure.

## Horn Removal and Installation

S5JB0A9306022

### Removal

1) Disconnect negative (–) cable at battery.
2) Remove front bumper referring to “Front Bumper Components: in Section 9K”.
3) Disconnect horn connector (1).
4) Remove horn (2).

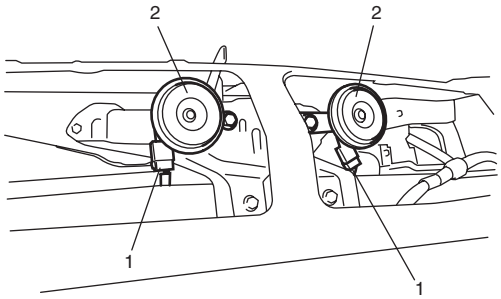


I5JB0A930029-01

### Installation

Reverse removal procedure for installation.

## Horn Inspection

S5JB0A9306023

1) Disconnect negative (–) cable at battery.
2) Remove front bumper referring to “Front Bumper Components: in Section 9K”.
3) Disconnect horn connector (1).
4) Connect battery positive (+) to terminal of horn connector (2) and negative (–) terminal to body ground.
   If horn is not sounding, replace horn.

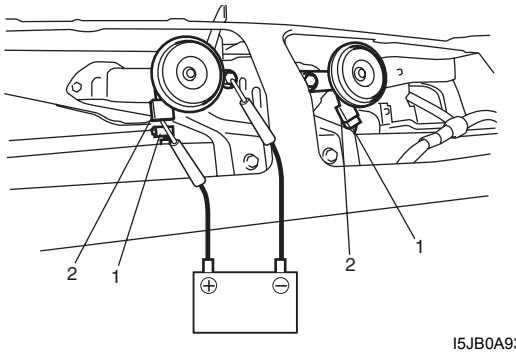


I5JB0A930024-01

## Horn Relay Inspection

S5JB0A9306024

1) Disconnect negative (–) cable at battery.
2) Remove horn relay (included in integration relay) (1) from main fuse box (2).

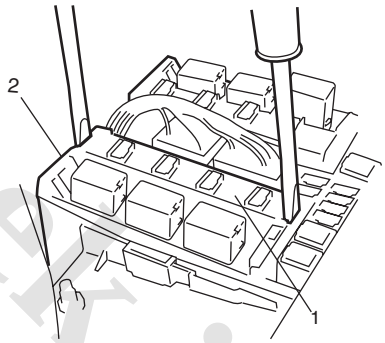


I5JB0A950031-01

www.cargeek.ir

 www.CarGeek.ir

3) Check that there is no continuity between terminal “a” and “b”.
   If there is continuity, replace relay.
4) Check that there is continuity between terminals “a” and “b” when a 12 V battery is connected to terminal “a” and “c”.
   If malfunction is found, replace integration relay.

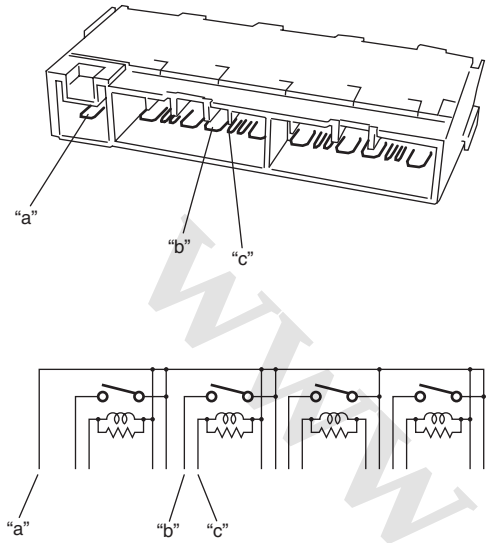


I5JB0A930025-02

## Antenna Base Removal and Installation

S5JB0A9306025

### Removal

1) Remove antenna (1) from antenna base (2).
2) Remove head lining referring to “Head Lining Removal and Installation: in Section 9H”.
3) Disconnect antenna feeder (3) from antenna base (2).
4) Remove antenna base (2) from vehicle.

### Installation

Reverse removal procedure noting the following.

- Tighten antenna base mounting nut to specified torque.

  **Tightening torque**
  **Antenna base mounting nut (a): 10 N·m (1.0 kgf-m, 7.5 lb-ft)**

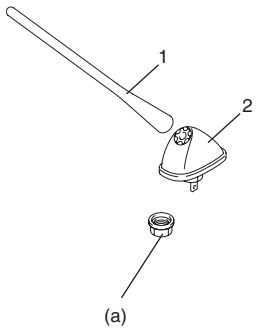


I4RH01930009-01

## Remote Audio Control Switch Removal and Installation

S5JB0A9306029

### Removal

1) Remove steering wheel referring to “Steering Wheel Removal and Installation: in Section 6B”.
2) Remove steering wheel cover (1) from steering wheel.

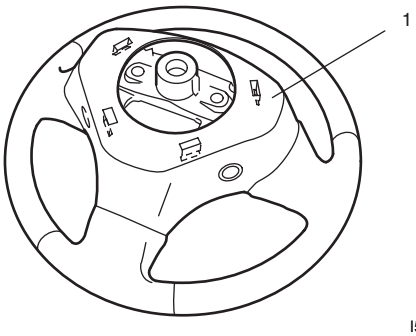


I5JB0A930026-01

3) Remove remote audio control switch (1) with cruise control switch (3) (if equipped).

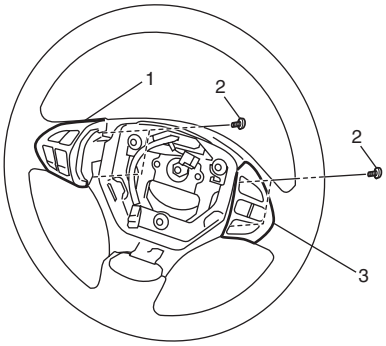


I5JB0A930027-01

| |
|---|
| 2. screw |

### Installation

Reverse removal procedure for installation.

www.cargeek.ir

### Remote Audio Control Switch Inspection

S5JB0A9306026

1) Remove driver air bag (inflator) module referring to "Driver Air Bag (Inflator) Module Removal and Installation: in Section 8B".
2) Disconnect remote audio control switch connector from contact coil.
3) Check switch for resistance between "a" and "b" terminals under each condition below.
   If check result is not satisfactory, replace remote audio control switch.

   **"ENTER", "+" and "–" switch resistance**
   **All switches released (OFF): 4700 – 5600 kΩ**
   **"ENTER" switch (1) pushing on (ON): 50 – 60 Ω**
   **"+" switch (2) pushing on (ON): 120 – 140 Ω**
   **"–" switch (3) pushing on (ON): 220 – 260 Ω**
4) Check switch for resistance between "a" and "b" terminals under each condition below.
   If check result is not satisfactory, replace remote audio control switch.

   **"MODE", "∧" and "∨" switch resistance**
   **All switches released (OFF): 4700 – 5600 kΩ**
   **"MODE" switch (4) pushing on (ON): 370 – 460 Ω**
   **"∧" witch (5) pushing on (ON): 680 – 820 Ω**
   **"∨" switch (6) pushing on (ON): 1400 – 1700 Ω**

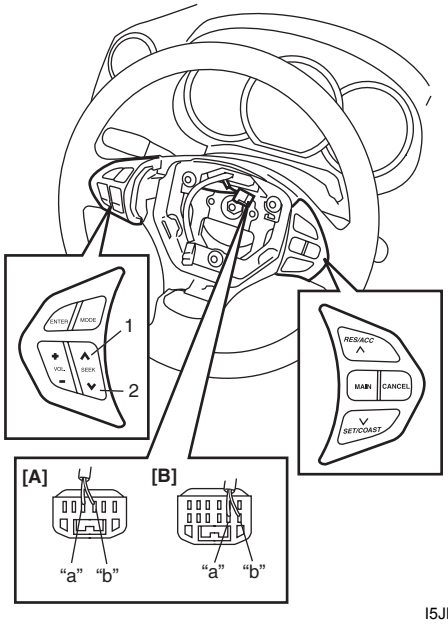


I5JB0A930028-01

| | |
|---|---|
| [A]: | Without cruise control system |
| [B]: | With cruise control system |

## Specifications

### Tightening Torque Specifications

S5JB0A9307001

| Fastening part | Tightening torque | | | Note |
|---|---|---|---|---|
| | N·m | kgf-m | lb-ft | |
| Instrument panel mounting bolt | 23 | 2.3 | 17.0 | ☞ |
| Lower anchor bolt | 35 | 3.5 | 25.5 | ☞ |
| Antenna base mounting nut | 10 | 1.0 | 7.5 | ☞ |

**NOTE**

**The specified tightening torque is also described in the following.**
**"Audio System Component Location: "**

**Reference:**
For the tightening torque of fastener not specified in this section, refer to "Fastener Information: in Section 0A".

www.cargeek.ir

www.CarGeek.ir

# Wipers / Washers

## Diagnostic Information and Procedures

### Front Wiper and Washer Symptom Diagnosis

S5JB0A9404001

| Condition | Possible cause | Correction / Reference Item |
|---|---|---|
| ***Wiper malfunctions*** | Circuit fuse blown | *Replace fuse and check for short circuit.* |
| | Wiper motor faulty | *Check wiper motor referring to "Windshield Wiper Motor Inspection: ".* |
| | Combination switch (wiper switch) faulty | *Check wiper switch referring to "Windshield Wiper and Washer Switch Inspection: ".* |
| | Wiring or grounding faulty | *Repair circuit.* |
| ***Washer malfunctions*** | Washer hose or nozzle clogged | *Clean or repair clogged hose or nozzle.* |
| | Circuit fuse blown | *Replace fuse and check for short circuit.* |
| | Washer motor faulty | *Check washer motor referring to "Washer Pump Inspection: ".* |
| | Combination switch (washer switch) faulty | *Check washer switch referring to "Windshield Wiper and Washer Switch Inspection: ".* |
| | Wiring or grounding faulty | *Repair circuit.* |

### Rear Wiper and Washer Symptom Diagnosis (If Equipped)

S5JB0A9404002

| Condition | Possible cause | Correction / Reference Item |
|---|---|---|
| ***Wiper malfunctions***<br>***NOTE***<br>• ***Use of SUZUKI scan tool makes it easy to check whether a faulty condition is on the input side or output side of BCM. For checking procedure, refer to "Diagnosis Using Output Test Function of SUZUKI Scan Tool" under "Scan Tool Data: in Section 10B".***<br>• ***Check each part in the order from the top of the following list.*** | Circuit fuse blown | *Replace fuse and check for short circuit.* |
| | Wiper motor faulty | *Check wiper motor referring to "Rear Wiper Motor Inspection (If Equipped): ".* |
| | Combination switch (wiper switch) faulty | *Check wiper switch referring to "Rear Wiper and Washer Switch Inspection: ".* |
| | Rear wiper relay faulty | *Check rear wiper relay referring to "Rear Wiper Relay Inspection: ".* |
| | Wiring or grounding faulty | *Repair circuit.* |
| | BCM faulty | *Replace after making sure that none of above parts is faulty.* |
| ***Washer malfunctions*** | Washer hose or nozzle clogged | *Clean or repair clogged hose or nozzle.* |
| | Circuit fuse blown | *Replace fuse and check for short circuit.* |
| | Washer motor faulty | *Check washer motor referring to "Washer Pump Inspection: ".* |
| | Combination switch (washer switch) faulty | *Check washer switch referring to "Rear Wiper and Washer Switch Inspection: ".* |
| | Wiring or grounding faulty | *Repair circuit.* |

www.cargeek.ir

www.CarGeek.ir


## Headlight Washer Symptom Diagnosis (If Equipped)

S5JB0A9404003

| Condition | Possible cause | Correction / Reference Item |
|---|---|---|
| ***Headlight washer malfunction*** | Washer hose or nozzle clogged | *Clean or repair clogged hose or nozzle.* |
| | Circuit fuse blown | *Replace fuse and check for short circuit.* |
| | Headlight washer switch faulty | *Check headlight washer switch referring to "Headlight Washer Switch Inspection (If Equipped): ".* |
| | Combination switch (washer switch) faulty | *Check washer switch referring to "Windshield Wiper and Washer Switch Inspection: ".* |
| | Headlight washer pump faulty | *Check headlight washer pump referring to "Washer Pump Inspection: ".* |
| | Wiring or ground faulty | *Repair circuit.* |
| | Headlight washer control module faulty | *Check headlight washer control module referring to "Inspection of Headlight Washer Control Module and Its Circuit: ".* |

## Headlight Washer Operation Inspection

S5JB0A9404004

1) Turn ignition switch to ON position.
2) Turn lighting switch to "HEAD" position.
3) Make sure that washer fluid is spouted out from the headlight washer nozzle to the headlight surface when the headlight washer switch or front washer switch is turned on.
   If headlight washer does not operate, go to "Headlight Washer Symptom Diagnosis (If Equipped)".

**NOTE**

**The headlight washer works only when the headlight is turned on. The headlight washer spouts washer fluid on the headlight surface when the headlight washer switch or front washer switch is turned on. In addition, in case using the front washer switch, the headlight washer works only once after the headlight on.**

www.cargeek.ir
www.cargeek.ir

www.CarGeek.ir

## Inspection of Headlight Washer Control Module and Its Circuit

S5JB0A9404005

1) Remove headlight washer control module from blower unit.
2) Connect connector to headlight washer control module.
3) Check that the voltage between the following terminals and vehicle body ground are specifications under each condition.
   If measuring voltage is not within specification, first check related switch and applicable wire harness circuit for open or short. And if all wire harness circuits and connections are normal, replace headlight washer control module.

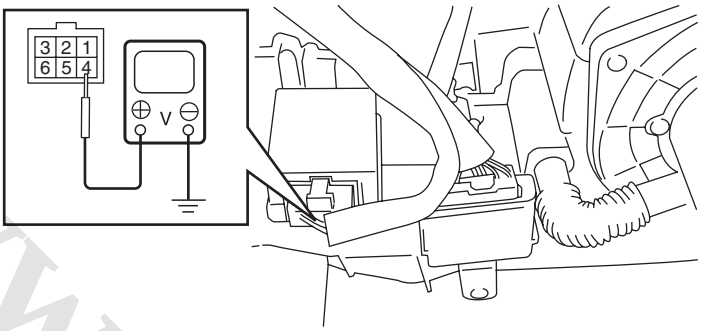


I5JB0A940001-01

| Terminal | Circuit | Specification | Condition |
|---|---|---|---|
| 1 | To headlight washer switch | 0 – 1 V | Ignition switch is at ON position, lighting switch is at HEAD position and headlight washer switch is pushed. |
| | | 4 – 6 V | Ignition switch is at ON position and headlight washer switch is not pushed. |
| 2 | Ground | 0 – 1 V | — |
| 3 | To headlight washer motor | 0 – 1 V | When headlight washer pump is in operation.<br>The headlight washer pump works for 0.8 seconds in case that the following conditions are all satisfied.<br>• Ignition switch is at ON position<br>• Lighting switch is at HEAD position<br>• Windshield washer switch is at ON position or headlight washer switch is pushed |
| | | 10 – 14 V | When headlight washer pump is not in operation. |
| 4 | To lighting switch | 0 – 1 V | Lighting switch is at HEAD position. |
| | | 10 – 14 V | Lighting switch is at OFF position. |
| 5 | To windshield washer switch | 0 – 1 V | Ignition switch is at ON position and windshield washer switch is at ON position. |
| | | 10 – 14 V | Ignition switch is at ON position and windshield washer switch is at OFF position. |
| 6 | To ignition switch | 0 – 1 V | Ignition switch is at OFF position. |
| | | 10 – 14 V | Ignition switch is at ON position. |

www.cargeek.ir

www.CarGeek.ir


# Repair Instructions

## Wipers and Washers Components

S5JB0A9406001

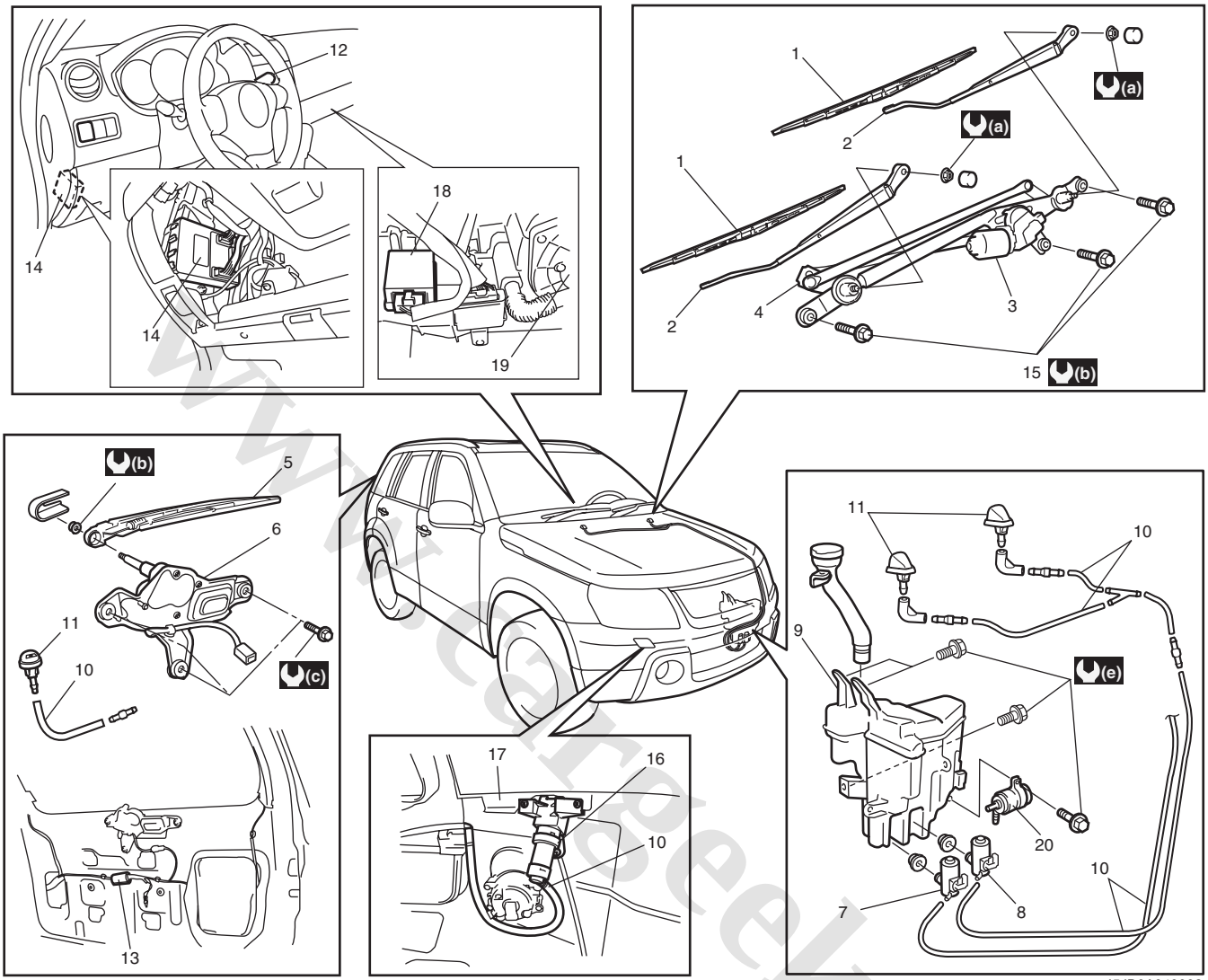


I5JB0A940002-01

| | | | |
|---|---|---|---|
| 1. Windshield wiper blade | 8. Washer pump for rear washer (if equipped) | 15. Windshield wiper bolt | (b) : 8.5 N·m (0.85 kgf-m, 6.5 lb-ft) |
| 2. Windshield wiper arm | 9. Washer tank | 16. Headlight washer nozzle | (c) : 7 N·m (0.7 kgf-m, 5.0 lb-ft) |
| 3. Windshield wiper motor | 10. Washer hose | 17. Front bumper | (d) : 8 N·m (0.8 kgf-m, 6.0 lb-ft) |
| 4. Windshield wiper link | 11. Washer nozzle | 18. Headlight washer control module | (e) : 4 N·m (0.4 kgf-m, 3.0 lb-ft) |
| 5. Rear wiper arm with blade assembly (if equipped) | 12. Wiper switch | 19. Blower fan motor | |
| 6. Rear wiper motor (if equipped) | 13. Rear wiper relay (if equipped) | 20. Headlight washer pump (if equipped) | |
| 7. Washer pump for windshield washer | 14. BCM | (a) : 14 N·m (1.4 kgf-m, 10.5 lb-ft) | |

www.cargeek.ir

www.CarGeek.ir

## Washer Tank and Washer Pump Removal and Installation

S5JB0A9406002

### Removal

1) Disconnect negative (–) cable at battery.
2) Remove front bumper referring to “Front Bumper Components: in Section 9K”.
3) Remove right headlight housing from vehicle body referring to “Headlight Housing Removal and Installation: in Section 9B”.
4) Remove grommet (1) and upper part (2) of washer tank.

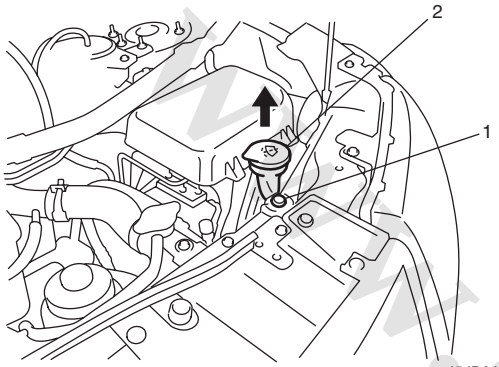


I5JB0A940003-01

5) Remove washer tank attaching bolts (4).
6) Disconnect washer pump lead wire couplers and hoses.
7) Remove washer tank (1).
8) Remove windshield washer pump (2), rear washer pump (3) (if equipped) and headlight washer pump (5) (if equipped) from washer tank (1).

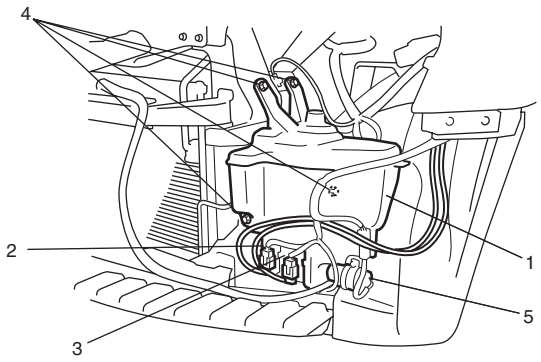


I5JB0A940005-01

### Installation

Install washer tank and washer pump by reversing removal procedure, noting the following instructions.

- Connect washer pump connector(s) securely.
- Tighten washer tank bolts to specified torque.

**Tightening torque**
**Washer tank bolt (a): 4 N·m (0.4 kgf-m, 3.0 lb-ft)**

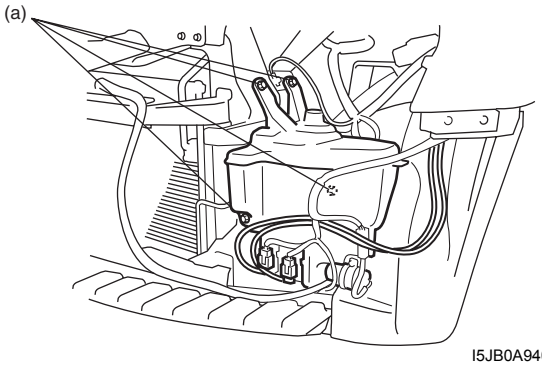


I5JB0A940004-01

- After installing headlight housing be sure to inspect and adjust aiming referring to “Headlight Aiming Adjustment with Screen: in Section 9B”.

## Washer Pump Inspection

S5JB0A9406003

1) Connect battery positive (+) and negative (–) terminals to pump (+) and (–) terminals respectively.
2) Check front, rear or headlight washer pump for operation.
   If pump does not operate, replace washer pump.

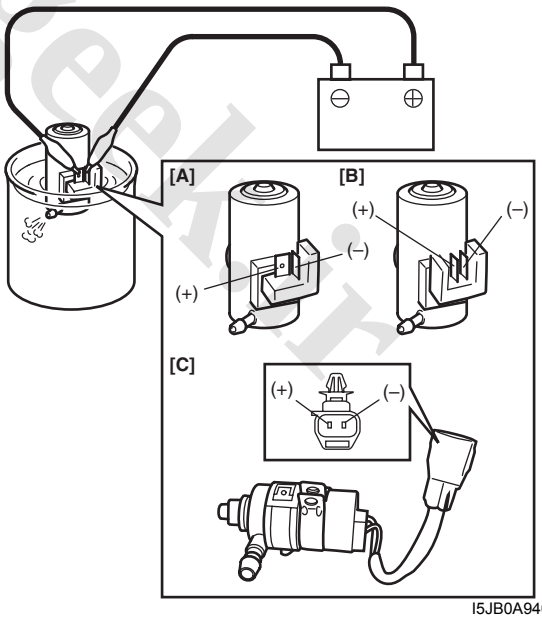


I5JB0A940006-01

| | |
|---|---|
| [A]: | Windshield washer pump |
| [B]: | Rear washer pump |
| [C]: | Headlight washer pump |

www.cargeek.ir

www.CarGeek.ir


## Windshield Wiper Removal and Installation

S5JB0A9406004

### Removal

1) Disconnect negative (–) cable at battery.
2) Remove wiper pivot caps (1) and wiper arm nuts (2), and remove windshield wiper arms with wiper blades (3).

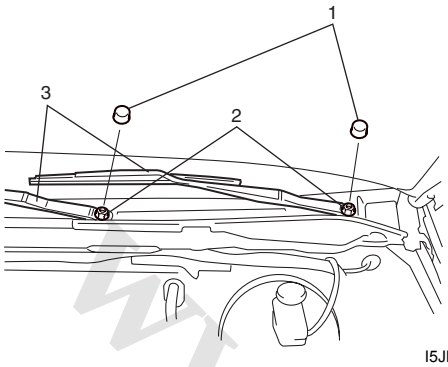


I5JB0A940007-01

3) Remove cowl top garnish referring to “Cowl Top Components: in Section 9K”.
4) Disconnect coupler from windshield wiper motor.
5) Remove bolts (1), and remove windshield wiper assembly (2).

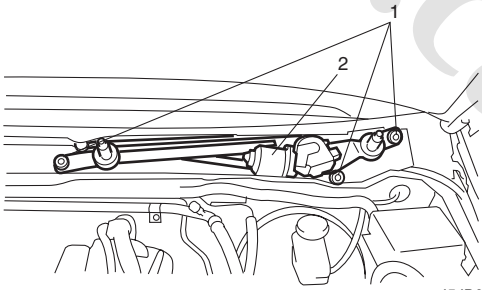


I5JB0A940008-01

### Installation

1) Install windshield wiper assembly (1), and tighten bolts (“1” – “3”) according to numerical order as shown in figure.

**Tightening torque**
**Windshield wiper bolt (a): 8.5 N·m (0.85 kgf-m, 6.5 lb-ft)**

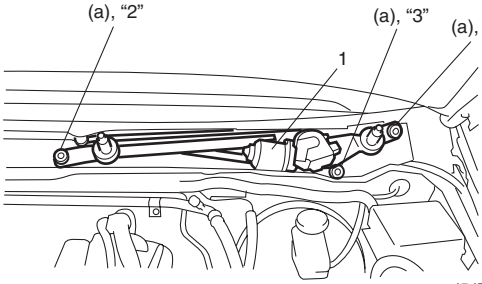


I5JB0A940026-01

2) Connect coupler to windshield wiper motor.
3) Install cowl top garnish referring to “Cowl Top Components: in Section 9K”.
4) Install windshield wiper arms with wiper blades (1) to specified position as shown in figure, and then tighten windshield wiper nuts to specified torque.

**Tightening torque**
**Windshield wiper arm nut (a): 14 N·m (1.4 kgf-m, 10.5 lb-ft)**

5) Install wiper pivot caps (2) to windshield wiper arm nuts

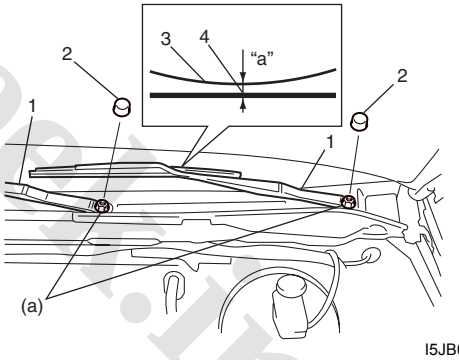


I5JB0A940009-01

| | |
|---|---|
| “a”: 5 mm (0.20 in.) | 4. Wiper blade center |
| 3. Ceramic line | |

6) Connect negative (–) cable to battery.

www.cargeek.ir

www.CarGeek.ir

## Windshield Wiper Motor Inspection

S5JB0A9406005

**NOTE**

**Make sure that battery voltage is 12 V or more.**

1) Disconnect negative (–) cable at battery.
2) Remove windshield wiper arms with wiper blades referring to “Windshield Wiper Removal and Installation: ”.
3) Remove cowl top garnish referring to “Cowl Top Components: in Section 9K”.
4) Disconnect coupler from windshield wiper motor.
5) Reinstall windshield wiper arms with wiper blade. For details, refer to Step 4) of “Installation” in “Windshield Wiper Removal and Installation: ”.
6) Check windshield wiper motor for operation as follows
   - For motor operation in low speed
     a. Connect battery positive (+) terminal to terminal “1” and its negative (–) terminal to terminal “5”.
     b. Check if wiper arm reciprocation speed is as specification. If check result is not as specified, replace motor.

     **Specification**
     **44 – 52 r/min (rpm)**

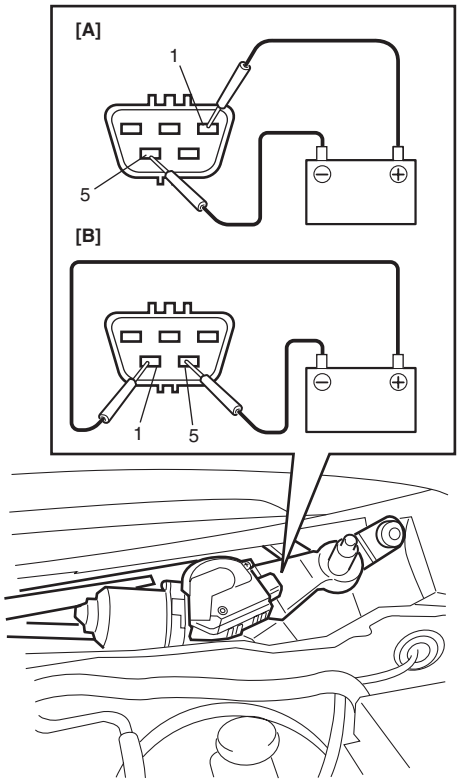


I5JB0A940010-01

| | |
|---|---|
| [A]: | Left-hand steering vehicle |
| [B]: | Right-hand steering vehicle |

   - For motor operation in high speed
     a. Connect battery positive (+) terminal to “2” and its negative (–) terminal to terminal “5”.
     b. Check if motor revolution speed is as specification. If check result is not as specified, replace motor.

     **Specification**
     **64 – 78 r/min (rpm)**

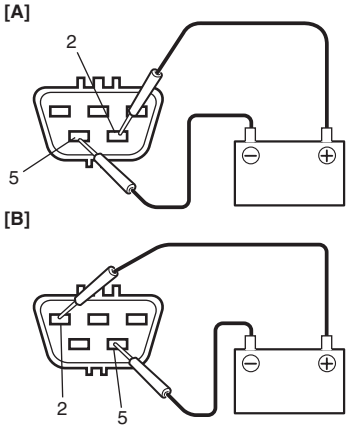


I5JB0A940011-01

| | |
|---|---|
| [A]: | Left-hand steering vehicle |
| [B]: | Right-hand steering vehicle |

www.cargeek.ir
www.cargeek.ir

www.CarGeek.ir


- For automatic stop operation
  a. Connect battery positive (+) terminal to terminal “1” and its negative (–) terminal to terminal “5” and let the motor turn.
  b. Disconnect terminal “1” from battery positive (+) terminal, and let the motor stop.
  c. Connect terminals “1” and “3” with a jumper wire, and connect terminal “4” to battery positive (+) terminal.
  Observe the motor turns once again then stops at a specified position as shown.

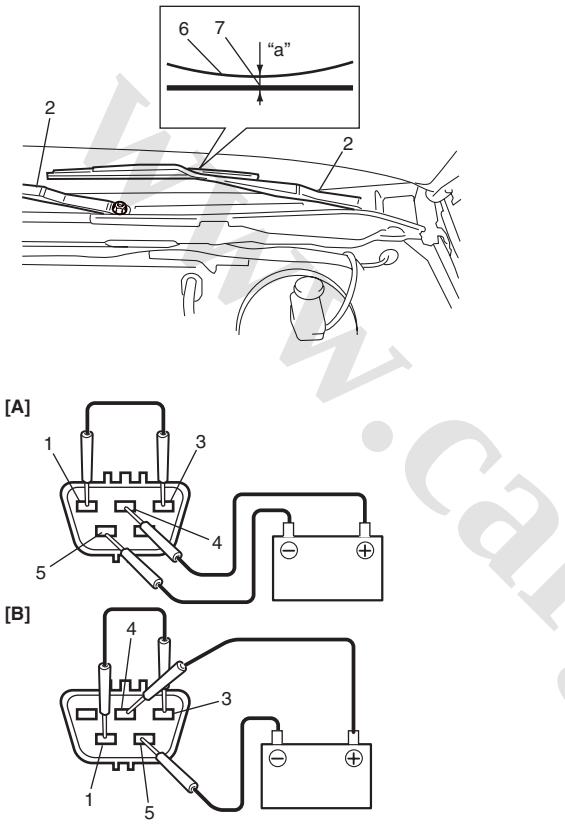


I5JB0A940012-01

| | |
|---|---|
| [A]: Left-hand steering vehicle | 2. Windshield wiper arms with wiper blades |
| [B]: Right-hand steering vehicle | 6. Ceramic line |
| “a”: 5 mm (0.20 in.) | 7. Wiper blade center |

  d. Repeat Step 1) to 3) several times and check that the motor stops at the specified position every time.
  If check result is not satisfied, replace motor.

## Rear Wiper Removal and Installation (If Equipped)

S5JB0A9406006

### Removal

1) Disconnect negative (–) cable at battery.
2) Remove arm cover (1), rear wiper arm nut (2) and rear wiper arm with blade assembly (3).

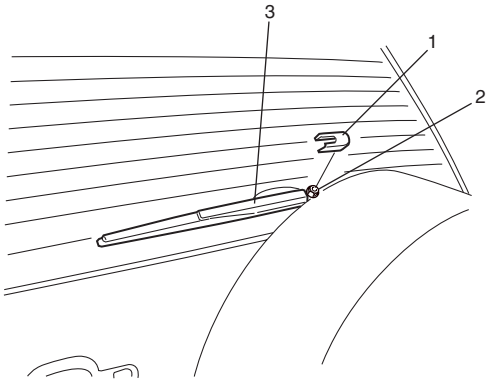


I5JB0A940013-02

3) Remove rear end door trim referring to “Rear End Door Lock Assembly Removal and Installation: in Section 9F”.
4) Disconnect coupler from rear wiper motor.
5) Remove rear wiper motor.

### Installation

1) Install rear wiper motor (1) and tighten rear wiper motor mounting bolts to specified torque.

**Tightening torque**
**Rear wiper motor mounting bolt (a): 7 N·m (0.7 kgf-m, 5.0 lb-ft)**

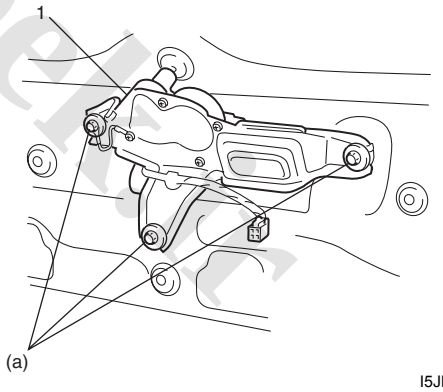


I5JB0A940014-01

www.cargeek.ir

www.CarGeek.ir

2) Connect coupler to rear wiper motor
3) Install rear end door trim referring to “Rear End Door Lock Assembly Removal and Installation: in Section 9F”.
4) Install rear wiper arm with blade assembly (1) to specified position as shown in figure.

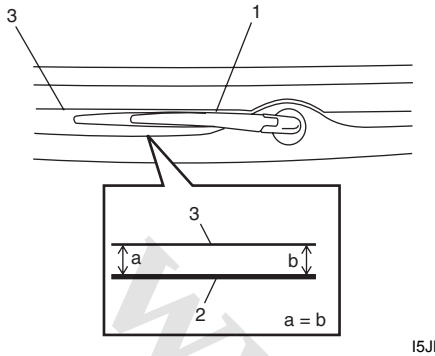


I5JB0A940015-01

| | |
|---|---|
| 2. | Rear wiper blade |
| 3. | Defogger wire |

5) Tighten rear wiper arm nut to specified torque, and then install arm cover (1).

**Tightening torque**
**Rear wiper arm nut (a): 8 N·m (0.8 kgf-m, 6.0 lb-ft)**

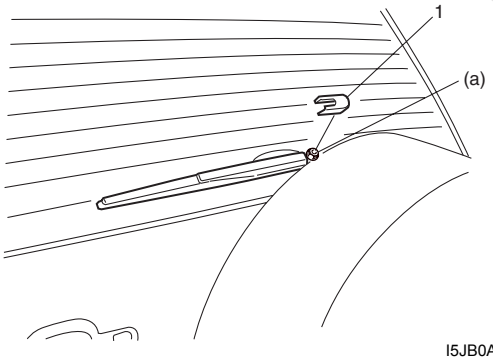


I5JB0A940016-01

6) Connect negative (–) cable to battery.

## Rear Wiper Motor Inspection (If Equipped)

S5JB0A9406007

**NOTE**

**Make sure that battery voltage is 12 V or more.**

1) Make a mark (1) on rear wiper motor (2) stop position as shown.

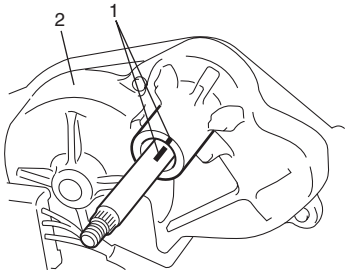


I5JB0A940017-01

2) Check rear wiper motor for operation as follows.
   - For motor operation
     a. Connect battery positive terminal to terminal “1” and its negative terminal to body ground.
     b. Check motor revolution speed as specification. If check result is not as specified, replace motor.

     **Specification**
     **33 – 43 r/min (rpm)**

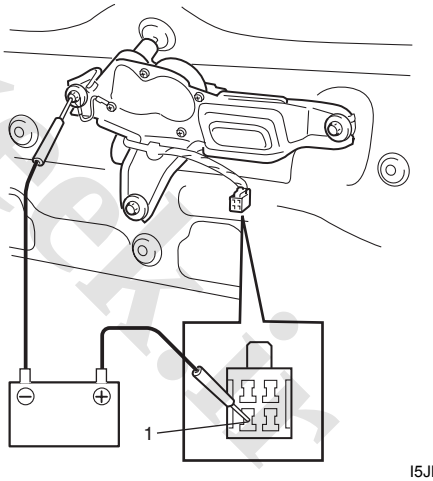


I5JB0A940018-01

www.cargeek.ir

www.CarGeek.ir


- For automatic stop operation
  a. Connect battery positive (+) terminal to terminal “1” and its negative (–) terminal to body ground and let the motor turn.
  b. Connect terminal “2” and “3” by a jumper wire.
  c. Observe the motor (4) turns once again then stops at a specified position as shown.

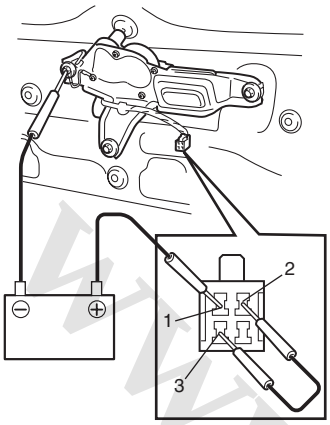


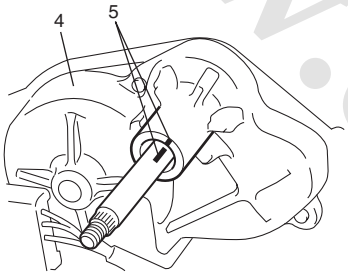


I5JB0A940019-01

5. Mark

  d. Repeat Step a. to c. several times and check that the motor stops at the specified position every time.
     If check result is not satisfied, replace motor.

## Windshield Wiper and Washer Switch Removal and Installation

S5JB0A9406008

### Removal

1) Disconnect negative (–) cable at battery.
2) Remove steering column hole cover (1).
3) Remove steering column covers (2).
   Turn steering wheel to access steering column cover rear end screws (3).

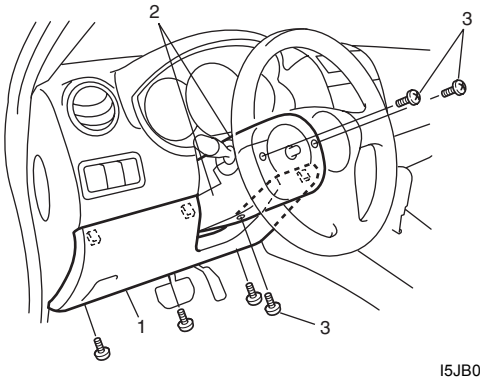


I5JB0A940020-01

4) Remove windshield wiper and washer switch (1) from combination switch assembly (2) and disconnect its coupler (3).

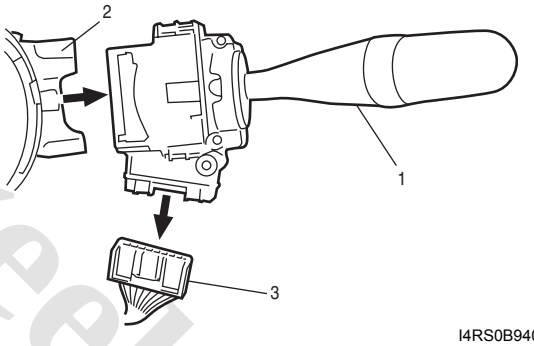


I4RS0B940008-01

### Installation

Reverse removal procedure.

www.cargeek.ir

www.CarGeek.ir

## Windshield Wiper and Washer Switch Inspection

S5JB0A9406009

### Windshield Wiper and Washer Switch

Check for continuity between terminals at each switch position. If check result is not as specified, replace switch.

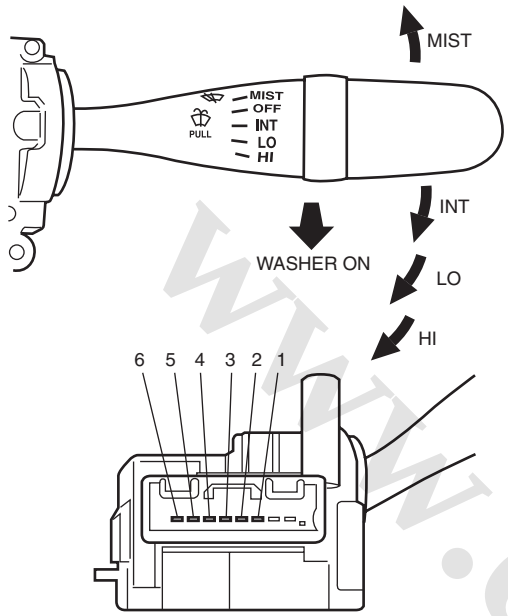


| Wiper SW \ Terminal | 6 | 5 | 4 | 3 |
|---|---|---|---|---|
| OFF | | | ○ | ○ |
| INT | | | ○ | ○ |
| LO | | ○ | ○ | |
| HI | ○ | ○ | | |
| MIST | | ○ | ○ | |

| Washer SW \ Terminal | 1 | 2 |
|---|---|---|
| ON | ○ | ○ |
| OFF | | |

I4RS0B940009-03

### Intermittent Wiper Relay Circuit

1) Turn the windshield wiper switch to “INT” position.
2) Connect battery positive (+) terminal to terminal “5” and its negative (–) terminal to terminal “2”.
3) Connect voltmeter positive lead to terminal “4” and its negative lead to terminal “2”.
4) Check that the voltmeter indicates the battery voltage (10 – 14 V).
5) Connect terminal “3” and terminal “5” by a jumper wire.

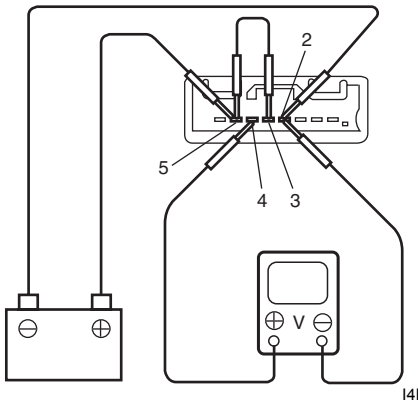


I4RS0B940010-01

6) Disconnect end of the jumper wire from terminal “5”.
7) Connect disconnected jumper wire end to terminal “2”, then check that voltage between terminal “4” and terminal “2” changes as shown.
If check result is not satisfied, replace switch.

| INT time control switch position | Voltage |
|---|---|
| INT TIME | 10-14V, 0V, 1.6 ± 1 sec. |
| INT TIME | 10-14V, 0V, 10.7 ± 5 sec. |

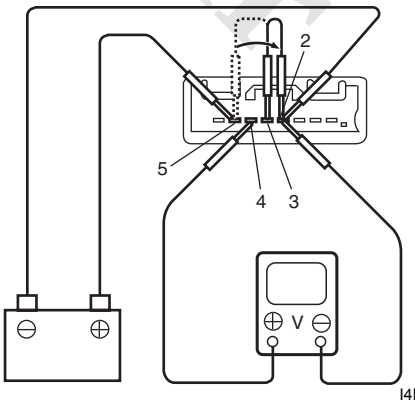


I4RS0B940011-01

www.cargeek.ir

www.CarGeek.ir


### Washer Linked Circuit

1) Make sure that front wiper switch is at “OFF” position.
2) Connect battery positive (+) terminal to terminal “5” and its negative (–) terminal to terminal “2”.
3) Connect voltmeter positive lead to terminal “4” and its negative lead to terminal “2”.
4) When front washer switch is ON, check that voltage changes as shown in figure.
   If check result is not satisfied, replace switch.

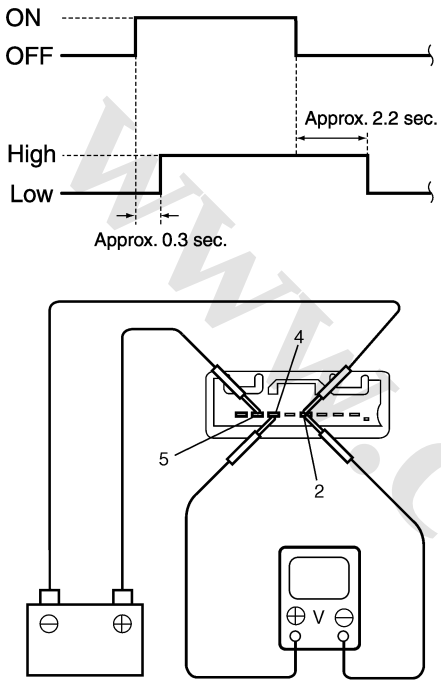

I4RS0B940012-01

## Rear Wiper and Washer Switch Removal and Installation

S5JB0A9406010

For removal and installation, refer to “Windshield Wiper and Washer Switch Removal and Installation: ”.

## Rear Wiper and Washer Switch Inspection

S5JB0A9406011

Check for continuity between terminals at each switch position. If check result is not as specified, replace switch.

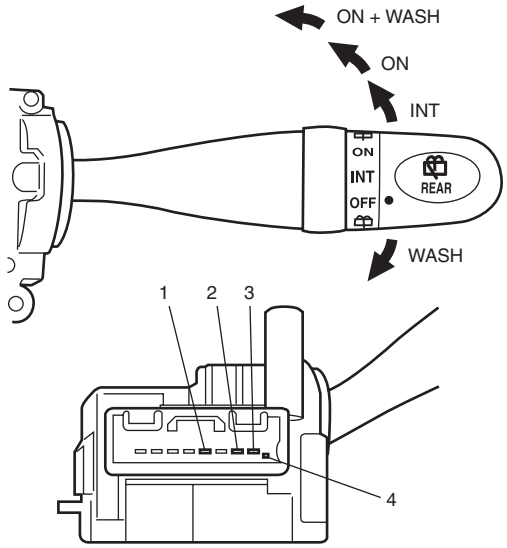


| Position \ Terminal | 1 | 2 | 3 | 4 |
|---|---|---|---|---|
| OFF | | | | |
| INT | ○ | | | ○ |
| ON | ○ | | ○ | |
| ON + WASH | ○ | ○ | ○ | |
| WASH | ○ | ○ | | |

I4RS0B940013-03

## Rear Wiper Relay Removal and Installation

S5JB0A9406012

### Removal

1) Disconnect negative (–) cable at battery.
2) Remove rear end door trim from rear end door referring to “Rear End Door Lock Assembly Removal and Installation: in Section 9F”.
3) Remove rear wiper relay (1).

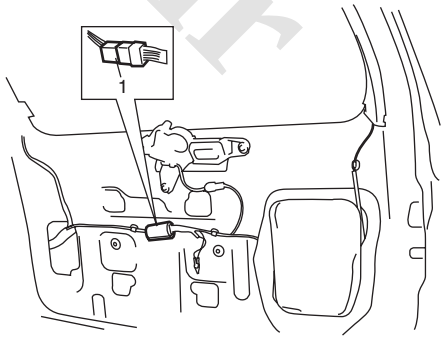

I5JB0A940021-01

### Installation

Reverse removal procedure for installation.

www.cargeek.ir

www.CarGeek.ir

## Rear Wiper Relay Inspection

S5JB0A9406013

1) Check that there is no continuity between terminal “4” and “5”. If there is continuity, replace relay.
2) Check that there is continuity between terminal “3” and “5”. If there is no continuity, replace relay.
3) Connect battery positive (+) terminal to terminal “2” of relay.
4) Connect battery negative (–) terminal to terminal “1” of relay.
5) Check continuity between terminal “4” and “5”. If there is no continuity when relay is connected to the battery, replace relay.

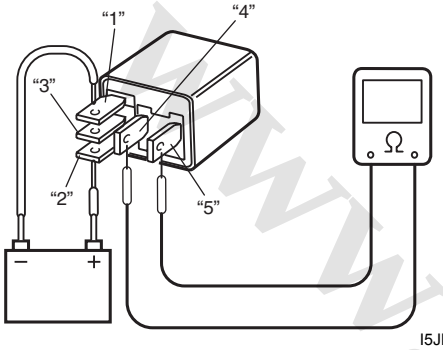


I5JB0A940022-01

## Headlight Washer Switch Inspection (If Equipped)

S5JB0A9406014

Check for continuity between terminals at each switch position.
If check result is not as specified, replace switch.

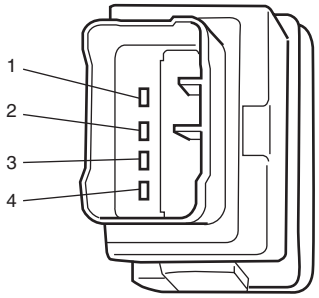


| Terminal / Switch Position | 1 | 2 | 3 | 4 |
|---|---|---|---|---|
| OFF | ○ | | ○ ⓪ | ○ |
| ON (PUSH IN) | | ○ | ○ ⓪ | ○ |

I5JB0A940023-01

## Headlight Washer Pump Removal and Installation (If Equipped)

S5JB0A9406015

### Removal

1) Remove front bumper referring to “Front Bumper Components: in Section 9K”.
2) Disconnect headlight washer hose (1) and washer pump connector (2) from headlight washer pump (3).
3) Remove headlight washer pump from washer tank.

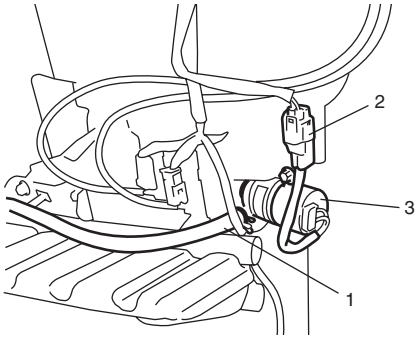


I5JB0A940024-01

### Installation

Reverse removal procedure for installation.

## Headlight Washer Nozzle Removal and Installation (If Equipped)

S5JB0A9406016

### Removal

1) Remove front bumper referring to “Front Bumper Components: in Section 9K”.
2) Disconnect headlight washer hose (1) from headlight washer nozzle (2).
3) Remove headlight washer nozzle from front bumper.

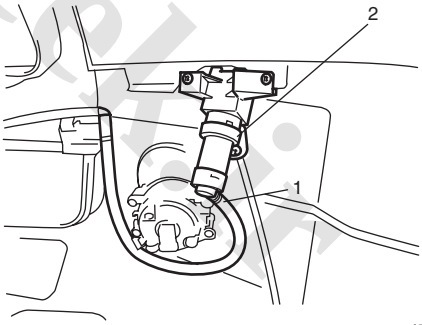


I5JB0A940025-01

### Installation

Reverse removal procedure for installation.

www.cargeek.ir

www.CarGeek.ir


# Specifications

## Tightening Torque Specifications

S5JB0A9407001

| Fastening part | Tightening torque | | | Note |
|---|---|---|---|---|
| | N·m | kgf-m | lb-ft | |
| Washer tank bolt | 4 | 0.4 | 3.0 | ☞ |
| Windshield wiper bolt | 8.5 | 0.85 | 6.5 | ☞ |
| Windshield wiper arm nut | 14 | 1.4 | 10.5 | ☞ |
| Rear wiper motor mounting bolt | 7 | 0.7 | 5.0 | ☞ |
| Rear wiper arm nut | 8 | 0.8 | 6.0 | ☞ |

**NOTE**

**The specified tightening torque is also described in the following.**
**“Wipers and Washers Components: ”**

**Reference:**
For the tightening torque of fastener not specified in this section, refer to “Fastener Information:  in Section 0A”.

www.cargeek.ir

www.cargeek.ir

www.CarGeek.ir

# Glass / Windows / Mirrors

## General Description

### Rear End Door Window Defogger System Description

S5JB0A9501001

The rear end door window defogger is controlled by BCM. For the BCM description refer to “BCM General Description: in Section 10B”.

### Windshield Construction

S5JB0A9501002

The windshield is installed by using a special type of adhesive (that is, one component urethane adhesive used with primer). For the windshield replacement, it is important to use an adhesive which provides sufficient adhesion strength and follow the proper procedure.

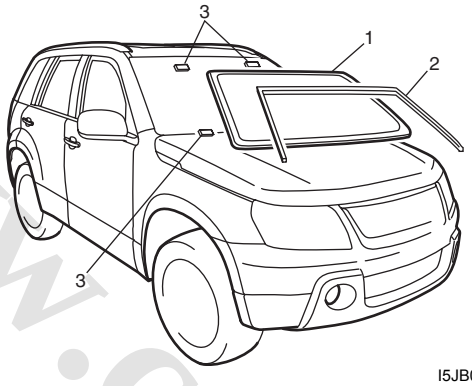


I5JB0A950001-01

| | |
|---|---|
| 1. Windshield glass | 3. Fastener |
| 2. Windshield molding | |

**⚠ CAUTION**

- **Described is the glass replacement by using 3 types of primers and 1 type of adhesive made by YOKOHAMA (one component urethane adhesive to be used with primer in combination). When using primer and adhesive made by other manufacturers, be sure to refer to handling instructions supplied with them. Negligence in following such procedure or misuse of the adhesive in any way hinders its inherent adhesive property. Therefore, before the work, make sure to read carefully the instruction and description given by the maker of the adhesive to be used and be sure to follow the procedure and observe each precaution throughout the work.**
- **Should coated surface be scratched or otherwise damaged, be sure to repair damaged part, or corrosion may start from there.**

www.cargeek.ir

www.CarGeek.ir


Use the specific adhesive which has the following property.

**Glass adhesive shearing strength**
**40 kg/cm$^2$ (569 lb/in$^2$) or more**

Adhesive materials and tools required for removal and installation.

- One component urethane adhesive and primers used in combination (For one sheet of windshield).
  - Adhesive (470 g (15.7 oz.))
  - Primer for glass (30 g (1.0 oz.))
  - Primer for body (30 g (1.0 oz.))
  - Primer for molding (30 g (1.0 oz.))
- Eyeleteer
- Piano string
- Windshield knife
- Brush for primer application (2 pcs)
- Knife
- Rubber sucker grip
- Sealant gun (for filling adhesive)
- Putty spatula (for correcting adhered parts)

## Rear Quarter Window Construction

S5JB0A9501003

The rear quarter window is installed by using a special type of adhesive (that is, one component urethane adhesive used with primer). For the rear quarter window replacement, it is important to use an adhesive which provides sufficient adhesion strength and follow the proper procedure.

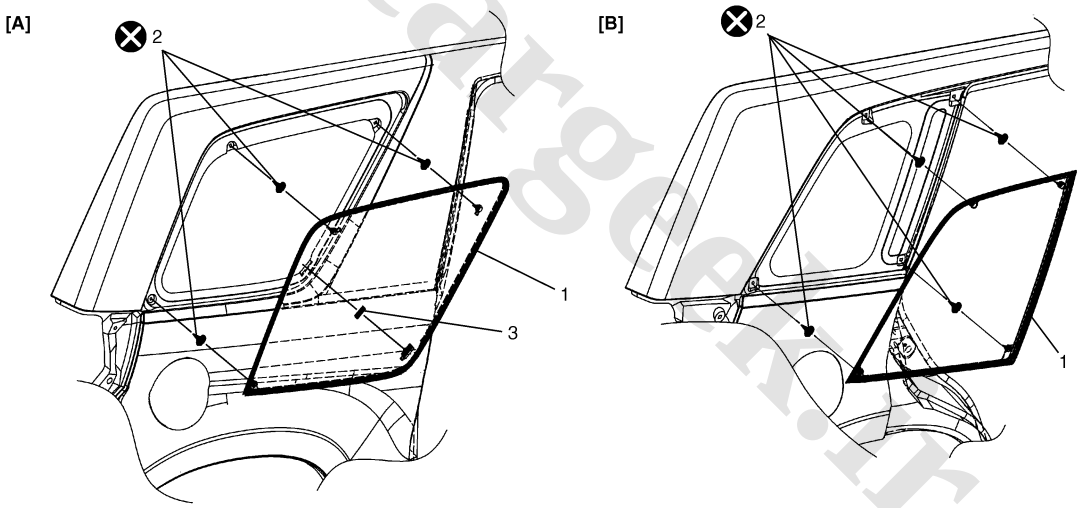


I5JB0A950002-01

| | | |
|---|---|---|
| [A]: 3 door model | 1. Rear quarter window glass | 3. Fastener |
| [B]: 5 door model | 2. Rear quarter window glass clip | ⊗ : Do not reuse. |

**⚠ CAUTION**

- **Described is the glass replacement by using 3 types of primers and 1 type of adhesive made by YOKOHAMA (one component urethane adhesive to be used with primer in combination). When using primer and adhesive made by other manufacturers, be sure to refer to handling instructions supplied with them. Negligence in following such procedure or misuse of the adhesive in any way hinders its inherent adhesive property. Therefore, before the work, make sure to read carefully the instruction and description given by the maker of the adhesive to be used and be sure to follow the procedure and observe each precaution throughout the work.**
- **Should coated surface be scratched or otherwise damaged, be sure to repair damaged part, or corrosion may start from there.**

www.cargeek.ir

www.CarGeek.ir

Use the specific adhesive which has the following property.

**Glass adhesive shearing strength**
**40 kg/cm$^2$ (569 lb/in$^2$) or more**

Adhesive materials and tools required for removal and installation.

- One component urethane adhesive and primers used in combination (For one sheet of rear quarter window).
  - Adhesive (470 g (15.7 oz.))
  - Primer for glass (30 g (1.0 oz.))
  - Primer for body (30 g (1.0 oz.))
  - Primer for molding (30 g (1.0 oz.))
- Eyeleteer
- Piano string
- Windshield knife
- Brush for primer application (2 pcs)
- Knife
- Rubber sucker grip
- Sealant gun (for filling adhesive)
- Putty spatula (for correcting adhered parts)

# Diagnostic Information and Procedures

## Rear End door Window Defogger Symptom Diagnosis

S5JB0A9504001

**NOTE**

- **Use of SUZUKI scan tool makes it easy to check whether a faulty condition is on the input side or output side of BCM. For checking procedure, refer to "Diagnosis Using Output Test Function of SUZUKI Scan Tool" under "Scan Tool Data: in Section 10B".**
- **Check each part in the order from the top of the following list.**

| Condition | Possible cause | Correction / Reference Item |
|---|---|---|
| ***Rear end door window defogger does not operate*** | Circuit fuse blown | *Replace fuse and check for short circuit.* |
| | Rear end door window defogger relay faulty | *Check rear end door window defogger relay referring to "Rear End Door Window Defogger Relay Inspection: ".* |
| | Defogger wire faulty | *Check defogger wire referring to "Rear End Door Window Defogger Wire Inspection: ".* |
| | Wiring or grounding faulty | *Repair circuit.* |
| | HVAC control module faulty | *Check HVAC control module referring to "HVAC Control Module and Its Circuits Inspection: in Section 7B".* |
| | BCM faulty | *Replace after making sure that none of above parts is faulty.* |

www.cargeek.ir

www.CarGeek.ir


## Power Window Control System Symptom Diagnosis

S5JB0A9504002

| Condition | Possible cause | Correction / Reference Item |
|---|---|---|
| ***All power windows do not operate*** | Circuit fuse blown | *Replace fuse and check for short circuit.* |
| | Power window main switch faulty | *Check power window main switch referring to "Power Window Main Switch Inspection: ".* |
| | Ignition switch faulty | *Check ignition switch referring to "Ignition Switch Inspection: in Section 9C".* |
| | Wiring or grounding faulty | *Repair circuit.* |
| ***Only one power window does not operate*** | Power window main switch faulty | *Check power window main switch referring to "Power Window Main Switch Inspection: ".* |
| | Power window sub switch faulty | *Check power window sub switch referring to "Power Window Sub Switch Inspection: ".* |
| | Wiring and/or coupler faulty | *Check wiring and/or coupler.* |
| | Power window regulator faulty | *Check window regulator.* |
| | Power window motor faulty | *Check power window motor.* |
| | Wiring or grounding faulty | *Repair circuit.* |

## Power Door Mirror Control System Symptom Diagnosis (If Equipped)

S5JB0A9504003

| Condition | Possible cause | Correction / Reference Item |
|---|---|---|
| ***All power mirrors do not operate*** | Circuit fuse blown | *Replace fuse and check for short circuit.* |
| | Power door mirror switch faulty | *Check power door mirror switch referring to "Power Door Mirror Switch Inspection (If Equipped): ".* |
| | Wiring or grounding faulty | *Repair circuit.* |
| ***One power mirror does not operate*** | Power door mirror switch faulty | *Check power door mirror switch referring to "Power Door Mirror Switch Inspection (If Equipped): ".* |
| | Power door mirror actuator faulty | *Check actuator refraining to "Power Door Mirror Actuator Inspection (If Equipped): ".* |
| | Wiring or grounding faulty | *Repair circuit.* |

## Door Mirror Heater Symptom Diagnosis (If Equipped)

S5JB0A9504005

**NOTE**

- **Use of SUZUKI scan tool makes it easy to check whether a faulty condition is on the input side or output side of BCM. For checking procedure, refer to "Diagnosis Using Output Test Function of SUZUKI Scan Tool" under "Scan Tool Data: in Section 10B".**
- **Check each part in the order from the top of the following list.**

| Condition | Possible cause | Correction / Reference Item |
|---|---|---|
| ***All door mirror heaters does not operate*** | Circuit fuse blown | *Replace fuse and check for short circuit.* |
| | Mirror heater relay faulty | *Check mirror heater relay referring to "Door Mirror Heater Relay Inspection (If Equipped): ".* |
| | Wiring or grounding faulty | *Repair circuit.* |
| | HVAC control module faulty | *Check HVAC control module referring to "HVAC Control Module and Its Circuits Inspection: in Section 7B".* |
| | BCM faulty | *Replace after making sure that none of above parts is faulty.* |
| ***Only one door mirror heater does not operate*** | Door mirror heater faulty | *Check door mirror heater referring to "Door Mirror Heater Inspection (If Equipped): ".* |
| | Wiring or grounding faulty | *Repair circuit.* |

www.cargeek.ir

www.CarGeek.ir

# Repair Instructions

## Windshield Removal and Installation

S5JB0A9506001

### Removal

1) Clean both inside and outside of glass and around it.
2) Remove wiper arms and cowl top garnish.
3) Remove windshield side garnish.
4) Using tape, cover body surface around glass to prevent any damage.
5) Remove rear view mirror, sun visor and front pillar trims (right & left).
6) If necessary, remove instrument panel. Refer to “Instrument Panel Removal and Installation: in Section 9C”.
7) If necessary, remove head lining. Refer to “Head Lining Removal and Installation: in Section 9H”.
8) Remove (or cut) windshield molding.
9) Drill hole with eyeleteer (1) through adhesive and let piano string through it.

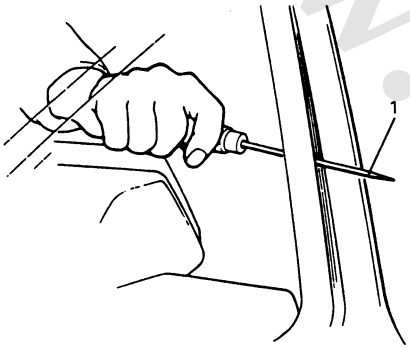


I2RH01950040-01

10) Cut adhesive all around windshield (1) with piano string (2). When using tool, windshield knife (3), to cut adhesive, be careful not to cause damage to windshield. Use wire to cut adhesive along lower part of windshield.

**NOTE**

**Use piano string (2) as close to glass as possible so as to prevent damage to body and instrument panel.**

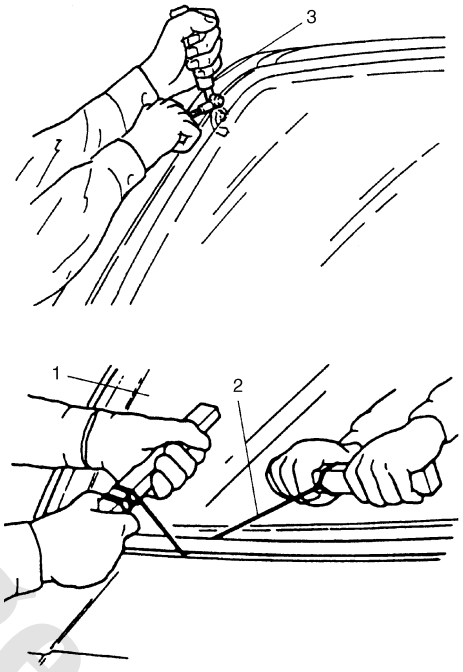


I3RH0A950006-01

11) Using knife (1), smoothen adhesive (2) remaining on body side (3) so that it is 1 – 2 mm (0.039 – 0.078 in.) thick all around.

**NOTE**

**Before using knife (1), clean it with alcohol or the like to remove oil from it.**

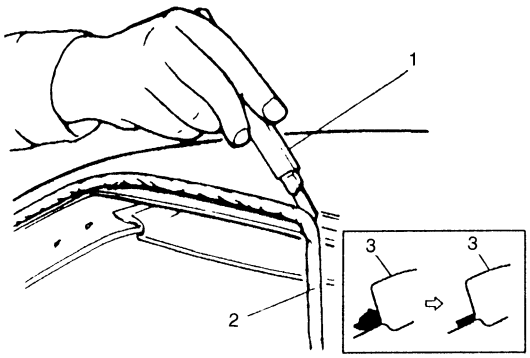


I2RH01950042-01

www.cargeek.ir

www.CarGeek.ir


12) When reusing windshield, remove the adhesive (1) from it, using care not to damage primer coated surface (2).

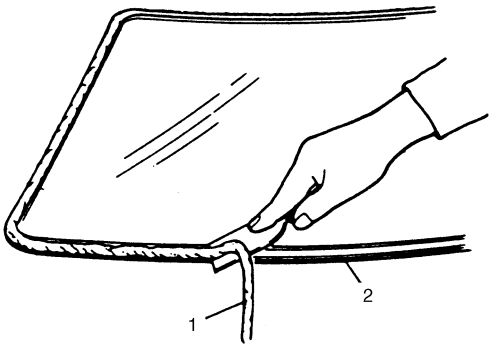


I2RH01950043-01

### Installation

1) Using cleaning solvent, clean windshield edge where windshield glass is to be adhered. (Let it dry for more than 10 minutes.)
2) To determine installing position of glass (1) to body (2), position glass against body so that clearance between upper end of glass (1) and body (2) is approximately 5.5 mm (0.217 in.) and clearances between each side end (right & left) of glass (1) and body (2) are even. Then mark mating marks on glass (1) and body (2) as shown. Upper clearance can be adjusted by moving glass stoppers position.

**Windshield clearance**
**"a": approx. 5.5 mm (0.217 in.)**

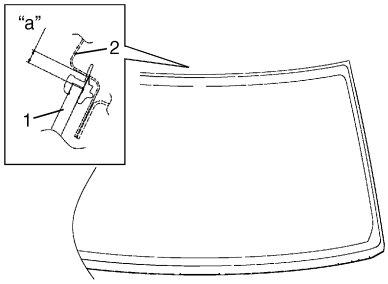


I5JB0A950003-01

3) Clean contact surfaces of old adhesive (4), paint or bare metal thoroughly.
If surfaces of paint or bare metal come out, apply primer (2) for body with caution not to apply primer (2) to surface of adhesive remaining on body.

**NOTE**

- **Be sure to refer to primer maker's instruction for proper handling and drying time.**
- **Do not touch body and old adhesive surfaces where glass is to be adhered.**

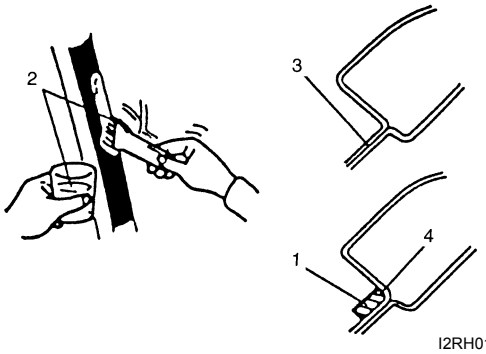


I2RH01950046-01

| | |
|---|---|
| 1. | Do not apply primer |
| 3. | Apply primer |

4) Install new molding to glass.
5) Clean glass surface to be adhered to body with clean cloth. If cleaning solvent is used, let it dry for 10 minutes or more.

**Cleaning Area for windshield (distance from the edge of glass or molding)**
**30 – 50 mm (1.18 – 1.97 in.)**

6) Install new fastener (1) to windshield (2).

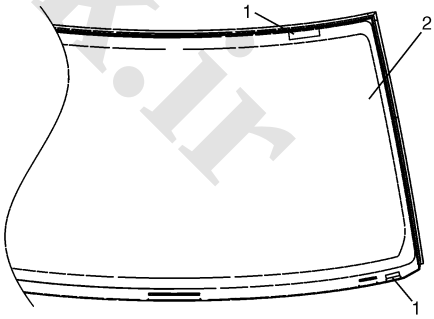


I5JB0A950004-02

www.cargeek.ir

www.CarGeek.ir

7) Using new brush, apply sufficient amount of primer onto glass along glass edge.

**NOTE**

- **Be sure to refer to maker's instruction for proper handling and drying time.**
- **Do not apply primer on outside of ceramic coated surface.**
- **Do not touch primer coated surface.**

**Width applied primer for windshield**
**"a": 15 mm (0.59 in.)**
**"b": 20 mm (0.79 in.)**

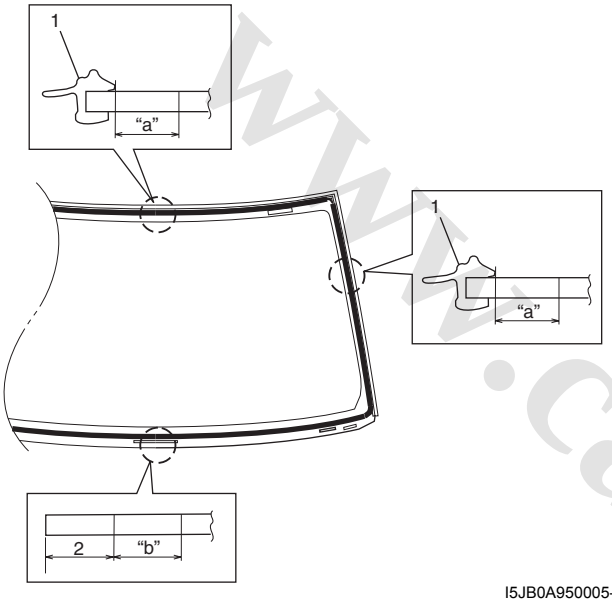


I5JB0A950005-01

| | |
|---|---|
| 1. | Molding |
| 2. | 21.4 mm (0.84 in.) |

8) Apply primer for molding along molding surface all around.
9) Apply adhesive (1) referring to figure.

**NOTE**

- **Press glass (2) against fittings surface of body panel quickly after adhesive (1) is applied.**
- **Use of rubber sucker grip is helpful to hold and carry glass after adhesive (1) is applied.**
- **Perform steps 8) to 9) within 10 min. to ensure sufficient adhesion.**
- **Be sure to refer to adhesive maker's instruction for proper handling and drying time.**
- **Start from bottom side of glass (2).**
- **Be careful not to damage primer.**

**Adhesive amount specifications and position for windshield**
**Width "a": Approx. 7 mm (0.27 in.)**
**Height "b": Approx. 15 mm (0.59 in.)**
**Position "c": Approx. 4 mm (0.15 in.)**
**Position "d": Approx. 35 mm (1.38 in.) for bottom section**

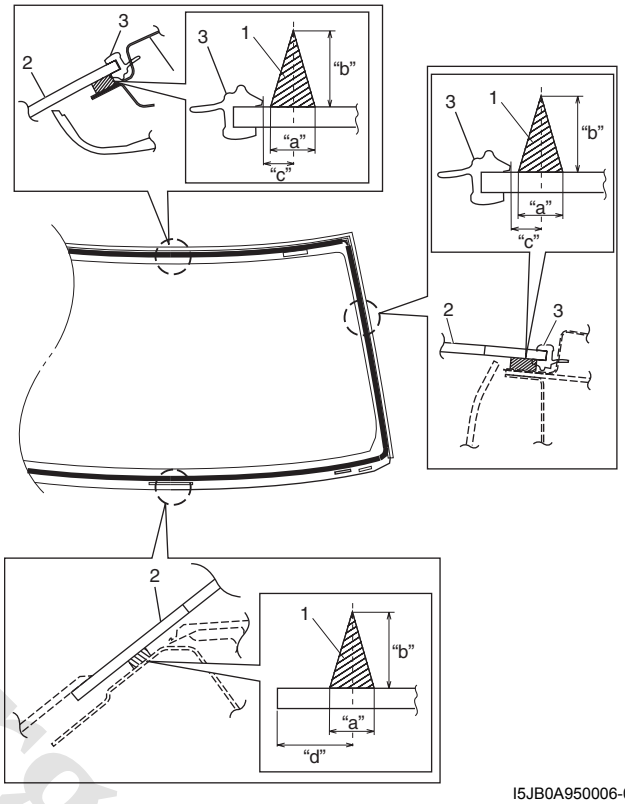


I5JB0A950006-02

| | |
|---|---|
| 3. | Molding |

10) Holding rubber sucker grips (1), place glass onto body.

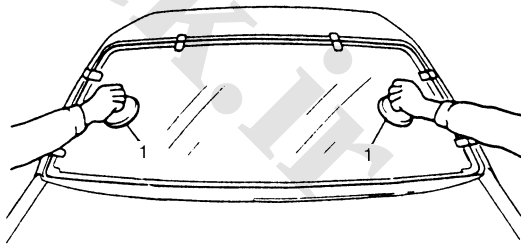


I2RH01950050-01

www.cargeek.ir

www.CarGeek.ir


11) Check for water leakage by pouring water over windshield through hose. If leakage is found, dry windshield and fill leaky point with adhesive. If water still leaks even after that, remove glass and start installation procedure all over again.

**NOTE**

- **Do not use high pressure water.**
- **Do not blow compressed air directly at adhesive applied part when drying.**
- **Do not use infrared lamp or like for drying.**

I2RH01950051-01

**⚠ CAUTION**

**Upon completion of installation, note the following.**

- **Sudden closing of door before adhesive is completely set may cause glass to become loose or to come off. Therefore, if door is opened or closed before adhesive is completely set, make sure to open all door glasses and use proper care.**
- **If molding is not securely in place, hold it down with a tape until adhesive is completely set.**
- **Each adhesive has its own setting time.**
- **Be sure to refer to its maker's instruction, check setting time of adhesive to be used and observe precautions to be taken before adhesive is set.**
- **Refrain from driving till adhesive is completely set so as to ensure proper and sufficient adhesion.**

## Rear Quarter Window Removal and Installation

S5JB0A9506023

### Removal

1) Clean both inside and outside of glass and around it.
2) Using tape, cover body surface around glass to prevent any damage.
3) If necessary, remove instrument panel. Refer to "Instrument Panel Removal and Installation: in Section 9C".
4) If necessary, remove quarter under trim, center pillar inner upper trim, rear pillar trim and head lining. Refer to "Head Lining Removal and Installation: in Section 9H".
5) Drill hole with eyeleteer (1) through adhesive and let piano string through it.

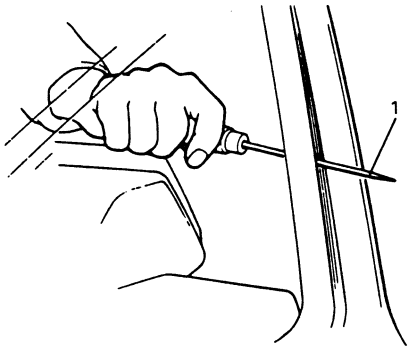


I2RH01950040-01

www.cargeek.ir

www.CarGeek.ir

6) Cut adhesive all around rear quarter window (1) with piano string (2). When using tool, windshield knife (3), to cut adhesive, be careful not to cause damage to windshield. Use wire to cut adhesive along lower part of windshield.

**NOTE**

**Use piano string (2) as close to glass as possible so as to prevent damage to body.**

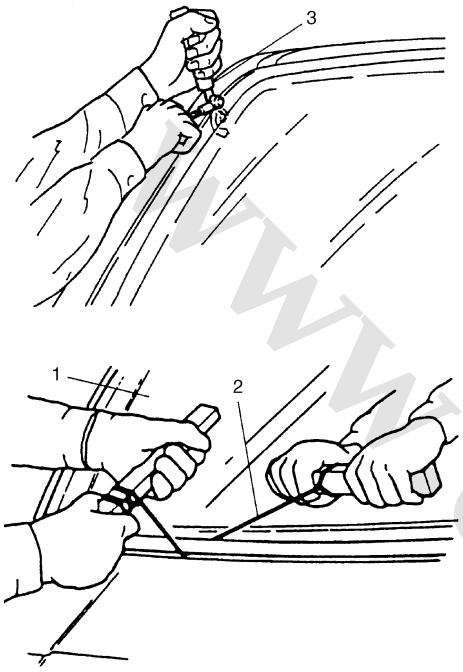


I3RH0A950006-01

7) Using knife (1), smoothen adhesive (2) remaining on body side (3) so that it is 1 – 2 mm (0.039 – 0.078 in.) thick all around.

**NOTE**

**Before using knife (1), clean it with alcohol or the like to remove oil from it.**

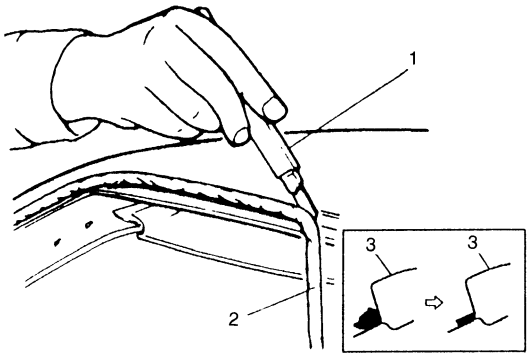


I2RH01950042-01

8) When reusing rear quarter window, remove the adhesive (1) from it, using care not to damage primer coated surface (2).

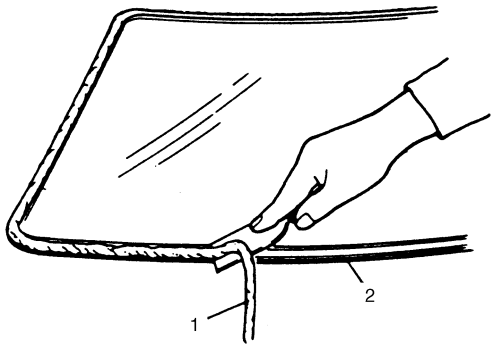


I2RH01950043-01

**Installation**

1) Using cleaning solvent, clean rear quarter window edge where rear quarter window glass is to be adhered. (Let it dry for more than 10 minutes.)
2) Clean contact surfaces of old adhesive (4), paint or bare metal thoroughly.
   If surfaces of paint or bare metal come out, apply primer (2) for body with caution not to apply primer (2) to surface of adhesive remaining on body.

**NOTE**

- **Be sure to refer to primer maker's instruction for proper handling and drying time.**
- **Do not touch body and old adhesive surfaces where glass is to be adhered.**

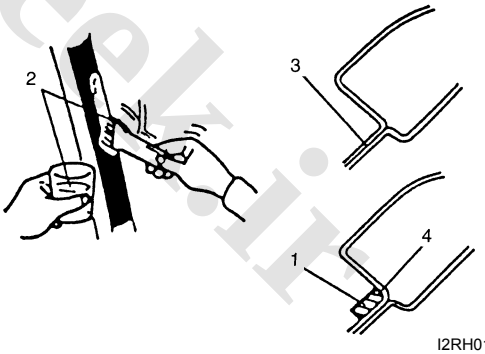


I2RH01950046-01

| | |
|---|---|
| 1. | Do not apply primer |
| 3. | Apply primer |

www.cargeek.ir

3) Clean glass surface to be adhered to body with clean cloth. If cleaning solvent is used, let it dry for 10 minutes or more.

**Cleaning Area for rear quarter window (distance from the edge of glass or molding)**
**30 – 50 mm (1.18 – 1.97 in.)**

4) Using new brush, apply sufficient amount of primer onto glass along glass edge.

**NOTE**

- **Be sure to refer to maker's instruction for proper handling and drying time.**
- **Do not apply primer on outside of ceramic coated surface.**
- **Do not touch primer coated surface.**

**Width applied primer for rear quarter window**
**"a": 14 mm (0.55 in.)**

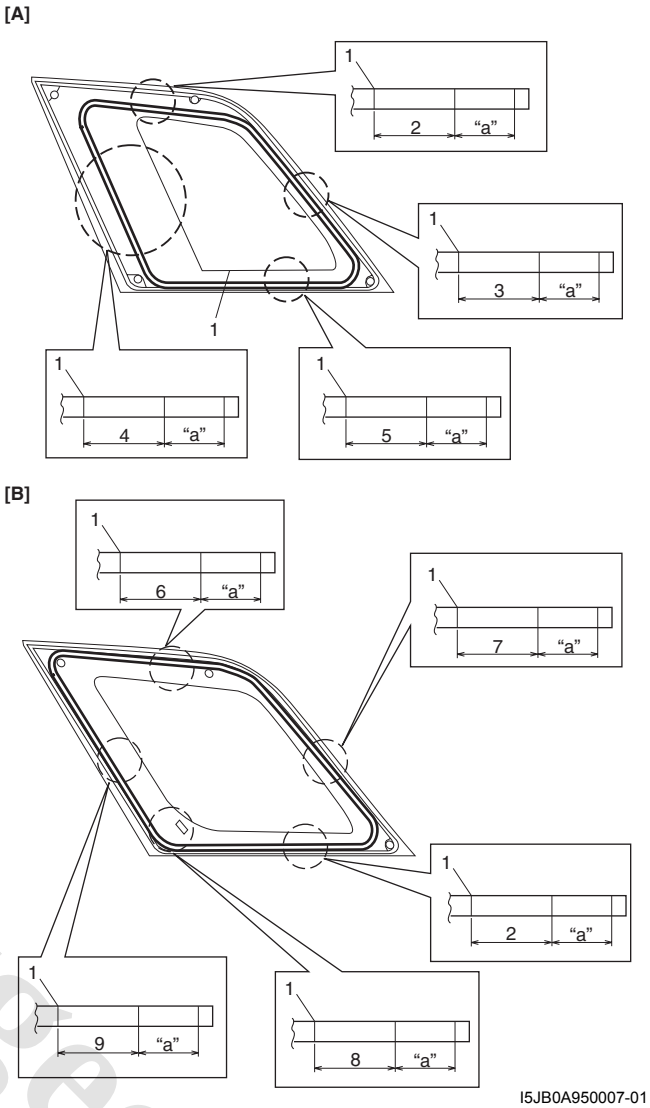


I5JB0A950007-01

| | |
|---|---|
| [A]: 5 door model | 5. 23 mm (0.91 in.) |
| [B]: 3 door model | 6. 35 mm (1.48 in.) |
| 1. Ceramic print line | 7. 20 mm (0.79 in.) |
| 2. 13 mm (0.51 in.) | 8. 29 mm (1.41 in.) |
| 3. 18 mm (0.71 in.) | 9. 19 mm (0.75 in.) |
| 4. 88 mm (3.46 in.) | |

www.cargeek.ir

www.CarGeek.ir

5) Apply primer for molding along molding surface all around.
6) Apply adhesive (1) referring to figure.

**NOTE**

- **Press glass (2) against fittings surface of body panel quickly after adhesive (1) is applied.**
- **Use of rubber sucker grip is helpful to hold and carry glass after adhesive (1) is applied.**
- **Perform steps 4) to 5) within 10 min. to ensure sufficient adhesion.**
- **Be sure to refer to adhesive maker's instruction for proper handling and drying time.**
- **Start from bottom side of glass (2).**
- **Be careful not to damage primer.**

**Adhesive amount specifications and position for rear quarter window**
**Width "a": Approx. 7 mm (0.28 in.)**
**Height "b": Approx. 15 mm (0.59 in.)**
**Position "c": Approx. 20 mm (0.79 in.)**
**Position "d": Approx. 25 mm (0.98 in.)**
**Position "e": Approx. 30 mm (1.20 in.)**
**Position "f": Approx. 95 mm (3.75 in.)**
**Position "g": Approx. 42 mm (1.65 in.)**
**Position "h": Approx. 27 mm (1.06 in.)**
**Position "i": Approx. 36 mm (1.42 in.)**
**Position "j": Approx. 26 mm (1.02 in.)**

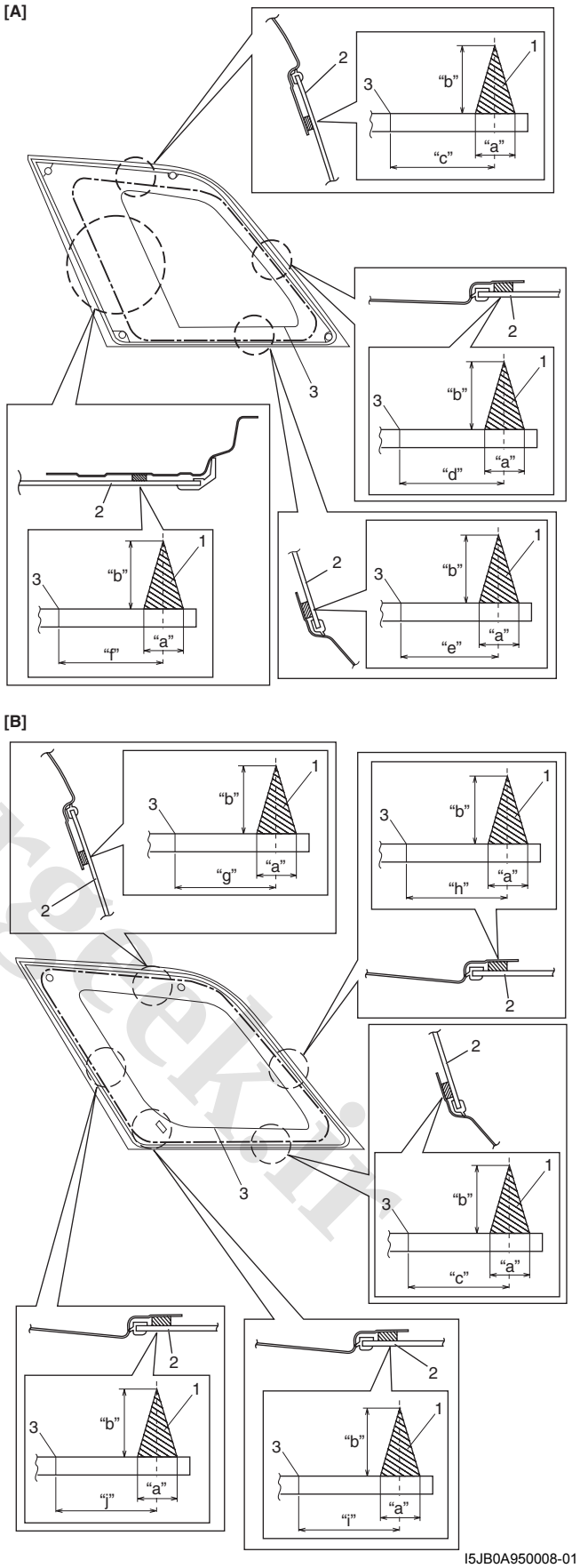


I5JB0A950008-01

| | |
|---|---|
| [A]: 5 door model | 3. Ceramic print line |
| [B]: 3 door model | |

www.cargeek.ir

www.CarGeek.ir


7) Holding rubber sucker grip (1), place glass onto body by aligning mating marks marked in step 3) and press it.

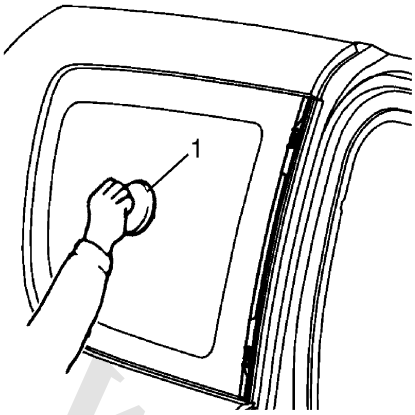


I4RS0B950004-01

8) Check for water leakage by pouring water over windshield through hose. If leakage is found, dry windshield and fill leaky point with adhesive. If water still leaks even after that, remove glass and start installation procedure all over again.

**NOTE**

- **Do not use high pressure water.**
- **Do not blow compressed air directly at adhesive applied part when drying.**
- **Do not use infrared lamp or like for drying.**

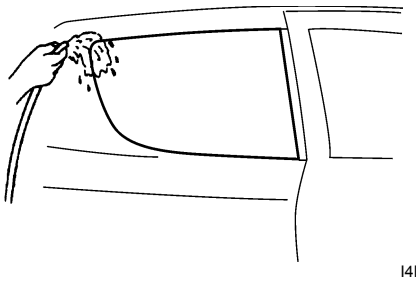

I4RS0B950005-01

**⚠ CAUTION**

**Upon completion of installation, note the following.**

- **Sudden closing of door before adhesive is completely set may cause glass to become loose or to come off. Therefore, if door is opened or closed before adhesive is completely set, make sure to open all door glasses and use proper care.**
- **If molding is not securely in place, hold it down with a tape until adhesive is completely set.**
- **Each adhesive has its own setting time.**
- **Be sure to refer to its maker's instruction, check setting time of adhesive to be used and observe precautions to be taken before adhesive is set.**
- **Refrain from driving till adhesive is completely set so as to ensure proper and sufficient adhesion.**

www.cargeek.ir

www.CarGeek.ir

## Front Door Window Components

S5JB0A9506002

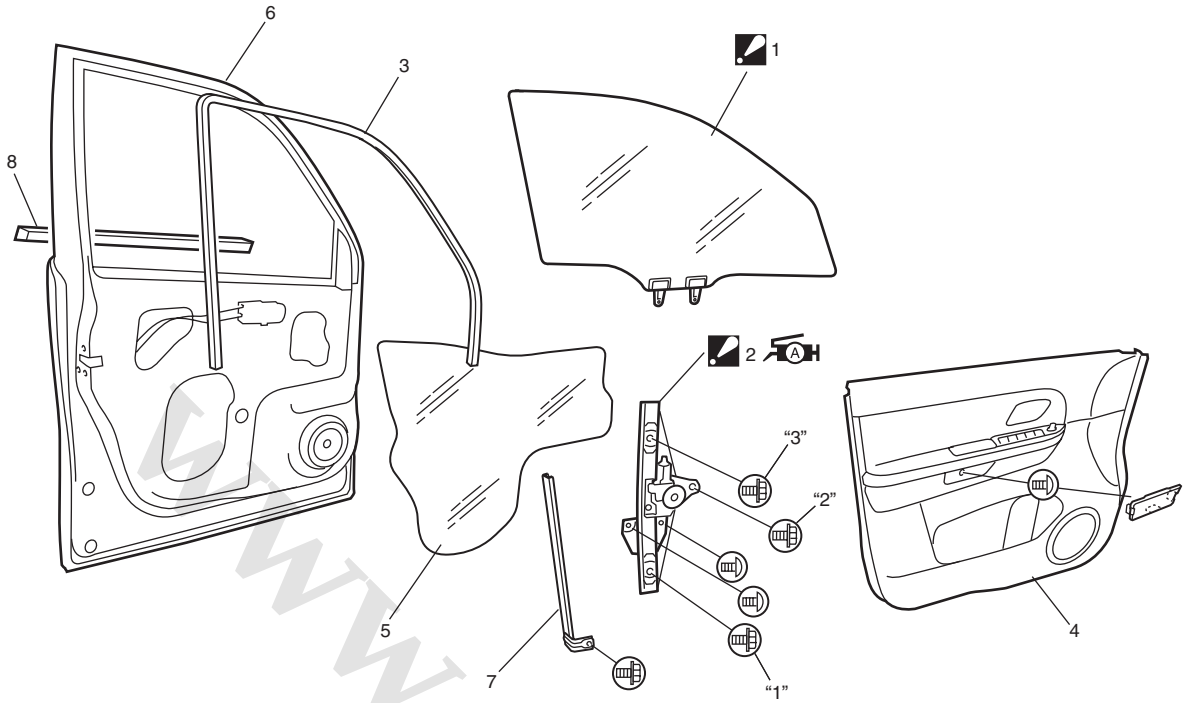


I5JB0A950009-01

| | | |
|---|---|---|
| 1. Door glass<br>: Tightening order rear to front. | 4. Door trim | 7. Front door sash |
| 2. Window regulator assembly<br>: Apply lithium grease 99000-25010 to sliding part.<br>: Tightening order "1" → "2" → "3". | 5. Door sealing cover | 8. Front door outer weather-strip |
| 3. Glass run | 6. Door panel | |

www.cargeek.ir

www.CarGeek.ir


## Front Door Glass Removal and Installation

S5JB0A9506003

### Removal

1) Remove door mirror trim (1), front door inner garnish (2) (3 door model only) and door trim screw cover (3).
2) Remove door trim screw (5).
3) Remove door trim (4) as shown.
   And disconnect power window switch lead wire and door illumination lamp lead wire at coupler.

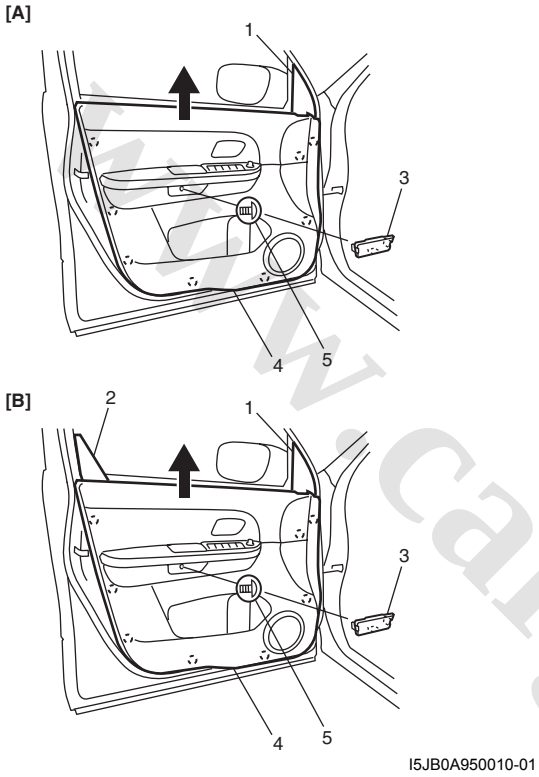


I5JB0A950010-01

| [A]: 5 door model | [B]: 3 door model |
|---|---|

4) Remove door sealing cover (1).

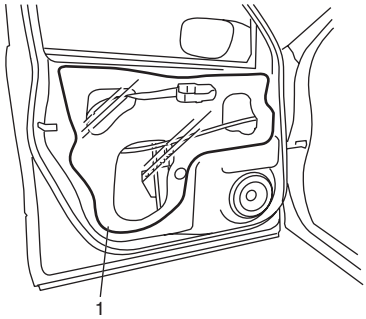


I5JB0A950011-01

5) Remove door glass mounting screws (1).
6) Remove door glass (2) while tilting it as shown.

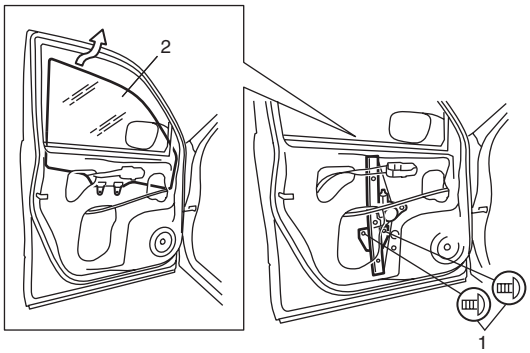


I5JB0A950012-01

### Installation

Reverse removal procedure noting the following instructions.

- If there is deformity for glass run, replace it with a new one.
- Tighten door glass rear mounting screw (1) first, and then tighten door glass front mounting screw (2).

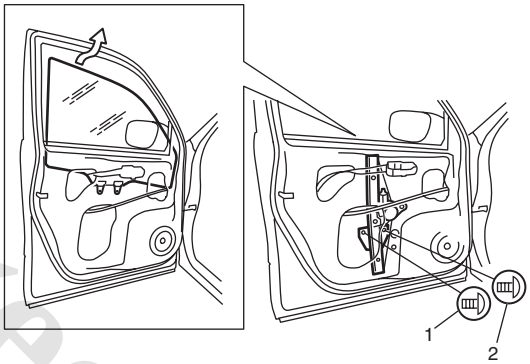


I5JB0A950013-01

- Secure door sealing cover (1) with adhesive (2).

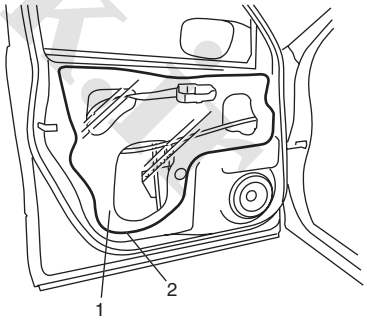


I5JB0A950014-01

www.cargeek.ir

www.CarGeek.ir

- Install front door trim.

**Front door trim attaching order**
**(1) → (2) → (3) → (4) → (5) → (6) → (7) → (8)**

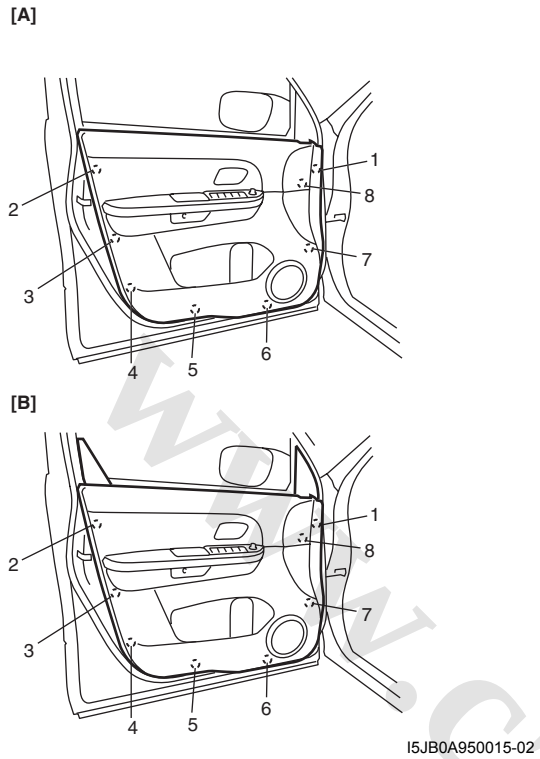

I5JB0A950015-02

| | |
|---|---|
| [A]: 5 door model | [B]: 3 door model |

## Front Door Window Regulator Removal and Installation

S5JB0A9506004

### Removal

1) Remove door glass referring to “Front Door Glass Removal and Installation: ”.
2) Disconnect power window motor lead wire at coupler.
3) Remove regulator mounting screws (1), and then remove front door window regulator (2).

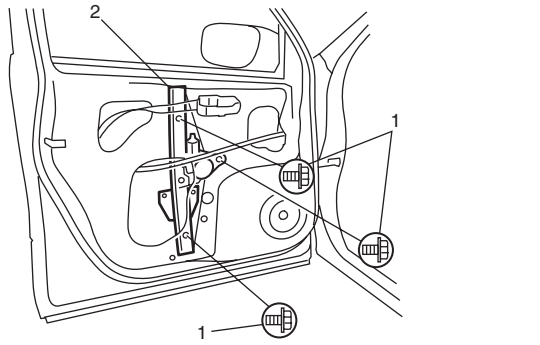

I5JB0A950016-01

### Installation

Reverse removal procedure noting the following instruction.

- Apply grease to sliding portions of window regulator.

  **: Grease 99000–25010**

- Tighten front door window regulator attaching screws.

**Front door window regulator screw tightening order**
**(a) → (b) → (c)**

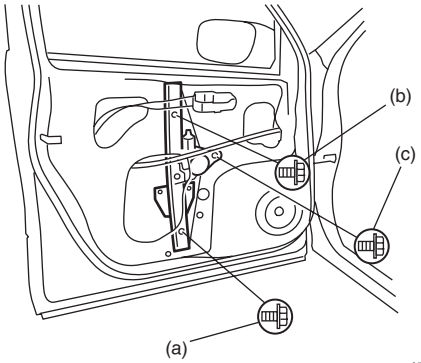

I5JB0A950017-01

## Front Door Window Regulator Inspection

S5JB0A9506005

Check the following parts for wear, damage, smooth operation and lubrication:

- Check regulator sliding and rotating parts.
- Check rollers.

www.cargeek.ir

www.CarGeek.ir


## Rear Door Window Components

S5JB0A9506006

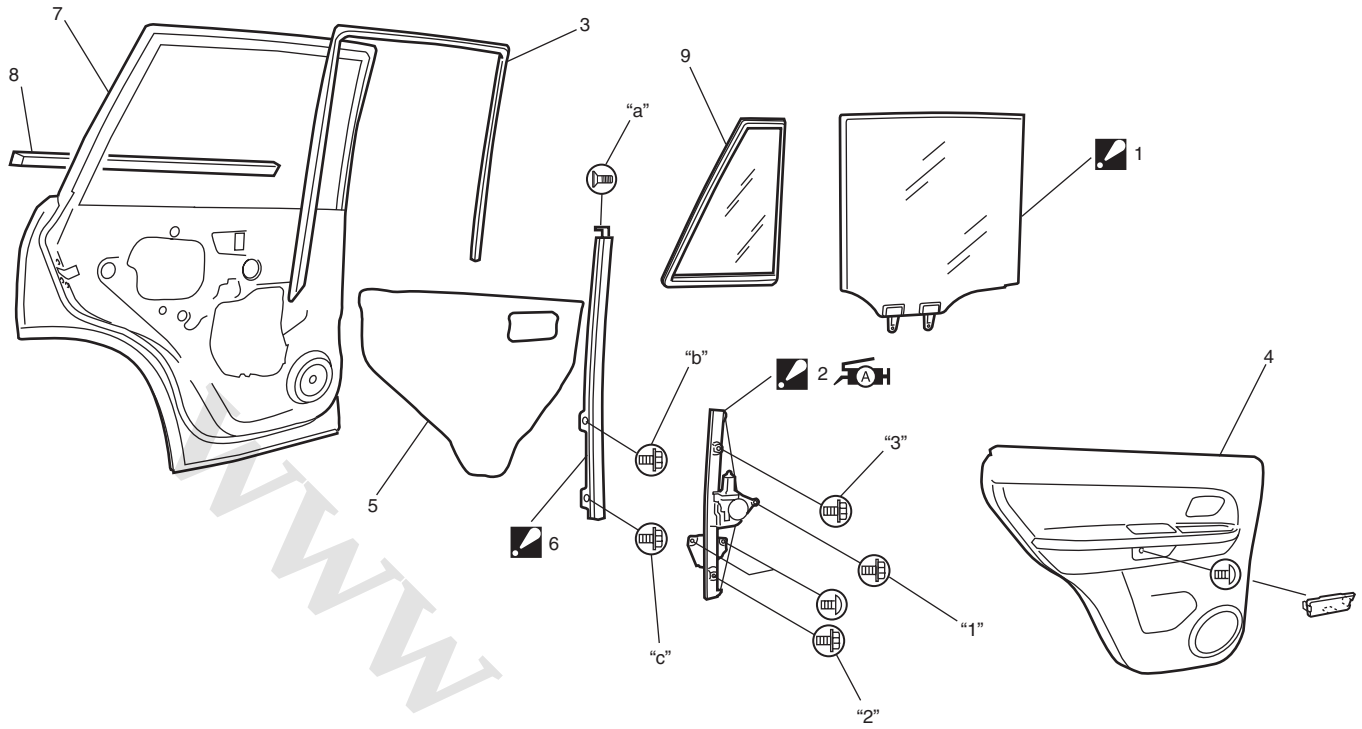


I5JB0A950018-01

| | | |
|---|---|---|
| 1. Door glass<br>: Tightening order rear to front. | 4. Door trim | 7. Door panel |
| 2. Window regulator assembly<br>: Apply lithium grease 99000-25010 to sliding part.<br>: Tightening order "1" → "2" → "3". | 5. Door sealing cover | 8. Rear door outer weather-strip |
| 3. Glass run | 6. Door sash<br>: Tightening order "a" → "b" → "c". | 9. Rear door partition glass. |

## Rear Door Glass Removal and Installation

S5JB0A9506007

### Removal

1) Remove door trim screw cover (1).
2) Remove door trim screw (2).

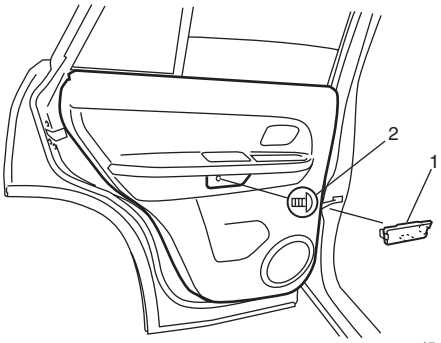


I5JB0A950019-01

3) Remove door trim (1) as shown.

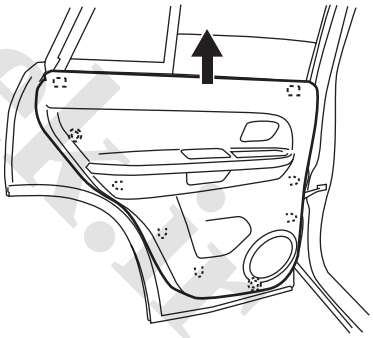

I5JB0A950020-01

4) Remove door sealing cover (1).

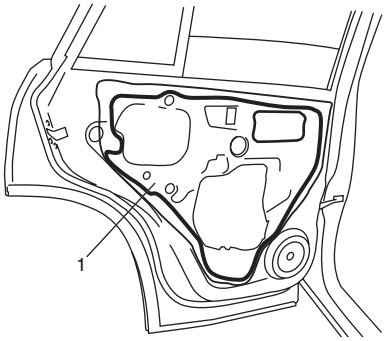


I5JB0A950021-01

www.cargeek.ir

www.CarGeek.ir

5) Detach rear part of glass run from door sash (1), and remove door sash (1).
6) Remove door glass (2) as shown.

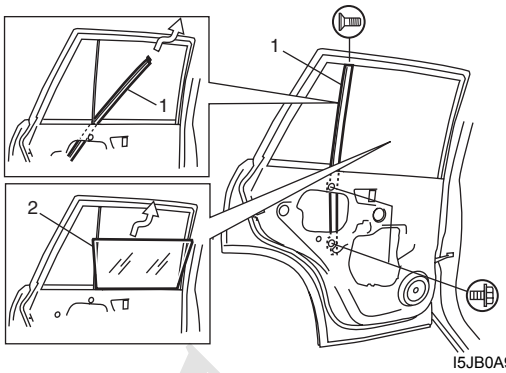

I5JB0A950022-01

**Installation**

Reverse removal procedure noting the following instructions.

- If there is deformity for glass run, replace it with a new one.
- Tighten rear door window mounting screw (a) first and then (b).

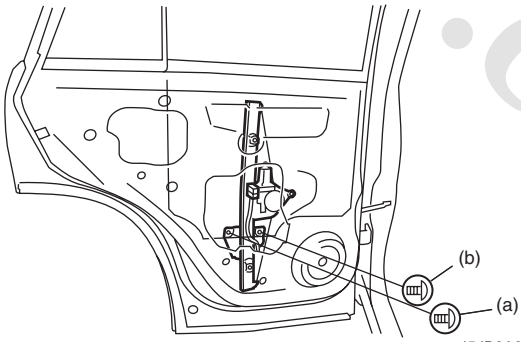

I5JB0A950023-01

- Tighten door sash mounting screw and bolts in order of (a), (b) and (c).

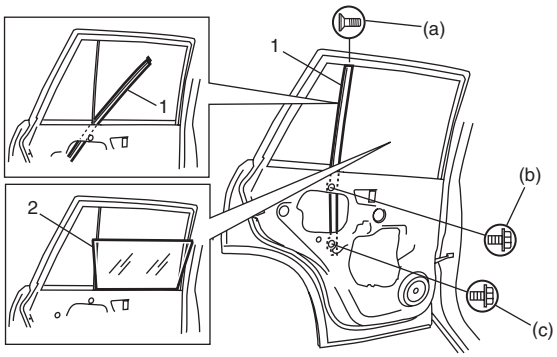

I5JB0A950024-02

- Secure door sealing cover (1) with adhesive (2).

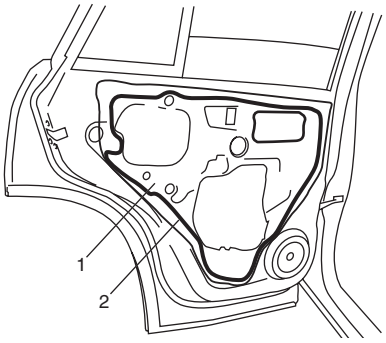

I5JB0A950025-01

- Install rear door trim.

**Rear door trim attaching order**

**(1) → (2) → (3) → (4) → (5) → (6) → (7)**

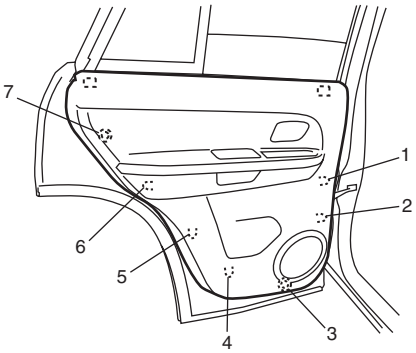

I5JB0A950026-01

## Rear Door Window Regulator Removal and Installation

S5JB0A9506008

**Removal**

1) Remove door glass referring to “Rear Door Glass Removal and Installation: ”.
2) Disconnect power window motor lead wire at coupler and loosen clamp.
3) Loosen regulator mounting screws (1), and then remove rear window regulator (2).

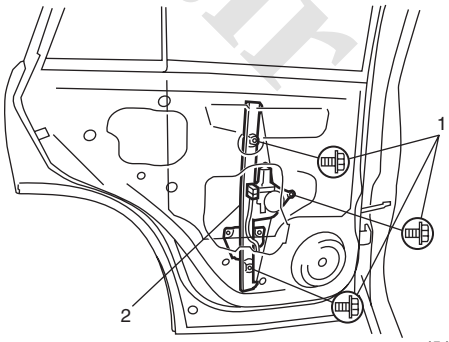

I5JB0A950027-01

www.cargeek.ir

www.CarGeek.ir


### Installation

Reverse removal procedure noting the following.

- Apply grease to sliding and rotating portions of window regulator.

  **: Grease 99000–25010**

- Tighten rear door window regulator mounting screw (1) first and then (2).
- Tighten rear door window mounting screws in order of (a), (b) and (c).

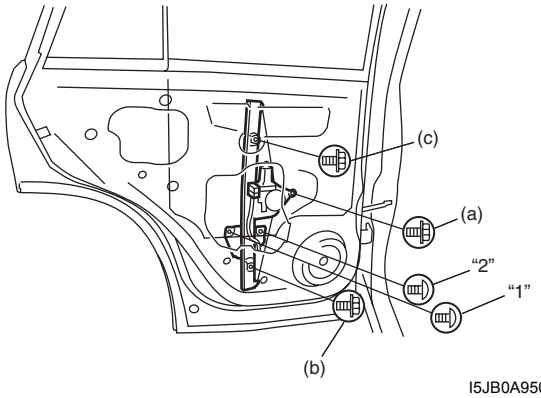


I5JB0A950028-01

## Rear Door Window Regulator Inspection

S5JB0A9506009

Check the following point:

- Check regulator sliding and rotating parts.
- Check rollers for wear and damage.

## Rear End Door Window Components

S5JB0A9506010

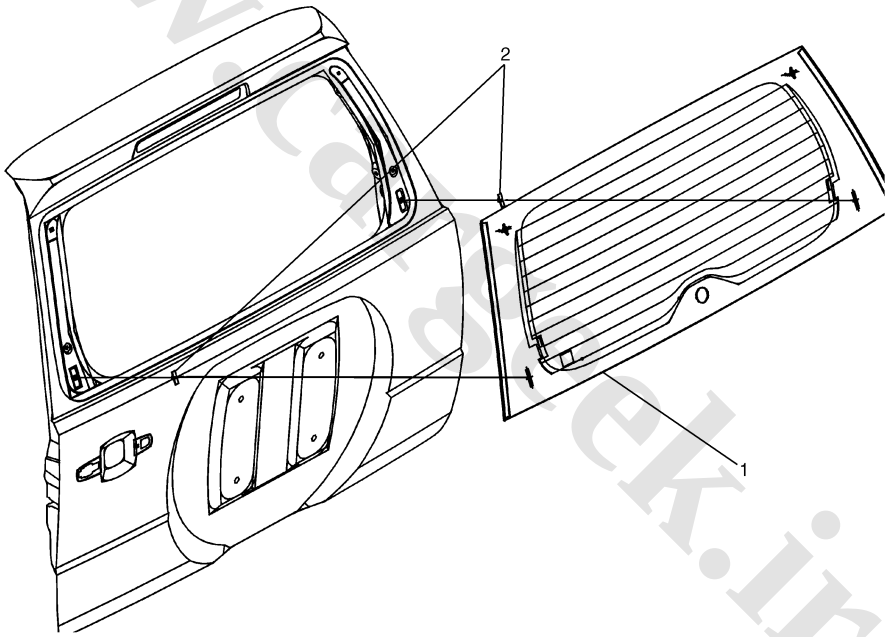


I5JB0A950029-01

| | |
|---|---|
| 1. Rear end door glass | 2. Fastener |

www.cargeek.ir

www.CarGeek.ir

## Rear End Door Glass Removal and Installation

S5JB0A9506011

Refer to “Windshield Removal and Installation: ” as removal and installation procedures are basically the same. However, note the following.

- Observe the following precautions when applying adhesive (1) along glass (2) edge.
- Adhesive (1) should be applied evenly especially in height.
- Be careful not to damage primer (3).
- With the position of fastener (4) properly aligned, install glass (2) on rear end door panel (5).
- Press glass against body quickly after adhesive (1) is applied.

**Adhesive amount specifications and position for rear end door glass**

**Height “a”: 14 mm (0.55 in.)**
**Width “b”: 7 mm (0.28 in.)**
**Width “c”: 16 mm (0.63 in.)**
**Position “d”: 15 mm (0.59 in.) for glass upper and bottom section**
**Position “e”: 8 mm (0.31 in.)**

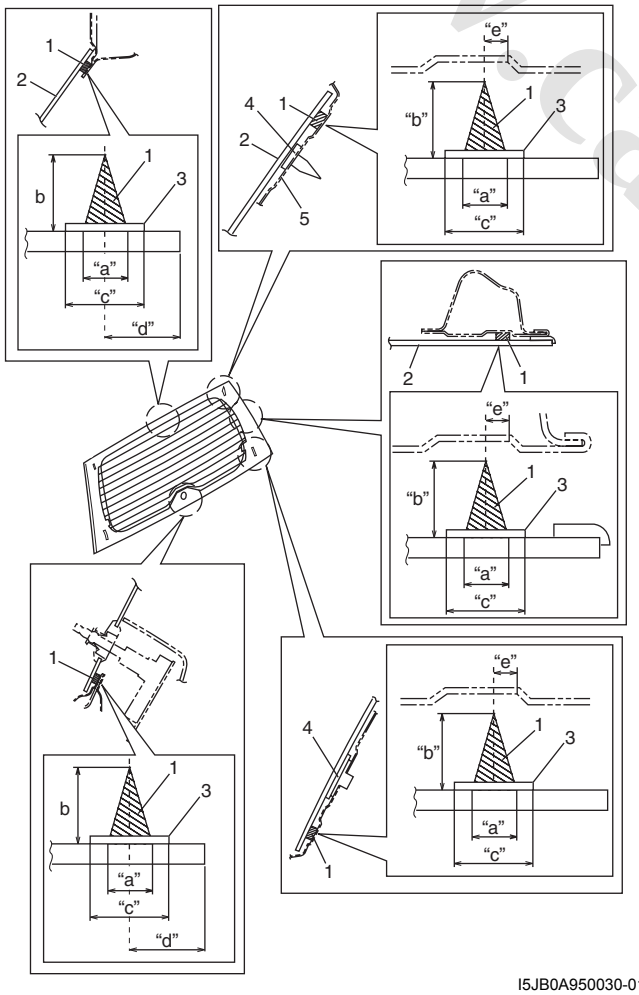


I5JB0A950030-01

## Rear End Door Window Defogger Relay Inspection

S5JB0A9506013

1) Disconnect negative (–) cable from battery.
2) Remove rear end door window defogger relay (included in integration relay) (1) from main fuse box (2).

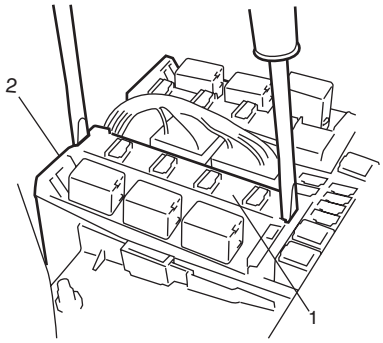


I5JB0A950031-01

3) Check that there is no continuity between terminal “a” and “b”. If there is continuity, replace relay.
4) Check that there is continuity between terminals “a” and “b” when a 12 V battery is connected to terminals “a” and “c”.
   If malfunction is found, replace it with a new one.

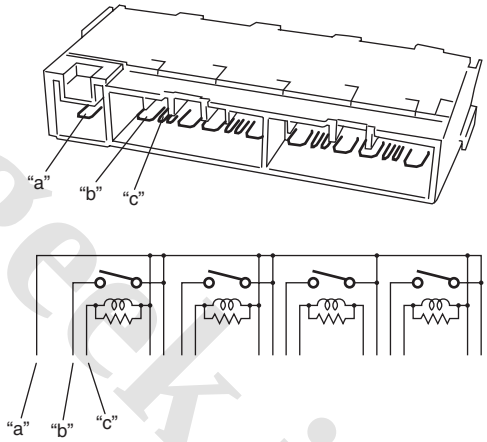


I5JB0A950032-02

www.cargeek.ir

www.CarGeek.ir


## Rear End Door Window Defogger Wire Inspection

S5JB0A9506014

**NOTE**

- **When cleaning rear end door window glass, use a dry cloth to wipe it along heat wire (1) direction.**
- **When cleaning glass, do not use detergent or abrasive-containing glass cleaner.**
- **When measuring wire voltage, use a tester with positive probe (2) wrapped with a tin foil (3) which should be held down on wire by finger pressure.**

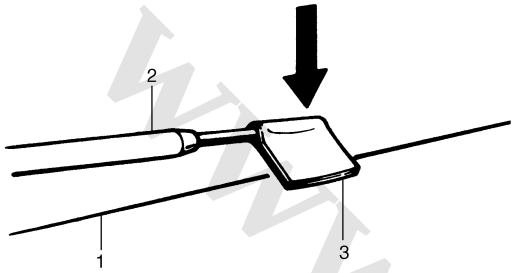


I2RH01950002-01

### Wire Damage Inspection

1) Start engine.
2) Turn on defogger switch.
3) Measure voltage at the center of each defogger wire (1), and check defogger wire condition according to the following table.
   If defogger wire open is found, go to next step.

**Defogger wire voltage**

| Voltage | Circuit |
|---|---|
| **10 – 12 V** | **Defogger wire open between its center and defogger wire power source terminal end (2)** |
| **4 – 6 V** | **Normal condition** |
| **0 – 1 V** | **Defogger wire open between its center and defogger wire ground terminal end (3)** |

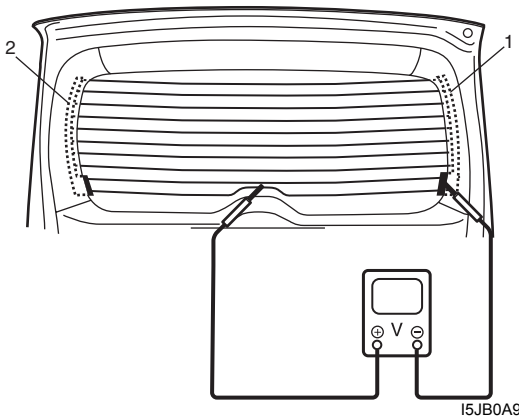


I5JB0A950033-01

4) Touch voltmeter negative (–) lead to defogger wire ground terminal end (1).
5) Touch voltmeter positive (+) lead with a foil strip to defogger wire power source terminal end (2), then move it along wire to defogger wire ground terminal end (1).
   The place where voltmeter fluctuates from 10 – 12 V to 0 – 1 V is where there is open.
   If found defective, repair defogger wire referring to “Rear End Door Window Defogger Wire Repair: ”.

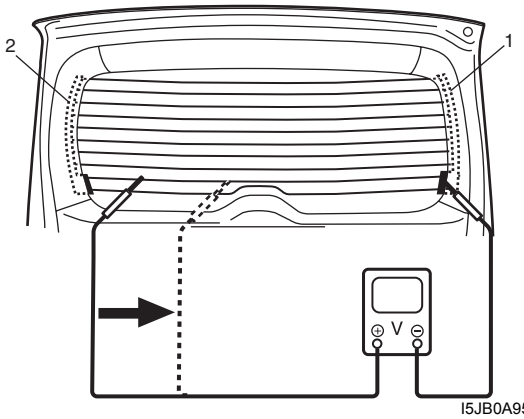


I5JB0A950034-01

## Rear End Door Window Defogger Wire Repair

S5JB0A9506015

1) Use white gasoline for cleaning.
2) Apply masking tape (1) at both upper and lower sides of heat wire (2) to be repaired.
3) Apply commercially-available repair agent (3) with a fine-tip brush (4).
4) 2 to 3 minutes later, remove masking tapes (1).

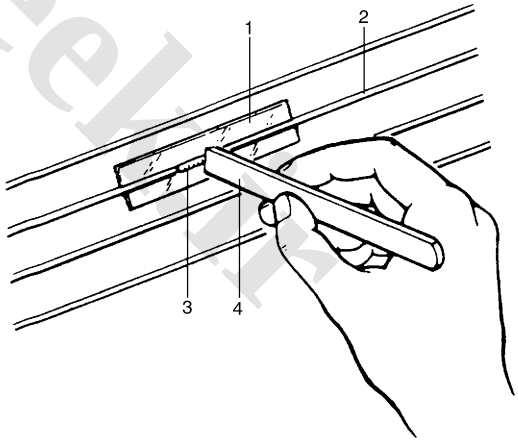


I2RH01950005-01

5) Leave repaired heat wire as it is for at least 24 hours before operating the defogger again.

## Power Window Main Switch Inspection

S5JB0A9506016

### Switch for driver side window

1) Remove driver side door trim referring to step 1) to 3) of “Front Door Glass Removal and Installation: ”.
2) Remove power window main switch from door trim.

www.cargeek.ir

www.CarGeek.ir

3) Connect 12 V battery positive (+) terminal to terminal “IG” of power window main switch and its negative (–) terminal to terminal “E” of power window main switch.
4) Check for continuity between terminals as shown below.
If check result is not as specified, replace power window main switch.

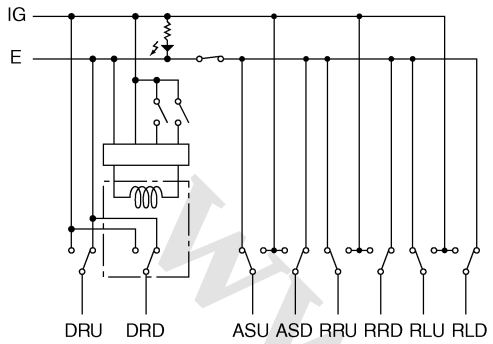


| Driver side window switch (1) | IG | DRU | DRD | E |
|---|---|---|---|---|
| UP | ○ | ○ | | |
| | | | ○ | ○ |
| OFF | | ○ | ○ | ○ |
| DOWN | ○ | | ○ | |
| | | ○ | | ○ |

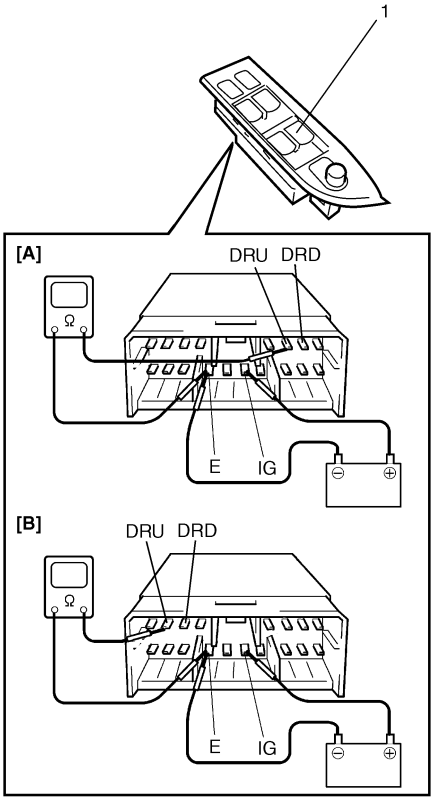


I5JB0A950035-03

| | |
|---|---|
| [A]: | LH steering vehicle |
| [B]: | RH steering vehicle |

**Switch for other window than driver side**

1) Remove driver side door trim referring to step 1) to 3) of “Front Door Glass Removal and Installation: ”.
2) Remove power window main switch from door trim.
3) Check for continuity between terminals as shown below.

If check result is not as specified, replace power window main switch.

| Passenger side window switch (1) | | IG | ASU | ASD | E |
|---|---|---|---|---|---|
| Rear right side window switch (2) | | IG | RRU | RRD | E |
| Rear left side window switch (3) | | IG | RLU | RLD | E |
| UNLOCK (4) | UP | ○ | ○ | | |
| | | | | ○ | ○ |
| | OFF | | ○ | ○ | ○ |
| | DOWN | ○ | | ○ | |
| | | | ○ | | ○ |
| LOCK (4) | UP | ○ | ○ | | |
| | OFF | | ○ | ○ | |
| | DOWN | ○ | | ○ | |

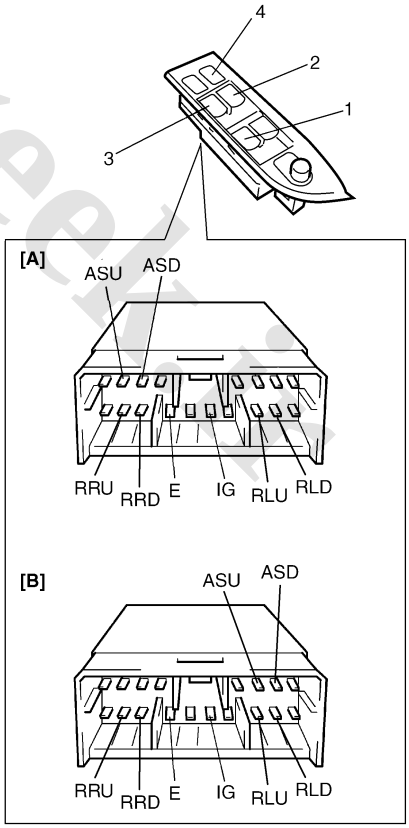


I5JB0A950036-02

| | |
|---|---|
| [A]: | LH steering vehicle |
| [B]: | RH steering vehicle |

www.cargeek.ir

www.CarGeek.ir


## Power Window Sub Switch Inspection

S5JB0A9506017

1) Remove front and/or rear door trim from door panel, refer to Step 1) to 3) of “Front Door Glass Removal and Installation: ” and/or “Rear Door Glass Removal and Installation: ”.
2) Remove power window sub switch from door trim.
3) Check for continuity between terminals at each switch condition.

If check result is not as specified, replace switch.

| Switch Position \ Terminal | A | B | C | D | E |
|---|---|---|---|---|---|
| UP | ○—○ | | ○ | | ○ |
| OFF | ○—○ | | | ○ | ○ |
| DOWN | | ○ | ○ | ○ | ○ |

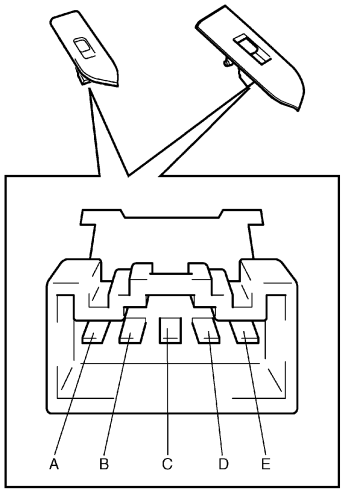


I5JB0A950037-01

## Door Mirror Components

S5JB0A9506018

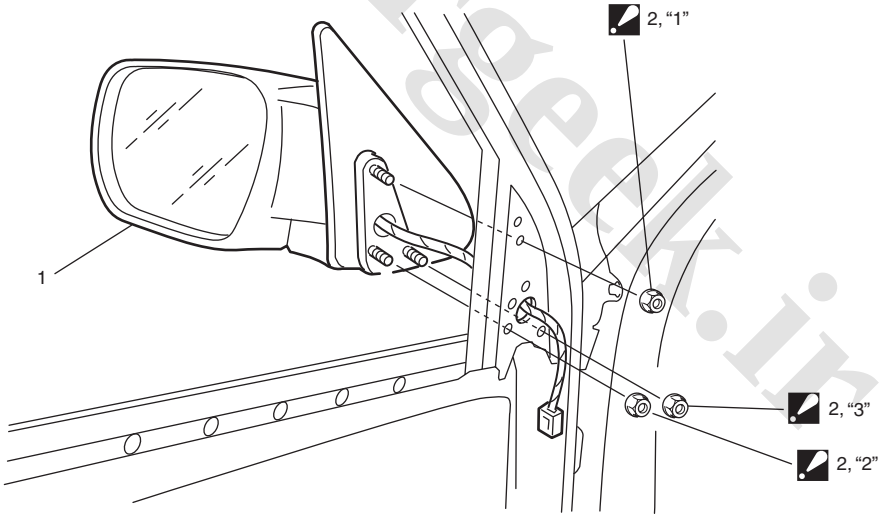


I5JB0A950038-02

| | |
|---|---|
| | 1. Door mirror |
| ◢ | 2. Door mirror mounting nut<br>:Tighten nuts in such order as indicated in the figure. |

www.cargeek.ir

www.CarGeek.ir

## Door Mirror Removal and Installation

S5JB0A9506019

When removing or installing door mirror, refer to the figure in “Door Mirror Components: ”.

## Power Door Mirror Switch Inspection (If Equipped)

S5JB0A9506020

1) Remove driver side door trim referring to step 1) to 3) of “Front Door Glass Removal and Installation: ”.
2) Remove power window main switch from door trim.
3) Check for continuity between terminals at each switch position.
   If check result is not as specified, replace door mirror switch.

| L / R | A / B | C | D | E / F | G |
|---|---|---|---|---|---|
| Up | | ○ | | ○ | ○ |
| | | | ○ | ○ | |
| Down | | | ○ | | ○ |
| | | ○ | | ○ | |
| Left | ○ | ○ | | | |
| | | | ○ | ○ | |
| Right | ○ | | ○ | | |
| | | ○ | | ○ | |

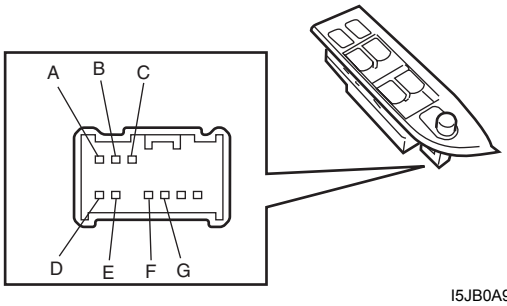


I5JB0A950039-01

## Power Door Mirror Actuator Inspection (If Equipped)

S5JB0A9506021

1) Remove door trim referring to step 1) to 3) of “Front Door Glass Removal and Installation: ”.
2) Disconnect door mirror coupler (1).
3) Check that door mirror operates properly when battery voltage is applied to connector terminals.
4) Connect battery positive (+) and negative (–) terminal to the door mirror terminals as shown.
   If it does not follow the table’s operation, replace door mirror assembly.

| Operation \ Terminal | A | B | C |
|---|---|---|---|
| Up | ⊕ | | ⊖ |
| Down | ⊖ | | ⊕ |
| Left | | ⊕ | ⊖ |
| Right | | ⊖ | ⊕ |

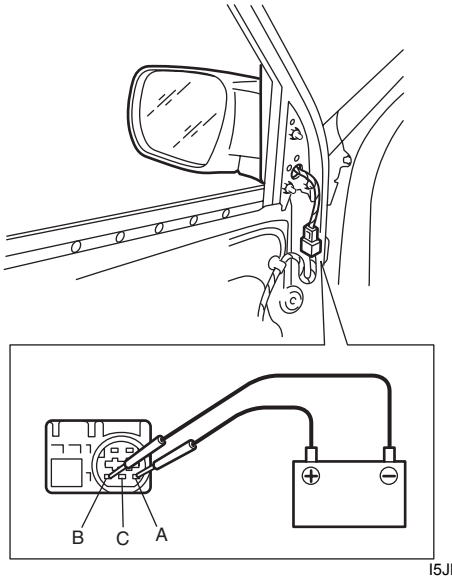


I5JB0A950040-01

## Door Mirror Heater Inspection (If Equipped)

S5JB0A9506022

1) Remove door trim referring to step 1) to 3) of “Front Door Glass Removal and Installation: ”.
2) Disconnect door mirror connector (1).
3) Check for continuity between terminals “a” and “b”.
   If no continuity, replace outside mirror.

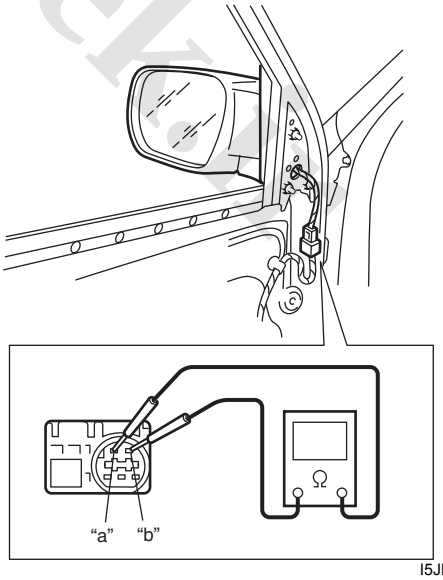


I5JB0A950041-01

www.cargeek.ir

www.CarGeek.ir


### Door Mirror Heater Relay Inspection (If Equipped)

S5JB0A9506024

1) Disconnect negative (–) cable from battery.
2) Remove door mirror heater relay (included in integration relay) (1) from main fuse box (2).

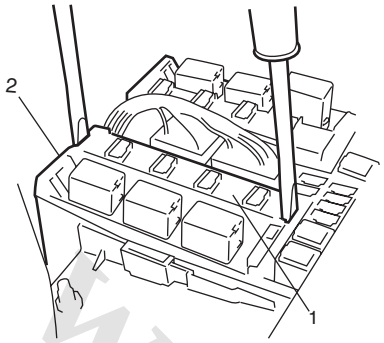


I5JB0A950031-01

3) Check that there is no continuity between terminals “a” and “b”.
   If there is continuity, replace relay.
4) Check that there is continuity between terminals “a” and “b” when a 12 V battery is connected to terminal “a” and “c”.
   If malfunction is found, replace integration relay.

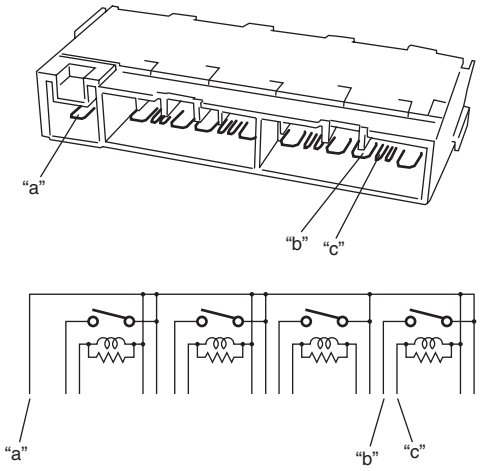


I5JB0A950042-02

## Special Tools and Equipment

### Recommended Service Material

S5JB0A9508001

| Material | SUZUKI recommended product or Specification | | Note |
|---|---|---|---|
| Grease | SUZUKI Super Grease A | P/No.: 99000–25010 | ☞ / ☞ |

**NOTE**

**Required service material is also described in the following.**
**“Front Door Window Components: ”**
**“Rear Door Window Components: ”**

www.cargeek.ir

www.CarGeek.ir

# Security and Locks

## General Description

### Key Coding Construction

S5JB0A9601001

**Key Usage and Identification**

Key is used for ignition and door lock cylinders. Key is cut on both edges to make them reversible.
Key identification is obtained from five character key code stamped on key code tag. Using this key code, key code cutting combination can be determined from a code list (available to owners of key cutting equipment from suppliers).

## Component Location

### Power Door Lock and Keyless Entry System Component Location

S5JB0A9603001

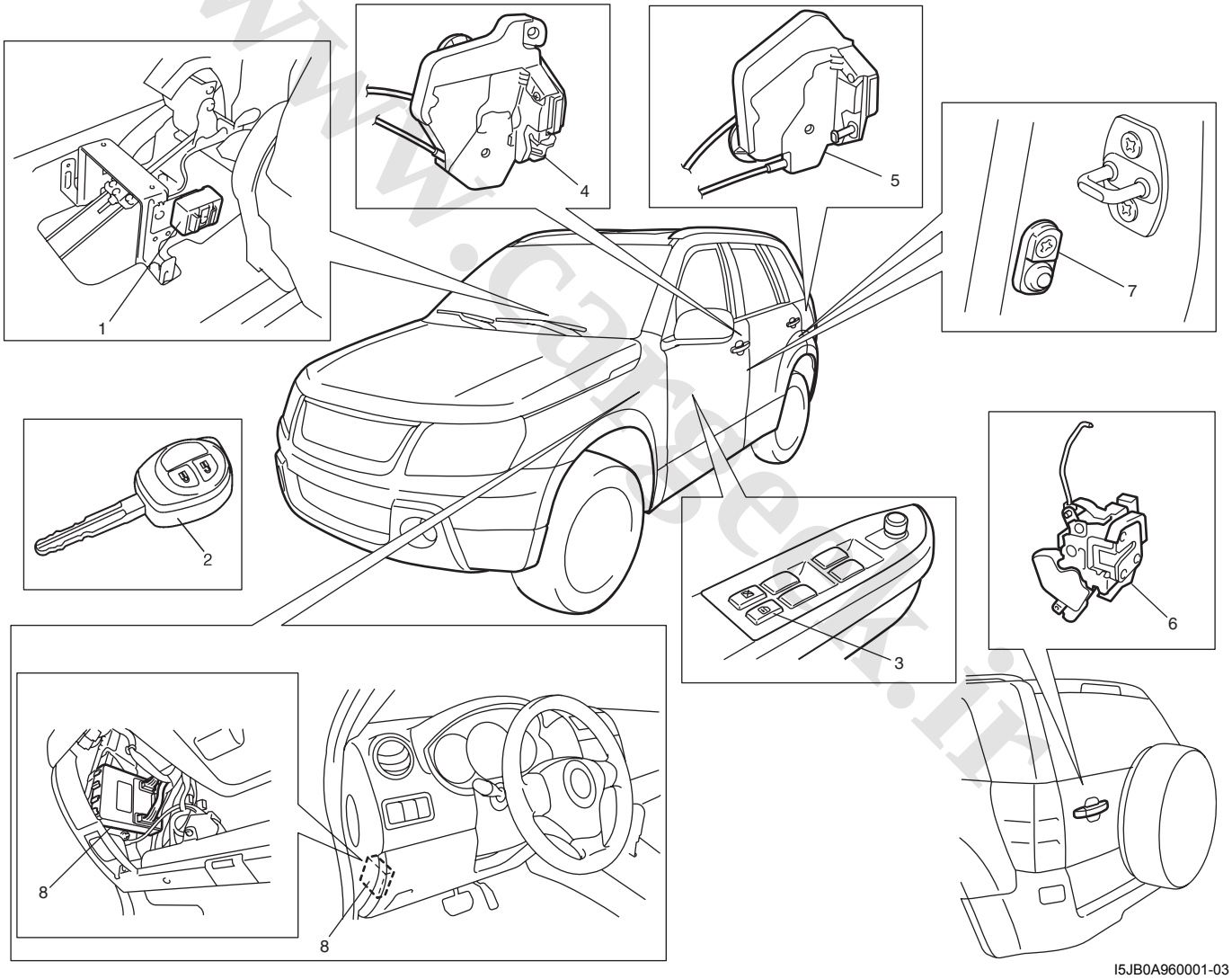


I5JB0A960001-03

| | | | |
|---|---|---|---|
| 1. Keyless entry receiver | 3. Power door lock switch | 5. Rear door actuator (5 door model only) | 7. Door switch |
| 2. Transmitter | 4. Front door actuator | 6. Rear end door actuator | 8. BCM |

www.cargeek.ir

www.CarGeek.ir


# Diagnostic Information and Procedures

## Power Door Lock System Symptom Diagnosis

S5JB0A9604001

**NOTE**

- **Use of SUZUKI scan tool makes it easy to check whether a faulty condition is on the input side or output side of BCM. For checking procedure, refer to "Diagnosis Using Output Test Function of SUZUKI Scan Tool" under "Scan Tool Data: in Section 10B".**
- **Check each part in the order from the top of the following list.**

| Condition | Possible cause | Correction / Reference Item |
|---|---|---|
| ***All door can not be locked / unlocked by all of switches*** | Circuit fuse blown | *Replace fuse and check for short circuit.* |
| | Wiring or grounding faulty | *Repair circuit.* |
| | BCM faulty | *Replace after making sure that none of above parts is faulty.* |
| ***All door can not be locked / unlocked by only power door lock switch*** | Circuit fuse blown | *Replace fuse and check for short circuit.* |
| | Power door lock switch faulty | *Check power door lock switch referring to "Power Door Lock Switch Inspection: ".* |
| | Wiring harness connected to power door lock switch faulty | *Repair.* |
| | Wiring or grounding faulty | *Repair circuit.* |
| | BCM faulty | *Replace after making sure that none of above parts is faulty.* |
| ***All door can not be locked / unlocked by only key cylinder switch*** | Circuit fuse blown | *Replace fuse and check for short circuit.* |
| | Key cylinder switch faulty | *Check key cylinder switch referring to "Door Key Cylinder Switch Inspection: ".* |
| | Wiring or grounding faulty | *Repair circuit.* |
| | BCM faulty | *Replace after making sure that none of above parts is faulty.* |
| ***Only one door can not be locked / unlocked*** | Power door lock actuator faulty | *Check actuator referring to "Power Door Lock Actuator Inspection (If Equipped): ".* |
| | Wiring harness connected to applicable door lock actuator faulty | *Repair.* |
| | BCM faulty | *Replace after making sure that none of above parts is faulty.* |

## Power Door Lock System Operation Inspection

S5JB0A9604002

1) Check the following operation:
   a) Turn the driver side key cylinder is turned LOCK once, check all doors lock.
   b) Turn the driver side door key cylinder is turned UNLOCK position with door key twice, check all doors unlock.
   c) With all doors unlocked, insert key in key cylinder of driver side door and turn it to lock side, turn it again to lock side within 3 seconds and check that no door can be opened even when door lock knob is moved to unlock side.

If malfunction is found, go to "Power Door Lock System Symptom Diagnosis: ".

www.cargeek.ir

www.CarGeek.ir

## Keyless Entry System Symptom Diagnosis (If Equipped)

S5JB0A9604004

**NOTE**

- **Confirm that power door lock system is in good condition before referring to the following possible causes.**
- **Check each part in the order from the top of the following list.**

| Condition | Possible cause | Correction / Reference Item |
|---|---|---|
| ***All door can not be locked / unlocked by only keyless entry transmitter*** | Transmitter battery dead | *Replace battery referring to "Replacement of Transmitter Battery: ".* |
| | Door switch faulty | *Check door switch referring to "Door Switch (Front / Rear / Rear End Door) Inspection: in Section 9C".* |
| | Transmitter faulty | *Replace transmitter.* |
| | Key remainder switch in ignition switch faulty | *Check ignition switch referring to "Ignition Switch Inspection: in Section 9C".* |
| | Wiring or grounding faulty | *Repair circuit.* |
| | Keyless entry receiver faulty | *Check keyless entry receiver referring to "Keyless Entry Receiver and Its Circuit Inspection: ".* |
| | BCM faulty | *Replace after making sure that none of above parts is faulty.* |
| ***Turn signal lights can not be flashed when doors are locked / unlocked by keyless entry transmitter*** | Turn signal and hazard warning relay faulty | *Check turn signal and hazard warning relay referring to "Turn Signal and Hazard Warning Relay Inspection: in Section 9B".* |
| | Wiring or grounding faulty | *Repair circuit.* |
| | BCM faulty | *Replace after making sure that none of above parts is faulty.* |
| ***Interior light does not light when doors are unlocked by keyless entry transmitter*** | Wiring or grounding faulty | *Repair circuit.* |
| | BCM faulty | *Replace after making sure that none of above parts is faulty.* |
| ***Hazard warning lights do not light when doors are locked/unlocked by keyless entry transmitter*** | Turn signal and hazard warning relay faulty | *Check turn signal and hazard warning relay referring to "Turn Signal and Hazard Warning Relay Inspection: in Section 9B".* |
| | Wiring or grounding faulty | *Repair circuit.* |
| | BCM faulty | *Replace after making sure that none of above parts is faulty.* |
| ***Transmitter code can not be programmed to BCM*** | Door switch faulty | *Check door switch referring to "Door Switch (Front / Rear / Rear End Door) Inspection: in Section 9C".* |
| | Keyless entry receiver faulty | *Check keyless entry receiver referring to "Keyless Entry Receiver and Its Circuit Inspection: ".* |
| | Key reminder switch in ignition switch faulty | *Check ignition switch referring to "Ignition Switch Inspection: in Section 9C".* |
| | Wiring or grounding faulty | *Repair circuit.* |
| | BCM faulty | *Replace after making sure that none of above parts is faulty.* |

www.cargeek.ir

www.CarGeek.ir


### Keyless Entry System Operation Inspection

S5JB0A9604005

1) Confirm that power door lock system operates normally, refer to “Power Door Lock System Operation Inspection: ”.
2) All doors are closed and unlocked.
3) Check the following operation:
   a) Push “lock” button (1) on transmitter (2) or remote controller once, and check all doors lock and hazard waning lights flash once.
   b) Push “unlock” button (3) on transmitter (2) or remote controller twice, and check all doors unlock and hazard waning lights flash twice and interior light turns on several seconds with the interior light switch in the middle position.

If malfunction is found, go to “Keyless Entry System Symptom Diagnosis (If Equipped): ”.

### Door Lock Function of Keyless Start System Symptom Diagnosis (If Equipped)

S5JB0A9604010

Proceed to “Keyless Start System Symptom Diagnosis: in Section 10E” in case that doors cannot be locked and unlocked by operating the request switch at the outside door handle.

## Repair Instructions

### Front Door Lock Assembly Components

S5JB0A9606001

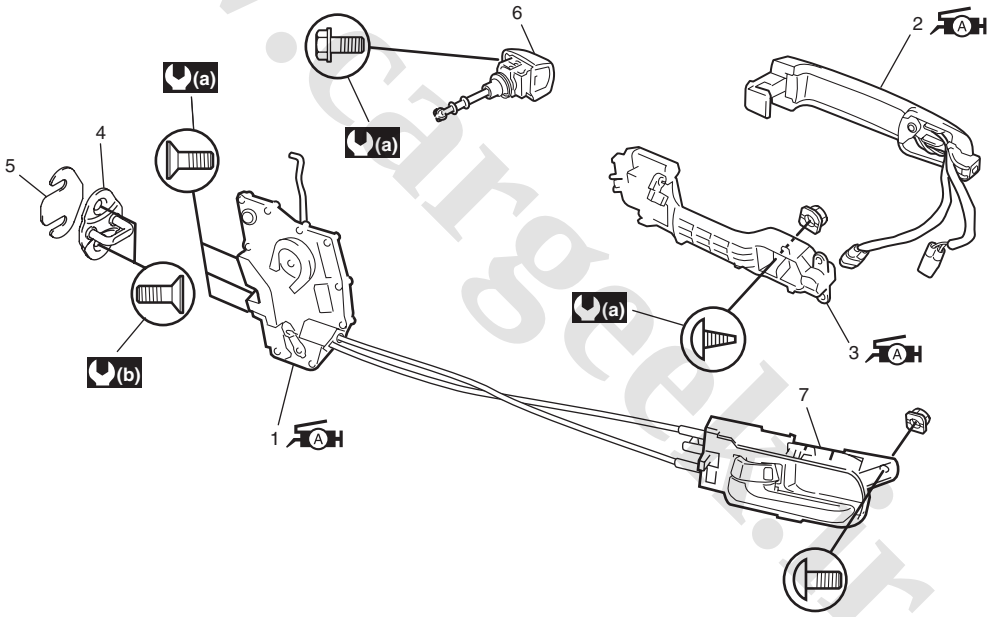


I5JB0A960002-02

| | | |
|---|---|---|
| 1. Front door latch assembly<br>: Apply lithium grease 99000-25010 to sliding and rotating parts and spring if any. | 4. Latch striker | 7. Inside handle bezel |
| 2. Outside handle assembly<br>: Apply lithium grease 99000-25010 to sliding part. | 5. Shim | (a) : 5.0 N·m (0.5 kgf-m, 4.0 lb-ft) |
| 3. Outside handle frame<br>: Apply lithium grease 99000-25010 to sliding part and spring. | 6. Key cylinder | (b) : 10 N·m (1.0 kgf-m, 7.5 lb-ft) |

www.cargeek.ir

www.CarGeek.ir

## Front Door Lock Assembly Removal and Installation

S5JB0A9606002

### Removal

1) Remove door mirror trim (1), front door inner garnish (2) (3 door model only) and door trim screw cover (3).
2) Remove door trim (4) after removing door trim screw (5) and clips.

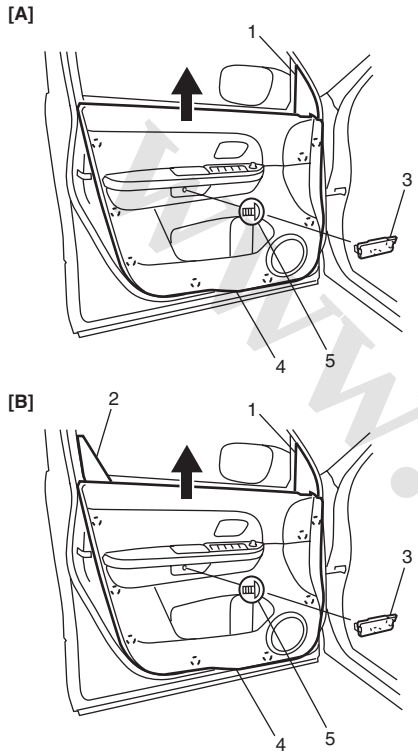


I5JB0A950010-01

| | |
|---|---|
| [A]: 5 door model | [B]: 3 door model |

3) Disconnect door illumination lamp lead wire and power window switch and mirror switch lead wire at coupler.
4) Remove door sealing cover (1).

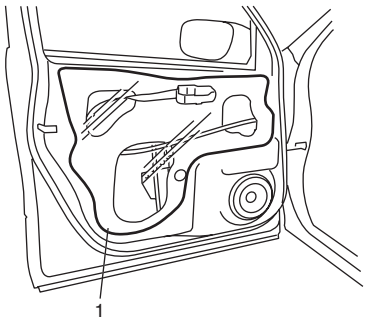


I5JB0A950011-01

5) Raise window all the way up.
6) Remove door sash (1).

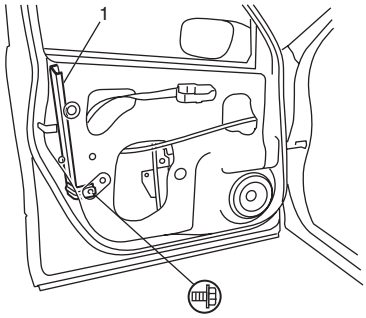


I5JB0A960003-01

7) Remove key cylinder mounting bolt (1), and then remove key cylinder (2).

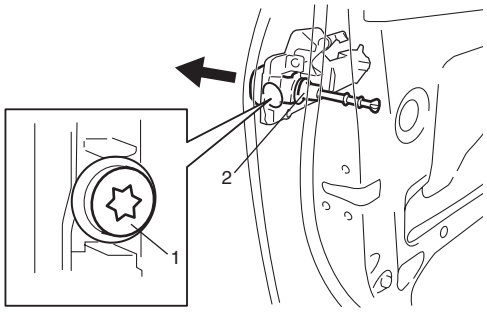


I4RS0B960005-01

8) Disconnect door opening control rod (1) from outside handle.
9) Disconnect door lock motor lead wire at coupler.
10) Remove door latch screws (2) and remove door lock assembly (3).

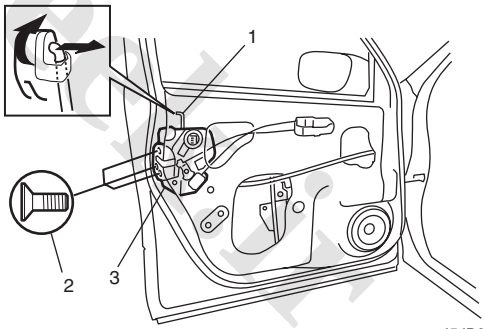


I5JB0A960004-01

www.cargeek.ir

www.CarGeek.ir


### Installation

Reverse removal procedure to install front door lock assembly noting the following instructions.

- Apply grease to sliding parts of door latch assembly.

  **: Grease 99000–25010**

- Tighten door latch screws to specified torque.

**Tightening torque**
**Door latch screw (a): 5.0 N·m (0.5 kgf-m, 4.0 lb-ft)**

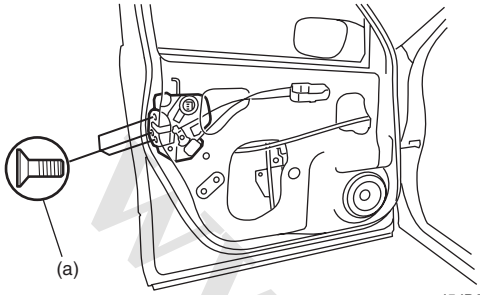


I5JB0A960005-01

- Move door latch striker (2) up or down so its center aligns with the center of groove “A” on the door lock assembly (1) as shown.
  Striker should be moved vertically and placed level.
  Do not adjust door lock.

**Tightening torque**
**Door latch striker screw (a): 10 N·m (1.0 kgf-m, 7.5 lb-ft)**

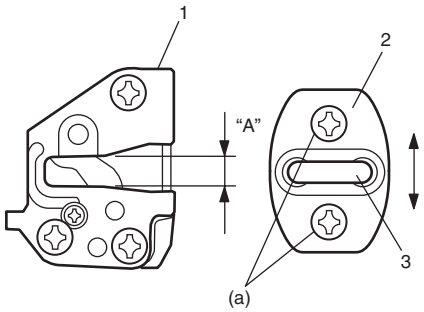


I5JB0A960006-01

| | |
|---|---|
| 3. | Shaft |

- Move door latch striker (1) sideways to adjust door outer panel surface (2) flush with rear door outer panel or body outer panel surface (3) as shown.
  In order to correctly obtain door lock operation increase or decrease number of shims inserted between body and striker (1) to adjust it.

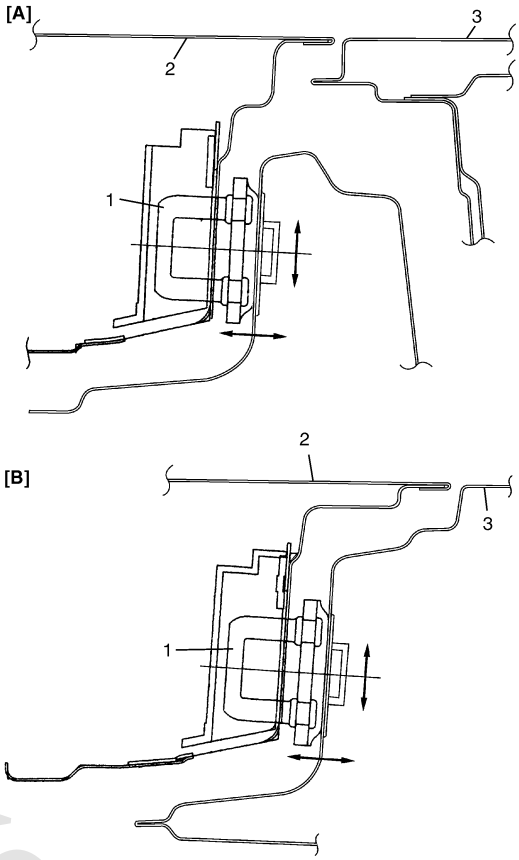


I3RM0A960013-01

| | |
|---|---|
| [A]: | Front door (5 door model) |
| [B]: | Rear door (5 door model) or front door (3 door model) |

## Front Door Lock Assembly Inspection

S5JB0A9606003

- Check that door open and closes smoothly and properly.
- Check that door stops in the secondary latched position properly (preventing door from opening freely) and that door closed completely in the fully latched position.
- Adjust door latch striker position, if necessary.

www.cargeek.ir

www.CarGeek.ir

## Power Door Lock Switch Inspection

S5JB0A9606004

Check for continuity between terminals at each switch position. If check result is not as specified, replace switch.

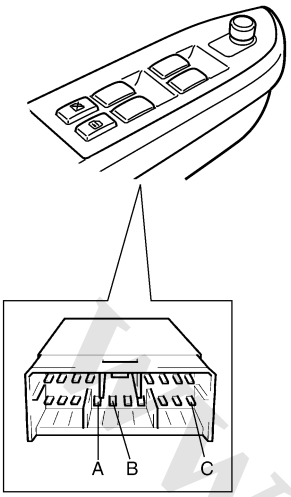


| Switch \ Terminal | A | B | C |
|---|---|---|---|
| LOCK | ○ | — | ○ |
| OFF | | | |
| UNLOCK | ○ | ○ | |

I5JB0A960007-01

1. Power door lock switch

## Door Key Cylinder Switch Inspection

S5JB0A9606005

1) Remove front door trim referring to Step 1) to 3) of “Front Door Glass Removal and Installation: in Section 9E”
2) Check for continuity between terminals at each switch position. If check result is not as specified, replace door lock assembly.

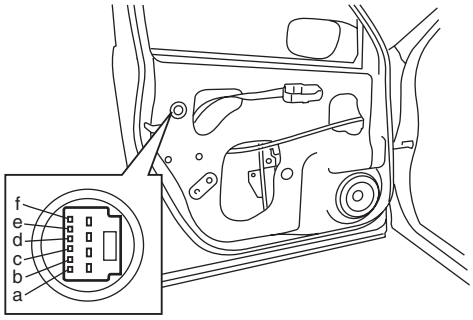


| Right side switch terminals | d | a | b |
|---|---|---|---|
| Left side switch terminals | c | f | e |
| LOCK | ○ | — | ○ |
| OFF | | | |
| UNLOCK | ○ | ○ | |

I5JB0A960008-01

## Power Door Lock Actuator Inspection (If Equipped)

S5JB0A9606006

**NOTE**

**If rear end door is closed and the rear end door lock actuator does not function in unlock position, follows the procedures to unlock the rear end door lock actuator.**

1. **Remove cap (1).**
2. **Penetrate door sealing cover (2) by jack lever (3) or whatever to insert jack lever, and push emergency lever (4) into unlock position “a”.**

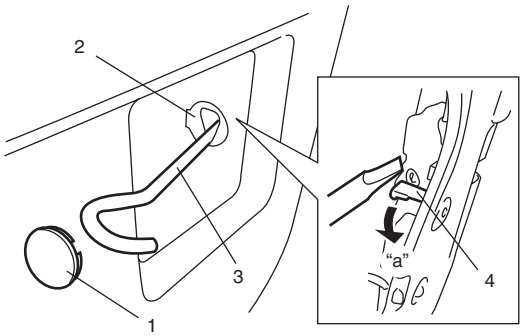


I5JB0A960022-01

3. **After inspection replace door sealing cover.**

1) Remove door trim from door panel.
   For front door, refer to Step 1) to 3) of “Front Door Glass Removal and Installation: in Section 9E”.
   For rear door, refer to Step 1) to 3) of “Rear Door Glass Removal and Installation: in Section 9E”.
   For rear end door, refer to Step 1) of “Rear End Door Assembly Removal and Installation: in Section 9J”.
2) Disconnect power door lock actuator coupler.
3) Connect battery positive (+) and negative (–) terminals to the door lock actuator terminals (a, b, c, d) as shown in figure.
   If it does not operate as specified in the following table, replace door lock assembly.

www.cargeek.ir

www.CarGeek.ir


## For front door

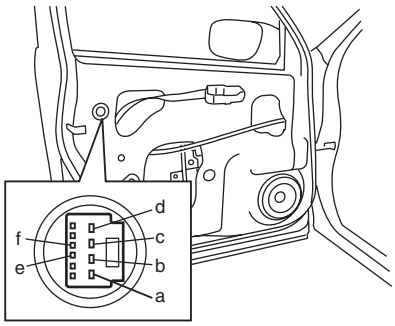


[A]

| Terminals | a | d |
|---|---|---|
| Lock → Unlock | ⊕ | ⊖ |
| Unlock → Lock | ⊖ | ⊕ |

| Terminals | f | g |
|---|---|---|
| Lock | | |
| Unlock | ○ | ○ |

[B]

| Right side switch terminals | a | b | c | d |
|---|---|---|---|---|
| Left side switch terminals | c | d | a | b |
| Lock → Unlock | ⊕ | ⊖ | | |
| Unlock → Lock | ⊖ | ⊕ | | |
| Deadlock → Unlock | | | ⊕ | ⊖ |
| Lock → Deadlock | | | ⊖ | ⊕ |

| Terminals | f | g |
|---|---|---|
| Lock | | |
| Unlock | ○ | ○ |

I5JB0A960009-01

| [A]: Without deadlock | [B]: With deadlock |
|---|---|

## For rear door

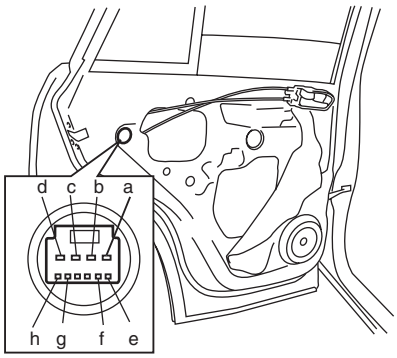


[A]

| Terminals | a | d |
|---|---|---|
| Lock → Unlock | ⊕ | ⊖ |
| Unlock → Lock | ⊖ | ⊕ |

| Terminals | f | g |
|---|---|---|
| Lock | | |
| Unlock | ○ | ○ |

[B]

| Right side switch terminals | c | d | a | b |
|---|---|---|---|---|
| Left side switch terminals | a | b | c | d |
| Lock → Unlock | ⊕ | ⊖ | | |
| Unlock → Lock | ⊖ | ⊕ | | |
| Deadlock → Lock | | | ⊕ | ⊖ |
| Lock → Deadlock | | | ⊖ | ⊕ |

| Right side switch terminals | g | h |
|---|---|---|
| Left side switch terminals | e | f |
| Lock | | |
| Unlock | ○ | ○ |

I5JB0A960010-01

| [A]: Without deadlock | [B]: With deadlock |
|---|---|

www.cargeek.ir

www.CarGeek.ir

### For rear end door

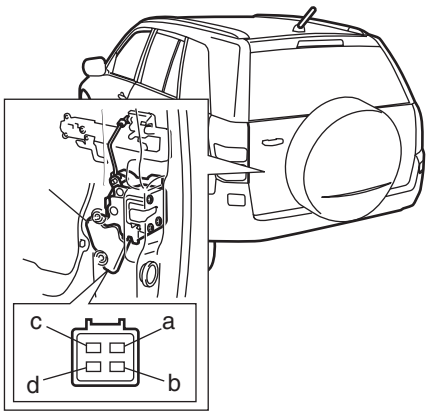


| Terminals | a | b |
|---|---|---|
| Lock → Unlock | ⊕ | ⊖ |
| Unlock → Lock | ⊖ | ⊕ |

| Terminals | c | d |
|---|---|---|
| Lock | | |
| Unlock | ○ | ○ |

I5JB0A960011-01

## Rear Door Lock Assembly Components

S5JB0A9606007

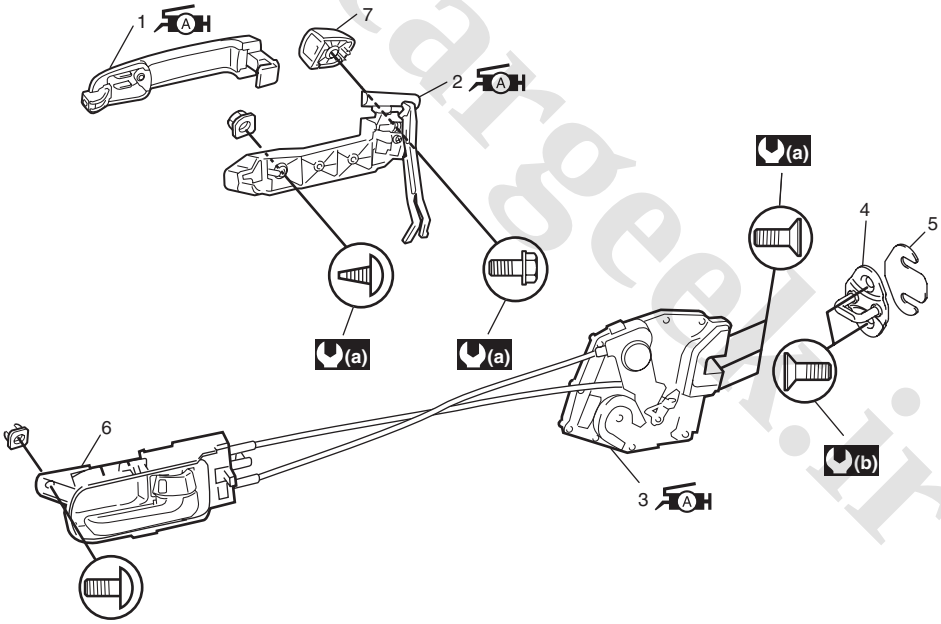


I5JB0A960012-03

| | | |
|---|---|---|
| 1. Outside handle<br>: Apply lithium grease 99000-25010 to sliding part. | 4. Latch striker | 7. Out side handle cap |
| 2. Outside handle frame<br>: Apply lithium grease 99000-25010 to sliding part and spring. | 5. Shim | (a) : 5.0 N·m (0.5 kgf-m, 4.0 lb-ft) |
| 3. Rear door latch assembly<br>: Apply lithium grease 99000-25010 to sliding part. | 6. Inside handle bezel | (b) : 10 N·m (1.0 kgf-m, 7.5 lb-ft) |

www.cargeek.ir

www.CarGeek.ir


## Rear Door Lock Assembly Removal and Installation

S5JB0A9606008

### Removal

1) Remove rear door trim referring to step 1) to 3) of “Rear Door Glass Removal and Installation: in Section 9E”.
2) Disconnect door lock motor lead wire.
3) Remove door latch mounting screws (1) and remove door latch assembly (2).

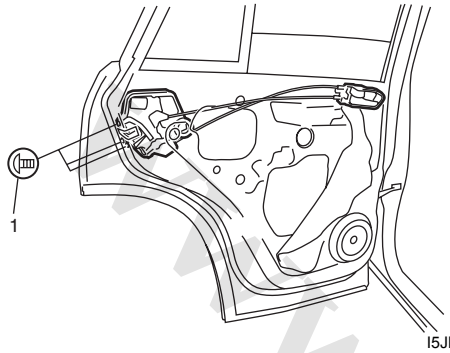


I5JB0A960013-01

### Installation

Reverse removal procedure to install rear door lock assembly referring to the following instruction and “Front Door Lock Assembly Removal and Installation: ”.

- Tighten door latch screw to specified torque.

**Tightening torque**
**Door latch screw (a): 5.0 N·m (0.5 kgf-m, 4.0 lb-ft)**

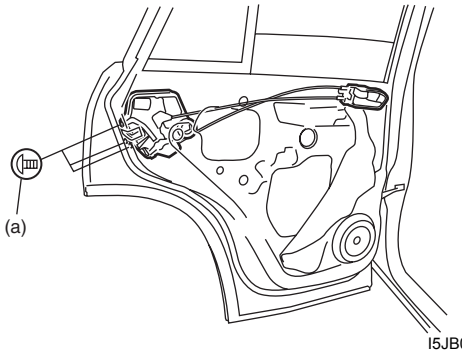


I5JB0A960014-01

## Rear Door Lock Assembly Inspection

S5JB0A9606009

- Check that door opens and closes smoothly and properly.
- Check that door stops in the secondary latched position properly (preventing door from opening freely) and that door closes completely in the fully latched position.
- Adjust door latch striker position, if necessary.

www.cargeek.ir

www.CarGeek.ir

## Rear End Door Lock Assembly Components

S5JB0A9606010

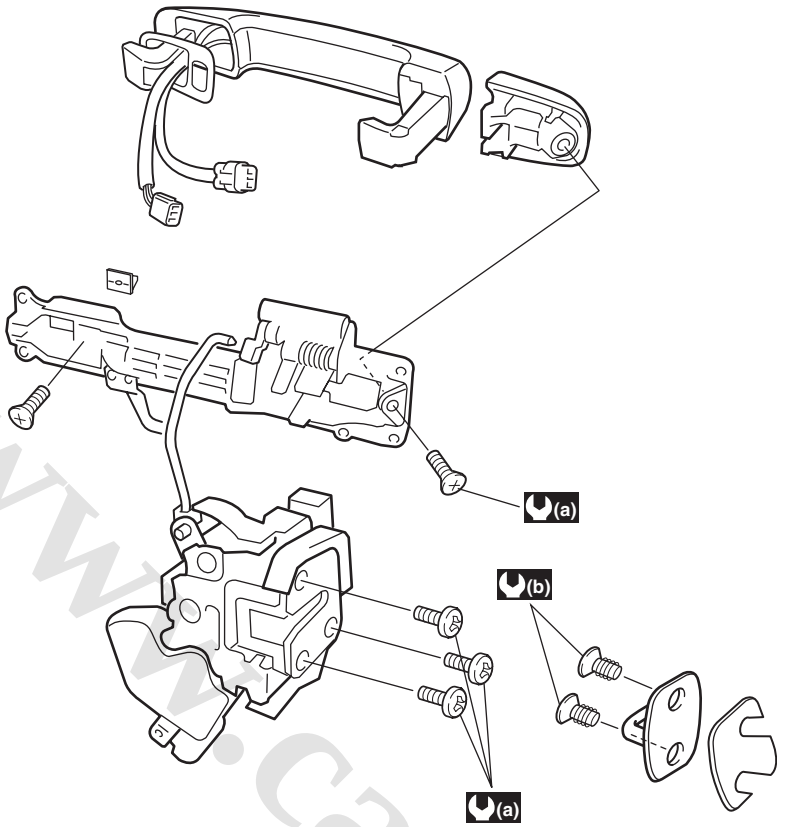


I5JB0A960015-01

| | | |
|---|---|---|
| 1. Rear end door latch assembly (rear end door switch is built in this assembly) | 4. Shim | 7. Rear end door request switch |
| 2. Rear end door opener switch | 5. Door handle | (a) : 10 N·m (1.0 kgf-m, 7.5 lb-ft) |
| 3. Latch striker | 6. Emergency lever | (b) : 23 N·m (2.3 kgf-m, 17.0 lb-ft) |

## Rear End Door Lock Assembly Removal and Installation

S5JB0A9606011

### Removal

1) Remove door trim (1) from rear end door panel (2).

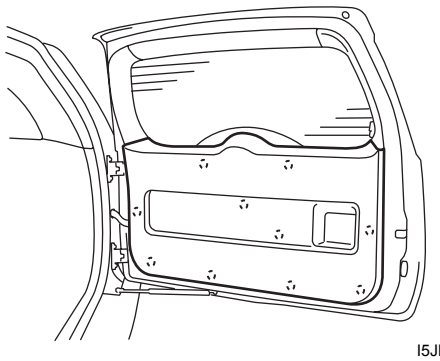

I5JB0A960016-01

2) Disconnect door lock motor lead wire and door opening control rod.

3) Loosen door latch bolts (1) and remove door latch assembly (2).

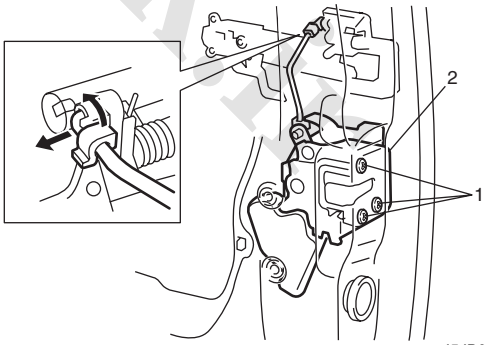


I5JB0A960017-01

www.cargeek.ir

www.CarGeek.ir


### Installation

Reverse removal procedure to install rear end door lock assembly noting the following instruction.

- Tighten rear end door latch bolt to specified torque.

  **Tightening torque**
  **Rear end door latch bolt (a): 10 N·m (1.0 kgf-m, 7.5 lb-ft)**

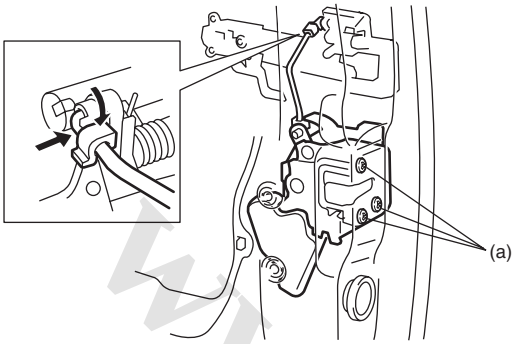


I5JB0A960018-01

- Adjust door latch striker so that its center aligns with the center of groove in door latch base.

  **Tightening torque**
  **Rear end door striker screw (a): 23 N·m (2.3 kgf-m, 17.0 lb-ft)**

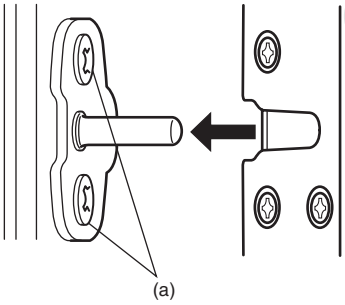


I5JB0A960019-01

## Rear End Door Lock Assembly Inspection

S5JB0A9606012

- Check that door opens and closes smoothly and properly.
- Check that door stops in the secondary latched position properly (preventing door from opening freely) and that door closes completely in the fully latched position.
- Adjust door latch striker position, if necessary.

## Replacement of Transmitter Battery

S5JB0A9606014

If transmitter becomes unreliable, replace transmitter battery as follows.

1) Remove screw (1) and transmitter cover (2).
2) Remove transmitter (3) from transmitter holder (4).

**⚠ CAUTION**

**Use care not to allow grease or dirt to be attached on the printed circuit board and the battery.**

3) With tip of flat blade screwdriver put in slot of transmitter, pry it open.
4) Replace the battery (lithium disc-type CR 1620 or equivalent battery) so its (+) terminal faces “+” mark on transmitter.
5) Fit together transmitter (3) and install it into transmitter holder (4).
6) Install transmitter cover (2) and screw (1).
7) Make sure that door locks can be operated with transmitter.

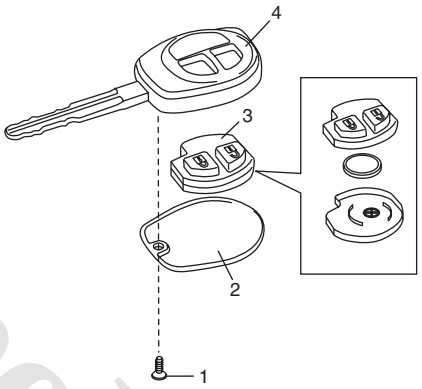


I4RS0B960014-01

**NOTE**

- **To prevent theft, be sure to break the transmitter before discarding it.**
- **Dispose of the used battery properly according to applicable rules or regulations. Do not dispose of lithium batteries with ordinary household trash.**

www.cargeek.ir

www.CarGeek.ir

## Programming Transmitter Code for Keyless Entry System (Vehicle without Keyless Start System)

S5JB0A9606015

**NOTE**

- **Three transmitter codes can be registered.**
- **When a new transmitter code is registered, the oldest one will be cleared.**
- **As for vehicle equipped with keyless start system, perform "Registration Procedure for Remote Controller ID Code: in Section 10E" instead of "Programming Transmitter Code for Keyless Entry System (Vehicle without Keyless Start System): ".**

If transmitter or BCM is replaced with a new one or additional transmitter(s) is necessary, program transmitter code(s).

1) Confirm that all doors are closed and ignition key is out of ignition key cylinder
2) Open driver side door.
3) Turn ignition switch to ON position, and then drawn ignition key from ignition key cylinder within 10 seconds after that.
4) Push and release driver side door switch (1) at 3 times by hand within 20 seconds after removing ignition key from ignition key cylinder.
5) Turn ignition switch to ON position, and then drawn ignition key from ignition key cylinder within 10 seconds after that. All doors automatically lock and unlock once.
   With this, registration mode.
6) Push "UNLOCK" button (2) on transmitter (3) within 20 seconds after Step 5). All doors automatically lock and unlock once.
   With this, code registration is completed.
7) If an additional transmitter, needs to be programed repeat the procedure of Step 1).

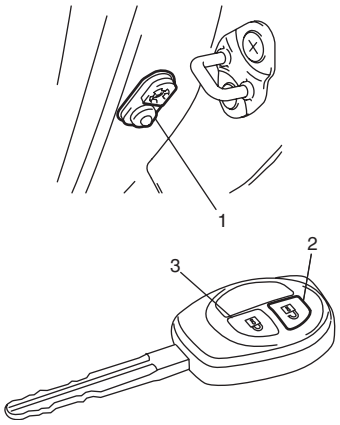


I4RS0B960010-01

## Keyless Entry Receiver Removal and Installation

S5JB0A9606016

### Removal

1) Disconnect negative cable at battery.
2) Remove console box from vehicle body referring to "Console Box Components: in Section 9H".
3) Disconnect keyless entry receiver coupler.
4) Remove keyless entry receiver (1).

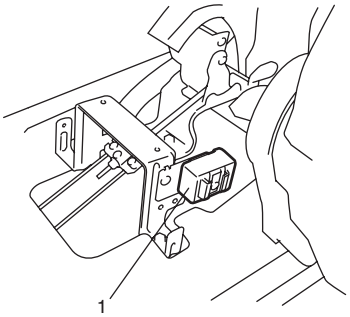


I5JB0A960020-01

### Installation

Reverse removal procedure.

www.cargeek.ir

www.CarGeek.ir


## Keyless Entry Receiver and Its Circuit Inspection

S5JB0A9606017

1) Check that the voltage between the following terminals and body ground are specifications under each conditions. If check result is not as specified, check applicable circuit for open or short. If circuit is normal, proceed to next step.

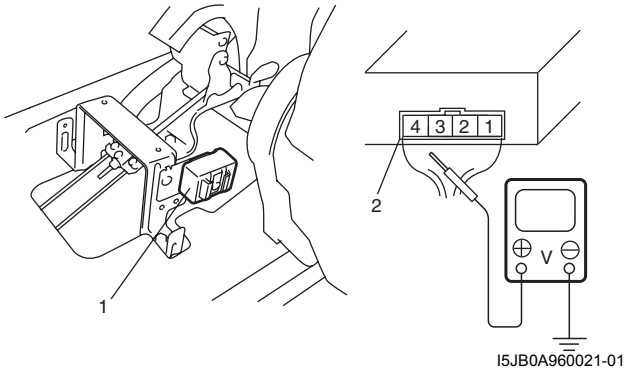


| | |
|---|---|
| 1. | Keyless entry receiver |
| 2. | Keyless entry receiver connector (view from harness side) |

| Terminal | Circuit | Specification | Condition |
|---|---|---|---|
| L44-1 | Power source | Figure [A] | Push “Lock” or “Unlock” button on transmitter. |
| | | 0-1 V | Except the above-mentioned condition. |
| L44-3 | Lock/Unlock output signal circuit | Figure [A] | Push “Lock” or “Unlock” button on transmitter. |
| | | 0-1 V | Except the above-mentioned condition. |
| L44-4 | Ground | 0-1 V | — |

**Oscilloscope setting**
CH1: 2V/DIV
CH2: 2V/DIV
TIME: 200 ms/DIV

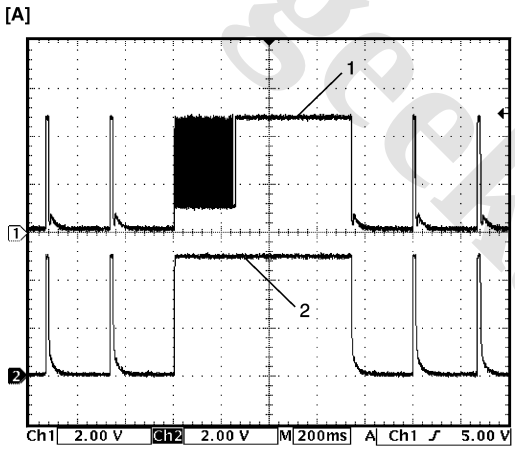


| | |
|---|---|
| 1. | Lock/Unlock out put signal |
| 2. | Power source |

1) Recheck keyless entry receiver as follows.
   a) Substitute a known-good keyless entry receiver.
   b) Record key code referring to “Programming Transmitter Code for Keyless Entry System (Vehicle without Keyless Start System): ”.
   c) Recheck keyless entry receiver system.

www.cargeek.ir

www.CarGeek.ir

# Specifications

## Tightening Torque Specifications

S5JB0A9607001

| Fastening part | Tightening torque | | | Note |
|---|---|---|---|---|
| | N·m | kgf-m | lb-ft | |
| Door latch screw | 5.0 | 0.5 | 4.0 | ☞ / ☞ |
| Door latch striker screw | 10 | 1.0 | 7.5 | ☞ |
| Rear end door latch bolt | 10 | 1.0 | 7.5 | ☞ |
| Rear end door striker screw | 23 | 2.3 | 17.0 | ☞ |

**NOTE**

**The specified tightening torque is also described in the following.**
**“Front Door Lock Assembly Components: ”**
**“Rear Door Lock Assembly Components: ”**
**“Rear End Door Lock Assembly Components: ”**

**Reference:**
For the tightening torque of fastener not specified in this section, refer to “Fastener Information:  in Section 0A”.

# Special Tools and Equipment

## Recommended Service Material

S5JB0A9608001

| Material | SUZUKI recommended product or Specification | | Note |
|---|---|---|---|
| Grease | SUZUKI Super Grease A | P/No.: 99000–25010 | ☞ |

**NOTE**

**Required service material is also described in the following.**
**“Front Door Lock Assembly Components: ”**
**“Rear Door Lock Assembly Components: ”**

www.cargeek.ir

www.CarGeek.ir


# Seats

## Diagnostic Information and Procedures

### Front Seat Heater Symptom Diagnosis (If Equipped)

S5JB0A9704001

| Condition | Possible cause | Correction / Reference Item |
|---|---|---|
| ***Both seat back and cushion do not become hot although seat heater switch is ON position*** | Wiring or grounding faulty | *Repair.* |
| | "IG2 SIG" fuse blown | *Replace fuse to check for short.* |
| | Seat heater switch faulty | *Replace switch.* |
| | Seat heater circuit in seat back and/or seat cushion faulty | *Replace heater front back and/or heater front cushion.* |
| ***Only seat back does not become hot although seat heater switch is ON position*** | Wiring faulty | *Repair.* |
| | Seat heater circuit in seat back and/or seat cushion faulty | *Replace heater front back and/or heater front cushion.* |
| ***Only seat cushion does not become hot although seat heater switch is ON position*** | Wiring faulty | *Repair.* |
| | Seat heater circuit in seat cushion | *Replace heater front cushion.* |

## Repair Instructions

### Front Seat Components

S5JB0A9706001

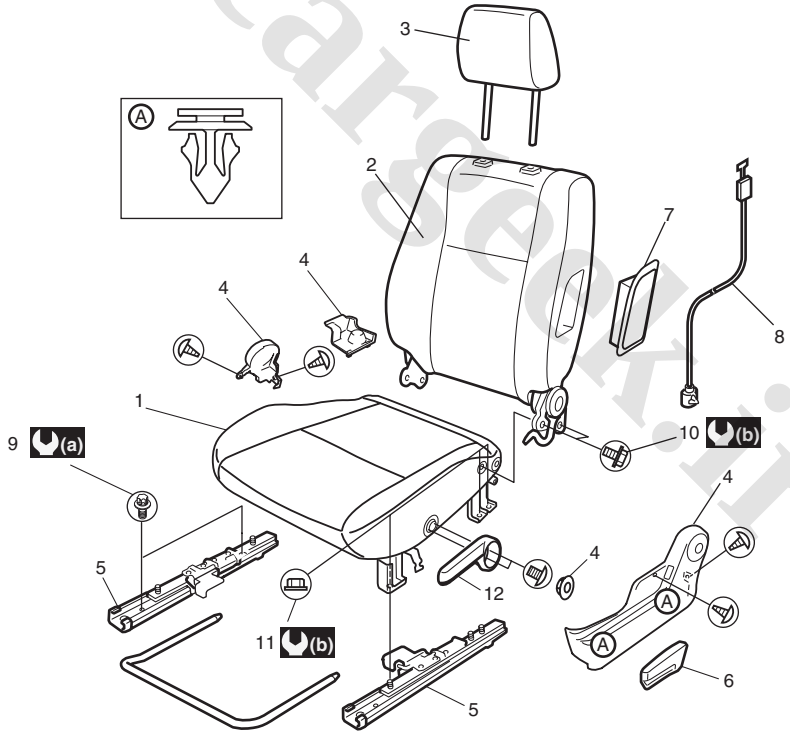


I5JB0A970001-02

| | | | |
|---|---|---|---|
| 1. Seat cushion | 5. Seat adjuster | 9. Seat mounting bolt | (a) : 23 N·m (2.3 kgf-m, 17.0 lb-ft) |
| 2. Seat back | 6. Knob | 10. Seat back bolt | (b) : 35 N·m (3.5 kgf-m, 25.5 lb-ft) |
| 3. Headrestraint | 7. Side air bag module (if equipped) | 11. Seat cushion nut | |
| 4. Cover | 8. Side air bag harness (if equipped) | 12. Seat lifter lever (if equipped) | |

www.cargeek.ir

www.CarGeek.ir

## Front Seat Removal and Installation

S5JB0A9706002

### Removal

1) Disable air bag system referring to “Disabling Air Bag System: in Section 8B”.
2) Disconnect seat harness coupler, seat heater coupler and side air bag coupler, if equipped.
3) Remove 4 mounting bolts to remove seat assembly.
4) Disassemble and repair seat as necessary.

### Installation

Reverse removal procedure to install front seat.

- Torque to specifications as shown in “Front Seat Components: ”.
- Enable air bag system referring to “Enabling Air Bag System: in Section 8B”.

## Front Seat Heater Switch (Driver and Passenger Side) Inspection (If Equipped)

S5JB0A9706005

1) Confirm that ignition switch is OFF position.
2) Detach gear shift panel from front center console box.
3) Disconnect seat heater switch coupler.
4) Check for continuity between terminals at each switch position as shown below. If check result is not as specified, replace.

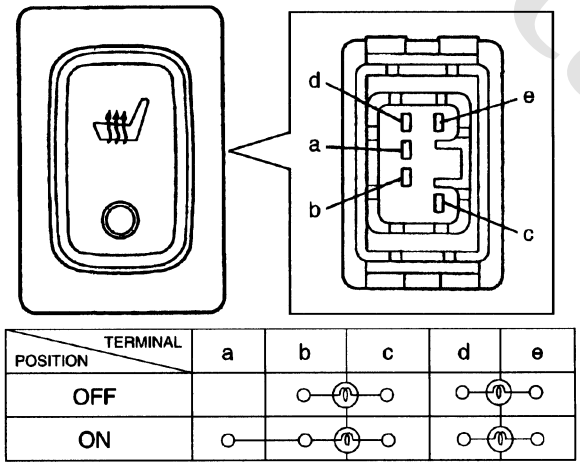


I5JA01970001-01

## Front Seat Heater Wire Inspection (If Equipped)

S5JB0A9706006

1) Confirm that seat heater switch is OFF position.
2) Disconnect coupler of seat heater under the seat cushion.
3) Measure resistance between terminals as shown below. If resistance is out of specification, replace faulty seat cushion and/or seat back including seat heater.

**Seat heater circuit resistance**

**Seat cushion side [A] (between terminal “B” and “C”, between terminal “A” and “C”): 4.7 – 5.7 Ω (at 20 °C, 68 °F)**

**Seat back side [B] (between terminal “F” and “D”: 10.7 – 13.1 Ω (at 20 °C, 68 °F)**

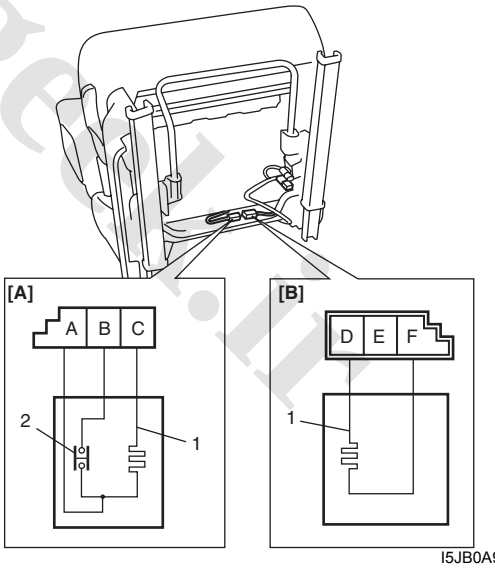


I5JB0A970002-01

| | |
|---|---|
| 1. | Heater wire |
| 2. | Thermostat |
| [A]: | Seat cushion side |
| [B]: | Seat back side |

www.cargeek.ir

www.CarGeek.ir


## Rear Seat Components

S5JB0A9706003

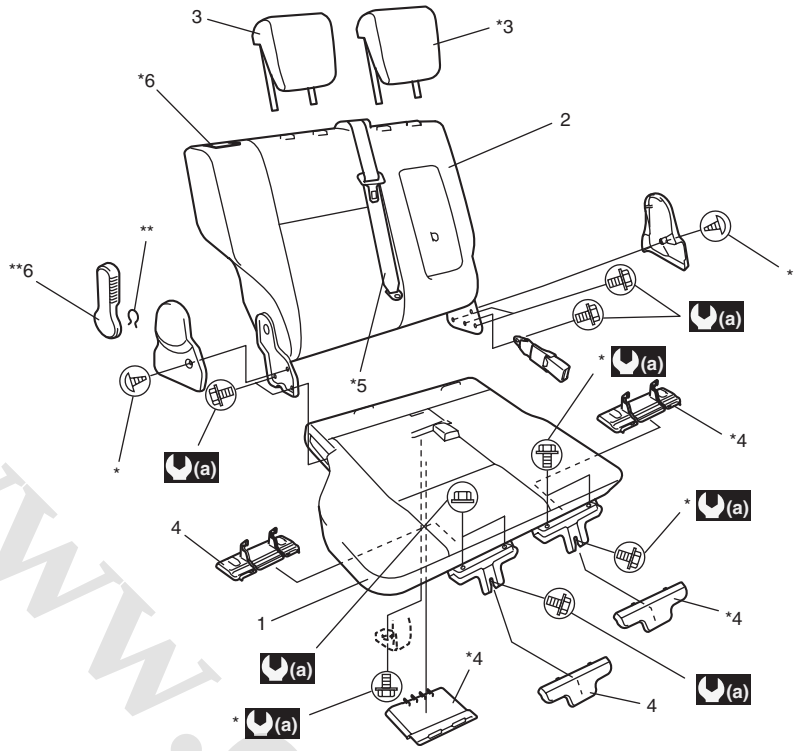


I5JB0A970003-01

| | | |
|---|---|---|
| 1. Seat cushion | 4. Cover | (a) : 35 N·m (3.5 kgf-m, 25.5 lb-ft) |
| 2. Seat back | 5. Rear center seat belt | *: 5 door model |
| 3. Headrestraint | 6. Reclining lever | **: 3 door model |

## Rear Seat Removal and Installation

S5JB0A9706004

### Removal

1) Remove seat mounting bolt(s) in the bracket.
2) Fold rear seat back and unlock the seat cushion lock to pull forward the seat cushion.
3) Remove seat mounting nuts (bolts) to remove rear seat assembly.
4) Disassemble and repair seat as necessary.

### Installation

Reverse removal procedure to install rear seat.

- Torque to specifications in “Rear Seat Components: ”.

# Specifications

## Tightening Torque Specifications

S5JB0A9707001

**NOTE**

**The specified tightening torque is also described in the following.**
**“Front Seat Components: ”**
**“Rear Seat Components: ”**

**Reference:**
For the tightening torque of fastener not specified in this section, refer to “Fastener Information:  in Section 0A”.

www.cargeek.ir

www.CarGeek.ir

# Interior Trim

## Repair Instructions

### Floor Carpet Removal and Installation

S5JB0A9806001

#### Removal

1) Remove front seats and rear seats.
2) Remove seat belt lower anchor bolt.
3) Remove side sill scuffs (1) (front and rear for 5 door model), front pillar lower trims (2), center pillar inner lower trims (3) (for 5 door model), back panel trim (4), rear quarter lower trims (5).

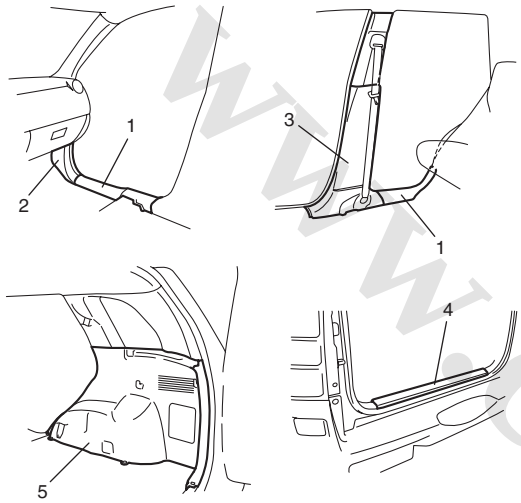


I5JB0A980001-01

4) Remove front and rear console boxes.
5) Remove floor carpet.

#### Installation

Reverse removal sequence to install front floor carpet, noting the following instruction.

- For tightening torque of rear seat mounting bolt and nut, refer to “Rear Seat Components: in Section 9G”.
- For tightening torque of front seat mounting bolt, refer to “Front Seat Components: in Section 9G”.
- For tightening torque of seat belt lower anchor bolt, refer to “Front Seat Belt Components: in Section 8A” and “Rear Seat Belt Components: in Section 8A”.

### Head Lining Removal and Installation

S5JB0A9806002

**⚠ WARNING**

**Refer to “Air Bag Warning: in Section 00” before starting service work.**

#### Removal

1) Remove overhead console (1) (if equipped) and sunvisor (2).

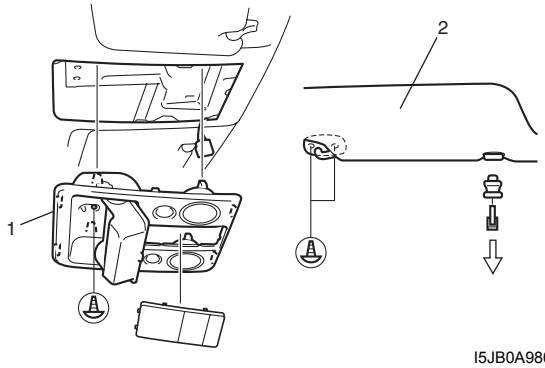


I5JB0A980002-02

2) Remove room lamp (2), luggage lamp (1) and spot lamp (3) (if equipped).

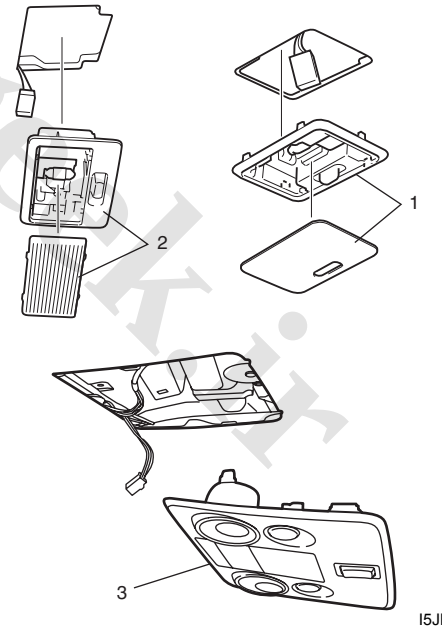


I5JB0A980003-01

www.cargeek.ir

www.CarGeek.ir


3) Remove front pillar upper trims (1), side sill scuffs (2) (front and rear for 5 door model), center pillar inner lower trims (3) (for 5 door model), center pillar inner upper trims (4) (for 5 door model), back panel trim (5), rear quarter lower trims (6) and rear quarter upper trims (7).

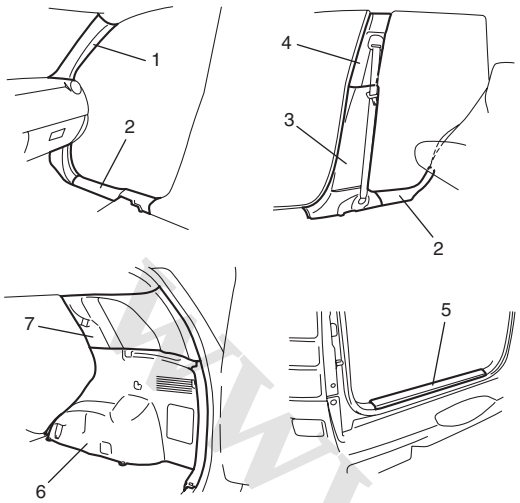


I5JB0A980004-01

4) Remove assistant grip (1).
5) Remove head lining clips (2) and remove head lining (3).

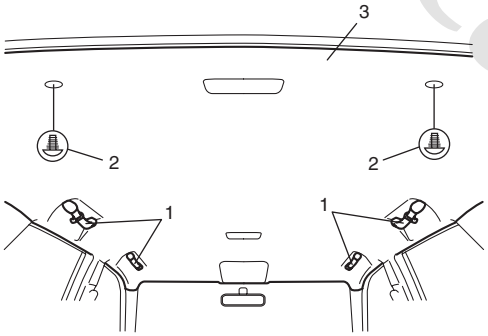


I5JB0A980005-01

**Installation**

Reverse removal procedure noting the following.

- Set roof harness (1), rear washer hose (2) and antenna feeder (3) to head lining with adhesive tape (4) as shown.

**3 door model**

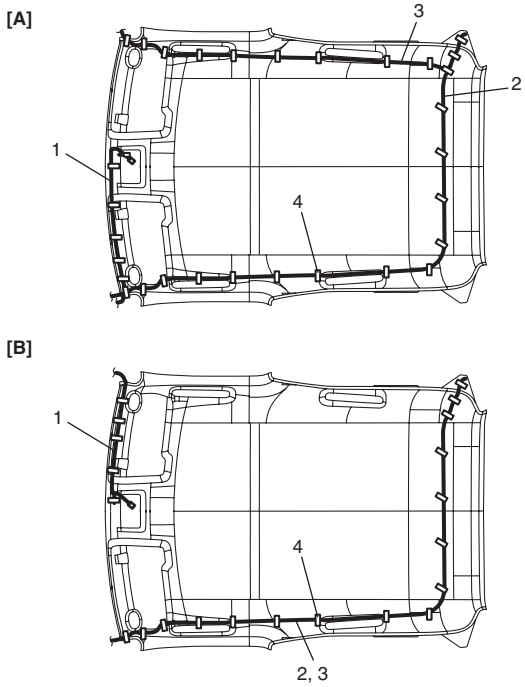


I5JB0A980006-02

| | |
|---|---|
| [A]: | Left-hand steering vehicle |
| [B]: | Right-hand steering vehicle |

www.cargeek.ir

www.CarGeek.ir

**5 door model**

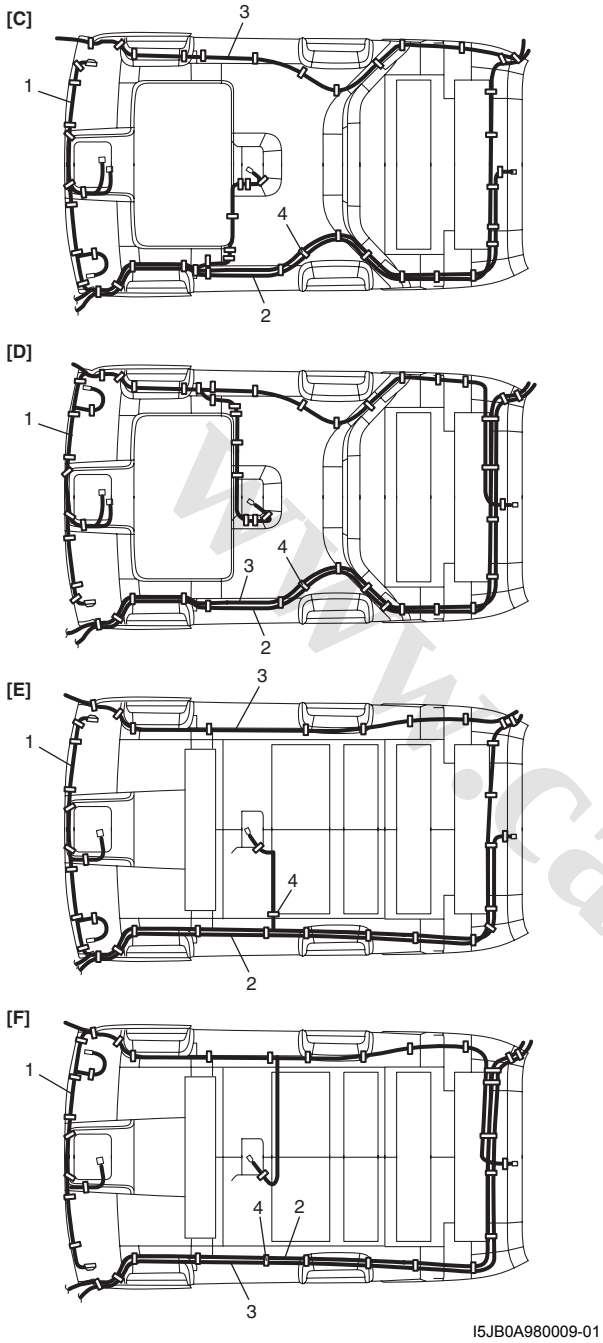


I5JB0A980009-01

| | |
|---|---|
| [C]: | Left-hand steering vehicle with sliding roof |
| [D]: | Right-hand steering vehicle with sliding roof |
| [E]: | Left-hand steering vehicle without sliding roof |
| [F]: | Right-hand steering vehicle without sliding roof |

- For equipped with sliding roof, hook on bracket (1) of roof lining to sliding roof housing (2).

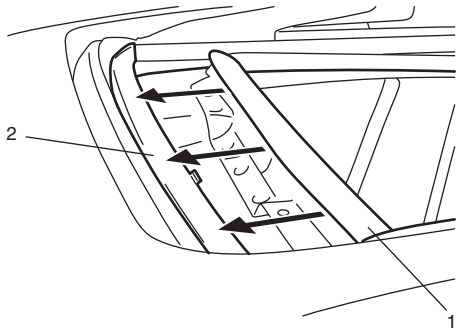


I5JB0A980007-01

- For equipped with sliding roof, adhere fasteners (1) on roof lining to fasteners of sliding roof frame securely.

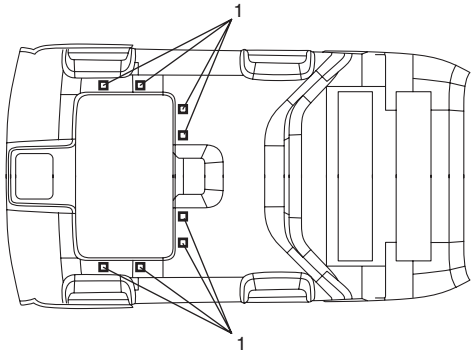


I5JB0A980010-01

- For tightening torque of seat belt anchor bolt, refer to “Front Seat Belt Components: in Section 8A” and “Rear Seat Belt Components: in Section 8A”.

www.cargeek.ir

www.CarGeek.ir


## Console Box Components

S5JB0A9806003

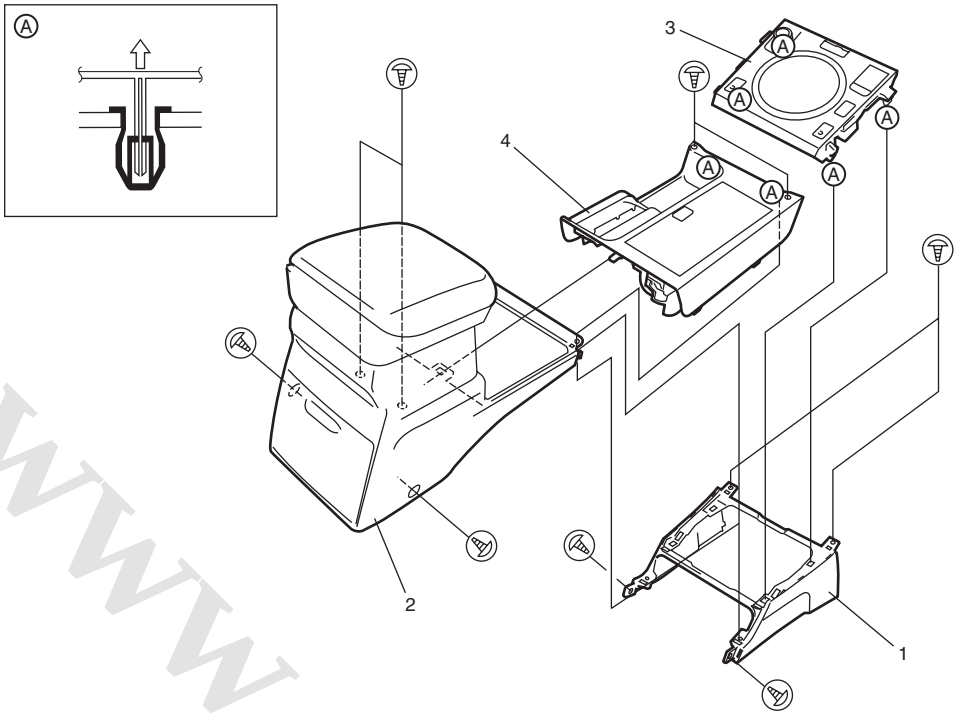


I5JB0A980008-02

| | |
|---|---|
| 1. Front console box | 3. Gear shift panel |
| 2. Rear console box | 4. Console rear panel |

www.cargeek.ir

 www.CarGeek.ir

# Sun Roof / T-Top / Convertible Top

## General Description

### Power Sliding (Sun) Roof System Description

S5JB0A9901001

The controller is included in the sliding roof motor unit.
The sliding roof functions are controlled with the sliding roof position data. Sliding roof position and sliding direction are detected by the controller referring to pulse signals from motor.
Initialization of the sliding roof position data is required in the following situation to reset anti-pinching function: battery cable or motor connector is disconnected since the sliding roof position data is deleted without power supply to the motor. Refer to “How to reactivate the system to prevent being pinched by the sunroof” in Sunroof section of Owner’s manual to initialize the sliding roof position data.

## Diagnostic Information and Procedures

### Power Sliding (Sun) Roof System Symptom Diagnosis

S5JB0A9904001

| Condition | Possible cause | Correction / Reference Item |
|---|---|---|
| ***Sliding roof does not operate (sliding roof motor runs OK)*** | Foreign object stuck in sliding roof rail | *Remove or clean stuck object.* |
| | Mis-installation of sliding roof rail | *Install correctly.* |
| | Conflicts of sliding roof parts | *Fix conflicts.* |
| | Mis-installation of sliding roof drive cable | *Install correctly.* |
| ***Sliding roof does not operate (sliding roof motor does not run)*** | Circuit fuse blown | *Replace fuse to check for short.* |
| | Sliding roof switch faulty | *Check sliding roof switch referring to “Sliding (Sun) Roof Switch Inspection: ”.* |
| | Wiring or grounding faulty | *Check circuit referring to “Sliding (Sun) Roof System Circuit and Motor Inspection: ”.* |
| | Sliding roof motor faulty | *Check sliding roof motor referring to “Sliding (Sun) Roof System Circuit and Motor Inspection: ”.* |

## Repair Instructions

### Sliding (Sun) Roof Glass Components

S5JB0A9906001

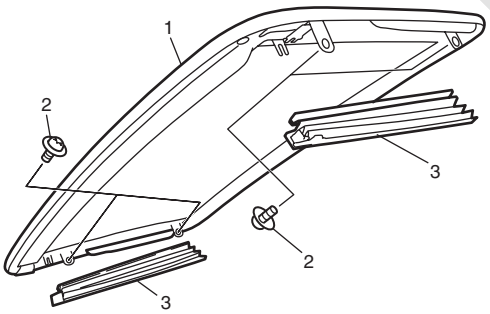


I5JB0A990001-01

| | |
|---|---|
| 1. | Sliding roof glass |
| 2. | Bolt |
| 3. | Sliding roof cover |

www.cargeek.ir

## Sliding (Sun) Roof Glass Removal and Installation

S5JB0A9906002

### Removal

1) Open sunshade (1) fully and tilt up sliding roof.

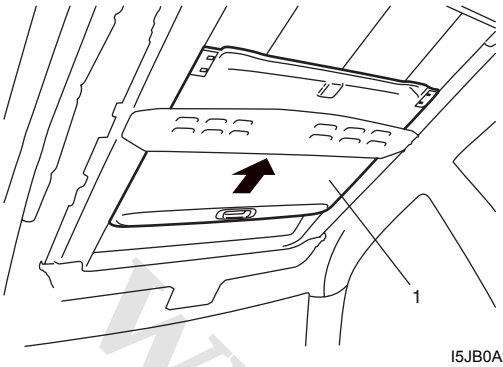


I5JB0A990002-01

2) Disconnect negative (–) cable at battery.
3) Remove sliding roof covers.
4) Remove sliding roof glass by removing bolts (TORX® T25) (1).

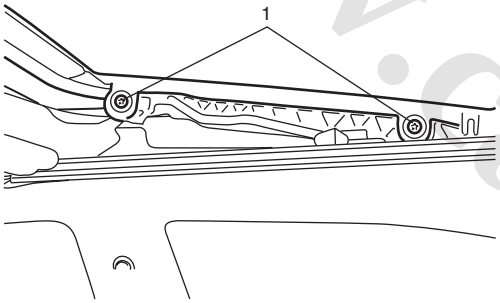


I5JB0A990003-01

### Installation

For installation, reverse removal procedure, noting the following points.

1) Tighten glass fixing bolts temporarily.
2) Initialize sliding roof position data referring to Owner's Manual.
3) Position sliding roof glass by closing sliding roof glass completely.
4) Tighten glass fixing bolts after sliding roof glass adjustment referring to "Sliding (Sun) Roof Glass Adjustment: ".

## Sliding (Sun) Roof Glass Adjustment

S5JB0A9906003

1) Loosen sliding roof glass fixing screws (at 4 locations) and move sliding roof glass (1) up and down 2 to 3 times. In this way, sliding roof glass can be positioned in both vertical and horizontal directions by elasticity of sliding roof weather strip.
2) Position sunroof glass by such dimensions with respect to roof panel surface as specified below.

**Sliding roof glass position (between glass roof and roof panel)**
**"a": 0 mm (0.0 in.)**

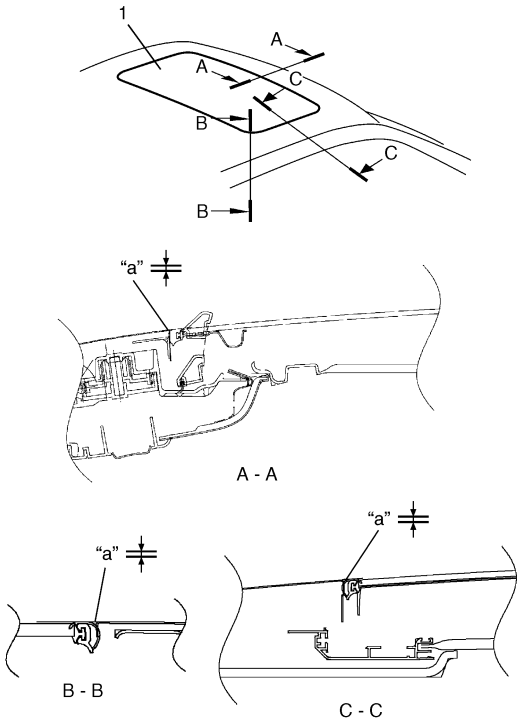


I5JB0A990004-01

3) After installing all parts and adjusting properly, check sunroof for proper operation (open, close and up).

## Sliding (Sun) Roof Switch Inspection

S5JB0A9906005

Check switch for continuity between terminals as shown below.

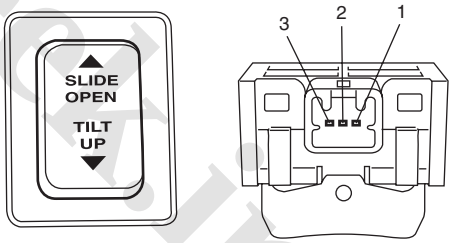


| Terminal \ Switch | TILT UP | N | SLIDE OPEN |
|---|---|---|---|
| 1 | ○ | | |
| 2 | ○ | | ○ |
| 3 | | | ○ |

I5JB0A990005-01

www.cargeek.ir

 www.CarGeek.ir

## Sliding (Sun) Roof Motor Removal and Installation

S5JB0A9906006

### Removal

1) Remove spot lamp assembly from head lining.
2) Disconnect coupler (3) and remove sliding roof motor (1) by removing 2 bolts (2).

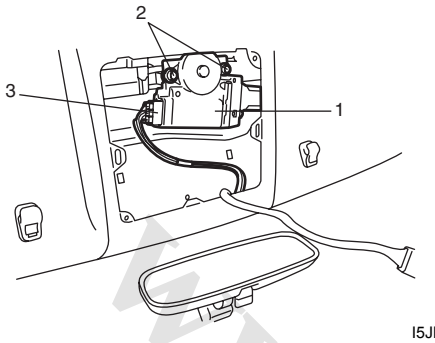


I5JB0A990006-01

### Installation

For installation, reverse removal procedure, noting the following points.

- Connect coupler to sliding roof motor securely.
- Initialize sliding roof position data referring to “How to reactivate the system to prevent being pinched by the sunroof” in Sunroof section of Owner’s manual.

## Sliding (Sun) Roof System Circuit and Motor Inspection

S5JB0A9906007

1) Check that sliding roof switch is in good condition referring to “Sliding (Sun) Roof Switch Inspection: ”.
2) Connect connector to sliding roof switch.
3) Disconnect connector from sliding roof motor.
4) Measure voltage and resistance between each terminals of sliding roof motor connector (1).
   If each voltage and/or resistance are within specified value, sliding roof system circuit is in good condition and proceed next step.
   If each voltage and/or resistance are out of specified value, repair sliding roof system circuit.

**Sliding roof system circuit specification with connector disconnected**

| Measurement terminal | Measurement condition | Reference value |
|---|---|---|
| 5(+) – 7(–) | Ignition switch turned OFF and ON | 10 – 14 V |
| 8(+) – 7(–) | Ignition switch turned ON | 10 – 14 V |
| 9 – 7 | Ignition switch turned OFF and sliding roof switch from OFF to “SLIDE OPEN” | Infinity ↓ 0 – 1 Ω |
| 10 – 7 | Ignition switch turned OFF and sliding roof switch from OFF to “TILT UP” | Infinity ↓ 0 – 1 Ω |
| 7 – vehicle body ground | Ignition switch turned OFF | 0 – 1 Ω |

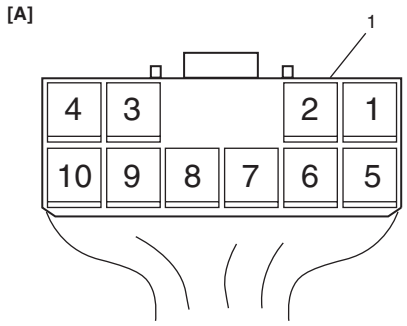


I5JB0A990007-01

[A]: Viewed from harness side

5) Connect connector to sliding roof motor (1).
6) Measure each voltage between terminals of sliding roof motor connector (2) with ignition switch ON.
   If each voltage is out of specified value, replace sliding roof motor.

**Sliding roof motor out put voltage**

| Measurement terminal | Measurement condition | Reference value |
|---|---|---|
| 9(+) – 7(–) | Sliding roof switch from OFF to “SLIDE OPEN” | 10 – 14 V (OFF) ↓ 0 V (“SLIDE OPEN”) |
| 10(+) – 7(–) | Sliding roof switch from OFF to “TILT UP” | 10 – 14 V (OFF) ↓ 0 V (“TILT UP”) |

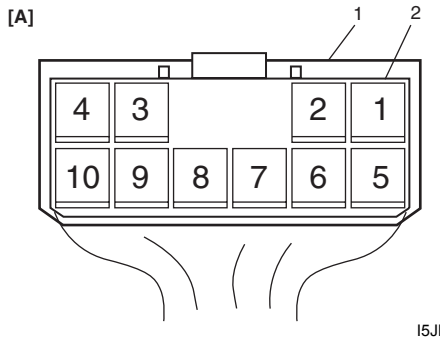


I5JB0A990008-01

[A]: Viewed from harness side

www.cargeek.ir

## Sliding (Sun) Roof Assembly Components

S5JB0A9906008

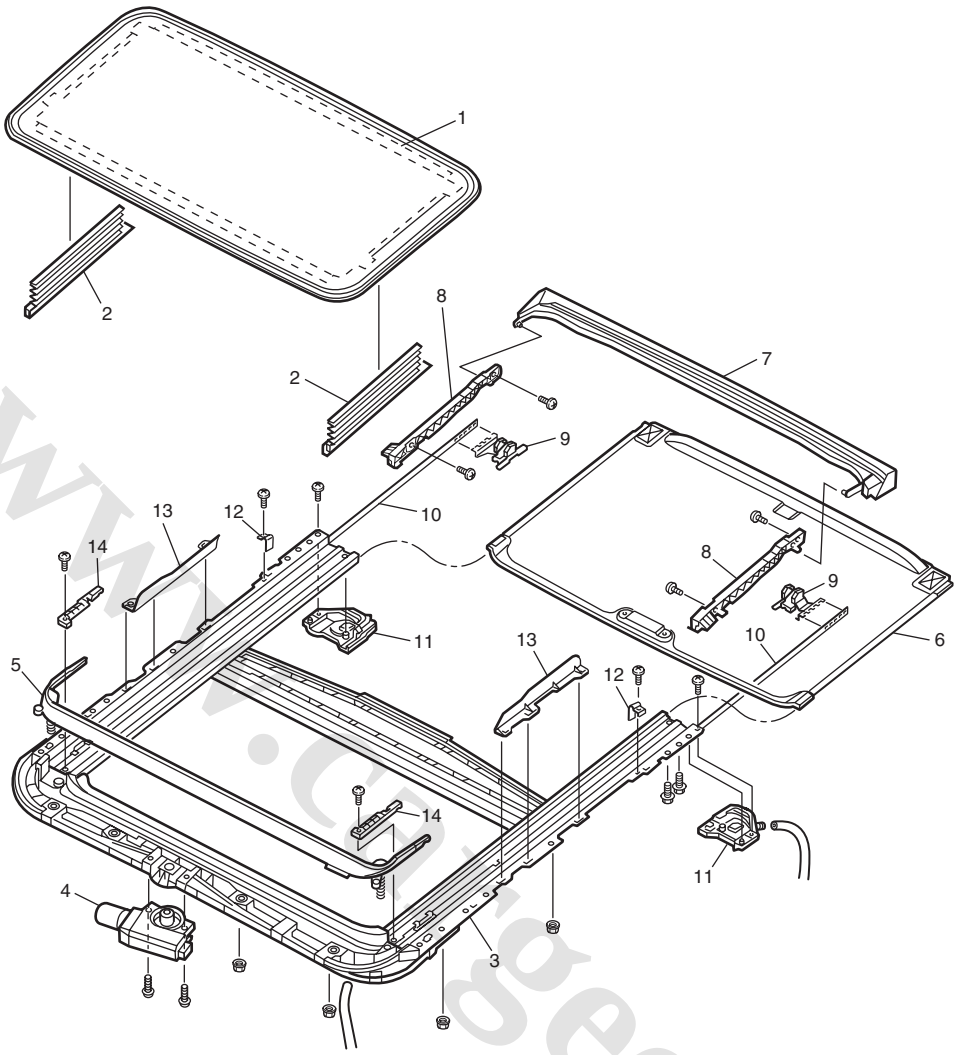


I5JB0A990009-02

| | | |
|---|---|---|
| 1. Sliding roof glass | 6. Sunshade | 11. No.1 peace |
| 2. Sliding roof cover | 7. Drip channel | 12. Rail stopper |
| 3. Sliding roof housing | 8. Panel bracket | 13. Housing cover |
| 4. Sliding roof motor | 9. Shoe | 14. Guide block |
| 5. Deflector | 10. Drive cable | |

www.cargeek.ir

 www.CarGeek.ir

## Sliding (Sun) Roof Assembly Removal and Installation

S5JB0A9906009

### Removal

1) Remove head lining referring to “Head Lining Removal and Installation: in Section 9H”.
2) Remove sliding roof glass referring to “Sliding (Sun) Roof Glass Removal and Installation: ”.
3) Disconnect drain hoses (1) connected to sliding roof assembly at 4 locations.

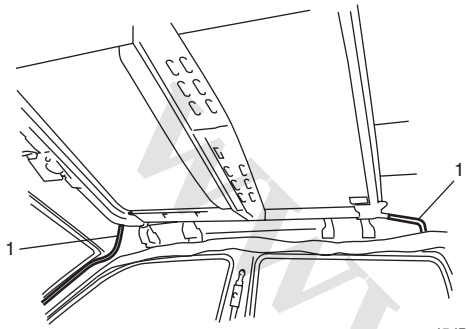


I5JB0A990010-01

4) Disconnect sliding roof motor (1) at coupler (2).

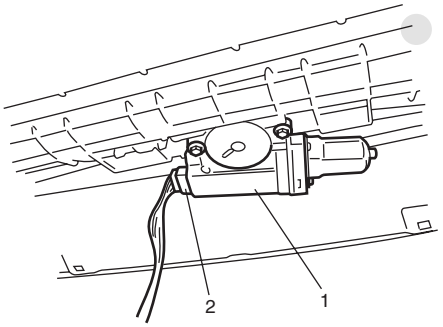


I5JB0A990011-01

5) Remove 8 nuts (1) and 4 bolts (2), then remove sliding roof assembly (3).

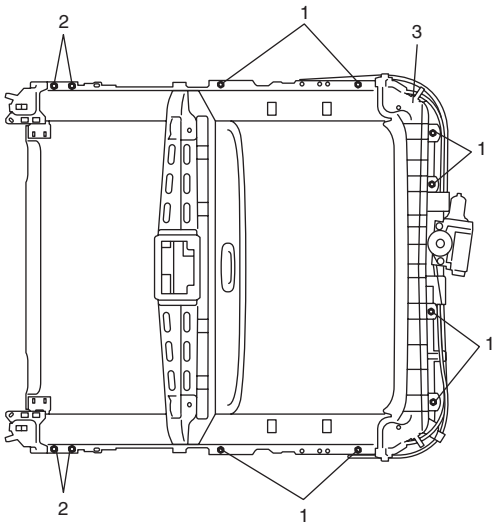


I5JB0A990012-01

### Installation

For installation, reverse removal procedure, noting the following points.

- Connect drain hoses (1) to sliding roof assembly at 4 locations. Clamp drain hose by each clamp securely.
- Pass rear drain hose between rib of outlet ventilator (2).

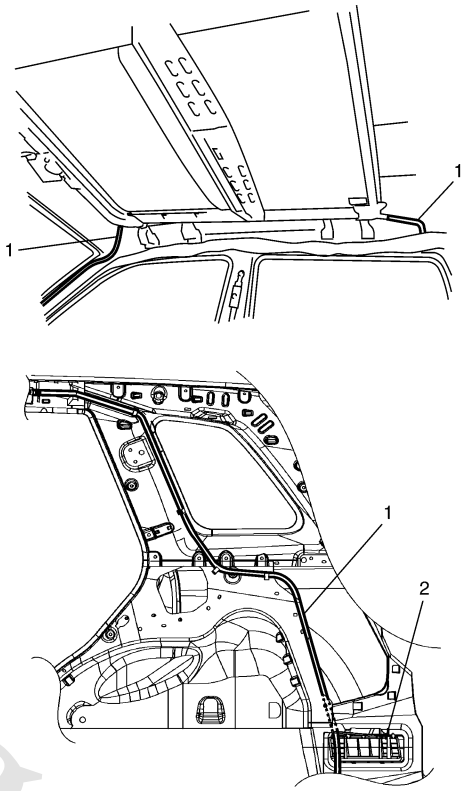


I5JB0A990013-01

- Initialize sliding roof position data referring to “How to reactivate the system to prevent being pinched by the sunroof” in Sunroof section of Owner’s manual.
- After reinstalling sliding roof assembly, be sure to make glass adjustment. (Refer to “Sliding (Sun) Roof Glass Adjustment: ”.)

www.cargeek.ir

www.CarGeek.ir


## Sliding (Sun) Roof Assembly Disassembly and Reassembly

S5JB0A9906010

### Disassembly

1) Remove sliding roof motor (1).

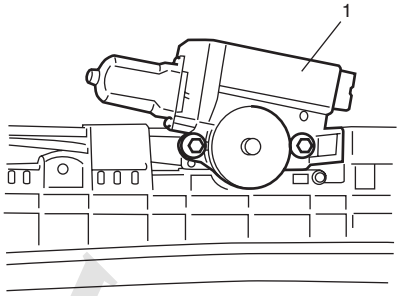


I5JB0A990014-01

2) Slide sunshade (1) to full-position.
3) Remove deflector (2) from holder (3) with holding deflector.

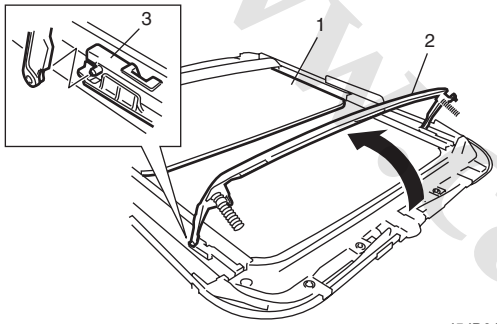


I5JB0A990015-01

4) Remove No.1 peaces (1) and then pull out sunshade (2) from guide rails (3).
5) Remove rail stoppers (4) from guide rails.

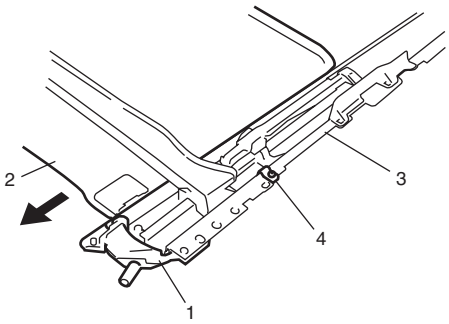


I5JB0A990016-01

6) Pull out drip channel (1), panel brackets (2), shoes (3) and drive cables (4) all together from guide rails.

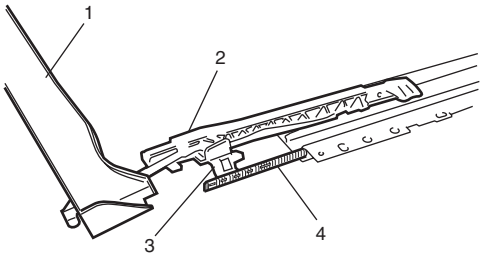


I5JB0A990017-01

7) Disassemble drip channel, panel brackets, shoes and drive cables.
8) Remove guide block (1) and housing covers (2) from rails.

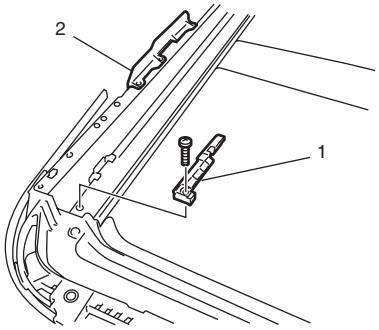


I5JB0A990018-01

### Reassembly

Reverse disassembly procedure for reassembly, noting the following.

- Check wear and damage of drive cables and sliding roof motor gear.
- Apply grease to sliding part.
- Slide shoes (1) to contact guide blocks (2) for positioning the sliding roof to tilt up position and install sliding roof motor.

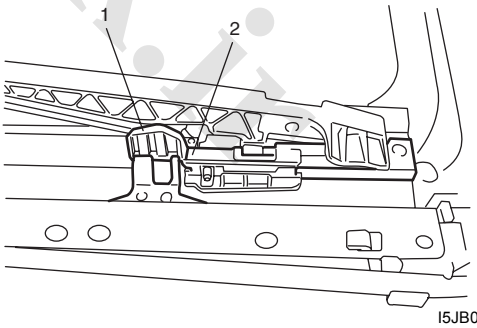


I5JB0A990019-01

www.cargeek.ir

www.CarGeek.ir

# Hood / Fenders / Doors

## Repair Instructions

### Hood Removal and Installation

S5JB0A9A06001

#### Removal

**⚠ CAUTION**

**Place cloth to prevent body from any damage.**

1) Remove hood silencer (4).
2) Disconnect window washer hose (1) from hood.
3) Remove 4 mounting bolts (3) to detach hood (2).

#### Installation

Reverse removal procedure noting the following.

- Apply sealant to contact face “A” of hood hinge.

  **“A”: Sealant 99000–31110 (SUZUKI Bond No.1215)**

- Adjust hood lock position if necessary referring to “Hood Inspection and Adjustment”.

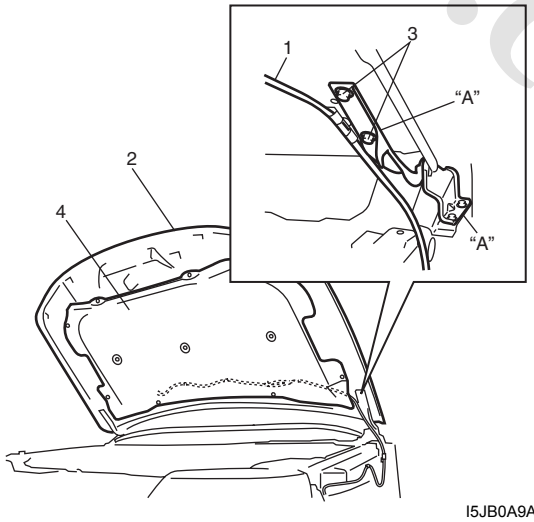


I5JB0A9A0001-01

### Hood Inspection and Adjustment

S5JB0A9A06002

#### Inspection

- Check that hood opens and closes smoothly and properly. Lubricate if necessary.
- Check that hood stops in the secondary latched position properly (preventing hood from opening freely) and that hood closes completely in the fully latched position.
- Adjust hood lock position, if necessary.

#### Adjustment

Adjust the following point:

- Hood position adjustment.
  Fore-and-aft and right-and-left adjustment.
  Adjust hood clearance by loosening hood mounting bolts. Refer to “Panel Clearance: in Section 9K”.
- Vertical adjustment
  If only one side (right or left) of hood is not level with front fender, make it level by tightening or loosening hood cushion (1).

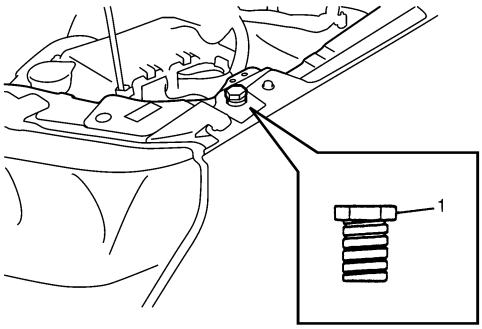


I5JB0A9A0002-01

- Hood lock position adjustment
  a. Loosen hood lock bolts.
  b. Adjust hood lock height position so the hood is locked without looseness.
  c. Tighten hood latch bolts to specified torque.

     **Tightening torque**
     **Hood latch bolt (a): 10 N·m (1.0 kgf-m, 7.5 lb-ft)**

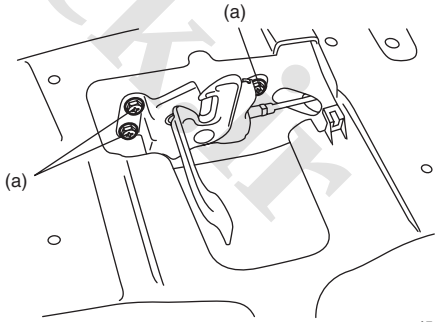


I5JB0A9A0003-01

  d. Make sure the hood is locked smoothly and securely.

www.cargeek.ir

www.CarGeek.ir


## Front Fender Components

S5JB0A9A06003

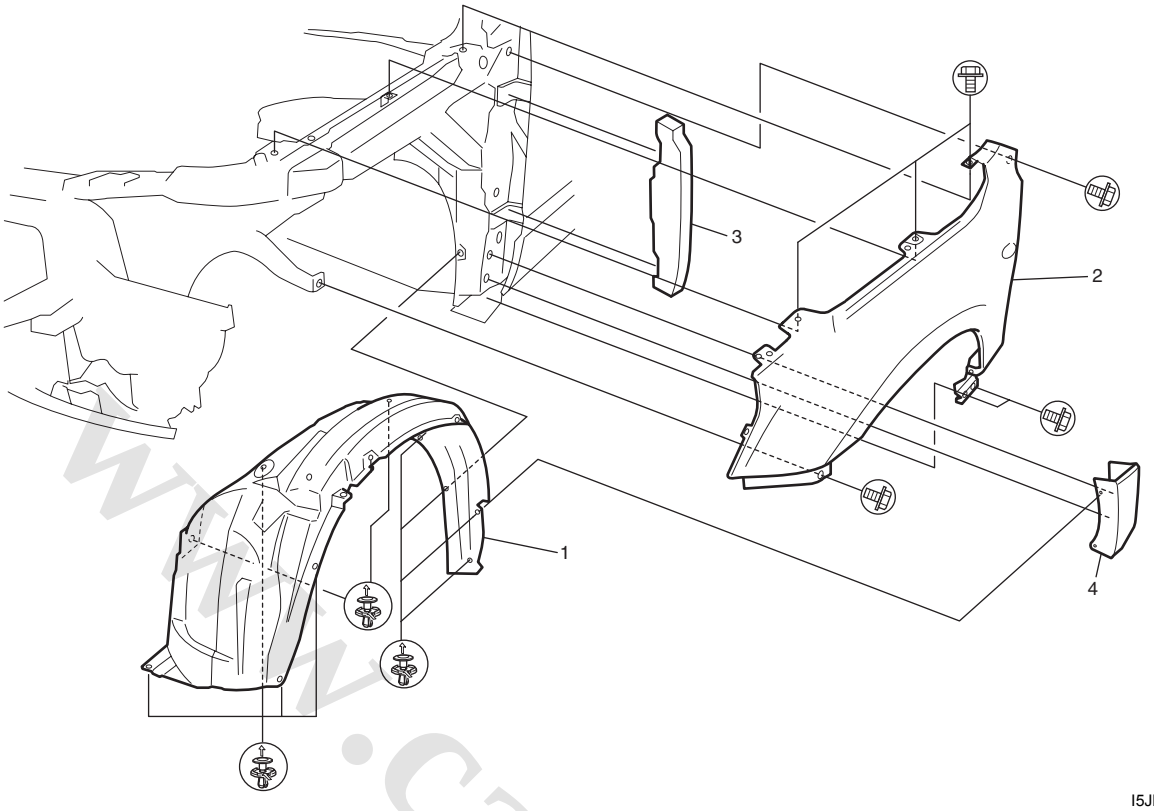


I5JB0A9A0004-02

| | |
|---|---|
| 1. Front fender lining | 3. Front fender rear pad |
| 2. Front fender | 4. Splash guard (if equipped) |

## Front Fender Removal and Installation

S5JB0A9A06004

### Removal

1) Remove splash guard (if equipped) referring to “Splash Guard Removal and Installation (If Equipped): in Section 9M”.
2) Remove front fender lining.
3) Remove front bumper referring to “Front Bumper Components: in Section 9K”.
4) Remove headlight assembly referring to “Headlight Housing Removal and Installation: in Section 9B”.
5) Remove cowl top garnishes referring to “Cowl Top Components: in Section 9K”
6) Disconnect connector from side turn signal lamp.
7) Remove front fender.

### Installation

Reverse removal procedure to install front fender noting the following instruction.

- If paint on fender bolt is peeled off, be sure to apply paint again.
- Adjust panel clearance referring to “Panel Clearance: in Section 9K”.

www.cargeek.ir

www.CarGeek.ir

## Front Door Assembly Components

S5JB0A9A06005

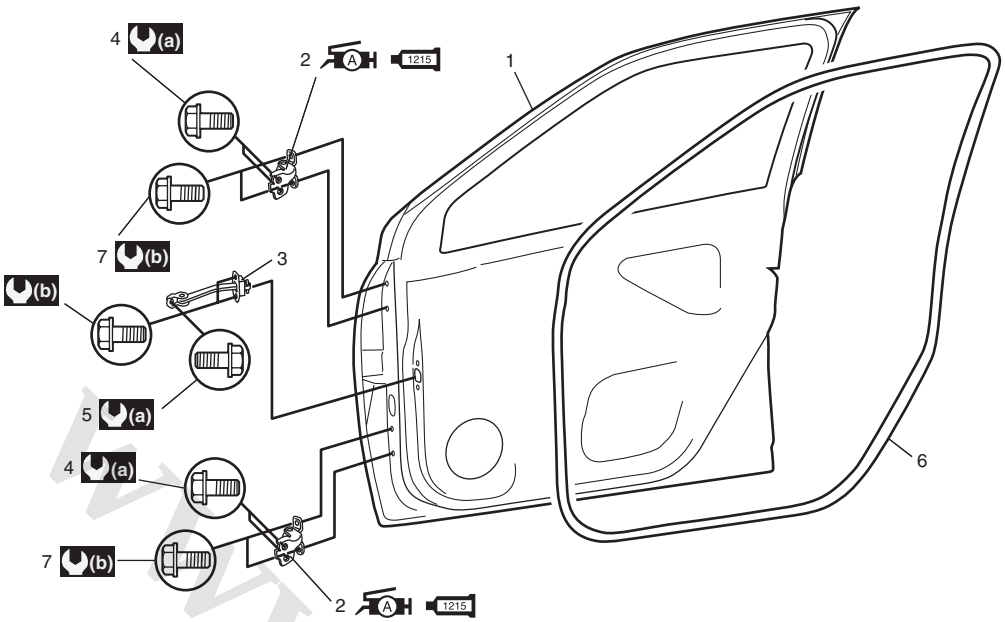


I5JB0A9A0005-01

| | | |
|---|---|---|
| 1. Door panel | 5. Door open stopper bolt | (b) : 23 N·m (2.3 kgf-m, 17.0 lb-ft) |
| A 1215 2. Door hinge<br>: Apply lithium grease 99000-25010 to rotating part.<br>: Apply sealant 99000-31110 to contact face. | 6. Front door opening weather-strip | |
| 3. Door open stopper | 7. Front door hinge bolt (door side) | |
| 4. Front door hinge bolt (body side) | (a) : 27 N·m (2.7 kgf-m, 19.5 lb-ft) | |

www.cargeek.ir

www.CarGeek.ir


## Front Door Assembly Removal and Installation

S5JB0A9A06006

### Removal

1) Remove front fender referring to “Front Fender Components: ”.
2) Disconnect door harness lead wires at each coupler.
3) Remove door open stopper (1).

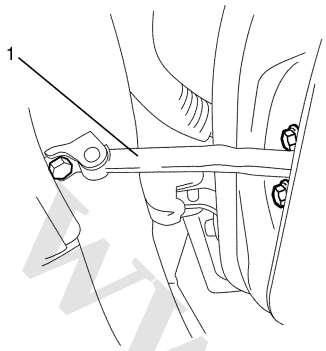


I4RS0A9A0005-01

4) Support door panel (1) using a jack (2) with rags (3) and a piece of wood (4) placed between jack (2) and panel (1) as shown.

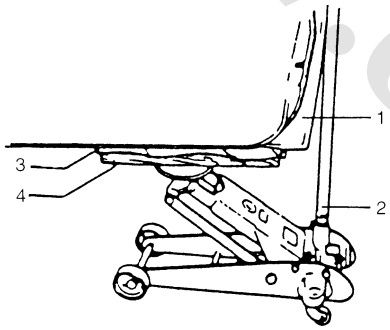


I2RH019A0003-01

5) Remove door assembly (1) by loosening hinge mounting bolts (2).

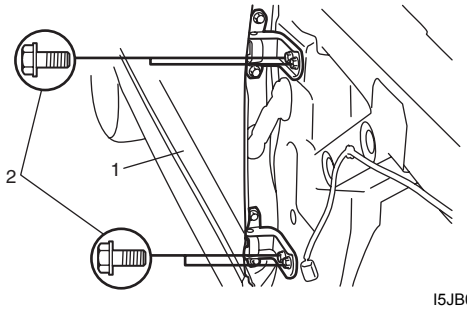


I5JB0A9A0006-01

### Installation

Reverse removal procedure to install door assembly noting the following instructions.

- When replacing door, coat replacement door inside with wax for proper anti-corrosion treatment. Refer to “Sealant Application Areas: in Section 9L”.
- Apply sealant to contact face “A” of hinge (1) and apply grease to rotating part “B” of hinge (1).

  **“A”: Sealant 99000–31110 (SUZUKI Bond No.1215)**
  **“B”: Grease 99000–25010 (SUZUKI Super Grease A)**

- Tighten hinge bolt to specified torque.

  **Tightening torque**
  **Door hinge mounting bolt (body side) (a): 27 N·m (2.7 kgf-m, 19.5 lb-ft)**
  **Door hinge mounting bolt (door side) (b): 23 N·m (2.3 kgf-m, 17.0 lb-ft)**

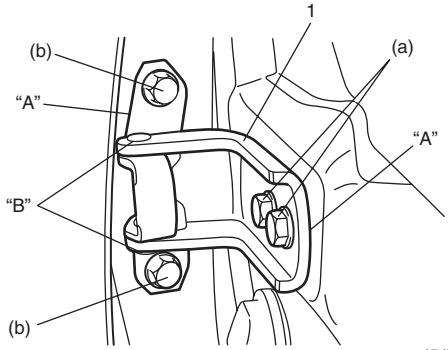


I5JB0A9A0007-01

- When door open stopper (1) is installed, make sure punch mark (2) is upward.

  **<u>Door open stopper installing direction</u>**
  **Left side door: L punch mark is upward**
  **Right side door: R punch mark is upward**

- Tighten door open stopper bolt (3) to specified torque.

  **Tightening torque**
  **Door open stopper bolt (a): 27 N·m (2.7 kgf-m, 19.5 lb-ft)**

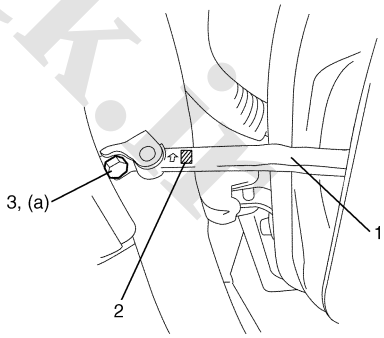


I4RS0A9A0008-01

- Adjust door latch striker position referring to “Front Door Lock Assembly Removal and Installation: in Section 9F”.
- Adjust front door cushion so that door becomes flush with side body.
- After installation, open and close the door to check looseness.

www.cargeek.ir

www.CarGeek.ir

## Rear Door Assembly Components

S5JB0A9A06007

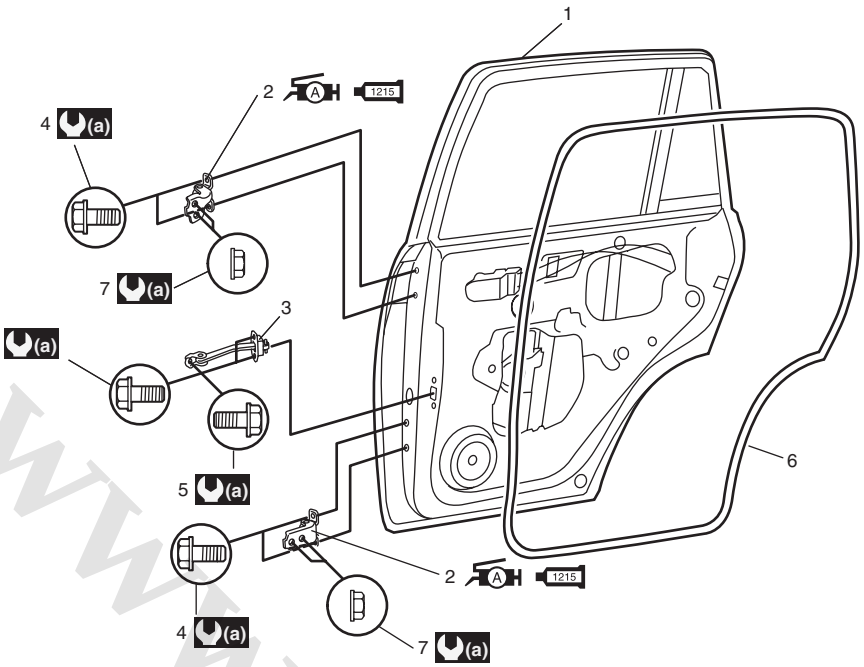


I5JB0A9A0008-01

| | | |
|---|---|---|
| 1. Door panel | 4. Rear door hinge bolt | 7. Rear door hinge nut |
| 1215 2. Door hinge<br>: Apply lithium grease 99000-25010 to rotating part.<br>: Apply sealant 99000-31110 to contact face. | 5. Door open stopper bolt | (a) : 23 N·m (2.3 kgf-m, 17.0 lb-ft) |
| 3. Door open stopper | 6. Rear door opening weather-strip | |

## Rear Door Assembly Removal and Installation

S5JB0A9A06008

Refer to “Front Door Assembly Removal and Installation: ” as removal and installation procedures are basically the same. However, note the following.

- Tighten rear door hinge bolts and nuts to specified torque referring to “Rear Door Assembly Components”.

www.cargeek.ir

www.CarGeek.ir


## Rear End Door Assembly Components

S5JB0A9A06009

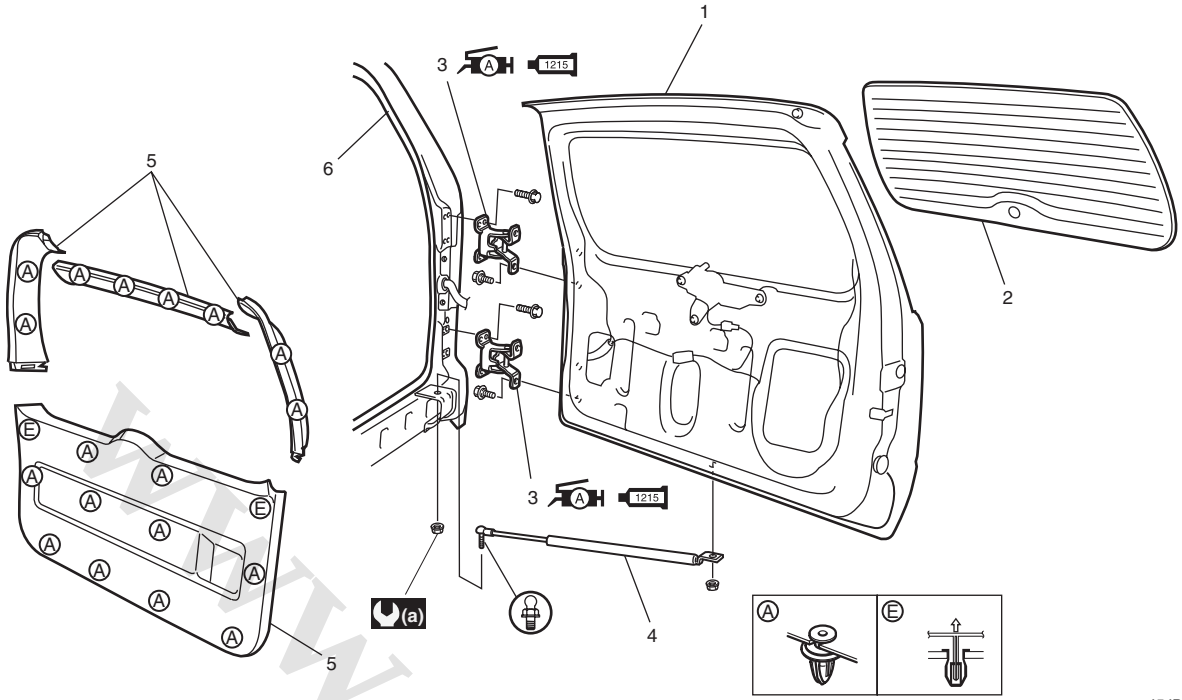


I5JB0A9A0009-01

| | | |
|---|---|---|
| 1. Rear end door panel assembly | 4. Rear end door balancer | (a) : 23 N·m (2.3 kgf-m, 17.0 lb-ft) |
| 2. Rear end door window glass | 5. Rear end door trim | |
| 1215 3. Rear end door hinge<br>: Apply lithium grease 99000-25010 to door hinge moving section.<br>: Apply sealant 99000-31110 to contact face. | 6. Rear end door opening wether-strip | |

www.cargeek.ir

www.CarGeek.ir

## Rear End Door Assembly Removal and Installation

S5JB0A9A06010

### Removal

1) Remove rear end door trims (1).
2) Remove spare tire.
3) Disconnect rear end door harness coupler (2) and washer hose (3).
4) Remove rear end door balancer (4).
5) Remove door hinge bolts (5) and remove rear end door assembly (6).

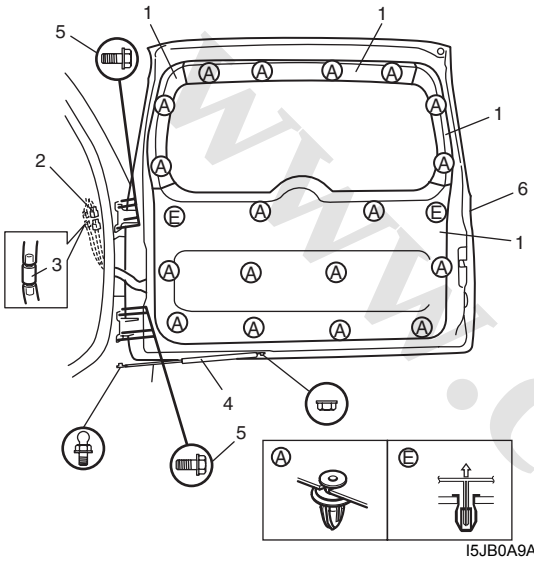


I5JB0A9A0010-01

**⚠ WARNING**

**Handling of Rear End Door Balancer (Damper)**

- **Handle balancer carefully. Do not scar or scratch exposed surface of its piston rod, and never allow any paint or oil to stick to its surface.**
- **Do not turn piston rod with balancer fully extended.**
- **Do not disassemble balancer (1) because its cylinder is filled with gas.**

**Discarding of Rear End Door Balancer (Damper)**

- **The gas itself in balancer is harmless but it may issue out of the hole together with chips generated by the drill (2). Therefore, be sure to wear goggle when drilling.**
- **Using a 2 to 3 mm (0.08 to 0.12 in.) drill (2), make a hole to remove gas inside as shown before discarding.**

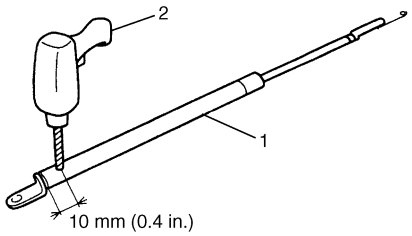


I2RH019A0010-01

### Installation

Reverse removal procedure noting the following.

- Tighten rear end door hinge bolts and balancer nut to specified torque referring to “Rear End Door Assembly Components: ”
- Secure wiring harness (1).

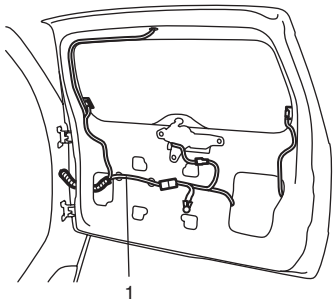


I5JB0A9A0011-01

- Adjust door latch striker position by referring to “Rear End Door Lock Assembly Removal and Installation: in Section 9F”.
- Adjust door cushion so that door contacts body when closed.
- Apply sealant to contact face “A” of door hinge (1) and apply grease to rotating part “B” of hinge (1).

  **“A”: Sealant 99000–31110 (SUZUKI Bond No.1215)**
  **“B”: Grease 99000–25010 (SUZUKI Super Grease A)**

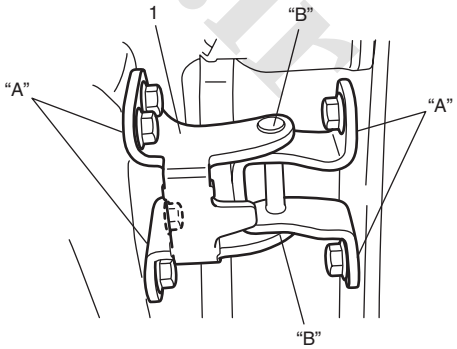


I5JB0A9A0012-01

www.cargeek.ir

www.CarGeek.ir


# Specifications

## Tightening Torque Specifications

S5JB0A9A07001

| Fastening part | Tightening torque | | | Note |
|---|---|---|---|---|
| | N·m | kgf-m | lb-ft | |
| Hood latch bolt | 10 | 1.0 | 7.5 | ☞ |
| Door hinge mounting bolt (body side) | 27 | 2.7 | 19.5 | ☞ |
| Door hinge mounting bolt (door side) | 23 | 2.3 | 17.0 | ☞ |
| Door open stopper bolt | 27 | 2.7 | 19.5 | ☞ |

**NOTE**

**The specified tightening torque is also described in the following.**
**“Front Door Assembly Components: ”**
**“Rear Door Assembly Components: ”**
**“Rear End Door Assembly Components: ”**

**Reference:**
For the tightening torque of fastener not specified in this section, refer to “Fastener Information:  in Section 0A”.

# Special Tools and Equipment

## Recommended Service Material

S5JB0A9A08001

| Material | SUZUKI recommended product or Specification | | Note |
|---|---|---|---|
| Grease | SUZUKI Super Grease A | P/No.: 99000–25010 | ☞ / ☞ |
| Sealant | SUZUKI Bond No.1215 | P/No.: 99000–31110 | ☞ / ☞ / ☞ |

**NOTE**

**Required service material is also described in the following.**
**“Front Door Assembly Components: ”**
**“Rear Door Assembly Components: ”**
**“Rear End Door Assembly Components: ”**

www.cargeek.ir

www.CarGeek.ir

# Body Structure

## Repair Instructions

### Front Bumper Components

S5JB0A9B06001

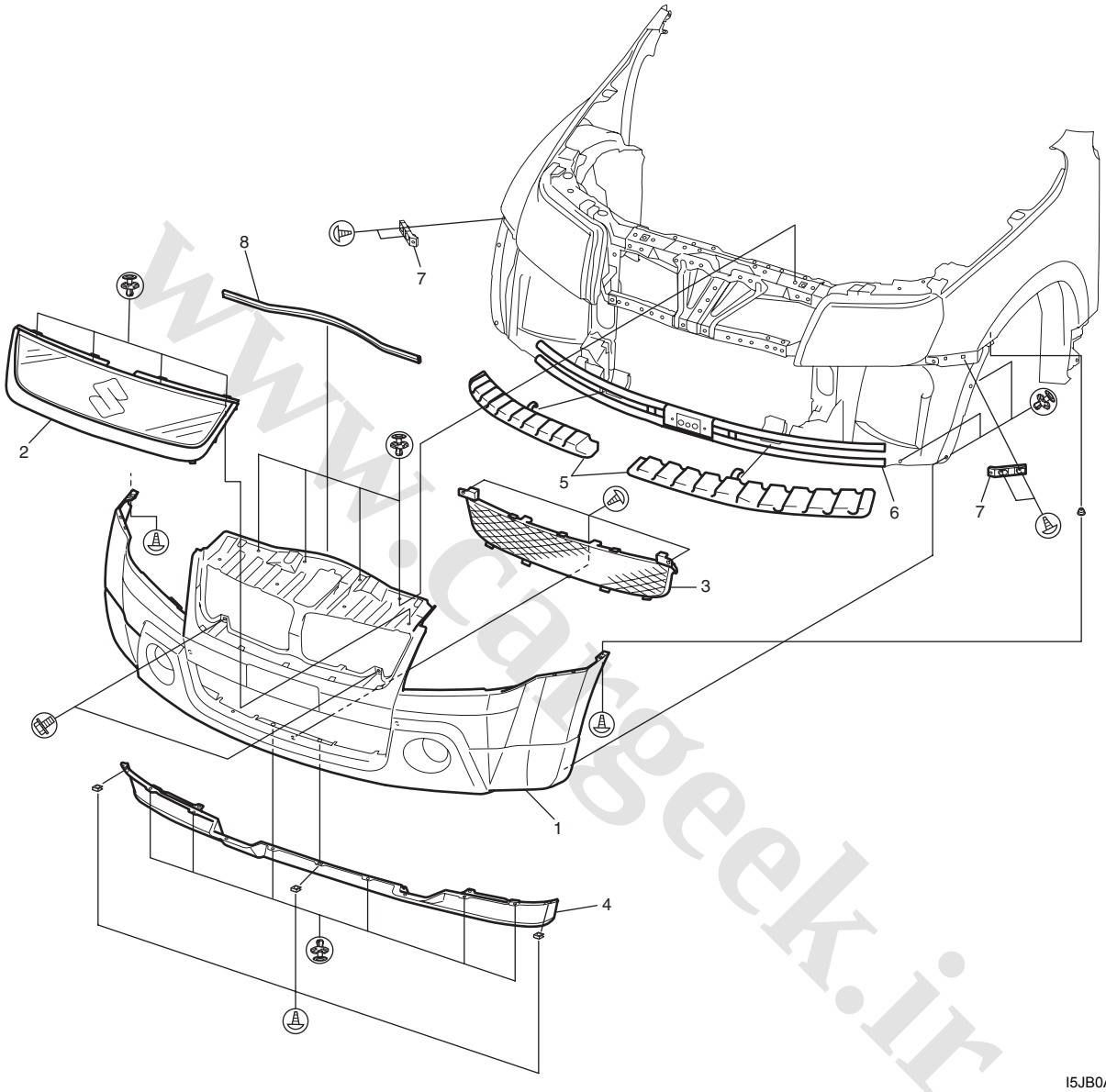


I5JB0A9B0001-02

| | | | |
|---|---|---|---|
| 1. Front bumper | 3. Front bumper net | 5. Front bumper absorber | 7. Front bumper holder |
| 2. Radiator grill | 4. Front air dam skirt | 6. Front bumper member | 8. Seal |

www.cargeek.ir

www.CarGeek.ir


## Rear Bumper Components

S5JB0A9B06004

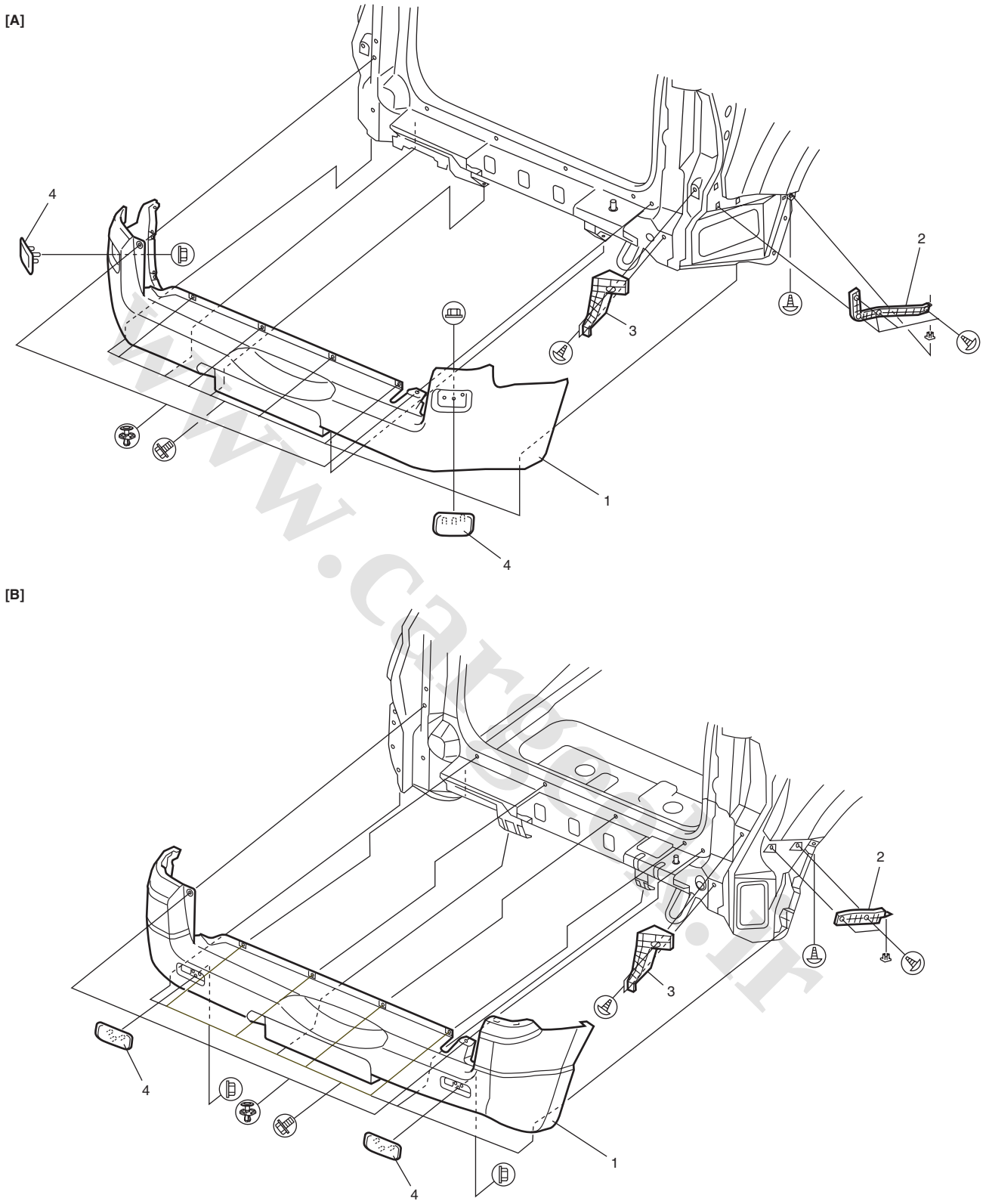


I5JB0A9B0002-01

| | | |
|---|---|---|
| [A]: 5 door model | 1. Rear bumper | 3. Rear bumper No.2 holder |
| [B]: 3 door model | 2. Rear bumper No.1 holder | 4. Reflector |

www.cargeek.ir

www.CarGeek.ir

## Cowl Top Components

S5JB0A9B06003

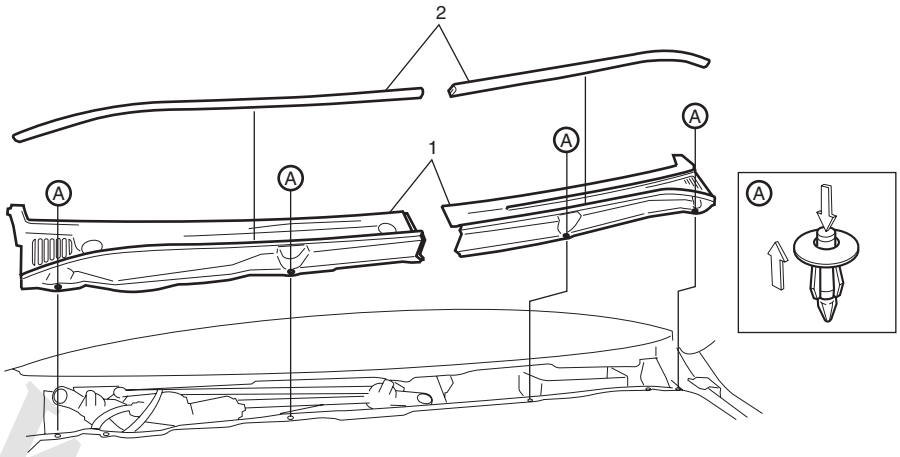


I5JB0A9B0003-01

| | |
|---|---|
| 1. | Cowl top garnish |
| 2. | Hood rear seal |

www.cargeek.ir

www.cargeek.ir

www.CarGeek.ir


# Specifications

## Body Dimensions

S5JB0A9B07001

### Engine Room

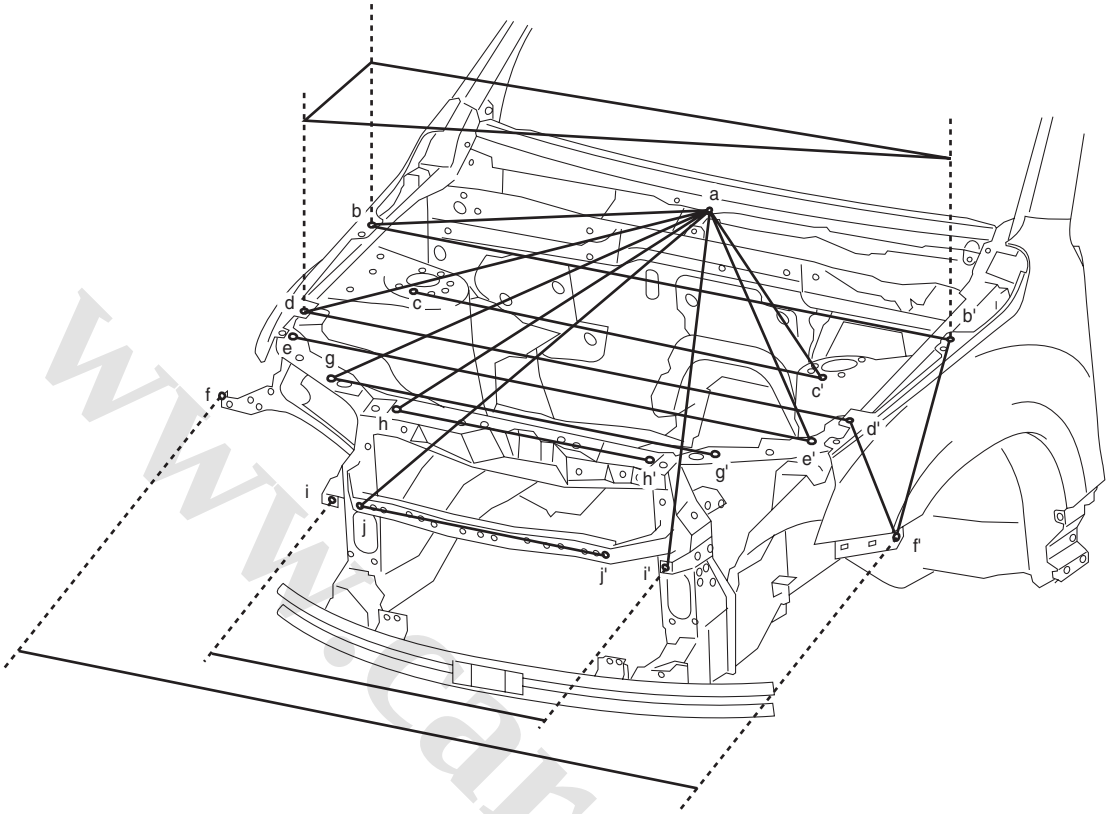


I5JB0A9B0004-01

| | | |
|---|---|---|
| a. Cowl top installation center hole | e (e'). Headlight installation hole | i (i'). Headlight installation hole |
| b (b'). Front fender installation hole | f (f'). Front fender installation hole | j (j'). Front upper member installation hole |
| c (c'). Jig hole (ϕ 8 mm) | g (g'). Headlight installation hole | |
| d (d'). Front fender installation hole | h (h'). Hood lock member installation hole | |

**Hole to hole distance**

| | | |
|---|---|---|
| **a-b(b'): 792 mm (31.18 in.)** | **a-j(j'): 1111 mm (43.74 in.)** | **d(d')-f(f'): 277 mm (10.91 in.)** |
| **a-c(c'): 697 mm (27.44 in.)** | **b-b': 1512 mm (59.53 in.)** | **e-e': 1384 mm (54.49 in.)** |
| **a-d(d'): 937 mm (36.89 in.)** | **b(b')-d(d'): 375 mm (14.76 in.)** | **f-f': 1750 mm (68.90 in.)** |
| **a-e(e'): 982 mm (38.66 in.)** | **b(b')-f(f'): 535 mm (21.06 in.)** | **g-g': 980 mm (38.58 in.)** |
| **a-g(g'): 969 mm (38.15 in.)** | **c-c': 1089 mm (42.87 in.)** | **h-h': 662 mm (26.06 in.)** |
| **a-h(h'): 910 mm (35.83 in.)** | **d-b': 1519 mm (59.80 in.)** | **i-i': 865 mm (34.06 in.)** |
| **a-i(i'): 1110 mm (43.70 in.)** | **d-d': 1432 mm (56.38 in.)** | **j-j': 630 mm (24.80 in.)** |

www.cargeek.ir

www.CarGeek.ir

## Rear End Door

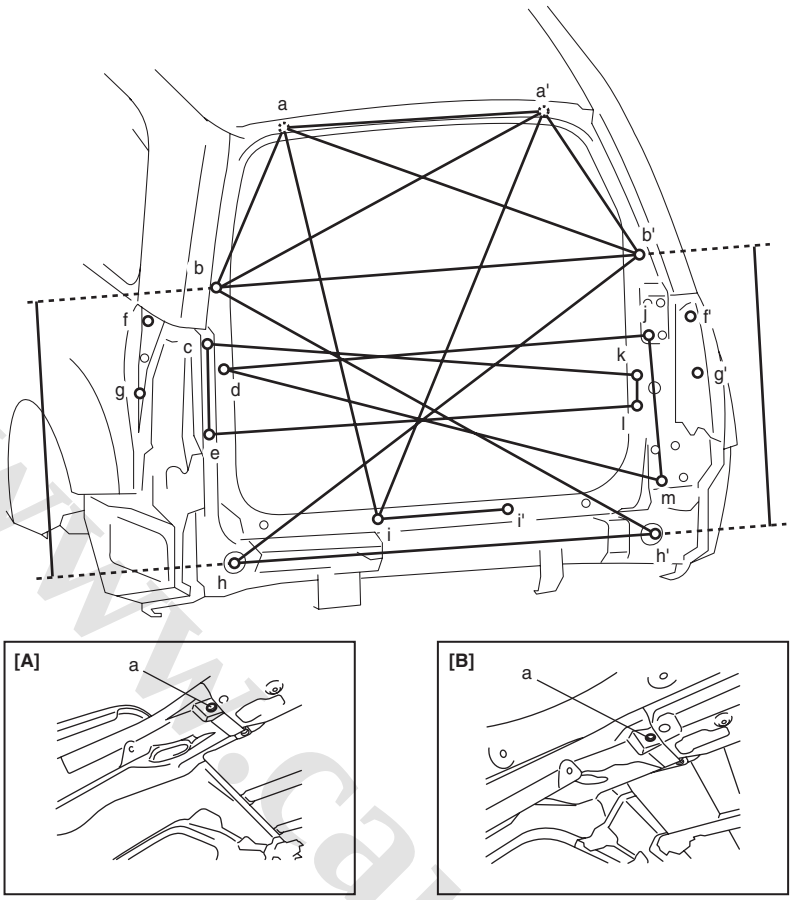


I5JB0A9B0005-01

| | | |
|---|---|---|
| [A]: 5 door model | c (c'). Rear combination lamp installation hole | g (g'). Rear combination lamp clip installation hole |
| [B]: 3 door model | d (d'). Rear end door switch installation hole | h (h'). Jig hole (ϕ 15 mm) |
| a (a'). Roof back inner panel bolt installation hole | e (e'). Rear combination lamp installation hole | i (i'). Rear bumper installation hole |
| b (b'). Jig hole (ϕ 15 mm) | f (f'). Rear combination lamp clip installation hole | |

### Hole to hole distance for 5 door model

| | | |
|---|---|---|
| a-a': 718 mm (28.27 in.) | b-h: 729 mm (28.70 in.) | e-l: 1208 mm (47.56 in.) |
| a-b: 436 mm (17.17 in.) | b-h': 1355 mm (53.35 in.) | f-f': 1491 mm (58.70 in.) |
| a-b': 1002 mm (39.45 in.) | b'-h: 1347 mm (53.03 in.) | g-g': 1548 mm (60.94 in.) |
| a-i: 1019 mm (40.12 in.) | b'-h': 727 mm (28.62 in.) | h-h': 1138 mm (44.80 in.) |
| a'-b: 1006 mm (39.61 in.) | c-e: 264 mm (10.39 in.) | i-i': 300 mm (11.81 in.) |
| a'-b': 438 mm (17.24 in.) | c-k: 1214 mm (47.80 in.) | j-m: 385 mm (15.16 in.) |
| a'-i: 1120 mm (44.09 in.) | d-j: 1163 mm (45.79 in.) | k-l: 145 mm (57.09 in.) |
| b-b': 1138 mm (44.80 in.) | d-m: 1213 mm (47.76 in.) | |

### Hole to hole distance for 3 door model

| | | |
|---|---|---|
| a-a': 718 mm (28.27 in.) | b-h: 729 mm (28.70 in.) | e-l: 1208 mm (47.56 in.) |
| a-b: 436 mm (17.17 in.) | b-h': 1355 mm (53.35 in.) | f-f': 1491 mm (58.70 in.) |
| a-b': 1002 mm (39.45 in.) | b'-h: 1347 mm (53.03 in.) | g-g': 1548 mm (60.94 in.) |
| a-i: 1019 mm (40.12 in.) | b'-h': 727 mm (28.62 in.) | h-h': 1138 mm (44.80 in.) |
| a'-b: 1006 mm (39.61 in.) | c-e: 264 mm (10.39 in.) | i-i': 300 mm (11.81 in.) |
| a'-b': 438 mm (17.24 in.) | c-k: 1214 mm (47.80 in.) | j-m: 385 mm (15.16 in.) |
| a'-i: 1120 mm (44.09 in.) | d-j: 1163 mm (45.79 in.) | k-l: 145 mm (57.09 in.) |
| b-b': 1138 mm (44.80 in.) | d-m: 1213 mm (47.76 in.) | |

www.cargeek.ir

www.CarGeek.ir


## Side Body

### 5 door model

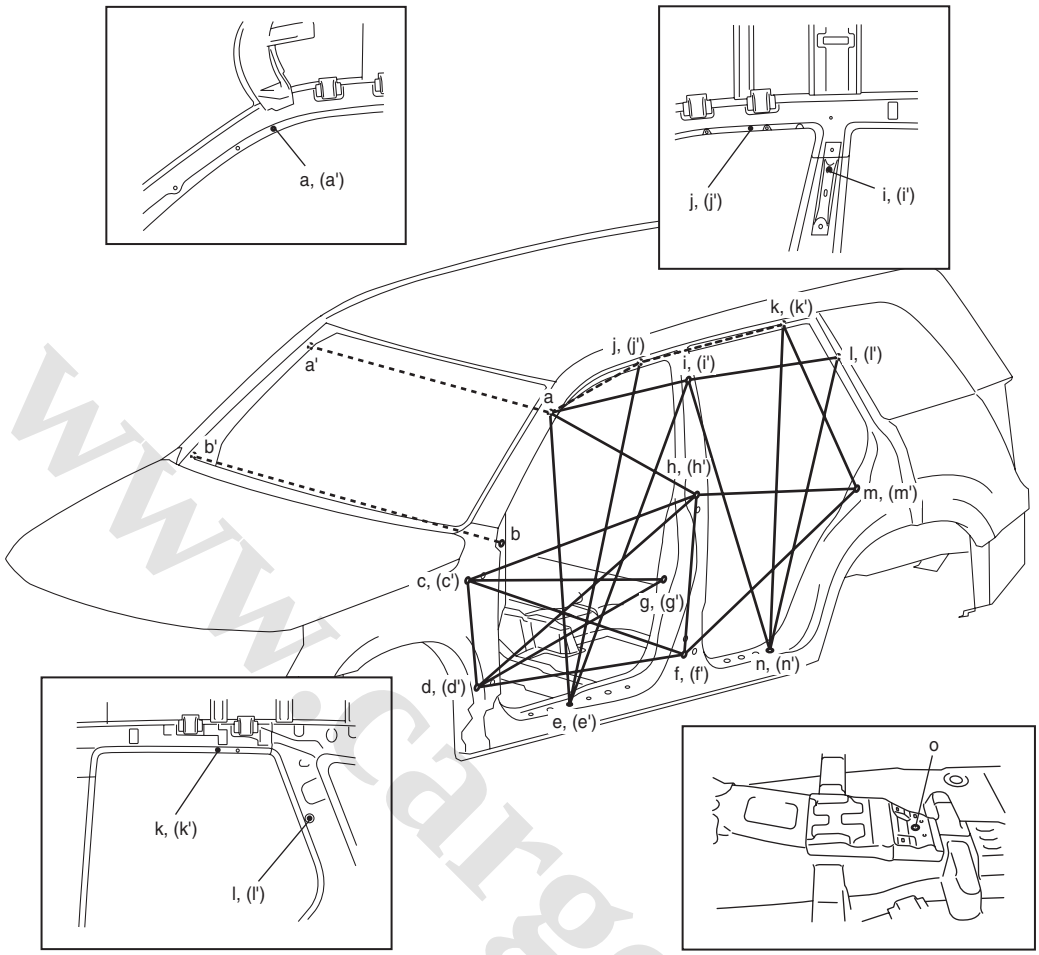


I5JB0A9B0006-01

| | | |
|---|---|---|
| a (a'). Jig hole (ϕ 8 mm) | f (f'). Rear door lower hinge installation front side hole | k (k'). Jig hole (ϕ 8 mm) |
| b (b'). Steering support member installation hole | g (g'). Front door switch installation hole | l (l'). Rear quarter upper trim installation hole |
| c (c'). Front door upper hinge installation front side hole | h (h'). Rear door upper hinge installation upper side hole | m (m'). Rear door switch installation hole |
| d (d'). Front door lower hinge installation front side hole | i (i'). Jig hole (ϕ 8 mm) | n (n'). Rear side shill scuff installation hole |
| e (e'). Front side shill scuff installation hole | j (j'). Jig hole (ϕ 8 mm) | o. Jig hole (ϕ 10 mm) |

### Hole to hole distance

| | | |
|---|---|---|
| a-a': 1248 mm (49.13 in.) | d(d')-f(f'): 1085 mm (42.72 in.) | i-i': 1302 mm (51.26 in.) |
| a(a')-e(e'): 1093 mm (43.03 in.) | d(d')-g(g'): 1081 mm (42.56 in.) | i(i')-n(n'): 1063 mm (41.85 in.) |
| a(a')-h(h'): 731 mm (28.78 in.) | d(d')-h(h'): 1226 mm (44.33 in.) | i(i')-l(l'): 833 mm (32.80 in.) |
| a(a')-i(i'): 573 mm (22.56 in.) | e-e': 1567 mm (61.69 in.) | j-j': 1205 mm (47.44 in.) |
| a(a')-j(j'): 340 mm (13.39 in.) | e(e')-i(i'): 1248 mm (49.13 in.) | j(j')-k(k'): 753 mm (29.65 in.) |
| b-b': 1506 mm (59.29 in.) | e(e')-j(j'): 1239 mm (48.78 in.) | k-k': 1190 mm (46.85 in.) |
| c-c': 1594 mm (62.76 in.) | f-(f'): 1621 mm (63.82 in.) | k(k')-m(m'): 713 mm (28.07 in.) |
| c (c')-d(d'): 345 mm (13.58 in.) | f(f')-h(h'): 391 mm (15.39 in.) | k(k')-n(n'): 1171 mm (46.10 in.) |
| c(c')-f(f'): 1123 mm (44.21 in.) | f(f')-m(m'): 979 mm (38.54 in.) | l-l': 1329 mm (52.32 in.) |
| c(c')-g(g'): 1149 mm (45.24 in.) | g-g': 1472 mm (57.95 in.) | l(l')-n(n'): 1069 mm (42.09 in.) |
| c(c')-h(h'): 1148 mm (45.20 in.) | h-h': 1580 mm (62.20 in.) | m-m': 1476 mm (58.11 in.) |
| d-d': 1630 mm (64.17 in.) | h(h')-m(m'): 859 mm (33.82 in.) | n-n': 1567 mm (61.69 in.) |

**NOTE**

**Use jig hole (o) as datum point to check symmetry of body structure.**

www.cargeek.ir

www.CarGeek.ir

**3 door model**

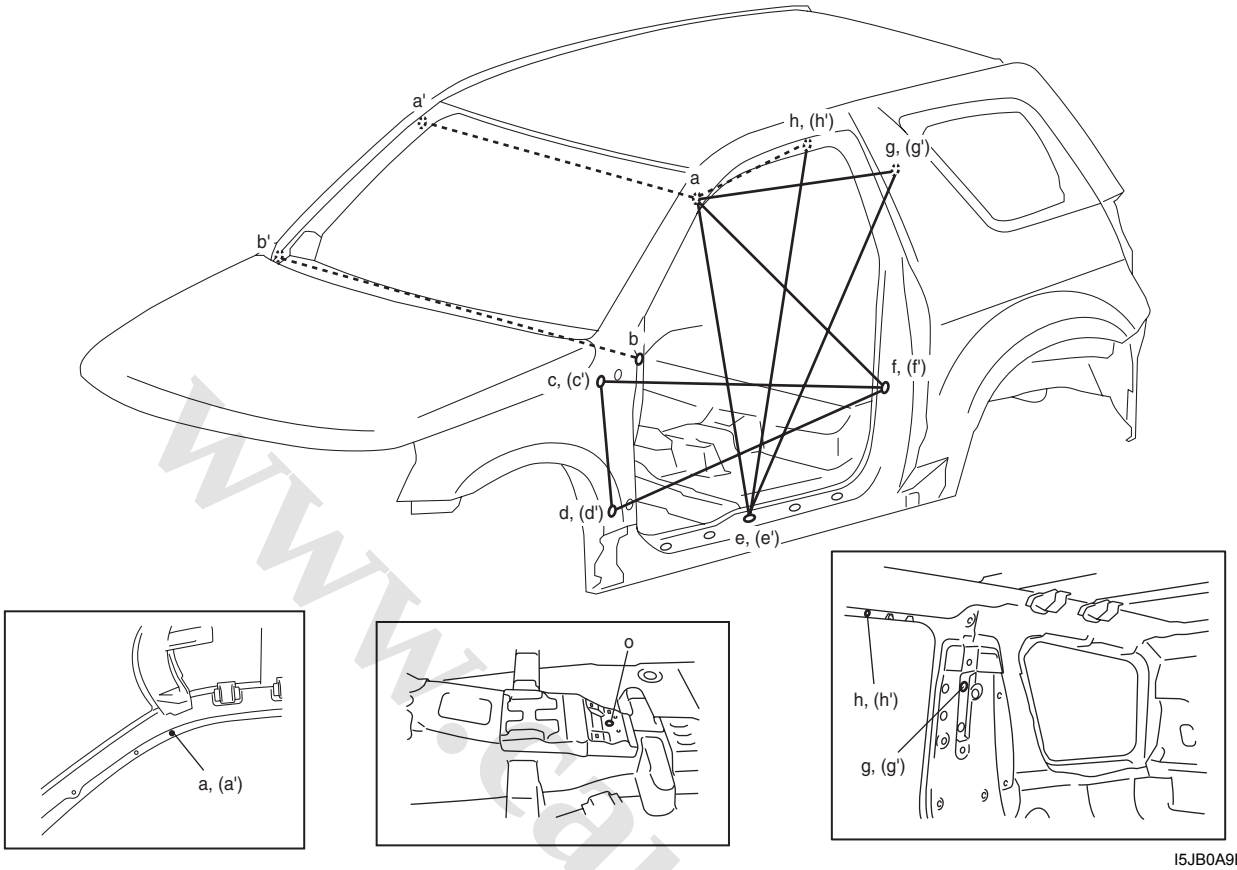


I5JB0A9B0007-01

| | | |
|---|---|---|
| a (a'). Jig hole (ϕ 8 mm) | d (d'). Door lower hinge installation front side hole | g (g'). Jig hole (ϕ 8 mm) |
| b (b'). Steering support member installation hole | e (e'). Side shill scuff installation hole | h (h'). Jig hole (ϕ 8 mm) |
| c (c'). Door upper hinge installation front side hole | f (f'). Door switch installation hole | |

## Hole to hole distance

| | | |
|---|---|---|
| **a-a': 1248 mm (49.13 in.)** | **c-c': 1593 mm (62.72 in.)** | **e(e')-h(h'): 1183 mm (46.57 in.)** |
| **a(a')-e(e'): 1064 mm (41.89 in.)** | **c(c')-d(d'): 345 mm (13.58 in.)** | **f-f': 1467 mm (57.76 in.)** |
| **a(a')-f(f'): 937 mm (36.89 in.)** | **c(c')-f(f'): 1298 mm (51.10 in.)** | **g-g': 1337 mm (52.64 in.)** |
| **a(a')-g(g'): 708 mm (27.87 in.)** | **d-d': 1630 mm (64.17 in.)** | **h-h': 1207 mm (47.52 in.)** |
| **a(a')-h(h'): 355 mm (13.98 in.)** | **e-e': 1567 mm (61.69 in.)** | |
| **b-b': 1506 mm (59.29 in.)** | **e(e')-g(g'): 1217 mm (47.91 in.)** | |

**NOTE**

**Use jig hole (o) as datum point to check symmetry of body structure.**

www.cargeek.ir

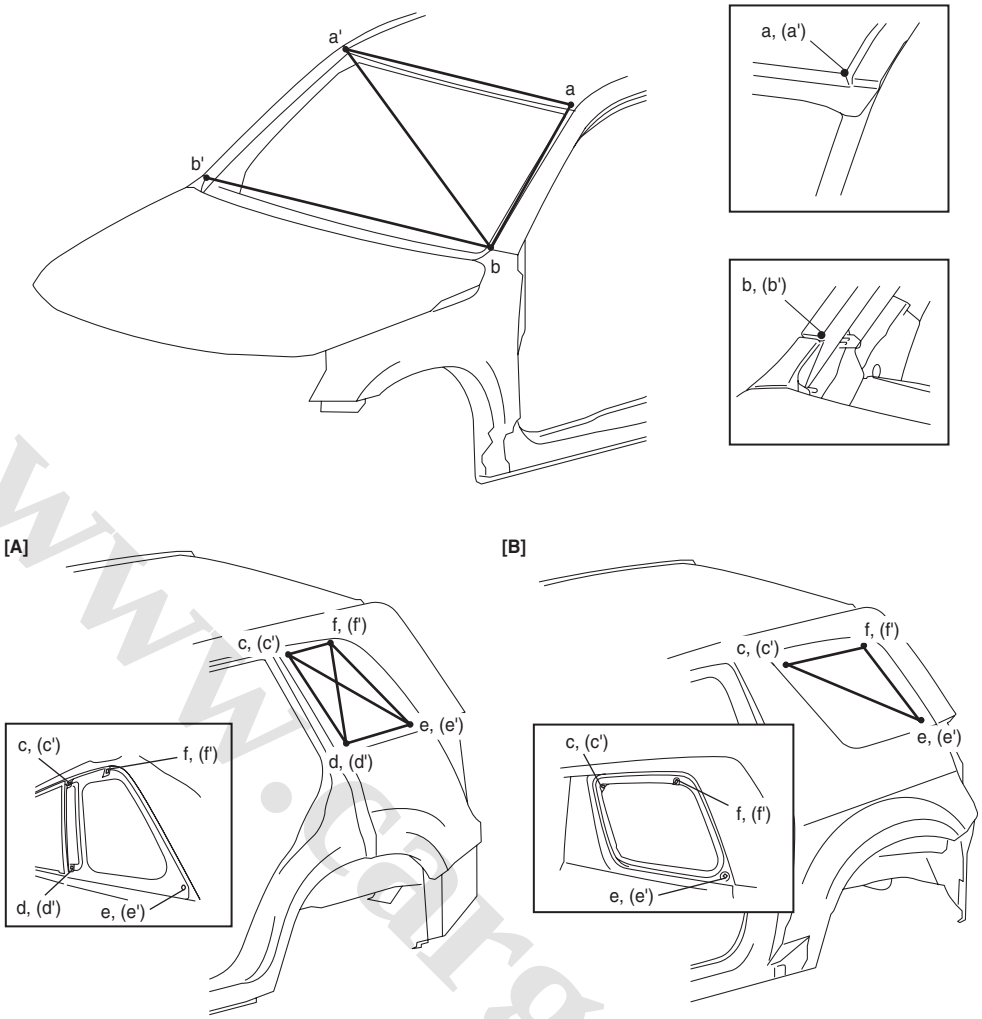


I5JB0A9B0008-01

| | | |
|---|---|---|
| [A]: 5 door model | b (b'). Front pillar end corner | e (e'). Rear quarter window installation hole |
| [B]: 3 door model | c (c'). Rear quarter window installation hole | f (f'). Rear quarter window installation hole |
| a (a'). Roof panel end corner | d (d'). Rear quarter window installation hole | |

**Hole to hole distance for 5 door model**

| | | |
|---|---|---|
| **a-a': 1131 mm (44.53 in.)** | **c(c')-d(d'): 409 mm (16.10 in.)** | **d(d')-f(f'): 383 mm (15.08 in.)** |
| **a-b: 717 mm (28.23 in.)** | **c(c')-e(e'): 710 mm (27.95 in.)** | **e-e': 1458 mm (57.40 in.)** |
| **a'-b: 1478 mm (58.19 in.)** | **c(c')-f(f'): 268 mm (10.55 in.)** | **e(e')-f(f'): 496 mm (19.53 in.)** |
| **b-b': 1475 mm (58.07 in.)** | **d-d': 1509 mm (59.41 in.)** | **f-f': 1293 mm (48.78 in.)** |
| **c-c': 1252 mm (49.29 in.)** | **d(d')-e(e'): 443 mm (17.44 in.)** | |

**Hole to hole distance for 3 door model**

| | | |
|---|---|---|
| **a-a': 1128 mm (44.41 in.)** | **c-c': 1301 mm (51.22 in.)** | **e(e')-f(f'): 418 mm (16.46 in.)** |
| **a-b: 717 mm (28.23 in.)** | **c(c')-e(e'): 756 mm (29.76 in.)** | **f-f': 1249 mm (49.17 in.)** |
| **a'-b: 1478 mm (58.19 in.)** | **c(c')-f(f'): 433 mm (17.05 in.)** | |
| **b-b': 1478 mm (58.19 in.)** | **e-e': 1480 mm (58.27 in.)** | |

www.cargeek.ir

www.CarGeek.ir

## Under Body

### 5 door model

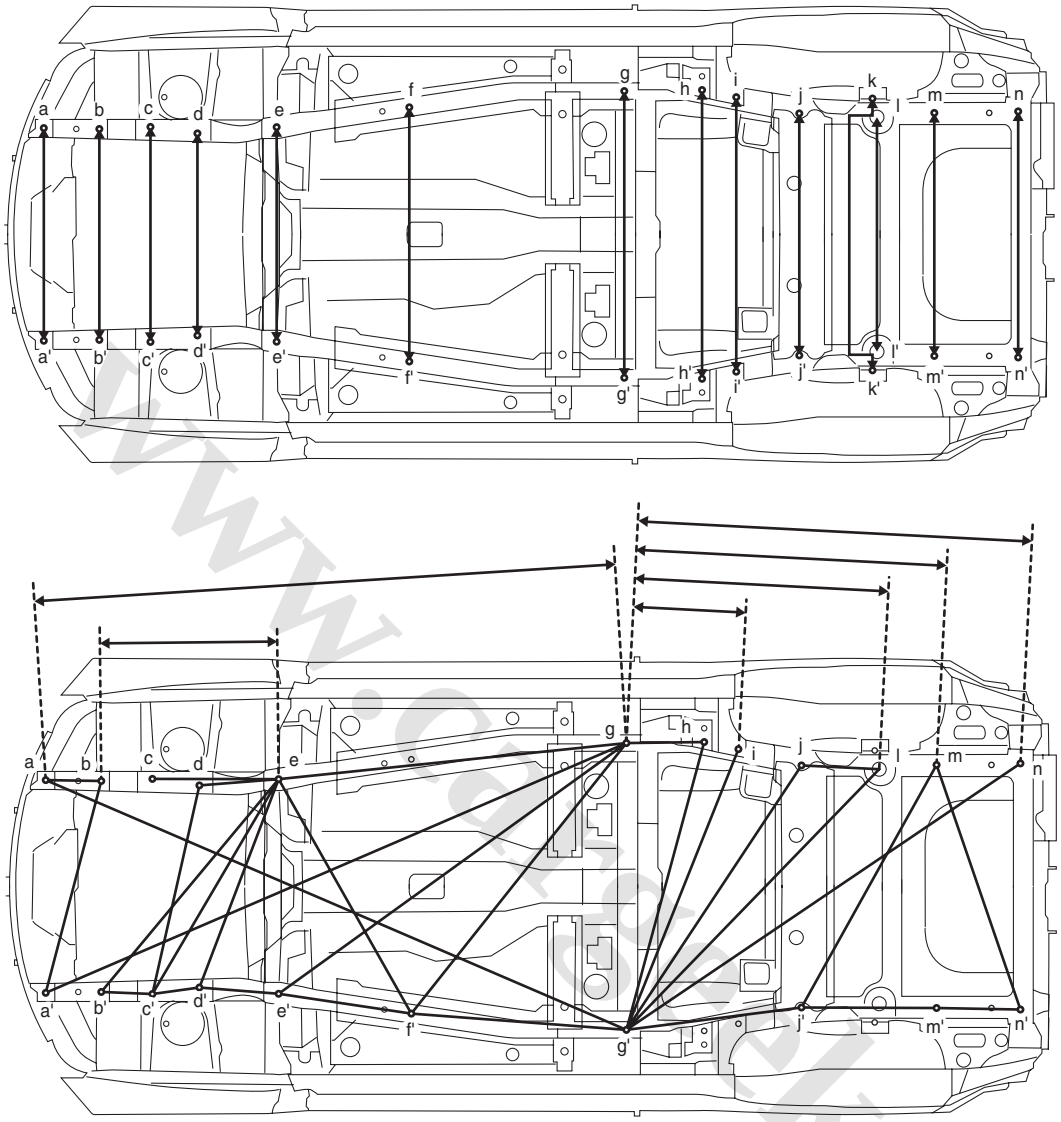


I5JB0A9B0009-01

| | | |
|---|---|---|
| a (a'). Jig hole (ϕ 16 mm) | f (f'). Engine rear mounting member installation hole | k (k'). Rear shock absorber installation hole |
| b (b'). Front suspension frame installation hole | g (g'). Jig hole (ϕ 25 mm) | l (l'). Rear coil spring hole |
| c (c'). Front suspension frame installation hole | h (h'). Trailing rod mount bracket installation front inner side hole | m (m'). Rear suspension frame installation rear side hole |
| d (d'). Front suspension frame installation hole | i (i'). Trailing rod mount bracket installation rear side hole | n (n'). Towing hook installation hole |
| e (e'). Front suspension frame installation hole | j (j'). Rear suspension frame installation front side hole | |

**Hole to hole distance**

| | | |
|---|---|---|
| **a-a': 860 mm (33.86 in.)** | **f-f': 1013 mm (39.88 in.)** | **k-k': 1079 mm (42.48 in.)** |
| **b-b': 830 mm (32.68 in.)** | **g-g': 1144 mm (45.04 in.)** | **l-l': 936 mm (36.85 in.)** |
| **c-c': 840 mm (33.07 in.)** | **h-h': 1134 mm (44.65 in.)** | **m-m': 955 mm (37.60 in.)** |
| **d-d': 794 mm (31.26 in.)** | **i-i': 1116 mm (43.94 in.)** | **n-n': 953 mm (37.52 in.)** |
| **e-e': 860 mm (33.86 in.)** | **j-j': 1000 mm (39.37 in.)** | |

**Hole to hole distance**

| | | |
|---|---|---|
| **a-b: 198 mm (7.80 in.)** | **d-e: 384 mm (15.12 in.)** | **g'-h: 1177 mm (46.34 in.)** |
| **a-g: 2320 mm (91.34 in.)** | **d'-e: 911 mm (35.87 in.)** | **g'-i: 1214 mm (47.80 in.)** |
| **a-g': 2523 mm (99.33 in.)** | **d'-e': 384 mm (15.12 in.)** | **g'-j: 1288 mm (50.71 in.)** |

www.cargeek.ir

| | | |
|---|---|---|
| a’-b: 868 mm (34.17 in.) | e-f’: 1067 mm (42.01 in.) | g’-j’: 718 mm (28.27 in.) |
| a’-g: 2523 mm (99.33 in.) | e-g: 1381 mm (54.37 in.) | g’-l: 1446 mm (56.93 in.) |
| b-e: 750 mm (29.53 in.) | f’-g: 1380 mm (54.33 in.) | g’-n: 1892 mm (74.49 in.) |
| b’-c’: 249 mm (9.80 in.) | f’-g’: 864 mm (34.02 in.) | j-l: 314 mm (12.36 in.) |
| b’-e: 1130 mm (44.49 in.) | g-h: 295 mm (11.61 in.) | j’-m: 1078 mm (42.44 in.) |
| c-e: 532 mm (20.94 in.) | g-i: 445 mm (17.52 in.) | j’-m’: 455 mm (17.91 in.) |
| c’-d: 833 mm (32.80 in.) | g-l: 1010 mm (39.76 in.) | m-n’: 1046 mm (41.18 in.) |
| c’-d’: 163 mm (6.42 in.) | g-m: 1158 mm (45.59 in.) | m’-n’: 429 mm (16.89 in.) |
| c’-e: 1003 mm (39.49 in.) | g-n: 1577 mm (62.09 in.) | |

**3 door model**

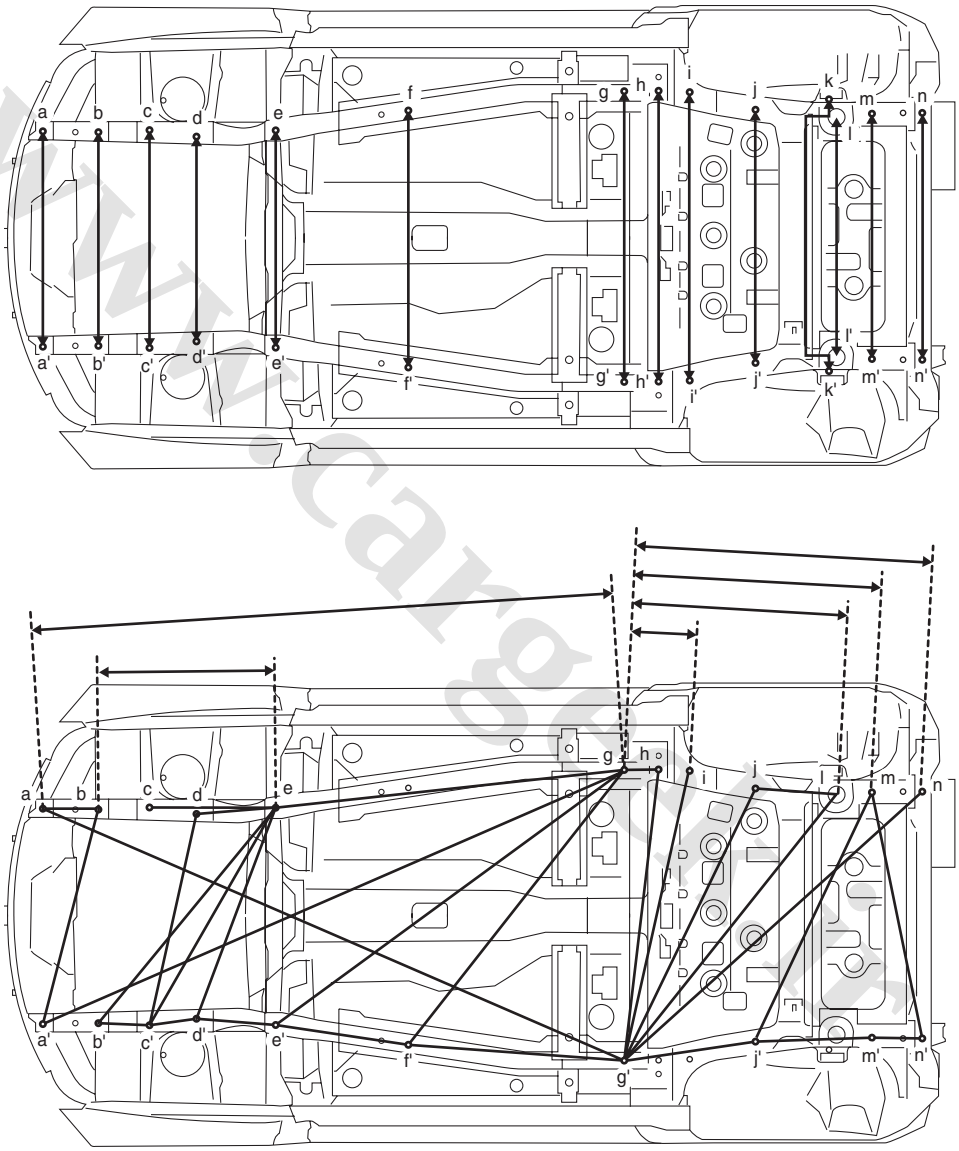


I5JB0A9B0010-01

| | | |
|---|---|---|
| a (a’). Jig hole (ϕ 16 mm) | f (f’). Engine rear mounting member installation hole | k (k’). Rear shock absorber installation hole |
| b (b’). Front suspension frame installation hole | g (g’). Jig hole (ϕ 25 mm) | l (l’). Rear coil spring hole |
| c (c’). Front suspension frame installation hole | h (h’). Trailing rod mount bracket installation front inner side hole | m (m’). Rear suspension frame installation rear side hole |
| d (d’). Front suspension frame installation hole | i (i’). Trailing rod mount bracket installation rear side hole | n (n’). Towing hook installation hole |
| e (e’). Front suspension frame installation hole | j (j’). Rear suspension frame installation front side hole | |

www.CarGeek.ir

**Hole to hole distance**

| | | |
|---|---|---|
| a-a': 860 mm (33.86 in.) | f-f': 1013 mm (39.88 in.) | k-k': 1154 mm (45.43 in.) |
| b-b': 830 mm (32.68 in.) | g-g': 1144 mm (45.04 in.) | l-l': 937 mm (36.89 in.) |
| c-c': 840 mm (33.07 in.) | h-h': 1134 mm (44.65 in.) | m-m': 955 mm (37.60 in.) |
| d-d': 794 mm (31.26 in.) | i-i': 1116 mm (43.94 in.) | n-n': 954 mm (37.56 in.) |
| e-e': 860 mm (33.86 in.) | j-j': 1000 mm (39.37 in.) | |

**Hole to hole distance**

| | | |
|---|---|---|
| a-b: 198 mm (7.80 in.) | d-e: 384 mm (15.12 in.) | g'-h: 1143 mm (45.00 in.) |
| a-g: 2320 mm (91.34 in.) | d'-e: 911 mm (35.87 in.) | g'-i: 1158 mm (45.59 in.) |
| a-g': 2523 mm (99.33 in.) | d'-e': 384 mm (15.12 in.) | g'-j: 1196 mm (47.09 in.) |
| a'-b: 868 mm (34.17 in.) | e-f': 1067 mm (42.01 in.) | g'-j': 534 mm (21.02 in.) |
| a'-g: 2523 mm (99.33 in.) | e-g: 1381 mm (54.37 in.) | g'-l: 1317 mm (51.85 in.) |
| b-e: 750 mm (29.53 in.) | f'-g: 1380 mm (54.33 in.) | g'-n: 1549 mm (60.98 in.) |
| b'-c': 249 mm (9.80 in.) | f'-g': 864 mm (34.02 in.) | j-l: 314 mm (12.36 in.) |
| b'-e: 1130 mm (44.49 in.) | g-h: 96 mm (3.78 in.) | j'-m: 1078 mm (42.44 in.) |
| c-e: 532 mm (20.94 in.) | g-i: 254 mm (10.00 in.) | j'-m': 455 mm (17.91 in.) |
| c'-d: 833 mm (32.80 in.) | g-l: 815 mm (32.09 in.) | m-n': 973 mm (38.31 in.) |
| c'-d': 163 mm (6.42 in.) | g-m: 963 mm (37.91 in.) | m'-n': 190 mm (7.48 in.) |
| c'-e: 1003 mm (39.49 in.) | g-n: 1144 mm (45.04 in.) | |

**5 door model**

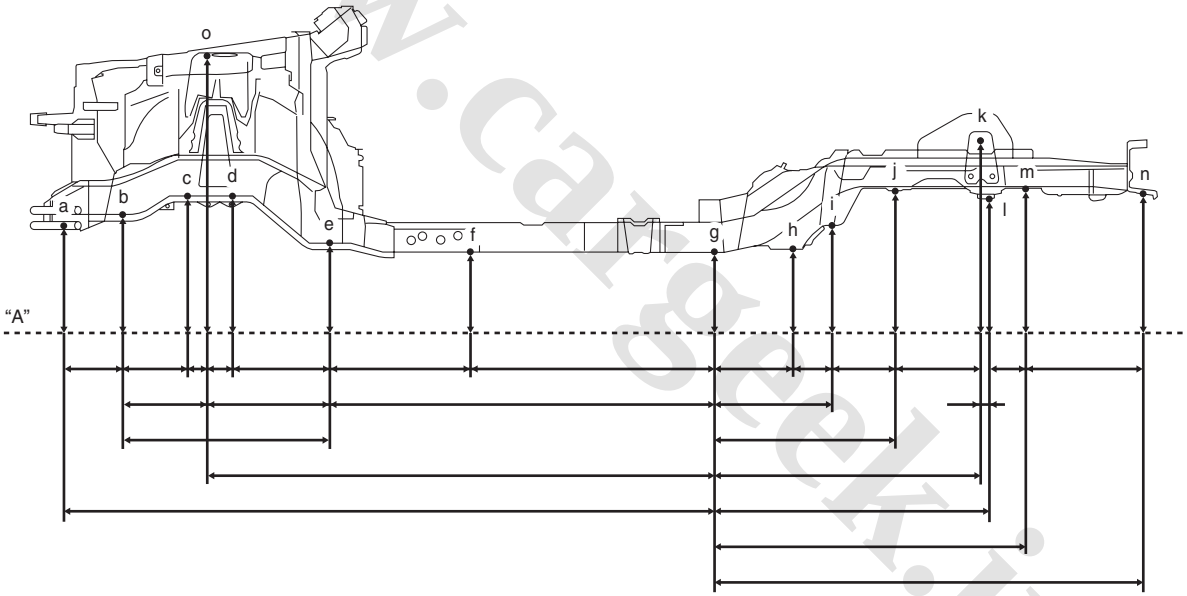


I5JB0A9B0011-01

| | | |
|---|---|---|
| a. Jig hole (ϕ 16 mm) | f. Engine rear mounting member installation hole | k. Rear shock absorber installation hole |
| b. Front suspension frame installation hole | g. Jig hole (ϕ 25 mm) | l. Rear coil spring hole |
| c. Front suspension frame installation hole | h. Trailing rod mount bracket installation front inner side hole | m. Rear suspension frame installation rear side hole |
| d. Front suspension frame installation hole | i. Trailing rod mount bracket installation rear side hole | n. Towing hook installation hole |
| e. Front suspension frame installation hole | j. Rear suspension frame installation front side hole | o. Jig hole (ϕ 10 mm) |

**Hole to hole distance**

| | | |
|---|---|---|
| a-b: 196 mm (7.72 in.) | d-e: 344 mm (13.54 in.) | g-m: 1131 mm (44.53 in.) |
| a-g: 2313 mm (91.06 in.) | e-f: 512 mm (20.16 in.) | g-n: 1560 mm (61.42 in.) |
| b-c: 239 mm (9.41 in.) | e-g: 1373 mm (54.06 in.) | h-i: 139 mm (5.47 in.) |
| b-o: 289 mm (11.38 in.) | f-g: 862 mm (33.94 in.) | i-j: 243 mm (9.57 in.) |
| b-e: 744 mm (29.29 in.) | g-h: 295 mm (11.61 in.) | j-k: 294 mm (11.57 in.) |
| c-o: 50 mm (1.97 in.) | g-i: 434 mm (17.09 in.) | k-l: 15 mm (0.59 in.) |
| o-d: 111 mm (4.37 in.) | g-j: 677 mm (26.65 in.) | l-m: 145 mm (5.71 in.) |
| o-e: 455 mm (17.91 in.) | g'-k: 971 mm (38.23 in.) | m-n: 429 mm (16.89 in.) |
| o-g: 1828 mm (71.97 in.) | g-l: 987 mm (38.86 in.) | |

www.cargeek.ir

www.CarGeek.ir


## Projection dimension from standard line “A”

| | | |
|---|---|---|
| a: 166 mm (6.54 in.) | f: 66 mm (2.60 in.) | k: 436 mm (17.17 in.) |
| b: 193 mm (7.60 in.) | g: 64 mm (2.52 in.) | l: 252 mm (9.92 in.) |
| c: 263 mm (10.35 in.) | h: 72 mm (2.83 in.) | m: 293 mm (11.54 in.) |
| d: 263 mm (10.35 in.) | i: 159 mm (6.26 in.) | n: 275 mm (10.83 in.) |
| e: 95 mm (3.74 in.) | j: 293 mm (11.54 in.) | o: 774 mm (30.47 in.) |

### 3 door model

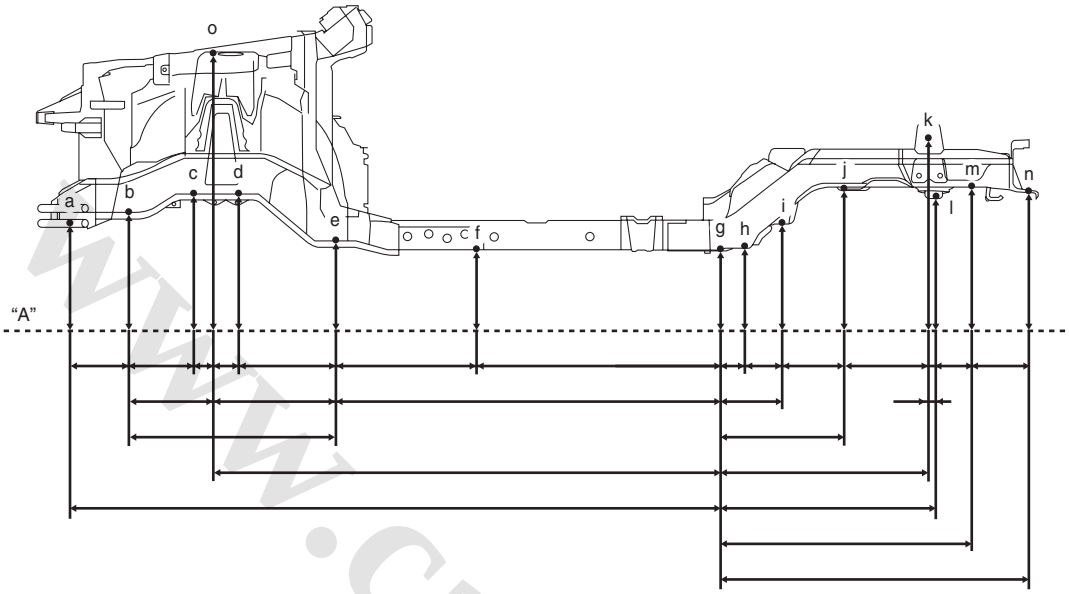


I5JB0A9B0012-01

| | | |
|---|---|---|
| a. Jig hole (ϕ 16 mm) | f. Engine rear mounting member installation hole | k. Rear shock absorber installation hole |
| b. Front suspension frame installation hole | g. Jig hole (ϕ 25 mm) | l. Rear coil spring hole |
| c. Front suspension frame installation hole | h. Trailing rod mount bracket installation front inner side hole | m. Rear suspension frame installation rear side hole |
| d. Front suspension frame installation hole | i. Trailing rod mount bracket installation rear side hole | n. Towing hook installation hole |
| e. Front suspension frame installation hole | j. Rear suspension frame installation front side hole | o. Jig hole (ϕ 10 mm) |

## Hole to hole distance

| | | |
|---|---|---|
| a-b: 196 mm (7.72 in.) | d-e: 344 mm (13.54 in.) | g-m: 931 mm (36.65 in.) |
| a-g: 2313 mm (91.06 in.) | e-f: 511 mm (20.12 in.) | g-n: 1120 mm (44.09 in.) |
| b-c: 239 mm (9.41 in.) | e-g: 1373 mm (54.06 in.) | h-i: 139 mm (5.47 in.) |
| b-o: 289 mm (11.38 in.) | f-g: 862 mm (33.94 in.) | i-j: 243 mm (9.57 in.) |
| b-e: 744 mm (29.29 in.) | g-h: 95 mm (3.74 in.) | j-k: 294 mm (11.57 in.) |
| c-o: 50 mm (1.97 in.) | g-i: 234 mm (9.21 in.) | k-l: 15 mm (0.59 in.) |
| o-d: 111 mm (4.37 in.) | g-j: 477 mm (18.78 in.) | l-m: 145 mm (5.71 in.) |
| o-e: 455 mm (17.91 in.) | g’-k: 771 mm (30.35 in.) | m-n: 189 mm (7.44 in.) |
| o-g: 1828 mm (71.97 in.) | g-l: 786 mm (30.94 in.) | |

## Projection dimension from standard line “A”

| | | |
|---|---|---|
| a: 166 mm (6.54 in.) | f: 65 mm (2.56 in.) | k: 440 mm (17.32 in.) |
| b: 193 mm (7.60 in.) | g: 63 mm (2.48 in.) | l: 250 mm (9.84 in.) |
| c: 263 mm (10.35 in.) | h: 73 mm (2.87 in.) | m: 293 mm (11.54 in.) |
| d: 263 mm (10.35 in.) | i: 160 mm (6.30 in.) | n: 275 mm (10.83 in.) |
| e: 95 mm (3.74 in.) | j: 293 mm (11.54 in.) | o: 772 mm (30.39 in.) |

www.cargeek.ir

www.CarGeek.ir

## Front Suspension Frame

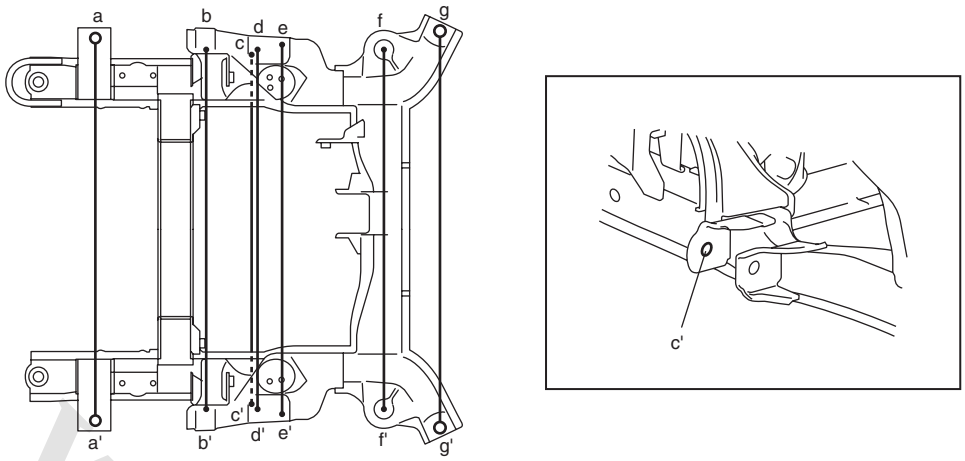


I5JB0A9B0013-01

| | | |
|---|---|---|
| a (a'). Front suspension frame installation front side bolt hole | d (d'). Front suspension frame stud | g (g'). Front suspension frame installation rear side bolt hole |
| b (b'). Front suspension frame installation bolt hole | e (e'). Front suspension frame installation bolt hole | |
| c (c'). Front suspension arm installation front side hole | f (f'). Front suspension arm installation rear side hole | |

### Hole to hole distance

| | | |
|---|---|---|
| **a-a': 830 mm (32.68 in.)** | **d-d': 790 mm (31.10 in.)** | **g-g': 860 mm (33.86 in.)** |
| **b-b': 840 mm (33.07 in.)** | **e-e': 794 mm (31.26 in.)** | |
| **c-c': 780 mm (30.71 in.)** | **f-f': 780 mm (30.71 in.)** | |

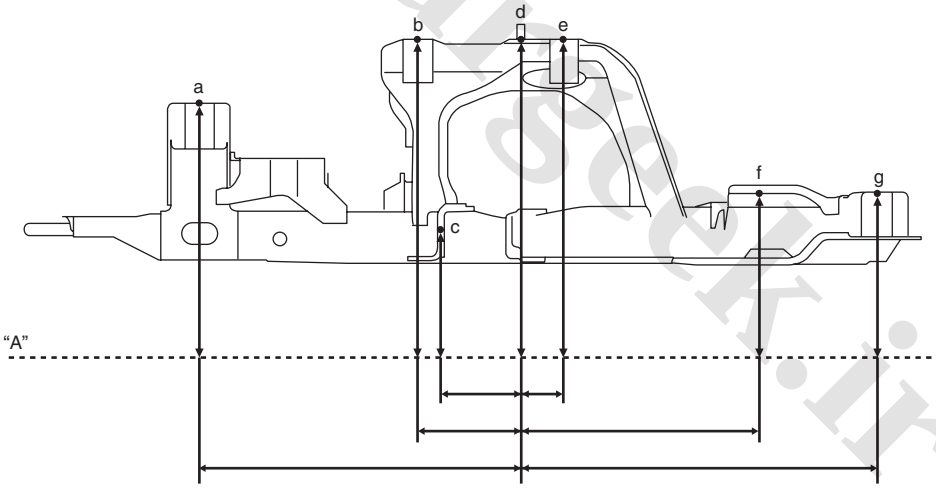


I5JB0A9B0014-01

| | | |
|---|---|---|
| a. Front suspension frame installation front side bolt hole | d. Front suspension frame stud | g. Front suspension frame installation rear side bolt hole |
| b. Front suspension frame installation bolt hole | e. Front suspension frame installation bolt hole | |
| c. Front suspension arm installation front side hole | f. Front suspension arm installation rear side hole | |

### Hole to hole distance

| | |
|---|---|
| **a-d: 349 mm (13.74 in.)** | **d-e: 51 mm (2.01 in.)** |
| **b-d: 110 mm (4.33 in.)** | **d-f: 275 mm (10.83 in.)** |
| **c-d: 80 mm (3.15 in.)** | **d-g: 395 mm (15.55 in.)** |

### Projection dimension from standard line "A"

| | | |
|---|---|---|
| **a: 193 mm (7.60 in.)** | **d: 263 mm (10.35 in.)** | **g: 95 mm (3.74 in.)** |
| **b: 263 mm (10.35 in.)** | **e: 263 mm (10.35 in.)** | |
| **c: 49 mm (1.93 in.)** | **f: 96 mm (3.78 in.)** | |

www.cargeek.ir

www.CarGeek.ir


## Panel Clearance

S5JB0A9B07002

[A]

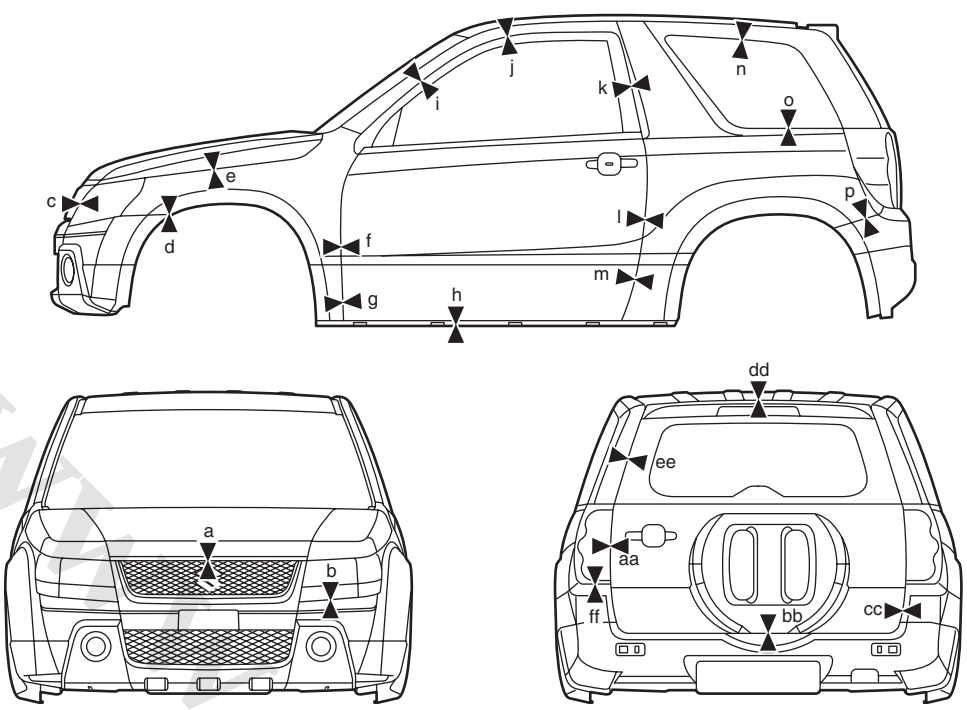


[B]

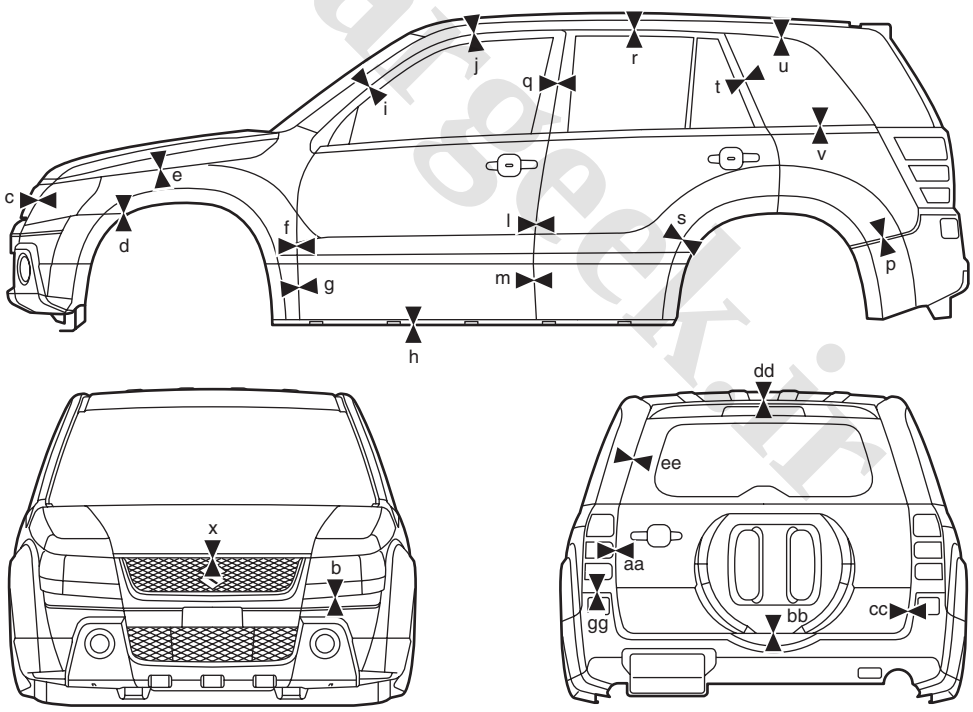


I5JB0A9B0015-01

www.cargeek.ir

www.CarGeek.ir

**Panel to panel distance**

| | | |
|---|---|---|
| [A]: 3 door model | j: 4.0 – 6.0 mm (0.158 – 0.236 in.) | u: 1.8 – 3.8 mm (0.071 – 0.149 in.) |
| [B]: 5 door model | k: 4.4 – 6.4 mm (0.213 – 0.251 in.) | v: 3.3 – 5.3 mm (0.130 – 0.208 in.) |
| a: 4.9 – 6.9 mm (0.193 – 0.271 in.) | l: 3.0 – 5.0 mm (0.119 – 0.196 in.) | w: 3.0 – 5.0 mm (0.119 – 0.196 in.) |
| b: 1.0 – 3.0 mm (0.040 – 0.118 in.) | m: 4.0 – 6.0 mm (0.158 – 0.236 in.) | x: 5.9 – 7.9 mm (0.233 – 0.311 in.) |
| c: 1.9 – 2.9 mm (0.075 – 0.114 in.) | n: 2.5 – 4.5 mm (0.099 – 0.177 in.) | aa: 4.0 – 6.0 mm (0.158 – 0.236 in.) |
| d: 0.5 – 1.0 mm (0.020 – 0.039 in.) | o: 2.0 – 4.0 mm (0.079 – 0.157 in.) | bb: 6.3 – 8.3 mm (0.249 – 0.327 in.) |
| e: 5.8 – 7.8 mm (0.229 – 0.307 in.) | p: 0.5 – 1.0 mm (0.020 – 0.039 in.) | cc: 5.0 – 7.0 mm (0.197 – 0.275 in.) |
| f: 3.0 – 5.0 mm (0.119 – 0.196 in.) | q: 3.0 – 5.0 mm (0.119 – 0.196 in.) | dd: 6.2 – 8.2 mm (0.245 – 0.322 in.) |
| g: 4.0 – 6.0 mm (0.158 – 0.236 in.) | r: 4.0 – 6.0 mm (0.158 – 0.236 in.) | ee: 4.0 – 6.0 mm (0.158 – 0.236 in.) |
| h: 15.7 – 17.7 mm (0.619 – 0.696 in.) | s: 17.5 – 19.5 mm (0.689 – 0.767 in.) | ff: 1.1 – 3.1 mm (0.044 – 0.122 in.) |
| i: 4.0 – 6.0 mm (0.158 – 0.236 in.) | t: 6.0 – 8.0 mm (0.237 – 0.314 in.) | gg: 1.0 – 3.0 mm (0.040 – 0.118 in.) |

www.cargeek.ir

www.cargeek.ir

www.CarGeek.ir


# Paint / Coatings

## General Description

### Anti-Corrosion Treatment Construction

S5JB0A9C01001

**⚠ WARNING**

**Standard shop practices, particularly eye protection, should be followed during the performance of the following operations to avoid personal injury.**

As rust proof treatment, steel sheets are given corrosion resistance on the interior and/or exterior.
These corrosion resistance steel sheet materials are called one of two-side galvanized steel sheets.
It is for the sake of rust protection that these materials are selected and given a variety of treatments as described blow.

- Steel sheets are treated with cathodic electro primer which is excellent in corrosion resistance.
- Rust proof wax coatings are applied to door and side sill insides where moisture is liable to stay.
- Vinyl coating is applied to body underside and wheel housing inside.
- Sealer is applied to door hem, engine compartment steel sheet-to-steel sheet joint, and the like portions to prevent water penetration and resulting in rust occurrence.

In panel replacement or collision damage repair, leaving the relevant area untreated as it is in any operation which does disturb the rust proof treatment will cause corrosion to that area. Therefore, it is the essential function of any repair operation to correctly recoat the related surfaces of the relevant area.
All the metal panels are coated with metal conditioners and primer coating during vehicle production. Following the repair and/or replacement parts installation, every accessible bare metal surface should be cleaned and coated with rust proof primer. Perform this operation prior to the application of sealer and rust proof wax coating.

Sealer is applied to the specific joints of a vehicle during production. The sealer is intended to prevent dust from entering the vehicle and serves also as an anticorrosion barrier. The sealer is applied to the door and hood hem areas and between panels. Correct and reseal the originally sealed joints if damaged. Reseal the attaching joints of a new replacement panel and reseal the hem area of a replacement door or hood.
Use a quality sealer to seal the flanged joints, overlap joints and seams. The sealer must have flexible characteristics and paint ability after it's applied to repair areas.
For the sealer to fill open joints, use caulking material. Select a sealer in conformance with the place and purpose of a specific use. Observe the manufacturer's label-stand instructions when using the sealer.
In many cases, repaired places require color painting. When this is required, follow the ordinary techniques specified for the finish preparation, color painting and undercoating build-up.
Rust proof wax, a penetrative compound, is applied to the metal-to-metal surfaces (door and side sill insides) where it is difficult to use ordinary undercoating material for coating. Therefore, when selecting the rust proof wax, it may be the penetrative type.
During the undercoating (vinyl coating) application, care should be taken that sealer is not applied to the engine-related parts and shock absorber mounting or rotating parts. Following the under coating, make sure that body drain holes are kept open.
The sequence of the application steps of the anti-corrosion materials are as follows:

1) Clean and prepare the metal surface.
2) Apply primer.
3) Apply sealer (all joints sealed originally).
4) Apply color in areas where color is required such as hem flanges, exposed joints and under body components.
5) Apply anticorrosion compound (penetrative wax).
6) Apply undercoating (rust proof material).

www.cargeek.ir

www.CarGeek.ir

## Plastic Parts Finishing

S5JB0A9C01002

Paintable plastic parts are ABS plastic parts.

### Painting

Rigid or hand ABS plastic needs no primer coating. General acrylic lacquers can be painted properly over hard ABS plastic in terms of adherence.

1) Use cleaning solvent for paint finish to wash each part.
2) Apply conventional acrylic color lacquer to part surface.
3) Follow lacquer directions for required drying time. (Proper drying temperature range is 60 – 70 °C (140 – 158 °F)).

### Reference

Plastic parts employ not only ABS (Acrylonitrile Butadiene Styrene) plastic but also polypropylene, vinyl, or the like plastic. Burning test method to identify ABS plastic is described below.

1) Use a sharp blade to cut off a plastic sliver from the part at its hidden backside.
2) Hold sliver with pincers and set it on fire.
3) Carefully observe condition of the burning plastic.
4) ABS plastic must raise readily distinguishable back smoke while burning with its residue suspended in air temporarily.
5) Polypropylene must raise no readily distinguishable smoke while burning.

# Component Location

## Sealant Application Areas

S5JB0A9C03001

### Front Structure Panel

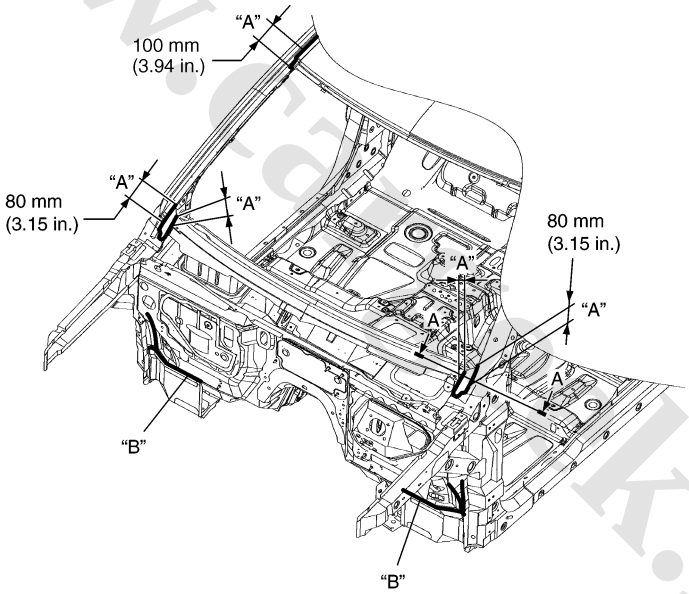


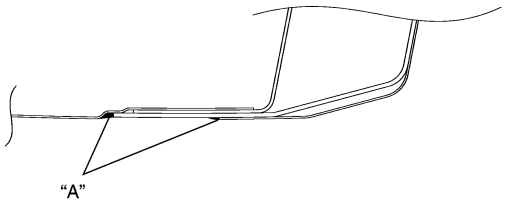


A – A

I5JB0A9C0001-03

| | |
|---|---|
| "A": Flatten sealant. | "B": Smooth out sealant with a brush. |

www.cargeek.ir

## Dash Panel and Front Floor Panel (5 Door Model)

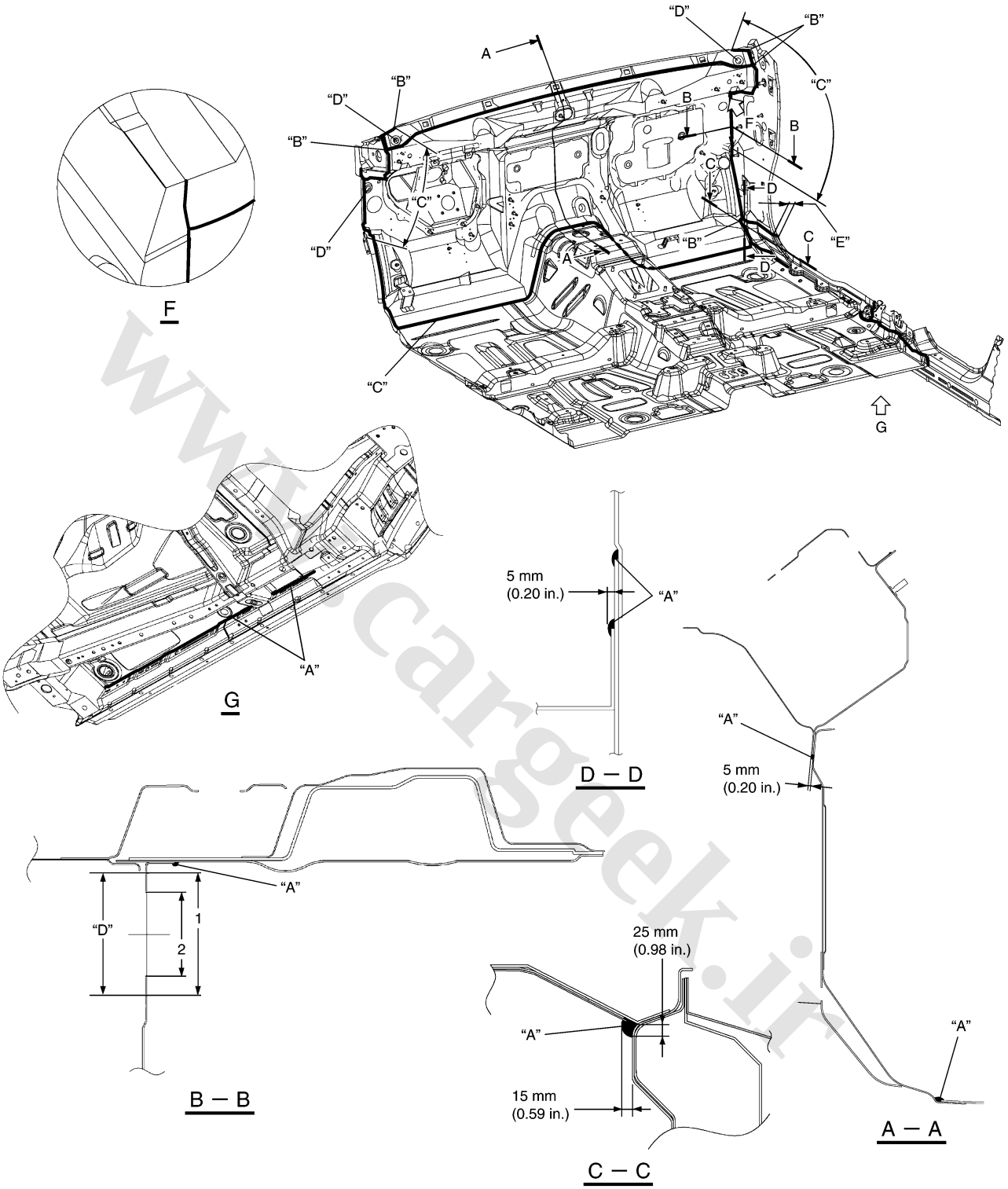


I5JB0A9C0002-01

| | |
|---|---|
| "A": Apply sealant. | "E": Flatten sealant. |
| "B": Fill gap / hole with sealant. | 1. 88 mm (3.46 in.) diameter |
| "C": Smooth out sealant with a brush. | 2. 60 mm (2.36 in.) diameter hole |
| "D": Do not apply sealant. | |

www.cargeek.ir

www.CarGeek.ir

## Dash Panel and Front Floor Panel (3 Door Model)

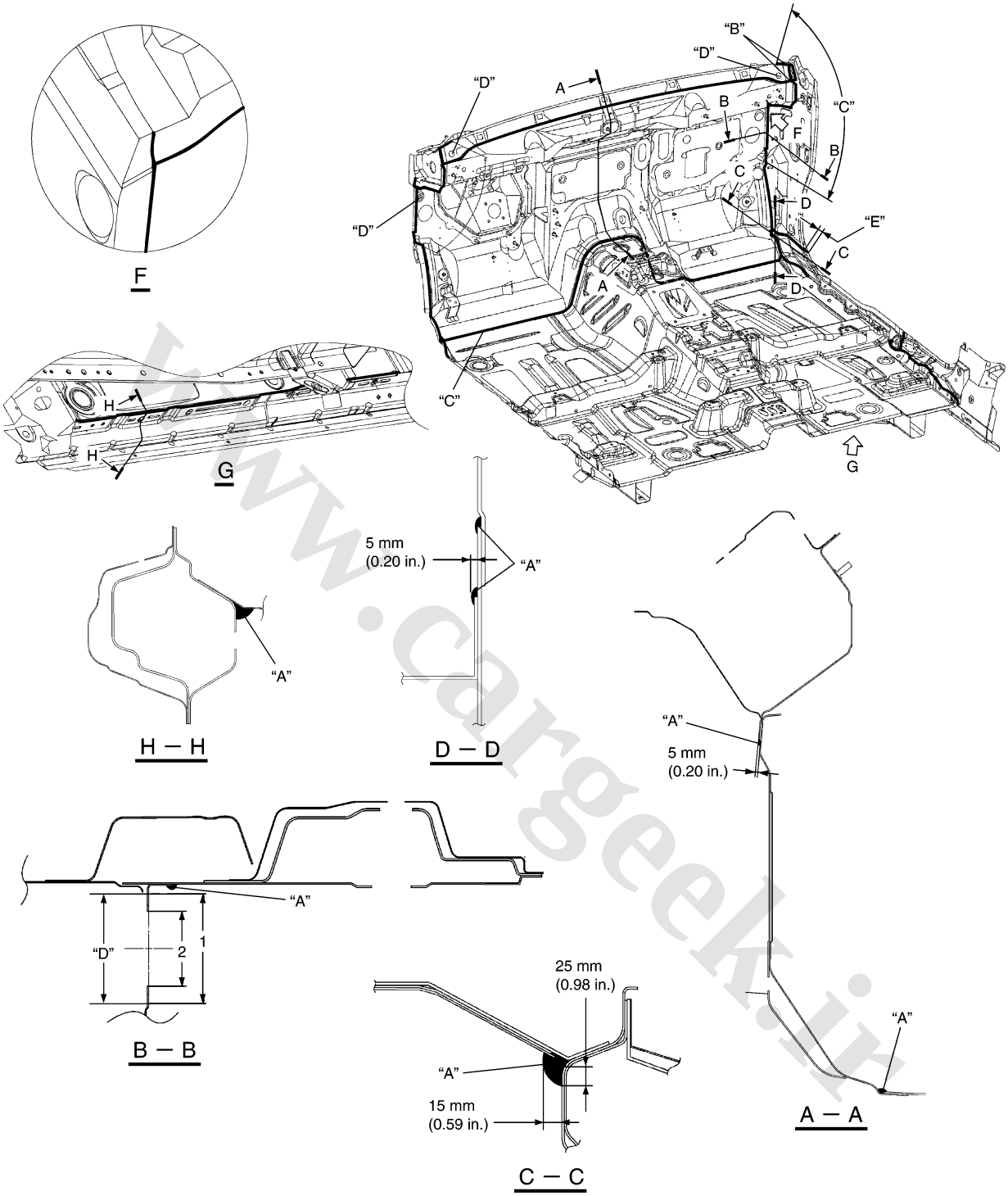


I5JB0A9C0003-01

| | |
|---|---|
| "A": Apply sealant. | "E": Flatten sealant. |
| "B": Fill gap / hole with sealant. | 1. 88 mm (3.46 in.) diameter |
| "C": Smooth out sealant with a brush. | 2. 60 mm (2.36 in.) diameter hole |
| "D": Do not apply sealant. | |

www.cargeek.ir

## Front and Rear Door Panels (5 Door Model)

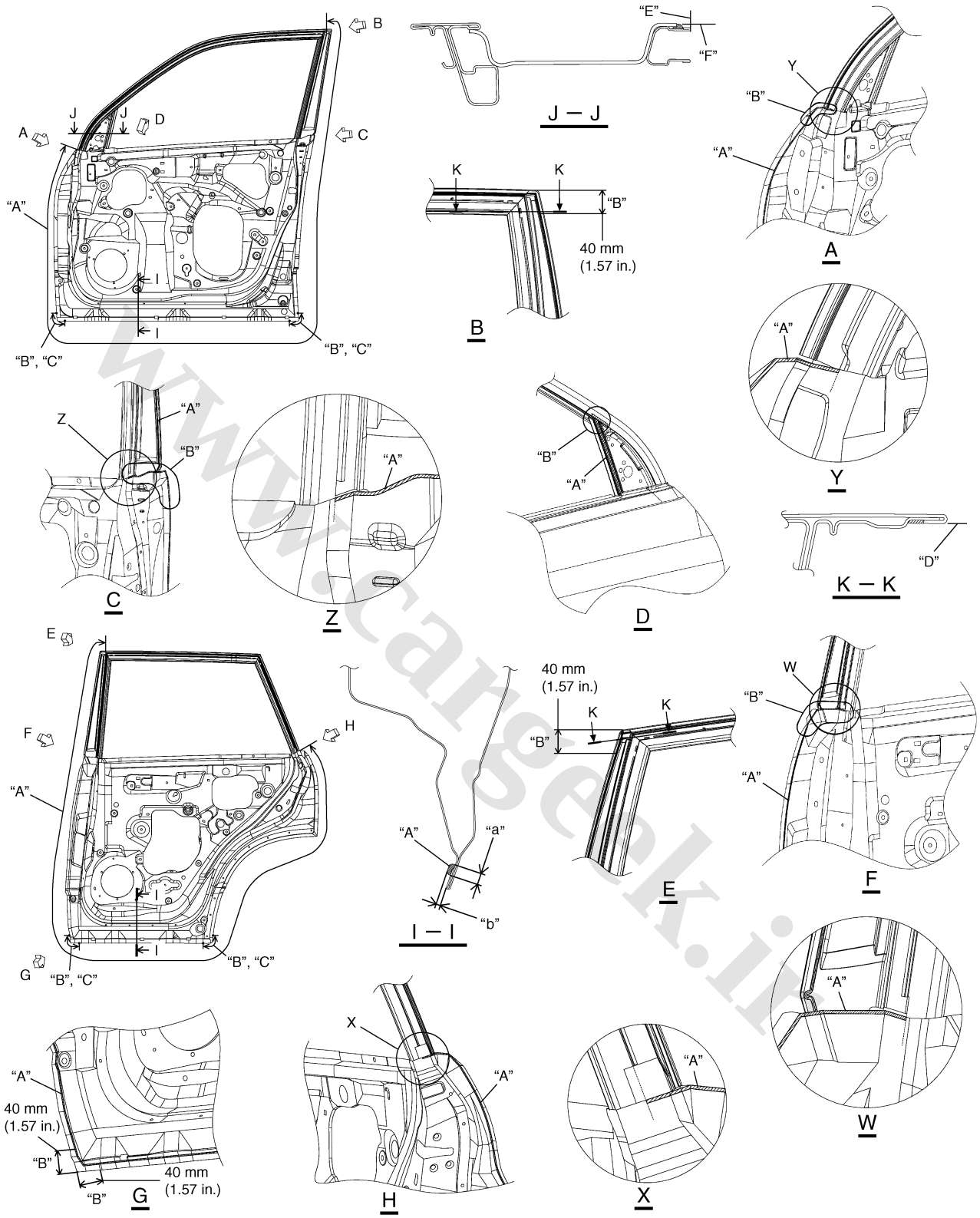


I5JB0A9C0004-02

| | | |
|---|---|---|
| "A": Apply sealant. | "D": Wipe off sealant so as not to protrude from this surface. | "a": Min. 6 mm (0.24 in.) |
| "B": Wipe off excess sealant after application. | "E": Do not protrude sealant backward from this line. | "b": Max. 3 mm (0.12 in.) |
| "C": Do not fill up drain hole. | "F": Do not protrude sealant outside from this line. | |

www.cargeek.ir

www.CarGeek.ir

## Front Door Panel (3 Door Model)

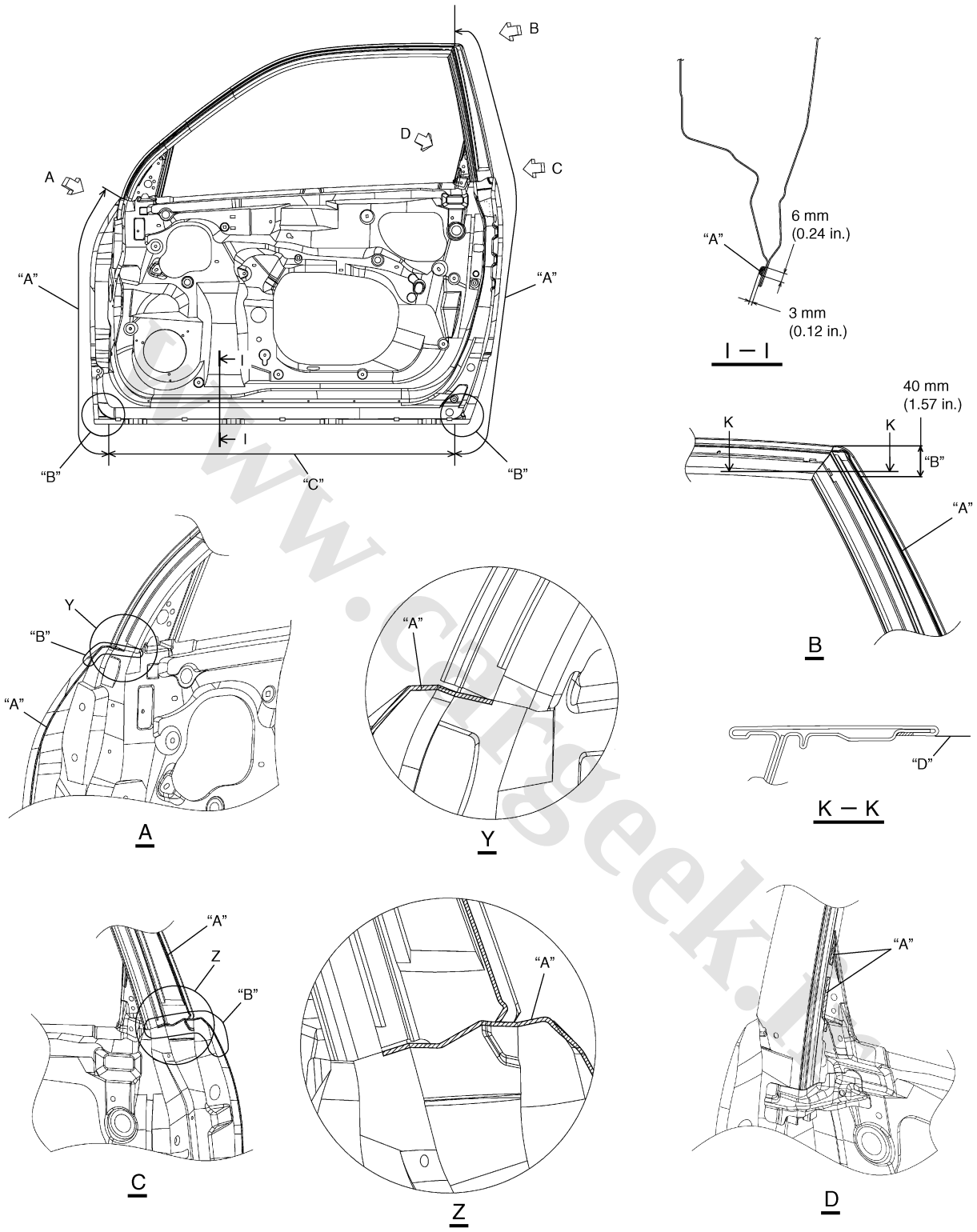


I5JB0A9C0005-01

| | |
|---|---|
| "A": Apply sealant. | "C": Apply wide sealant. |
| "B": Wipe off excess sealant after application. | "D": Wipe off sealant so as not to protrude from this surface. |

www.cargeek.ir

## Rear End Door Panel and Hood Panel

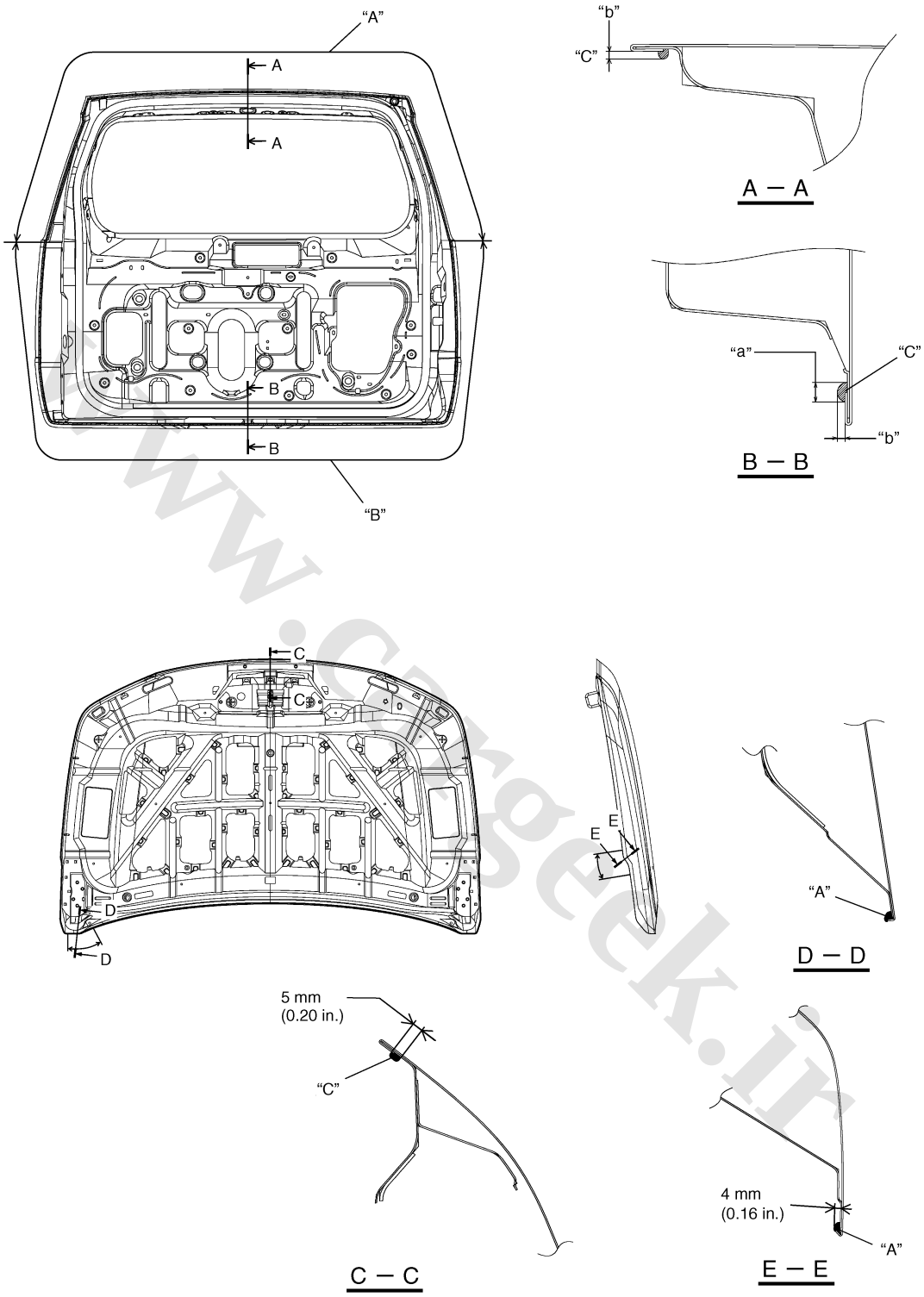


I5JB0A9C0006-02

| | |
|---|---|
| "A": Apply sealant. | "a": Min. 6 mm (0.24 in.) |
| "B": Apply wide sealant. | "b": Max. 3 mm (0.12 in.) |
| "C": Apply sealant covering flange end. | |

www.cargeek.ir

www.CarGeek.ir

## Rear Structure Panel (5 Door Model)

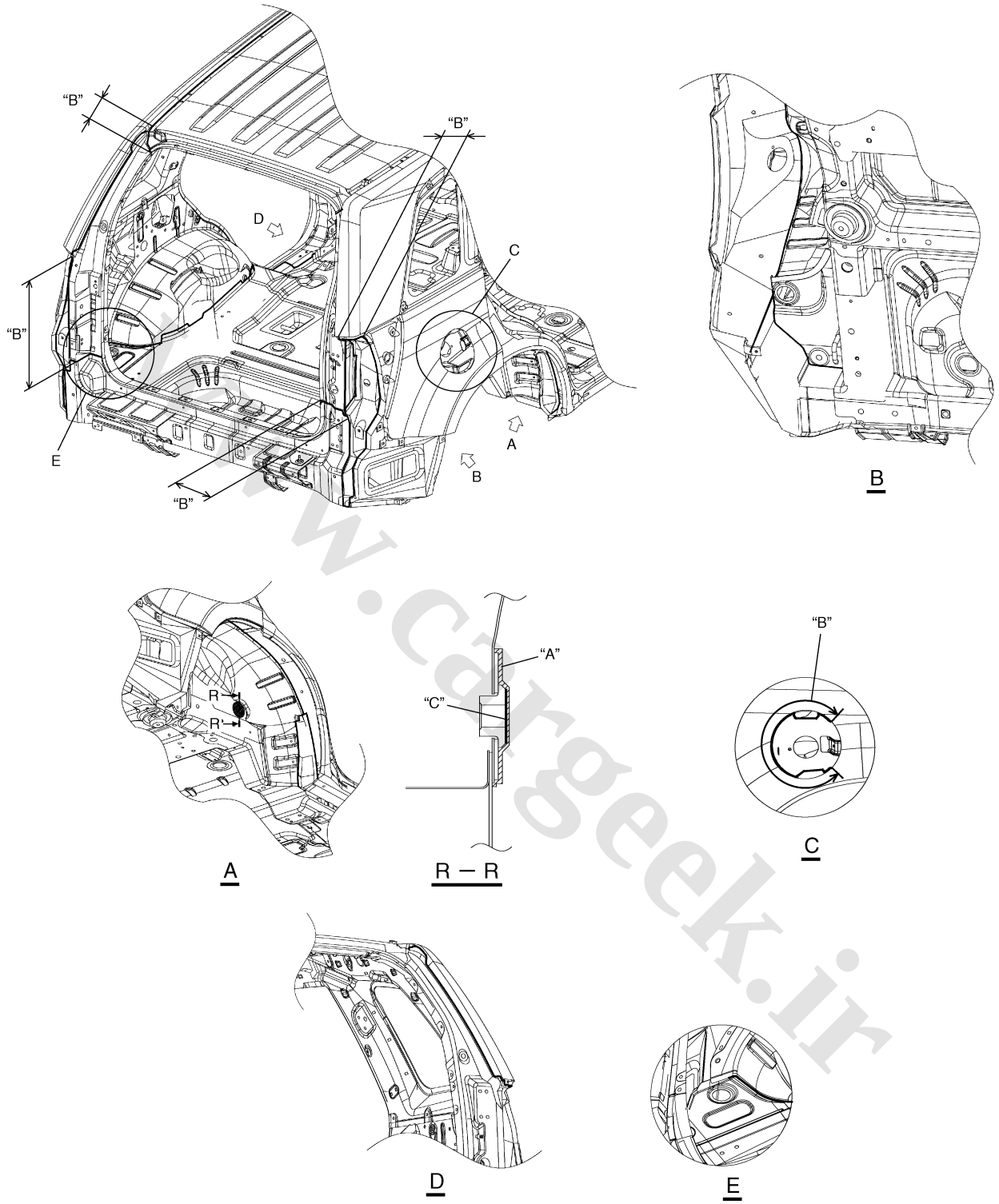


I5JB0A9C0007-02

| | |
|---|---|
| "A": Apply sealant. | "C": Do not apply sealant. |
| "B": Smooth out sealant with a brush. | |

www.cargeek.ir

www.CarGeek.ir


## Rear Structure Panel (3 Door Model)

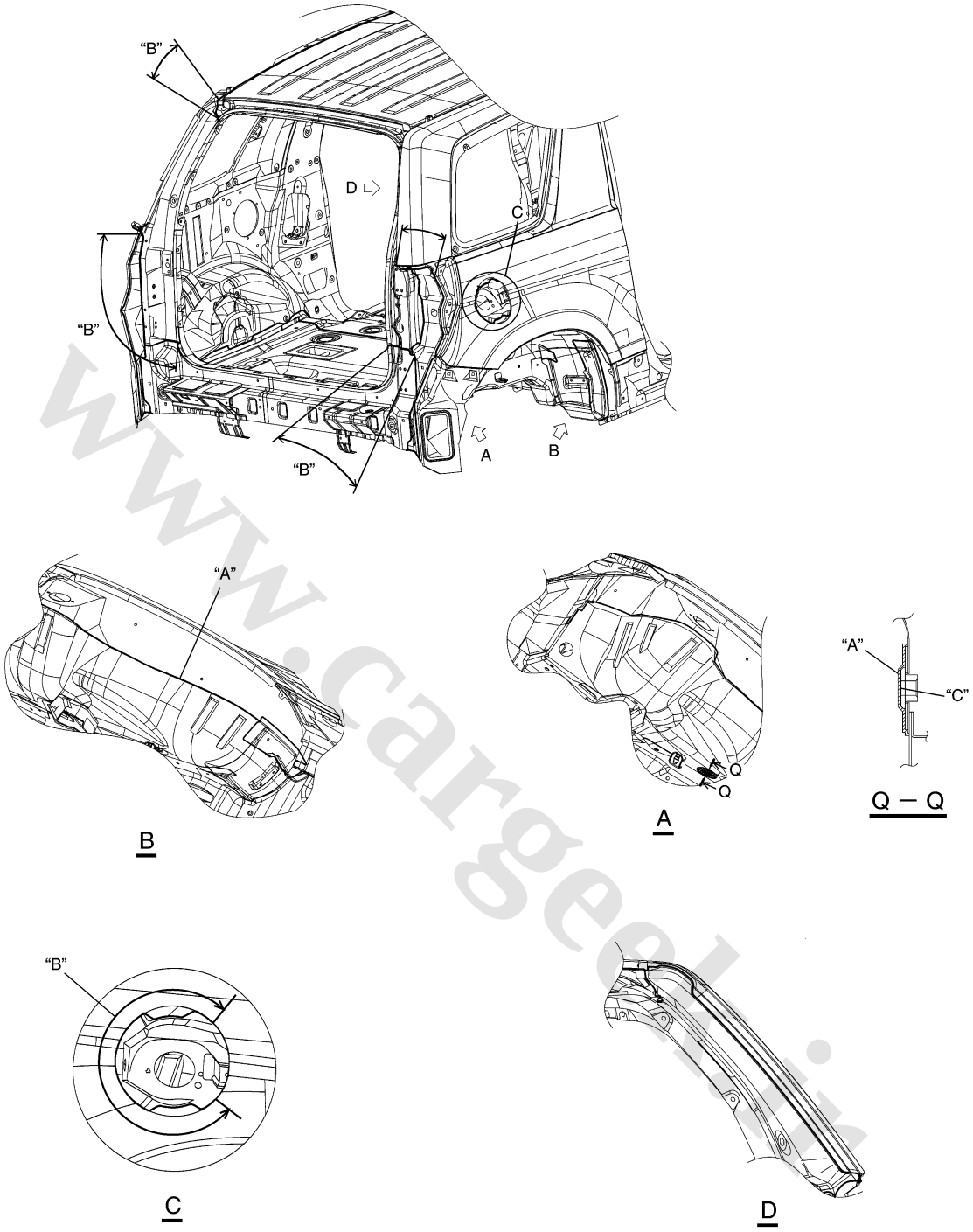


I5JB0A9C0008-02

| | |
|---|---|
| "A": Apply sealant. | "C": Do not apply sealant. |
| "B": Smooth off sealant with a brush. | |

www.cargeek.ir

www.CarGeek.ir

## Floor Panel (5 Door Model)

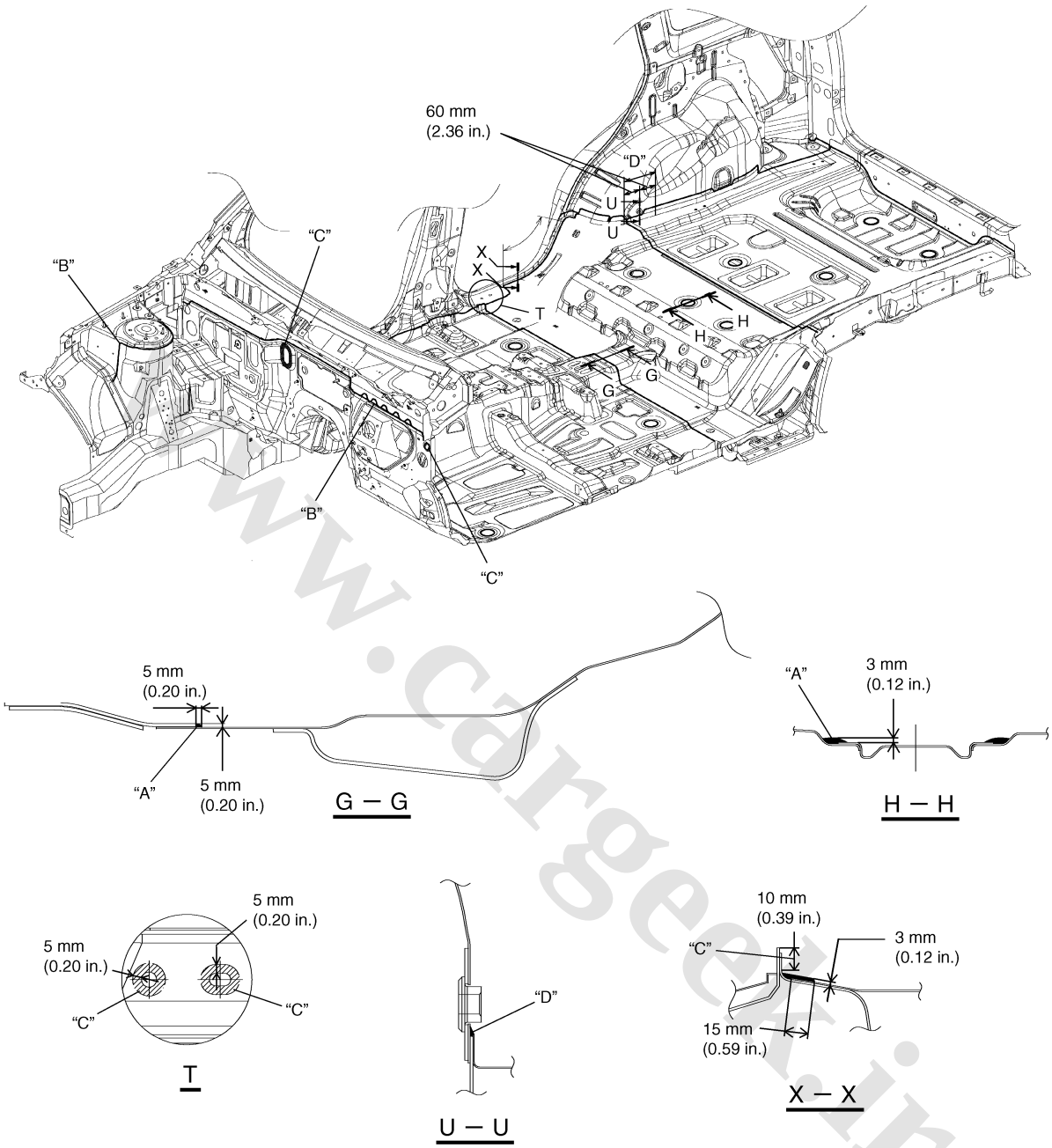


I5JB0A9C0009-01

| | |
|---|---|
| "A": Apply sealant. | "C": Do not apply sealant. |
| "B": Smooth off sealant with a brush. | "D": Flatten sealant. |

www.cargeek.ir

www.CarGeek.ir


## Floor Panel (3 Door Model)

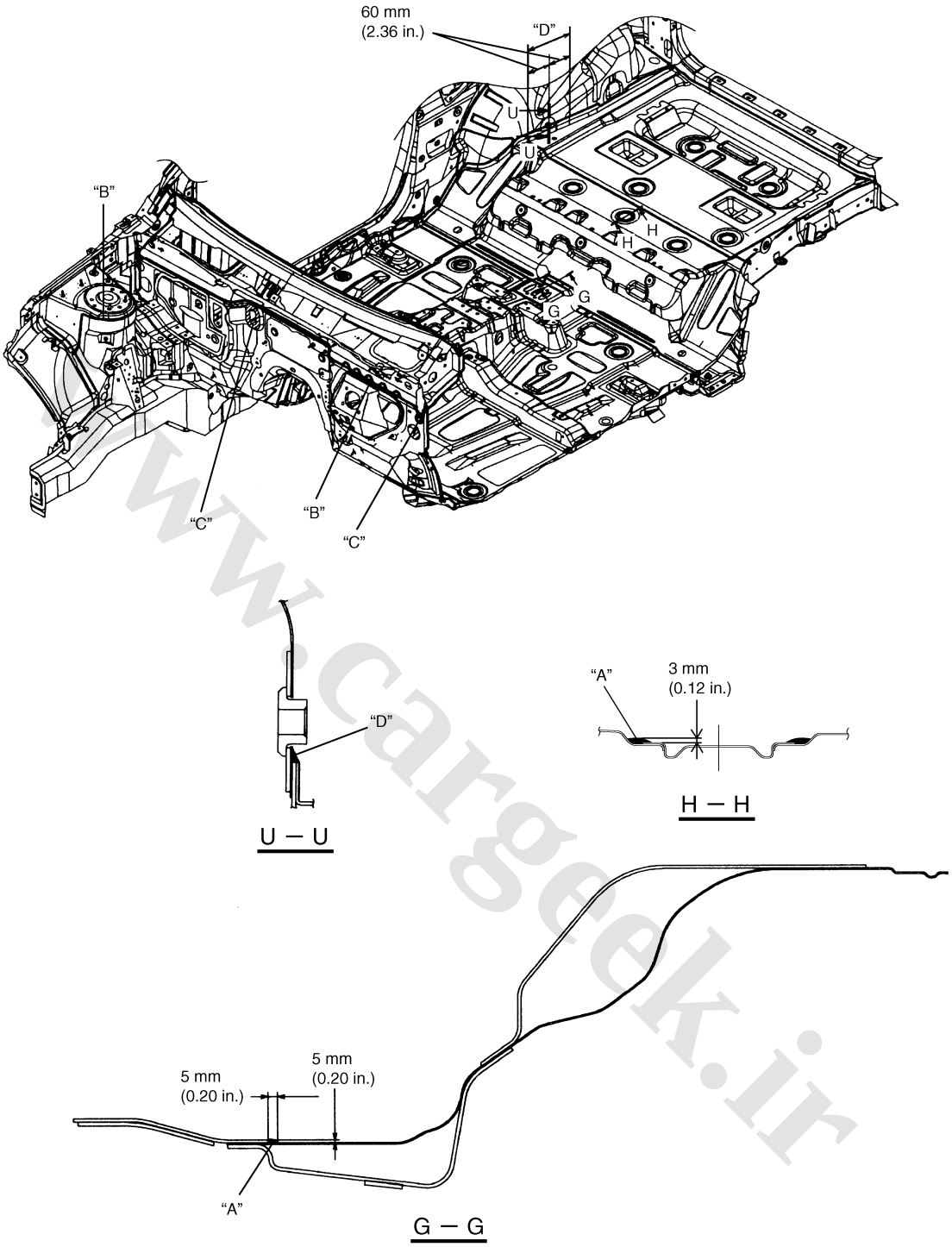


I5JB0A9C0010-01

| | |
|---|---|
| "A": Apply sealant. | "C": Do not apply sealant. |
| "B": Smooth off sealant with a brush. | "D": Flatten sealant. |

www.cargeek.ir

www.CarGeek.ir

## Under Coating Application Areas

S5JB0A9C03002

### 5 Door Model

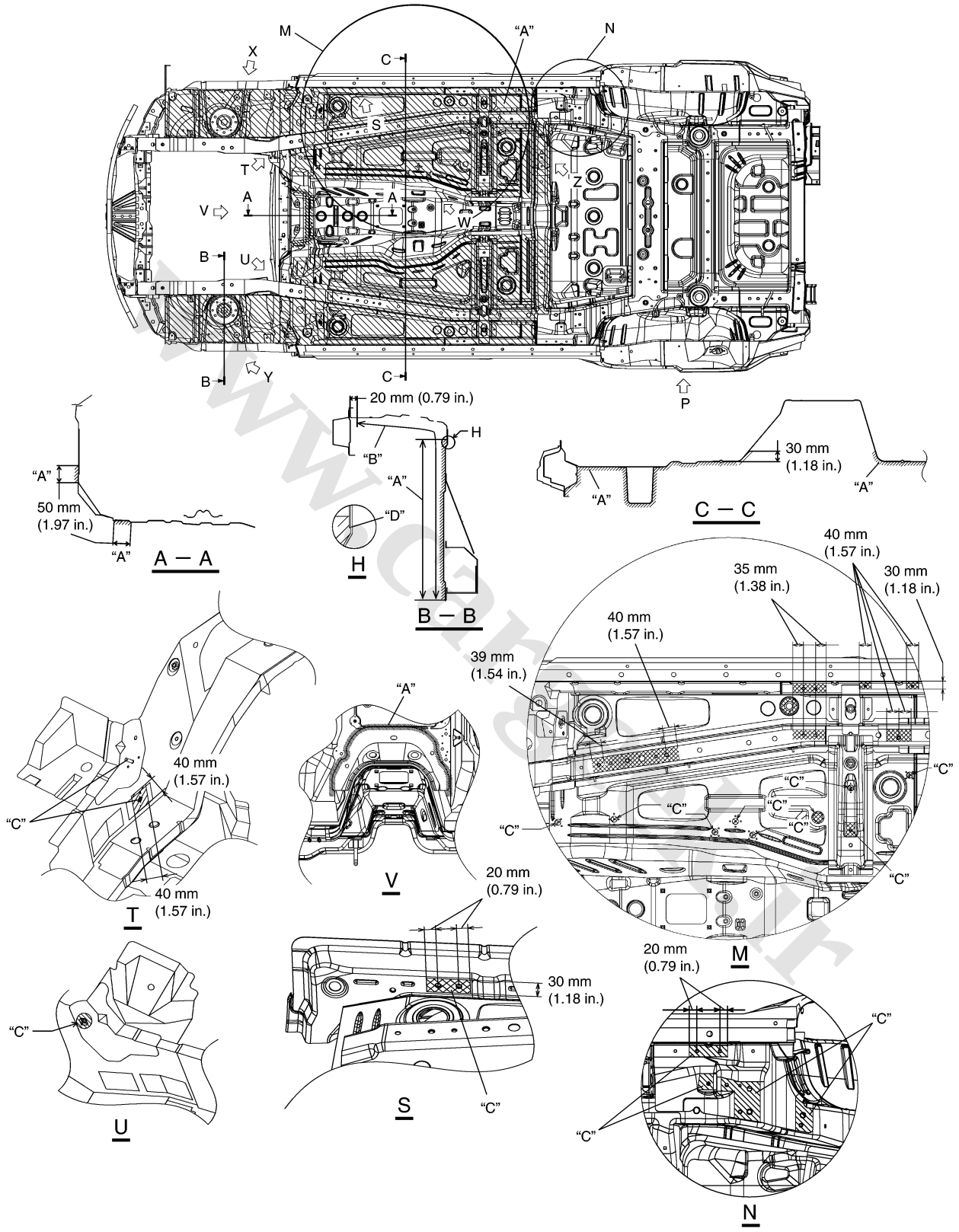


I5JB0A9C0011-01

| | |
|---|---|
| "A": Apply undercoating (PVC, 400 μm or more). | "C": Do not apply undercoating. |
| "B": Apply black painting. | "D": Apply undercoating (PVC, 400 μm or more) covering flange end. |

www.cargeek.ir

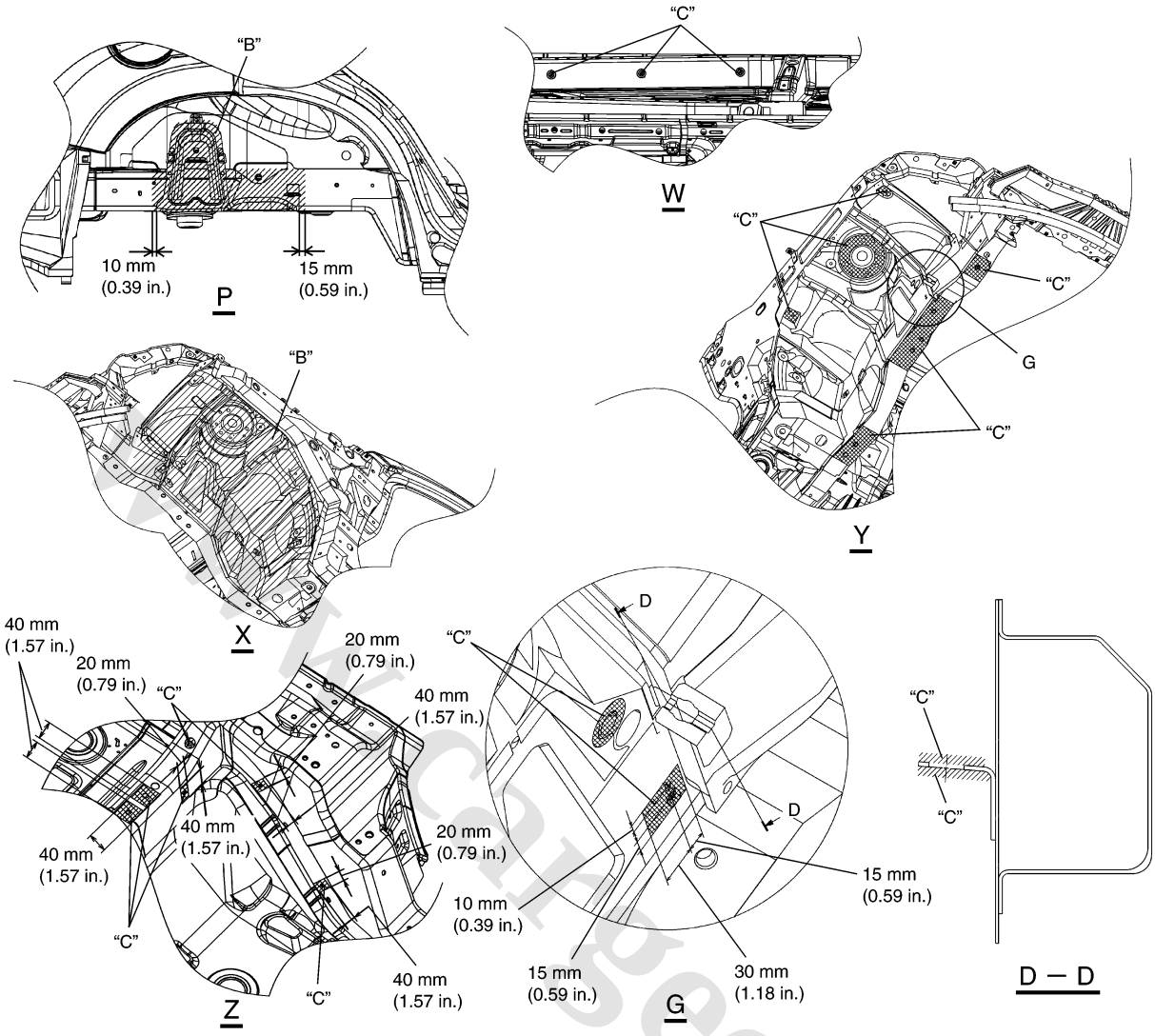


I5JB0A9C0012-01

| | |
|---|---|
| "A": Apply undercoating (PVC, 400 μm or more). | "C": Do not apply undercoating. |
| "B": Apply black painting. | |

www.cargeek.ir

www.CarGeek.ir

## 3 Door Model

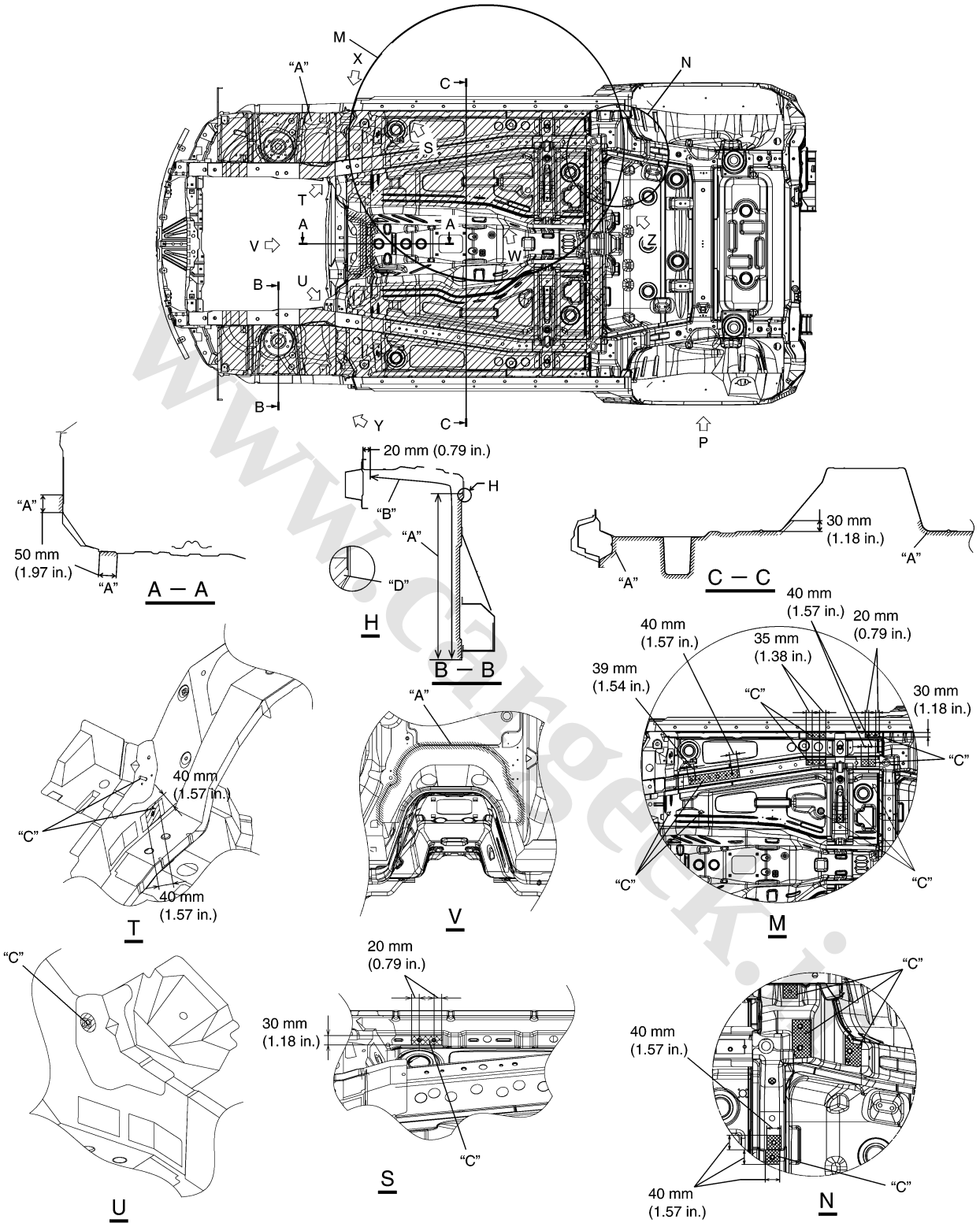


I5JB0A9C0013-01

| | |
|---|---|
| "A": Apply undercoating (PVC, 400 μm or more). | "C": Do not apply undercoating. |
| "B": Apply black painting. | "D": Apply undercoating (PVC, 400 μm or more) covering flange end. |

www.cargeek.ir

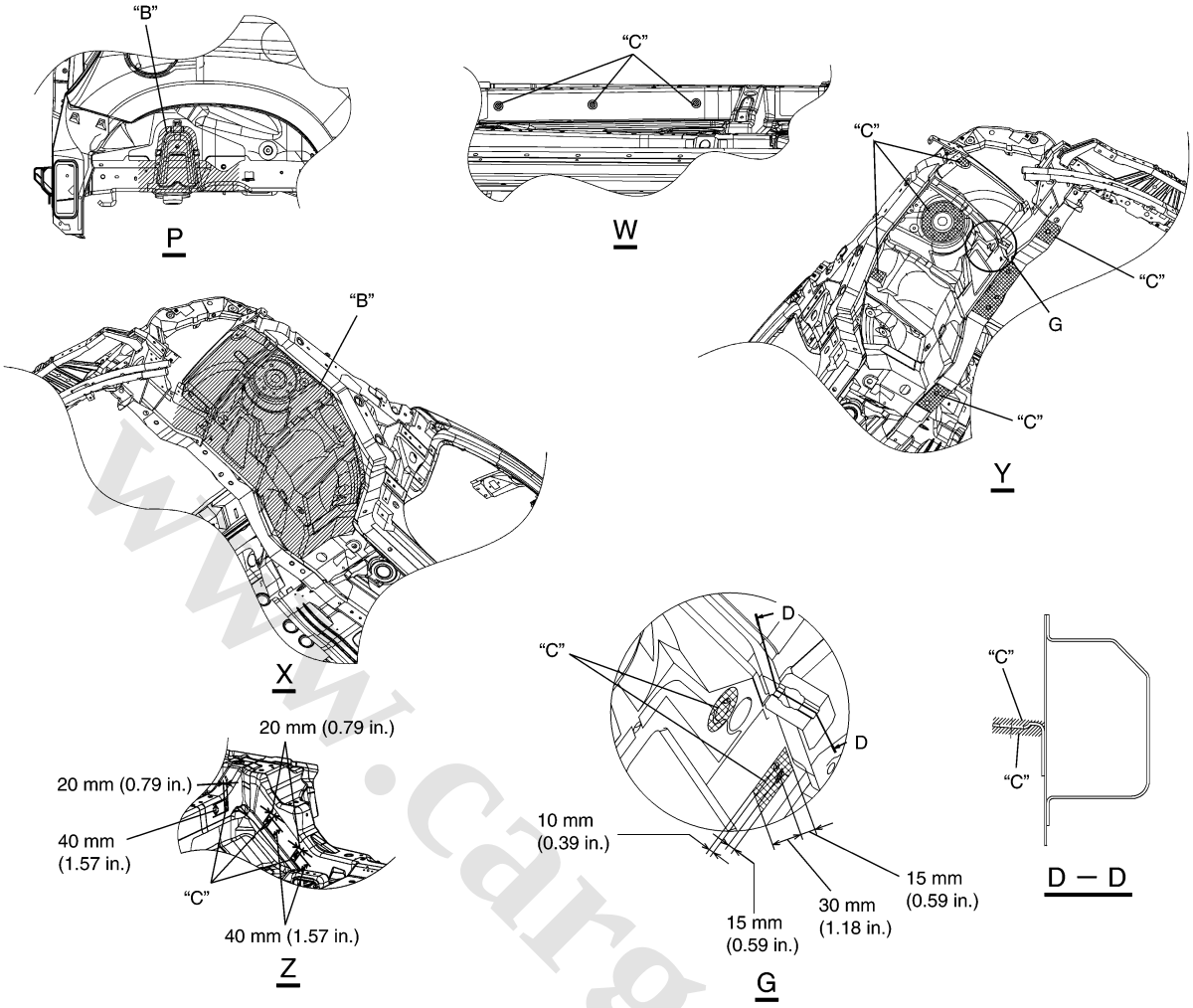


I5JB0A9C0014-01

| | |
|---|---|
| "A": Apply undercoating (PVC, 400 μm or more). | "C": Do not apply undercoating. |
| "B": Apply black painting. | |

www.cargeek.ir

www.CarGeek.ir

## Anti-Corrosion Compound Application Area

S5JB0A9C03003

### 5 Door Model

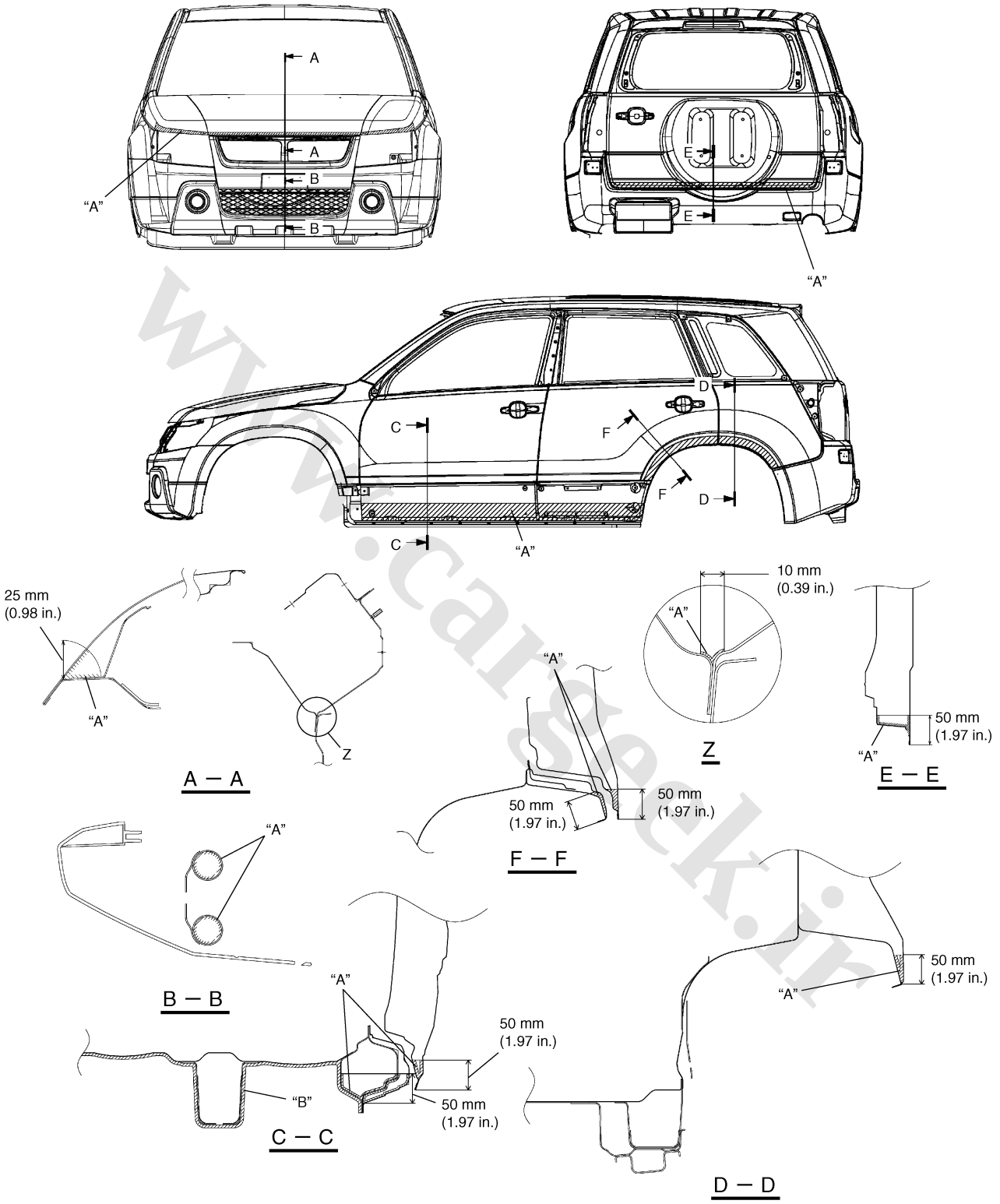


I5JB0A9C0015-01

| | |
|---|---|
| "A": | Apply rust proof wax (hot wax 50 μm or more). |
| "B": | Apply rust proof wax (high viscosity wax 50 μm or more). |

www.cargeek.ir

### 3 Door Model

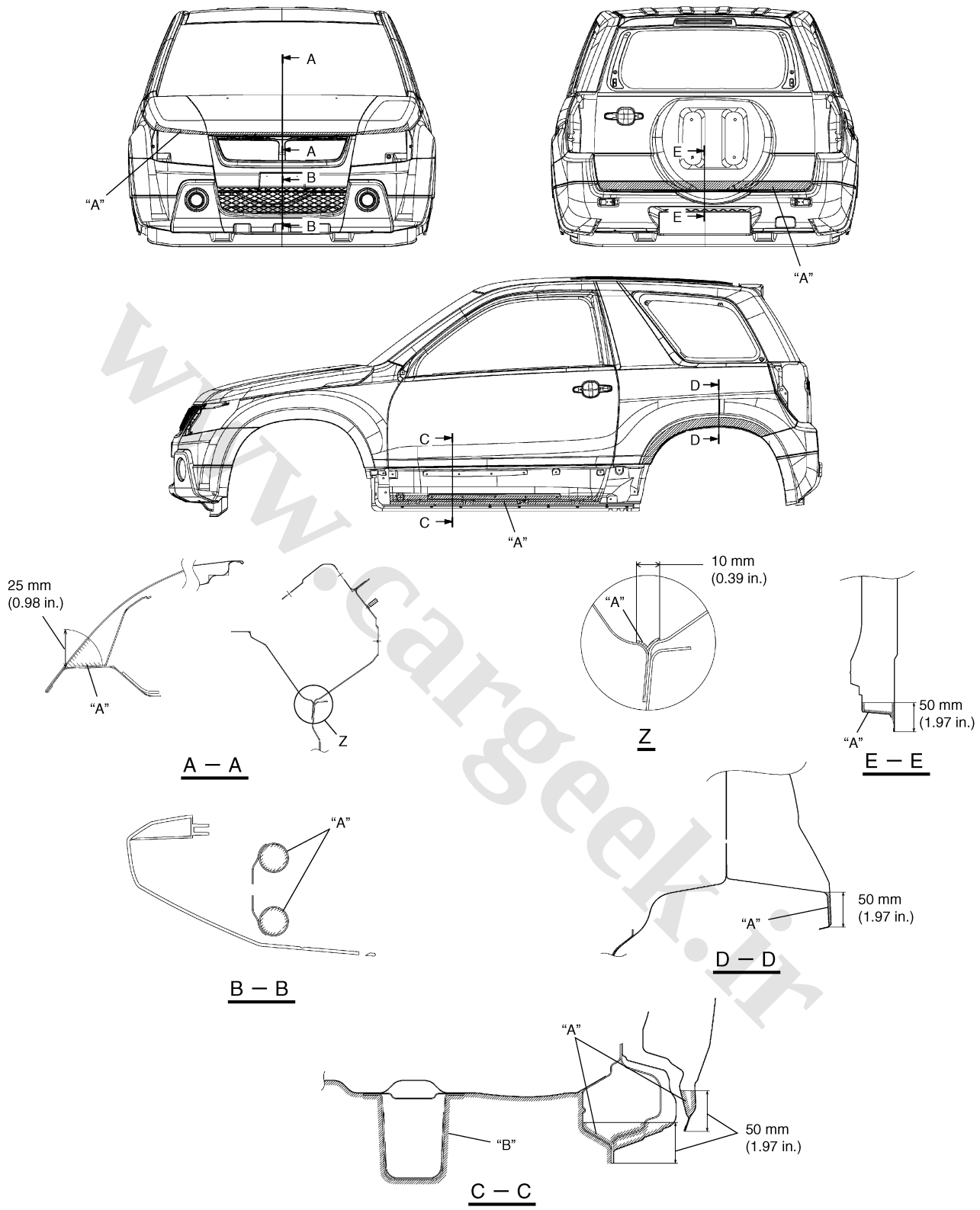


I5JB0A9C0016-01

| | |
|---|---|
| "A": | Apply rust proof wax (hot wax 50 μm or more). |
| "B": | Apply rust proof wax (high viscosity wax 50 μm or more). |

www.cargeek.ir

www.CarGeek.ir

# Exterior Trim

## Repair Instructions

### Roof Drip Molding Removal and Installation (If Equipped)

S5JB0A9D06005

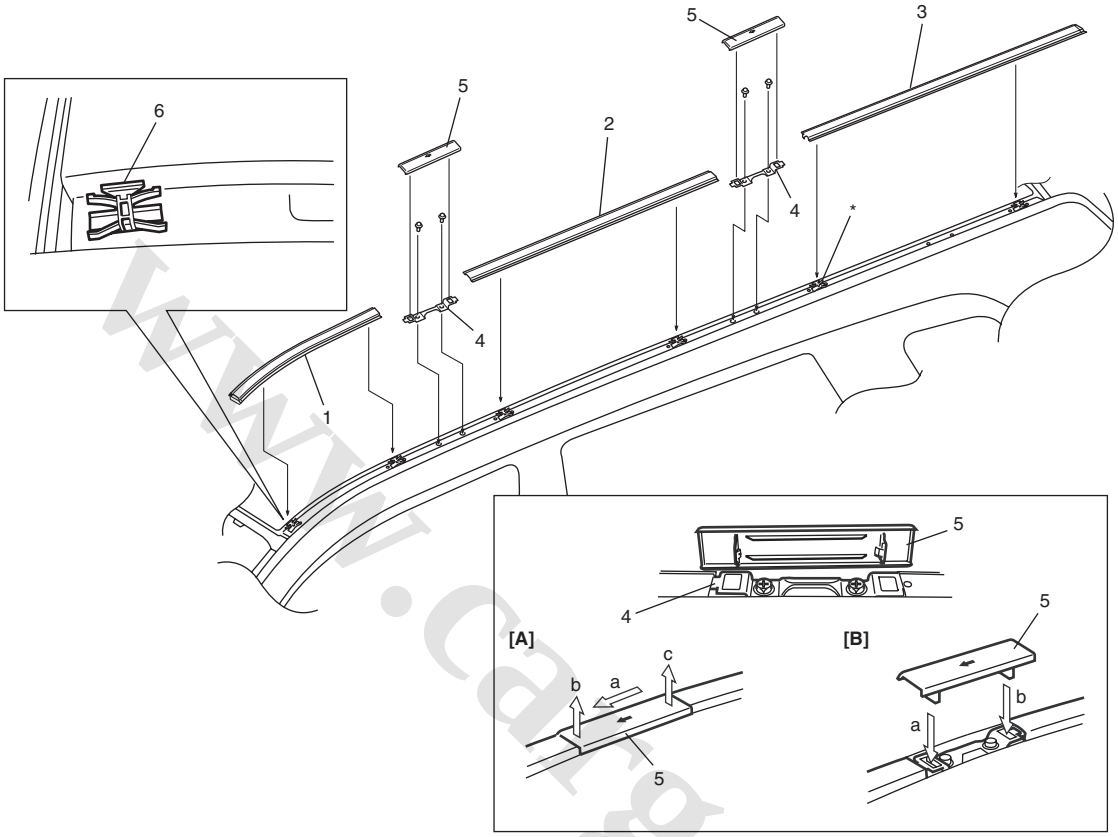


I5JB0A9D0001-02

| | |
|---|---|
| [A]: Molding Cap Removal<br>Remove cap by pushing in arrow direction shown on cap and then pulling in alphabetical order indicated in figure. | 4. Roof carrier bracket |
| [B]: Molding Cap Installation<br>Be sure to direct arrow mark of left side molding cap to vehicle forward and arrow mark of right side molding cap to vehicle rearward. | 5. Roof drip molding cap |
| 1. Roof drip front molding | 6. Roof drip molding clip (Push-in type) |
| 2. Roof drip center molding | *: 5 door model only |
| 3. Roof drip rear molding | |

www.cargeek.ir

www.CarGeek.ir


## Roof Rail Removal and Installation (If Equipped)

S5JB0A9D06007

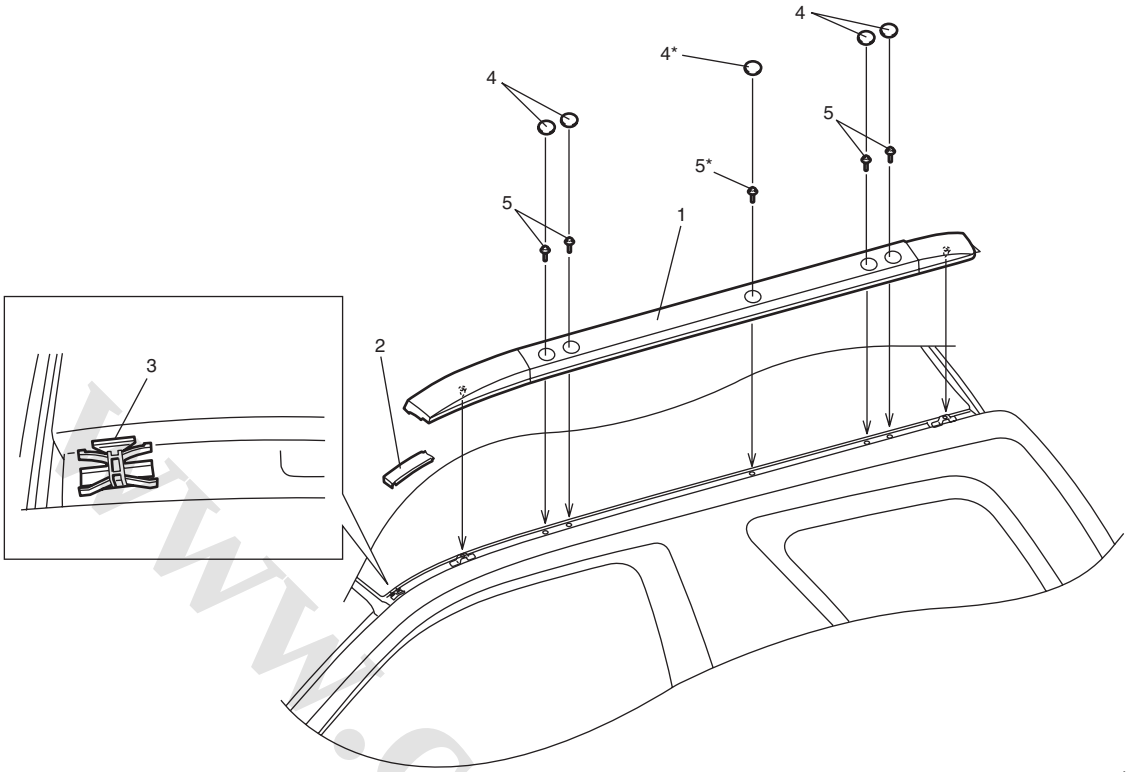


I5JB0A9D0002-03

| | | |
|---|---|---|
| 1. Roof rail | 3. Roof drip molding clip (Push-in type) | 5. Roof rail bolt |
| 2. Roof drip front molding | 4. Roof rail cap | *: 5 door model only |

www.cargeek.ir

www.CarGeek.ir

## Splash Guard Removal and Installation (If Equipped)

S5JB0A9D06006

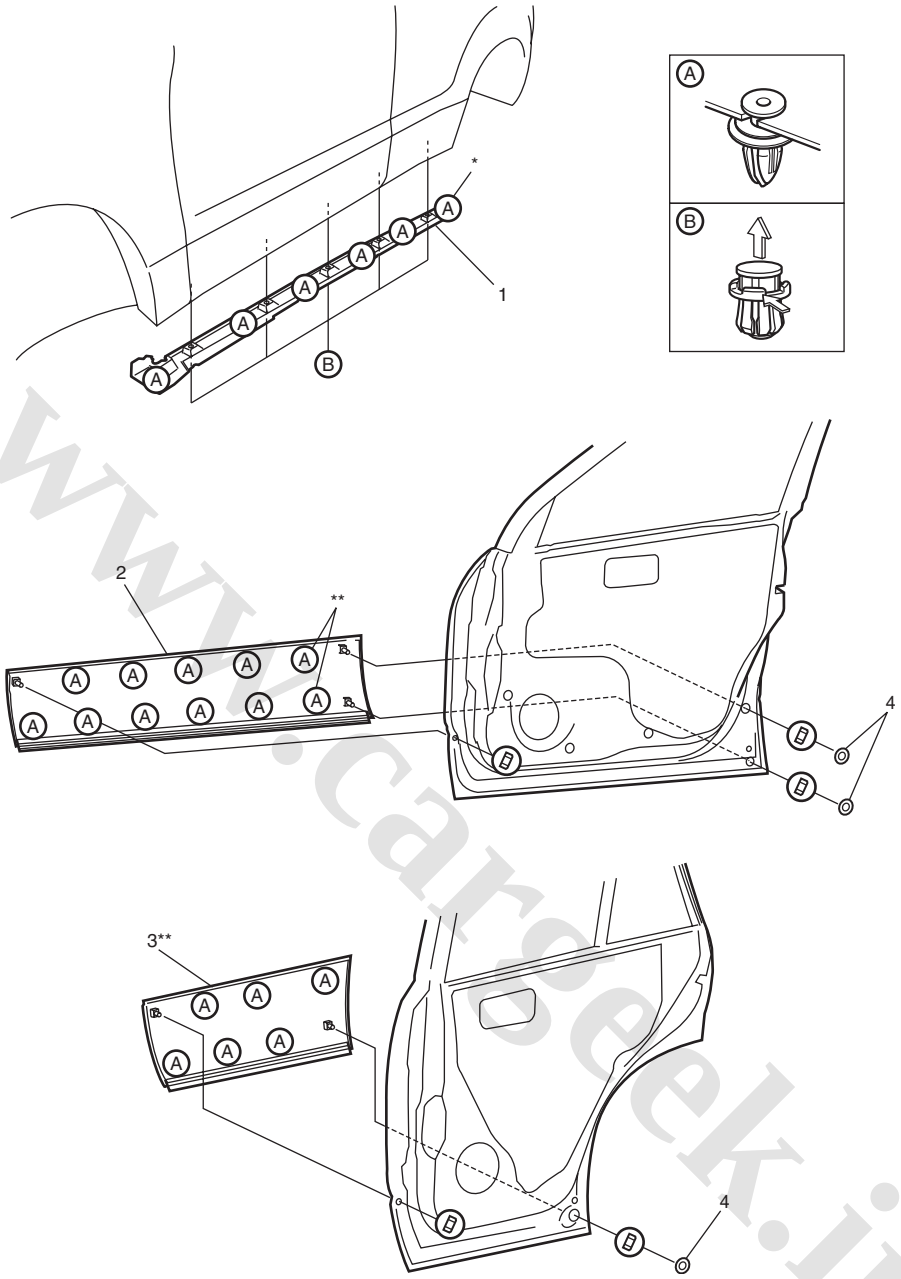


I5JB0A9D0003-02

| | | |
|---|---|---|
| 1. Side sill splash guard | 3. Rear door splash guard | *: 3 door model only |
| 2. Front door splash guard | 4. Cap | **: 5 door model only |

www.cargeek.ir

www.CarGeek.ir


# Section 10

# Control systems

## CONTENTS


**Precautions ..... 10-1**
- **Precautions ..... 10-1**
  - Precautions for Control Systems ..... 10-1

**Cruise Control System ..... 10A-1**
- **General Description ..... 10A-1**
  - Cruise Control System Construction ..... 10A-1
  - Components and Functions of Cruise Control System ..... 10A-2
  - Cancel Conditions of Cruise Control System ..... 10A-3
  - Input / Output Diagram ..... 10A-3
- **Schematic and Routing Diagram ..... 10A-4**
  - Cruise Control System Wiring Diagram ..... 10A-4
- **Diagnostic Information and Procedures ..... 10A-5**
  - Cruise Control System Symptom Diagnosis ..... 10A-5
  - Inspection of Cruise Control System Circuit ..... 10A-6
- **Repair Instructions ..... 10A-8**
  - Cruise Control Switch Removal and Installation ..... 10A-8
  - Cruise Control Switch Inspection ..... 10A-8
  - CPP Switch (for Cruise Control) Removal and Installation ..... 10A-8
  - Clutch Pedal Position (CPP) Switch (for Cruise Control) Inspection and Adjustment ..... 10A-9
  - Stop (Brake) Lamp Switch Removal and Installation ..... 10A-9
  - Stop (Brake) Lamp Switch Inspection ..... 10A-9
  - ECM Removal and Installation ..... 10A-9
- **Specifications ..... 10A-9**
  - Tightening Torque Specifications ..... 10A-9

**Body Electrical Control System ..... 10B-1**
- **Precautions ..... 10B-1**
  - Precautions in Diagnosing Trouble ..... 10B-1
- **General Description ..... 10B-1**
  - BCM General Description ..... 10B-1
  - CAN Communication for BCM ..... 10B-1
- **Schematic and Routing Diagram ..... 10B-2**
  - Body Electrical Control System Wiring Circuit Diagram ..... 10B-2
  - Connector Layout Diagram of BCM ..... 10B-4
- **Component Location ..... 10B-5**
  - BCM and Related System Component Location ..... 10B-5
- **Diagnostic Information and Procedures ..... 10B-6**
  - BCM Self-Diagnosis Function ..... 10B-6
  - Body Electrical Control System Check ..... 10B-8
  - Scan Tool Data ..... 10B-10
  - DTC Table ..... 10B-11
  - DTC Check ..... 10B-12
  - DTC Clearance ..... 10B-13
  - BCM Power Circuit and Ground Circuit Check ..... 10B-14
  - DTC B1133 (DTC No. 1133): Battery Voltage Too High ..... 10B-15
  - DTC B1141 / DTC B1142 / DTC B1143 (No. 1141 / No. 1142/ No. 1143) Outside Air Temperature (Ambient Temp.) Sensor Circuit Malfunction ..... 10B-16
  - DTC B1150 (No. 1150): Air Bag Communication Circuit Malfunction ..... 10B-17
  - DTC B1157 (No. 1157) Air Bag Deployment Signal Input ..... 10B-19
  - DTC B1170 (No. 1170): EEPROM access error ..... 10B-19
  - DTC U1073 (No. 1073): Control Module Communication Bus Off ..... 10B-20
  - DTC U1100 (No. 1100): Lost Communication with ECM ..... 10B-23
  - DTC U1101 (No. 1101): Lost communication with TCM ..... 10B-25
  - DTC U1144 (No. 1144): Lost Communication with Keyless Start Control Module ..... 10B-27
  - Inspection of BCM and its Circuits ..... 10B-29
- **Repair Instructions ..... 10B-35**
  - BCM Removal and Installation ..... 10B-35
  - Outside Air Temperature Sensor Removal and Installation ..... 10B-35
  - Outside Air Temperature Sensor Inspection ..... 10B-36
- **Special Tools and Equipment ..... 10B-36**
  - Special Tool ..... 10B-36

**Immobilizer Control System ..... 10C-1**
- **Precautions ..... 10C-1**
  - Precautions in Diagnosing Troubles ..... 10C-1
  - Precaution in Replacing ECM ..... 10C-1
  - Precautions in Handling Immobilizer Control System ..... 10C-1
- **General Description ..... 10C-2**
  - Immobilizer Control System Introduction ..... 10C-2
  - Immobilizer Control System Components Location ..... 10C-2
  - On-Board Diagnostic System Description (Self-diagnosis Function) ..... 10C-3
- **Schematic and Routing Diagram ..... 10C-4**




www.cargeek.ir

www.CarGeek.ir

Immobilizer Control System Wiring Circuit Diagram ....10C-4
**Diagnostic Information and Procedures ....10C-5**
Immobilizer Control System Check ....10C-5
Diagnostic Trouble Code (DTC) Check....10C-6
Diagnostic Trouble Code (DTC) Clearance ....10C-6
Diagnostic Trouble Code (DTC) Table....10C-6
Scan Tool Data ....10C-7
Immobilizer Indicator Lamp Does Not Come ON with Ignition Switch ON and Engine Stop....10C-8
Immobilizer Indicator Lamp Remains ON after Engine Start ....10C-9
DTC P1614: Transponder Response Error....10C-9
DTC P1615: Steering Lock Unit Communication Error (for Vehicle with Keyless Start System)....10C-10
DTC P1616: Unregistered Keyless Start Control Module (for Vehicle with Keyless Start System) ....10C-13
DTC P1618: Keyless Start Control Module CAN Communication Error (for Vehicle with Keyless Start System)....10C-13
DTC P1621: Immobilizer Communication Line Error ....10C-15
DTC P1622: EEPROM Error....10C-18
DTC P1623: Unregistered Transponder ....10C-18
DTC P1625: Immobilizer Antenna Error....10C-19
DTC P1636: Immobilizer Information Registration Failure ....10C-20
DTC P1638: Immobilizer Information Mismatched....10C-21
Inspection of Immobilizer Control Module (ICM) and Its Circuit ....10C-22
**Repair Instructions ....10C-24**
Immobilizer Control Module (ICM) Removal and Installation ....10C-24
Registration of the Ignition Key ....10C-24
Procedure after ECM Replacement ....10C-24
**Special Tools and Equipment ....10C-25**
Special Tool ....10C-25

## Keyless Start System ....10E-1

**General Description ....10E-1**
Keyless Start System Description ....10E-1
Parts and Functions ....10E-2
Keyless Engine Start Function ....10E-3
Door Lock Function of Keyless Start System....10E-4
Operation Area of Remote Controller....10E-5
Alarm Function ....10E-6
CAN Communication of Keyless Start System ....10E-6
**Schematic and Routing Diagram ....10E-7**
Keyless Start System Electric Wiring Circuit Diagram ....10E-7
**Diagnostic Information and Procedures ....10E-8**
Precautions in Diagnosing Troubles ....10E-8
Self-Diagnosis Function ....10E-8
Keyless Start System Diagnosis Introduction ....10E-8
Keyless Start System Check....10E-8
Customer questionnaire (example)....10E-9
Key Indicator Lamp Check ....10E-10
DTC Check....10E-10
DTC Table....10E-11
DTC Clearance ....10E-12
Keyless Start System Symptom Diagnosis ....10E-12
Keyless Start System Operation Inspection....10E-13
Door Lock Operation (Keyless Start System)....10E-14
Inspection of Keyless Start Control Module and Its Circuits ....10E-14
No DTC Detection After Performing DTC Check ....10E-19
Key Indicator Lamp Circuit Check (Key indicator lamp doesn't light when ignition knob switch is pushed.)....10E-21
Keyless Start Control Module Power and Ground Circuit Check....10E-22
DTC No. 11: Communication Error with Steering Lock Unit....10E-23
DTC No. 13 / No. 14: Release Signal Error from Steering Lock Unit / Steering Lock Unit Malfunction ....10E-25
DTC No. 21 / No. 22: Internal Error of Keyless Start Control Module (EEPROM reading error) / (EEPROM writing error) ....10E-25
DTC No. 31: Lost Communication with BCM ..10E-26
DTC No. 33: Control Module Communication Bus Off ....10E-28
DTC No. 51 / No. 52 / No. 53: Driver Side / Passenger Side / Rear End Door Request Switch Failure....10E-30
**Repair Instructions ....10E-32**
Antennas and Request Switches Removal and Installation ....10E-32
Front Door (Driver and Passenger Side) Rear End Door Request Switch Inspection...10E-33
Steering Lock Unit Removal and Installation ..10E-33
Steering Lock Unit Inspection ....10E-33
Front Door Lock Switch Inspection ....10E-33
Keyless start control module Removal and Installation ....10E-34
Remote Controller Inspection....10E-34
Replacement of Remote Controller Battery ....10E-34
Registration Procedure for Remote Controller ID Code ....10E-35

www.cargeek.ir

www.CarGeek.ir


# Precautions

## Precautions

### Precautions for Control Systems

S5JB0AA000001

**Air Bag Warning**

Refer to “Air Bag Warning:  in Section 00”.

www.cargeek.ir

www.cargeek.ir

www.CarGeek.ir

# Cruise Control System

## General Description

### Cruise Control System Construction

S5JB0AA101001

The cruise control system is a device which maintains a preset vehicle speed while driving at a high speed, e.g., on a highway. It allows the driver to drive his vehicle at a constant speed of 40 km/h (25 mile/h) or higher without depressing the accelerator pedal. The system also has such functions as to change the vehicle speed without operating the accelerator pedal (but using SET/COAST and RES/ACC switches), cancel cruise control (CANCEL switch) and resume the speed in memory automatically after cruise control is cancelled (RES/ACC switch). The system mainly consists of electric throttle body assembly, ECM, cruise control switch (MAIN switch, SET/COAST switch, RES/ACC switch and CANCEL switch), etc.

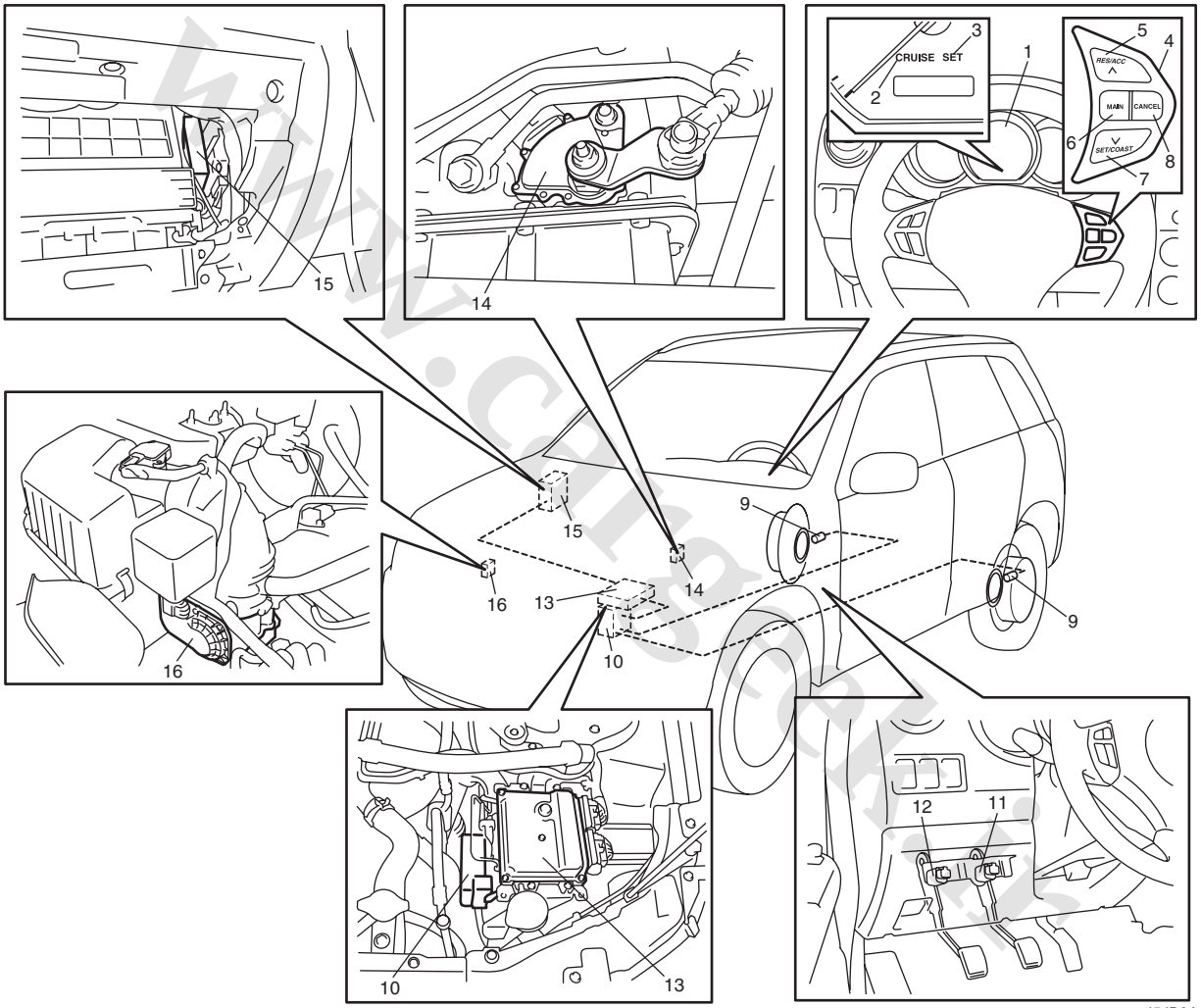


I5JB0AA10001-01

| | | |
|---|---|---|
| 1. Combination meter | 7. SET/COAST switch | 13. ECM |
| 2. “CRUISE” indicator lamp | 8. CANCEL switch | 14. Transmission range switch (A/T vehicle only) |
| 3. “SET” indicator lamp | 9. Wheel speed sensor (vehicle speed signal) | 15. TCM (A/T vehicle only) |
| 4. Cruise control switch assembly | 10. ABS hydraulic unit / control module | 16. Electric throttle body assembly |
| 5. RES/ACC switch | 11. Brake light switch with brake pedal position switch | |
| 6. MAIN switch | 12. Clutch pedal position switch (M/T vehicle only) | |

www.cargeek.ir

www.CarGeek.ir


## Components and Functions of Cruise Control System

S5JB0AA101002

| Component | Function |
|---|---|
| ECM and electric throttle body assembly | ECM executes centralized control over all functions including setting a constant speed, resuming it, setting coast, cancelling cruise control limiting minimum speed.<br>ECM controls electric throttle valve opening to keep actual vehicle speed at set (target) speed. |
| MAIN switch | This switch has a momentary contact type button to press cruise control system ON and OFF. |
| SET/COAST switch | When this switch is pressed (ON) and then released (OFF) while vehicle is running at a speed 40 km/h (25 mile/h) or higher, vehicle speed at that OFF moment is stored in memory and it is maintained (constant cruising).<br>Pressing this switch (ON) continuously during constant cruising keeps slowing down vehicle speed as long as it is ON. When it is released (OFF), vehicle speed at that moment is stored in memory and vehicle starts constant cruising. |
| RES/ACC switch | When this switch is pressed (ON) during constant cruising, vehicle speed keeps increasing as long as it is ON. When it is released (OFF), vehicle speed at that moment is stored in memory and vehicle starts constant cruising. If vehicle speed is higher than 40 km/h (25 mile/h) after cruise control is cancelled, pressing this switch ON momentarily will resume the speed at which vehicle was running before cancellation. |
| CANCEL switch | When this switch is pressed (ON), cruise control (throttle valve control) is cancelled. |
| Wheel speed sensor (vehicle speed signal) | ECM receives speed sensor signal from ABS hydraulic unit / control module through CAN communication and calculates vehicle speed using that signal. |
| Brake light switch | Brake light switch has 2 contact points. One contact point closes when brake pedal is depressed to light brake light and provides a voltage signal to the ECM.<br>The other contact point (brake pedal position switch) opens when brake pedal is depressed, to shut off power to cruise control of ECM, thereby cancelling cruise control (throttle valve control).<br>This switch is installed to cancel cruise control (constant cruising). |
| Clutch pedal position switch (M/T vehicle only) | When clutch pedal is depressed, clutch pedal position switch closes and provides a ground signal to ECM.<br>ECM cancels cruise control (throttle valve control) when this signal is inputted. |
| Transmission range switch (A/T vehicle only) | When selector lever is placed in either “P”, “R” or “N” position, transmission range switch closes and provides a ground signal to TCM. TCM transmits signal from transmission range switch to ECM through CAN communication. When ECM receives a signal indicating that selector lever position is “P”, “R” or “N”, it cancels cruise control (throttle valve control). |
| TCM | TCM receives the SET signal for the cruise control from ECM through CAN communication. When TCM receives the SET signal from ECM, the gear shift control is performed by using the gear shift map for the cruise control changed from the one for normal gear shift. For details, refer to “Automatic Gear Shift Table: in Section 5A”. |
| “CRUISE” indicator lamp | In the state with ignition switch ON and cruise control system OFF, pressing MAIN switch once and releasing it will activate the cruise control system and ECM will cause indicator lamp to light up. |
| “SET” indicator lamp | It lights up when cruise control (throttle valve control) is functioning. |

www.cargeek.ir

www.CarGeek.ir

## Cancel Conditions of Cruise Control System

S5JB0AA101003

Constant cruising is cancelled under the following conditions.

- *Ignition switch is turned OFF.
- MAIN switch is turned OFF.
- Vehicle speed becomes lower than minimum operating speed (40 km/h (25 mile/h)).
- *Vehicle speed varies beyond cancel speed range (–10 km/h (–6 mile/h)) from preset speed.
- *Brake pedal is depressed. (Brake light switch is turned ON).
- *Clutch pedal is depressed (Clutch pedal position switch is turned ON) (For M/T vehicle).
- *Selector lever is shifted to “P”, “R” or “N” range.
- *CANCEL switch is turned ON.

**NOTE**

**When constant cruising is cancelled under any condition with * (asterisk), vehicle speed before cancellation can be resumed by operating RES/ACC switch, provided that vehicle speed is higher than 40 km/h (25 mile/h).**

## Input / Output Diagram

S5JB0AA101004

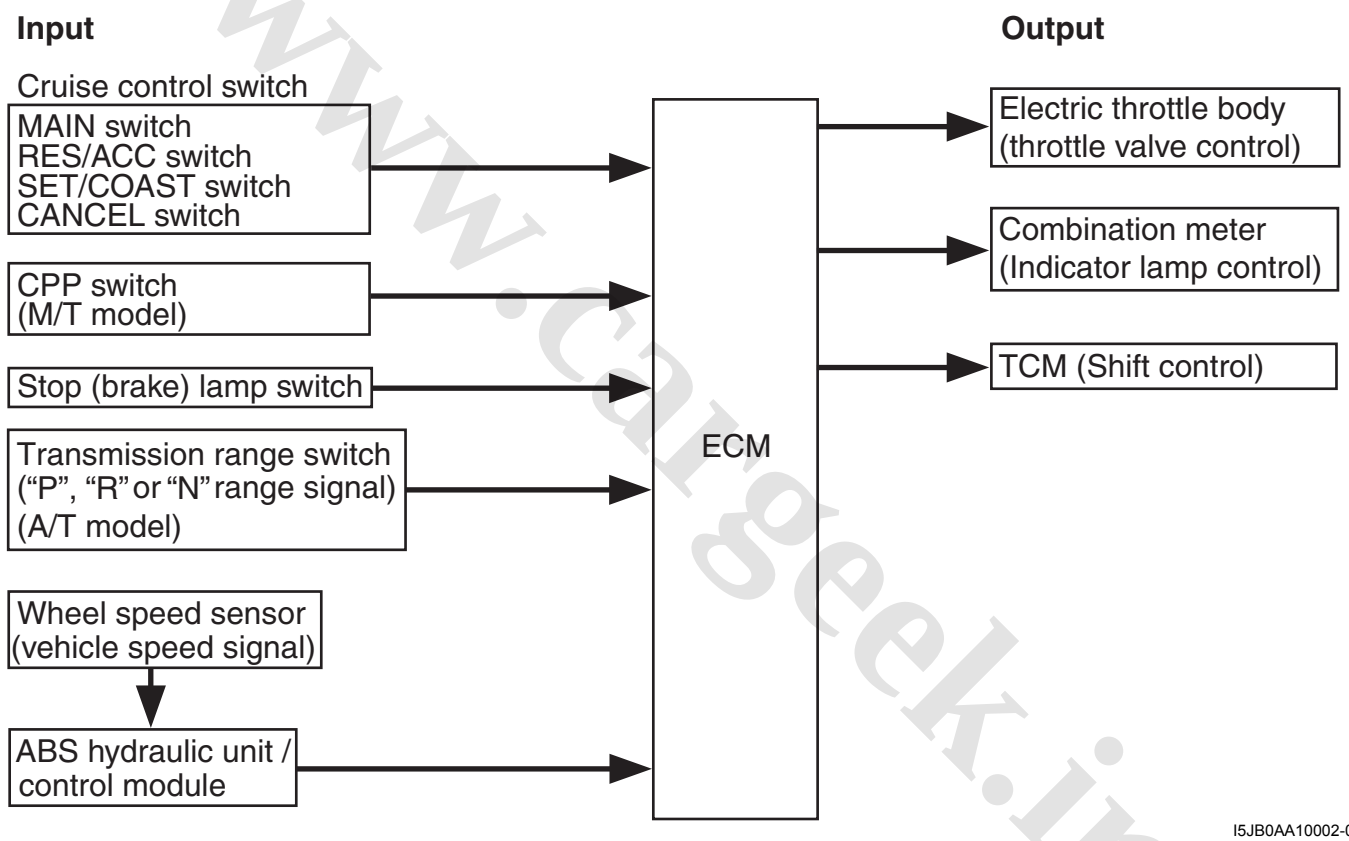


I5JB0AA10002-04

www.cargeek.ir

www.CarGeek.ir


# Schematic and Routing Diagram

## Cruise Control System Wiring Diagram

S5JB0AA102001

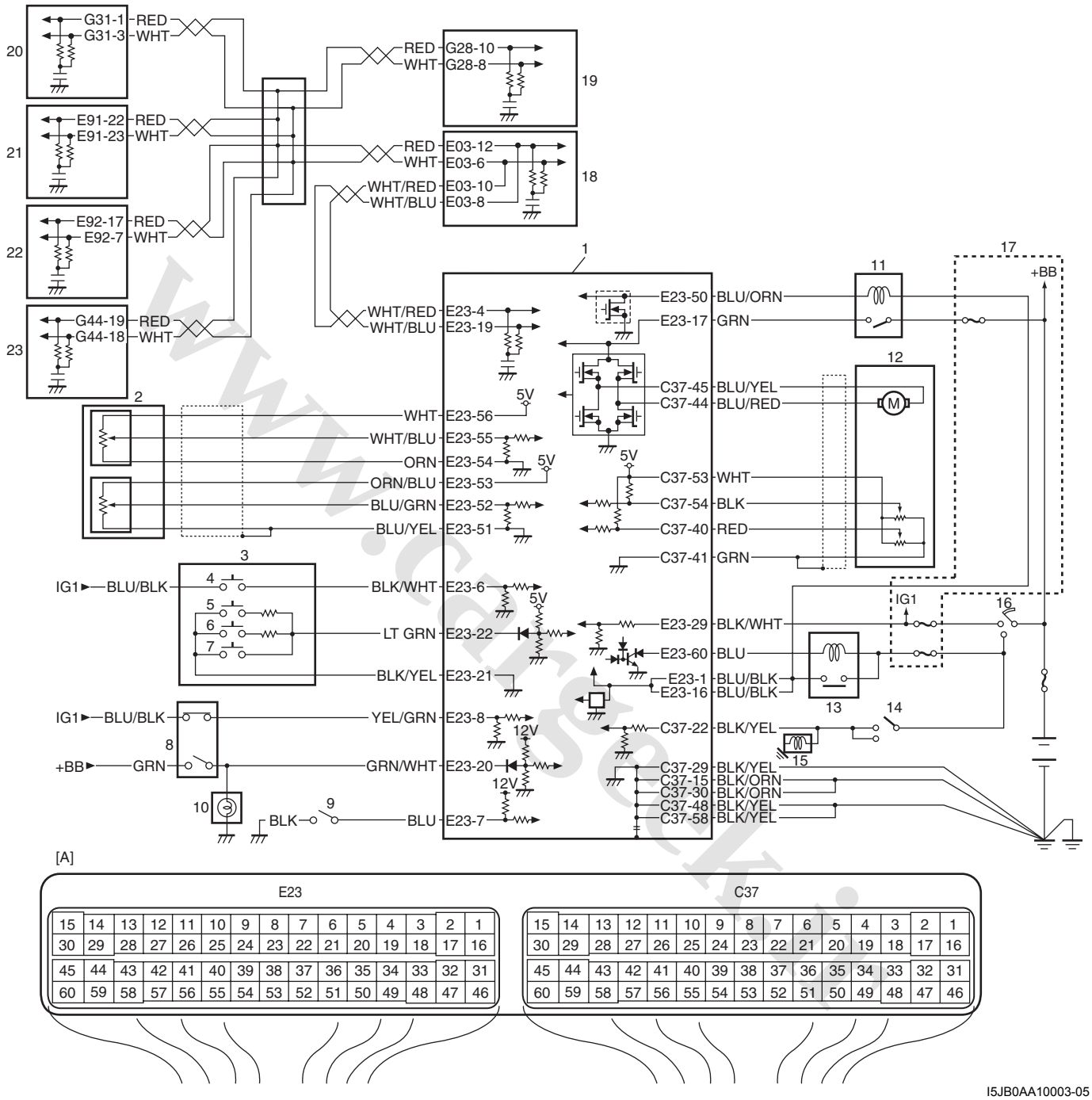


I5JB0AA10003-05

| | | |
|---|---|---|
| [A]: ECM connector (viewed from harness side) | 8. Stop (brake) lamp switch | 16. Ignition switch |
| 1. ECM | 9. CPP switch | 17. Junction block assembly |
| 2. Accelerator pedal position sensor | 10. Brake lamp | 18. ABS hydraulic unit / control module |
| 3. Cruise control switch assembly | 11. Electric throttle valve relay | 19. Combination meter |
| 4. MAIN switch | 12. Electric throttle body assembly | 20. BCM |
| 5. RES/ACC switch | 13. Main relay | 21. 4WD control module (if equipped) |
| 6. SET/COAST switch | 14. Transmission range switch | 22. TCM (if equipped) |
| 7. CANCEL switch | 15. Starting motor | 23. Keyless start control module (if equipped) |

www.cargeek.ir

 www.CarGeek.ir

# Diagnostic Information and Procedures

## Cruise Control System Symptom Diagnosis

S5JB0AA104001

**NOTE**

- **ECM uses TCM, ABS hydraulic unit/control module and CAN communication to transmit and receive data for cruise control. Therefore, check that no DTC is detected from ECM, TCM or ABS hydraulic unit / control module before performing this Cruise Control System Symptom Diagnosis. If DTC is detected, correct trouble indicated by that DTC first.**
- **Check each part in the order from the top of the following list.**

| Condition | Possible cause | Correction / Reference Item |
|---|---|---|
| ***CRUISE or SET indicator lamp does not turn ON or OFF*** | MAIN switch faulty | *Check MAIN switch for function referring to "Cruise Control Switch Inspection: ".* |
| | SET/COAST switch faulty | *Check SET/COAST switch for function referring to "Cruise Control Switch Inspection: ".* |
| | Wiring or grounding faulty | *Repair.* |
| | Combination meter faulty | *Replace.* |
| | ECM faulty | *Replace after making sure that none of above parts is faulty.* |
| ***Vehicle speed can not be set*** | MAIN switch faulty | *Check MAIN switch for function referring to "Cruise Control Switch Inspection: ".* |
| | SET/COAST switch faulty | *Check SET/COAST switch for function referring to "Cruise Control Switch Inspection: ".* |
| | Brake (stop) Lamp switch faulty | *Check brake (stop) lamp switch for function referring to "Stop (Brake) Lamp Switch Inspection: ".* |
| | CPP switch faulty (M/T model) | *Check CPP switch for function referring to "Clutch Pedal Position (CPP) Switch (for Cruise Control) Inspection and Adjustment: ".* |
| | Wiring or grounding faulty | *Repair.* |
| | ECM faulty | *Replace after making sure that none of above parts is faulty.* |
| ***Acceleration or deceleration is not available by using RES/ ACC or SET/COAST switch*** | RES/ACC or SET/COAST switch faulty | *Check RES/ACC or SET/COAST switch for function referring to "Cruise Control Switch Inspection: ".* |
| | Wiring or grounding faulty | *Repair.* |
| | ECM faulty | *Replace after making sure that none of above parts is faulty.* |
| ***Cruise control cannot be cancelled*** | CANCEL switch faulty | *Check CANCEL switch for function referring to "Cruise Control Switch Inspection: ".* |
| | Stop (brake) lamp switch faulty | *Check brake (stop) lamp switch for function referring to "Stop (Brake) Lamp Switch Inspection: ".* |
| | CPP switch faulty | *Check CPP switch for function referring to "Clutch Pedal Position (CPP) Switch (for Cruise Control) Inspection and Adjustment: ".* |
| | Wiring or grounding faulty | *Repair.* |
| | ECM faulty | *Replace after making sure that none of above parts is faulty.* |
| ***Cruise control at vehicle speed stored in memory cannot be resumed after cruise control was cancelled by means other than MAIN switch*** | RES/ACC switch faulty | *Check RES/ACC switch for function referring to "Cruise Control Switch Inspection: ".* |
| | Wiring or grounding faulty | *Repair.* |
| | ECM faulty | *Replace after making sure that none of above parts is faulty.* |

www.cargeek.ir

www.CarGeek.ir


## Inspection of Cruise Control System Circuit

S5JB0AA104012

Cruise control system is controlled by ECM. Each switch and circuit can be checked by taking measurement of terminal voltage and terminal to terminal resistance of ECM. When measuring these values, be sure to read precautions for measurement described under “Inspection of ECM and Its Circuits: in Section 1A”.

### Voltage Check

Check voltage between the following terminals with ECM connector connected.

**Terminal arrangement of ECM connector viewed from harness side**

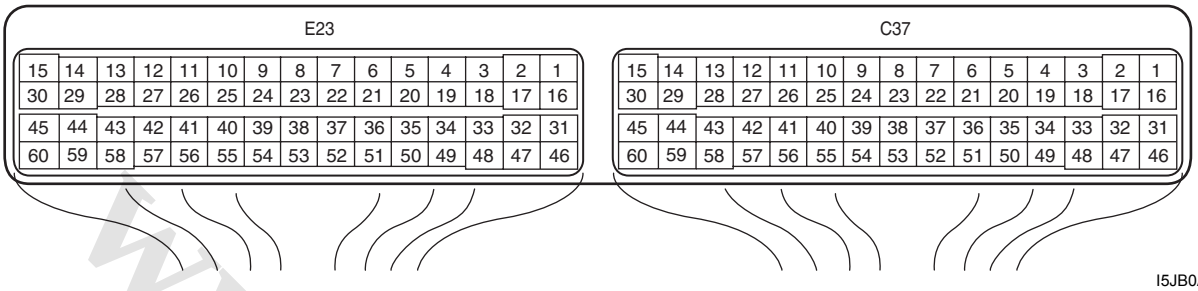


I5JB0AA10004-01

| Terminals | Circuit | Normal Voltage | Condition |
|---|---|---|---|
| E23-7 – ground | CPP switch circuit | 10 – 14 V | Ignition switch is at ON position and clutch pedal is not depressed. |
| | | 0 V | Ignition switch is at ON position and clutch pedal is depressed. |
| E23-8 – ground | Stop (Brake) lamp switch circuit | 10 – 14 V | Ignition switch is at ON position and brake pedal is not depressed. |
| | | 0 V | Ignition switch is at ON position and brake pedal is depressed. |
| E23-20 – ground | Stop (Brake) lamp switch circuit | 0 V | Ignition switch is at ON position and brake pedal is not depressed. |
| | | 10 – 14 V | Ignition switch is at ON position and brake pedal is depressed. |

www.cargeek.ir

www.CarGeek.ir

**Resistance Check**

1) Remove driver air bag (inflator) module from steering wheel referring to “Driver Air Bag (Inflator) Module Removal and Installation: in Section 8B”.
2) Measure resistance between the following terminals with ECM connector disconnected.

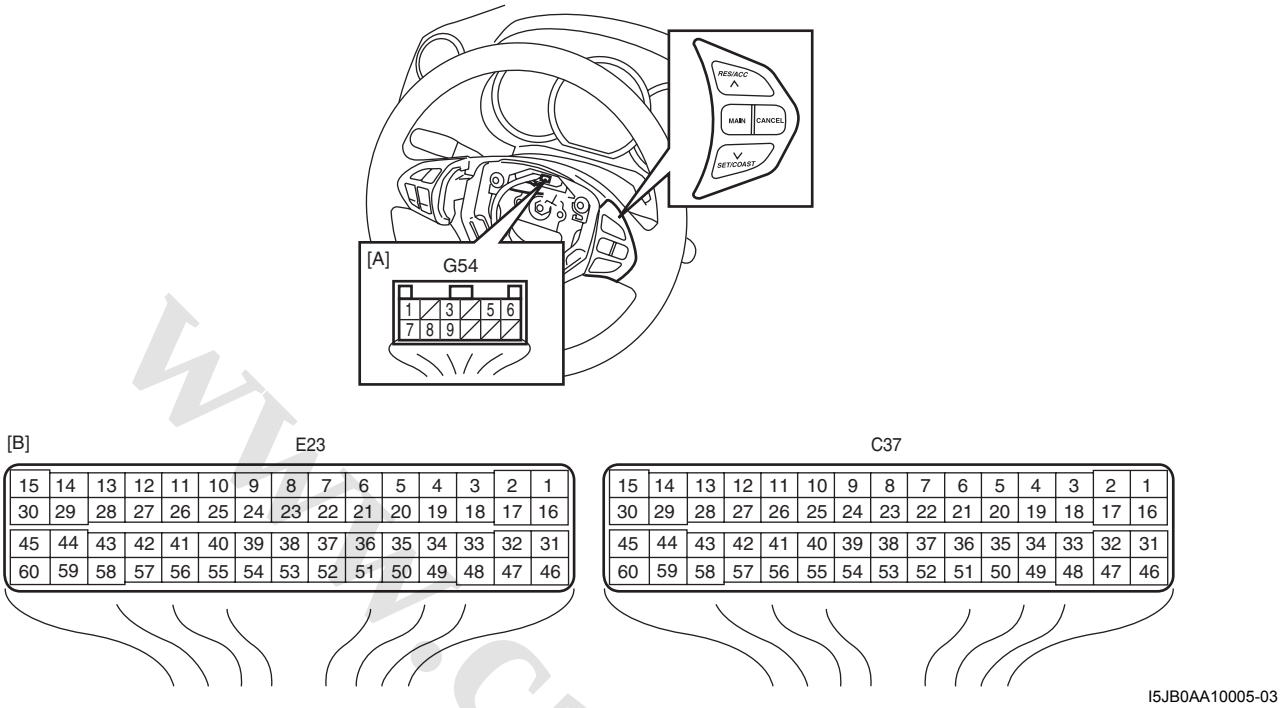


| [A]: Cruise control switch connector (viewed from harness side) | [B]: ECM connector (viewed from harness side) |
|---|---|

| Terminals | Circuit | Standard Resistance | Condition |
|---|---|---|---|
| G54-1 – E23-6 | MAIN switch circuit | No continuity | MAIN switch is not pressed. |
| | | About 1 Ω | MAIN switch is pressed. |
| E23-21 – E23-22 | CANCEL switch circuit | No continuity | CANCEL switch is not pressed. |
| | | About 1.5 Ω | CANCEL switch is pressed. |
| | RES/ACC switch circuit | No continuity | RES/ACC switch is not pressed. |
| | | About 911 Ω | RES/ACC switch is pressed. |
| | SET/COAST switch circuit | No continuity | SET/COAST switch is not pressed. |
| | | About 222 Ω | SET/COAST switch is pressed. |

www.cargeek.ir

www.CarGeek.ir


# Repair Instructions

## Cruise Control Switch Removal and Installation

S5JB0AA106001

For removal and installation, refer to “Remote Audio Control Switch Removal and Installation: in Section 9C”.

## Cruise Control Switch Inspection

S5JB0AA106002

**NOTE**

**Never disassemble cruise control switch. Disassembly will spoil its original functions.**

1) Remove driver air bag (inflator) module referring to “Driver Air Bag (Inflator) Module Removal and Installation: in Section 8B”.
2) Disconnect cruise control switch connector (1) from control coil.
3) Check cruise control switch as follow.

**For MAIN Switch**

Check for continuity between “1” and “8” terminals under each condition below.
If check result is not satisfactory, replace cruise control switch (2).

**Cruise main switch (3) specification: [B]**
**Switch button released: Infinity**
**Switch button pressed: Continuity**

**For Set/Coast, Res/Acc and Cancel Switch**

Check for resistance between “7” and “9” terminals under each condition below.
If check result is not satisfactory, replace cruise control switch (2).

**SET/COAST, RES/ACC and CANCEL switches resistance: [C]**
**All switches released (OFF): Infinity**
**CANCEL switch (4) pressed (ON): About 0 Ω**
**SET/COAST switch (5) pressed (ON): 217 – 223 Ω**
**RES/ACC switch (6) pressed (ON): 900 – 920 Ω**

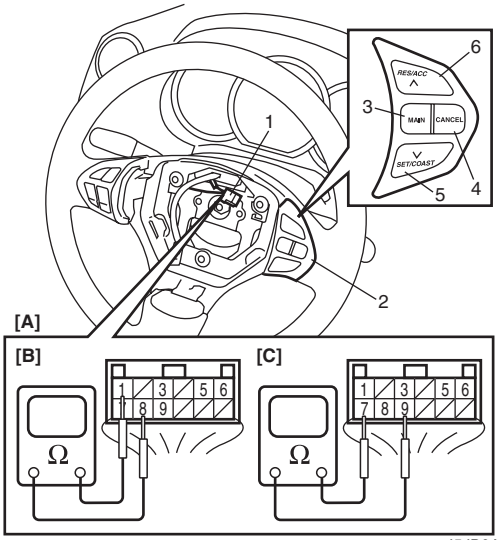


I5JB0AA10006-01

[A]: Cruise control switch connector viewed from harness side

## CPP Switch (for Cruise Control) Removal and Installation

S5JB0AA106003

**Removal**

1) Disconnect connector of CPP switch (for cruise control) (1) with ignition switch OFF.
2) Remove CPP switch (for cruise control) (1) from pedal bracket.

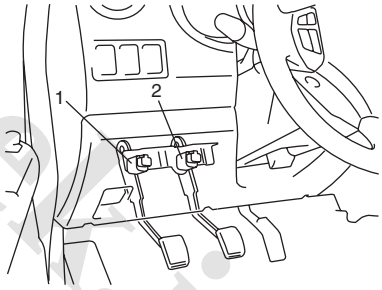


I5JB0AA10007-01

2. Brake light switch

www.cargeek.ir

www.CarGeek.ir

### Installation

1) Install CPP switch (for cruise control) (2) to pedal bracket.
2) With clutch pedal (1) released, adjust switch position so that clearance between end of thread and clutch pedal bracket is within specification.

   **Clearance between end of thread and clutch pedal bracket**
   **"a": 0.5 – 1.5 mm (0.02 – 0.059 in.)**

3) Tighten lock nut (3) to specified torque.

   **Tightening torque**
   **CPP switch lock nut (a): 7.5 N·m (0.75 kgf-m, 5.5 lb-ft)**

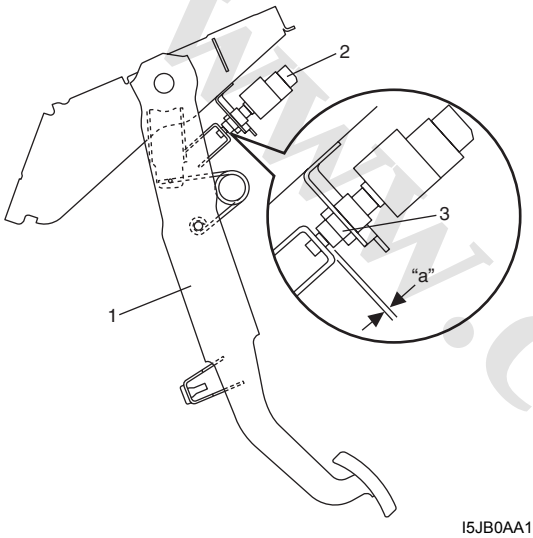


I5JB0AA10008-01

4) Connect connector to CPP switch (for cruise control) (2) securely.

## Clutch Pedal Position (CPP) Switch (for Cruise Control) Inspection and Adjustment

S5JB0AA106004

### Inspection

Check for resistance between terminals under each condition below. If check result is not satisfactory, replace.

**CPP switch (for cruise control) resistance**
**When switch shaft is pushed [A]: No continuity**
**When switch shaft is free [B]: Continuity**

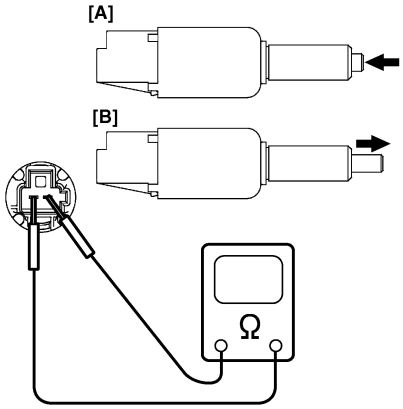


I5JB0AA10009-01

### Adjustment

For adjustment, refer to "Installation" under "CPP Switch (for Cruise Control) Removal and Installation: ".

## Stop (Brake) Lamp Switch Removal and Installation

S5JB0AA106007

For removal and installation, refer to "Brake Light Switch Adjustment: in Section 4A".

## Stop (Brake) Lamp Switch Inspection

S5JB0AA106005

Check for continuity between terminals referring to "Stop (Brake) Lamp Switch Inspection: in Section 9B".

## ECM Removal and Installation

S5JB0AA106006

For removal and installation, refer to "Engine Control Module (ECM) Removal and Installation: in Section 1C".

# Specifications

## Tightening Torque Specifications

S5JB0AA107001

| Fastening part | Tightening torque | | | Note |
|---|---|---|---|---|
| | N·m | kgf-m | lb-ft | |
| CPP switch lock nut | 7.5 | 0.75 | 5.5 | ☞ |

**Reference:**
For the tightening torque of fastener not specified in this section, refer to "Fastener Information: in Section 0A".

www.cargeek.ir

www.CarGeek.ir


# Body Electrical Control System

## Precautions

### Precautions in Diagnosing Trouble

S5JB0AA200001

- Diagnostic information stored in BCM memory can be cleared as well as checked by using SUZUKI scan tool. Before using scan tool, read its Operator's (Instruction) Manual carefully to have good understanding as to what functions are available and how to use it.
- Be sure to read "Precautions for Electrical Circuit Service: in Section 00" before inspection and observe what is written there.
- Communication of ECM, TCM (if equipped), BCM, ABS hydraulic unit/control module (if equipped), 4WD control module (if equipped), keyless start control module (if equipped) and combination meter is established by CAN (Controller Area Network). Therefore, be sure to read "Precaution for CAN Communication System: in Section 00" before inspection and handle CAN communication line.

## General Description

### BCM General Description

S5JB0AA201001

The BCM incorporates relays and controllers which are used for the following systems and controls them.

- Power door lock (if equipped)
- Keyless entry (if equipped)
- Door lock function of keyless start system (if equipped)
- Rear wiper
- Combination meter
- Interior light / luggage room light
- Warning buzzer
- Rear end door window defogger and door miller heater (if equipped)
- DRL (if equipped)
- Auto-on headlight (if equipped)
- Front fog light (if equipped)
- Alarm indicator lamp

Also, the BCM has a function to cause the interior light and open door warning lamp in the combination meter to turn off when any door is left open for longer than 15 minutes to reduce wasteful battery consumption.
In addition, it is possible to check operation of actuator which is controlled by BCM by using the output test function of SUZUKI scan tool to operate actuator simulatively.

### CAN Communication for BCM

S5JB0AA201002

BCM communicates with each of ECM, TCM (if equipped), keyless start control module (if equipped), 4WD control module (if equipped) and combination meter about the following data. For details of CAN communication, refer to "CAN Communication System Description: in Section 1A".

- Data which BCM receives from ECM
  - Engine speed signal
  - Engine coolant temperature signal
  - Vehicle speed signal
  - Immobilizer registration request signal
  - Stop (brake) lamp switch signal
  - Magnet clutch signal
  - A/C refrigerant pressure signal
  - Distance kilometers per liter of fuel signal
- Data which BCM receives from TCM
  - Transmission range sensor signal (A/T selector lever position)
- Data which BCM receives from keyless start control module
  - Ignition knob switch signal
  - Door lock/unlock request signal
  - Buzzer request for keyless start system
  - Answer back request signal

www.cargeek.ir

 www.CarGeek.ir

- Data which BCM receives from 4WD control module
  - Buzzer request for 4WD control system
- Data which BCM transmits to combination meter
  - Lighting switch signal
  - Brake fluid level switch signal (brake warning light control signal)
  - Parking brake switch signal (brake warning light control signal)
  - Seat belt buckle switch signal (seat belt reminder light control signal)
  - Charging system signal (charging system warning light control signal)
  - Engine oil pressure switch signal (engine oil low pressure warning light control signal)
  - POWER/NORMAL mode switch signal (POWER/NORMAL mode indicator control signal)
  - Illumination ON signal
- Data which BCM transmits to TCM
  - POWER/NORMAL mode switch signal (POWER/NORMAL mode indicator control signal)
- Data which BCM transmits to keyless start control module
  - Door switch status
  - Door lock status
- Data which BCM transmits to ECM
  - DRL operation signal (electric load signal)
  - Air condition ON signal (electric load signal)
  - Lighting switch signal (electric load signal)
  - Rear defogger operation signal (electric load signal)

**Alarm Indicator Lamp**

Alarm indicator lamp (2) is installed on the HVAC control module (1) for the theft preventive purpose.
The BCM makes the alarm indicator lamp flash at certain intervals after the ignition switch is turned off until it is turned on again. Also, DTCs stored in BCM can be checked by reading the flashing patterns of the alarm indicator lamp when diagnosing troubles.

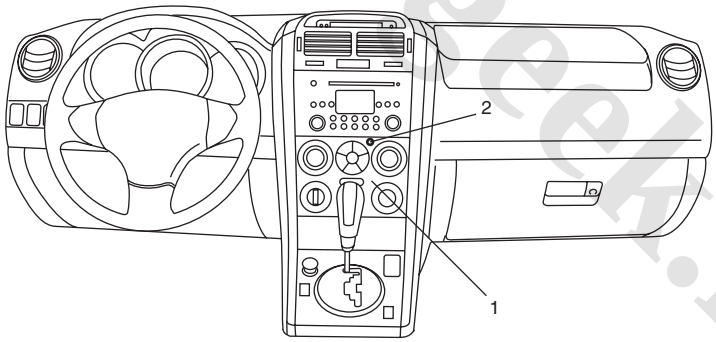


I5JB0AA20001-01

## Schematic and Routing Diagram

### Body Electrical Control System Wiring Circuit Diagram

S5JB0AA202001

www.cargeek.ir

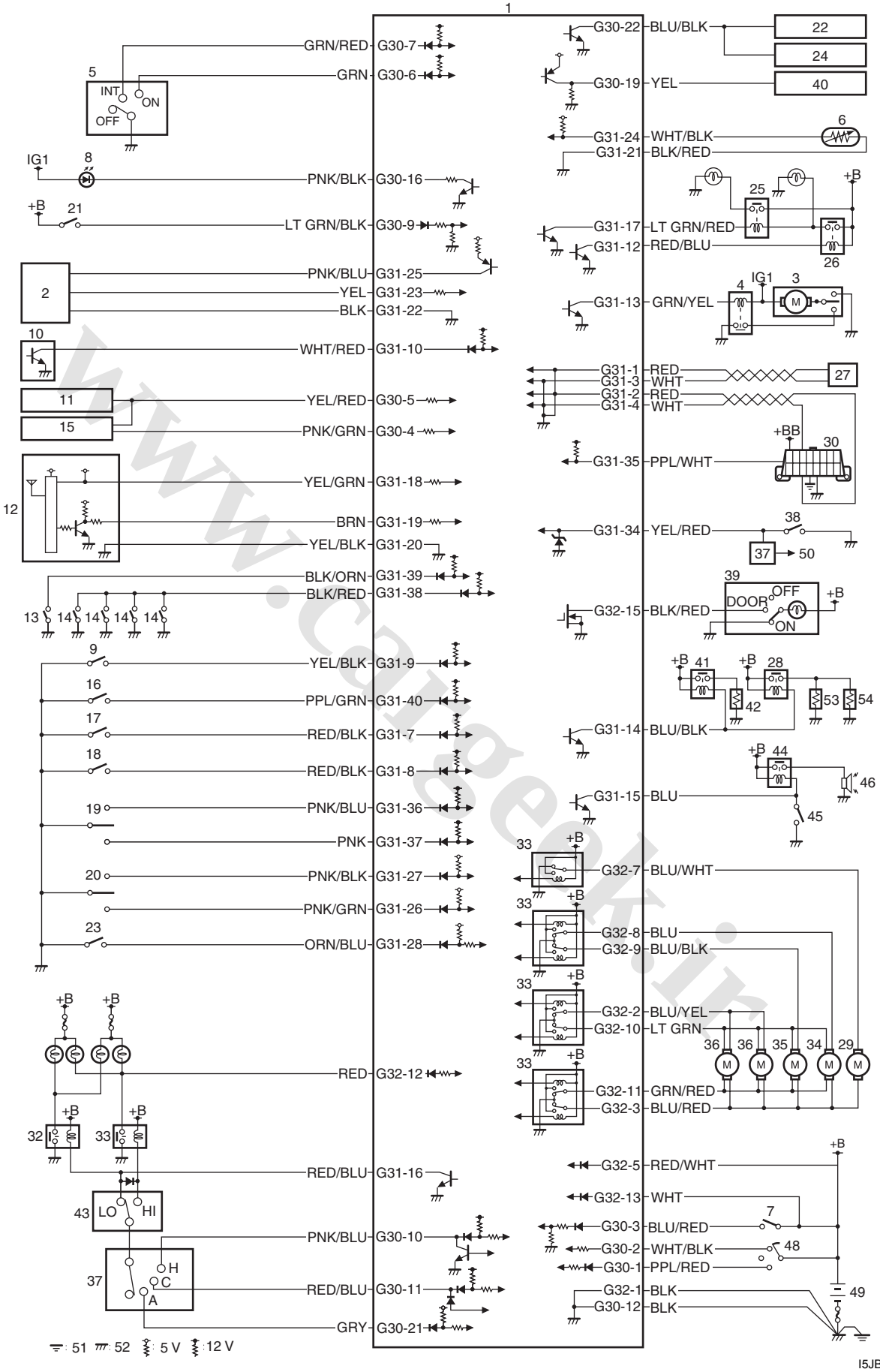


I5JB0AA20023-06

www.cargeek.ir

 www.CarGeek.ir

| | | |
|---|---|---|
| 1. BCM | 22. Navigation | 43. Dimmer and passing switch |
| 2. Auto-ON headlight sensor | 23. POWER/NORMAL mode switch | 44. Horn relay |
| 3. Rear wiper motor | 24. Headlight auto leveling control module | 45. Horn switch |
| 4. Rear wiper relay | 25. Front fog light relay | 46. Horn |
| 5. Rear wiper and washer switch | 26. Tail light relay | 47. Lighting switch |
| 6. Outside air temperature sensor | 27. Junction connector | 48. Ignition switch |
| 7. Ignition key switch | 28. Door mirror heater relay | 49. Battery |
| 8. Alarm indicator light | 29. Rear end door lock actuator | 50. To turn signal light |
| 9. Oil pressure switch | 30. Data link connector (DLC) | 51. Body ground |
| 10. Generator | 31. Headlight high beam relay | 52. Engine ground |
| 11. Information display | 32. Headlight low beam relay | 53. Right side door mirror heater |
| 12. Keyless entry receiver | 33. Door lock motor relay | 54. Left side door mirror heater |
| 13. Driver side door switch | 34. Driver side door lock actuator | INT: Intermittent position |
| 14. Other than driver side door switch | 35. Passenger side door lock actuator | ON: Rear wiper ON position |
| 15. HVAC controller | 36. Rear door lock actuator | LO: Low beam position |
| 16. Driver side seat belt switch | 37. Turn signal and hazard warning relay | HI: High beam position |
| 17. Brake fluid level switch | 38. Hazard warning switch | A: Auto position |
| 18. Parking brake switch | 39. Interior light | C: Clearance position |
| 19. Door key cylinder switch (included in door lock actuator) | 40. Air bag control module | H: Head position |
| 20. Manual door lock switch | 41. Rear window defogger relay | |
| 21. Front fog light switch | 42. Rear window defogger | |

## Connector Layout Diagram of BCM

S5JB0AA202002

### BCM connectors (viewed from harness side)

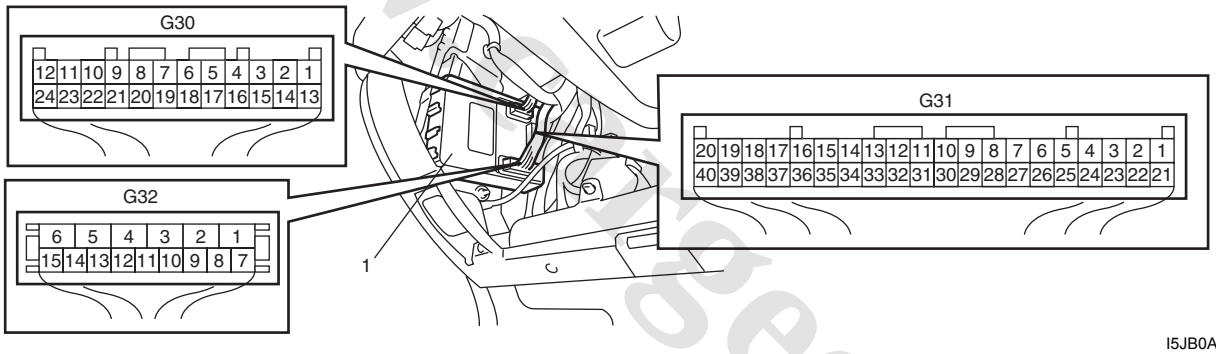


I5JB0AA20002-01

1. BCM

www.cargeek.ir

# Component Location

## BCM and Related System Component Location

S5JB0AA203001

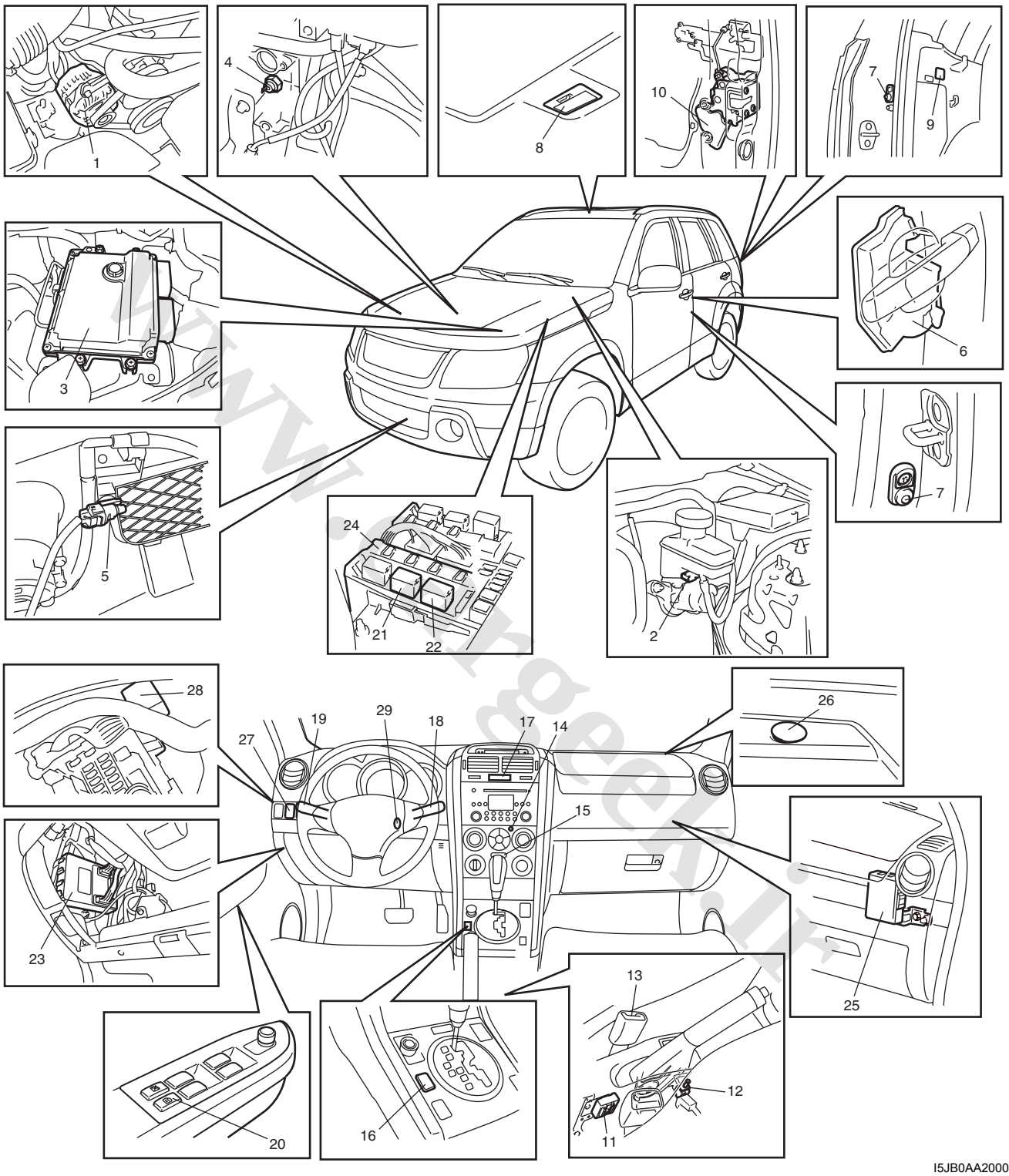


I5JB0AA20003-02

| | | |
|---|---|---|
| 1. Generator | 11. Keyless entry receiver (if equipped) | 21. Headlight high beam relay |
| 2. Brake fluid level switch | 12. Parking brake switch | 22. Headlight low beam relay |
| 3. ECM | 13. Seat belt buckle switch | 23. BCM |
| 4. Oil pressure switch | 14. Alarm indicator lamp | 24. Rear end window defogger, mirror heater, rear wiper and front fog light relays (included in integration relay) |
| 5. Outside air temperature sensor | 15. Rear end door window defogger switch | 25. Keyless start control module (if equipped) |
| 6. Door lock actuator (incorporated in key cylinder switch) | 16. POWER/NORMAL mode select switch | 26. Auto-on headlight sensor (if equipped) |

 www.CarGeek.ir

| | | |
|---|---|---|
| 7. Door switch | 17. Hazard warning switch | 27. Front fog light switch |
| 8. Interior light | 18. Rear wiper switch | 28. Turn signal and hazard warning relay |
| 9. Luggage room light | 19. Lighting switch | 29. Key reminder switch (included in ignition switch) |
| 10. Rear end door lock actuator (incorporated in door switch) | 20. Manual door lock switch | |

# Diagnostic Information and Procedures

## BCM Self-Diagnosis Function

S5JB0AA204001

- BCM monitors conditions of the system components and its circuit with ignition switch turned to ON position. When an abnormality in the system occurs, the area where that abnormality lies is stored in the memory of EEPROM in BCM.
- DTC can be checked in either one of following ways.
  - DTC can be checked by SUZUKI scan tool (2) connected to DLC (1).
  - DTC can be read from flashing pattern of alarm indicator lamp (3). In addition, when alarm indicator is flashing for DTC outputting DTC is displayed on combinations meter (4) at the same time.

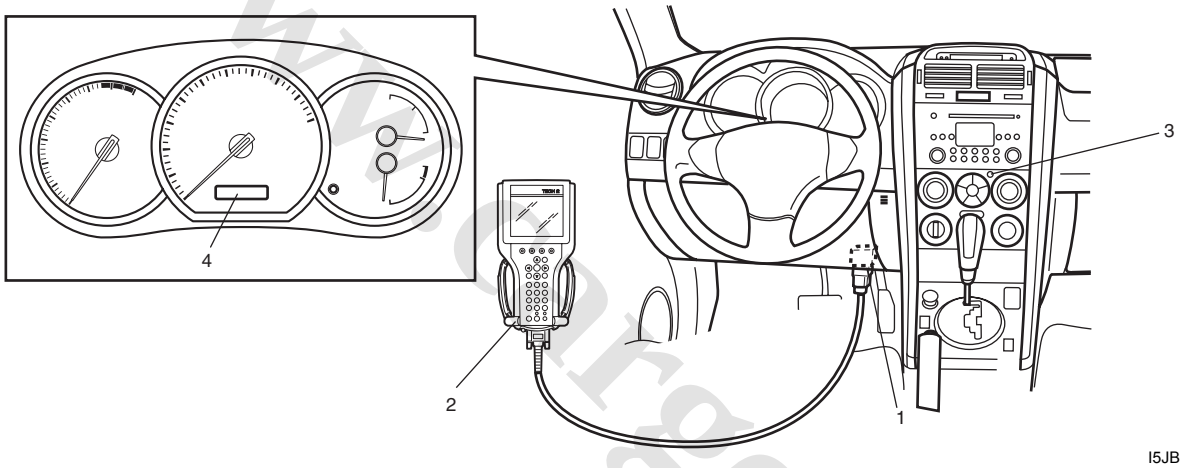


I5JB0AA20004-01

### BCM input / output table

| Control | Input | Output |
|---|---|---|
| Power door lock system | • Key cylinder switch<br>• Manual door lock switch | • Driver side door lock actuator<br>• Other than driver side door lock actuator |
| Keyless entry system | • Key reminder switch<br>• Keyless entry receiver<br>• Driver side door switch | • Driver side door lock actuator<br>• Other than driver side door lock actuator<br>• Turn signal and hazard warning relay<br>• Interior light |
| Keyless start system (Door lock function) | • Keyless start control module | • Driver side door lock actuator<br>• Other than driver side door lock actuator<br>• Turn signal and hazard warning relay<br>• Interior light |
| Rear wiper | • Rear wiper INT switch<br>• Rear wiper LO switch | • Rear wiper relay |

www.cargeek.ir

www.CarGeek.ir


| Control | Input | Output |
|---|---|---|
| Combination meter | • Lighting switch<br>• Brake fluid level switch<br>• Seat belt reminder lamp signal<br>• Generator<br>• Oil presser switch<br>• Parking brake switch<br>• Power/Normal mode select switch (for A/T model only)<br>• Dimmer switch (high beam)<br>• Illumination controller (for auto-on headlight model only)<br>• Door switch<br>• BCM DTC signal | • Combination meter |
| Interior light | • Each door switch<br>• Key reminder switch | • Interior light<br>• Luggage room light |
| Warning buzzer | • Key reminder switch<br>• Tail light switch<br>• Driver side door switch<br>• ECM (vehicle speed signal)<br>• TCM (reverse signal) (if equipped)<br>• 4WD control module (for 4WD model only)<br>• Keyless start control module (if equipped) | • Warning buzzer (located in BCM) |
| DRL system | • Lighting switch<br>• ECM (engine ON, OFF signal)<br>• Generator | • DRL indicator lamp control signal<br>• Headlight low relay |
| Auto-on headlight system | • Lighting switch<br>• Parking brake switch<br>• Auto-on headlight sensor | • Tail light relay<br>• Headlight low relay |
| Front fog light | • Lighting switch<br>• Front fog light switch | • Front fog light relay |
| Rear end door window defogger and door mirror heater | • Rear end door window defogger switch (included in HVAC control module)<br>• Generator<br>• ECM (engine ON, OFF signal) | • Rear end door defogger window relay<br>• Mirror heater relay (if equipped) |
| Illumination control (if equipped) | • Lighting switch<br>• Illumination controller | • Illumination control of combination meter and information display (illumination cancel signal) |
| Door lock canceller | • SDM (air bag deployment signal) | • Driver side door lock actuator<br>• Other than driver side door lock actuator |
| Alarm indicator lamp | • Key reminder switch | • Alarm indicator lamp (located in information HVAC control module) |

www.cargeek.ir

 www.CarGeek.ir

## Body Electrical Control System Check

S5JB0AA204002

| Step | Action | Yes | No |
|---|---|---|---|
| 1 | ☞ **Customer complaint analysis**<br>1) Perform customer complaint analysis.<br>*Was customer complaint analysis performed?* | Go to Step 2. | Perform customer complaint analysis. |
| 2 | ☞ **Problem symptom confirmation**<br>1) Perform problem symptom confirmation.<br>*Does trouble recur?* | Go to Step 3. | Go to Step 7. |
| 3 | ☞ **DTC check**<br>1) Check DTC.<br>*Is it malfunction code?* | Go to Step 4. | Go to Step 5. |
| 4 | ☞ **Troubleshooting for DTC**<br>1) Check and repair according to DTC diag. flow.<br>*Are check and repair completed?* | Go to Step 7. | Check and repair malfunction part(s). |
| 5 | ☞ **Body electrical control system symptom diagnosis**<br>1) Perform check and repair referring to “Symptom Diagnosis” of system having a trouble.<br>*Is there faulty condition?* | Repair or replace malfunction part(s). | Go to Step 6. |
| 6 | ☞ **Check for intermittent problem**<br>1) Check for intermittent problem.<br>*Is there faulty condition?* | Repair or replace malfunction part(s). | Go to Step 7. |
| 7 | ☞ **Final confirmation test**<br>1) Clear DTC referring to “DTC Clearance: ”.<br>2) Check DTC referring to “DTC Check: ”.<br>*Is there any DTC?* | Go to Step 4. | End. |

**Customer Complaint Analysis**

Record details of the problem (failure, complaint) and how it occurred as described by the customer.
For this purpose, use of such a questionnaire form as shown in the figure will facilitate collecting information to the point required for proper analysis and diagnosis.

www.cargeek.ir

**Customer questionnaire (example)**

| | | | |
|---|---|---|---|
| Customer's Name: | Model: | VIN: | |
| Date of Issue: | Date Reg. | Date of Problem: | Mileage: |
| | | | |
| Problem Symptoms | • Power door lock system does not operate<br>• Keyless entry system does not operate<br>• Rearend door window defogger does not operate<br>• Rear wiper does not operate<br>• Rearend door opener does not operate<br>• Warning buzzer does not sound<br>• Interior light does not light<br>• Alarm indicator lamp does not flash | | |
| Frequency of Occurrence | • Continuous / Intermittent (_____ times a day, a month) / other_____ | | |
| Environmental Condition | • Weather: fair / cloudy / rain / snow / other_____<br>• Temperature: _____ ° F (_____ ° C) | | |
| Diagnostic Trouble Code | • Normal code / malfunction code(_____) | | |

I4RS0AA20013-01

**Problem Symptom Confirmation**
Check if what the customer claimed in "Customer Questionnaire" is accurately found in the vehicle. If that symptom is found, check whether the symptom is identified as a failure. (This step should be shared with the customer if possible.)

**DTC check**
Check DTC stored in BCM memory referring to "DTC Check: ", record it and then clear it referring to "DTC Clearance: ". DTC indicates malfunction that occurred in the system but does not indicate whether it exists now or it occurred in the past and the normal condition has been restored now. To check which case applies, clear DTC once and check whether or not any fault exists.

**Troubleshooting for DTC**
Based on the DTC indicated in Step 3 and referring to applicable DTC flow, locate the cause of the trouble, namely in a sensor, wire harness, connector, BCM or other part and repair or replace faulty parts.

**Body Electrical Control System Symptom Diagnosis**
Check the parts or system suspected as a possible cause referring to symptom diagnosis of each system.

**Check for Intermittent Problem**
Check parts where an intermittent trouble is easy to occur (e.g., wire harness, connector, etc.), referring to "Intermittent and Poor Connection Inspection: in Section 00".

**Final Confirmation Test**
Confirm that the problem symptom has gone and the body electrical control system is free from any abnormal conditions. If what has been repaired is related to the malfunction DTC, check DTC again and confirm that no DTC is indicated.

www.cargeek.ir

 www.CarGeek.ir

## Scan Tool Data

S5JB0AA204003

| Scan tool Data | Condition | Normal condition / reference value |
|---|---|---|
| Vehicle Speed | At stop with ignition switch turned ON | 0 km/h |
| Outside air Temp | Reference value is relative to outside air temperature | –40 °C – 70 °C (–40 °F – 158 °F) |
| Battery Voltage | At specified idle speed after warming up | 10 – 14 V |
| Coolant Temp | At specified idle speed after warming up | 80 °C – 100 °C (176 °F – 212 °F) |
| Engine Speed | Engine idling with no load applied after warming up | Desired idle speed ± 50 rpm |
| Fuel Consumption | At specified idle speed after warming up | 0.0 km/l |
| Key Reminder Sw | Ignition key inserted in ignition key cylinder | Key in |
| | Ignition key pulled out from ignition key cylinder | Pulled |
| Door key Sw | Key cylinder switch of driver side door at lock position | LOCK |
| | Key cylinder switch of driver side door not turned | Neutral |
| | Key cylinder switch of driver side door at unlock position | Unlock |
| Door Lock Sw | Lock side of manual door lock switch pressed | LOCK |
| | Manual door lock switch not pressed | Neutral |
| | Unlock side of manual door lock switch pressed | Unlock |
| Driv Door Sw | Driver side door open | Open |
| | Driver side door closed | Close |
| Pass Door Sw | Doors other than driver side door open | Open |
| | Doors other than driver side door closed | Close |
| Brake Fluid Level | Brake fluid level at MIN level or higher | Normal |
| | Brake fluid level lower than MIN level | Low |
| Parking Brake Sw | Parking brake lever pulled | ON |
| | Parking brake lever released | OFF |
| Rear Defogger Sw | Rear end door window defogger switch turned ON with engine running | ON |
| | Rear end door window defogger switch turned OFF with engine running | OFF |
| Tail Light Sw | Lighting switch at HEAD or CLEARANCE position | ON |
| | Lighting switch at OFF position | OFF |
| Driv Seat belt Sw | Driver side seat belt fastened | Fasten |
| | Driver side seat belt unfastened | Unfasten |
| Charge Lamp | Engine at stop with ignition switch turned ON | ON |
| | Engine running | OFF |
| Oil pressure switch | Engine at stop with ignition switch turned ON | ON |
| | Engine running | OFF |
| A/C Switch | A/C and ignition switch turned ON | ON |
| | A/C switch turned OFF | OFF |

**Scan Tool Data Definitions**

**Vehicle Speed (km/h, mph):** This parameter indicates the vehicle speed computed by ECM.

**Outside air Temp (°C, °F):** It is detected by outside air temperature sensor.

**Battery Voltage (V):** This parameter indicates battery positive voltage inputted to BCM.

**Coolant Temp (Engine coolant temperature) (°C, °F):** This parameter indicates the engine coolant temperature computed by ECM.

**Engine Speed (RPM):** This parameter indicates the engine speed computed by ECM.

**Fuel Consumption (km/l):** This parameter indicates the fuel consumption computed by ECM.

**Key Reminder Sw (Key reminder switch) (Pulled / Key in):** This parameter indicates the state of the key reminder switch.

**Door key Sw (Door key cylinder switch) (Lock / Neutral / Unlock):** This parameter indicates the state of the door key cylinder switch.

**Door lock Sw (Manual door lock switch) (Lock / Neutral / Unlock):** This parameter indicates the state of the manual door lock switch.

**Driv Door Sw (Driver side door switch) (Open / Close):** This parameter indicates the state of the driver side door switch.

www.cargeek.ir

**Pass Door Sw (Other than driver side door switch) (Open / Close):** This parameter indicates the state of the door switches other than driver side door switch.
**Brake Fluid Level (Low / Normal):** Low: Brake fluid level is lower than specified level.
Normal: Brake fluid level is higher than MIN level.
**Parking Brake Sw (Parking brake switch) (ON / OFF):** ON: Parking brake lever is pulled up.
OFF: Parking lever is released
**Rear Defogger Sw (Rear end door window defogger switch) (ON / OFF):** This parameter indicates the state of the rear end door window defogger switch.
**Tail Light Sw (Lighting switch) (ON / OFF):** This parameter indicates the state of the lighting switch.
**Driv Seat belt Sw (Driver seat belt switch) (Fasten / Unfasten):** This parameter indicates the state of the driver side seat belt buckle switch.
**Charge lamp (ON / OFF):** This parameter indicates the state of the charge system monitor switch.
**Oil pressure switch (ON / OFF):** This parameter indicates the state of the oil pressure switch.
**A/C Switch (ON / OFF):** This parameter indicates the state of the air conditioning switch.

**Diagnosis Using Output Test Function of SUZUKI Scan Tool**
SUZUKI scan tool has the output test function which can force operation of following actuators and relays of the system controlled by BCM. When a malfunction is found in the system controlled by BCM, execute the output test which enables easy judgment whether the malfunction is on the input side or output side of BCM. For detailed information on operation of SUZUKI scan tool, refer to “SUZUKI Scan Tool Operator’s Manual”.

| Output Test Item | Controlled Parts |
|---|---|
| Hazard Warning Light | Turn signal and hazard warning relay |
| Interior (Dome) Light | Interior (Dome) light (when interior light switch is at DOOR position) |
| Parking/Tail Light | Tail light relay |
| Front Fog Light | Front fog light relay (when lighting switch is at CLEARANCE position) |
| Rear defogger | Rear defogger and mirror heater relays |
| D.R.L. | Headlight low beam relay |
| Auto on headlight | Headlight low beam and tail light relays |
| Door | Each door lock actuator |
| Warning buzzer | Warning buzzer (in BCM) |
| Rear wiper | Rear wiper relay |
| Alarm indicator | Alarm indicator light (in information display or clock) |

## DTC Table

S5JB0AA204004

| DTC (displayed on SUZUKI scan tool) | DTC (indicated by alarm indicator lamp) | DTC (displayed on odometer in combination meter) | Detected item | Detecting condition |
|---|---|---|---|---|
| NO DTC | 0000 | 0000 | — | No DTC detected |
| ☞ B1133 | 1133 | b1133 | Battery voltage too high | Battery voltage too high |
| ☞ B1141 | 1141 | b1141 | Outside air temperature (ambient temperature) sensor circuit open | Sensor output voltage too high |
| ☞ B1142 | 1142 | b1142 | Outside air temperature (ambient temperature) sensor circuit short to ground | Sensor output voltage too low |
| ☞ B1143 | 1143 | b1143 | Outside air temperature (ambient temperature) sensor malfunction | Sensor output voltage out of specification |
| ☞ B1150 | 1150 | b1150 | Air bag communication circuit malfunction | Air bag communication circuit open or short to ground |
| ☞ B1157 | 1157 | b1157 | Air bag deployment signal input | Air bag deployment signal inputted |
| ☞ B1170 | 1170 | b1170 | EEPROM access error | Memory error |
| ☞ U1073 | 1073 | U1073 | Control module communication bus off | Transmitting and receiving error of BCM for specified time continuously |

www.cargeek.ir

 www.CarGeek.ir

| DTC (displayed on SUZUKI scan tool) | DTC (indicated by alarm indicator lamp) | DTC (displayed on odometer in combination meter) | Detected item | Detecting condition |
|---|---|---|---|---|
| ☞ U1100 | 1100 | U1100 | Lost communication with ECM | Receiving error of BCM from ECM for specified time continuously |
| ☞ U1101 | 1101 | U1101 | Lost communication with TCM | Receiving error of BCM from TCM for specified time continuously |
| ☞ U1144 | 1144 | U1144 | Lost communication with key free control unit | Receiving error of BCM from keyless start control module for specified time continuously |

## DTC Check

S5JB0AA204005

### Using SUZUKI Scan Tool

1) Prepare SUZUKI scan tool.
2) With ignition switch turned OFF, connect it to data link connector (DLC) located on underside of instrument panel of driver's side.

   **Special tool**
   **(A): SUZUKI scan tool**

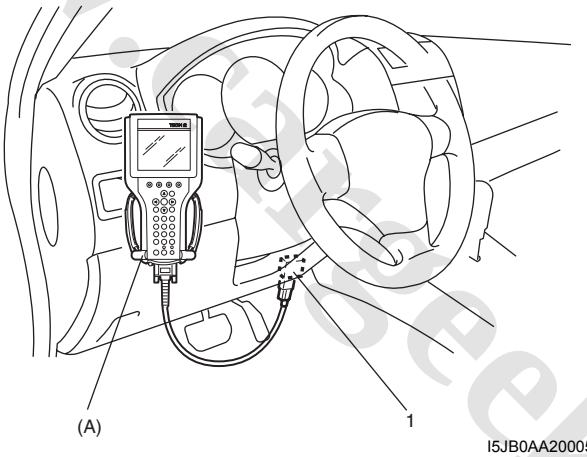


I5JB0AA20005-02

3) Turn ignition switch ON.
4) Read DTC according to instructions displayed on SUZUKI scan tool and print it or write it down.
   Refer to SUZUKI scan tool operator's manual for further details.
   If communication between SUZUKI scan tool and BCM is not possible, check if SUZUKI scan tool is communicable by connecting it to BCM in another vehicle. If communication is possible in this case, SUZUKI scan tool is in good condition. Then check data link connector and serial data line (circuit) in the vehicle with which communication was not possible.
5) After completing the check, turn ignition switch off and disconnect SUZUKI scan tool from data link connector.

### Without Using SUZUKI Scan Tool

1) Turn ignition switch to OFF position.
2) Perform following Steps a) to d) within 10 seconds after ignition switch is turned ON and engine stops.
   a) Turn lighting switch to "CLEARANCE" position.
   b) Turn lighting switch to "OFF" position.
   c) Repeat Steps a) and b) 2 times.
   d) Press and release driver side door switch 3 times.

www.cargeek.ir

3) Check DTC displayed on odometer of combination meter or read flashing pattern of alarm indicator lamp which represents DTC as shown in the following example and write it down.
When more than 2 DTCs are stored in memory, flashing for each DTC starts with the smallest DTC number in increasing order. Also, DTC is indicated repeatedly until the ignition switch is turned OFF.

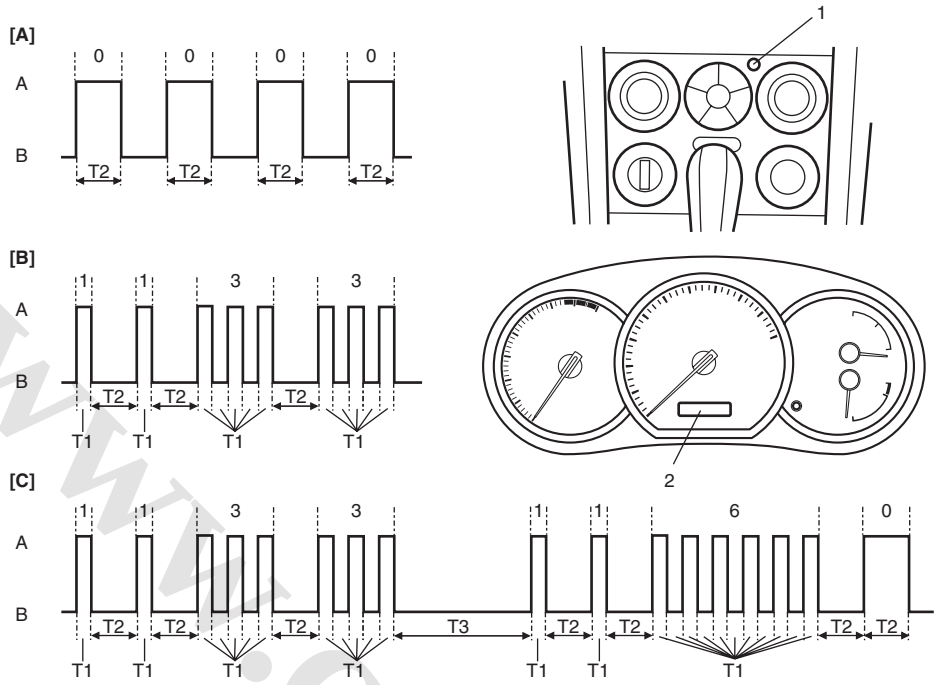


I5JB0AA20011-01

| | | |
|---|---|---|
| [A]: No DTC (No. 0000) | B: Indicator lamp turned OFF | 1. Alarm indicator lamp |
| [B]: DTC B1133 (No. 1133) | T1: 0.3 seconds | 2. Odometer |
| [C]: When 2 DTCs are detected | T2: 1.0 seconds | |
| A: Indicator lamp turned ON | T3: 3.0 seconds | |

4) After completing the check, turn ignition switch to OFF position.

## DTC Clearance

S5JB0AA204006

After repair or replace of malfunction part(s), clear all DTCs by performing the following procedure.

### Using SUZUKI Scan Tool

1) Connect SUZUKI scan tool to data link connector in the same manner as when making this connection for DTC check.
2) Turn ignition switch ON and engine stops.
3) Erase DTC according to instructions displayed on scan tool. Refer to scan tool operator's manual for further details.
4) After completing the clearance, turn ignition switch off and disconnect scan tool from data link connector.

### Without Using SUZUKI Scan Tool

1) Turn ignition switch to OFF position.
2) Perform following Steps a) to d) within 10 seconds after ignition switch is turned ON and engine stops.
   a) Turn lighting switch to "CLEARANCE" position.
   b) Turn lighting switch to "OFF" position.
   c) Repeat Steps a) and b) 3 times.
   d) Press and release driver side door switch 4 times.
3) After completing above Steps, confirm that no malfunction DTC is detected.

www.cargeek.ir

 www.CarGeek.ir

## BCM Power Circuit and Ground Circuit Check

S5JB0AA204007

### Wiring Diagram

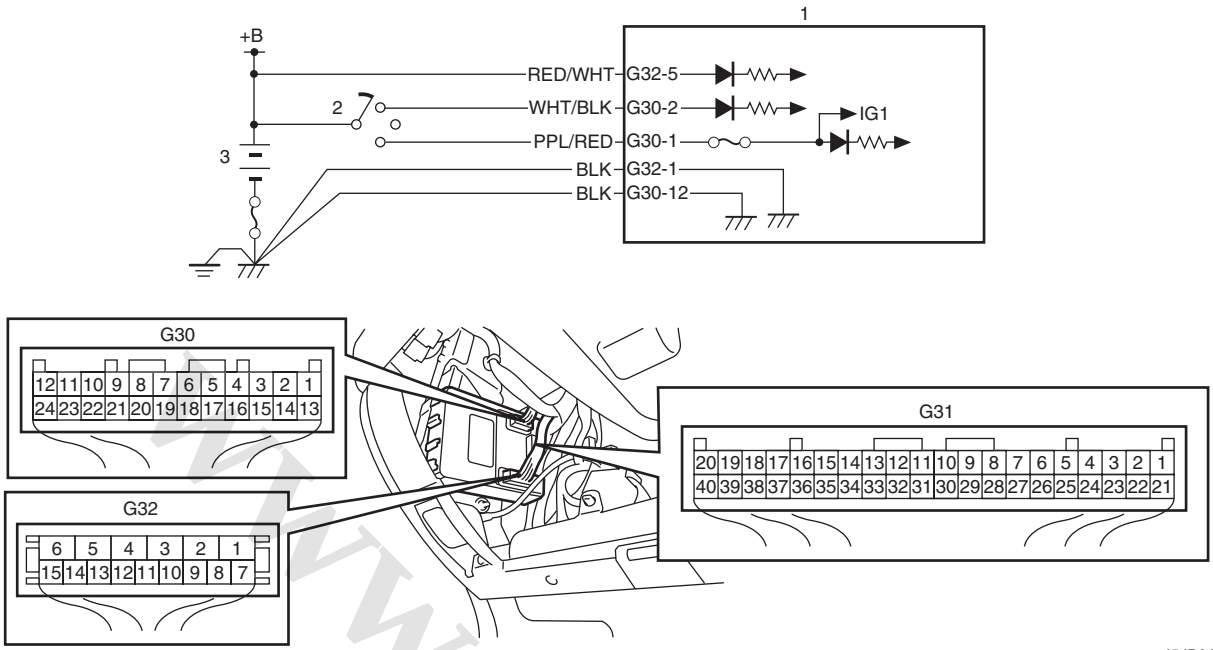


I5JB0AA20006-01

| | |
|---|---|
| 1. BCM | 3. Battery |
| 2. Ignition switch | |

### Troubleshooting

| Step | Action | Yes | No |
|---|---|---|---|
| 1 | **Fuse check**<br>1) Turn ignition switch to OFF position.<br>2) Check circuit fuses for condition.<br>*Are circuit fuses in good condition?* | Go to Step 2. | Replace fuse and check for short circuit to ground. |
| 2 | **Power supply circuit check**<br>1) Disconnect connectors from BCM.<br>2) Check for proper connection to BCM connector at terminal “G32-5”.<br>3) If OK, then measure voltage between “G32-5” terminal of BCM and vehicle body ground.<br>*Is voltage 10 – 14 V?* | Go to Step 3. | Repair power supply circuit. |
| 3 | **Power supply circuit check**<br>1) Check for proper connection to BCM connector at terminals “G30-1” and “G30-2”.<br>2) If OK, turn ignition switch ON.<br>3) Measure voltage between following terminals.<br>• Between “G30-1” terminal of BCM connector and vehicle body ground<br>• Between “G30-2” terminal of BCM connector and vehicle body ground<br>*Is each voltage 10 – 14 V?* | Go to Step 4. | Repair power supply circuit. |

www.cargeek.ir

www.CarGeek.ir


| Step | Action | Yes | No |
|---|---|---|---|
| 4 | **Ground circuit check**<br>1) Turn ignition switch to OFF position.<br>2) Check for proper connection to BCM connector at terminals “G30-12” and “G32-1”.<br>3) If OK, then measure resistance between following terminals.<br>• Between “G30-12” terminal of BCM connector and vehicle body ground<br>• Between “G32-1” terminal of BCM connector and vehicle body ground<br>*Is each resistance 2 Ω or less?* | BCM power supply circuit and ground circuit are in good condition. | Repair ground circuit. |

## DTC B1133 (DTC No. 1133): Battery Voltage Too High

S5JB0AA204008

### Wiring Diagram

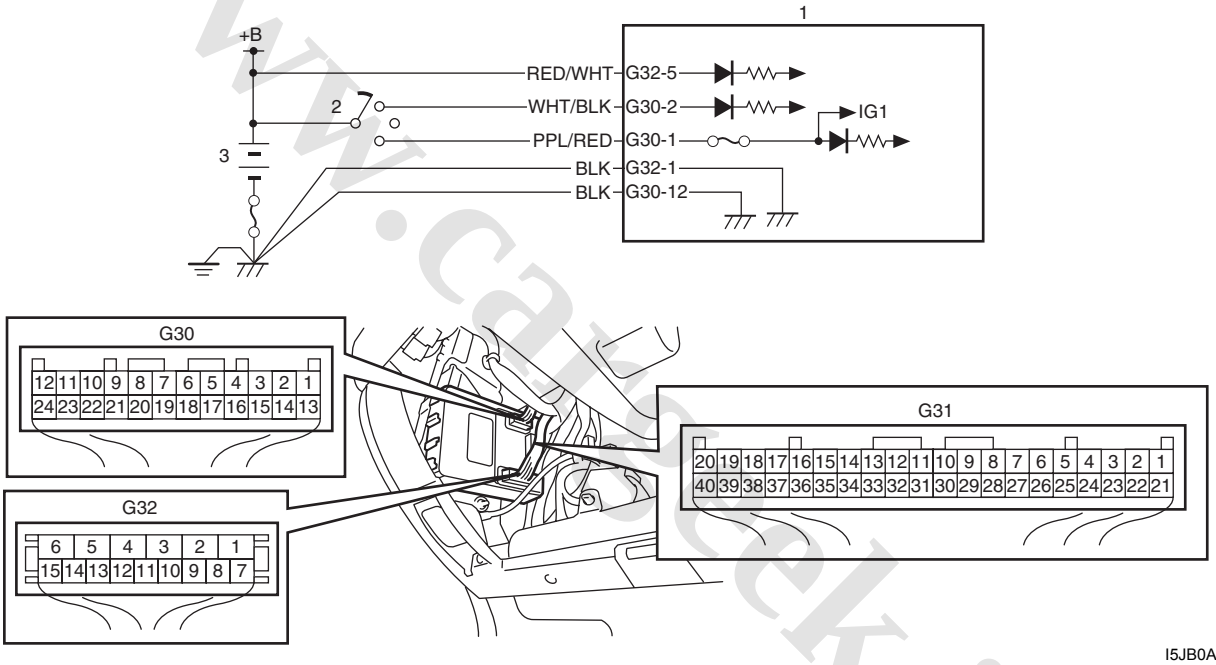


I5JB0AA20006-01

| | |
|---|---|
| 1. BCM | 3. Battery |
| 2. Ignition switch | |

### DTC Detecting Condition and Possible cause

| DTC detecting condition | Possible cause |
|---|---|
| Power voltage supplied from battery to BCM is higher than 16V. | • Charging system malfunction<br>• BCM malfunction |

### Flow Test Description

**Step 1:** Check charging system

### DTC troubleshooting

| Step | Action | Yes | No |
|---|---|---|---|
| 1 | **Charging system operation check**<br>1) Check generator for operation referring to “Generator Test (Overcharged Battery Check): in Section 1J”.<br>*Is it in good condition?* | Substitute a known-good BCM and recheck. | Repair charging system. |

www.cargeek.ir

 www.CarGeek.ir

## DTC B1141 / DTC B1142 / DTC B1143 (No. 1141 / No. 1142/ No. 1143) Outside Air Temperature (Ambient Temp.) Sensor Circuit Malfunction

S5JB0AA204009

### Wiring Diagram

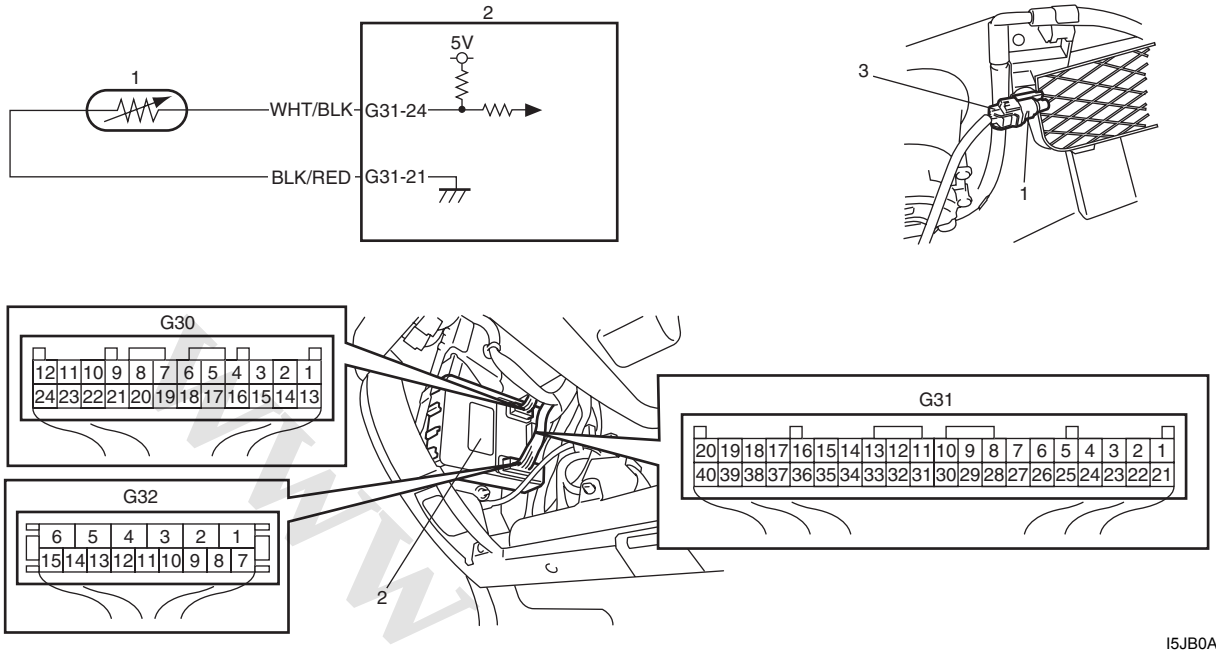


I5JB0AA20007-01

| | |
|---|---|
| 1. Outside air temperature sensor | 3. Outside air temperature sensor connector |
| 2. BCM | |

### DTC Detecting Condition and Possible Cause

| DTC detecting condition | Possible cause |
|---|---|
| **DTC B1141 (DTC No. 1141):**<br>Input signal from outside air temperature sensor is higher than 4.88 V. | • Open in outside air temperature sensor circuit<br>• Outside air temperature sensor malfunction<br>• BCM malfunction |
| **DTC B1142 (DTC No. 1142):**<br>Input signal from outside air temperature sensor is lower than 0.1 V. | • Short in outside air temperature sensor circuit<br>• Outside air temperature sensor malfunction<br>• BCM malfunction |
| **DTC B1143 (DTC No. 1143):**<br>Input signal from outside air temperature sensor is 0.1 - 0.27 V or 4.6 - 4.88 V. | • High resistance in outside air temperature sensor circuit<br>• Outside air temperature sensor malfunction<br>• BCM malfunction |

### Flow Test Description

**Step 1:** Check whether malfunction is in outside air temperature sensor.
**Step 2:** Check outside air temperature sensor input circuit.
**Step 3:** Check outside air temperature sensor ground circuit (for DTC B1141 and B1143).

www.cargeek.ir

### DTC troubleshooting

| Step | Action | Yes | No |
|---|---|---|---|
| 1 | **Check outside air temperature sensor**<br>1) Turn ignition switch to OFF position.<br>2) Disconnect connector from outside air temperature sensor.<br>3) Check outside air temperature sensor for resistance referring to “Outside Air Temperature Sensor Inspection (If Equipped): in Section 9C”.<br>*Is it in good condition?* | Go to Step 2. | Replace outside air temperature sensor. |
| 2 | **Check outside air temperature sensor circuit**<br>1) Turn ignition switch to ON position.<br>2) Measure voltage between “WHT/BLK” terminal of outside air temperature sensor connector and vehicle body ground.<br>*Is voltage 4 – 6 V?* | Go to Step 3. | Open or short in “WHT/BLK” circuit. If OK, substitute a known-good BCM and recheck. |
| 3 | **Check outside air temperature sensor circuit**<br>1) Turn ignition switch to OFF position.<br>2) Check for proper connection to “G31-21” terminal of BCM connector.<br>3) If OK, measure resistance between “BLK/RED” terminal of outside air temperature sensor connector and vehicle body ground.<br>*Is resistance 1 Ω or less?* | Substitute a known-good BCM and recheck. | Open or high resistance in “BLK/RED” circuit. |

## DTC B1150 (No. 1150): Air Bag Communication Circuit Malfunction

S5JB0AA204010

### Wiring Diagram

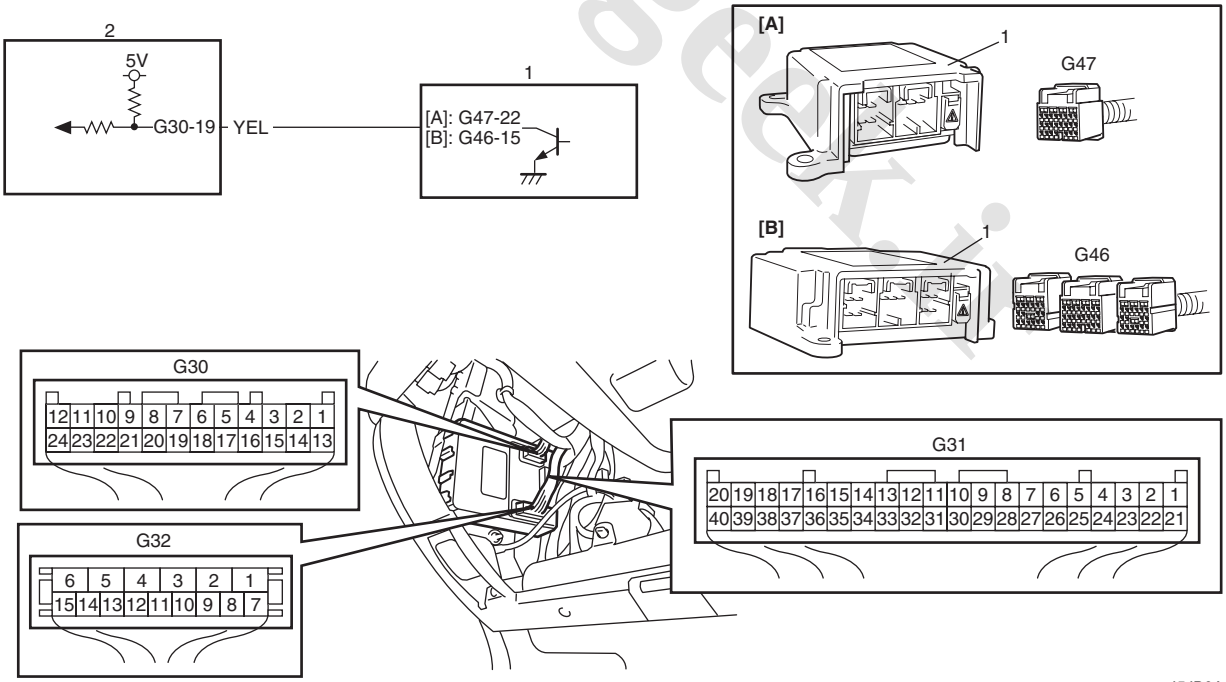


I5JB0AA20008-01

| | |
|---|---|
| [A]: Vehicle not equipped with side-air bag | 1. SDM |
| [B]: Vehicle equipped with side-air bag | 2. BCM |

www.cargeek.ir

 www.CarGeek.ir

**DTC Detecting Condition and Possible Cause**

| DTC detecting condition | Possible cause |
|---|---|
| After ignition switch is turned on, abnormal signal is fed from SDM to BCM. | • Air bag communication circuit open or short<br>• SDM malfunction<br>• BCM malfunction |

**Flow Test Description**

**Step 1:** Check air bag communication circuit.
**Step 2:** Check air bag communication circuit.
**Step 3:** Check air bag communication circuit.

**DTC Troubleshooting**

| Step | Action | Yes | No |
|---|---|---|---|
| 1 | **Check air bag communication circuit**<br>1) Turn ignition switch to OFF position.<br>2) Disconnect connector from SDM referring to “SDM Removal and Installation: in Section 8B”.<br>3) Disconnect connector from BCM.<br>4) Turn ignition switch to ON position.<br>5) Measure voltage between “G47-22” or “G46-15” terminal of SDM connector and vehicle body ground.<br>*Is voltage 0 V?* | Go to Step 2. | Short to power supply in air bag communication circuit. |
| 2 | **Check air bag communication circuit**<br>1) Turn ignition switch to OFF position.<br>2) Connect connectors to BCM.<br>3) Turn ignition switch to ON position.<br>4) Measure voltage between “G30-19” terminal of BCM connector and vehicle body ground.<br>*Is voltage 4 – 6 V?* | Go to Step 3. | Short to ground in air bag communication circuit. If OK, substitute a known-good BCM and recheck. |
| 3 | **Check air bag communication circuit**<br>1) Measure voltage between “G47-22” or “G46-15” terminal of SDM connector and vehicle body ground.<br>*Is voltage 4 – 6 V?* | Substitute a known-good SDM and recheck. | Open or high resistance in air bag communication circuit. |

www.cargeek.ir

www.cargeek.ir

## DTC B1157 (No. 1157) Air Bag Deployment Signal Input

S5JB0AA204011

### Wiring Diagram

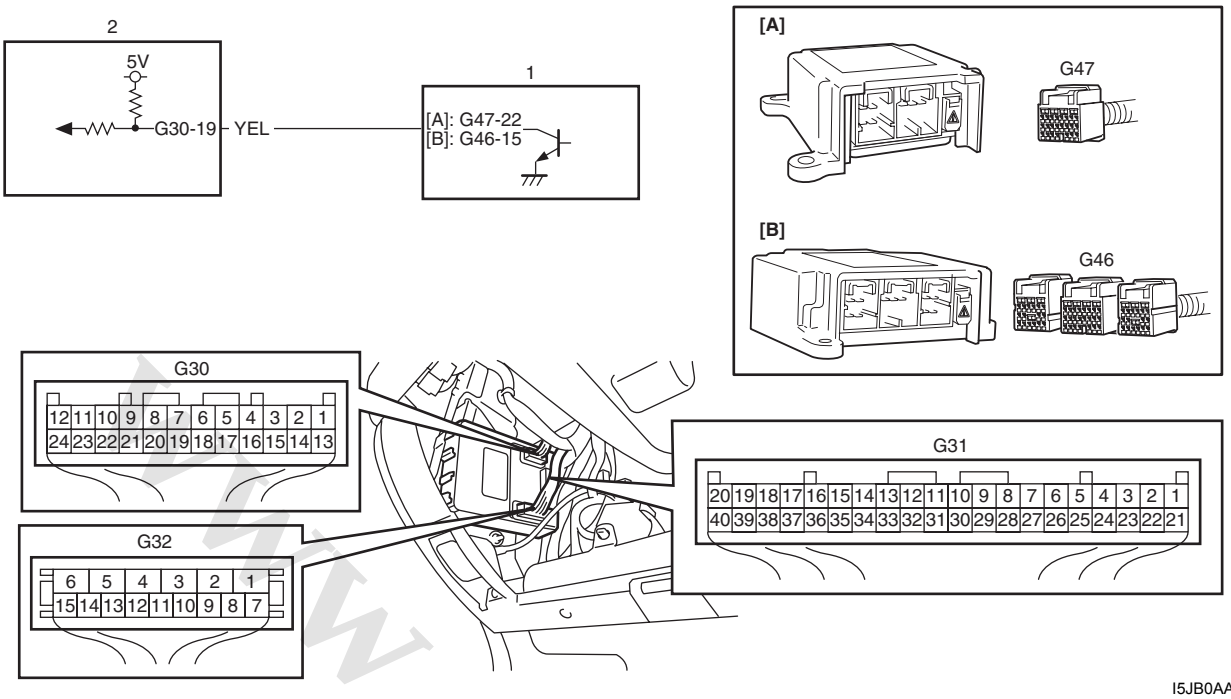


I5JB0AA20009-02

| | |
|---|---|
| [A]: Vehicle not equipped with side-air bag | 1. SDM |
| [B]: Vehicle equipped with side-air bag | 2. BCM |

### DTC Detecting Condition and Possible cause

| DTC detecting condition | Possible cause |
|---|---|
| Air bag deployment signal is fed from SDM to BCM. | • Air bag component parts<br>• BCM malfunction |

### Flow Test Description

**Step 1:** Check DTC for SDM.

### DTC troubleshooting

| Step | Action | Yes | No |
|---|---|---|---|
| 1 | **Check DTC for SDM**<br>1) Check DTC stored in SDM referring to “DTC Check: in Section 8B”.<br>*Is DTC B1021 detected?* | Go to “DTC B1021: Air Bag Module Deployed: in Section 8B”. | Substitute a known-good BCM and recheck. |

## DTC B1170 (No. 1170): EEPROM access error

S5JB0AA204012

### DTC Detecting Condition and Possible Cause

| DTC detecting condition | Possible cause |
|---|---|
| Data write error or check sum error. | BCM malfunction |

### DTC Troubleshooting

**NOTE**

**Before performing steps below, be sure to perform “Body Electrical Control System Check: ”.**

1) Ignition switch OFF.
2) Replace BCM.
3) Repeat BCM Check Flow Table.

www.cargeek.ir

 www.CarGeek.ir

## DTC U1073 (No. 1073): Control Module Communication Bus Off

S5JB0AA204014

### Wiring Diagram

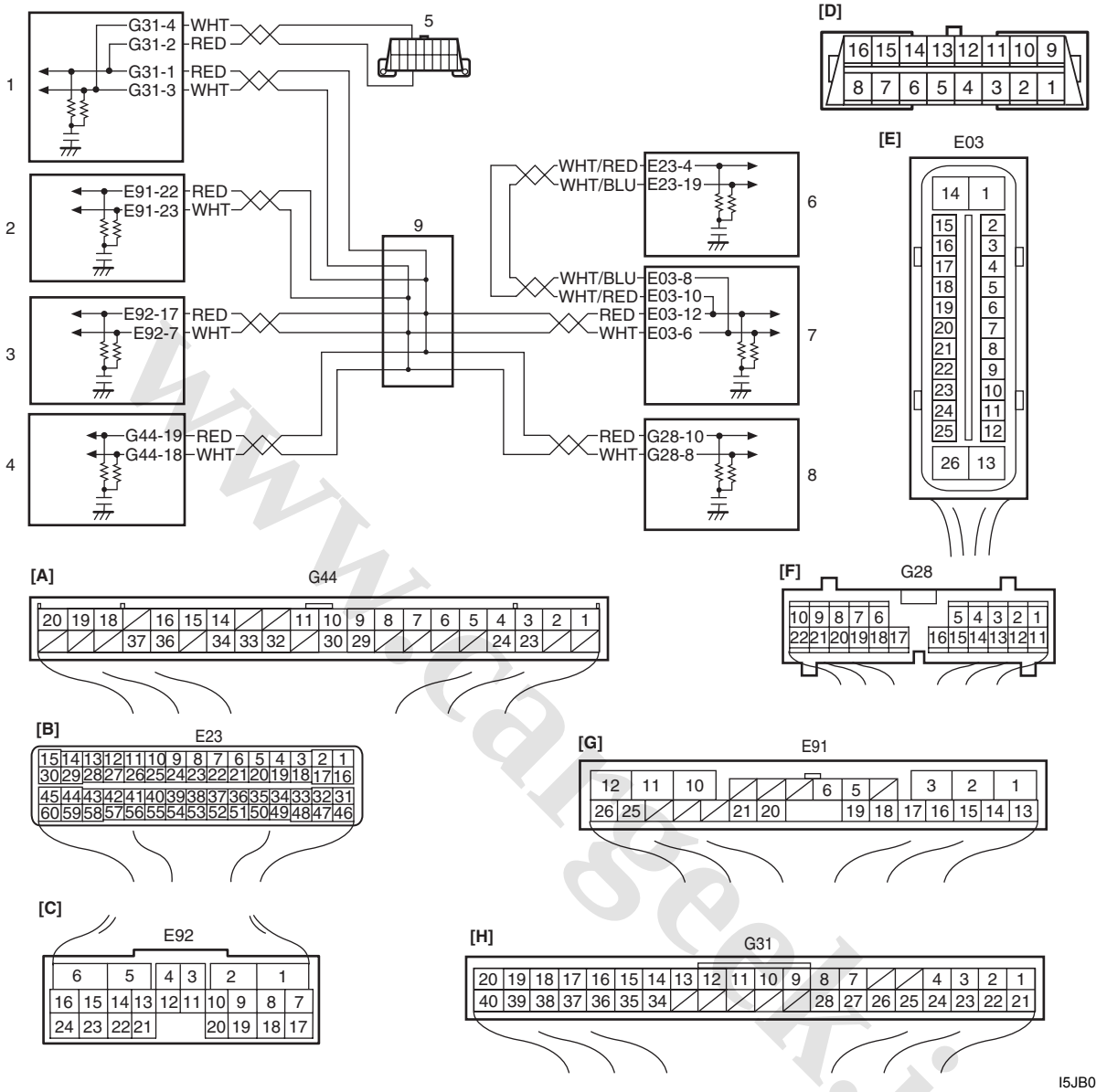


I5JB0AA50017-03

| | |
|---|---|
| [A]: Keyless start control module connector (viewed from harness side) | 1. Keyless start control module |
| [B]: ECM connector (viewed from harness side) | 2. TCM (A/T model) |
| [C]: TCM connector (viewed from harness side) | 3. 4WD control module (if equipped) |
| [D]: DLC (viewed from harness side) | 4. BCM |
| [E]: ABS hydraulic unit/control module connector (viewed from harness side) | 5. DLC |
| [F]: Combination meter connector (viewed from harness side) | 6. ECM |
| [G]: 4WD control module connector (viewed from harness side) | 7. ABS hydraulic unit/control module |
| [H]: BCM connector (viewed from harness side) | 8. Combination meter |
| | 9. Junction connector |

www.cargeek.ir

**DTC Detecting Condition and Trouble Area**

| DTC detecting condition | Trouble area |
|---|---|
| Transmission error that is inconsistent between transmission data and transmission monitor (CAN bus monitor) data is detected more than 7 times continuously.<br>(1 driving detection logic) | • CAN circuit<br>• Combination meter<br>• BCM<br>• 4WD control module (if equipped)<br>• ABS hydraulic unit/control module<br>• TCM (A/T model)<br>• Keyless start control module (if equipped)<br>• ECM |

**DTC Confirmation Procedure**

1) Connect scan tool to DLC with ignition switch turned OFF.
2) Turn ON ignition switch and clear DTC by using scan tool.
3) Start engine and run it for 1 min. or more.
4) Check DTC and pending DTC.

**Troubleshooting**

| Step | Action | Yes | No |
|---|---|---|---|
| 1 | **Check each control unit connectors**<br>1) Check connection of connectors of all control modules communicating by means of CAN and reconnect securely.<br>2) Recheck DTC and reconnect securely.<br>*Is DTC U1073 detected?* | Go to Step 2. | Intermittent trouble. Check for intermittent referring to “Intermittent and Poor Connection Inspection: in Section 00”. |
| 2 | **CAN communication circuit check**<br>1) Turn ignition switch to OFF position.<br>2) Disconnect connectors of all control modules communicating by means of CAN.<br>3) Check CAN communication circuit between control modules for open, short and high resistance.<br>*Is each CAN communication circuit in good condition?* | Go to Step 3. | Repair circuit. |

www.cargeek.ir

 www.CarGeek.ir

| Step | Action | Yes | No |
|---|---|---|---|
| 3 | **Check DTC in BCM**<br>1) Turn ignition switch to OFF position.<br>2) Connect connectors of disconnected control modules communicating by means of CAN.<br>3) Disconnect connector from any one of control modules other than BCM.<br>4) Recheck DTC for BCM.<br>*Is DTC U1073 detected?* | Disconnect connectors of control modules other than the one whose connector is disconnected in Step 3) one by one and check that DTC U1073 is detected by BCM each time connector is disconnected. When DTC U1073 is not detected by BCM while checking in this way, go to description under “NO” below. If DTC U1073 is detected by BCM even when connectors of all control modules that use CAN communication with BCM are disconnected, substitute a known-good BCM and recheck. | Check power and ground circuit of control module disconnect in Step 3). If circuit is OK, substitute a known-good control module disconnected in Step 3) and recheck. |

www.cargeek.ir

www.cargeek.ir

## DTC U1100 (No. 1100): Lost Communication with ECM

S5JB0AA204015

### Wiring Diagram

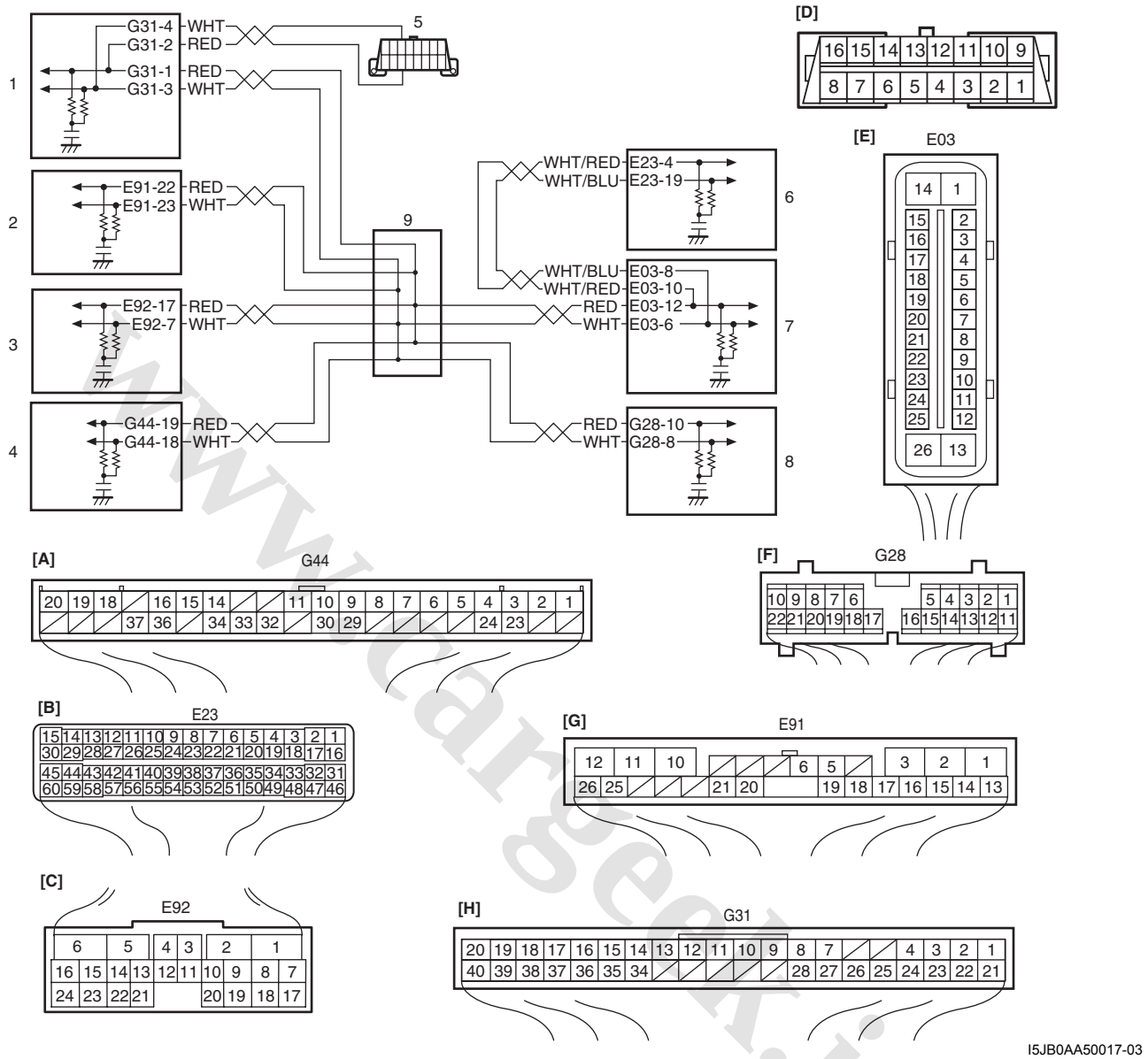


I5JB0AA50017-03

| | |
|---|---|
| [A]: Keyless start control module connector (viewed from harness side) | 1. Keyless start control module |
| [B]: ECM connector (viewed from harness side) | 2. TCM (A/T model) |
| [C]: TCM connector (viewed from harness side) | 3. 4WD control module (if equipped) |
| [D]: DLC (viewed from harness side) | 4. BCM |
| [E]: ABS hydraulic unit/control module connector (viewed from harness side) | 5. DLC |
| [F]: Combination meter connector (viewed from harness side) | 6. ECM |
| [G]: 4WD control module connector (viewed from harness side) | 7. ABS hydraulic unit/control module |
| [H]: BCM connector (viewed from harness side) | 8. Combination meter |
| | 9. Junction connector |

www.cargeek.ir

 www.CarGeek.ir

**DTC Detecting Condition and Trouble Area**

| DTC detecting condition | Trouble area |
|---|---|
| BCM can not receive CAN data from ECM for longer than specified time continuously. | • CAN communication circuit<br>• BCM<br>• ECM |

**DTC Confirmation Procedure**

1) Connect scan tool to DLC with ignition switch turned OFF.
2) Turn ON ignition switch and clear DTC by using scan tool.
3) Start engine and run it for 1 min. or more.
4) Check DTC.

**Troubleshooting**

| Step | Action | Yes | No |
|---|---|---|---|
| 1 | **Check DTC in BCM**<br>*Is DTC U1100 (No. 1100) and DTC U1073 (No. 1073) detected together?* | Go to “DTC U1073 (No. 1073): Control Module Communication Bus Off: ”. | Go to Step 2. |
| 2 | **Check each control module connectors**<br>1) Check connection of connectors of all control modules communicating by means of CAN.<br>2) Recheck BCM for DTC.<br>*Is DTC U1100 (No. 1100) detected?* | Go to Step 3. | Intermittent trouble. Check for intermittent referring to “Intermittent and Poor Connection Inspection: in Section 00”. |
| 3 | **CAN communication circuit check**<br>1) Turn ignition switch to OFF position.<br>2) Disconnect connectors of BCM, ECM and ABS hydraulic unit/control modules communicating by means of CAN.<br>3) Check CAN communication circuit between control modules for open, short and high resistance.<br>*Is each CAN communication circuit in good condition?* | Go to Step 5. | Repair circuit. |
| 4 | **DTC Check**<br>1) Turn ignition switch to OFF position.<br>2) Connect connectors to BCM, ECM and ABS hydraulic unit/control module.<br>3) Check DTC for ABS hydraulic unit/control module.<br>*Is DTC U1100 detected by ABS hydraulic unit/control module?* | Check ECM power and ground circuit. If circuit is OK, substitute a known-good ECM and recheck. | Substitute a known-good BCM and recheck. |

www.cargeek.ir

## DTC U1101 (No. 1101): Lost communication with TCM

S5JB0AA204016

### Wiring Diagram

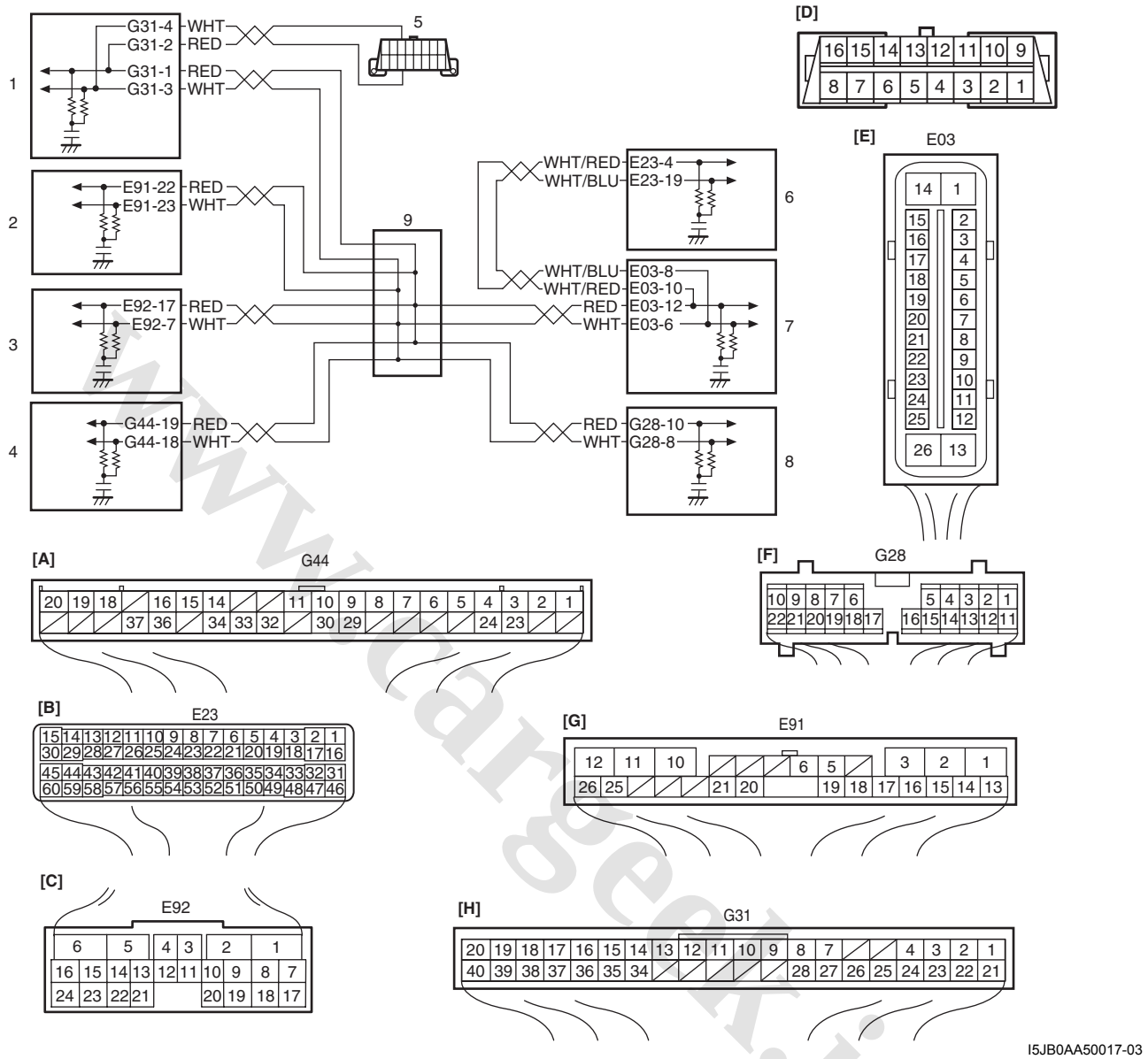


I5JB0AA50017-03

| | |
|---|---|
| [A]: Keyless start control module connector (viewed from harness side) | 1. Keyless start control module |
| [B]: ECM connector (viewed from harness side) | 2. TCM (A/T model) |
| [C]: TCM connector (viewed from harness side) | 3. 4WD control module (if equipped) |
| [D]: DLC (viewed from harness side) | 4. BCM |
| [E]: ABS hydraulic unit/control module connector (viewed from harness side) | 5. DLC |
| [F]: Combination meter connector (viewed from harness side) | 6. ECM |
| [G]: 4WD control module connector (viewed from harness side) | 7. ABS hydraulic unit/control module |
| [H]: BCM connector (viewed from harness side) | 8. Combination meter |
| | 9. Junction connector |

www.cargeek.ir

 www.CarGeek.ir

**DTC Detecting Condition and Trouble Area**

| DTC detecting condition | Trouble area |
|---|---|
| BCM can not receive CAN data from TCM (A/T model) for longer than specified time continuously. | • CAN communication circuit<br>• BCM<br>• TCM (A/T model) |

**DTC Confirmation Procedure**

1) Connect scan tool to DLC with ignition switch turned OFF.
2) Turn ON ignition switch and clear DTC by using scan tool.
3) Start engine and run it for 1 min. or more.
4) Check DTC.

**Troubleshooting**

| Step | Action | Yes | No |
|---|---|---|---|
| 1 | **Check DTC in BCM**<br>*Is DTC U1101 (No. 1101) and DTC U1073 (No. 1073) detected together?* | Go to “DTC U1073 (No. 1073): Control Module Communication Bus Off: ”. | Go to Step 2. |
| 2 | **Check each control module connectors**<br>1) Check connection of connectors of all control modules communicating by means of CAN.<br>2) Recheck BCM for DTC.<br>*Is DTC U1101 (No. 1101) detected?* | Go to Step 3. | Intermittent trouble. Check for intermittent referring to “Intermittent and Poor Connection Inspection: in Section 00”. |
| 3 | **CAN communication circuit check**<br>1) Turn ignition switch to OFF position.<br>2) Disconnect connectors of BCM and TCM communicating by means of CAN.<br>3) Check CAN communication circuit between control modules for open, short and high resistance.<br>*Is each CAN communication circuit in good condition?* | Go to Step 4. | Repair circuit. |
| 4 | **DTC Check**<br>1) Turn ignition switch to OFF position.<br>2) Connect connectors to BCM and TCM.<br>3) Check DTC for ECM.<br>*Is DTC P1678 detected by ECM?* | Substitute a known-good BCM and recheck. | Check TCM power and ground circuit. If circuit is OK, substitute a known-good TCM and recheck. |

www.cargeek.ir

www.cargeek.ir

## DTC U1144 (No. 1144): Lost Communication with Keyless Start Control Module

S5JB0AA204018

### Wiring Diagram

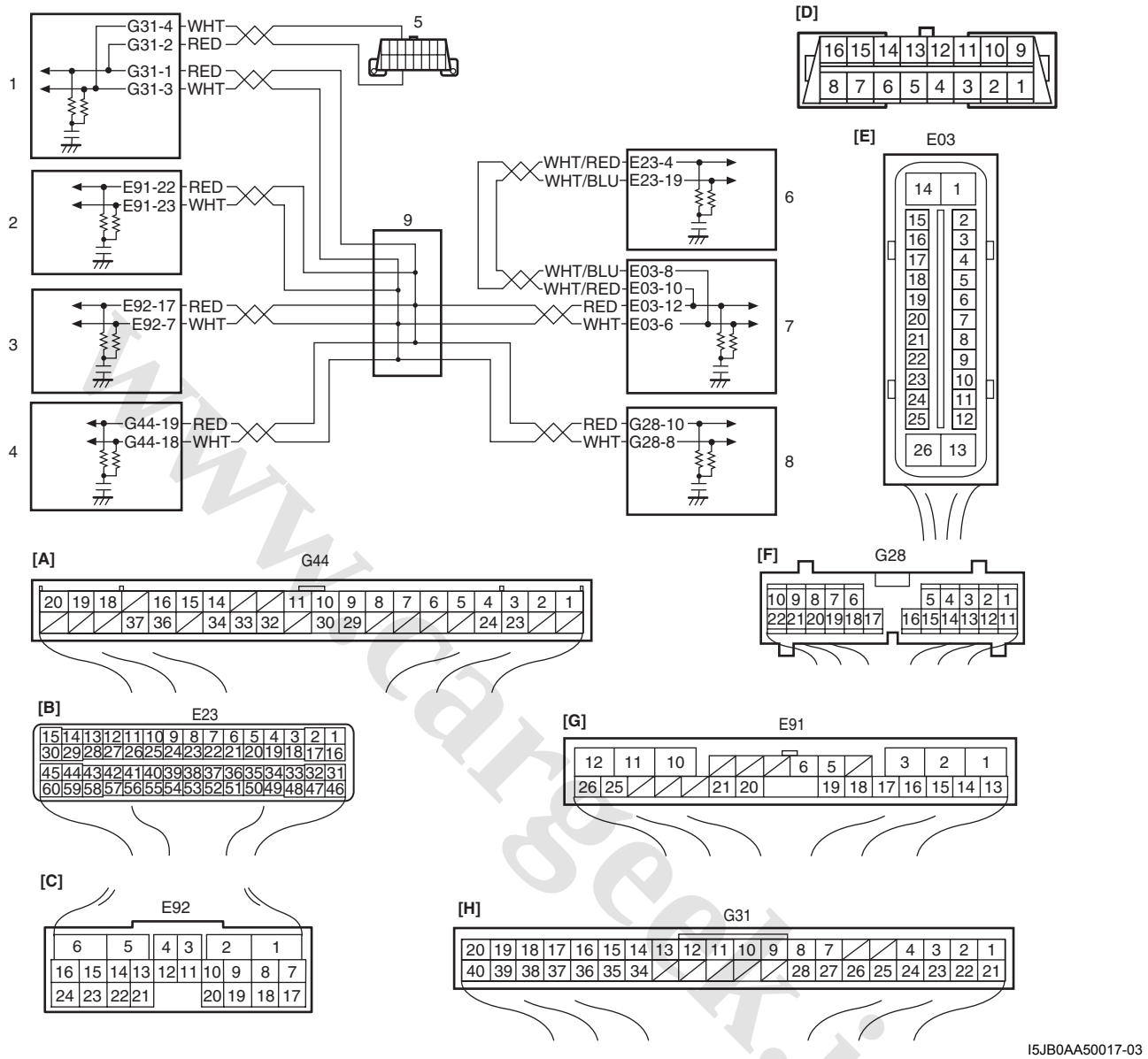


I5JB0AA50017-03

| | |
|---|---|
| [A]: Keyless start control module connector (viewed from harness side) | 1. Keyless start control module |
| [B]: ECM connector (viewed from harness side) | 2. TCM (A/T model) |
| [C]: TCM connector (viewed from harness side) | 3. 4WD control module (if equipped) |
| [D]: DLC (viewed from harness side) | 4. BCM |
| [E]: ABS hydraulic unit/control module connector (viewed from harness side) | 5. DLC |
| [F]: Combination meter connector (viewed from harness side) | 6. ECM |
| [G]: 4WD control module connector (viewed from harness side) | 7. ABS hydraulic unit/control module |
| [H]: BCM connector (viewed from harness side) | 8. Combination meter |
| | 9. Junction connector |

www.cargeek.ir

 www.CarGeek.ir

**DTC Detecting Condition and Trouble Area**

| DTC detecting condition | Trouble area |
|---|---|
| BCM can not receive data sent by CAN from keyless start control module for longer than specified time continuously. | • CAN communication circuit<br>• Keyless start control module<br>• BCM |

**DTC Confirmation Procedure**

1) Clear DTC referring to “DTC Clearance: ”.
2) Start engine and run it for 1 min. or more.
3) Check DTC referring to “DTC Check: ”.

**Troubleshooting**

| Step | Action | Yes | No |
|---|---|---|---|
| 1 | **Check DTC in BCM**<br>*Is DTC U1144 (No. 1144) and DTC U1073 (No. 1073) detected together?* | Go to “DTC U1073 (No. 1073): Control Module Communication Bus Off: ”. | Go to Step 2. |
| 2 | **Check each control module connectors**<br>1) Check connection of connectors of all control modules communicating by means of CAN.<br>2) Recheck BCM for DTC.<br>*Is DTC U1144 (No. 1144) detected?* | Go to Step 3. | Intermittent trouble. Check for intermittent referring to “Intermittent and Poor Connection Inspection: in Section 00”. |
| 3 | **CAN communication circuit check**<br>1) Turn ignition switch to OFF position.<br>2) Disconnect connectors of BCM and keyless start control module communicating by means of CAN.<br>3) Check CAN communication circuit between control modules for open, short and high resistance.<br>*Is each CAN communication circuit in good condition?* | Go to Step 4. | Repair circuit. |
| 4 | **DTC Check**<br>1) Turn ignition switch to OFF position.<br>2) Connect connectors to BCM and keyless start control module.<br>3) Check DTC for ECM.<br>*Is DTC P1618 detected by ECM?* | Substitute a known-good BCM and recheck. | Check keyless start control module power and ground circuit. If circuit is OK, substitute a known-good keyless start control module and recheck. |

www.cargeek.ir

www.cargeek.ir

www.CarGeek.ir


## Inspection of BCM and its Circuits

S5JB0AA204017

BCM and its circuits can be checked at BCM wiring couplers by measuring voltage and resistance.

**⚠ CAUTION**

**BCM cannot be checked by itself. It is strictly prohibited to connect voltmeter or ohmmeter to BCM with couplers disconnected from it.**

### Voltage Check

1) Disconnect negative cable (–) at battery.
2) Remove steering column hole cover from instrument panel.
3) Check voltage at each terminal number of couplers connected.
   For connector and terminal number, refer to “Connector Layout Diagram of BCM: ”.

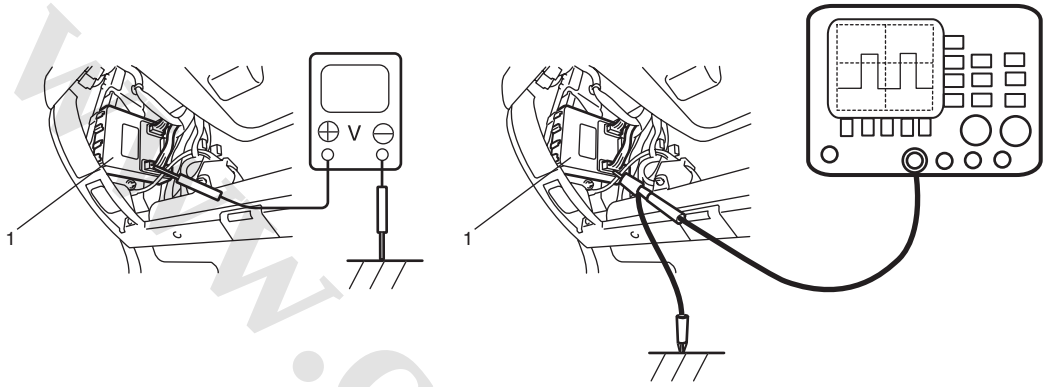


I5JB0AA20012-01

1. BCM

**NOTE**

- **As each terminal voltage is affected by the battery voltage, confirm that it is 11 V or more when ignition switch is ON.**
- **Voltage with asterisk (*) can not be measured by voltmeter because it is pulse signal. Check it with oscilloscope if necessary.**

**BCM connector “G30”**

| Terminal | Circuit | Normal voltage | Condition |
|---|---|---|---|
| G30-1 | Power source (IG) | 10 – 14 V | Ignition switch is at ON position |
| | | 0 V | Ignition switch is at any position other than ON position |
| G30-2 | Power source (ACC) | 10 – 14 V | Ignition switch is at ACC or ON position |
| | | 0 V | Ignition switch is at any position other than ACC or ON position |
| G30-3 | Key reminder switch | 10 – 14 V | Ignition key is inserted to ignition key cylinder |
| | | 0 V | Ignition key is pulled out from ignition key cylinder |
| G30-4 | Serial communication line for HVAC control module | *0 – 1 V<br>↑↓<br>10 – 14 V | Refer to “Reference waveform No. 1: ” |
| G30-5 | Serial communication line for information display and HVAC control module | *0 – 1V<br>↑↓<br>10 – 14 V | Refer to “Reference waveform No. 2: ” |
| G30-6 | Rear wiper switch | *0 – 1 V<br>↑↓<br>10 – 14 V | Refer to “Reference waveform No. 3: ” |
| | | 0 V | Ignition switch is at ON position and rear wiper switch is at ON position |

www.cargeek.ir

 www.CarGeek.ir

| Terminal | Circuit | Normal voltage | Condition |
|---|---|---|---|
| G30-7 | Rear wiper INT switch | 0 – 1 V<br>↑↓<br>10 – 14 V | Refer to “Reference waveform No. 3: ” |
| | | 0 V | Ignition switch is at ON position and rear wiper switch is at INT position |
| G30-8 | — | — | — |
| G30-9 | Front fog light switch | 10 – 14 V | Lighting switch is at CLEARANCE position and front fog light switch is at ON position |
| | | 0 V | Lighting switch is at CLEARANCE position and front fog light switch is at OFF position |
| G30-10 | Lighting switch (HEAD) | 10 – 14 V | Lighting switch is at any position other than HEAD position |
| | | 0 V | Lighting switch is at HEAD position |
| G30-11 | Lighting switch (CLEARANCE) | 10 – 14 V | Lighting switch is at OFF position |
| | | 0 V | Lighting switch is at any position other than OFF position |
| G30-12 | Ground for body electrical controller | 0 V | Ignition switch is at each position |
| G30-13 | — | — | — |
| G30-14 | — | — | — |
| G30-15 | — | — | — |
| G30-16 | Alarm indicator light | 10 – 14 V | Alarm indicator light is not lit up |
| | | 0 V | Alarm indicator light is lit up |
| G30-17 | — | — | — |
| G30-18 | — | — | — |
| G30-19 | Serial communication line of SDM | *0 – 1 V<br>↑↓<br>4 – 6 V | Refer to “Reference waveform No. 4: ” |
| G30-20 | — | — | — |
| G30-21 | Lighting switch (AUTO) | 10 – 14 V | Lighting switch is at other than AUTO position |
| | | 0 V | Lighting switch is at AUTO position |
| G30-22 | Vehicle speed signal output | *0 – 1 V<br>↑↓<br>10 – 14 V | Refer to “Reference waveform No. 5: ” |
| G30-23 | — | — | — |
| G30-24 | — | — | — |

**BCM connector “G31”**

| Terminal | Circuit | Normal voltage | Condition |
|---|---|---|---|
| G31-1 | CAN communication line (high) for DLC | *2.5 – 3.6 V | Refer to “Reference waveform No. 6: ” |
| G31-2 | CAN communication line (high) for each control module | *2.5 – 3.6 V | |
| G31-3 | CAN communication line (low) for DLC | *1.6 – 2.5 V | |
| G31-4 | CAN communication line (low) for each control module | *1.6 – 2.5 V | |
| G31-5 | — | — | — |
| G31-6 | — | — | — |
| G31-7 | Brake fluid level switch | *5 – 12 V | Refer to “Reference waveform No. 7: ” |
| | | 0 V | Ignition switch is at ON position and brake fluid level is lower than MIN level |
| G31-8 | Parking brake switch | *5 – 12 V | Refer to “Reference waveform No. 7: ” |
| | | 0 V | Ignition switch is at ON position and parking brake lever is pulled up |
| G31-9 | Oil pressure switch | *6 – 14 V | Refer to “Reference waveform No. 8: ” |
| | | 0 V | Ignition switch is at ON position and engine is at stop |

www.cargeek.ir

| Terminal | Circuit | Normal voltage | Condition |
|---|---|---|---|
| G31-10 | Generator “L” terminal | 10 – 14 V | Engine is running |
| | | 0 V | Ignition switch is at ON position |
| G31-11 | — | — | — |
| G31-12 | Tail light relay control | 10 – 14 V | Lighting switch is at OFF position |
| | | 0 V | Lighting switch is at any position other than OFF position |
| G31-13 | Rear wiper control | 10 – 14 V | Ignition switch is at ON position and rear wiper is not in operation |
| | | 0 V | Ignition switch is at ON position and rear wiper is in operation |
| G31-14 | Rear end door window defogger control | 10 – 14 V | Engine is running and rear end door window defogger is not in operation |
| | | 0 V | Engine is running and rear end door window defogger is in operation |
| G31-15 | Horn control | 10 – 14 V | Horn is not in operation |
| | | 0 V | Horn is in operation |
| G31-16 | DRL control | 10 – 14 V | Engine is running and lighting switch is at CLEARANCE or OFF position |
| | | 0 V | Engine is running and lighting switch is at HEAD position |
| G31-17 | Front fog light control | 10 – 14 V | Lighting switch is at CLEARANCE position and front fog light switch is at OFF position |
| | | 0 V | Lighting switch is at CLEARANCE position and front fog light switch is at ON position |
| G31-18 | Power supply for keyless receiver | 4 – 6 V | Ignition switch is at ON position |
| G31-19 | Signal for keyless receiver | *0 – 1 V<br>↑↓<br>10 – 14 V | Refer to “Reference waveform No. 9: ” |
| G31-20 | Ground for keyless receiver | 0 V | Ignition switch is at each position |
| G31-21 | Sensor ground for outside air temperature sensor | 0 V | Ignition switch is at each position |
| G31-22 | Sensor ground for auto light sensor | 0 V | Ignition switch is at each position |
| G31-23 | Auto-on headlight sensor | 0.2 V | Ignition switch is at ON position and cover auto-on headlight sensor lens by hand |
| | | 3 – 4 V | Ignition switch is at ON position and light auto-on headlight sensor lens by 100 W lights |
| G31-24 | Outside air temperature sensor | About 1.5 V | Ignition switch is at ON position and outside air temperature approx. 20 °C (68 °F) |
| G31-25 | Power supply for auto light sensor | 4 – 6 V | Ignition switch is at ON position |
| G31-26 | Manual door lock switch (Unlock) | 4 – 6 V | Manual door lock switch is at any position other than unlock position |
| | | 0 V | Manual door lock switch is at unlock position |
| G31-27 | Manual door lock switch (Lock) | 4 – 6 V | Manual door lock switch is at any position other than lock position |
| | | 0 V | Manual door lock switch is at lock position. |
| G31-28 | Power/Normal mode switch | 4 – 6 V | Ignition switch is at ON position and Power/Normal mode switch is at ON position |
| | | 0 V | Ignition switch is at ON position and Power/Normal mode switch is at OFF position |
| G31-29 | — | — | — |
| G31-30 | — | — | — |
| G31-31 | — | — | — |
| G31-32 | — | — | — |
| G31-33 | — | — | — |
| G31-34 | Turn signal / hazard warning relay control | 0 V | Hazard warning switch is at ON position |
| | | 10 – 14 V | Hazard warning switch is at OFF position |
| G31-35 | Serial communication line of data link connector | 10 – 14 V | Ignition switch is at ON position |

www.cargeek.ir

 www.CarGeek.ir

| Terminal | Circuit | Normal voltage | Condition |
|---|---|---|---|
| G31-36 | Driver side door key cylinder switch (Unlock) | 10 – 14 V | Driver side key cylinder switch is at any position other than unlock position |
| | | 0 V | Driver side key cylinder switch is at unlock position |
| G31-37 | Driver side door key cylinder switch (lock) | 10 – 14 V | Driver side key cylinder switch is at any position other than lock position |
| | | 0 V | Driver side key cylinder switch is at lock position |
| G31-38 | Door switch (rear end door and other than driver side door) | 10 – 14 V | Rear right and left side door, passenger side door, rear end door and rear end door are closed |
| | | 0 V | Any one of the door is opened (except driver side door) |
| G31-39 | Driver side door switch | 10 – 14 V | Driver side door is closed |
| | | 0 V | Driver side door is opened |
| G31-40 | Driver seat belt switch | *5 – 12 V | Refer to “Reference waveform No. 7: ” |
| | | 0 V | Ignition switch is at ON position and driver seat belt is unfastened |

**BCM connector “G32”**

| Terminal | Circuit | Normal voltage | Condition |
|---|---|---|---|
| G32-1 | Ground for door lock motor | 0 V | Ignition switch is at each position |
| G32-2 | Rear door lock actuator motor control (Unlock) | 10 – 14 V | Unlock signal is output for rear door lock actuators |
| | | 0 V | Unlock signal is not output for rear door lock actuators |
| G32-3 | Door lock actuator motor control (Lock) | 10 – 14 V | Lock signal is output for all door lock actuators |
| | | 0 V | Lock signal is not output for all door lock actuators |
| G32-4 | — | — | — |
| G32-5 | Power supply for door lock actuator motor | 10 – 14 V | Ignition switch is at each position |
| G32-6 | — | — | — |
| G32-7 | Rear end door lock actuator motor control (Unlock) | 10 – 14 V | Unlock signal is output for rear end door lock actuator |
| | | 0 V | Unlock signal is not output for rear end door lock actuator |
| G32-8 | Driver side door lock actuator motor control (Unlock) | 10 – 14 V | Unlock signal is output for driver side door lock actuator |
| | | 0 V | Unlock signal is not output for driver side door lock actuator |
| G32-9 | Passenger side door lock actuator motor control (Unlock) | 10 – 14 V | Unlock signal is output for passenger side door lock actuator |
| | | 0 V | Unlock signal is not output for passenger side door lock actuator |
| G32-10 | Door lock actuator motor control (Dead lock cancel) | 10 – 14 V | Driver side key cylinder is turned to unlock position |
| | | 0 V | Driver side key cylinder is at any position other than unlock position |
| G32-11 | Door lock actuator motor control (Dead lock set) | 10 – 14 V | Driver side key cylinder is turned to lock twice within 3 seconds |
| | | 0 V | Driver side key cylinder is at any position other than lock position |
| G32-12 | Headlight high beam monitor signal | 10 – 14 V | Lighting switch is at HEAD position and dimmer switch is at low beam position |
| | | 0 V | Lighting switch is at HEAD position and dimmer switch is at high beam position |
| G32-13 | Power supply for interior light | 10 – 14 V | Ignition switch is at each position |
| G32-14 | — | — | — |
| G32-15 | Interior light control | 10 – 14 V | Interior light switch is at DOOR position and interior light is not lit up |
| | | 0 V | Interior light switch is at DOOR position and interior light is lit up |

www.cargeek.ir

**Reference waveform No. 1**
HVAC control module serial communication signal (1)

| | |
|---|---|
| Measurement terminal | CH1: “G30-4” to “G30-12” |
| Oscilloscope setting | CH1: 5 V / DIV<br>TIME: 2 ms / DIV |
| Measurement condition | Ignition switch is at ON position |

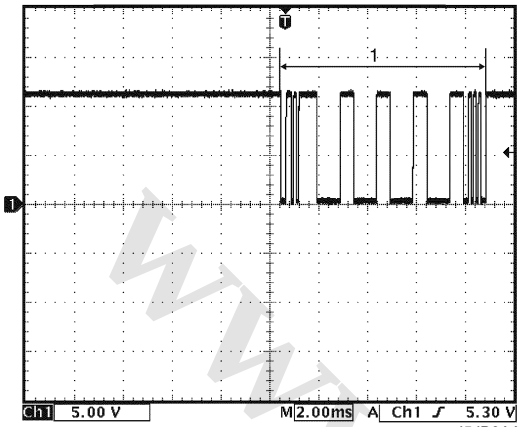

I5JB0AA20013-01

**Reference waveform No. 2**
HVAC control module and information display serial communication signal (1)

| | |
|---|---|
| Measurement terminal | CH2: “G30-5” to “G30-12” |
| Oscilloscope setting | CH1: 5 V/DIV<br>TIME: 10 ms/DIV |
| Measurement condition | Ignition switch is at ON position |

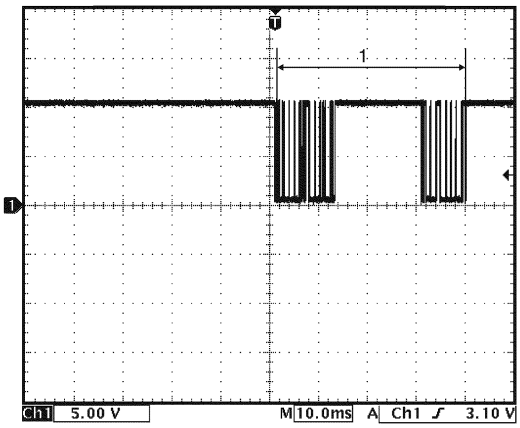

I5JB0AA20014-01

**Reference waveform No. 3**
Rear wiper LOW or INT signal (1)

| | |
|---|---|
| Measurement terminal | Rear wiper LOW signal:<br>CH1: “G30-6” to “G30-12”<br>Rear wiper INT signal:<br>CH1: “G30-7” to “G30-12” |
| Oscilloscope setting | CH2: 5 V/DIV<br>TIME: 10 ms/DIV |
| Measurement condition | Rear wiper LOW signal:<br>• Ignition switch is at ON position, rear wiper switch is at any position other than LOW position<br>Rear wiper INT signal:<br>• Ignition switch is at ON position, rear wiper switch is at any position other than INT position |

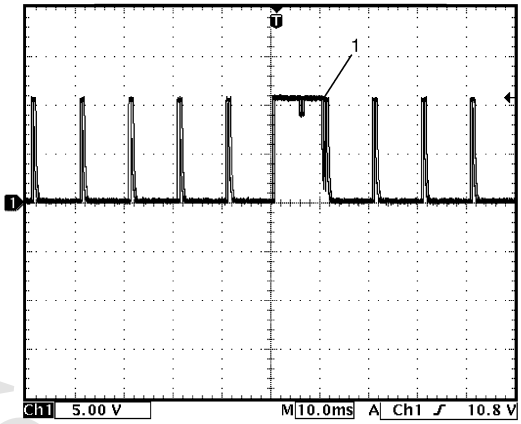

I5JB0AA20015-01

**Reference waveform No. 4**
SDM communication signal (1)

| | |
|---|---|
| Measurement terminal | CH1: “G30-19” to “G30-12” |
| Oscilloscope setting | CH1: 2 V/DIV<br>TIME: 400 ms/ DIV |
| Measurement condition | Ignition switch is at ON position |

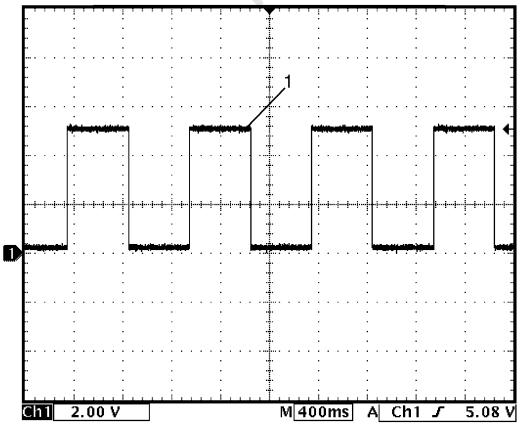

I5JB0AA20016-01

www.cargeek.ir

 www.CarGeek.ir

**Reference waveform No. 5**

Vehicle speed pulse output signal (1)

| | |
|---|---|
| Measurement terminal | CH1: “G30-22” to “G30-12” |
| Oscilloscope setting | CH1: 5 V / DIV<br>TIME: 200 ms / DIV |
| Measurement condition | Vehicle speed at 10 km/h (6 mph) |

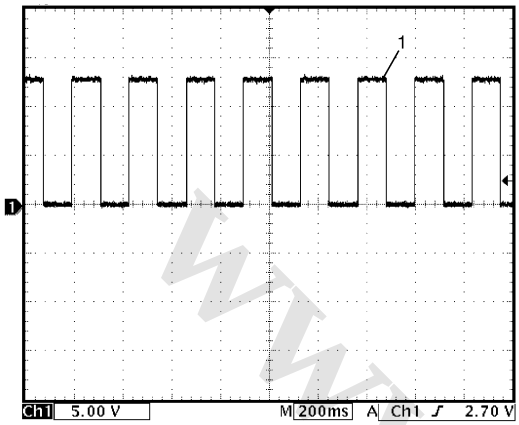


I5JB0AA20017-01

**Reference waveform No. 6**

CAN communication signal

| | |
|---|---|
| Measurement terminal | CAN communication signal for DLC<br>CH1: “G31-1” to “G30-12”<br>CH2: “G31-3” to “G30-12”<br>CAN communication signal for each control module<br>CH1: “G31-2” to “G30-12”<br>CH2: “G31-4” to “G30-12” |
| Oscilloscope setting | CH1: 1 V / DIV<br>CH2: 1 V / DIV<br>TIME: 40 μs / DIV |
| Measurement condition | Ignition switch is at ON position |

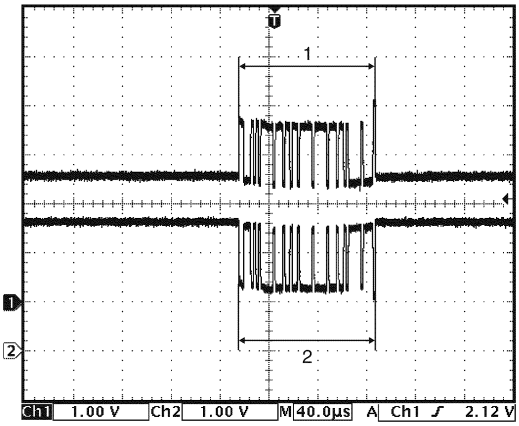


I5JB0AA20018-01

| | |
|---|---|
| 1. | CAN communication line signal (High) |
| 2. | CAN communication line signal (Low) |

**Reference waveform No. 7**

Brake fluid level, parking brake or driver seat belt switch signal (1)

| | |
|---|---|
| Measurement terminal | Brake fluid level switch signal:<br>CH1: “G31-7” to “G30-12”<br>Parking brake switch signal:<br>CH1: “G31-8” to “G30-12”<br>Driver side seat belt switch signal:<br>CH1: “G31-40” to “G30-12” |
| Oscilloscope setting | CH1: 2 V / DIV<br>TIME: 20 ms / DIV |
| Measurement condition | Brake fluid level switch:<br>• Ignition switch is at ON position and brake fluid level is at specified level<br>Parking brake switch:<br>• Ignition switch is at ON position and parking brake lever is released.<br>Driver side seat belt switch:<br>• Ignition switch is at ON position and driver seat belt is fastened |

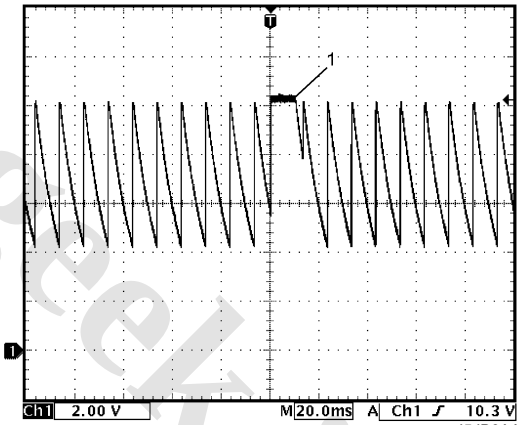


I5JB0AA20019-01

www.cargeek.ir

**Reference waveform No. 8**
Oil pressure switch signal (1)

| | |
|---|---|
| Measurement terminal | CH1: “G31-9” to “G30-12” |
| Oscilloscope setting | CH1: 2 V / DIV<br>TIME: 20 ms / DIV |
| Measurement condition | Engine is running and oil pressure is in normal condition |

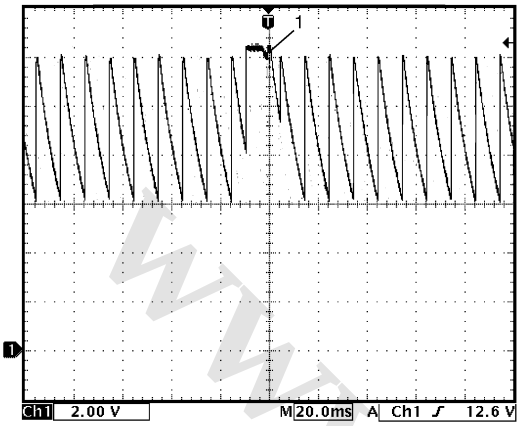

I5JB0AA20020-01

**Reference waveform No. 9**
Keyless entry receiver signal (1)

| | |
|---|---|
| Measurement terminal | CH2: “G31-19” to “G30-12” |
| Oscilloscope setting | CH2: 2 V / DIV<br>TIME: 200 ms / DIV |
| Measurement condition | Lock or unlock button of key less entry transmitter is pushed |

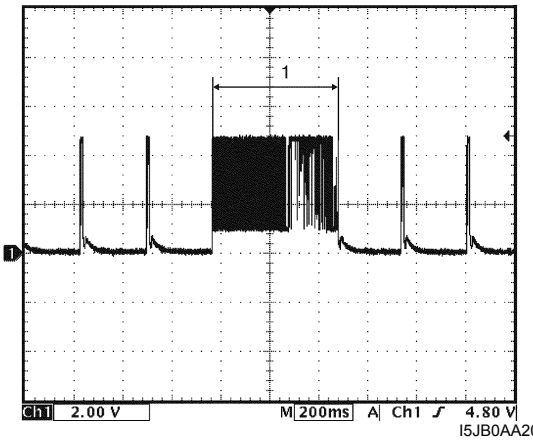

I5JB0AA20021-01

# Repair Instructions

## BCM Removal and Installation

S5JB0AA206001

### Removal

1) Disconnect negative cable from battery.
2) Remove steering column hole cover (1).
3) Disconnect connectors from BCM.
4) Remove BCM (2).

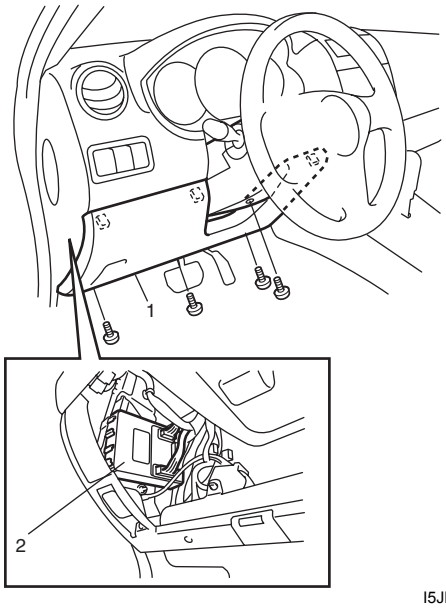

I5JB0AA20022-01

### Installation

Reverse removal procedure for installation, noting following point.

- Connect connectors securely until it clicks.

## Outside Air Temperature Sensor Removal and Installation

S5JB0AA206002

For removal and installation, refer to “Outside Air Temperature Sensor Removal and Installation (If Equipped): in Section 9C”.

www.cargeek.ir

 www.CarGeek.ir

### Outside Air Temperature Sensor Inspection

S5JB0AA206003

For inspection, refer to “Outside Air Temperature Sensor Inspection (If Equipped): in Section 9C”.

**DRL function setting procedure**

DRL is controlled by BCM which has a function to set operable / non-operable mode of DRL. With a new BCM, its DRL is set to the non-operable mode.
Therefore, when BCM has been replaced in the country where DRL operation is required by the statutory regulation, set DRL to the operable mode according to the procedure described below.
Also, performing the same procedure when DRL is in the operable mode will change DRL setting to the non-operable mode.

1) Turn ignition switch to ON position.
2) Perform Steps a) through f) described blow within 15 seconds after Step 1).
   a) Turn lighting switch to CLEARANCE position.
   b) Turn lighting switch to OFF position.
   c) Repeat Steps a) and b) five times.
   d) Turn lighting switch to HEAD position.
   e) Turn lighting switch to OFF position.
   f) Repeat Steps a) and e) five times.
3) After Step f), buzzer sounds twice which indicates that DRL has been set to operable mode.

**NOTE**

**When DRL setting has been changed from operable mode to non-operable mode, buzzer sounds once.**

4) After confirming buzzer, turn ignition switch to OFF position.

## Special Tools and Equipment

### Special Tool

S5JB0AA208001

| | |
|---|---|
| SUZUKI scan tool<br>—<br>This kit includes following items. 1. Tech 2, 2. PCMCIA card, 3. DLC cable, 4. SAE 16/19 adapter, 5. Cigarette cable, 6. DLC loopback adapter, 7. Battery power cable, 8. RS232 cable, 9. RS232 adapter, 10. RS232 loop back connector, 11. Storage case, 12. Power supply ☞ 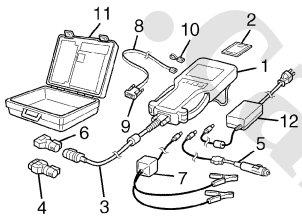  | |

www.cargeek.ir

www.cargeek.ir

www.CarGeek.ir


# Immobilizer Control System

## Precautions

### Precautions in Diagnosing Troubles

S5JB0AA300001

- Before confirming the diagnostic trouble code (DTC), do not disconnect connector from ECM, battery cable from battery, ground wire harness, or main fuse. Such disconnection will erase DTC stored in ECM.
- DTC stored in ECM memory can be checked as well as cleared by using SUZUKI scan tool. Before using SUZUKI scan tool, read its operator's manual carefully to know how to use it and what functions are available.
- Be sure to read "Precautions for Electrical Circuit Service: in Section 00" before inspection.
- Communication of ECM, BCM, and combination meter is established by CAN (Computer Area Network). Therefore, handle CAN communication lines with care referring to "Precaution for CAN Communication System: in Section 00".

### Precaution in Replacing ECM

S5JB0AA300002

- If ECM is replaced with new or used one without the functionality for the immobilizer control system, the engine will not be started. In case of the above, check if the newly installed ECM has the functionality for the immobilizer control system referring to its part number.
- After ECM is replaced with new one or used one, the transponder code in the transponder built in the ignition key has to be registered with ECM. Or, the engine cannot be started up. For the registration procedure, refer to "Procedure after ECM Replacement: ".

### Precautions in Handling Immobilizer Control System

S5JB0AA300003

- Do not turn ON ignition switch with ignition key in contact with another one or quite close to another one. Or, the immobilizer control system may detect some abnormal condition and prevent the engine from starting.

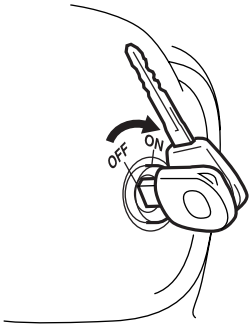


I3RH0AA30001-01

- Do not turn ON ignition switch by using ignition key with any type of metal (1) wrapped its grip or in contact with it. Or, the immobilizer control system may detect some abnormal condition and prevent the engine from starting.

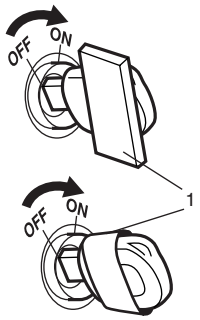


I3RH0AA30002-01

- Do not leave ignition key in a place where temperature is high. High temperature may cause damage to the transponder built in the ignition key.

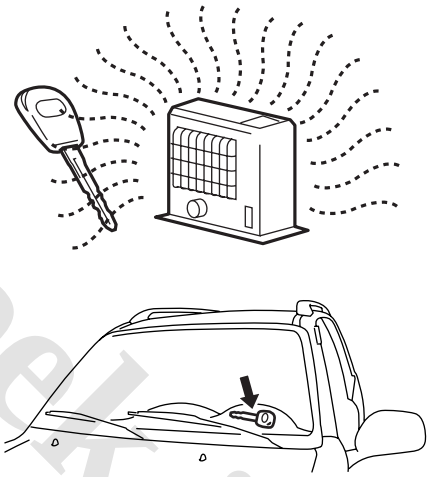

I3RH0AA30003-01

- Do not turn ignition switch to ON position by bringing radio antenna close to coil antenna. Or, the immobilizer control system may detect some abnormal condition and prevent the engine from starting.

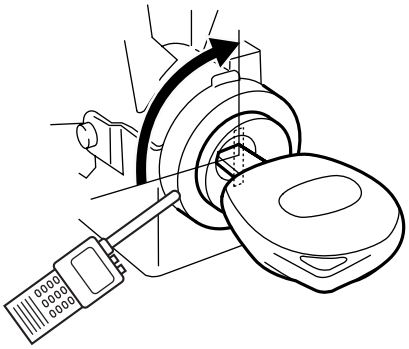

I3RH0AA30004-01

www.cargeek.ir

 www.CarGeek.ir

# General Description

## Immobilizer Control System Introduction

S5JB0AA301001

The immobilizer control system is an anti-theft device that immobilizes the vehicle. It stops the engine from working and prevents the vehicle from being stolen. It mainly consists of the following components.

- Engine Control Module (ECM)
- Immobilizer control module (ICM) with the built-in coil antenna
- Ignition key with the built-in transponder

A code called the transponder code is memorized in the transponder. And, the code is registered with ECM. Basically, when the ignition switch is turned ON, ECM reads the code by the coil antenna. Then, if the code in transponder in the ignition key does not match with the one registered with ECM, ECM stops the operation of the fuel injection so as not to start up the engine and turns the immobilizer indicator lamp ON and OFF using CAN communication lines. (In addition to the above operation, ECM also turns the immobilizer indicator lamp ON and OFF when some trouble is detected in the keyless start system.)

## Immobilizer Control System Components Location

S5JB0AA301002

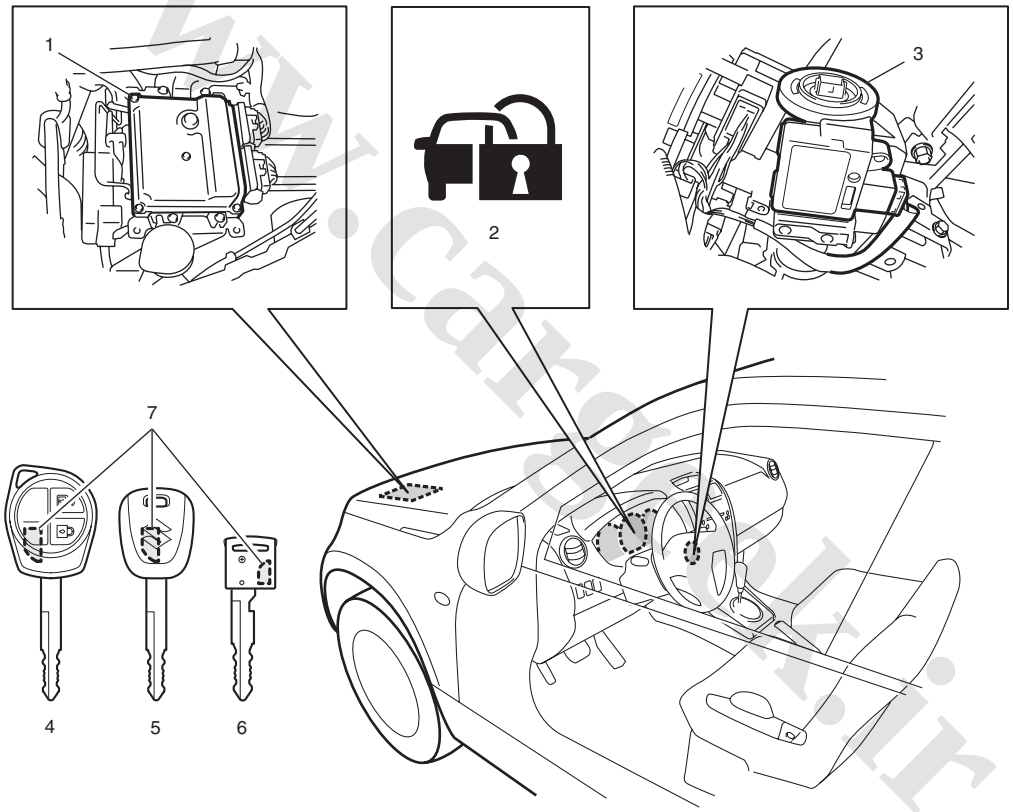


I5JB0AA30001-01

| | |
|---|---|
| 1. ECM | 5. Ignition key without keyless entry system |
| 2. Immobilizer indicator lamp | 6. Ignition key with keyless start system |
| 3. Immobilizer control module (ICM) | 7. Transponder |
| 4. Ignition key with keyless entry system | |

www.cargeek.ir

www.CarGeek.ir


## On-Board Diagnostic System Description (Self-diagnosis Function)

S5JB0AA301003

ECM diagnoses if there is any trouble with the immobilizer control system. The diagnostic information is stored as the diagnostic trouble code (DTC) in ECM. To read the diagnostic information, use SUZUKI scan tool referring to “Diagnostic Trouble Code (DTC) Check: ”.
With the ignition switch turned ON (but the engine at stop) regardless of the condition of the engine and emission control system, ECM indicates whether there is any trouble with the immobilizer control system or not by either lighting ON or flashing ON and OFF the immobilizer indicator lamp.

**Immobilizer indicator lamp lights ON:**
No trouble exists in the immobilizer control system. (After starting up the engine, the lamp turns OFF.)

**Immobilizer indicator lamp flashes ON and OFF:**
There is some trouble in the immobilizer control system or in the keyless start system. Its diagnostic information is stored in ECM.

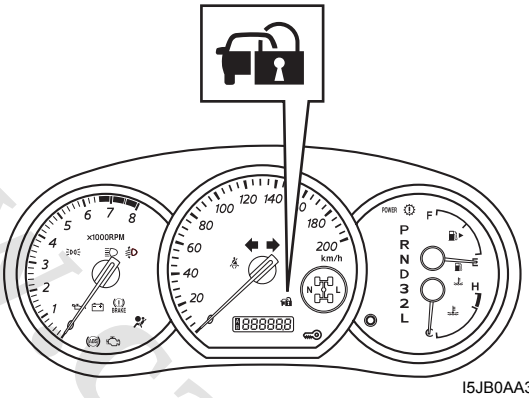

I5JB0AA30002-01

www.cargeek.ir

 www.CarGeek.ir

# Schematic and Routing Diagram

## Immobilizer Control System Wiring Circuit Diagram

S5JB0AA302001

**NOTE**

**For more details about power supply and ground wire circuits for ECM, BCM, ABS, keyless start control module and combination meter, refer to “System Circuit Diagram: in Section 9A”.**

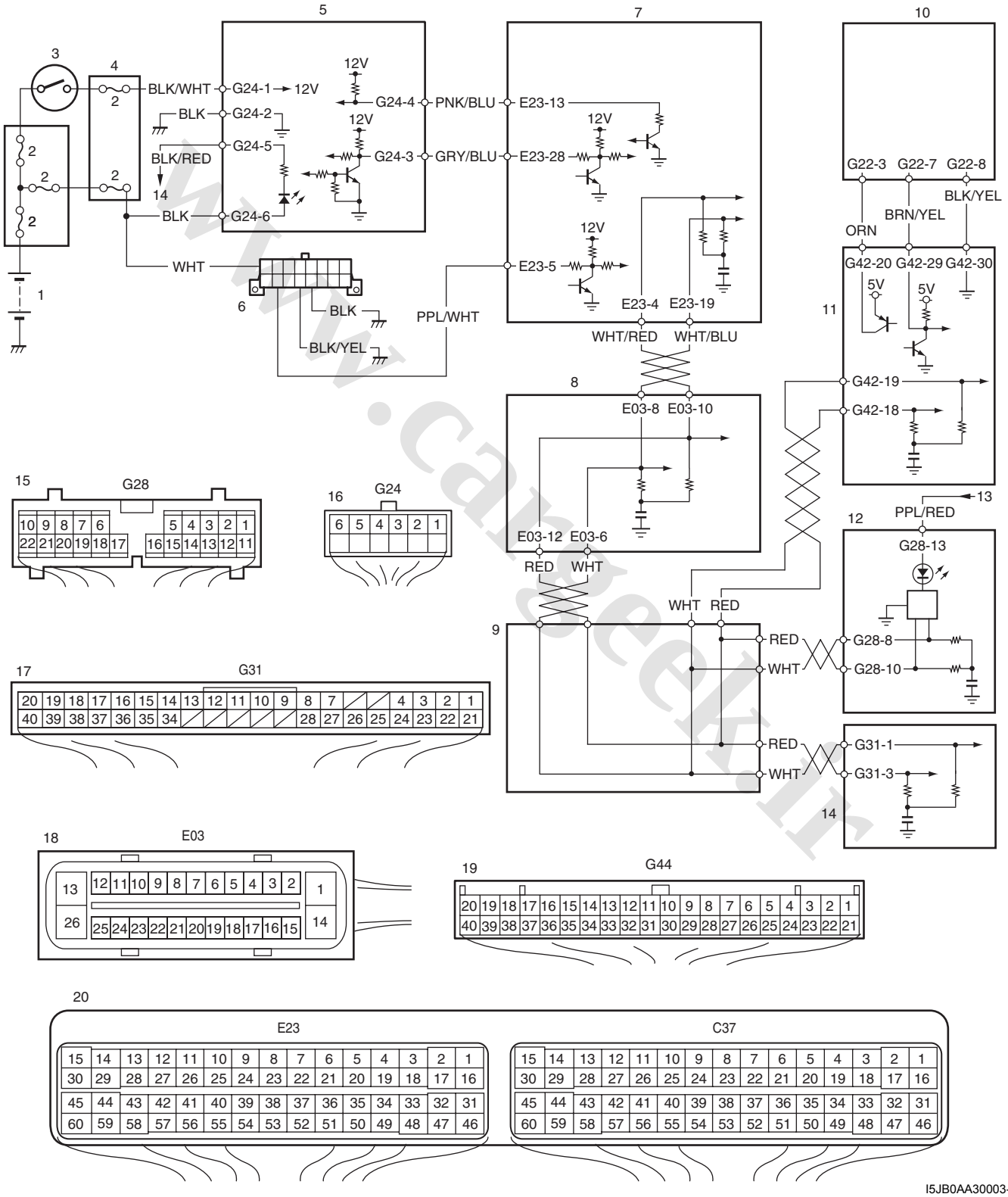


I5JB0AA30003-02

www.cargeek.ir

www.CarGeek.ir


| | | | |
|---|---|---|---|
| 1. Battery | 6. Data link connector (DLC) | 11. Keyless start control module | 16. Immobilizer control module (ICM) connector (harness side view) |
| 2. Fuse | 7. ECM | 12. Combination meter | 17. BCM connector (harness side view) |
| 3. Ignition switch | 8. ABS control module | 13. From fuse | 18. ABS control module connector (harness side view) |
| 4. Junction block assembly | 9. Junction connector | 14. BCM | 19. Keyless start control module connector (harness side view) |
| 5. Immobilizer control module (ICM) | 10. Steering lock unit | 15. Combination meter connector (harness side view) | 20. ECM connectors (harness side view) |

# Diagnostic Information and Procedures

## Immobilizer Control System Check

S5JB0AA304001

| Step | Action | Yes | No |
|---|---|---|---|
| 1 | **Immobilizer indicator lamp ON check**<br>1) Turn ignition switch to ON position using ignition key.<br>*Does immobilizer indicator lamp (1) come on?*<br> 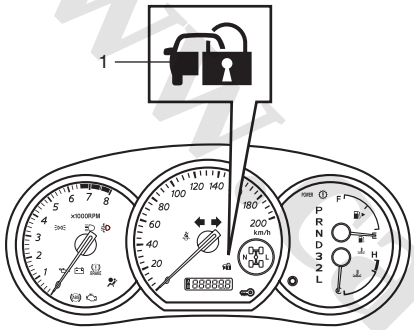 <br><br>I5JB0AA30004-01 | Go to Step 2. | Check if DTC P1636 and/or P1638 are detected by ECM referring to “Diagnostic Trouble Code (DTC) Check: ”. If detected, perform the troubleshooting referring to the corresponding flowchart in this section. If not detected, go to “Immobilizer Indicator Lamp Does Not Come ON with Ignition Switch ON and Engine Stop: ”. |
| 2 | **Immobilizer indicator lamp flash check**<br>*Does immobilizer indicator lamp flash on and off continuously in Step 1?* | Check what DTC is detected by ECM referring to “Diagnostic Trouble Code (DTC) Check: ”. Then, perform the troubleshooting referring to the corresponding flowchart in this section. | Go to Step 3. |
| 3 | **Engine start check**<br>1) Start engine using ignition key.<br>*Does engine start?* | Go to Step 4. | Perform “Engine and Emission Control System Check: in Section 1A”. |
| 4 | **Immobilizer indicator lamp remain ON check**<br>1) Check if immobilizer indicator lamp remains ON after engine start.<br>*Does immobilizer indicator lamp remain ON after engine start?* | Go to “Immobilizer Indicator Lamp Remains ON after Engine Start: ”. | Immobilizer control system is in good condition. Then, go to “Keyless Start System Check: in Section 10E” for the vehicle with keyless start system. |

www.cargeek.ir

 www.CarGeek.ir

## Diagnostic Trouble Code (DTC) Check

S5JB0AA304002

**NOTE**

**To know how to use SUZUKI scan tool in detail, refer to its operator's manual.**

1) Turn the ignition switch to OFF position.
2) Connect SUZUKI scan tool to data link connector (DLC) (1) located under instrument panel at driver's seat side.

**Special tool**
**(A): SUZUKI scan tool**

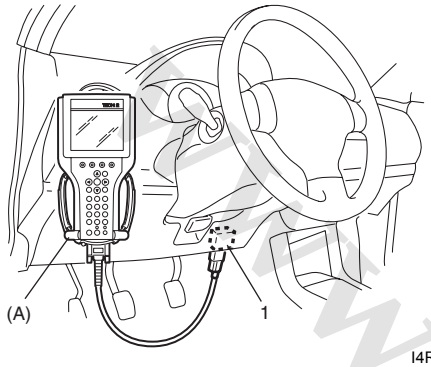


I4RS0BA30003-03

3) Turn the ignition switch to ON position.
4) Check if any DTC is stored in ECM according to the instructions displayed on SUZUKI scan tool.
5) After completing the check, turn ignition switch to OFF position, and then disconnect SUZUKI scan tool from DLC.

## Diagnostic Trouble Code (DTC) Clearance

S5JB0AA304003

**NOTE**

**To know how to use SUZUKI scan tool in detail, refer to its operator's manual.**

1) Turn the ignition switch to OFF position,
2) Connect SUZUKI scan tool to data link connector (DLC) (1) located under instrument panel at driver's seat side.

**Special tool**
**(A): SUZUKI scan tool**

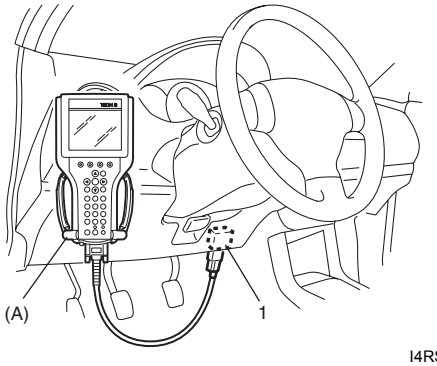


I4RS0BA30003-03

1) Turn the ignition switch to ON position.
2) Clear DTC(s) according to the instructions displayed on SUZUKI scan tool.
3) After completing the clearance, turn the ignition switch to OFF position, and then disconnect SUZUKI scan tool from DLC.

## Diagnostic Trouble Code (DTC) Table

S5JB0AA304004

### ECM

**NOTE**

**ECM detects diagnostic trouble code (DTC). Immobilizer control module (ICM) does not.**

| DTC No. | Detecting Item | Detecting Condition | Immobilizer Indicator Lamp |
|---|---|---|---|
| P1614 | Transponder response error | Transponder code in the transponder built in the ignition key cannot be read through immobilizer control module (ICM). | Flash |
| P1615 | Steering lock unit communication error (for vehicle with keyless start system) | • While registering the transponder code in the transponder built in the ignition key in ECM, the keyless start control module sent a signal to ECM indicating that the remote controller ID code could not be registered.<br>• The remote controller ID code could not be registered in the keyless start control module or ECM. And, the registration procedure of the transponder code in the transponder built in the ignition key was terminated forcibly. | Flash |
| P1616 | Unregistered keyless start control module (for vehicle with keyless start system) | ECM detects different ID codes registered in ECM and keyless start system. | Flash |

www.cargeek.ir

www.CarGeek.ir


| DTC No. | Detecting Item | Detecting Condition | Immobilizer Indicator Lamp |
|---|---|---|---|
| P1618 | Keyless start control module CAN communication error (for vehicle with keyless start system) | Reception error of communication data for keyless start control module is detected for longer than specified time continuously. | Flash |
| P1621 | Immobilizer communication line error | Communication error between immobilizer control module (ICM) and ECM is detected by ECM. | Flash |
| P1622 | EEPROM read/write error | EEPROM in ECM is corrupted. | Flash |
| P1623 | Unregistered transponder | Transponder code in the transponder built in the ignition key is invalid. | Flash |
| P1625 | Immobilizer antenna error | Immobilizer control module (ICM) is faulty. | Flash |
| P1636 | Immobilizer information registration failure | Communication error between ECM and BCM is detected by ECM. | No operation |
| P1638 | Immobilizer information mismatched | • Communication error between ECM and BCM is detected by ECM.<br>• Wrong ECM or BCM is used. | No operation |

**NOTE**

**If any DTC other than the above DTCs is detected, refer to "DTC Table: in Section 1A".**

## Scan Tool Data

S5JB0AA304005

The data listed below is the standard data obtained from the normal vehicle by using SUZUKI scan tool. Those are output from ECM. Use them as reference.

| Scan Tool Data | Vehicle Condition | Normal Data |
|---|---|---|
| NUMBER OF LEARNT KEY | Ignition switch at ON position | 0 – 4 |
| INPUT YEAR | Ignition switch at ON position | 2004 or later |
| INPUT MONTH | Ignition switch at ON position | 1 – 12 |

**Scan Tool Data Definitions**

**NUMBER OF LEARNT KEY**

**0 – 4 PCS:** The number of the transponder code in the transponder built in the ignition key that is registered with ECM

**NOTE**

**A maximum of four transponder codes can be registered with ECM. Therefore, the maximal value should be 4.**

**INPUT YEAR**

**20**:** The year in which the transponder code in the transponder built in the ignition key is registered with ECM

**INPUT MONTH**

**1 – 12:** The month in which the transponder code in the transponder built in the ignition key is registered with ECM

www.cargeek.ir

 www.CarGeek.ir

## Immobilizer Indicator Lamp Does Not Come ON with Ignition Switch ON and Engine Stop

S5JB0AA304012

### Wiring Diagram

Refer to “Immobilizer Control System Wiring Circuit Diagram: ”.

### Circuit Description

When the ignition switch is turned ON, ECM transmits the indication ON signal to the combination meter to turn ON the immobilizer indicator lamp in case that there is not any problem with the immobilizer control system. Then, the combination meter turns ON the lamp. When the engine is started up, ECM transmits the indication OFF signal to the combination meter to turn OFF the lamp. Then, the combination meter turns OFF the immobilizer indicator lamp. However, in case that there is some trouble with the immobilizer control system, the immobilizer indicator lamp flashes ON and OFF when the ignition switch is turned ON.

### Troubleshooting

| Step | Action | Yes | No |
|---|---|---|---|
| 1 | **Immobilizer indicator lamp power supply check**<br>1) Turn the ignition switch to ON position.<br>*Do other warning lights come ON?* | Go to Step 2. | Go to Step 3. |
| 2 | **Diagnostic Trouble Code (DTC) check**<br>1) Check if DTC P1674, P1675, P1678 and/or P1685 are detected by ECM referring to “Diagnostic Trouble Code (DTC) Check: ”.<br>*Is any of them detected?* | Perform the troubleshooting referring to the corresponding flowchart in Section 1A. | Replace combination meter with a known-good one and recheck. If the immobilizer indicator lamp still remains OFF, replace ECM with a known-good one and recheck. |
| 3 | **Fuse check**<br>1) Turn the ignition switch to OFF position.<br>2) Check if any related fuse is blown.<br>*Is any fuse blown?* | Replace blown fuse, and then check for short. | Go to Step 4. |
| 4 | **Combination meter power supply wire circuit check**<br>1) Remove combination meter referring to “Combination Meter Removal and Installation: in Section 9C”.<br>2) Check for proper connection at “G28-13” and “G28-15” wire terminals of combination meter connector.<br>3) If OK, turn the ignition switch to ON position and measure voltage between “G28-13” wire terminal of combination meter and vehicle body ground.<br>*Is it 10 – 14 V?* | Go to Step 5. | Repair open in power supply wire circuit. |
| 5 | **Combination meter ground wire circuit check**<br>1) Turn ignition switch OFF position.<br>2) Measure resistance between “G28-15” terminal of combination meter connector and vehicle body ground.<br>*Is resistance 1 Ω or less?* | Replace combination meter with a know-good one and recheck. If the immobilizer indicator lamp still remains OFF, replace ECM with a known-good one and recheck. | Repair open or high resistance in ground wire circuit. |

www.cargeek.ir

www.CarGeek.ir


## Immobilizer Indicator Lamp Remains ON after Engine Start

S5JB0AA304013

### Wiring Diagram

Refer to “Immobilizer Control System Wiring Circuit Diagram: ”.

### Circuit Description

When the ignition switch is turned ON, ECM transmits the indication ON signal to the combination meter to turn ON the immobilizer indicator lamp in case that there is not any problem with the immobilizer control system. Then, the combination meter turns ON the lamp. When the engine is started up, ECM transmits the indication OFF signal to the combination meter to turn OFF the lamp. Then, the combination meter turns OFF the immobilizer indicator lamp. However, in case that there is some trouble with the immobilizer control system, the immobilizer indicator lamp flashes ON and OFF when the ignition switch is turned ON.

### Troubleshooting

| Step | Action | Yes | No |
|---|---|---|---|
| 1 | **Diagnostic Trouble Code (DTC) check**<br>1) Start engine.<br>2) Check if any DTC is detected by ECM referring to “Diagnostic Trouble Code (DTC) Check: ”.<br>*Is any DTC detected?* | Go to “Immobilizer Control System Check: ”. | Go to Step 2. |
| 2 | **CAN communication wire circuits check**<br>1) Check CAN communication wire circuits between combination meter and ECM referring to “DTC P1674: CAN Communication (Bus Off Error): in Section 1A”.<br>*Are wire circuits in good condition?* | Replace combination meter with a known-good one and recheck. If the immobilizer indicator lamp remains OFF, replace ECM with a known-good one and recheck. | Repair the malfunctional wire circuit. |

## DTC P1614: Transponder Response Error

S5JB0AA304006

### Detecting Condition and Trouble Area

| Detecting Condition | Trouble Area |
|---|---|
| Transponder code in the transponder built in the ignition key cannot be read through immobilizer control module (ICM). | • Use of the ignition key without the transponder<br>• Use of the unregistered ignition key<br>• Corruption of the transponder in the ignition key<br>• Immobilizer control module (ICM) faulty<br>• ECM faulty |

### Troubleshooting

| Step | Action | Yes | No |
|---|---|---|---|
| 1 | **Diagnostic Trouble Code (DTC) confirmation**<br>1) Clear DTC(s) referring to “Diagnostic Trouble Code (DTC) Clearance: ”.<br>2) Turn the ignition switch to OFF position.<br>3) Check if any DTC is detected referring to “Diagnostic Trouble Code (DTC) Check: ”.<br>*Is DTC P1614 still detected?* | Go to Step 2. | The troubleshooting is completed. |
| 2 | **Diagnostic Trouble Code (DTC) check**<br>1) Check if any DTC other than P1614 is detected referring to “Diagnostic Trouble Code (DTC) Check: ”.<br>*Is any DTC other than P1614 is detected?* | Perform troubleshooting referring to the corresponding flowchart in this section, and then go to Step 3. | Go to Step 3. |

www.cargeek.ir

 www.CarGeek.ir

| Step | Action | Yes | No |
|---|---|---|---|
| 3 | **Registration of the ignition key in use with ECM and Diagnostic Trouble Code (DTC) Check**<br>1) There is a possibility that the unregistered ignition key is used. Therefore, register the transponder code in the transponder in the ignition key with ECM referring to “Registration of the Ignition Key: ”.<br>2) Check if DTC P1614 is detected referring to “Diagnostic Trouble Code (DTC) Check: ”.<br>*Is DTC P1614 detected?* | Go to Step 4. | The troubleshooting is completed. |
| 4 | **Registration of the new ignition key with ECM and Diagnostic Trouble Code (DTC) check**<br>1) The transponder in the ignition key is corrupted or the ignition key without the transponder is used. Therefore, prepare the new ignition key.<br>2) Register the transponder code in the transponder in the new ignition key with ECM referring to “Registration of the Ignition Key: ”.<br>3) Check if that DTC P1614 is detected referring to “Diagnostic Trouble Code (DTC) Check: ”.<br>*Is DTC P1614 detected?* | Go to Step 5. | The troubleshooting is completed. |
| 5 | **Immobilizer control module (ICM) check**<br>1) Check immobilizer control module (ICM) referring to “Inspection of Immobilizer Control Module (ICM) and Its Circuit: ”.<br>*Is immobilizer control module (ICM) normal?* | Replace ECM with new one referring to “Engine Control Module (ECM) Removal and Installation: in Section 1C”, and then perform “Procedure after ECM Replacement: ”. | Replace immobilizer control module (ICM) with new one referring to “Immobilizer Control Module (ICM) Removal and Installation: ”. |

## DTC P1615: Steering Lock Unit Communication Error (for Vehicle with Keyless Start System)

S5JB0AA304014

### Circuit Description

When the transponder code in the ignition key is registered in ECM, the remote controller ID code is registered in both ECM and keyless start control module at the same time. This DTC is detected only in case that the remote controller ID code cannot be registered in both ECM and keyless start control module when the transponder code in the ignition key is registered in ECM.

**NOTE**

- **Perform the troubleshooting for DTC P1618 first if both DTC P1615 and P1618 are detected at the same time.**
- **After replacing ECM, be sure to register the transponder code in the ignition key with ECM referring to “Registration of the Ignition Key: ”. After replacing the keyless start control module of the vehicle equipped with the keyless start system, be sure to perform “Registration of the Ignition Key: ”.**

### Detecting Condition and Trouble Area

| Detecting Condition | Trouble Area |
|---|---|
| • While registering the transponder code in ECM, the keyless start control module sent a signal to ECM indicating that the remote controller ID code could not be registered.<br>• The remote controller ID code could not be registered in the keyless start control module or ECM. And, the registration of the transponder code in ECM was terminated forcibly. | • Wire circuits between steering lock unit and keyless start control unit open or shorted<br>• CAN communication wire circuits faulty<br>• Steering lock unit faulty<br>• Keyless start control module faulty<br>• ECM faulty |

www.cargeek.ir

www.CarGeek.ir


**Troubleshooting**

| Step | Action | Yes | No |
|---|---|---|---|
| 1 | **Diagnostic Trouble Code (DTC) confirmation**<br>1) Clear DTC(s) referring to “Diagnostic Trouble Code (DTC) Clearance: ”.<br>2) Turn the ignition switch to OFF position.<br>3) Check if any DTC is detected referring to “Diagnostic Trouble Code (DTC) Check: ”.<br>*Is DTC P1615 still detected?* | Go to Step 2. | The troubleshooting is completed. |
| 2 | **Registration of the ignition key**<br>1) Turn the ignition switch to OFF position.<br>2) Turn the ignition switch to ON position, and register the transponder code in the transponder in the ignition key with ECM referring to “Registration of the Ignition Key: ”.<br>*Was it possible to register the ignition key (transponder code) in ECM?* | The troubleshooting is completed. | Go to Step 3. |
| 3 | **Diagnostic Trouble Code (DTC) check**<br>1) Check if any DTC is detected referring to “Diagnostic Trouble Code (DTC) Check: ”.<br>*Is any DTC detected?* | Go to Step 4. | Replace ECM with a known-good one and recheck. |
| 4 | **Diagnostic Trouble Code (DTC) check**<br>*Is any DTC other than P1615 detected in Step 3?* | Perform the troubleshooting referring to the corresponding flowchart. | Go to Step 5. |
| 5 | **Steering lock unit check**<br>1) Turn on the engine start knob of the keyless start system.<br>*Is the engine start knob at ON position?* | Replace the steering lock unit with a known-good one and recheck. | Go to Step 6. |
| 6 | **Steering lock unit operation check**<br>1) Check the steering lock unit for operation referring to “Ignition Switch Inspection: in Section 9C”.<br>*Does the engine start knob operate as specified?* | Go to Step 7. | Replace the steering lock unit referring to “Steering Lock Assembly (Ignition Switch) Removal and Installation: in Section 6B”. |
| 7 | **Check for open in wire circuits between steering lock unit and keyless start control module**<br>1) Disconnect steering lock unit connector “G22” and keyless start control module connector “G42”.<br>2) Measure resistance at the following connector terminals.<br>• Between “G22-3” terminal of steering lock unit connector and “G42-20” terminal of keyless start control module connector.<br>• Between “G22-7” terminal of steering lock unit connector and “G42-29” terminal of keyless start control module connector.<br>• Between “G22-8” terminal of steering lock unit connector and “G42-30” terminal of keyless start control module connector.<br>*Is each resistance 1 Ω or less?* | Go to Step 8. | Repair open or high resistance in malfunctional wire circuit. |

www.cargeek.ir

 www.CarGeek.ir

| Step | Action | Yes | No |
|---|---|---|---|
| 8 | **Check for short of wire circuits between steering lock unit and keyless start control module**<br>1) Measure resistance at the following connector terminals.<br>• Between “G22-3”, “G22-7” and “G22-8” terminal of steering lock unit connector.<br>• Between “G42-20”, “G42-29” and “G42-30” terminal of keyless start control module.<br>*Is each resistance infinity?* | Go to Step 9. | Make sure of insulation of each wire circuit. |
| 9 | **Check for short to ground wire circuit in wire circuits between steering lock unit and keyless start control module**<br>1) Measure resistance at the following connector terminals.<br>• Between “G22-3” terminal of steering lock unit connector and vehicle body ground.<br>• Between “G22-7” terminal of steering lock unit connector and vehicle body ground.<br>• Between “G22-8” terminal of steering lock unit connector and vehicle body ground.<br>• Between “G42-20” terminal of keyless start control module connector and vehicle body ground.<br>• Between “G42-29” terminal of keyless start control module connector and vehicle body ground.<br>• Between “G42-30” terminal of keyless start control module connector and vehicle body ground.<br>*Is each resistance infinity?* | Go to Step 10. | Repair short to ground wire circuit in malfunctional wire circuit. |
| 10 | **Check for short to power supply wire circuit in wire circuits between steering lock unit and keyless start control module**<br>1) Measure voltage at the following connector terminals with ignition switch turned ON.<br>• Between “G22-3” terminal of steering lock unit connector and vehicle body ground.<br>• Between “G22-7” terminal of steering lock unit connector and vehicle body ground.<br>• Between “G22-8” terminal of steering lock unit connector and vehicle body ground.<br>• Between “G42-20” terminal of keyless start control module connector and vehicle body ground.<br>• Between “G42-29” terminal of keyless start control module connector and vehicle body ground.<br>• Between “G42-30” terminal of keyless start control module connector and vehicle body ground.<br>*Is each voltage 0 – 1 V?* | Replace keyless start control module with a known-good one and recheck. If DTC P1615 is still detected, replace ECM with a known-good one and recheck. | Repair short to power supply wire circuit in malfunctional wire circuit. |

www.cargeek.ir

www.cargeek.ir

www.CarGeek.ir


## DTC P1616: Unregistered Keyless Start Control Module (for Vehicle with Keyless Start System)

S5JB0AA304015

### Circuit Description

P1616 is detected when ECM detects different ID codes registered in ECM and keyless control module after turning engine start knob to ON position. Normally, when keyless start control module is replaced with new one, ECM automatically registers the applicable code in keyless start control module after turning ignition switch to ON position. However, when keyless start control module is replaced with used one, ECM does not automatically register the applicable code in keyless start control module even if ignition switch is turned to ON position.

### Detecting Condition and Trouble Area

| Detecting Condition | Trouble Area |
|---|---|
| ECM detects different ID codes registered in ECM and keyless control module. | • Keyless start control unit faulty<br>• ECM faulty |

### Troubleshooting

| Step | Action | Yes | No |
|---|---|---|---|
| 1 | **Diagnostic Trouble Code (DTC) confirmation**<br>1) Clear DTC(s) referring to “Diagnostic Trouble Code (DTC) Clearance: ”.<br>2) Turn the ignition switch to OFF position.<br>3) Check if any DTC is detected referring to “Diagnostic Trouble Code (DTC) Table: ”.<br>*Is DTC P1616 still detected?* | Go to Step 2. | The troubleshooting is completed. |
| 2 | **Registration of the ignition key**<br>1) Clear DTC referring to “Diagnostic Trouble Code (DTC) Clearance: ”.<br>2) Register the transponder code in the transponder in the ignition key with ECM referring to “Registration of the Ignition Key: ”.<br>*Was it possible to register the ignition key (transponder code) in ECM?* | Go to Step 3. | Go to Step 4. |
| 3 | **Keyless start system operation check**<br>1) Start engine using keyless start system.<br>*Does engine start?* | The troubleshooting is completed. | Check if any DTC is detected by ECM. If detected, perform the troubleshooting referring to the corresponding flowchart. |
| 4 | **Diagnostic Trouble Code (DTC) check**<br>1) Check ECM for DTC referring to “Diagnostic Trouble Code (DTC) Check: ”.<br>*Are DTC P1618 and/or P1615 detected other than P1616?* | Go to DTC P1618 troubleshooting. | Go to DTC P1615 troubleshooting. |

## DTC P1618: Keyless Start Control Module CAN Communication Error (for Vehicle with Keyless Start System)

S5JB0AA304016

### Detecting Condition and Trouble Area

| Detecting Condition | Trouble Area |
|---|---|
| Reception error of communication data for keyless start control module is detected for longer than specified time continuously. | • CAN communication wire circuits faulty<br>• Keyless start control module faulty<br>• ABS faulty<br>• ECM faulty |

www.cargeek.ir

 www.CarGeek.ir

**Troubleshooting**

| Step | Action | Yes | No |
|---|---|---|---|
| 1 | **Diagnostic Trouble Code (DTC) confirmation**<br>1) Clear DTC(s) referring to “Diagnostic Trouble Code (DTC) Clearance: ”.<br>2) Turn the ignition switch to OFF position.<br>3) Check if any DTC is detected referring to “Diagnostic Trouble Code (DTC) Check: ”.<br>*Is DTC P1618 still detected?* | Go to Step 2. | The troubleshooting is completed. |
| 2 | **Diagnostic Trouble Code (DTC) check in ECM**<br>*Is any DTC other than P1618 detected in Step 1?* | Perform the troubleshooting referring to the corresponding flowchart. | Go to Step 3. |
| 3 | **Poor connection check at ECM, ABS and keyless start control module connectors**<br>1) With the ignition key at OFF position, check each connector and wire terminal at ECM, ABS and keyless control module for secure connection.<br>*Is each connector and wire terminal connected securely?* | Go to Step 4. | Repair poor connection(s). |
| 4 | **Check for open and high resistance in CAN communication wire circuits between ABS and keyless start control module**<br>1) Disconnect connector “E03” from ABS referring to “ABS Hydraulic Unit / Control Module Assembly Removal and Installation: in Section 4E”.<br>2) Disconnect connector “G42” from keyless start control module referring to “Keyless start control module Removal and Installation: in Section 10E”.<br>3) Measure resistance at the following wire terminals.<br>• Between “E03-12” wire terminal at ABS connector and “G42-19” wire terminal at keyless start control module connector<br>• Between “E03-6” wire terminal at ABS connector and “G42-18” wire terminal at keyless start control module connector<br>*Is each resistance 1 Ω or less?* | Go to Step 5. | Repair open or high resistance in malfunctional wire circuit. |
| 5 | **Check for short between CAN communication wire circuits between ABS and keyless start control module**<br>1) Disconnect connector “G31” from BCM connector referring to “BCM Removal and Installation: in Section 10B”.<br>2) Disconnect connector “G28” from combination meter referring to “Combination Meter Removal and Installation: in Section 9C”.<br>3) Measure resistance between “E03-12” wire terminal at ABS connector and “G42-18” wire terminal at keyless start control module connector.<br>*Is resistance infinite?* | Go to Step 6. | Repair short between CAN communication wire circuits. |

www.cargeek.ir

www.CarGeek.ir


| Step | Action | Yes | No |
|---|---|---|---|
| 6 | **Check for short to ground wire circuit in CAN communication wire circuits**<br>1) Measure resistance at the following wire terminals.<br>• Between “E03-6” wire terminal at ABS connector and body ground<br>• Between “E03-12” wire terminal at ABS connector and body ground<br>*Is resistance infinite?* | Go to Step 7. | Repair short to ground wire circuit in CAN communication wire circuits. |
| 7 | **Check for short to power supply wire circuit in CAN communication wire circuits**<br>1) Measure resistance at the following wire terminals with the ignition switch at ON position.<br>• Between “E03-6” wire terminal at ABS connector and body ground<br>• Between “E03-12” wire terminal at ABS connector and body ground<br>*Is voltage 0 V?* | Go to Step 8. | Repair short to power supply wire circuit in CAN communication wire circuits. |
| 8 | **Check of keyless start control module power and ground wire circuits**<br>1) Check keyless start control module power and ground wire circuits referring to “Keyless Start Control Module Power and Ground Circuit Check: in Section 10E”.<br>*Are they in normal?* | Replace keyless start control module with a known-good one and recheck. | Repair malfunctional wire circuit. |

## DTC P1621: Immobilizer Communication Line Error

S5JB0AA304007

### Detecting Condition and Trouble Area

| Detecting Condition | Trouble Area |
|---|---|
| Communication error between immobilizer control module (ICM) and ECM is detected by ECM. | • Related fuse(s) blown<br>• Poor connection at immobilizer control module (ICM) connector<br>• Poor connection at ECM connector<br>• Open in power supply wire circuit<br>• Open in ground wire circuit<br>• Open in communication wire circuits<br>• Short to ground wire circuit in communication wire circuits<br>• Short to power supply wire circuit in communication wire circuits<br>• Short of communication wire circuits<br>• Immobilizer control module (ICM) faulty<br>• ECM faulty |

www.cargeek.ir

 www.CarGeek.ir

**Troubleshooting**

| Step | Action | Yes | No |
|---|---|---|---|
| 1 | **Diagnostic Trouble Code (DTC) confirmation**<br>1) Clear DTC(s) referring to “Diagnostic Trouble Code (DTC) Clearance: ”.<br>2) Turn the ignition switch to OFF position.<br>3) Check if any DTC is detected referring to “Diagnostic Trouble Code (DTC) Check: ”.<br>*Is DTC P1621 still detected?* | Go to Step 2. | The troubleshooting is completed. |
| 2 | **Fuse check**<br>1) Check if any related fuse is blown.<br>*Is any fuse blown?* | Replace blown fuse(s) with new one(s). | Go to Step 3. |
| 3 | **Immobilizer control module (ICM) poor connection check**<br>1) Disconnect immobilizer control module (ICM) connector “G24” referring to “Immobilizer Control Module (ICM) Removal and Installation: ”.<br>2) Check if wire connections are normal at immobilizer control module (ICM) connector “G24”.<br>*Is each wire connection normal?* | Go to Step 4. | Repair poor connection(s). |
| 4 | **ECM poor connection check**<br>1) Disconnect ECM connector “E23” referring to “Engine Control Module (ECM) Removal and Installation: in Section 1C”.<br>2) Check if wire connections at “E23-13” and “E23-28” wire terminals are normal.<br>*Is each wire connection normal?* | Go to Step 5. | Repair poor connection(s). |
| 5 | **Check for open in power supply wire circuit**<br>1) Connect immobilizer control module (ICM) connector “G24” referring to “Immobilizer Control Module (ICM) Removal and Installation: ”.<br>2) With the ignition switch at ON position, check voltage between “G24-1” wire terminal at immobilizer control module (ICM) and body ground.<br>*Is voltage about 12 V?* | Go to Step 6. | Repair open in power supply wire circuit. |
| 6 | **Check for open in ground wire circuit**<br>1) With the ignition switch at ON position, check voltage between “G24-2” wire terminal at immobilizer control module (ICM) and body ground.<br>*Is voltage 0?* | Go to Step 7. | Repair open in ground wire circuit. |
| 7 | **Check for open in communication wire circuit**<br>1) Disconnect immobilizer control module (ICM) connector “G24” referring to “Immobilizer Control Module (ICM) Removal and Installation: ”.<br>2) Disconnect ECM connector “E23” referring to “Engine Control Module (ECM) Removal and Installation: in Section 1C”.<br>3) Check resistance between “G24-3” wire terminal at immobilizer control module (ICM) connector and “E23-28” wire terminal at ECM connector.<br>*Is resistance infinite?* | Repair open in communication wire circuit. | Go to Step 8. |

www.cargeek.ir

| Step | Action | Yes | No |
|---|---|---|---|
| 8 | **Check for short to ground circuit in communication wire circuit**<br>1) With immobilizer control module (ICM) connector “G24” and ECM connector “E23” disconnected, check resistance between “G24-3” wire terminal at immobilizer control module (ICM) connector and body ground.<br>*Is resistance infinite?* | Go to Step 9. | Repair short to ground wire circuit in communication wire circuit. |
| 9 | **Check for short to power circuit in communication wire circuit**<br>1) With immobilizer control module (ICM) connector “G24” and ECM connector “E23” disconnected, turn the ignition switch to ON position.<br>2) Check voltage between “G24-3” wire terminal at immobilizer control module (ICM) connector and body ground.<br>*Is voltage 0 V?* | Go to Step 10. | Repair short to power supply wire circuit in communication wire circuit. |
| 10 | **Check for open in communication wire circuit**<br>1) With immobilizer control module (ICM) connector “G24” and ECM connector “E23” disconnected, check resistance between “G24-4” wire terminal at immobilizer control module (ICM) connector and “E23-13” wire terminal at ECM connector.<br>*Is resistance infinite?* | Repair open in communication wire circuit. | Go to Step 11. |
| 11 | **Check for short to ground wire circuit in communication wire circuit**<br>1) With immobilizer control module (ICM) connector “G24” and ECM connector “E23” disconnected, check resistance between “G24-4” wire terminal at immobilizer control module (ICM) connector and body ground.<br>*Is resistance infinite?* | Go to Step 12. | Repair short to ground wire circuit in communication wire circuit. |
| 12 | **Check for short to power circuit in communication wire circuit**<br>1) With immobilizer control module (ICM) connector “G24” and ECM connector “E23” disconnected, turn the ignition switch to ON position.<br>2) Check voltage between “G24-4” wire terminal at immobilizer control module (ICM) connector and body ground.<br>*Is voltage 0 V?* | Go to Step 13. | Repair short to power supply wire circuit in communication wire circuit. |
| 13 | **Check for short of communication wire circuit**<br>1) With immobilizer control module (ICM) connector “G24” and ECM connector “E23” disconnected, check resistance between “G24-3” wire terminal and “G24-4” wire terminal at immobilizer control module (ICM) connector.<br>*Is resistance infinite?* | Go to Step 14. | Repair short of communication wire circuits. |

www.cargeek.ir

 www.CarGeek.ir

| Step | Action | Yes | No |
|---|---|---|---|
| 14 | **Immobilizer control module (ICM) check**<br>1) Check immobilizer control module (ICM) referring to “Inspection of Immobilizer Control Module (ICM) and Its Circuit: ”.<br>*Is immobilizer control module (ICM) normal?* | Replace ECM with new one referring to “Engine Control Module (ECM) Removal and Installation: in Section 1C”, and then perform “Procedure after ECM Replacement: ”. | Replace immobilizer control module (ICM) with new one referring to “Immobilizer Control Module (ICM) Removal and Installation: ”. |

## DTC P1622: EEPROM Error

S5JB0AA304008

### Detecting Condition and Trouble Area

| Detecting Condition | Trouble Area |
|---|---|
| EEPROM in ECM is corrupted. | Internal failure (EEPROM corruption) of ECM |

### Troubleshooting

1) Clear DTC(s) referring to “Diagnostic Trouble Code (DTC) Clearance: ”.
2) Turn the ignition switch to OFF position.
3) Check if DTC P1622 is still detected referring to “Diagnostic Trouble Code (DTC) Check: ”. If still detected, go to the next step. If not, the troubleshooting is completed.
4) Replace ECM with new one referring to “Engine Control Module (ECM) Removal and Installation: in Section 1C”.
5) Perform “Procedure after ECM Replacement: ”.

## DTC P1623: Unregistered Transponder

S5JB0AA304009

### Detecting Condition and Trouble Area

| Detecting Condition | Trouble Area |
|---|---|
| Transponder code in the transponder built in the ignition key is invalid. | • Use of the unregistered ignition key<br>• Immobilizer control module (ICM) faulty<br>• ECM faulty |

### Troubleshooting

| Step | Action | Yes | No |
|---|---|---|---|
| 1 | **Diagnostic Trouble Code (DTC) confirmation**<br>1) Clear DTC(s) referring to “Diagnostic Trouble Code (DTC) Clearance: ”.<br>2) Turn the ignition switch to OFF position.<br>3) Check if any DTC is detected referring to “Diagnostic Trouble Code (DTC) Check: ”.<br>*Is DTC P1623 still detected?* | Go to Step 2. | The troubleshooting is completed. |
| 2 | **Diagnostic Trouble Code (DTC) check**<br>*Is any DTC other than P1623 is detected in Step 1?* | Perform the troubleshooting referring to the corresponding flowchart, and then go to Step 3. | Go to Step 3. |
| 3 | **Registration of the unregistered ignition key with ECM and Diagnostic Trouble Code (DTC) check**<br>1) Register the transponder code in the transponder in the unregistered ignition key with ECM referring to “Registration of the Ignition Key: ”.<br>2) Check if that DTC P1623 is detected referring to “Diagnostic Trouble Code (DTC) Check: ”.<br>*Is DTC P1623 detected?* | Go to Step 4. | The troubleshooting is completed. |

www.cargeek.ir

www.CarGeek.ir


| Step | Action | Yes | No |
|---|---|---|---|
| 4 | **Immobilizer control module (ICM) check**<br>1) Check immobilizer control module (ICM) referring to “Inspection of Immobilizer Control Module (ICM) and Its Circuit: ”.<br>*Is immobilizer controller assembly normal?* | Replace ECM with new one referring to “Engine Control Module (ECM) Removal and Installation: in Section 1C”, and then perform “Procedure after ECM Replacement: ”. | Replace immobilizer control module (ICM) with new one referring to “Immobilizer Control Module (ICM) Removal and Installation: ”. |

## DTC P1625: Immobilizer Antenna Error

S5JB0AA304010

### Detecting Condition and Trouble Area

| Detecting Condition | Trouble Area |
|---|---|
| Immobilizer control module (ICM) is faulty. | • Immobilizer control module faulty<br>• ECM faulty |

### Troubleshooting

| Step | Action | Yes | No |
|---|---|---|---|
| 1 | **Diagnostic Trouble Code (DTC) confirmation**<br>1) Clear DTC(s) referring to “Diagnostic Trouble Code (DTC) Clearance: ”.<br>2) Turn the ignition switch to OFF position.<br>3) Check if any DTC is detected referring to “Diagnostic Trouble Code (DTC) Check: ”.<br>*Is DTC P1625 still detected?* | Go to Step 2. | The troubleshooting is completed. |
| 2 | **Immobilizer control module (ICM) replacement and Diagnostic Trouble Code (DTC) check**<br>1) Replace immobilizer control module (ICM) referring to “Immobilizer Control Module (ICM) Removal and Installation: ”.<br>2) Check if DTC P1625 is still detected referring to “Diagnostic Trouble Code (DTC) Check: ”.<br>*Is DTC P1625 still detected?* | Replace ECM with new one referring to “Engine Control Module (ECM) Removal and Installation: in Section 1C”, and then perform “Procedure after ECM Replacement: ”. | The troubleshooting is completed. |

www.cargeek.ir

 www.CarGeek.ir

## DTC P1636: Immobilizer Information Registration Failure

S5JB0AA304017

### DTC Detecting Condition and Trouble Area

| Detecting Condition | Trouble Area |
|---|---|
| The registration of the immobilizer control system information in ECM is failed. | • CAN communication wire circuits faulty<br>• BCM faulty<br>• ABS faulty<br>• ECM faulty |

### Troubleshooting

| Step | Action | Yes | No |
|---|---|---|---|
| 1 | **Diagnostic Trouble Code (DTC) confirmation**<br>1) Clear DTC(s) referring to “Diagnostic Trouble Code (DTC) Clearance: ”.<br>2) Turn the ignition switch to OFF position.<br>3) Check if any DTC is detected referring to “Diagnostic Trouble Code (DTC) Check: ”.<br>*Is DTC P1636 still detected?* | Go to Step 2. | The troubleshooting is completed. |
| 2 | **Diagnostic Trouble Code (DTC) check in ECM**<br>*Is any DTC other than P1636 detected in Step 1?* | Perform the troubleshooting referring to the corresponding flowchart. | Go to Step 3. |
| 3 | **Diagnostic Trouble Code (DTC) check in BCM**<br>1) Check BCM for DTC referring to “DTC Check: in Section 10B”.<br>*Is any DTC detected?* | Perform the troubleshooting referring to the corresponding flowchart in Section 10B. | Go to Step 4. |
| 4 | **Replacement of BCM**<br>1) Replace BCM with new one referring to “BCM Removal and Installation: in Section 10B”.<br>2) Check ECM for DTC referring to “Diagnostic Trouble Code (DTC) Check: ”.<br>*Is DTC P1636 still detected?* | Go to Step 5. | The troubleshooting is completed. |
| 5 | **Replacement of ECM**<br>1) Replace ECM with new one referring to “Engine Control Module (ECM) Removal and Installation: in Section 1C”.<br>2) Check ECM for DTC referring to “Diagnostic Trouble Code (DTC) Check: ”.<br>*Is DTC P1636 still detected?* | Recheck CAN communication wire circuits and poor connection at ECM, ABS and BCM connectors. | The troubleshooting is completed. |

www.cargeek.ir

www.CarGeek.ir


## DTC P1638: Immobilizer Information Mismatched

S5JB0AA304018

### DTC Detecting Condition and Trouble Area

| Detecting Condition | Trouble Area |
|---|---|
| • The immobilizer control system information in ECM and the one in BCM does not match.<br>• The registration of the immobilizer control system information in ECM is failed. | • Use of the wrong ECM<br>• CAN communication wire circuits faulty<br>• BCM faulty<br>• ABS faulty<br>• ECM faulty |

### Troubleshooting

| Step | Action | Yes | No |
|---|---|---|---|
| 1 | **Diagnostic Trouble Code (DTC) confirmation**<br>1) Clear DTC(s) referring to “Diagnostic Trouble Code (DTC) Clearance: ”.<br>2) Turn the ignition switch to OFF position.<br>3) Check if any DTC is detected referring to “Diagnostic Trouble Code (DTC) Check: ”.<br>*Is DTC P1638 still detected?* | Go to Step 2. | The troubleshooting is completed. |
| 2 | **Diagnostic Trouble Code (DTC) confirmation**<br>1) Disconnect negative (–) cable from battery for more than 5 seconds.<br>2) Connect negative (–) cable to battery.<br>3) Check if any DTC is detected referring to “Diagnostic Trouble Code (DTC) Check: ”.<br>*Is DTC P1638 still detected?* | Go to Step 3. | The troubleshooting is completed. |
| 3 | **Check ECM specification**<br>1) Check ECM part number to see if ECM is applicable to the vehicle in service.<br>*Is a correct ECM used for the vehicle in service?* | Go to Step 2. | Replace ECM with the correct one and recheck if DTC P1638 is still detected by ECM. |
| 4 | **Diagnostic Trouble Code (DTC) check in ECM**<br>*Is any DTC other than P1638 detected in Step 1?* | Perform the troubleshooting referring to the corresponding flowchart. | Go to Step 3. |
| 5 | **Diagnostic Trouble Code (DTC) check in BCM**<br>1) Check BCM for DTC referring to “DTC Check: in Section 10B”.<br>*Is any DTC detected?* | Perform the troubleshooting referring to the corresponding flowchart in Section 10B. | Go to Step 5. |
| 6 | **Replacement of BCM**<br>1) Replace BCM with new one referring to “BCM Removal and Installation: in Section 10B”.<br>2) Check ECM for DTC referring to “Diagnostic Trouble Code (DTC) Check: ”.<br>*Is DTC P1638 still detected?* | Go to Step 6. | The troubleshooting is completed. |
| 7 | **Replacement of ECM**<br>1) Replace ECM with new one referring to “Engine Control Module (ECM) Removal and Installation: in Section 1C”.<br>2) Check ECM for DTC referring to “Diagnostic Trouble Code (DTC) Check: ”.<br>*Is DTC P1638 still detected?* | Recheck CAN communication wire circuits and poor connection at ECM, ABS and BCM connectors. | The troubleshooting is completed. |

www.cargeek.ir

 www.CarGeek.ir

## Inspection of Immobilizer Control Module (ICM) and Its Circuit

S5JB0AA304011

Immobilizer control module (ICM) and its circuit can be checked at immobilizer control module (ICM) wiring connector by measuring voltage.

**⚠ CAUTION**

**Immobilizer control module (ICM) cannot be checked by itself. It is strictly prohibited to connect voltmeter or ohmmeter to immobilizer control module (ICM) with connector disconnected from it.**

### Voltage Check

1) Remove immobilizer control module (ICM) (1) from steering lock assembly or steering lock unit referring to “Immobilizer Control Module (ICM) Removal and Installation: ”.
2) Connect immobilizer control module (ICM) connector (2) to immobilizer control module (ICM).
3) Check voltage at each terminal.

**NOTE**

**As each terminal voltage is affected by the battery voltage, confirm that it is 11 V or more when the ignition switch is turned to ON position.**

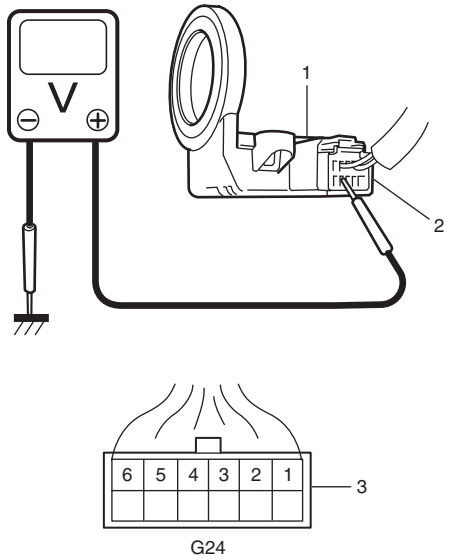


I5JB0AA30005-01

3. Immobilizer control module (ICM) connector (harness side view)

| Connector | Terminal | | Circuit | Normal Voltage | Condition |
|---|---|---|---|---|---|
| G24 | 1 | BLK/WHT | Power supply | About 12.0 V | Ignition switch at ON position |
| | | | | 0.0 V | Ignition switch at OFF position |
| | 2 | BLK | Ground | 0.0 V | Ignition switch at ON position |
| | | | | 0.0 V | Ignition switch at OFF position |
| | 3 | GRY/BLU | Serial communication line | See the reference waveform. | — |
| | | | | 0.0 V | Ignition switch at OFF position |
| | 4 | PNK/BLU | Clock line | See the reference waveform. | — |
| | | | | 0.0 V | Ignition switch at OFF position |
| | 5 | BLK/RED | Illumination ring ground | 0 V | • Ignition key not inserted to the key cylinder<br>• Door opened |
| | | | | 0 V → 12 V | • Ignition key at OFF position<br>• From the time door is closed to the time interior light faded out completely<br>(As the interior light fades out, the voltage increases.) |
| | | | | 0 V → 12 V | • Door closed<br>• From the ignition switch is turned ON to the time interior light is completely faded out<br>(As the interior light fades out, the voltage increases.) |
| | 6 | WHT | Illumination ring power supply | About 12.0 V | Ignition switch at ON position |
| | | | | About 12.0 V | Ignition switch at OFF position |

www.cargeek.ir

**Reference Waveform**

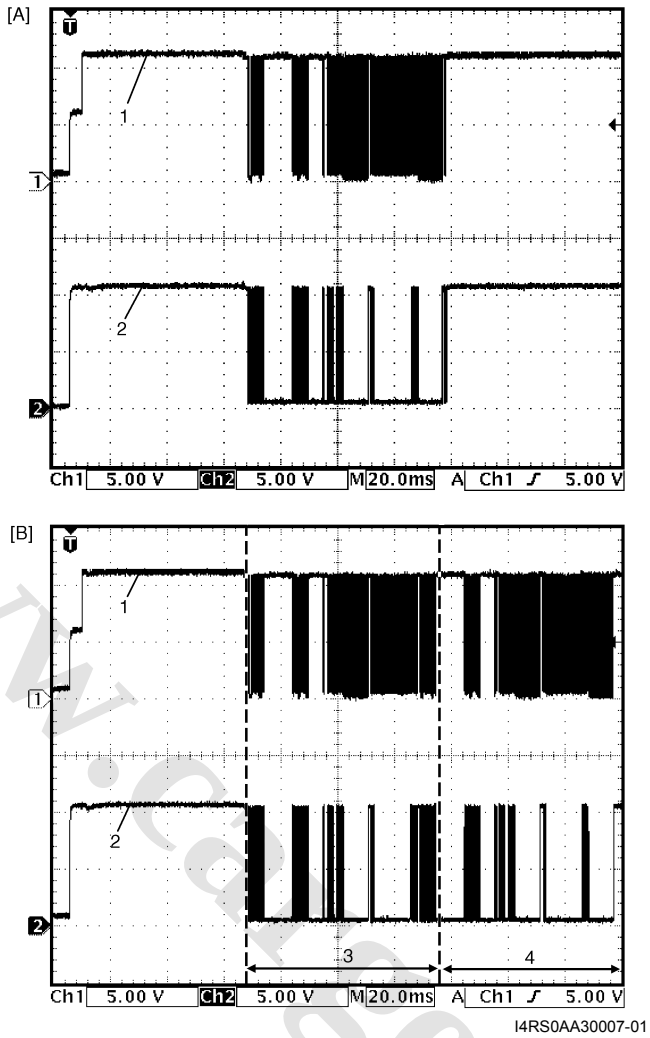


| | |
|---|---|
| [A]: | The transponder code read successfully at the first try. |
| [B]: | The transponder code read successfully at the second try. |
| 1. | Serial communication line |
| 2. | Clock line |
| 3. | First try |
| 4. | Second try |

**NOTE**

**When ECM cannot read the transponder code at the first try, ECM tries to read the transponder code repeatedly up to 8 times. The second waveform is the example showing that ECM read the transponder code successfully at the second try.**

| | |
|---|---|
| Measurement terminals | CH1: G24-3 to G24-2<br>CH2: G24-4 to G24-2 |
| Oscilloscope settings | CH1: 5 V/DIV<br>CH2: 5 V/DIV<br>TIME: 20 ms |
| Measurement condition | Right after the ignition switch is turned ON, the waveform can be read. |

www.cargeek.ir

 www.CarGeek.ir

# Repair Instructions

## Immobilizer Control Module (ICM) Removal and Installation

S5JB0AA306001

### Removal

1) Disconnect negative (–) cable from battery.
2) Disable air bag system referring to “Disabling Air Bag System: in Section 8B”.
3) Remove driver air bag (inflator) module referring to “Driver Air Bag (Inflator) Module Removal and Installation: in Section 8B”.
4) Remove steering wheel referring to “Steering Wheel Removal and Installation: in Section 6B”.
5) Remove steering column lower and upper covers.
6) Remove engine start knob (1) if equipped with keyless start system.

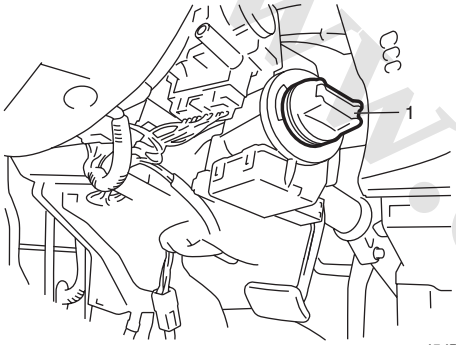


I5JB0AA30006-01

7) Disconnect connector (1) from immobilizer control module (ICM) (2).
8) Remove a screw (3) from immobilizer control module (ICM).

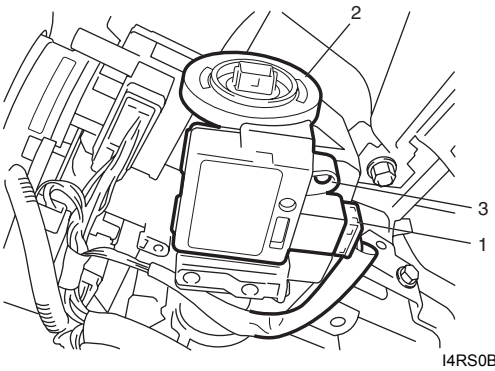


I4RS0BA30007-03

9) Remove immobilizer control module (ICM) from steering lock assembly or steering lock unit.

**NOTE**

**The antenna part of immobilizer control module (ICM) is fragile. Therefore, do not add strong power to the part or twist the part.**

### Installation

Reverse the removal procedure.

## Registration of the Ignition Key

S5JB0AA306002

To finish the registration of the ignition key, the transponder code memorized in the transponder built in the ignition key has to be registered with ECM. To register the transponder code with ECM, perform “Register Ig Key” mode of SUZUKI scan tool referring to “SUZUKI Tech 2 Operator’s Manual”.

**NOTE**

- **A maximum of four transponder codes can be registered with ECM.**
- **At an early part of the registration process, all transponder codes of the ignition keys in use already registered with ECM are cleared. Therefore, before starting the registration, prepare all ignition keys in use in addition to the new ignition key(s) to be registered with ECM.**

## Procedure after ECM Replacement

S5JB0AA306003

After ECM is replaced with new one or used one, the transponder code in the transponder built in the ignition key has to be registered with ECM. To register transponder code in the ignition key with ECM, perform “Replace New ECM” mode of SUZUKI scan tool referring to “SUZUKI Tech 2 Operator’s Manual”.

**NOTE**

**A maximum of four transponder codes can be registered with ECM.**

www.cargeek.ir

www.CarGeek.ir


# Special Tools and Equipment

## Special Tool

S5JB0AA308001

| | |
|---|---|
| SUZUKI scan tool<br>—<br>This kit includes following items. 1. Tech 2, 2. PCMCIA card, 3. DLC cable, 4. SAE 16/19 adapter, 5. Cigarette cable, 6. DLC loopback adapter, 7. Battery power cable, 8. RS232 cable, 9. RS232 adapter, 10. RS232 loop back connector, 11. Storage case, 12. Power supply ☞ / ☞ 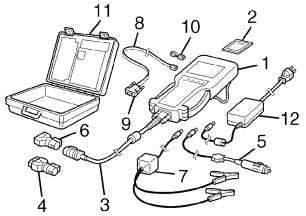  | |

www.cargeek.ir

www.CarGeek.ir

# Keyless Start System

## General Description

### Keyless Start System Description

S5JB0AA501001

Keyless start system consisting of the parts shown below has three functions as described below.

- Keyless engine start function:
  With the remote controller which has been registered in the keyless start control module carried with oneself, the engine can be started without using the ignition key.
- Door lock function:
  Pushing the request switch incorporated in the outside handle of the driver side door, passenger side door or rear end door while carrying the remote controller which has been registered in the keyless start control module, doors can be locked or unlocked.
- Keyless entry system function:
  It is possible to lock or unlock doors by pushing the lock or unlock button of remote controller.

The keyless start control module can accept registration of up to four remote controllers.

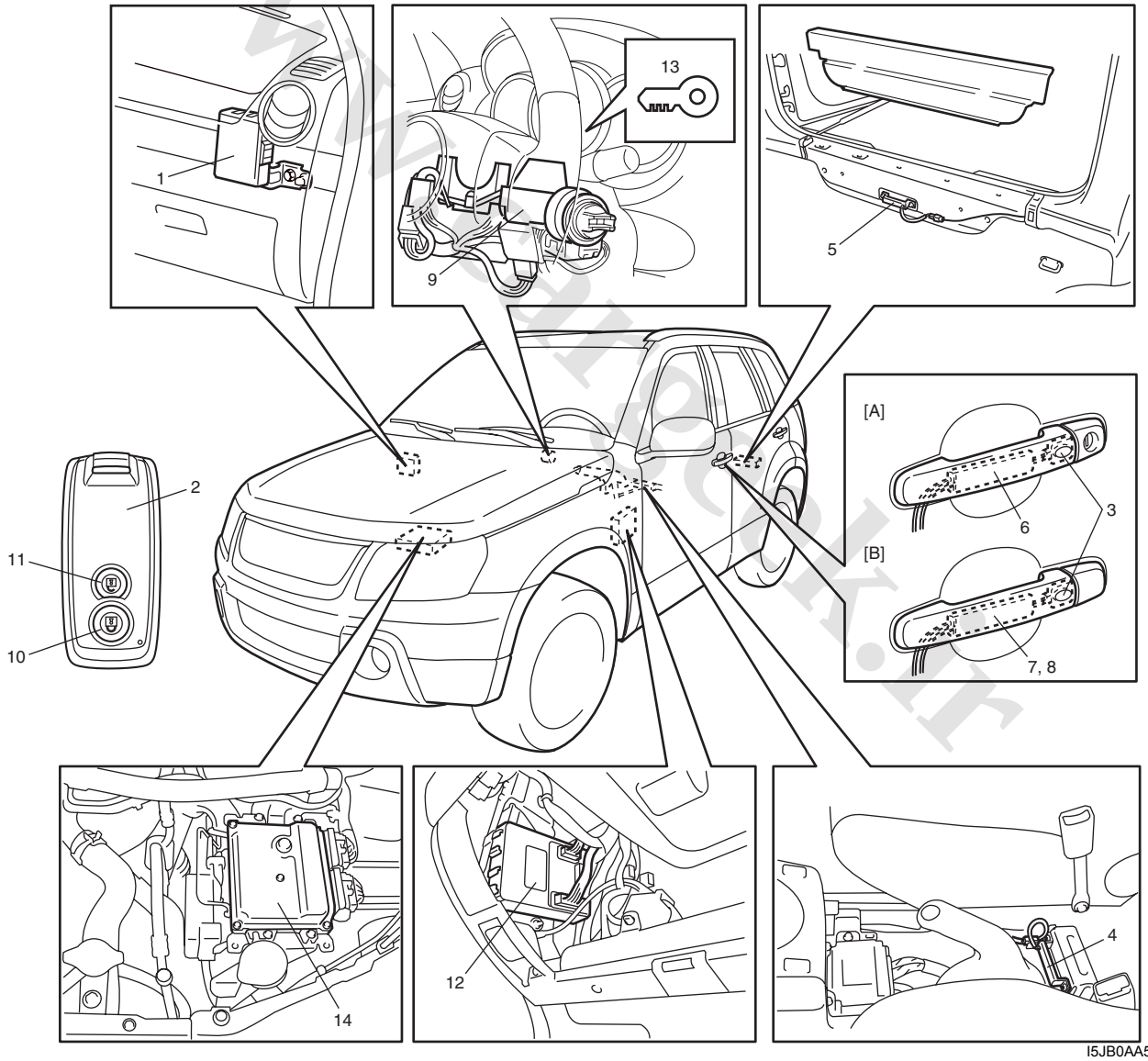


I5JB0AA50001-01

www.cargeek.ir

| | | |
|---|---|---|
| [A]: Driver side door outside handle | 5. Luggage room antenna | 11. Lock button |
| [B]: Passenger side or rear end door outside handle | 6. Driver side door antenna | 12. BCM |
| 1. Keyless start control module | 7. Passenger side door antenna | 13. Key indicator lamp |
| 2. Remote controller | 8. Rear end door antenna | 14. ECM |
| 3. Request switch | 9. Steering lock unit | |
| 4. Center antenna | 10. Unlock button | |

## Parts and Functions

S5JB0AA501002

| Parts | Function |
|---|---|
| Keyless start control module | • Activates each antenna<br>• Verifies ID code of remote controller<br>• Requests steering lock unit to release steering lock<br>• Requests BCM to lock or unlock doors<br>• Controls key indicator lamp in combination meter<br>• Transmits its ID code to ECM |
| Remote controller | • Receives request signal from each antenna<br>• Transmits ID code and request signal to keyless start control module<br>• Request keyless start control module to lock or unlock doors (keyless entry system function) |
| Request switch | • Requests keyless start control module to activate each antenna |
| Center antenna | • Transmits request signal to remote controller |
| Luggage room antenna | • Transmits request signal to remote controller |
| Driver side door antenna | • Transmits request signal to remote controller |
| Passenger side door antenna | • Transmits request signal to remote controller |
| Rear end door antenna | • Transmits request signal to remote controller |
| Steering lock unit | • Releases steering lock |
| Unlock button | • Transmits door unlock request signal (keyless entry system function) |
| Lock button | • Transmits door lock request signal (keyless entry system function) |
| BCM | • Controls each door lock actuator<br>• Controls warning buzzer<br>• Lights hazard warning lamp and interior (DOME) light (answer back) |
| Key indicator lamp | • Indicates operation state of keyless start system (indicates check result of remote controller ID code) |
| ECM | • Checks keyless start control module ID code<br>• Transmits its ID code to keyless start control module<br>• Starts engine |

www.CarGeek.ir

www.CarGeek.ir

## Keyless Engine Start Function

S5JB0AA501003

When the ignition knob switch (2) installed to the steering lock unit (1) is pushed, the keyless start control module (3) activates the center antenna (4) to send out the request signal in the vehicle compartment. When the remote controller (5) receives the request signal from the center antenna, it transmits the ID code to the keyless start control module. The keyless start control module compares the ID code sent by the remote controller with the ID code registered in the keyless start control module. When these ID codes match, the keyless start control module makes the key indicator lamp (7) in the combination meter (6) light in blue and unlocks the steering lock unit to enable the ignition knob switch to turn. When the ignition knob switch is turned to ON position in this state, ID codes of ECM and keyless start control module are compared through CAN communication (immobilizer function).
When they match, turning the ignition knob switch to start position will start the engine.

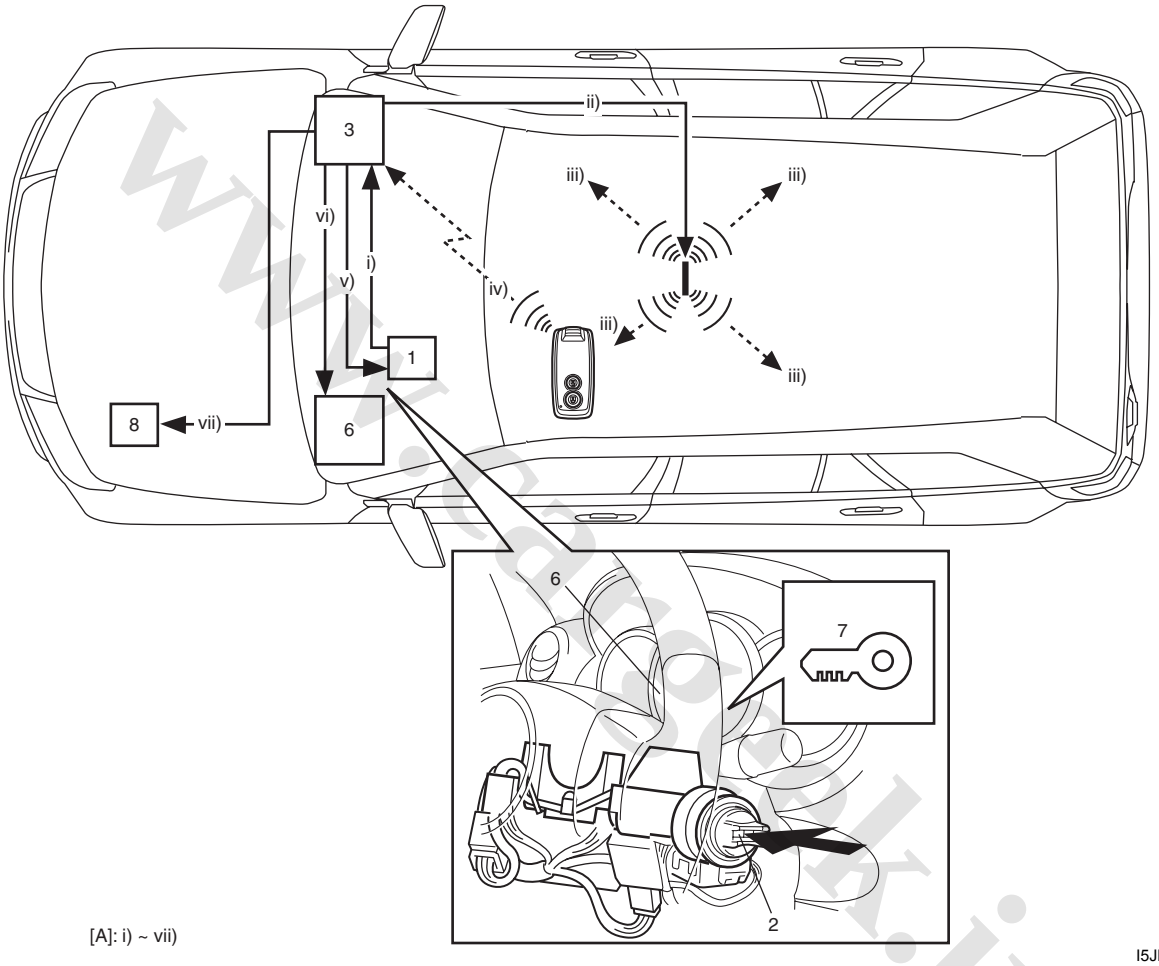


[A]: i) ~ vii)

I5JB0AA50002-01

| | |
|---|---|
| [A]: Signal flow | 8. ECM |

When the ID code from the remote controller and the ID code registered in the keyless start control module do not match or when the remote controller is outside the operation area of the remote controller and the ignition knob switch is pushed, the steering lock unit cannot be unlocked and so the ignition knob switch cannot be turned. Then, the keyless start control module makes the key indicator lamp in the combination meter light in red to warn the driver that it is not possible to turn the ignition knob switch. Also, when the ID code of ECM and that of the keyless start control module do not match, the engine cannot be started even if the ignition knob switch is turned to the start position. Then ECM makes the immobilizer lamp in the combination meter flash to warn the driver that it is not possible to start the engine.

www.cargeek.ir

## Door Lock Function of Keyless Start System

S5JB0AA501004

When the request switch (1) incorporated in the outside handle of the driver side door, front passenger side door or rear end door is pushed, the keyless start control module (2) activates the center antenna (3) and luggage room antenna (4) to send out the radio wave in the vehicle compartment to check if the remote controller (5) is in the vehicle compartment or not. When the keyless start control module receives no signal from the remote controller (i.e., the remote controller does not exist in the vehicle compartment), it activates the antenna (6) of the door of which the request switch has been pushed to send the request signal out of the compartment. If the remote controller exists within the door lock operation area, it receives the request signal sent from the above said antenna, sends the ID code of the remote controller and the request signal to the keyless start control module and at the same time, it makes the operation indicator lamp (7) of the remote controller light up. Lighting of the operation indicator lamp indicates that the remote controller sent the ID code and the request signal.
The keyless start control module compares the ID code sent from the remote controller with the ID code registered in the keyless start control module. If both ID codes match, the keyless start control module outputs the lock or unlock request signal (depending on the door lock switch (8) state then) to BCM (9). When BCM receives such signal through CAN communication from the keyless start control module, it activates the door lock actuator to lock or unlock doors.
When the keyless start control module receives a signal from the remote controller (i.e., the remote controller exists in the vehicle compartment), the function of the keyless start system to prevent the remote controller from being closed in the vehicle works and the keyless start control module sends a request signal to unlock doors to BCM. In this way, doors are kept unlocked.
Also, when the driver or passenger has left the vehicle with the remote controller left behind in the vehicle compartment and locked doors by using the door lock knob or manual door lock switch, the function to prevent the remote controller from being closed in the vehicle works to unlock doors.

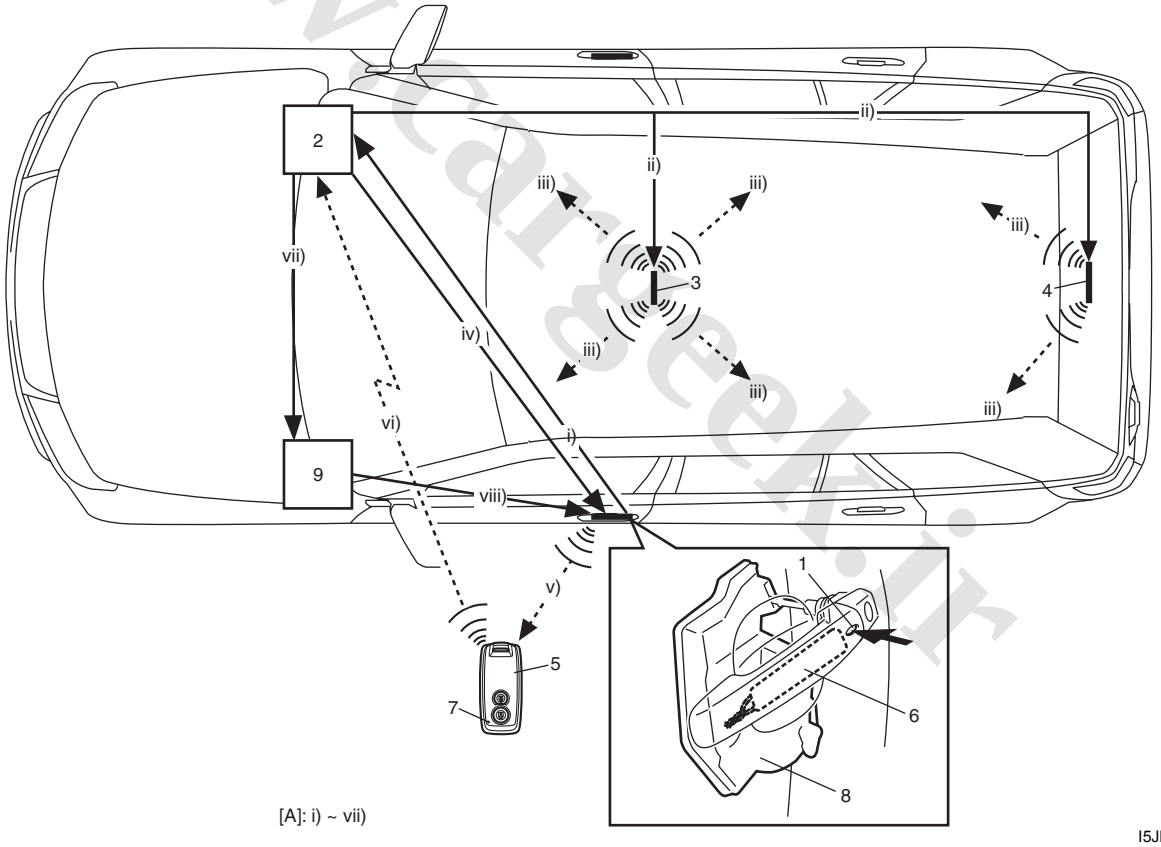


I5JB0AA50003-01

[A]: Signal flow

Furthermore, when ID codes of the remote controller and keyless start control module do not match or the remote controller exists outside of the operation area, doors are not locked or unlocked even if the request switch of the outside handle is operated.

www.CarGeek.ir

## Operation Area of Remote Controller

S5JB0AA501005

Shown below are the operation areas of the remote controller for the keyless engine start function and door lock function of the keyless start system.

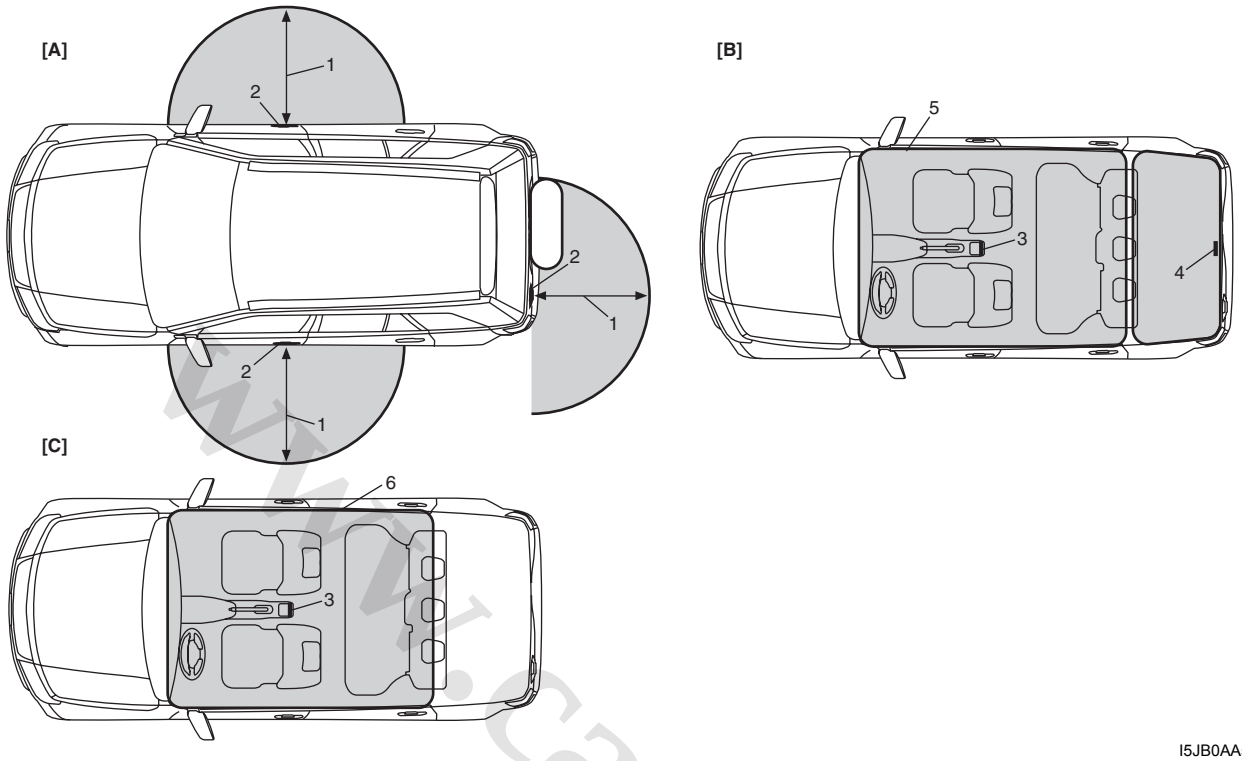


I5JB0AA50004-09

| | |
|---|---|
| [A]: Door lock function of keyless start system | 3. Center antenna |
| [B]: Function of keyless start system to prevent remote controller from being closed in vehicle compartment | 4. Luggage room antenna |
| [C]: Keyless engine start function<br>1. About 80 cm (3.15 in, 2.6 ft)<br>2. Each door antenna | 5. Vehicle compartment including luggage room<br>6. Vehicle compartment excluding luggage room |

However, even when the remote controller is within the operation area as shown above, there are cases where the keyless start system doesn't work under certain conditions as described below. And when the keyless engine start function doesn't work, the key indicator lamp in the combination meter may light up.

- Doors cannot be locked or unlocked using the door lock function of keyless start system when:
  - The remote controller which has been registered in the keyless start control module and another un-registered one are both carried at the same time
  - The remote controller is kept in some metallic container which disturb radio wave transmission/reception
  - One of doors is open
  - The ignition key is inserted in the ignition key cylinder
- The function of the keyless start system to prevent the remote controller from being closed in the vehicle compartment doesn't work when:
  - The remote controller is in the door pocket or in the glove box
  - The remote controller is kept in some metallic container which disturb radio wave transmission/reception
  - The remote controller is placed close to outside of the vehicle compartment (such as on the instrument panel beside the front window shield glass or in a corner of the luggage room)
- The ignition knob switch cannot be turned using the keyless engine start function fails to turn:
  - The remote controller which has been registered in the keyless start control module and another un-registered one are both carried at the same time
  - The remote controller is kept in some metallic container which disturbs radio wave transmission/reception
  - The ignition knob switch has been pushed for 5 seconds or longer
  - The remote controller is placed close to outside of the vehicle compartment (such as on the instrument panel beside the front window shield glass or in a corner of the luggage room)

www.cargeek.ir

www.CarGeek.ir


## Alarm Function

S5JB0AA501006

Under conditions as described in the table below, the keyless start control module makes the key indicator lamp flash in red and the buzzer sound to call the driver's attention.

| Condition | Buzzer operation | Key indicator lamp operation |
|---|---|---|
| Ignition knob switch has stopped between ACC and OFF positions while driver side door is opened (ignition knob switch un-returned alarm) | Intermittent | — |
| Ignition switch has stopped between ACC and OFF positions while driver side door is closed (ignition knob switch un-returned alarm) | 2 times | Flashing in red |
| Remote controller is carried out of vehicle and doors are closed while ignition switch is at ON position (remote controller carried-out alarm) | 3 times | Flashing in red |
| Remote controller is carried out of vehicle through a window without opening door while ignition switch is at ON position (engine is running) and vehicle has been driven at 10km/h (6 MPH) or more speed without remote controller in vehicle compartment (the first time 10 km/h (66 MPH) speed is exceeded only) (Remote controller carried-out alarm) | 3 times | Flashing in red |

## CAN Communication of Keyless Start System

S5JB0AA501007

Keyless start control module communicates with each control module (ECM, BCM and combination meter) about the following information. For details of CAN communication, refer to "CAN Communication System Description: in Section 1A".

- Data which keyless start control module receives from ECM
  - Vehicle speed signal
  - ECM-keyless start control module code
- Data which keyless start control module transmits to ECM
  - ID code of keyless start control module
  - ECM-keyless start control module code
- Data which keyless start control module receives from BCM
  - Door switch status
  - Door lock status
- Data which keyless start control module transmits to BCM
  - Ignition knob switch signal
  - Door lock/unlock request signal
  - Buzzer for keyless start system request signal
  - Answer back request signal
- Data which keyless start control module transmits to combination meter
  - Key indicator lamp control signal

www.cargeek.ir

www.CarGeek.ir

# Schematic and Routing Diagram

## Keyless Start System Electric Wiring Circuit Diagram

S5JB0AA502001

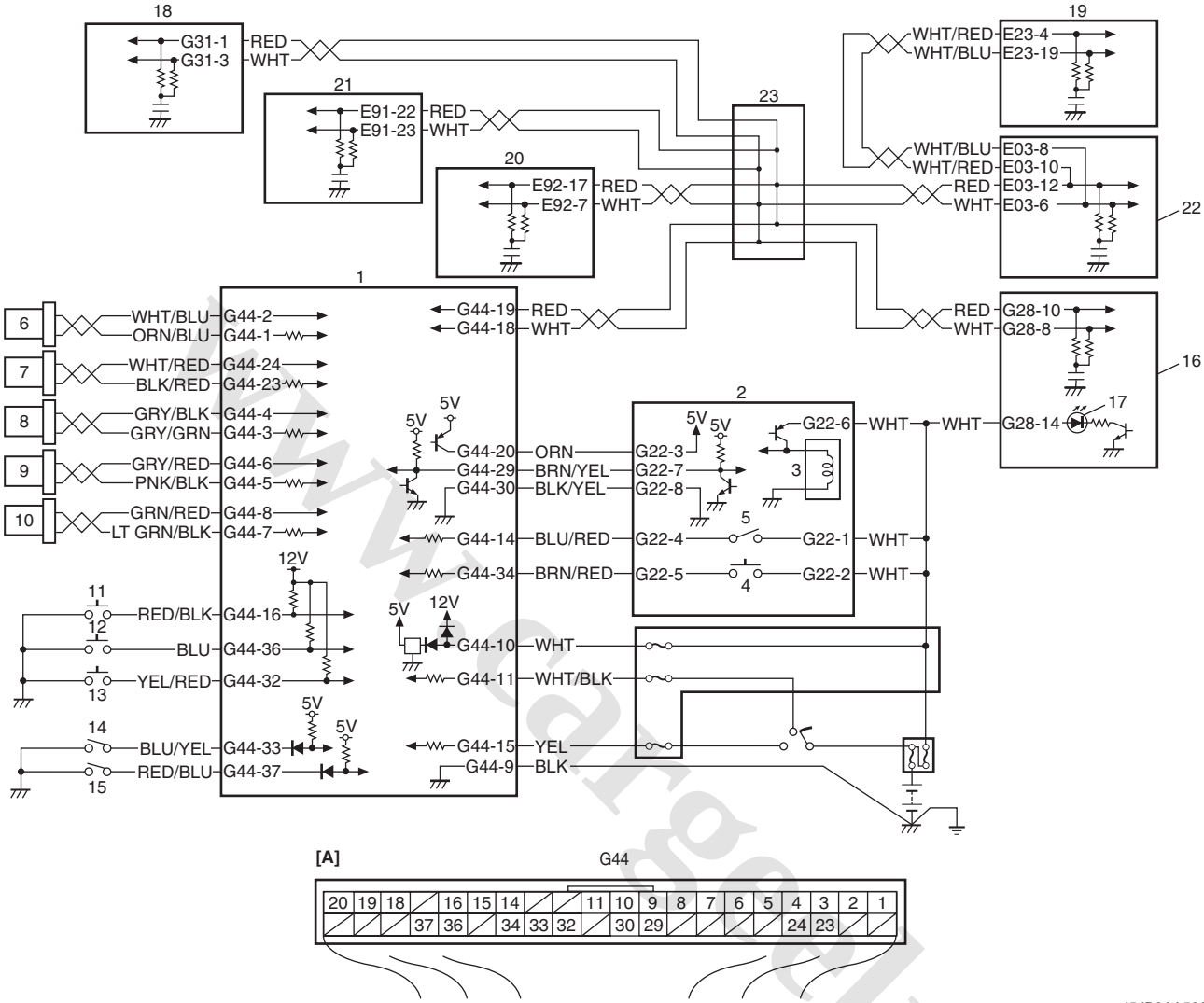


I5JB0AA50005-03

| | | |
|---|---|---|
| [A]: Keyless start control module connector (viewed from harness side) | 8. Rear end door antenna | 16. Combination meter |
| 1. Keyless start control unit | 9. Center antenna | 17. Key indicator lamp |
| 2. Steering Lock unit | 10. Luggage room antenna | 18. BCM |
| 3. Steering lock solenoid | 11. Driver side door request switch | 19. ECM |
| 4. Ignition knob switch | 12. Passenger side door request switch | 20. TCM (A/T model) |
| 5. Key reminder switch | 13. Rear end door request switch | 21. 4WD control module (if equipped) |
| 6. Driver side door antenna | 14. Driver side door lock switch | 22. ABS hydraulic unit / control module assembly (if equipped) |
| 7. Passenger side door antenna | 15. Passenger side door lock switch | 23. Junction connector |

www.cargeek.ir

www.CarGeek.ir


# Diagnostic Information and Procedures

## Precautions in Diagnosing Troubles

S5JB0AA504001

- The keyless start system executes data transmission/ reception by means of the radio wave. Therefore, proper operation may not be obtained if use of the door lock function and engine start function of the keyless start system is attempted near the place where strong radio wave is emitted (TV and radio broadcasting stations, etc.).
- Diagnostic information stored in keyless start control module memory can be checked only by key indicator lamp.
- Be sure to use the trouble diagnosis procedure as described in “Keyless Start System Check: ”. Failure to follow it may result in incorrect diagnosis. (Some other DTC may be stored by mistake in the memory of keyless start control module during inspection.)
- Be sure to read “Precautions for Electrical Circuit Service: in Section 00” before inspection and observe what is written there.
- Communication of ECM, BCM, TCM (A/T model), 4WD control module (if equipped), ABS hydraulic unit / control module assembly (if equipped), keyless start control module and combination meter, is established by CAN (Controller Area Network). (For detail of CAN communication for keyless start control module, refer to “CAN Communication of Keyless Start System: ”). Therefore, handle CAN communication line with care referring to “Precaution for CAN Communication System: in Section 00”.
- Replacement of the keyless start control module
  When keyless start control module is replaced with new one, make sure that register remote controller ID code to Keyless start control module correctly according to “Registration Procedure for Remote Controller ID Code: ”.
- Keyless start control module substitution
  When the keyless start control module used in another vehicle was installed in the vehicle, register the ID code of the remote controller in the keyless start control module as well as the ignition key transponder code for the immobilizer control system in ECM. For the registration procedure of the ignition key transponder code, refer to “Registration of the Ignition Key: in Section 10C”.

## Self-Diagnosis Function

S5JB0AA504002

The keyless start control module has self-diagnosis function to monitor the system components and circuits while the keyless start system is at work. When the keyless start control module detects an abnormality in the system, it saves the area where such abnormality has occurred as a DTC in its memory. The DTC stored in memory of the keyless start control module is indicated by the key indicator lamp in the combination meter flashing in a specific pattern. For DTC indication, refer to “DTC Check: ” and for the clearing procedure, to “DTC Clearance: ”.

## Keyless Start System Diagnosis Introduction

S5JB0AA504003

To ensure that the trouble diagnosis is done accurately and smoothly, observe “Precautions in Diagnosing Troubles: ” and follow “Keyless Start System Check: ”.

## Keyless Start System Check

S5JB0AA504004

| Step | Action | Yes | No |
|---|---|---|---|
| 1 | 1) Record details of the problem. For your record, use of a questionnaire form will facilitate collecting information for proper analysis and diagnosis.<br>2) Check if the problem described in “Customer questionnaire (example): ” actually occurs in the vehicle. (This step should be performed with the customer if possible.)<br>Perform “Keyless Start System Operation Inspection: ” procedure to check if the symptom which has occurred is abnormal or not.<br>3) Check for DTC referring to “DTC Check: ”, and then record DTC(s).<br>4) Clear DTC referring to “DTC Clearance: ” if any DTC exists, and then recheck for DTC.<br>*Is any DTC still detected?* | Go to Step 2. | Go to Step 3. |
| 2 | 1) Check and repair referring to applicable “DTC Table: ”.<br>*Are check and repair complete?* | Go to Step 5. | Check and repair malfunction part(s), and go to Step 5. |

www.cargeek.ir

 www.CarGeek.ir

| Step | Action | Yes | No |
|---|---|---|---|
| 3 | 1) Inspect and repair basic parts referring to “Keyless Start System Symptom Diagnosis: ”.<br>*Is there faulty condition?* | Repair or replace malfunction part(s), and go to Step 5. | Go to Step 4. |
| 4 | 1) Check for intermittent problems referring to “Intermittent and Poor Connection Inspection: in Section 00”.<br>*Is there any faulty condition?* | Repair or replace malfunction part(s), and go to Step 5. | Go to Step 5. |
| 5 | 1) Confirm if the problem is solved and the keyless start system is free from any abnormal conditions. If what has been repaired is related to the DTC, clear the DTC once and then confirm that no DTC is indicated.<br>*Is there any problem symptom, DTC or abnormal condition?* | Go to 2) of Step 1 and perform trouble diagnosis again. | End. |

**Customer questionnaire (example)**

S5JB0AA504005

| | | | |
|---|---|---|---|
| Customer’s name: | Model: | VIN: | |
| Date of issue: | Date Reg: | Date of problem: | Mileage: |

| | |
|---|---|
| Problem Symptoms | • Engine can not be started by turning Ignition knob switch<br>• All doors can not be locked / unlocked by all of request switches<br>• Other_____ |
| Frequency of Occurrence | • Continuous / Intermittent ( times a day, a month) / Other_____ |
| Environmental Condition | • Weather:<br>Fine / Cloudy / Rain / Snow / Other_____<br>• Temperature: ℃( ° F )<br>• Stopping near area where intense radio waves are emitted such as TV station, radio station, etc.<br>Yes / No |
| Diagnostic Trouble Code | • First check:<br>Normal code / malfunction code ( )<br>• Second check:<br>Normal code / malfunction code ( ) |

I4RS0BA50007-02

www.cargeek.ir

www.CarGeek.ir


## Key Indicator Lamp Check

S5JB0AA504006

Push the ignition knob switch (2) of the steering lock unit (1) and check that the key indicator lamp (3) in the combination meter lights up in red or blue. If it does not light, go to “Key Indicator Lamp Circuit Check (Key indicator lamp doesn’t light when ignition knob switch is pushed.): ”.

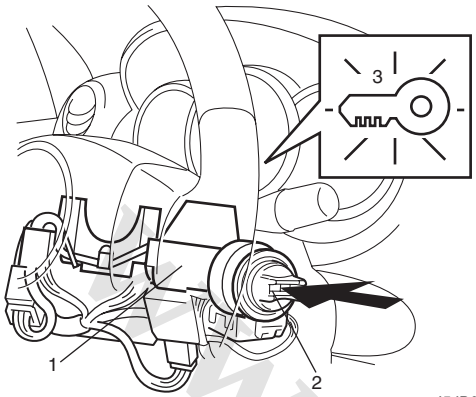


I5JB0AA50006-01

## DTC Check

S5JB0AA504007

1) Check to make sure that all doors are closed.
2) Open driver side door window glass and door.
3) Check to make sure that ignition key is not inserted in ignition key cylinder. If it is, remove it.
4) Perform “Key Indicator Lamp Check: ”.
5) Close driver side door and within 15 seconds after that, perform Steps a) through e) described below.
   a) Insert ignition key (1) in ignition key cylinder (2).
   b) Remove ignition key from ignition key cylinder.
   c) Repeat Steps a) and b) twice.
   d) Insert ignition key in ignition key cylinder.
   e) Push driver side door request switch (3) 4 times. At the end of Step e), buzzer sounds twice to inform that trouble diagnosis mode has started.

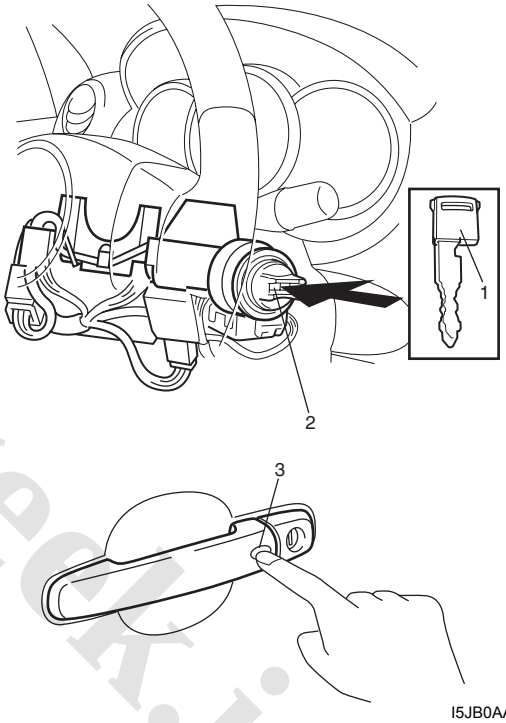


I5JB0AA50007-01

www.cargeek.ir

www.CarGeek.ir

6) Read flashing pattern of key indicator lamp (1) which represents DTC as shown in example below and write it down. When more than 2 DTCs are stored in memory, flashing for each DTC is repeated three times starting with the smallest DTC number in increasing order.

**NOTE**

**Go to "No DTC Detection After Performing DTC Check: " in case that any DTC is detected after performing the procedure mentioned above.**

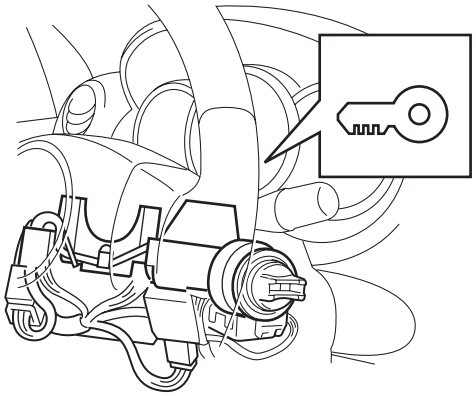

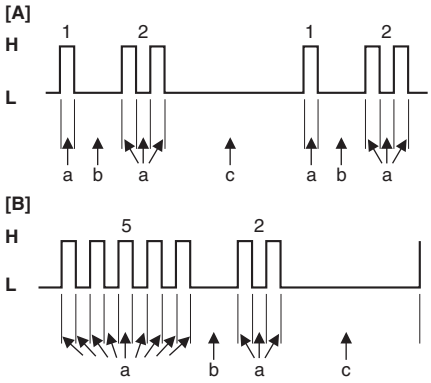


I5JB0AA50008-01

| | |
|---|---|
| [A]: DTC NO. 12 (Normal) | K: Key indicator lamp |
| [B]: DTC NO. 52 | a: 0.3 seconds |
| H: Key indicator lamp turned ON | b: 1.0 second |
| L: Key indicator lamp turned OFF | c: 3.0 seconds |

7) After completing the check, remove ignition key from ignition key cylinder.

## DTC Table

S5JB0AA504008

| DTC (Flashing pattern of key indicator lamp) | Detected parts item | Detecting condition |
|---|---|---|
| ☞ 11 | Communication Error With Steering Lock Unit | No communication is available between keyless start control module and steering lock unit |
| 12 | — | Normal (No malfunction DTC is detected) |
| ☞ 13 | Release Signal Error from Steering Lock Unit | Although lock release signal is output to steering lock unit, it is not inputted from steering lock unit |
| ☞ 14 | Steering Lock Unit Malfunction | Steering lock unit cannot be unlocked due to its temperature rise |
| ☞ 21 | Internal Error in Keyless Start Control Module (EEPROM Reading Error) | Data cannot be read from memory in keyless start control module |
| ☞ 22 | Internal Error in Keyless Start Control Module (EEPROM Writing Error) | Data cannot be written into memory in keyless start control module |
| ☞ 31 | Lost Communication With BCM | Keyless start control module cannot receive data sent by CAN from BCM |
| ☞ 33 | Control Module Communication Bus Off | No communication is available with all control modules connected by CAN |
| ☞ 51 | Driver Side Door Request Switch Malfunction | Input signal from driver side door request switch remains ON, unchanged |
| ☞ 52 | Passenger Side Door Request Switch Malfunction | Input signal from passenger side door request switch remains ON, unchanged |
| ☞ 53 | Rear end Door Request Switch Malfunction | Input signal from rear end door request switch remains ON, unchanged |

www.cargeek.ir

www.CarGeek.ir


## DTC Clearance

S5JB0AA504009

1) Perform Steps 1) through 5) of DTC check procedure and have DTC indicated.
2) Open driver side door.
3) Close driver side door and within 10 seconds after that, perform Steps a) to c) described below.
   a) Push unlock side (3) of driver side manual door lock switch (1).
   b) Push lock side (2) of driver side manual door lock switch.
   c) Repeat Steps a) and b) 3 times.
   At the end of Step c), DTCs are cleared and key indicator lamp indicates DTC No. 12 (Normal).

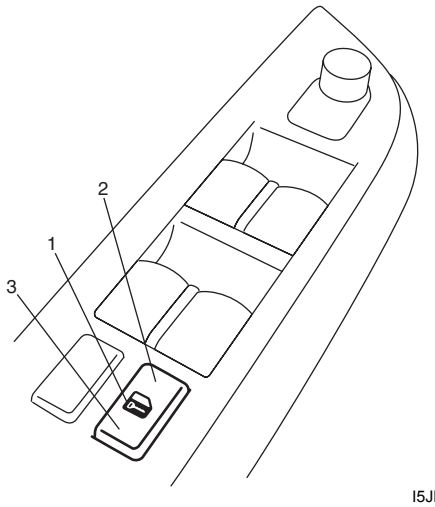


I5JB0AA50009-02

4) After completing DTC clearance, remove ignition key from ignition key cylinder.

## Keyless Start System Symptom Diagnosis

S5JB0AA504010

### Door Lock Function of Keyless Start System

**NOTE**

**Before performing trouble diagnosis procedure for door lock function of keyless start system, check that power door lock system operates properly referring to "Power Door Lock System Operation Inspection: in Section 9F". If power door lock system does not operate properly, go to "Power Door Lock System Symptom Diagnosis: in Section 9F".**

| Condition | Possible cause | Correction / Reference Item |
|---|---|---|
| ***All doors can not be locked / unlocked by all of door request switches*** | Circuit fuse(s) blown | *Replace fuse(s) and check for short circuit.* |
| | Remote controller battery dead | *Replace battery.* |
| | Remote controller faulty | *Check remote controller for operation referring to "Remote Controller Inspection: ".* |
| | Wiring or grounding faulty | *Repair circuit.* |
| | Antennas or keyless start control module faulty | *Check input and output signals of Keyless start control module referring to "Inspection of Keyless Start Control Module and Its Circuits: ".* |
| | BCM faulty | *Check input and output signal of BCM referring to "Inspection of BCM and its Circuits: in Section 10B".* |
| ***All doors can not be locked / unlocked by any one of door request switch*** | Request switch faulty | *Check request switch for operation referring to "Front Door (Driver and Passenger Side) Rear End Door Request Switch Inspection: ".* |
| | Wiring or grounding faulty | *Repair circuit.* |
| | Antennas or Keyless start control module faulty | *Check input and output signals of Keyless start control module referring to "Inspection of Keyless Start Control Module and Its Circuits: ".* |
| | BCM faulty | *Check input and output signal of BCM referring to "Inspection of BCM and its Circuits: in Section 10B".* |

www.cargeek.ir

 www.CarGeek.ir

### Keyless Engine Start Function

**NOTE**

**Before performing symptom diagnosis procedure for keyless engine start system, check that engine starts by using ignition key. If it cannot be started by using ignition key, go to "Engine Symptom Diagnosis: in Section 1A".**

| Condition | Possible cause | Correction / Reference Item |
|---|---|---|
| ***Engine can not be started by turning Ignition knob switch*** | Circuit fuse(s) blown | *Replace fuse(s) and check for short circuit.* |
| | Remote controller battery dead | *Replace battery.* |
| | Remote controller faulty | *Check remote controller for operation referring to "Remote Controller Inspection: ".* |
| | Steering lock unit faulty | *Check steering lock unit for operation referring to "Steering Lock Unit Inspection: ".* |
| | Wiring or grounding faulty | *Repair circuit.* |
| | Antennas or Keyless start control module faulty | *Check input and output signals of Keyless start control module referring to "Inspection of Keyless Start Control Module and Its Circuits: ".* |
| | ECM faulty | *Check input and output signal of ECM referring to "Inspection of ECM and Its Circuits: in Section 1A".* |

## Keyless Start System Operation Inspection

S5JB0AA504011

### Keyless engine start operation

1) Sit in driver seat with remote controller carried with you.
2) Check that all doors are closed and ignition key is not inserted in ignition key cylinder.
3) While pushing ignition knob switch (1) of steering lock unit, check if ignition knob switch can be turned from its lock position.
   If key indicator lamp (2) in combination meter lights in blue and ignition knob switch can be turned from its lock position in this check, keyless engine start operation is in good condition.
   If key indicator lamp in combination meter lights in red and ignition knob switch cannot be turned from its lock position in this check, go to "Keyless Start System Check: ".

**NOTE**

**Pushing ignition knob switch for 5 seconds or longer causes function to protect steering lock releasing solenoid against heat to work. Then steering lock unit stops energizing solenoid, preventing ignition knob switch from turning. At the same time, key indicator lamp in combination meter turns off. In such case, take your hand off from ignition knob switch once and operate it again.**

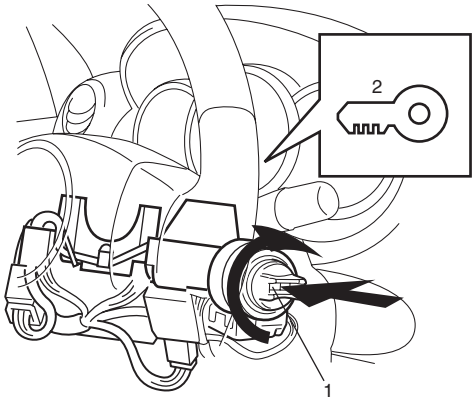


I5JB0AA50010-01

www.cargeek.ir

www.CarGeek.ir


## Door Lock Operation (Keyless Start System)

S5JB0AA504012

1) Check that all door locks are released and all doors are closed.
2) With remote controller of which ID code is registered in keyless start control module carried with yourself, check that pushing driver door request switch once locks all doors.
3) Check that pushing request switch of driver door, passenger door or rear end door once releases corresponding door lock.
4) Check that pushing again request switch pushed in Step 3) releases all door locks.

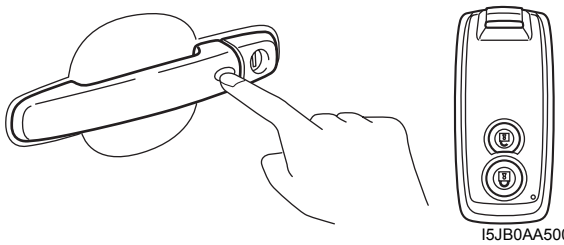

I5JB0AA50011-01

**NOTE**

**If door of which request switch has been pushed is opened/closed before performing Step 4), all door locks will not be released even when Step 4) is performed. If Step 4) is performed after door is opened/closed, only the door of which request switch was pushed will be locked.**

## Inspection of Keyless Start Control Module and Its Circuits

S5JB0AA504013

Keyless start control module and its circuits can be checked at keyless start control module wiring couplers by measuring voltage and resistance.

**⚠ CAUTION**

**Keyless start control module cannot be checked by itself. It is strictly prohibited to connect voltmeter or ohmmeter to keyless start control module with coupler disconnected from it.**

### Voltage Check

1) Disconnect negative cable (–) at battery.
2) Remove keyless start control module from vehicle body referring to “Keyless start control module Removal and Installation: ”.
3) Connect connector to keyless start control module.
4) Check voltage at each terminal number of couplers connected.

**NOTE**

- **As each terminal voltage is affected by the battery voltage, confirm that it is 11 V or more when ignition switch is ON.**
- **Voltage with asterisk (*) cannot be measured by voltmeter because it is pulse signal.**

www.cargeek.ir

www.CarGeek.ir

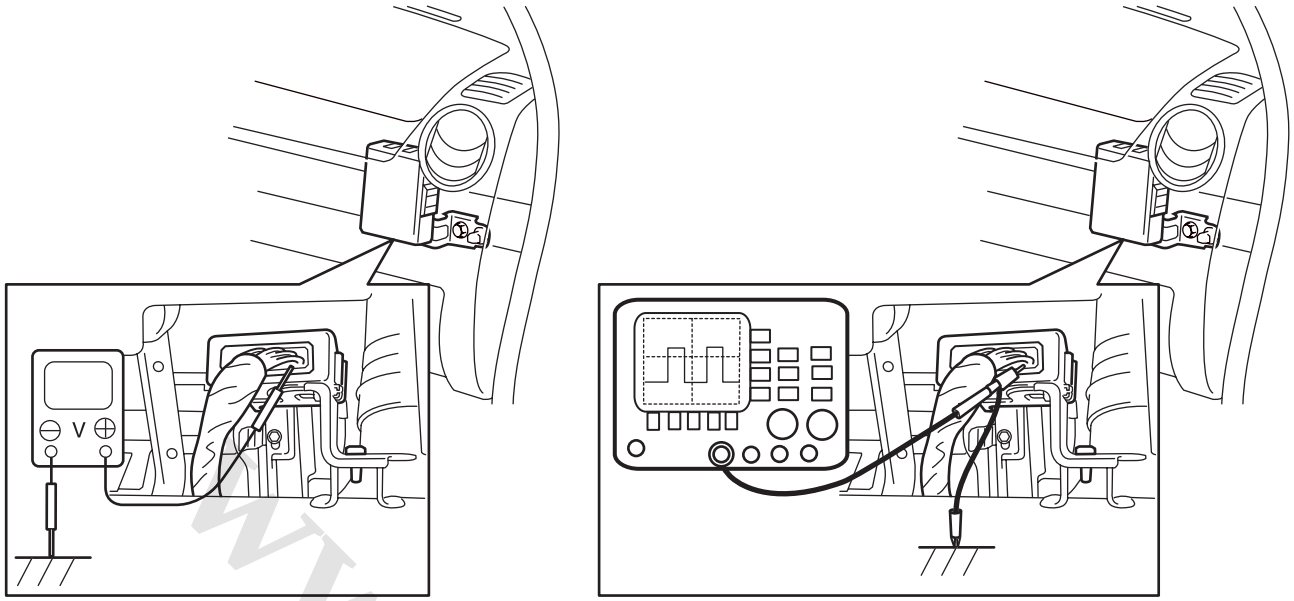


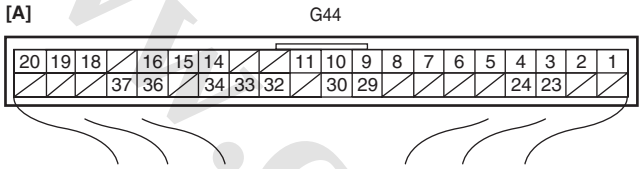


I5JB0AA50012-02

[A]: Keyless start control module connector (viewed from harness side)

| Terminal Number | Circuit | Normal Voltage | Condition |
|---|---|---|---|
| G44-1 | Driver side door antenna (–) | Refer to “Reference waveform No. 1: ” | |
| G44-2 | Driver side door antenna (+) | | |
| G44-3 | Rear end door antenna (–) | Refer to “Reference waveform No. 1: ” | |
| G44-4 | Rear end door antenna (+) | | |
| G44-5 | Center antenna (–) | Refer to “Reference waveform No. 2: ” | |
| G44-6 | Center antenna (+) | | |
| G44-7 | Luggage antenna (–) | Refer to “Reference waveform No. 3: ” | |
| G44-8 | Luggage antenna (+) | | |
| G44-9 | Ground for keyless start control module | 0 – 1 V | Ignition switch is at all positions |
| G44-10 | Power source | 10 – 12 V | Ignition switch is at all positions |
| G44-11 | Ignition switch (ACC signal) | 10 – 12 V | Ignition switch is at ACC or ON position |
| | | 0 – 1 V | Ignition switch is at any position other than ACC or ON position |
| G44-12 | — | — | — |
| G44-13 | — | — | — |
| G44-14 | Ignition switch (Key reminder signal) | 10 – 12 V | Insert ignition key to ignition key cylinder |
| | | 0 – 1 V | Pull out ignition key from ignition key cylinder |
| G44-15 | Ignition switch (ON signal) | 10 – 12 V | Ignition switch is at ON position |
| | | 0 – 1 V | Ignition switch is at any position other than ON position |
| G44-16 | Driver side door request switch | 10 – 12 V | Request switch of driver side door is released |
| | | 0 – 1 V | Request switch of driver side door is pushed |
| G44-17 | — | — | — |

www.cargeek.ir

www.CarGeek.ir


| Terminal Number | Circuit | Normal Voltage | Condition |
|---|---|---|---|
| G44-18 | CAN communication line (low) for combination meter | Refer to “Reference waveform No. 4: ” | |
| G44-19 | CAN communication line (high) for combination meter | | |
| G44-20 | Power supply for steering lock unit | 4 – 6 V | Full time |
| G44-21 | — | — | — |
| G44-22 | — | — | — |
| G44-23 | Passenger side door antenna (–) | Refer to “Reference waveform No. 1: ” | |
| G44-24 | Passenger side door antenna (+) | | |
| G44-25 | — | — | — |
| G44-26 | — | — | — |
| G44-27 | — | — | — |
| G44-28 | — | — | — |
| G44-29 | Signal for steering lock unit | 4 – 6 V | Ignition knob switch is at any position other than ON and OFF position |
| | | Refer to “Reference waveform No. 5: ” | |
| G44-30 | Ground for steering lock unit | 0 – 1 V | Full time |
| G44-31 | — | — | — |
| G44-32 | Rear end door request switch | 10 – 12 V | Request switch of rear end door is at any position other than ON position |
| | | 0 – 1 V | Request switch of rear end door is at ON position |
| G44-33 | Driver side door lock switch | Refer to “Reference waveform No. 6: ” | |
| G44-34 | Ignition knob switch | 10 – 12 V | When pushing ignition knob switch of steering lock unit |
| | | 0 – 1 V | When releasing ignition knob switch of steering lock unit |
| G44-35 | — | — | — |
| G44-36 | Passenger side door request switch | 10 – 12 V | Request switch of passenger side door is at any position other than ON position |
| | | 0 – 1 V | Request switch of passenger side door is at ON position |
| G44-37 | Passenger side door lock switch | Refer to “Reference waveform No. 6: ” | |
| G44-38 | — | — | — |
| G44-39 | — | — | — |
| G44-40 | — | — | — |

**Reference waveform No. 1**

Driver, passenger and rear end door antenna request signals (Request signal (1) transmitted by each door antenna when each door request switch is pushed)

| | |
|---|---|
| Measurement terminal | Driver side door antenna<br>• CH1: “G44-2” to “G44-9”<br>• CH2: “G44-1” to “G44-9”<br>Passenger side door antenna<br>• CH1: “G44-24” to “G44-9”<br>• CH2: “G44-23” to “G44-9”<br>Rear end door antenna<br>• CH1: “G44-4” to “G44-9”<br>• CH2: “G44-3” to “G44-9” |
| Oscilloscope setting | CH1: 5 V/DIV, CH2: 5 V/DIV<br>TIME: 40 ms/DIV |
| Measurement condition | Request switch of each door is pushed with remote controller carried |

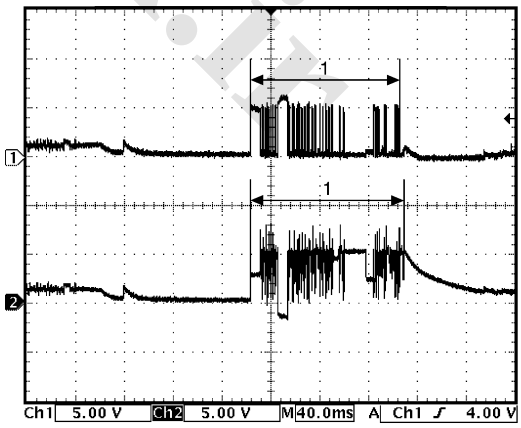


I4RS0BA50015-02

www.cargeek.ir

www.CarGeek.ir

**Reference waveform No. 2**
Center antenna signal
(Request signal (1) transmitted by center antenna when each door request switch is pushed)

| | |
|---|---|
| Measurement terminal<br>Oscilloscope setting | CH1: “G44-6” to “G44-9”<br>CH2: “G44-5” to “G44-9”<br>CH1: 10 V/DIV, CH2: 2 V/DIV<br>TIME: 20 ms/DIV |
| Measurement condition | • Ignition knob switch of steering lock unit is pushed<br>• Request switch of each door is pushed with remote controller carried |

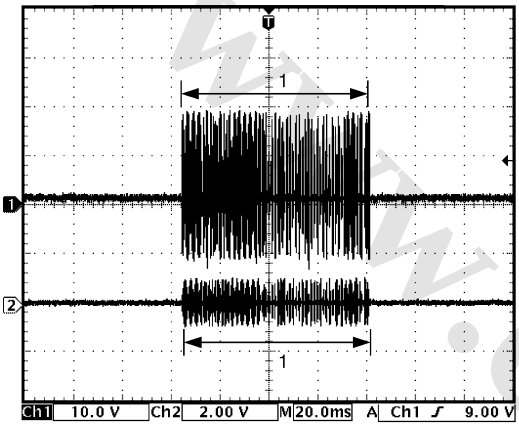

I5JB0AA50024-03

**Reference waveform No. 3**
Luggage room antenna signal
(Request signal (1) transmitted by luggage room antenna when each door request switch is pushed)

| | |
|---|---|
| Measurement terminal | CH1: “G44-8” to “G44-9”<br>CH2: “G44-7” to “G44-9” |
| Oscilloscope setting | CH1: 10 V/DIV, CH2: 10 V/DIV<br>TIME: 20 ms/DIV |
| Measurement condition | Request switch of each door is pushed with remote controller carried |

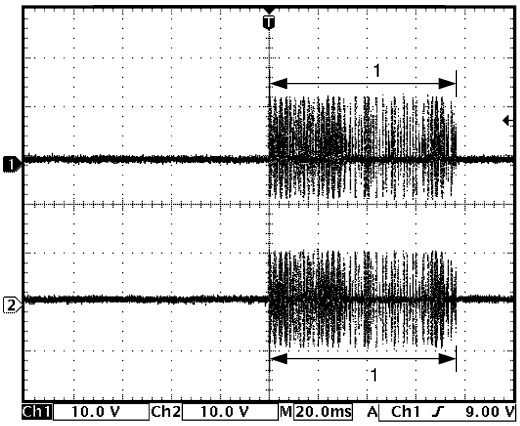

I5JB0AA50025-02

**Reference waveform No. 4**
CAN communication signals for combination meter
(CAN signal communicated between keyless start control module and combination meter when ignition switch is turned ON)

| | |
|---|---|
| Measurement terminal<br>Oscilloscope setting | CH1: “G44-19” to “G44-9”<br>CH2: “G44-18” to “G44-9”<br>CH1: 1 V/DIV, CH2: 1 V/DIV<br>TIME: 40 μs/DIV |
| Measurement condition | Ignition switch is at ON position |

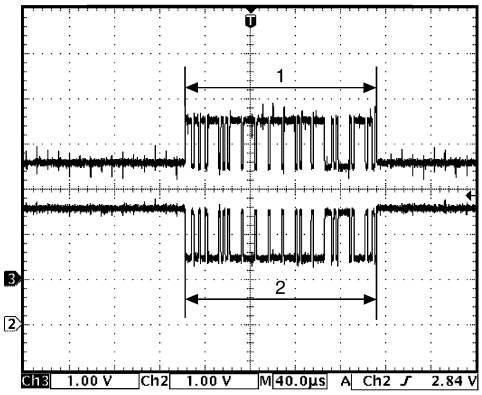

I4RS0BA50018-02

1. CAN communication line signal (high)
2. CAN communication line signal (low)

**Reference waveform No. 5**
Steering lock unit signal
(Signal (1) communicated between keyless start control module and steering lock unit when measurement condition described below applies)

| | |
|---|---|
| Measurement terminal | CH1: “G44-29” to “G44-9” |
| Oscilloscope setting | CH1: 2 V/DIV<br>TIME: 10 ms/DIV |
| Measurement condition | • Ignition knob switch of steering lock unit is pushed<br>• Request switch of each door is pushed with remote controller carried |

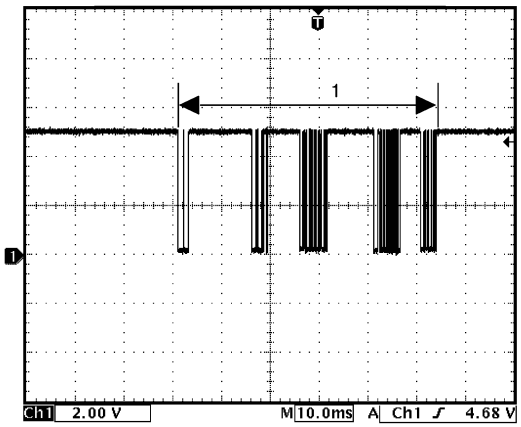

I5JB0AA50026-02

www.cargeek.ir

www.CarGeek.ir


**Reference waveform No. 6**

Driver and passenger side door lock switch signals.
(This signal indicates door lock status.)
In case the position of driver and passenger side door lock is changed from the unlock to the lock.

| | |
|---|---|
| Measurement terminal | Driver side door lock switch<br>• CH1: “G42-33” to “G42-9”<br>Passenger side door lock switch<br>• CH2: “G42-37” to “G42-9” |
| Oscilloscope setting<br><br>Measurement condition | CH1: 2 V/DIV CH2: 2 V/DIV<br>TIME: 1 s/DIV<br>Press lock side of manual door lock switch |

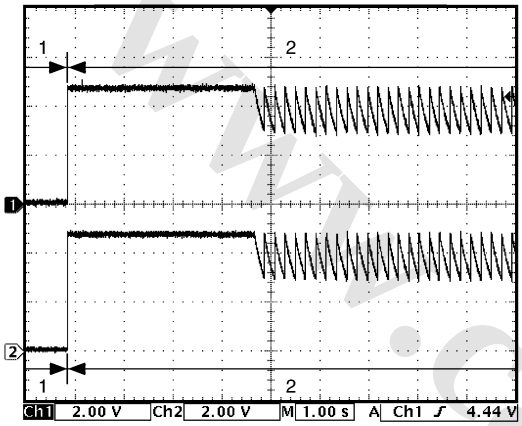

I5JB0AA50027-02

| | |
|---|---|
| 1. Unlock signal | 2. Lock signal |

In case the position of passenger side door lock is changed from the lock to the unlock when the position of driver and passenger side door is at the lock

| | |
|---|---|
| Measurement terminal | Driver side door lock switch<br>• CH1: “G42-33” to “G42-9”<br>Passenger side door lock switch<br>• CH2: “G42-37” to “G42-9” |
| Oscilloscope setting<br><br>Measurement condition | CH1: 2 V/DIV CH2: 2 V/DIV<br>TIME: 400 ms/DIV<br>Driver door is at lock position and passenger side door is at unlock position |

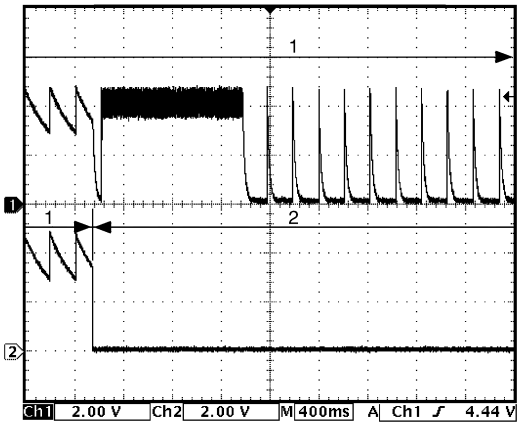

I5JB0AA50028-02

| | |
|---|---|
| 1. Lock signal | 2. Unlock signal |

In case the position of driver side door lock is changed from the lock to the unlock when the position of driver and passenger side door is at the lock.

| | |
|---|---|
| Measurement terminal | Driver side door lock switch<br>• CH1: “G42-33” to “G42-9”<br>Passenger side door lock switch<br>• CH2: “G42-37” to “G42-9” |
| Oscilloscope setting<br><br>Measurement condition | CH1: 2 V/DIV CH2: 2 V/DIV<br>TIME: 400 ms/DIV<br>Driver door is at unlock position and passenger side door is at lock position |

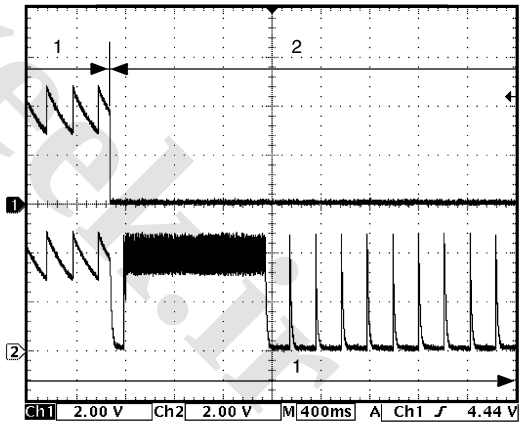

I5JB0AA50029-02

| | |
|---|---|
| 1. Lock signal | 2. Unlock signal |

www.cargeek.ir

www.CarGeek.ir

In case the position of driver and passenger side door lock is changed from the lock to the unlock.

| | |
|---|---|
| Measurement terminal | Driver side door lock switch<br>• CH1: “G42-33” to “G42-9”<br>Passenger side door lock switch<br>• CH2: “G42-37” to “G42-9” |
| Oscilloscope setting<br><br>Measurement condition | CH1: 2 V/DIV CH2: 2 V/DIV<br>TIME: 400 ms/DIV<br>Driver door is at unlock position and passenger side door is at lock position |

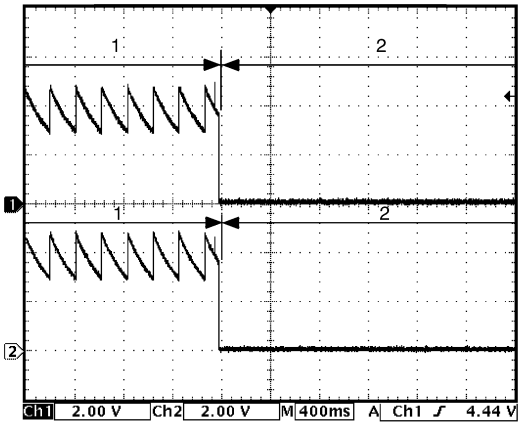


I5JB0AA50030-03

| | |
|---|---|
| 1. Lock signal | 2. Unlock signal |

## No DTC Detection After Performing DTC Check

S5JB0AA504022

### Wiring Diagram

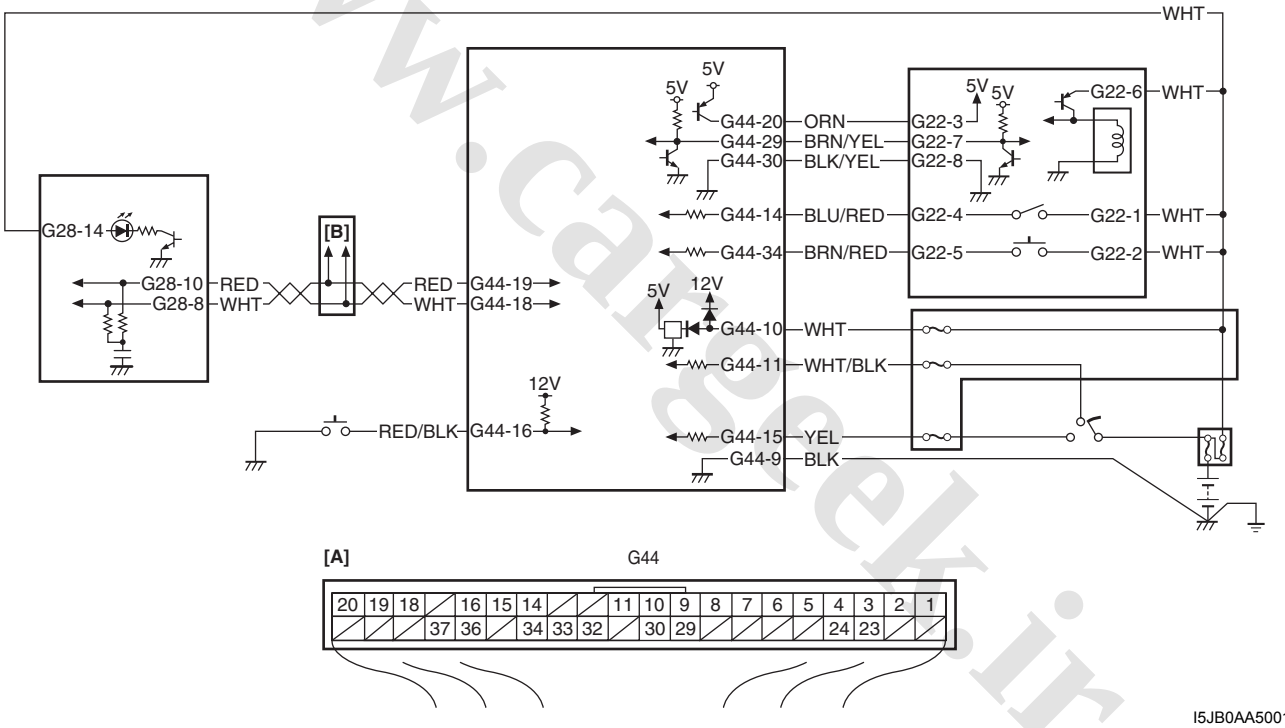


I5JB0AA50013-03

| | | |
|---|---|---|
| [A]: Keyless start control module connector (viewed from harness side) | 3. Steering lock solenoid | 7. Combination meter |
| [B]: To each control module | 4. Ignition knob switch | 8. Key indicator lamp |
| 1. Keyless start control module | 5. Key reminder switch | 9. Junction box |
| 2. Steering lock unit | 6. Driver side door request switch | 10. Junction connector |

www.cargeek.ir

www.CarGeek.ir


**Description**

The keyless start control module detects DTC by using signals from the key reminder and driver side door request switches. The keyless start control module makes the key indicator lamp in the combination meter flash on and off by using CAN communication.

**Troubleshooting**

| Step | Action | Yes | No |
|---|---|---|---|
| 1 | **Combination meter power and ground circuit check**<br>1) Turn ignition switch to ON position.<br>*Do warning lamps in combination meter other than key indicator lamp light up?* | Go to Step 2. | Check main fuse, circuit fuse, combination meter power and ground circuit. |
| 2 | **Driver side door request switch and its circuit check**<br>1) Check driver side door request switch and its circuit referring to “DTC No. 51 / No. 52 / No. 53: Driver Side / Passenger Side / Rear End Door Request Switch Failure: ”.<br>*Is it in good condition?* | Go to Step 3. | Repair or replace malfunction part. |
| 3 | **Key reminder switch and its circuit check**<br>1) Turn ignition switch to OFF position.<br>2) Disconnect connector from ignition switch.<br>3) Check key reminder switch for operation referring to “Ignition Switch Inspection: in Section 9C”.<br>4) If OK, check for open, short and high resistance in key reminder switch circuit.<br>*Is it in good condition?* | Go to Step 4. | Repair or replace malfunction part. |
| 4 | **Keyless start control module power supply and ground circuit**<br>1) Check keyless start control module power and ground circuit for condition referring to “Keyless Start Control Module Power and Ground Circuit Check: ”.<br>*Is it in good condition?* | Go to Step 5. | Repair circuit. |
| 5 | **CAN communication circuit check**<br>1) Turn ignition switch to OFF position.<br>2) Disconnect connectors of all control modules communicating by means of CAN.<br>3) Check CAN communication circuit between control modules for open, short and high resistance.<br>*Is each CAN communication circuit in good condition?* | Substitute a known-good keyless start control module and recheck. | Repair circuit. |

www.cargeek.ir

 www.CarGeek.ir

## Key Indicator Lamp Circuit Check (Key indicator lamp doesn't light when ignition knob switch is pushed.)

S5JB0AA504014

### Wiring Diagram

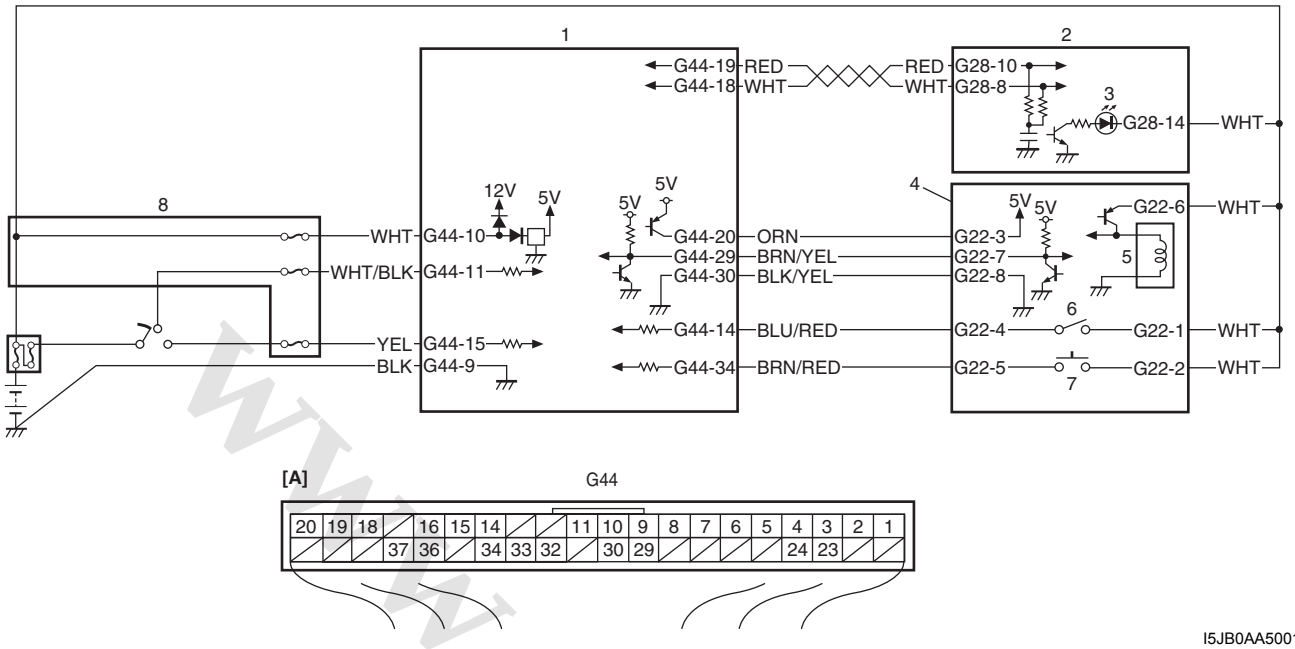


I5JB0AA50014-03

| | | |
|---|---|---|
| [A]: Keyless start control module connector (viewed from harness side) | 3. Key indicator lamp | 6. Key reminder switch |
| 1. Keyless start control module | 4. Steering lock unit | 7. Ignition knob switch |
| 2. Combination meter | 5. Steering lock solenoid | 8. Junction block |

### Description

When the ignition knob switch is pushed, the key indicator lamp lights up in blue if you carry the remote controller registered in the keyless start control module and it lights in red if you carry the remote controller which has not been registered in the keyless start control module or if you carry no remote controller.

### Troubleshooting

| Step | Action | Yes | No |
|---|---|---|---|
| 1 | **Combination meter power and ground circuit check**<br>1) Turn ignition switch to ON position.<br>*Do warning lamps in combination meter other than key indicator lamp light up?* | Go to Step 2. | Check main fuse, circuit fuse, combination meter power and ground circuit. |
| 2 | **Keyless start control module power and ground circuit check**<br>1) Check keyless start control module power and ground circuit for condition referring to "Keyless Start Control Module Power and Ground Circuit Check: ".<br>*Is it in good condition?* | Go to Step 3. | Repair circuit. |
| 3 | **Steering lock unit ignition knob switch check**<br>1) Check ignition knob switch of steering lock unit for operation referring to "Steering Lock Unit Inspection: ".<br>*Is it in good condition?* | Go to Step 4. | Replace steering lock unit. |

www.cargeek.ir

www.CarGeek.ir


| Step | Action | Yes | No |
|---|---|---|---|
| 4 | **Wire harness check**<br>1) Turn ignition switch to OFF position.<br>2) Disconnect connector from keyless start control module, steering lock unit and combination meter.<br>3) Check for open, short and high resistance in.<br>• Between “G22-5” terminal of steering lock unit connector and “G44-34” terminal of keyless start control module connector<br>• Between “G28-10” terminal of combination meter connector and “G44-19” terminal of keyless start control module connector<br>• Between “G28-8” terminal of combination meter connector and “G44-18” terminal of keyless start control module connector<br>*Is it in good condition?* | Go to Step 5. | Repair circuit. |
| 5 | **Keyless start system operation check**<br>1) With remote controller of which ID code is registered in keyless start control module carried with you, try to turn ignition knob switch.<br>*Can it be turned to any position other than “LOCK” position?* | Replace combination meter. | Substitute a known-good keyless start control module and recheck. |

## Keyless Start Control Module Power and Ground Circuit Check

S5JB0AA504015

### Wiring Diagram

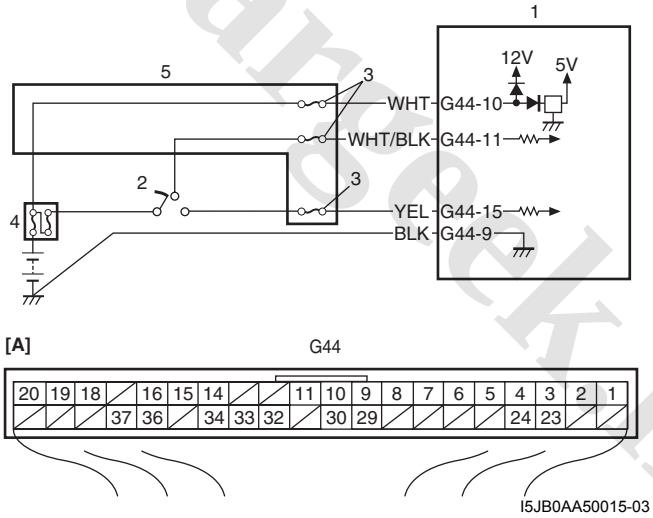


| | | |
|---|---|---|
| [A]: Keyless start control module connector (viewed from harness side) | 2. Ignition switch | 4. Main fuse |
| 1. Keyless start control module | 3. Circuit fuse | 5. Junction block |

www.cargeek.ir

 www.CarGeek.ir

### Troubleshooting

| Step | Action | Yes | No |
|---|---|---|---|
| 1 | **Fuse check**<br>1) Turn ignition switch to OFF position.<br>2) Check circuit fuse and main fuse for condition.<br>*Are fuses in good condition?* | Go to Step 2. | Replace fuse(s) and check for short. |
| 2 | **Power supply circuit check**<br>1) Disconnect connector from keyless start control module.<br>2) Check for proper connection to “G44-10”, “G44-11” and “G44-15” terminals of keyless start control module connector.<br>3) If OK, measure voltage between the following terminals.<br>• When ignition switch is at OFF position<br>Between “G44-10” terminal of keyless start control module connector and vehicle body ground: 10 – 14 V<br>• When ignition switch is at ACC position<br>Between “G44-11” terminal of keyless start control module connector and vehicle body ground: 10 – 14 V<br>• When ignition switch is at ON position<br>Between “G44-15” terminal of keyless start control module connector and vehicle body ground: 10 – 14 V<br>*Is check result satisfactory?* | Go to Step 3. | Repair power supply circuit. |
| 3 | **Ground circuit check**<br>1) Check for proper connection to “G44-9” terminal of keyless start control module connector.<br>2) If OK, measure resistance between “G44-9” terminal of keyless start control module connector and vehicle body ground.<br>*Is resistance 1 Ω or less?* | Power and ground circuit is in good condition. | Repair ground circuit. |

## DTC No. 11: Communication Error with Steering Lock Unit

S5JB0AA504016

### Wiring Diagram

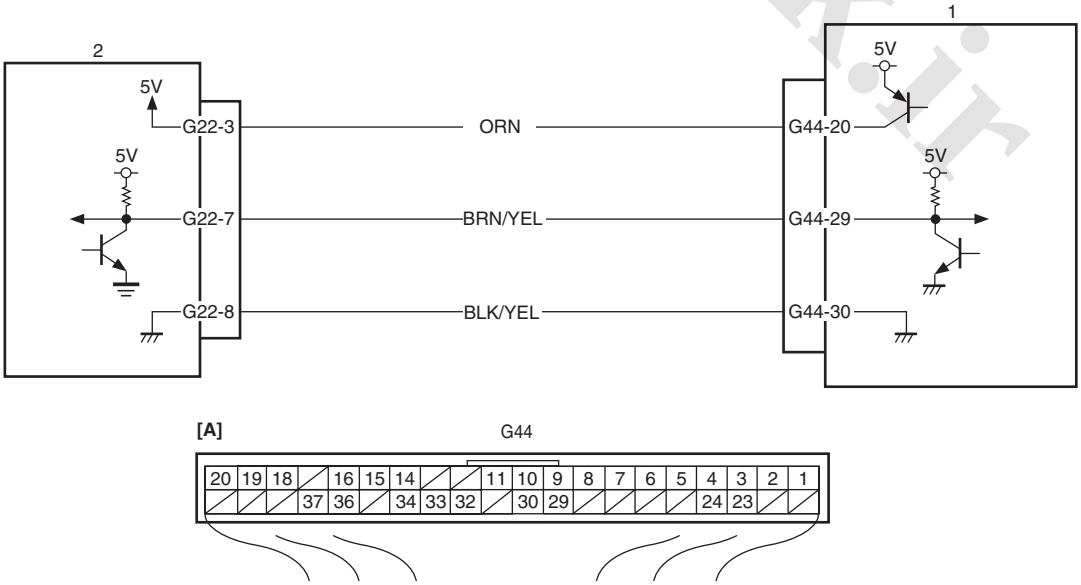


I5JB0AA50016-02

| | |
|---|---|
| [A]: Keyless start control module connector “G44” (viewed from harness side) | 2. Steering lock unit |
| 1. Keyless start control module | |

www.cargeek.ir

www.CarGeek.ir


**DTC Detecting condition and trouble area**

| DTC detecting condition | Trouble area |
|---|---|
| No communication is available between keyless start control module and steering lock unit | • Steering lock unit and its circuit<br>• Keyless start control module |

**DTC Confirmation Procedure**

1) Clear DTC referring to “DTC Clearance: ”.
2) Turn ignition knob switch pushing ignition knob switch.
3) Check DTC referring to “DTC Check: ”.

**Troubleshooting**

| Step | Action | Yes | No |
|---|---|---|---|
| 1 | *Was “Keyless Start System Check” performed?* | Go to Step 2. | Go to “Keyless Start System Check: ”. |
| 2 | **Steering lock unit circuit check**<br>1) Disconnect connector from keyless start control module.<br>2) Check for proper connection to “G44-20”, “G44-29” and “G44-30” terminals of keyless start control module connector.<br>3) If OK, check for open, short and high resistance in each circuit.<br>• Between “G22-3” terminal of steering lock unit connector and “G44-20” terminal of keyless start control module connector<br>• Between “G22-7” terminal of steering lock unit connector and “G44-29” terminal of keyless start control module connector<br>• Between “G22-8” terminal of steering lock unit connector and vehicle body ground<br>*Is each circuit in good condition?* | Go to Step 3. | Repair circuit. |
| 3 | **Steering lock unit power supply voltage check**<br>1) Connect connector to keyless start control module.<br>2) Measure voltage between “G22-3” terminal of steering lock unit connector and vehicle body ground.<br>*Is voltage 4 – 6 V?* | Replace steering lock unit. | Substitute a known-good keyless start control module and recheck. |

www.cargeek.ir

 www.CarGeek.ir

## DTC No. 13 / No. 14: Release Signal Error from Steering Lock Unit / Steering Lock Unit Malfunction

S5JB0AA504017

### DTC Detecting condition and trouble area

| DTC detecting condition | Trouble area |
|---|---|
| **DTC No. 13:**<br>Although lock release signal is output to steering lock unit, no lock release signal is inputted from steering lock unit.<br>(wire harness is normal)<br>**DTC No. 14:**<br>Although lock release signal is output to steering lock unit, steering lock is not released due to temperature rise of steering lock unit solenoid and no lock release signal is inputted.<br>(wire harness is normal) | • Steering lock unit |

### DTC Confirmation Procedure

1) Clear DTC referring to “DTC Clearance: ”.
2) Turn ignition knob switch pushing ignition knob switch.
3) Check DTC referring to “DTC Check: ”.

### Troubleshooting

Replace steering lock unit and recheck.

**NOTE**

**DTC No. 13 is also set is such case where the keyless start control module which was used in another vehicle is installed, the remote controller ID code is registered in it but the ignition key transponder code is not registered in ECM. Therefore, when DTC No. 13 is detected, register the ignition key transponder code in ECM before replacing the steering lock unit.**

## DTC No. 21 / No. 22: Internal Error of Keyless Start Control Module (EEPROM reading error) / (EEPROM writing error)

S5JB0AA504018

### DTC Detecting condition and trouble area

| DTC detecting condition | Trouble area |
|---|---|
| **DTC No. 21:**<br>Data cannot be read from memory in keyless start control module.<br>**DTC No. 22:**<br>Data cannot be written into memory in keyless start control module. | • Keyless start control module |

### DTC Confirmation Procedure

1) Clear DTC referring to “DTC Clearance: ”.
2) Turn ignition knob switch pushing ignition knob switch.
3) Push request switch of each door.
4) Check DTC referring to “DTC Check: ”.

### Troubleshooting

Substitute a known-good keyless start control module and recheck.

www.cargeek.ir

www.CarGeek.ir


## DTC No. 31: Lost Communication with BCM

S5JB0AA504019

### Wiring Diagram

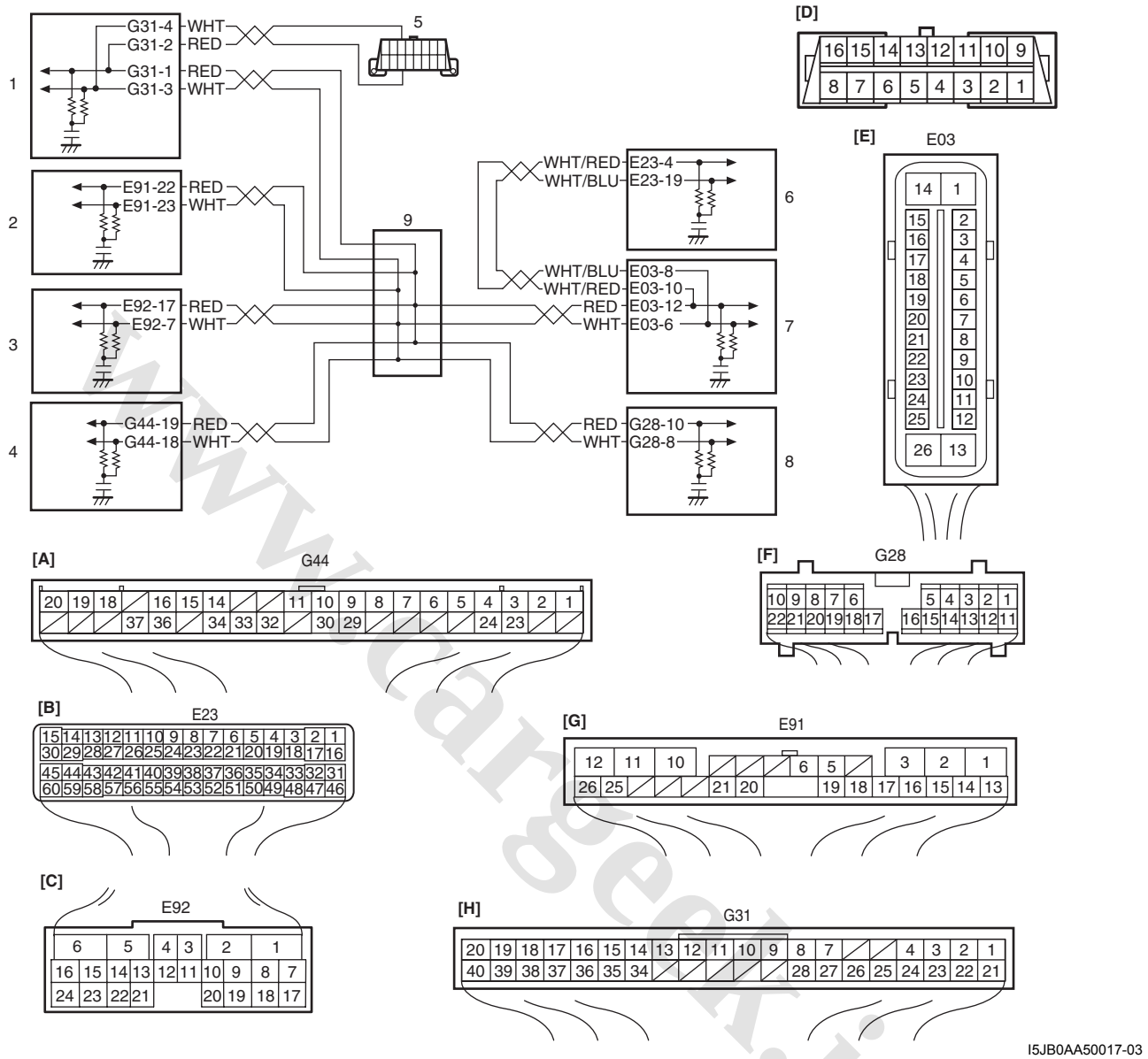


I5JB0AA50017-03

| | |
|---|---|
| [A]: Keyless start control module connector (viewed from harness side) | 1. BCM |
| [B]: ECM connector (viewed from harness side) | 2. 4WD control module (if equipped) |
| [C]: TCM connector (viewed from harness side) | 3. TCM (if equipped) |
| [D]: DLC (viewed from harness side) | 4. Keyless start control module |
| [E]: ABS hydraulic unit / control module connector (viewed from harness side) | 5. DLC |
| [F]: Combination meter connector (viewed from harness side) | 6. ECM |
| [G]: 4WD control module connector (viewed from harness side) | 7. ABS hydraulic unit / control module (if equipped) |
| [H]: BCM connector (viewed from harness side) | 8. Combination meter |
| | 9. Junction connector |

www.cargeek.ir

 www.CarGeek.ir

**DTC Detecting condition and trouble area**

| DTC detecting condition | Trouble area |
|---|---|
| Keyless start control module cannot receive data sent by CAN from BCM | • CAN communication circuit<br>• Keyless start control module<br>• BCM |

**DTC Confirmation Procedure**

1) Clear DTC referring to “DTC Clearance: ”.
2) Turn ignition key knob by pushing ignition key knob.
3) Check DTC referring to “DTC Check: ”.

**Troubleshooting**

| Step | Action | Yes | No |
|---|---|---|---|
| 1 | *Was “Keyless Start System Check” performed?* | Go to Step 2. | Go to “Keyless Start System Check: ”. |
| 2 | **DTC Check**<br>*Is DTC No. 33 detected?* | Go to “DTC No. 33: Control Module Communication Bus Off: ”. | Go to Step 3. |
| 3 | **DTC Check**<br>1) Check BCM for DTC referring to “DTC Check: in Section 10B”<br>*Is DTC U1073, DTC U1100 or DTC U1101 detected?* | Go to applicable DTC diag flow. | Go to Step 4. |
| 4 | **BCM power and ground circuit check**<br>1) Check BCM power and ground circuit for condition referring to “BCM Power Circuit and Ground Circuit Check: in Section 10B”.<br>*Is it in good condition?* | Go to Step 5. | Repair circuit. |
| 5 | **CAN communication circuit check**<br>1) Turn ignition switch to OFF position.<br>2) Disconnect connectors of all control modules communicating by means of CAN.<br>3) Check CAN communication circuit between keyless start control module and BCM for open, short and high resistance.<br>*Is CAN communication circuit in good condition?* | Go to Step 6. | Repair circuit. |
| 6 | **DTC check**<br>1) Connect connectors of all control modules communicating by means of CAN.<br>2) Check DTCs for ECM and TCM.<br>*Is DTC P1678 detected by ECM and DTC P1778 by TCM?* | Substitute a known-good BCM and recheck. | Substitute a known-good keyless start control module and recheck. |

www.cargeek.ir

www.CarGeek.ir


## DTC No. 33: Control Module Communication Bus Off

S5JB0AA504020

### Wiring Diagram

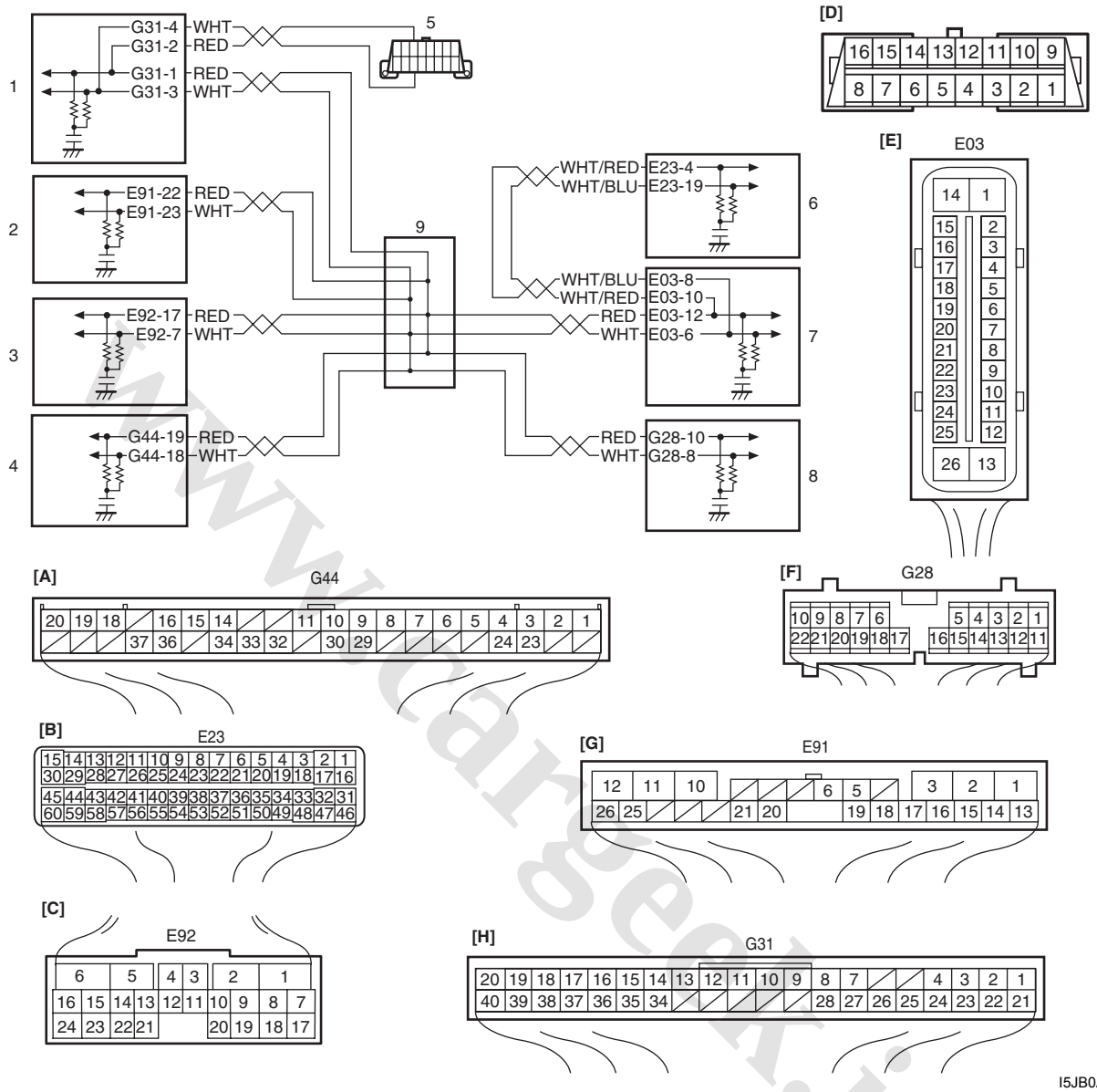


I5JB0AA50017-03

| | |
|---|---|
| [A]: Keyless start control module connector (viewed from harness side) | 1. BCM |
| [B]: ECM connector (viewed from harness side) | 2. 4WD control module (if equipped) |
| [C]: TCM connector (viewed from harness side) | 3. TCM (if equipped) |
| [D]: DLC (viewed from harness side) | 4. Keyless start control module |
| [E]: ABS hydraulic unit / control module connector (viewed from harness side) | 5. DLC |
| [F]: Combination meter connector (viewed from harness side) | 6. ECM |
| [G]: 4WD control module connector (viewed from harness side) | 7. ABS hydraulic unit / control module (if equipped) |
| [H]: BCM connector (viewed from harness side) | 8. Combination meter |
| | 9. Junction connector |

www.cargeek.ir

 www.CarGeek.ir

**DTC Detecting condition and trouble area**

| DTC detecting condition | Trouble area |
|---|---|
| Communication is not available with all control modules connected by CAN | • CAN communication circuit<br>• Combination meter<br>• Keyless start control module<br>• BCM<br>• 4WD control module (if equipped)<br>• ABS hydraulic unit / control module<br>• TCM (A/T model)<br>• ECM |

**DTC Confirmation Procedure**

1) Clear DTC referring to “DTC Clearance: ”.
2) Start engine and run it for 1 min. or more.
3) Check DTC referring to “DTC Check: ”.

**Troubleshooting**

| Step | Action | Yes | No |
|---|---|---|---|
| 1 | *Was “Keyless Start System Check” performed?* | Go to Step 2. | Go to “Keyless Start System Check: ”. |
| 2 | **Control module connector check**<br>1) Check connection of connectors of all control modules communicating by means of CAN.<br>2) Recheck DTC.<br>*Is DTC No. 33 detected?* | Go to Step 3. | Intermittent trouble. Check for intermittent referring to “Intermittent and Poor Connection Inspection: in Section 00”. |
| 3 | **CAN communication circuit check**<br>1) Turn ignition switch to OFF position.<br>2) Disconnect connectors of all control modules communicating by means of CAN.<br>3) Check CAN communication circuit between control modules for open, short and high resistance.<br>*Is each CAN communication circuit in good condition?* | Go to Step 4. | Repair circuit. |
| 4 | **DTC check**<br>1) Check DTC for BCM.<br>*Is DTC U1073 detected?* | Go to applicable DTC diag flow. | Go to Step 5. |

www.cargeek.ir

www.cargeek.ir

www.CarGeek.ir


| Step | Action | Yes | No |
|---|---|---|---|
| 5 | **DTC check**<br>1) Turn ignition switch to OFF position.<br>2) Connect connectors of disconnected control modules communicating by means of CAN.<br>3) Disconnect connector of any one control module other than keyless start control module and combination meter.<br>4) Recheck DTC for keyless start control module.<br>*Is DTC No.33 detected?* | Using same method, disconnect connectors of control module other than keyless start control module and combination meter one by one to check if DTC No.33 is detected.<br>If DTC No.33 is detected even though connector of control module other than keyless start control module and combination meter is disconnected, substitute a known-good keyless start control module and recheck. | Check power and ground circuit of disconnected control module. If circuit is OK, substitute a known-good disconnected control module and recheck. |

## DTC No. 51 / No. 52 / No. 53: Driver Side / Passenger Side / Rear End Door Request Switch Failure

S5JB0AA504021

### Wiring Diagram

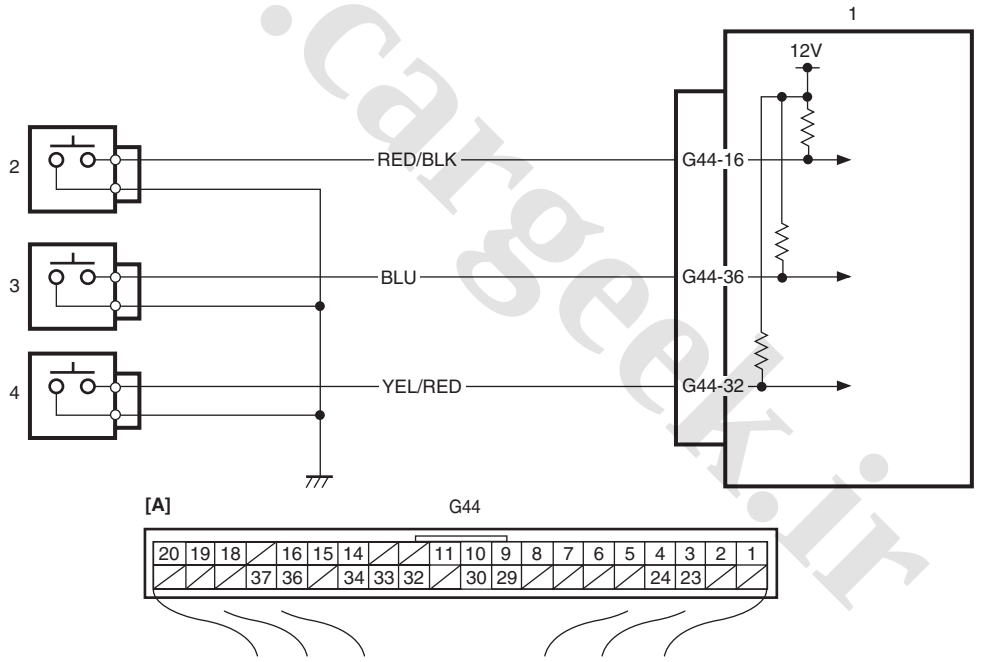


I5JB0AA50018-02

| | |
|---|---|
| [A]: Keyless start control module connector “G44” (viewed from harness side) | 3. Passenger side door request switch |
| 1. Keyless start control module | 4. Rear end door request switch |
| 2. Driver side door request switch | |

www.cargeek.ir

 www.CarGeek.ir

**DTC Detecting condition and trouble area**

| DTC detecting condition | Trouble area |
|---|---|
| **DTC No. 51:**<br>Input signal from driver side door request switch remains ON, unchanged for 10 minutes or longer.<br>**DTC No. 52:**<br>Input signal from passenger side door request switch remains ON, unchanged for 10 minutes or longer.<br>**DTC No. 53:**<br>Input signal from rear end door request switch remains ON, unchanged for 10 minutes or longer. | • Driver side door request switch and its circuit<br>• Passenger side door request switch and its circuit<br>• Rear end door request switch and its circuit<br>• Keyless start control module |

**DTC Confirmation Procedure**

1) Clear DTC referring to “DTC Clearance: ”.
2) Push request switch of each door.
3) Check DTC referring to “DTC Check: ”.

**Troubleshooting**

| Step | Action | Yes | No |
|---|---|---|---|
| 1 | *Was “Keyless Start System Check” performed?* | Go to Step 2. | Go to “Keyless Start System Check: ”. |
| 2 | **Keyless start control module voltage check**<br>1) Turn ignition switch to OFF position.<br>2) Disconnect connector from each door request switch.<br>3) Check for proper connection to all terminals of each door request switch connector.<br>4) If OK, measure voltage between “RED/BLK”, “BLU” or “YEL/RED” terminal of related door request switch connector and vehicle body ground.<br>*Is voltage 10 – 14 V?* | Go to Step 3. | Go to Step 4. |
| 3 | **Request switch check**<br>1) Check related door request switch for function referring to “Front Door (Driver and Passenger Side) Rear End Door Request Switch Inspection: ”.<br>*Is each switch in good condition?* | Check for open and high resistance in ground circuit of related door request switch. If ground circuit is OK, substitute a known-good keyless start control module and recheck. | Replace request switch. |
| 4 | **Wire harness check**<br>1) Disconnect connector from keyless start control module.<br>2) Check for open, short and high resistance in related circuit.<br>• Between “RED/BLK” terminal of driver side door request switch connector and “G44-16” terminal of keyless start control module connector<br>• Between “BLU” terminal of passenger side door request switch connector and “G44-36” terminal of keyless start control module connector<br>• Between “YEL/RED” terminal of rear end door request switch connector and “G44-32” terminal of keyless start control module connector<br>*Is it in good condition?* | Substitute a known-good keyless start control module and recheck. | Repair circuit. |

www.cargeek.ir

www.CarGeek.ir


# Repair Instructions

## Antennas and Request Switches Removal and Installation

S5JB0AA506001

Remove and install antennas and request switches referring to the following figures.

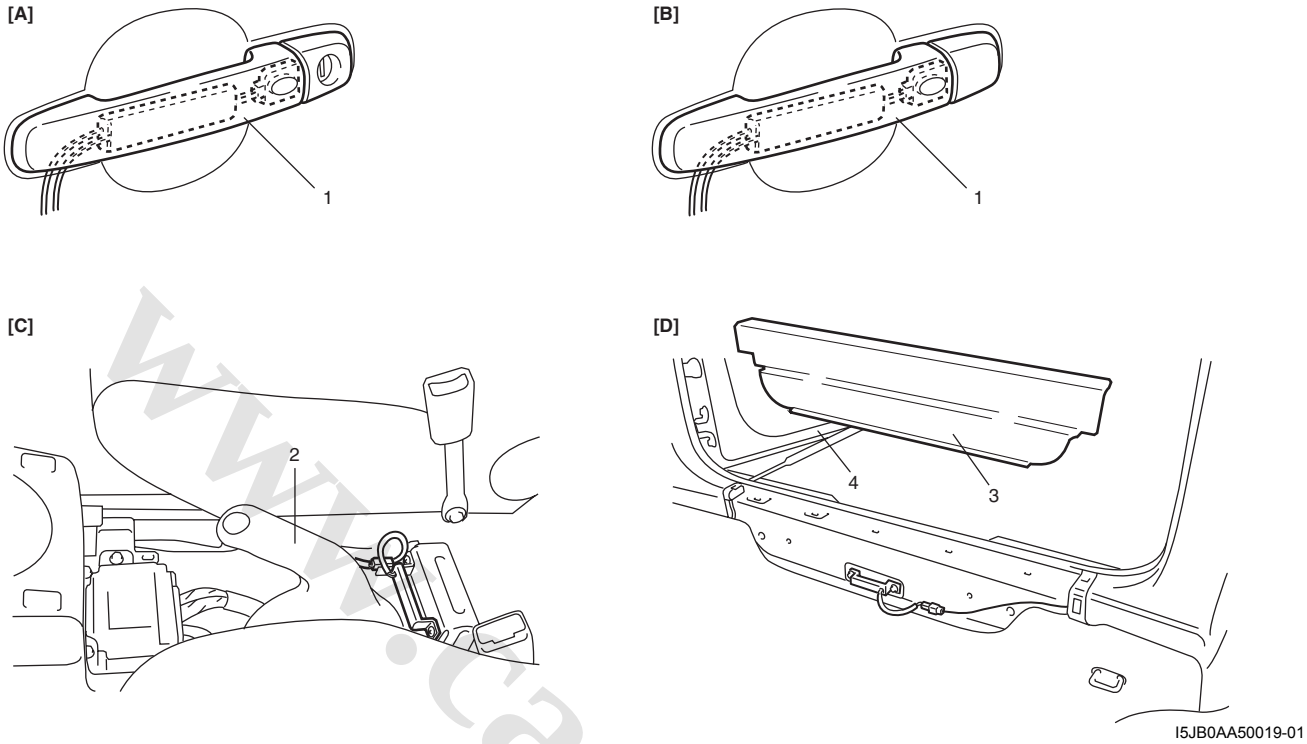


I5JB0AA50019-01

| | |
|---|---|
| [A]: Driver side door antenna and request switch (included in outside door handle assembly)<br>: Antenna and request switch can not be removed from outside door handle assembly | 1. Outside handle assembly |
| [B]: Passenger side or rear end door antenna and request switch (included in outside door handle assembly)<br>: Antenna and request switch can not be removed from outside door handle assembly | 2. Parking brake lever |
| [C]: Center antenna | 3. Tail end member trim |
| [D]: Luggage room antenna | 4. Rear and door |

www.cargeek.ir

www.CarGeek.ir

## Front Door (Driver and Passenger Side) Rear End Door Request Switch Inspection

S5JB0AA506002

1) Remove door trim from door panel.
   For front door trim, refer to Step 1) to 3) of “Front Door Glass Removal and Installation: in Section 9E”.
   For rear end door trim, refer to Step 1) of “Rear End Door Lock Assembly Removal and Installation: in Section 9F”.
2) Check for continuity between terminals “1” and “2” at each switch position as shown below. If check result is not as specified, replace.

   **Request switch (1) specification**
   **ON position (request switch pushed): Continuity**
   **OFF position (request switch released): No continuity**

I5JB0AA50020-01

| |
|---|
| 2. Outside handle |

## Steering Lock Unit Removal and Installation

S5JB0AA506003

For removal and installation, refer to “Steering Lock Assembly (Ignition Switch) Removal and Installation: in Section 6B”.

## Steering Lock Unit Inspection

S5JB0AA506004

Check key reminder switch and ignition knob switch in steering lock unit for operation referring to “Ignition Switch Inspection: in Section 9C”.

## Front Door Lock Switch Inspection

S5JB0AA506005

1) Remove door trim from door panel referring to Step 1) to 3) of “Front Door Glass Removal and Installation: in Section 9E”.
2) Check for continuity between terminals “1” and “2” at each switch position as shown below. If check result is not as specified, replace.

   **Door lock switch specification**
   **LOCK position: No continuity**
   **UNLOCK position: Continuity**

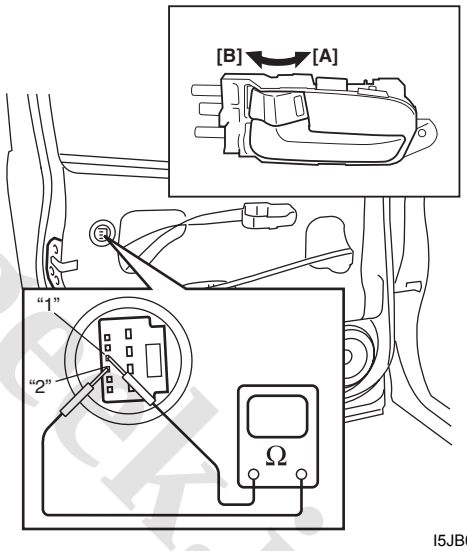


I5JB0AA50021-02

| | |
|---|---|
| [A]: Lock | [C]: Right side door lock switch |
| [B]: Unlock | [D]: Left side door lock switch |

www.cargeek.ir

www.CarGeek.ir


## Keyless start control module Removal and Installation

S5JB0AA506006

### Removal

1) Disconnect negative cable at battery.
2) Remove glove box from instrument panel.
3) Disconnect connector from keyless start control module (1).
4) Remove keyless start control module mounting bolt (2) and then remove keyless start control module with its bracket from steering support member.

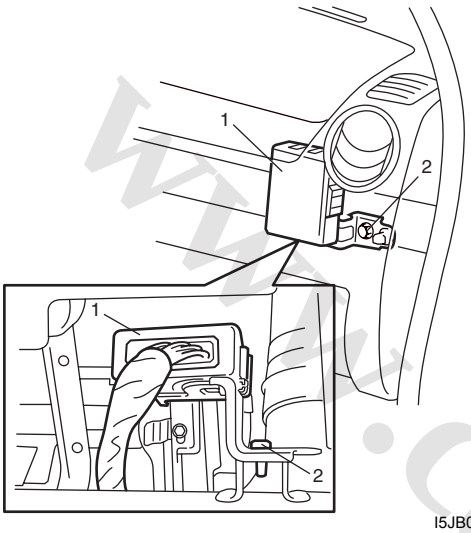


I5JB0AA50022-01

### Installation

For installation, reverse removal procedure.
If Keyless start control module is replaced, register ID code of remote controller into Keyless start control module, referring to “Registration Procedure for Remote Controller ID Code: ”.

## Remote Controller Inspection

S5JB0AA506007

Check that remote controller operation indicator lamp (3) lights up when lock (1) or unlock (2) button of remote controller is pushed.
If it doesn’t light up in this check, replace battery and then recheck. If it doesn’t light up even after battery replacement, replace remote controller.

**NOTE**

**When remote controller transmits lock or unlock signal, it makes operation indicator lamp light up.**

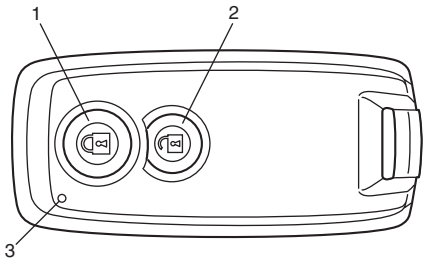


I4RS0BA50031-01

## Replacement of Remote Controller Battery

S5JB0AA506008

If remote controller operation indicator lamp fails to light up when lock or unlock button of remote controller is pushed, replace its battery as follows.

1) If ignition key (1) is inserted in remote controller, remove it.
2) With tip of flat blade screwdriver (2) put in slot (3) of remote controller (4), pry it open.

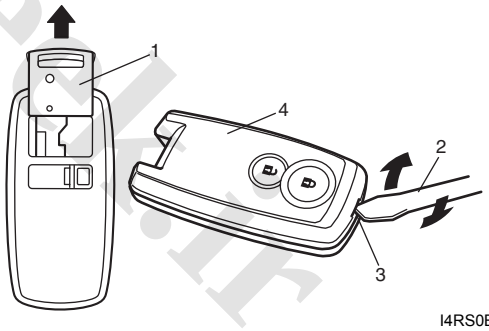


I4RS0BA50032-01

www.cargeek.ir

www.CarGeek.ir

3) Remove battery (4) from lower case (5).

⚠ **CAUTION**

**Use care not to allow grease or dirt to be attached on the printed circuit board and the battery.**

4) Replace the battery (lithium disc-type CR 2032 or equivalent battery) so its (+) terminal faces on remote controller lower case.

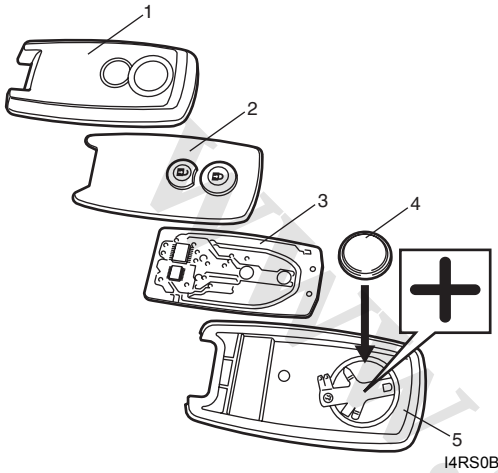

I4RS0BA50033-01

| | |
|---|---|
| 1. Upper case<br>2. Rubber switch | 3. Printed circuit board |

5) Install printed circuit board and rubber switch to upper case and then fit lower case securely.

**NOTE**

- **To prevent theft, be sure to break the remote controller before discarding it.**
- **Dispose of the used battery properly according to applicable rules or regulations. Do not dispose of lithium batteries with ordinary household trash.**

## Registration Procedure for Remote Controller ID Code

S5JB0AA506009

**NOTE**

- **It is possible to register up to 4 remote controllers in keyless start control module.**
- **Setting keyless start control module to ID code registration mode of remote controller will erase all remote controller ID codes that have been registered in keyless start control module.**
  **Therefore, when registering remote controller ID codes in keyless start control module, have all of those to be registered ready and execute their registration at the same time.**
- **When registration of more than four remote controller ID codes is attempted, the oldest remote controller ID code will be erased and that inputted after the fourth one will be registered.**
- **When keyless start control module which was used in another vehicle has been installed, it is necessary to perform both registration of remote controller ID code in keyless start control module and registration of ignition key transponder code in ECM. For registration procedure of ignition key transponder code, refer to "Registration of the Ignition Key: in Section 10C".**

www.cargeek.ir

www.CarGeek.ir


If remote controller or keyless start control module is replaced with a new one or additional remote controller is necessary, register ID code(s) of remote controller.

1) Sit in driver seat and close all doors.
2) Check that door lock of driver seat is unlocked.
3) Insert ignition key (1) into ignition key cylinder.
4) Perform Steps a) through f) described below within 25 seconds after Step 3).
   a) First push manual door lock switch (2) toward lock side (3) and then push it toward unlock side (4).
   b) Repeat Step a) 2 more times.
   c) Push lock side of manual door lock switch.
   d) Remove ignition key from ignition key cylinder once and then insert it again.
   e) Repeat Step d) 3 more times.
   f) Start engine and wait for 3 seconds.

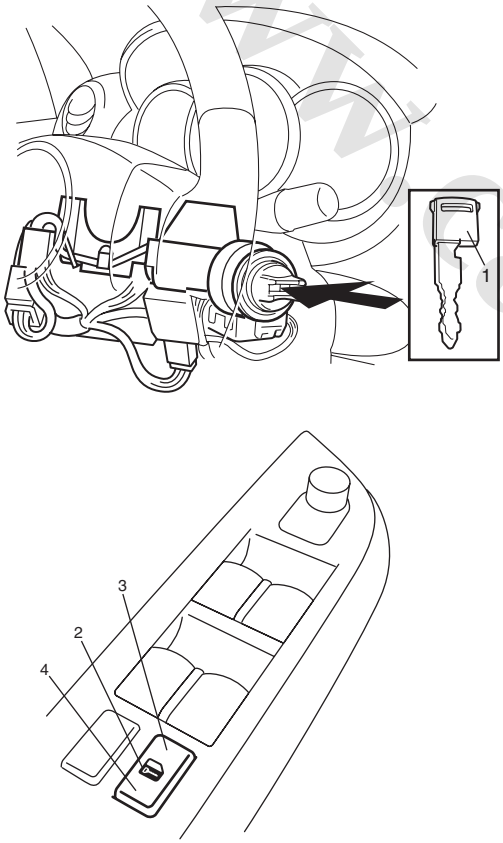

I5JB0AA50023-03

**NOTE**

**When 60 seconds elapse after engine is started, the above process to enter registration mode will be cancelled. Therefore, be sure to proceed to the next step within 60 seconds.**

5) Turn ignition switch to OFF position.
   When ignition switch is turned to OFF position, buzzer sounds twice and door lock is activated from lock position to unlock position. This operation indicates that keyless start control module has entered registration mode.
6) Push lock or unlock button of remote controller within 30 seconds after Step 5) to be registered.
   When lock or unlock button of remote controller is pushed, buzzer sounds twice, door lock is activated to lock position and then to unlock position. This operation indicates that remote controller ID code has been registered in keyless start control module. If an additional remote controller needs to be registered, repeat the procedure of Step 6) within 30 seconds after Step 5).
7) To end registration mode, remove ignition key from ignition key cylinder or turn it to ON position.
   If engine start function of keyless start system does not work after registration, check ECM if DTC P1615 is detected. If it is detected, go to “DTC P1615: Steering Lock Unit Communication Error (for Vehicle with Keyless Start System): in Section 10C”. If it is not detected, perform registration procedure again.

www.cargeek.ir

www.CarGeek.ir

Prepared by

**SUZUKI MOTOR CORPORATION**

1st Ed. Apr., 2005

www.cargeek.ir

www.cargeek.ir

www.CarGeek.ir

34.4 mm

SUZUKI GRAND VITARA

SERVICE MANUAL

99500-64J00-01E

SUZUKI MOTOR CORPORATION

VOL.
1 OF 2

SUZUKI

# GRAND VITARA

# SERVICE MANUAL

## JB416/JB420

## VOLUME 1 OF 2

SUZUKI
Caring for Customers

99500-64J00-01E
(英)

www.cargeek.ir

www.CarGeek.ir

35.5 mm

SUZUKI GRAND VITARA

SERVICE MANUAL

99500-64J00-01E

SUZUKI MOTOR CORPORATION

VOL.
2 OF 2

SUZUKI

# GRAND VITARA

# SERVICE MANUAL

## JB416 / JB420

## VOLUME 2 OF 2

SUZUKI
Caring for Customers

99500-64J00-01E
（英）

www.cargeek.ir